City of Biddeford
Finance Committee

November 18, 2025 at 5:00 PM
City Hall Council Chambers & Zoom

Click to Join Zoom Meeting Online
Or call in by phone: +1 312 626 6799
Meeting ID: 915 0884 8882
Passcode:138115

1. Call to Order
2. Approval of Minutes
   - 2.a Finance Committee Minutes 11.06.25
3. Signing of the Expenditure Warrant
4. Discussion/Approval
   - 4.a Tabled — Approval / Fire Department Marine Unit Bid
   - 4.b Sole Source Procurement Authorization- Used FD Marine Unit
   - 4.c Approval / Sole Source Procurement Authorization – Purchase Used Marine Unit for the Fire Department
   - 4.d Lincoln Street Force Main Valve Vault
5. Other Business
   - 5.a FY26 Period 5 YTD Report
6. Adjourn

City of Biddeford
Finance Committee
November 6, 2025 5:00 PM Council Chambers & Zoom

Councilor Beaupre: Present
Councilor Lessard: Present
Councilor LaFountain: Present
Grohman: Present

1. Call to order

2. Approval of the Minutes

Approved
Beaupre - First
Lessard - Second
Unanimous

3. Signing of the expenditure warrant

None

4. Discussion/Approval

4.a 2025.153 Approval / Fire Department Marine Unit Bid and Sale/Auction of two (2) Marine Units

Chief Best – Discuss marine unit replacement through CIP process. Request to trade in 1963 boat and 1996 boat. Replace two boats with one. Two bids for new boats. Award it to Zodiac North America. $128,500 for boat. Budget is $80k last year from the Shellfish Commission Fund. Received grant for $45k from the Stephen and Tabith King grant. Funds received for trade in would help pay for the boats or whatever the Council approves to do with the funds. It would go to marine services for maintenance not PW Fleet service.

Lessard – Suggesting different similar used boats for savings.
Beaupre – Asked about a particular boat that was in service previously.
Grohman – Asked about type of boat.

Grohman – First
LaFountain – Second
Lessard – Table to go through used boats until next meeting
Beaupre – Second
Tabled 3-1. Grohman opposed.

5. Other Business

Lessard thanking City Manager for putting PW information on website and asking if salt has been purchased.

6. Adjourn

First: Beaupre
Second: Lessard
Unanimous

Finance Committee

Meeting Date: November 18, 2025
Meeting Time: 5:00 PM
Agenda Item No: 4.a
Item Description: Tabled — Approval / Fire Department Marine Unit Bid
Submitted By: Lawrence D. Best, Fire Chief

Key Terms:
Approval / Fire Department Marine Unit Bid and Sale/Auction of two (2) Marine Units

Executive Summary:
This item was tabled by the Finance Committee on November 6, 2025.

Note: The recommended bid price is valid for 90 days from the date quote which is September 11, 2025.

Part 1 — Bid Award:

Pursuant to the current City Purchasing Policy Sec. 2-348 (g) (3)... All bids over $50,000 and up to $150,000 regardless of budget status or bid ranking shall be submitted to the Finance Committee for review and approval prior to award.

In August of this year, the Fire Department sent out a Request for Bids (RFB) for a new 19'-22' Center Console Rigid Hull Inflatable Type Marine Unit. The bids closed on September 24, 2025 at 4:00pm. The goal of this project is to replace the two (2) Fire Department Marine Units with one (1) Marine Unit that will be housed on a trailer and can be deployed for rescue operations both above and below the dam.

There were two (2) companies that submitted bids for a total of three (3) boats ranging in cost from $100,983.00 to $132,937.00. The first bid was from Ribcraft USA, LLC in the amount of $100,983.00 for a Ribcraft 5.85, 19'4" boat with a 115HP motor. The second bid was from Ribcraft USA, LLC in the amount of $132,937.00 for a Ribcraft 6.5, 21'5" boat with a 150HP motor. The third bid was from Zodiac North America in the amount of $128,500.00 for a Zodiac Milpro SRR 650, 21'11" boat with a 150HP Motor.

After reviewing the bids and specifications for each boat, it was determined that the Zodiac SRR 650 boat is the unit that best fits the Fire Department's needs, and is the recommendation for award of the bid. The method of tube attachment to the hull is a better method; it has a slightly wider beam, and it includes all the electronics which Ribcraft did not. Because Ribcraft did not include the electronics, this would be an added expense to purchase and install after either of the Ribcraft boats were received.

The Zodiac SRR 650 bid cost is $128,500.00, which is $3,500.00 more than the available funds for this CIP purchase.

Detailed Review:

The Fire Department is requesting approval to award the bid for a new Marine Unit

In August of this year, the Fire Department sent out an RFB for a new 19'-22' Center Console Rigid Hull Inflatable Type Marine Unit. The bids closed on September 24, 2025, at 4:00pm. The goal of this project is to replace the two (2) Fire Department Marine Units with one (1) Marine Unit that will be housed on a trailer and can be deployed for rescue operations both above and below the dam.

There were two (2) companies that submitted bids for a total of three (3) boats ranging in cost from $100,983.00 to $132,937.00. The first bid was from Ribcraft USA, LLC in the amount of $100,983.00 for a Ribcraft 5.85, 19'4" boat with a 115HP motor. The second bid was from Ribcraft USA, LLC in the amount of $132,937.00 for a Ribcraft 6.5, 21'5" boat with a 150HP motor. The third bid was from Zodiac North America Inc. in the amount of $128,500.00 for a Zodiac Milpro SRR 650, 21'11" boat with a 150HP Motor.

After reviewing the bids and specs for each boat, it was determined the Zodiac SRR 650 boat is the unit that best fits the Fire Department's needs and is the recommendation for award of the bid. The method of tube attachment to the hull is a better method; it has a slightly wider beam, and it includes all the electronics which Ribcraft did not. Because Ribcraft did not include the electronics, this would be an added expense to purchase and install after either of the Ribcraft boats were received.

The Zodiac SRR 650 bid cost is $128,500.00, which is $3,500.00 more than the available funds for this CIP purchase.

Background/History:

Through the FY26 CIP process, the Fire Department requested funding to replace the existing 1963, 62-year-old aluminum boat that does not meet the safety and rescue needs for our current water conditions. The 1963 aluminum boat is not stable enough or designed to allow rescuers the ability to pull patients/victims from the water into the boat. On average, the BFD responds to 12 incidents annually that necessitate the response of a marine unit. The estimated

budget cost obtained in 2024 for this project was $80,000.00. This CIP request was approved on recommendation by the Acting City Manager. The Capital Projects Committee met on June 11th to review and make allocation recommendations for the FY 26 CIP and again on August 13th to review and approve the allocation of the balance of the funds. On September 2nd, the City Council voted to approve the recommendations made by the Capital Projects Committee which included this new Marine Unit.

After the budget process was completed, the Fire Department successfully submitted and received a grant from the Stephen and Tabitha King Foundation in the amount of $45,000.00 to help with funding for this project. This grant of $45,000.00 was accepted by the City Council on July 15th. The funding source for the $80,000.00 that was included in the budgeting process was decided to be from the Mooring Fund Surplus (Fund 202). The combined total available funds are $125,000.00.

In addition to these available funds, the Fire Department will be requesting approval from the City Council to auction/sell the current 1963 Aluminum Marine 202 unit and trailer, which is valued at an estimated $3,365.00 - $3,790.00 and a second Marine unit, which is a 1996 20-foot Boston Whaler and trailer which is valued at an estimated $19,000 - $21,515.00. The goal would be to have funds from the sale of these boats cover the additional $3,500.00 cost above the $125,000.00 available with the remainder of the sale funds going back into the Mooring Fund Surplus (Fund 202) or other account as deemed appropriate by the City Council.

The June 11th meeting materials, including meeting video and supporting documentation, are available via this link (Capital Projects/Operations Committee (LIVE) • Agendas and Minutes - City of Biddeford, ME • CivicClerk). The August 13th meeting materials, including meeting video and supporting documentation, are available via this link (Capital Projects / Operations Committeee Meeting (Live) • Agendas and Minutes - City of Biddeford, ME • CivicClerk). The City Council approved this CIP project on September 2, 2025, (City Council Meeting (Live) • Agendas and Minutes - City of Biddeford, ME • CivicClerk).

An earlier Capital Projects / Operations Committee Meeting occurred in May to present the FY26 CIP requests. The May meeting materials, including meeting video and supporting documentation, are available via this link (Capital Projects / Operations Committeee Meeting (Live) • Agendas and Minutes - City of Biddeford, ME • CivicClerk).

Funding Source:

A total of $128,500.00 is requested for this CIP project. $80,000.00 will come from the Mooring Fund Surplus (Fund 202), which has a balance of $131,889.17 for this CIP project through the FY26 CIP Budget process. $45,000.00 will come from the Stephen and Tabitha King foundation, and it is requested that $3,500.00 be funded from the Mooring Fund Surplus (Fund 202) and be replenished with funds from the sale of the two (2) current FD Marine Units.

Staff Recommendation:

Staff recommends the approval of the bid to Zodiac of North America Inc. for the SRR 650 Marine Unit at the bid cost of $128,500.00 and to approve the sale/auction the two (2) Marine units; 1. 1963 Crestliner 16' aluminum boat with 25hp outboard motor and trailer, hull # SN 0R668866, Model# 1A2531EK; estimated value $3,365.00 — $3,790.00. 2. 1996 Boston Whaler 20' boat with 125hp outboard motor and trailer, hull # SN 2B231909, Model # 1225P83BD; estimated value $19,000.00 — $21,515.00.

Next Steps:

Upon approval, staff will begin the process to advertise and sell/auction the two (2) Marine Units.

Attachments:

1. Bid #1 Ribcraft option A
2. Bid #2 Ribcraft option B
3. Bid #3 Zodiac
4. FY26 Capital Projects - Operations Committee Recommendation No. 1 Summary
5. FY26 Captial Approval Document
6. FY26 CIP Marine Unit 202 Replacement

RIBCRAFT USA, LLC
88 Hoods Lane, PO Box 463
Marblehead, MA 01945
t. 781.639.9065 f. 781.639.9062
toll free. 866 RIBS USA
www.ribcraftusa.com

COPY

PROPOSAL OPTION A

September 22, 2025

City of Biddeford Fire Department
152 Alfred Street
Biddeford, ME 04005
Attn: Assistant

RE: RFP – Supply and Delivery of a Fire Department Emergency Response Boat

On behalf of RIBCRAFT USA, LLC, I am pleased to provide you with the following proposal for one (1) RIBCRAFT 5.85 with all specified options and equipment in response to RFP – Supply and Delivery of a Fire Department Emergency Response Boat, dated August 20, 2025.

The RIBCRAFT 5.85 is built to the highest commercial grade specifications and standards resulting in remarkably solid, well performing, and safe rigid inflatable boat (RIB). As the manufacturer of the above stated boat, this boat meets the requirements put forth by the City of Biddeford Fire Department.

Please find enclosed the following documents:

- Completed & Signed Bid Documents
- Bidder Response Supplement
- Detailed RIBCRAFT Quote
- RIBCRAFT Brochure

With safety and reliability at the core of all RIBCRAFT designs, the RIBCRAFT 5.85 features a deep V hull, full-length spray rails, high bow sheer, and a heavy-duty multi chambered Hypalon tube. To insure the utmost in durability and strength all hulls are solid fiberglass with an internal composite stringer system.

For almost twenty-five years, safety and rescue professionals have come to expect the most in quality, dependability and service from RIBCRAFT and our line of professional grade rigid inflatable boats (RIBs). Constructed by skilled craftsmen in the United States (Massachusetts), every boat is built with the understanding that it will receive hard, offshore 24/7 commercial use.

Many thanks in advance for your time and consideration.

Kelly Marie

RIBCRAFT USA, LLC

ATTACHMENT A:

REFERENCE FORM

Bidder: RIBCRAFT USA, LLC

RFB Title: The Supply, and Delivery of a Fire Department Emergencry Response Boat

Bidder must provide references for:

All current contracts under which the vendor's equipment has been operational for at least two years.

Reference: Kennebunk Harbormaster Contact: Jamie Houtz
Address: 1 Summer Street Kennebunk, ME 04043 Phone: 207-985-7976
Fax: harbormaster@kennebunkmaine.us
Description and date(s) of supplies or services provided: RIBCRAFT built and delivered a RIBCRAFT 5.85 to the Kennebunk Harbormaster in March of 2023. The boat had a smiliar layout with a center console, T-top, red tube with boarding wear patches and grab handles, and a 115HP outboard.

Reference: Boston Fire Department Contact: Ed McCarthy
Address: 115 South Hampton Street Boston, MA 02118 Phone: 617-828-3978
Fax: edward.mccarthy@boston.gov
Description and date(s) of supplies or services provided: RIBCRAFT built and delivered a RIBCRAFT 5.85 to the Boston Fire Department in April of 2020. RIBCRAFT worked with the Chief to understand their operational requirements and built a boat that meets all of their demands - a reliable response boat to be used on the Charles River and Boston Harbor.

Reference: Maine Marine Patrol Contact: Steve Ingram
Address: 21 State House Station Augusta, ME 04333 Phone: 207-624-7338
Fax: steve.ingram@maine.gov
Description and date(s) of supplies or services provided: RIBCRAFT has built and delivered numerous RIBCRAFT 4.8 boats to the Maine Marine Patrol. The RIBs are onboard MMP's larger patrol boats and a favorite among the officers and the most used boats in the fleet.

attach additional sheets if necessary

ATTACHMENT B: BID FORM

The undersigned BIDDER proposes and agrees, if the Bid is accepted to enter into an Agreement with the City, to complete all work as specified or indicated in the "REQUEST TO BID: for the supply, delivery of a FIRE DEPARTMENT EMERGENCY RESPONSE BOAT and TRAILER, exactly as outlined and detailed in this bid.

Bid Price: One hundred thousand nine hundred eighty three **dollars ($** 100,983.00 **)**

BIDDER accepts all the terms and conditions of the Instructions to Bidders.

In submitting this Bid, BIDDER represents, as more fully set forth in the Agreement, that: BIDDER has examined copies of all the Contract Documents **and of the following Addenda**:

Date N/A Number N/A
Date Number

BIDDER shall submit an itemized list of costs including vessel accessories, attachments, trailer and delivery as outlined in this bid.

BIDDER agrees that Prevailing Wage Rates if applicable will be paid for the appropriate classification of work.

The undersigned certifies under penalties of perjury that this Bid is in all respects bona fide, fair and made without collusion or fraud with any other person. As used in this paragraph, the word "person" shall mean any natural person, joint venture, partnership, corporation or other business or legal entity.

Signed: Print Name: Kelly Marie

Company: RIBCRAFT USA, LLC

Business Address: 88 Hoods Lane

Marblehead, MA 01945

Email: kmarie@ribcraftusa.com

FAX:

RIBCRAFT USA, LLC
88 Hoods Lane, PO Box 463
Marblehead, MA 01945
t. 781.639.9065 f. 781.639.9062
toll free. 866 RIBS USA
www.ribcraftusa.com

? ~~Coat~~
Galvanize Trailer ?
115 hp

PROPOSAL OPTION A

BIDDER RESPONSE SUPPLEMENT

Proposal for RFP – Supply and Delivery of a Fire Department Emergency Response Boat

CERTIFICATIONS / MANUFACTURERS EXPERIENCE:

RIBCRAFT hereby certifies that the proposed 2026 19'4" RIBCRAFT 5.85 rigid inflatable boat and additional items related hereto are compliant with the technical specifications contained in the Invitation For Bid dated August 20, 2025 for RFP – Fire Department Emergency Response Boat. Such compliancy includes, but is not limited to, design, construction, performance, durability, and warranty except where indicated.

The proposed RIBCRAFT 5.85 Rigid Inflatable Boat is designed, built and tested in accordance with the American Boat & Yacht Council's quality technical practices and engineering standards for the design, construction and safety of small craft. The boat will be equipped and configured as specified in the bid package and shall meet all necessary requirements.

EXPERIENCE / CREDENTIALS

Headquartered in Marblehead, Massachusetts, RIBCRAFT designs and builds safe, durable, performance oriented rigid inflatable boats (RIBs) that fulfill the most demanding professional applications. For nearly 25 years, RIBCRAFT has built professional grade RIBs and inflatables in the United States for military applications, law enforcement agencies, safety professionals, and private industry. The RIBCRAFT model line ranges in size from 14 to 42 feet.

Since inception in 2001, RIBCRAFT USA, LLC has developed one of the strongest and most recognized brands in the rigid inflatable boat market. RIBCRAFT focuses on government and commercial users who comprise 85% of the company's revenues.

Every RIBCRAFT is built to customer-defined specifications following a detailed design process, including not only powering options and color schemes but also general arrangement, electrical packages, and myriad customer-specific equipment configurations. The RIBCRAFT team is comprised of marine professionals experienced in and passionate about designing and building RIBs that meet and exceed customer expectations and mission requirements.

Incorporating a conventional solid fiberglass hull with an inflatable tube for increased buoyancy, stability, and overall performance RIBCRAFT builds professional grade rigid

inflatable boats ranging in size from 14' to 42' that fulfill a variety of missions from patrol and rescue to interdiction and military operations. Every boat is built to industry recognized standards featuring commercial grade fiberglass hulls and heavy duty multi-chambered air tubes. Designed for professional applications, a RIBCRAFT RIB with a deep V hull and heavy duty tube provides unparalleled performance regardless of the sea conditions.

RIBCRAFT supplies the United States Navy with the standard 7 Meter shipboard RIB and the 11 Meter Expeditionary RIB. Additionally, RIBCRAFT supplies commercial grade boats to the US Air Force, US Fish & Wildlife, state and local law enforcement agencies, fire departments, and industry (profit & non-profit).

REFERENCES:

As requested, RIBCRAFT has built Fire and Rescue Boats for the following agencies in recent years:

Kennebunk Harbormaster
1 Summer Street
Kennebunk, ME 04043
Jamie Houtz
harbormaster@kennebunkmaine.us
207-985-7976

Boston Fire Department
115 South Hampton Street
Boston, MA 02118
Ed McCarthy
Edward.mccarthy@boston.gov
617-828-3978

Maine Marine Patrol
21 State House Station
Augusta, ME 04333
Steve Ingram
Steve.ingram@maine.gov
207-624-7338

Portsmouth Fire Department
170 Court Street
Portsmouth, NH 03801
John Goodwin
jwgoodwin@cityofportsmouth.com
603-944-7920

BOAT SPECIFICATIONS:

Based on the invitation for bid and the estimated referenced value, RIBCRAFT hereby proposes the RIBCRAFT 5.85 as a rescue boat for the City of Biddeford. The RIBCRAFT 5.85 Rigid Inflatable Boat specifications are as indicated below and as illustrated in the attached RIBCRAFT 5.85 Specification Marketing Sheet.

LOA:	19'4"
Beam:	8'
Internal Length:	14'9"
Internal Beam:	5'1"
Weight:	1,200 – 1,700 lbs (without engine)

The proposed 2026 RIBCRAFT 5.85 features a commercial grade fiberglass deep V hull with a heavy duty 1670 dtx red Hypalon tube with five air chambers each with pressure relief valves, a pair of boarding wear patches and a pair of tube grab handles. The boat is configured with a center console with front bench seat, full size windscreen, leaning post with backrest, footrest and storage, a t-top with aluminum hard top, antenna arch with integrated dive ladder, LED navigation and flood lights, a 115HP Mercury four stroke outboard engine, a bunk trailer and all other features and options as specified in the Scope of Services.

Please see the enclosed Detailed Quote and Drawing for the quoted configuration which outlines all features and options included.

The RIBCRAFT 5.85 meets the requirements and specifications for the boat and engine as outlined in the RFP August 20, 2025.

Length/Measurements
The RIBCRAFT 5.85 at 19'4" as proposed is fully compliant with the specifications as noted above and in the Scope of Services.

Hull Construction
The RIBCRAFT 5.85 as proposed is fully compliant with the features outlined. Featuring a heavy duty commercial grade solid fiberglass (FRP) hull, the 5.85 also includes an internal longitudinal and transverse composite stringer system, full length lifting strakes, underdeck wire conduits, and a molded non-skid deck with removal deck panels for below deck access. There is no wood in the vessel's construction.

Tube Construction
The RIBCRAFT 5.85 features all tube accessories as outlined and is fully compliant. The RIBCRAFT 5.85 features a semi-active heavy duty multi chambered (five (5) chambers) 1670 dtx Hypalon tube. To insure the utmost in strength and reliability, all seams are triple bonded (overlapped with internal and external seam tapes), the tube is permanently bonded to the hull, and each chamber features pressure relief valves to prevent over inflation or blow outs. Additionally, every tube features a high profile rubstrake which is 1.25" high by 5" wide.

Layout
The RIBCRAFT 5.85 features all accessories as outlined and is fully compliant. All of the required features are included as indicated in the enclosed itemized RIBCRAFT 5.85 Quote. Of critical importance, the proposed 5.85 features a center console with front bench seat, leaning post, T-top, and an antenna arch with integrated folding dive ladder.

Engine
The proposed RIBCRAFT 5.85 features a single 115HP Mercury four stroke engine complete with digital controls, gauges, and propeller. The engine is equipped with hydraulic steering and the transom height is 25". The engine is directly mounted to the transom.

Electrical/Electronics
The RIBCRAFT 5.85 features all electronics as outlined and is fully compliant. All wiring and electrical installations will meet or exceed ABYC standards. All of the required features are included as indicated in the enclosed itemized RIBCRAFT 5.85 Detailed Quote.

Trailer
RIBCRAFT has proposed a dual axle heavy duty bunk trailer. Galv.?

WARRANTIES

All warranty items are as specified in RIBCRAFT's standard commercial warranty. RIBCRAFT warrants the boat (hull and tube) for one year from date of purchase. Components and accessories not manufactured by RIBCRAFT receive the warranty provided by the original equipment manufacturer. The manufacturer of the Mercury engine offers a one year warranty for commercial users.

DELIVERY

Currently, delivery for one new RIBCRAFT 5.85 as specified is estimated at approximately one hundred eighty (180) days from date of award of contract. RIBCRAFT will deliver the boat to Biddeford, ME upon completion at no charge.

SERVICE & SUPPORT

As a manufacturer located in New England, RIBCRAFT is uniquely positioned to provide direct factory service and support. RIBCRAFT guarantees the continuing availability of Logistical Support (i.e. spares and other technical services) for a minimum of 10 years from time of delivery. As required, RIBCRAFT is happy to provide needed service support either directly through a RIBCRAFT factory service technician or a factory approved service center within the vessels' operation area. Given the proximity to Maine, RIBCRAFT's capability to provide service and support is paramount and allows you to work directly with the manufacturer, much like the Kennebunk Harbormaster, Portsmouth Fire, Boston Fire and Maine Marine Patrol have experienced.

RIBCRAFT will provide complete COTs Operation and Maintenance Manuals with complete third party manuals for all electronics and significant mechanical items (engine). As requested, RIBCRAFT will provide instruction and technical manuals.

PRICING

The quoted price for the RIBCRAFT 5.85 and trailer as specified per the RFP is $100,983.00. RIBCRAFT will deliver the completed boat, engine and trailer to Biddeford at no charge. A complete pricing detail is provided in the enclosed Detailed Quote.

RIBCRAFT
PO Box 463, Marblehead, MA 01945
t. 781.639.9065 f. 781.639.9062
www.ribcraftusa.com

QUOTE

Date	Delivery	Contact
9/22/25	TBD	Kelly M
Model	**Hull #:**	**Rev.**
5.85		
Ref:		

To: Biddeford Fire Department
Ken Thorpe
152 Alred Street
Biddeford, ME 04005

Phone:
Email: kenneth.thorpe@biddefordmaine.org

1	**2026 RIBCRAFT 5.85 PROFESSIONAL - Outboard Engine Configuration** **Base Boat** includes Center Console with Front Bench Seat and S/S Grab Handle, Access Hatches, Leaning Post, Cable Steering, Anchor Locker, Bow Eye, Bow Cleat, Two (2) Stern Tie Down Eyes, Six (6) Switch Electrical Panel, Battery, Battery Switch, Navigation Lights, Compass, Electric Bilge Pump, 46 Gallon Internal Fuel Tank, 1670dtx Hypalon Tube with Five (5) Chambers & Five (5) Pressure Relief Valves, Heavy Duty Rubstrake, Lifelines, Owners Manual, and Foot Pump	$ 53,195.00	$ 53,195.00
	Console/ Seating		
1	Full Size Windscreen Mounted to T-top	$ 875.00	$ 875.00
1	Leaning Post Backrest	$ 470.00	$ 470.00
1	Leaning Post Flip Up Footrest	$ 420.00	$ 420.00
	Console/ Seating Sub Total: $ 1,765.00		
	Accessories		
1	T-top, Aluminum with hard top upgrade	$ 10,915.00	$ 10,915.00
1	T-top Electronics Box	$ 1,450.00	$ 1,450.00
1	Antenna Arch with Integrated Dive Ladder	$ 6,960.00	$ 6,960.00
	Accessories Sub Total: $ 19,325.00		
	Tube Accessories		
1	Color Tube Upgrade - RED	$ 1,575.00	$ 1,575.00
1	Tube Grab Handles (pair)	$ 195.00	$ 195.00
1	Boarding Wear Patch (pair)	$ 315.00	$ 315.00
	Tube Accessories Sub Total: $ 2,085.00		
	Electrical/ Electronics		
1	Additional Marine Battery with Isolator	$ 365.00	$ 365.00
1	LED Navigation Light Upgrade	$ 260.00	$ 260.00
1	LED Flood Lights, pair	$ 775.00	$ 775.00
	Electrical/ Electronics Sub Total: $ 1,400.00		
	Engines		
1	Mercury 115HP Four Stroke Engine, complete rigging and installation	$ 14,513.00	$ 14,513.00
1	Hydraulic Steering (in-lieu) Single Engine Only	$ 1,425.00	$ 1,425.00
	Engines Sub Total: $ 15,938.00		
	Transport		
1	Bunk Trailer with jack	$ 6,545.00	$ 6,545.00
1	Freight Prep: Load & Block	$ 730.00	$ 730.00
	Transport Sub Total: $ 7,275.00		

Colors

Hull	Light Grey	**Tube**	Red
Console	Light Grey	**Rubstrake**	Black
Upholstery	Black	**LL Patches**	Black

NOTES: *Items Listed Below Not Included in total quoted sales price*

Sub Total	$ 100,983.00
Total Sales Price	**$ 100,983.00**
Deposit Required	$ 50,491.50
Balance to be Paid	$ 50,491.50

A deposit is required. Progress payments may be required. Delivery dates are not guaranteed.

The balance is due and payable upon completion and prior to the boat shipping. Prices for non-RIBCRAFT manufactured components are not guaranteed. Prices FOB: Origin

THE GENERAL CONDITIONS ON THE BACK AND ANY OTHERS, IF ANY, ARE HEREBY MADE A PART OF THIS QUOTE.

THIS DRAWING FILE (AND THE INFORMATION SHOWN THERON) IS CONFIDENTIAL AND PROPRIETARY AND SHALL NOT BE USED, DISCLOSED TO OTHERS, OR REPRODUCED BY ANY MEANS FOR ANY PURPOSE IN HARD COPY FORM OR IN MACHINE READABLE FILES, WITHOUT THE WRITTEN CONSENT OF RIBCRAFT USA LLC.

REVISIONS

REV	ZONE	DESCRIPTION	DATE

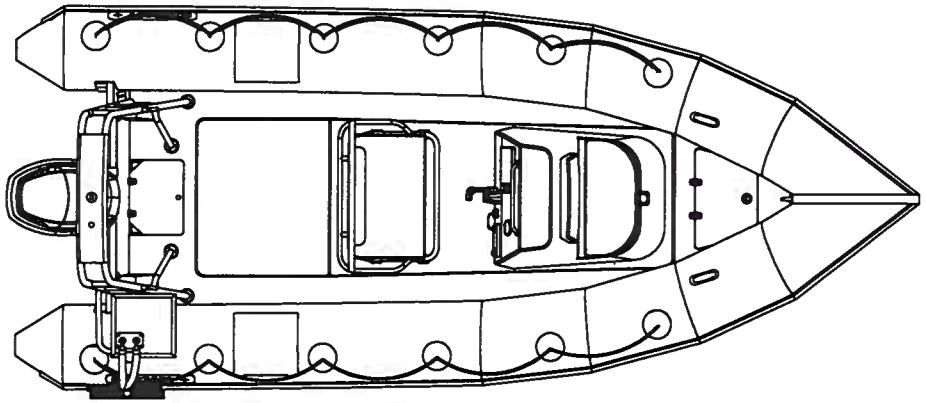

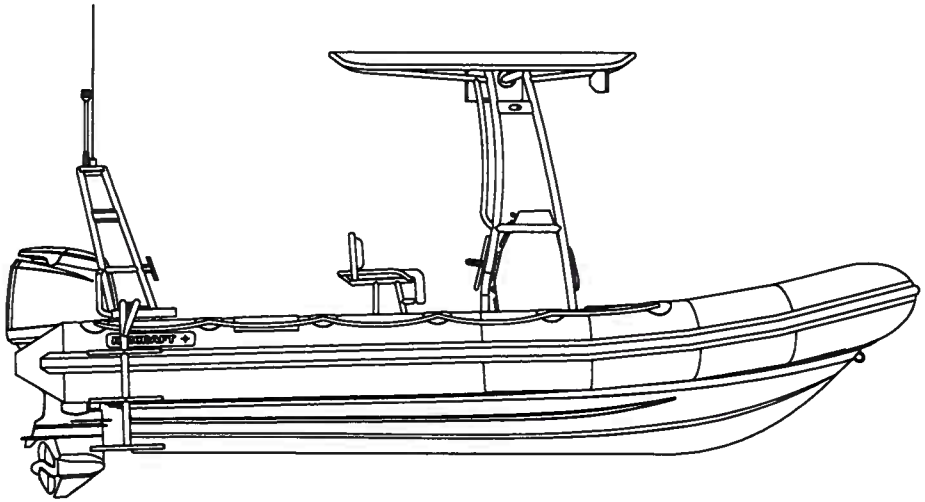

Specifications:

Length Overall..... 19'-4"
Internal Length.....14-9'
Beam (Tube Max)..... 8'-0"
Internal Beam..... 5'-1"
Tube Diameter.....20"

NOTE: LAYOUT IS PRELIMINARY AND SUBJECT TO CHANGE

RIBCRAFT

RIBCRAFT 5.85 - Biddeford FD - General Arrangement

DWG NO. RC585-BFD-GA-01	REV ~
DRAWN ARL	DATE 18 SEPTEMBER 2025
SIZE A / SCALE None	SHEET 1 of 1

5.85

Specifications and Details

AF14 / AF16		4.8		5.7		5.85		6.5	
LOA:	13'9" / 15'10"	LOA:	15'7"	LOA:	18'7"	LOA:	19'4"	LOA:	21'5"
Beam:	5'9" / 6'9"	Beam:	6'11"	Beam:	8'5"	Beam:	8'	Beam:	8'5"
Weight (w/out engine):	315 lbs / 390 lbs	Weight (w/out engine):	685 lbs	Weight (w/out engine):	1,890 lbs	Weight (w/out engine):	1,295 lbs	Weight (w/out engine):	1,365 lbs
Dead rise aft:	N/A	Dead rise aft:	23°	Dead rise aft:	22°	Dead rise aft:	22°	Dead rise aft:	25°
Dead rise forward:	N/A	Dead rise forward:	43°	Dead rise forward:	43°	Dead rise forward:	43°	Dead rise forward:	44°
Tube diameter:	20" / 20"	Tube diameter:	18"	Tube diameter:	20"	Tube diameter:	20"	Tube diameter:	20"
Internal length on deck:	10'2" / 11'6"	Internal length on deck:	11'10"	Internal length on deck:	13'10"	Internal length on deck:	14'9"	Internal length on deck:	16'4"
Internal beam on deck:	2'8" / 3'2"	Internal beam on deck:	4'1"	Internal beam on deck:	4'11"	Internal beam on deck:	5'1"	Internal beam on deck:	5'6"
Draft (w/out engine):	7" / 7"	Draft (w/out engine):	12"	Draft (w/out engine):	14"	Draft (w/out engine):	14"	Draft (w/out engine):	16"
Maximum people:	8 / 10	Maximum people:	6	Maximum people:	10	Maximum people:	10	Maximum people:	12
Max HP:	50 / 60	Max HP:	70	Max HP:	165	Max HP:	135	Max HP:	180
Fuel capacity:	6.6 gal*	Fuel capacity:	6.6 gal*	Fuel capacity:	33 gal	Fuel capacity:	46 gal	Fuel capacity:	60 gal
Tube:	1880 dtx Hypalon®	Tube:	1670 dtx Hypalon®	Tube:	1670 dtx Hypalon®	Tube:	1670 dtx Hypalon®	Tube:	1670 dtx Hypalon®
Chambers:	4+2 / 5+2	Chambers:	5	Chambers:	5	Chambers:	5	Chambers:	5
Pressure relief valves:	4 / 5	Pressure relief valves:	5	Pressure relief valves:	5	Pressure relief valves:	5	Pressure relief valves:	5

*external tank

*external tank; optional internal 16 gal tank available

All specs, equipment and options subject to change without notice. | LOA and beam may vary slightly based on inflation pressure of the tube. | Additional dimensions/specs available on request.

RIBCRAFT USA, LLC | TEL: 781.639.9065 | FAX: 781.639.9062 | www.ribcraftusa.com | info@ribcraftusa.com

RIBCRAFT

RIBCRAFT

RIBCRAFT USA, LLC
88 Hoods Lane, PO Box 463
Marblehead, MA 01945
t. 781.639.9065 f. 781.639.9062
toll free. 866 RIBS USA
www.ribcraftusa.com

COPY

PROPOSAL OPTION B

September 22, 2025

City of Biddeford Fire Department
152 Alfred Street
Biddeford, ME 04005
Attn: Assistant

RE: RFP – Supply and Delivery of a Fire Department Emergency Response Boat

On behalf of RIBCRAFT USA, LLC, I am pleased to provide you with the following proposal for one (1) RIBCRAFT 6.5 with all specified options and equipment in response to RFP – Supply and Delivery of a Fire Department Emergency Response Boat, dated August 20, 2025.

The RIBCRAFT 6.5 is built to the highest commercial grade specifications and standards resulting in remarkably solid, well performing, and safe rigid inflatable boat (RIB). As the manufacturer of the above stated boat, this boat meets the requirements put forth by the City of Biddeford Fire Department.

Please find enclosed the following documents:

- Completed & Signed Bid Documents
- Bidder Response Supplement
- Detailed RIBCRAFT Quote
- RIBCRAFT Brochure

With safety and reliability at the core of all RIBCRAFT designs, the RIBCRAFT 6.5 features a deep V hull, full-length spray rails, high bow sheer, and a heavy-duty multi chambered Hypalon tube. To insure the utmost in durability and strength all hulls are solid fiberglass with an internal composite stringer system.

For almost twenty-five years, safety and rescue professionals have come to expect the most in quality, dependability and service from RIBCRAFT and our line of professional grade rigid inflatable boats (RIBs). Constructed by skilled craftsmen in the United States (Massachusetts), every boat is built with the understanding that it will receive hard, offshore 24/7 commercial use.

Many thanks in advance for your time and consideration.

Kelly Marie

RIBCRAFT USA, LLC

ATTACHMENT A:

REFERENCE FORM

Bidder: RIBCRAFT USA, LLC

RFB Title: The Supply, and Delivery of a Fire Department Emergencry Response Boat

Bidder must provide references for:

All current contracts under which the vendor's equipment has been operational for at least two years.

Reference: Spotsylvania Sherriff's Office Contact: Carter Wells
Address: 9119 Dean Riding Lane Spotsylvania, VA 22553 Phone: 540-507-7195
Fax: cwells@spotsylvania.va.us
Description and date(s) of supplies or services provided: RIBCRAFT built and delivered a RIBCRAFT 6.5 to the Spotyslvania Sherriff's Department in July of 2019. The boat had a smiliar layout with a center console, T-top, antenna arch with integrated dive ladder, and a 150HP outboard.

Reference: Portsmouth Fire Department Contact: John Goodwin
Address: 170 Court Street Portsmouth, NH 03801 Phone: 603-944-7920
Fax: jwgoodwin@cityofportsmouth.com
Description and date(s) of supplies or services provided: RIBCRAFT built and delivered a RIBCRAFT 7.8 to the Portsmouth Fire Department in April of 2019. RIBCRAFT worked with the Chief to understand their operational requirements and built a boat that meets all of their demands - a reliable and improved rescue boat that was also equipped with fire suppression capabilities.

Reference: Maine Marine Patrol Contact: Steve Ingram
Address: 21 State House Station Augusta, ME 04333 Phone: 207-624-7338
Fax: steve.ingram@maine.gov
Description and date(s) of supplies or services provided: RIBCRAFT has built and delivered numerous RIBCRAFT 4.8 boats to the Maine Marine Patrol. The RIBs are onboard MMP's larger patrol boats and a favorite among the officers and the most used boats in the fleet.

attach additional sheets if necessary

ATTACHMENT B: BID FORM

The undersigned BIDDER proposes and agrees, if the Bid is accepted to enter into an Agreement with the City, to complete all work as specified or indicated in the "REQUEST TO BID: for the supply, delivery of a FIRE DEPARTMENT EMERGENCY RESPONSE BOAT and TRAILER, exactly as outlined and detailed in this bid.

Bid Price: One hundred thirty two thousand nine hundred thirty seven **dollars ($** 132,937.00 **)**

BIDDER accepts all the terms and conditions of the Instructions to Bidders.

In submitting this Bid, BIDDER represents, as more fully set forth in the Agreement, that: BIDDER has examined copies of all the Contract Documents **and of the following Addenda**:

Date	N/A	Number	N/A
Date		Number	

BIDDER shall submit an itemized list of costs including vessel accessories, attachments, trailer and delivery as outlined in this bid.

BIDDER agrees that Prevailing Wage Rates if applicable will be paid for the appropriate classification of work.

The undersigned certifies under penalties of perjury that this Bid is in all respects bona fide, fair and made without collusion or fraud with any other person. As used in this paragraph, the word "person" shall mean any natural person, joint venture, partnership, corporation or other business or legal entity.

Signed: _____ Print Name: Kelly Marie

Company: RIBCRAFT USA, LLC

Business Address: 88 Hoods Lane

Marblehead, MA 01945

Email: kmarie@ribcraftusa.com

FAX:

RIBCRAFT USA, LLC
88 Hoods Lane, PO Box 463
Marblehead, MA 01945
t. 781.639.9065 f. 781.639.9062
toll free. 866 RIBS USA
www.ribcraftusa.com

PROPOSAL OPTION B

BIDDER RESPONSE SUPPLEMENT

Proposal for RFP – Supply and Delivery of a Fire Department Emergency Response Boat

CERTIFICATIONS / MANUFACTURERS EXPERIENCE:

RIBCRAFT hereby certifies that the proposed 2026 21'5" RIBCRAFT 6.5 rigid inflatable boat and additional items related hereto are compliant with the technical specifications contained in the Invitation For Bid dated August 20, 2025 for RFP – Fire Department Emergency Response Boat. Such compliancy includes, but is not limited to, design, construction, performance, durability, and warranty except where indicated.

The proposed RIBCRAFT 6.5 Rigid Inflatable Boat is designed, built and tested in accordance with the American Boat & Yacht Council's quality technical practices and engineering standards for the design, construction and safety of small craft. The boat will be equipped and configured as specified in the bid package and shall meet all necessary requirements.

EXPERIENCE / CREDENTIALS

Headquartered in Marblehead, Massachusetts, RIBCRAFT designs and builds safe, durable, performance oriented rigid inflatable boats (RIBs) that fulfill the most demanding professional applications. For nearly 25 years, RIBCRAFT has built professional grade RIBs and inflatables in the United States for military applications, law enforcement agencies, safety professionals, and private industry. The RIBCRAFT model line ranges in size from 14 to 42 feet.

Since inception in 2001, RIBCRAFT USA, LLC has developed one of the strongest and most recognized brands in the rigid inflatable boat market. RIBCRAFT focuses on government and commercial users who comprise 85% of the company's revenues.

Every RIBCRAFT is built to customer-defined specifications following a detailed design process, including not only powering options and color schemes but also general arrangement, electrical packages, and myriad customer-specific equipment configurations. The RIBCRAFT team is comprised of marine professionals experienced in and passionate about designing and building RIBs that meet and exceed customer expectations and mission requirements.

Incorporating a conventional solid fiberglass hull with an inflatable tube for increased buoyancy, stability, and overall performance RIBCRAFT builds professional grade rigid

inflatable boats ranging in size from 14' to 42' that fulfill a variety of missions from patrol and rescue to interdiction and military operations. Every boat is built to industry recognized standards featuring commercial grade fiberglass hulls and heavy duty multi-chambered air tubes. Designed for professional applications, a RIBCRAFT RIB with a deep V hull and heavy duty tube provides unparalleled performance regardless of the sea conditions.

RIBCRAFT supplies the United States Navy with the standard 7 Meter shipboard RIB and the 11 Meter Expeditionary RIB. Additionally, RIBCRAFT supplies commercial grade boats to the US Air Force, US Fish & Wildlife, state and local law enforcement agencies, fire departments, and industry (profit & non-profit).

REFERENCES:

As requested, RIBCRAFT has built Fire and Rescue Boats for the following agencies in recent years:

Spotsylvania's Sherriff's Office
9119 Dean Riding Lane
Spotsylvania, VA 22553
Carter Wells
cwells@spotsylvania.va.us
540-507-7195

Portsmouth Fire Department
170 Court Street
Portsmouth, NH 03801
John Goodwin
jwgoodwin@cityofportsmouth.com
603-944-7920

Maine Marine Patrol
21 State House Station
Augusta, ME 04333
Steve Ingram
Steve.ingram@maine.gov
207-624-7338

Louisa County Sherriff
1 Woolfolk Ave, Suite 101
Louisa, VA 23093
Dustin Lowe
dulowe@louisa.org
540-967-0401

BOAT SPECIFICATIONS:

Based on the invitation for bid and the estimated referenced value, RIBCRAFT hereby proposes the RIBCRAFT 6.5 as a rescue boat for the City of Biddeford. The RIBCRAFT 6.5 Rigid Inflatable Boat specifications are as indicated below and as illustrated in the attached RIBCRAFT 5.85 Specification Marketing Sheet.

LOA:	21'5"
Beam:	8'5"
Internal Length:	16'4"
Internal Beam:	5'6"
Weight:	1,400 – 1,800 lbs (without engine)

The proposed 2026 RIBCRAFT 6.5 features a commercial grade fiberglass deep V hull with a heavy duty 1670 dtx red Hypalon tube with five air chambers each with pressure relief valves, a pair of boarding wear patches and a pair of tube grab handles. The boat is configured with a center console with front bench seat, full size windscreen, leaning post with backrest, footrest and storage, a t-top with aluminum hard top, antenna arch with integrated dive ladder, LED navigation and flood lights, a 150HP Mercury four stroke outboard engine, a bunk trailer and all other features and options as specified in the Scope of Services.

Please see the enclosed Detailed Quote and Drawing for the quoted configuration which outlines all features and options included.

The RIBCRAFT 6.5 meets the requirements and specifications for the boat and engine as outlined in the RFP August 20, 2025.

Length/Measurements
The RIBCRAFT 6.5 at 21'5" as proposed is fully compliant with the specifications as noted above and in the Scope of Services.

Hull Construction
The RIBCRAFT 6.5 as proposed is fully compliant with the features outlined. Featuring a heavy duty commercial grade solid fiberglass (FRP) hull, the 6.5 also includes an internal longitudinal and transverse composite stringer system, full length lifting strakes, underdeck wire conduits, and a molded non-skid deck with removal deck panels for below deck access. There is no wood in the vessel's construction.

Tube Construction
The RIBCRAFT 6.5 features all tube accessories as outlined and is fully compliant. The RIBCRAFT 6.5 features a semi-active heavy duty multi chambered (five (5) chambers) 1670 dtx Hypalon tube. To insure the utmost in strength and reliability, all seams are triple bonded (overlapped with internal and external seam tapes), the tube is permanently bonded to the hull, and each chamber features pressure relief valves to prevent over inflation or blow outs. Additionally, every tube features a high profile rubstrake which is 1.25" high by 5" wide.

Layout
The RIBCRAFT 6.5 features all accessories as outlined and is fully compliant. All of the required features are included as indicated in the enclosed itemized RIBCRAFT 6.5 Quote. Of critical importance, the proposed 6.5 features a center console with front bench seat, leaning post, T-top, and an antenna arch with integrated folding dive ladder.

Engine
The proposed RIBCRAFT 6.5 features a single 150HP Mercury four stroke engine complete with digital controls, gauges, and propeller. The engine is equipped with hydraulic steering and the transom height is 25". The engine is directly mounted to the transom.

Electrical/Electronics
The RIBCRAFT 6.5 features all electronics as outlined and is fully compliant. All wiring and electrical installations will meet or exceed ABYC standards. All of the required features are included as indicated in the enclosed itemized RIBCRAFT 6.5 Detailed Quote.

Trailer
RIBCRAFT has proposed a dual axle heavy duty bunk trailer.

WARRANTIES

All warranty items are as specified in RIBCRAFT's standard commercial warranty. RIBCRAFT warrants the boat (hull and tube) for one year from date of purchase. Components and accessories not manufactured by RIBCRAFT receive the warranty provided by the original equipment manufacturer. The manufacturer of the Mercury engine offers a one year warranty for commercial users.

DELIVERY

Currently, delivery for one new RIBCRAFT 6.5 as specified is estimated at approximately one hundred eighty (180) days from date of award of contract. RIBCRAFT will deliver the boat to Biddeford, ME upon completion at no charge.

SERVICE & SUPPORT

As a manufacturer located in New England, RIBCRAFT is uniquely positioned to provide direct factory service and support. RIBCRAFT guarantees the continuing availability of Logistical Support (i.e. spares and other technical services) for a minimum of 10 years from time of delivery. As required, RIBCRAFT is happy to provide needed service support either directly through a RIBCRAFT factory service technician or a factory approved service center within the vessels' operation area. Given the proximity to Maine, RIBCRAFT's capability to provide service and support is paramount and allows you to work directly with the manufacturer, much like the Kennebunk Harbormaster, Portsmouth Fire, Pittsfield Fire and Maine Marine Patrol have experienced.

RIBCRAFT will provide complete COTs Operation and Maintenance Manuals with complete third party manuals for all electronics and significant mechanical items (engine). As requested, RIBCRAFT will provide instruction and technical manuals.

PRICING

The quoted price for the RIBCRAFT 6.5 and trailer as specified per the RFP is $132,937.00. RIBCRAFT will deliver the completed boat, engine and trailer to Biddeford at no charge. A complete pricing detail is provided in the enclosed Detailed Quote.

RIBCRAFT
PO Box 463, Marblehead, MA 01945
t. 781.639.9065 f. 781.639.9062
www.ribcraftusa.com

QUOTE

Date	Delivery	Contact
9/22/25	TBD	Kelly M
Model	**Hull #:**	**Rev.**
6.5		
Ref:		

To: Biddeford Fire Department
Ken Thorpe
152 Alred Street
Biddeford, ME 04005

Phone:
Email: kenneth.thorpe@biddefordmaine.org

1	**2026 RIBCRAFT 6.5 PROFESSIONAL - Outboard Engine Configuration** Base Boat includes Center Console with Front Bench Seat and SS Grab Handle, Two (2) Access Hatches, Leaning Post, Hydraulic Steering, Anchor Locker, Bow Eye, Bow Cleat, Two (2) Stern Tie Down Eyes, Eight (8) Switch Electrical Panel, Battery, Battery Switch, Navigation Lights, Compass, Electric Bilge Pump, 60 Gallon Fuel Tank, 1670 dtx Hypalon Tube with Five (5) Chambers & Five (5) Pressure Relief Valves, Heavy Duty Rubstrake, Lifelines, Owner's Manual, Foot Pump	$ 80,915.00	$ 80,915.00
	Console/Seating		
1	Full Size Windscreen Mounted to T-top	$ 875.00	$ 875.00
1	Leaning Post Backrest	$ 480.00	$ 480.00
1	Leaning Post Flip Up Footrest	$ 425.00	$ 425.00
	Console/ Seating Sub Total: $ 1,780.00		
	Accessories		
1	T-top, Aluminum with hard top upgrade	$ 11,040.00	$ 11,040.00
1	T-top Electronics Box	$ 1,630.00	$ 1,630.00
1	Antenna Arch with Integrated Dive Ladder	$ 7,850.00	$ 7,850.00
	Accessories Sub Total: $ 20,520.00		
	Tube Accessories		
1	Color Tube Upgrade - RED	$ 1,630.00	$ 1,630.00
1	Tube Grab Handles (pair)	$ 195.00	$ 195.00
1	Boarding Wear Patch (pair)	$ 315.00	$ 315.00
	Tube Accessories Sub Total: $ 2,140.00		
	Electrical/ Electronics		
1	Additional Marine Battery with Isolator	$ 365.00	$ 365.00
1	LED Navigation Light Upgrade	$ 260.00	$ 260.00
1	LED Flood Lights, pair	$ 775.00	$ 775.00
	Electrical/ Electronics Sub Total: $ 1,400.00		
	Engines		
1	Mercury 150HP Four Stroke Engine, complete rigging and installation with hydraulic steering	$ 18,162.00	$ 18,162.00
	Engines Sub Total: $ 18,162.00		
	Transport		
1	Bunk Trailer with jack	$ 7,245.00	$ 7,245.00
1	Freight Prep: Load & Block	$ 775.00	$ 775.00
	Transport Sub Total: $ 8,020.00		

Colors

Hull	Light Grey	**Tube**	Red
Console	Light Grey	**Rubstrake**	Black
Upholstery	Black	**LL Patches**	Black

NOTES: *Options listed below not included in total quoted price*

Sub Total	$ 132,937.00
Total Sales Price	**$ 132,937.00**
Deposit Required	$ 66,468.50
Balance to be Paid	$ 66,468.50

A deposit is required. Progress payments may be required. Delivery dates are not guaranteed.

The balance is due and payable upon completion and prior to the boat shipping. Prices for non-RIBCRAFT manufactured components are not guaranteed. Prices FOB: Origin

THE GENERAL CONDITIONS ON THE BACK AND ANY OTHERS, IF ANY, ARE HEREBY MADE A PART OF THIS QUOTE.

THIS DRAWING FILE (AND THE INFORMATION SHOWN THERON) IS CONFIDENTIAL AND PROPRIETARY AND SHALL NOT BE USED, DISCLOSED TO OTHERS, OR REPRODUCED BY ANY MEANS FOR ANY PURPOSE IN HARD COPY FORM OR IN MACHINE READABLE FILES, WITHOUT THE WRITTEN CONSENT OF RIBCRAFT USA LLC.

REVISIONS

REV	ZONE	DESCRIPTION	DATE

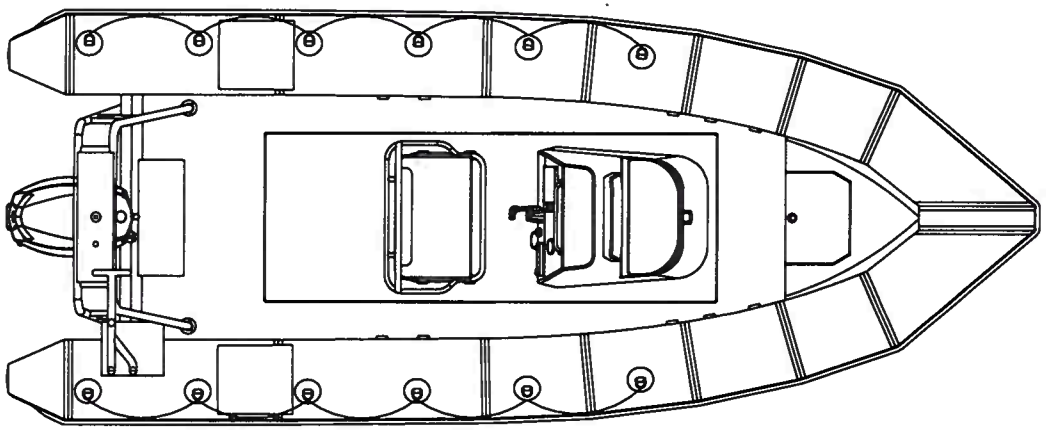

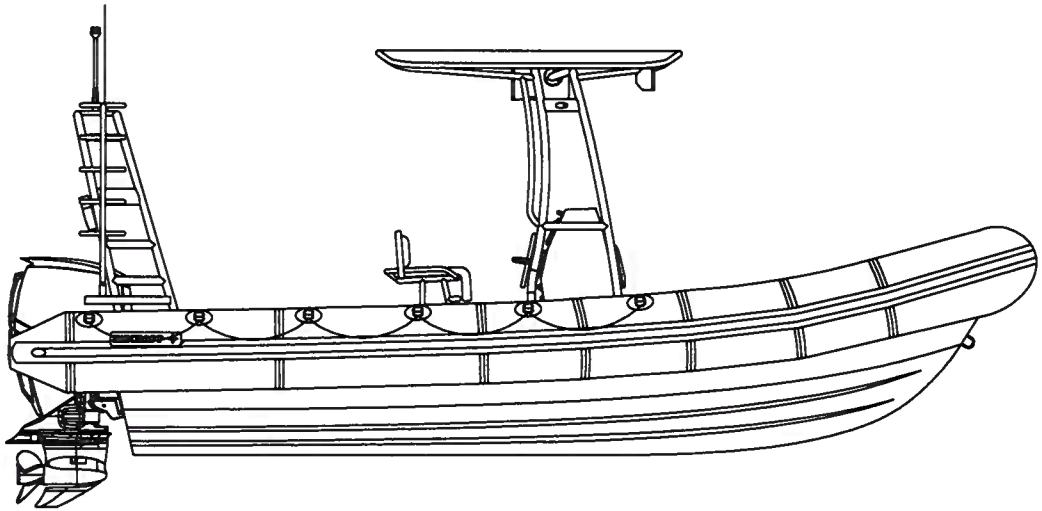

Specifications:

Length Overall..... 21'-5"
Internal Length.....16-4'
Beam (Tube Max)..... 8'-5"
Internal Beam..... 5'-6"
Tube Diameter.....20"

NOTE: LAYOUT IS PRELIMINARY AND SUBJECT TO CHANGE

RIBCRAFT

RIBCRAFT 6.5 - Biddeford FD - General Arrangement

DWG NO. RC65-BFD-GA-01	REV ~
DRAWN ARL	DATE 18 SEPTEMBER 2025
SIZE A / SCALE None	SHEET 1 of 1

6.5

Specifications and Details

AF14 / AF16		4.8		5.7		5.85		6.5	
LOA:	13'9" / 15'10"	LOA:	15'7"	LOA:	18'7"	LOA:	19'4"	LOA:	21'5"
Beam:	5'9" / 6'9"	Beam:	6'11"	Beam:	8'5"	Beam:	8'	Beam:	8'5"
Weight (w/out engine):	315 lbs / 390 lbs	Weight (w/out engine):	685 lbs	Weight (w/out engine):	1,890 lbs	Weight (w/out engine):	1,295 lbs	Weight (w/out engine):	1,365 lbs
Dead rise aft:	N/A	Dead rise aft:	23°	Dead rise aft:	22°	Dead rise aft:	22°	Dead rise aft:	25°
Dead rise forward:	N/A	Dead rise forward:	43°	Dead rise forward:	43°	Dead rise forward:	43°	Dead rise forward:	44°
Tube diameter:	20" / 20"	Tube diameter:	18"	Tube diameter:	20"	Tube diameter:	20"	Tube diameter:	20"
Internal length on deck:	10'2" / 11'6"	Internal length on deck:	11'10"	Internal length on deck:	13'10"	Internal length on deck:	14'9"	Internal length on deck:	16'4"
Internal beam on deck:	2'8" / 3'2"	Internal beam on deck:	4'1"	Internal beam on deck:	4'11"	Internal beam on deck:	5'1"	Internal beam on deck:	5'6"
Draft (w/out engine):	7" / 7"	Draft (w/out engine):	12"	Draft (w/out engine):	14"	Draft (w/out engine):	14"	Draft (w/out engine):	16"
Maximum people:	8 / 10	Maximum people:	6	Maximum people:	10	Maximum people:	10	Maximum people:	12
Max HP:	50 / 60	Max HP:	70	Max HP:	165	Max HP:	135	Max HP:	180
Fuel capacity:	6.6 gal*	Fuel capacity:	6.6 gal*	Fuel capacity:	33 gal	Fuel capacity:	46 gal	Fuel capacity:	60 gal
Tube:	1880 dtx Hypalon®	Tube:	1670 dtx Hypalon®	Tube:	1670 dtx Hypalon®	Tube:	1670 dtx Hypalon®	Tube:	1670 dtx Hypalon®
Chambers:	4+2 / 5+2	Chambers:	5	Chambers:	5	Chambers:	5	Chambers:	5
Pressure relief valves:	4 / 5	Pressure relief valves:	5	Pressure relief valves:	5	Pressure relief valves:	5	Pressure relief valves:	5

*external tank

*external tank; optional internal 16 gal tank available

ment and options subject to change without notice. | LOA and beam may vary slightly based on inflation pressure of the tube. | Additional dimensions/specs available on request.

September 19, 2025

City of Biddeford Fire Department
152 Alfred Street
Biddeford, Maine, 04005

Subject: Zodiac North America, Inc. Response to Request for Proposal
The Supply, and Delivery of a Fire Department Emergency Response Boat

Encl: 1) Cover Page
2) Attachment A
3) Attachment B
4) ZNA INC. quote sheet, drawing package, technical data package, and warranty statement

Dear City of Biddeford Fire Department

Zodiac of North America Inc. (ZNA) is pleased to provide the enclosed technical and pricing proposal in response to Request for ***The Supply, and Delivery of a Fire Department Emergency Response Boat*** Zodiac of North America will be offering our Zodiac MilPro branded SRA 650 craft platform as per town specification – This platform is used mostly by Federal, State, and Local Fire Rescue Units around the world – Zodiac of North America is proud to have this platform built in our United States facility located in Stevensville Maryland

Thank you for the opportunity to offer our Zodiac Milpro products in response to this solicitation.

Respectfully,

Justin R. Antolini
Commercial Sales Director
Zodiac of North America Inc.
540 Thompson Creek Road
Stevensville, Maryland 21666
Tax ID Number: 52-0906929
Gage Code: 60042
Duns Number: 059174847
GSA Contract Number: GS07F0298V

ATTACHMENT A:

REFERENCE FORM

Bidder: Zodiac Of North America Inc.

RFB Title: City of Biddeford Fire Department Invitation for Bids for The Supply, and Delivery of a Fire Department Emergency Response Boat

Bidder must provide references for:

All current contracts under which the vendor's equipment has been operational for at least two years.

Reference: St. Leonard Vol. Fire Dept Contact: Chief Brent Lankford
Address: 200 Calvert Beach Rd, St Leonard, MD 20685 Phone: 443-532-5549
Fax:
Description and date(s) of supplies or services provided:
Zodiac MilPro SRR 650 / 6.5 meter fiberglass fire rescue platform
Delieverd January 2023

Reference: Sunapee Fire Department Contact: John Galloway
Address: 9 Sargent Rd, Sunapee, NH 03782 Phone: (603) 763-5770
Fax:
Description and date(s) of supplies or services provided:
Zoidac MilPro SRA 650 / 6.5 Meter Aluminum Fire Rescue Boat with portable fire suppression system
Delievered March 2023

Reference: Longboat Key Police Department Contact: Frank Rubino
Address: 5460 Gulf of Mexico Drive, Longboat Key FL 34228 Phone: 941-316-1201
Fax: 941-373-7727
Description and date(s) of supplies or services provided:
Zoidac MilPro SRR 530 / 5.3 Meter Fiberglass Police Patrol / Water Rescue Boat
Delievered September of 2022

attach additional sheets if necessary

ATTACHMENT B: BID FORM

The undersigned BIDDER proposes and agrees, if the Bid is accepted to enter into an Agreement with the City, to complete all work as specified or indicated in the "REQUEST TO BID: for the supply, delivery of a FIRE DEPARTMENT EMERGENCY RESPONSE BOAT and TRAILER, exactly as outlined and detailed in this bid.

Bid Price: One Hundred Twenty Eight Thousand and Five Hundred **dollars ($** 128,500.00 **)**

BIDDER accepts all the terms and conditions of the Instructions to Bidders.

In submitting this Bid, BIDDER represents, as more fully set forth in the Agreement, that: BIDDER has examined copies of all the Contract Documents **and of the following Addenda**:

Date Number
Date Number

BIDDER shall submit an itemized list of costs including vessel accessories, attachments, trailer and delivery as outlined in this bid.

BIDDER agrees that Prevailing Wage Rates if applicable will be paid for the appropriate classification of work.

The undersigned certifies under penalties of perjury that this Bid is in all respects bona fide, fair and made without collusion or fraud with any other person. As used in this paragraph, the word "person" shall mean any natural person, joint venture, partnership, corporation or other business or legal entity.

Signed: _____ Print Name: Justin R. Antolini

Company: Zodiac Of North America Inc.

Business Address: 540 Thompson Creek Road

Stevensville, Maryland 21666

Email: justin.antolini@zodiacmilpro.com

FAX: 410-643-4491

ZODIAC OF NORTH AMERICA INC. ★ DELAWARE CORPORATE SEAL 1970

Subject: Qt2509-0556- SRR 650- Biddeford FD

From:	*Name:*	Justin Antolini
	Phone:	410-443-6439
	Email:	Justin.Antolini@ZodiacMilPro.com
To:	*Name:*	City of Biddeford ME
	Phone:	
	Email:	
Company:	Biddeford Fire Dept.	
Date:	9/11/2025	

Zodiac of North America is pleased to present the following quote for the SRR 650

Accompanying the quote are general assembly renderings of your vessel, showing basic configuration.

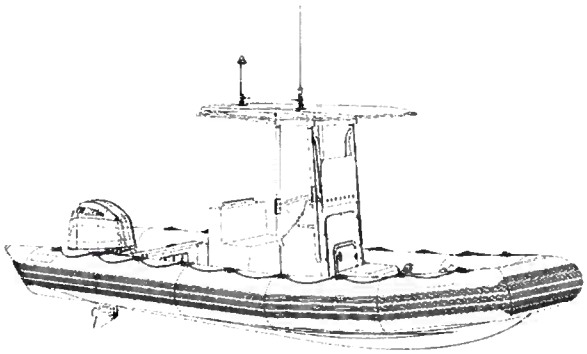

1. PRICE & CONFIGURATION

	SRR 650	Qty	EXT
RHIB			
	Zodiac Milpro SRR 650, Red Tube	1	
	- Auto-Inflation System	1	
	- Gorilla Handles on Collar	2	
	- Step Tread/ Boarding wear patch's	8	
Structural Equipment			
	MED Console, Fiberglass	1	
	T-top for the MED Console w/ ALU Hard Top	1	
	- Custom Large Windshield	1	
	Yeti Cooler Front Seat.	1	
Nav/Com Package			
	NavLight Package, LED	1	
	Garmin VHF 115 Marine Radio	1	
	Garmin GPSMAP 943xsv MFD	1	
	Garmin Transducer GT51M-TM	1	
	Ritchie Compass Black F-82	1	
	Rigid Flood Light Package	1	
Propulsion Package "Rigged Boat"			
	Yamaha F150XCA Outboard Engine 25" Shaft Length	1	
	- PreRig, Single 150 HP Yamaha 25" Shaft Mechanical Shift and Throttle	1	
	Yamaha Spec Prop	1	
Standard Systems			
	Steering System, Hydraulic	1	
	Fuel System, SRR 650, USG, EPA	1	
	- Label / Warning Package	1	
	Bilge Package	1	
Electrical System			
	2 Engine 3 Battery Electrical System	1	
	6 Switch Panel	1	

	SRR 650		
Misc.			
	Anchor Package, Fortress	1	
	Armstrong Dive Ladder	1	
	Ez Loader Aluminum Trailer dual axel	1	
	Logos and Lettering TBD Customer Spec	1	
	Sell Price, SRR 650 Delivered to City of Biddeford Fire Department:	**$**	**128,500.00**

	OPTIONS AND EXTRAS		
REMOVE OUTBOARD ENGINE "NON RIGGED PACKAGE"			
	REMOVE: Yamaha F150XCA Outboard Engine 25" Shaft Length	1	-$15,000.00
	SALES PRICE "NON RIGGED PACKAGE" NO OUTBOARD ENGINE:		**$ 113,500.00**
ADD TOWING PACKING			
	ADD: SRR 650 Towing Package. Rope Guard/ Engine Guard, Bow Post, and Aft Tow Post	1	+$9,000.00
	SALES PRICE ADD TOWING PACKAGE:		**$ 137,500.00**
ADD EMERGENCY LIGHT PACKAGE			
	ADD: WHELEN Lightbar and Siren/ Haller.	1	+$3,780.00
	SALES PRICE ADD EMERGENCY LIGHT PACKAGE:		**$ 132,280.00**

2. PRICE & CONFIGURATION

Tax Resale/Exemption Certificate. Sales and Resale/Exemption Certificate must be provided to ZNA at time of order.

Tariffs and trade regulations can change frequently. We reserve the right to modify our pricing to account for any changes in tariffs or government regulations that may affect the price of our products. Customers will be informed of any such changes with justification, upon ZNA price impact determination. Remedy will be mutually agreed before shipping.

Shipping Terms:

Incoterms 2020, FOB DESTINATION Biddeford FD

ZNA Proposed Payment Schedule:

25% At Time of Order

50% At Completion of Hull Production

25% At Time of Successful Sea Trial

Delivery:

Estimate Date of Readiness to be Shipped: **9-10 Months from Date of PO**

Validity:

Prices shown on this quote sheet are valid for **90 Days** from Date of Quote.

General Selling Conditions:

1. All custom orders are not returnable.
2. Payments made by credit cards may be subject to a 3% processing fee.
3. Packaging, freight, and shipping fees are estimates. The actual amount will be provided at time of invoicing plus a 15% administration fee.
4. Late payments are subject to a 2% per month late fee.

Best Regards,

Justin Antolini	Alec Pupshis
Commercial Sales Director	Project Manager
Zodiac of North America	Zodiac of North America

Acceptance of Order:

I agree to the terms and prices of this proposition

NAME: _____

COMPANY: _____

SIGNATURE

18/03/2025

SRR 650
SEA RIB RESPONDER

The Sea RIB Responders are designed for patrol and intervention duties. The range extends from 4.2 meters to 11 meters. All sizes feature a removable slide-on collar with a traditional round section that provides great stability in rough seas. The SRR is a shore based platform that can maintain a significant cruise speed in seas with short wavelength or large offshore swell. Fuel tanks are integrated below deck for sizes above 5m.
A variety of standard accessories featuring open, semi-closed or fully enclosed cabins is available to customize the configuration to the mission requirements. The SRR boats have been in operation worldwide for decades in Navies, Border Guard, Fire-Fighters and other authorities units from desertic to polar conditions.

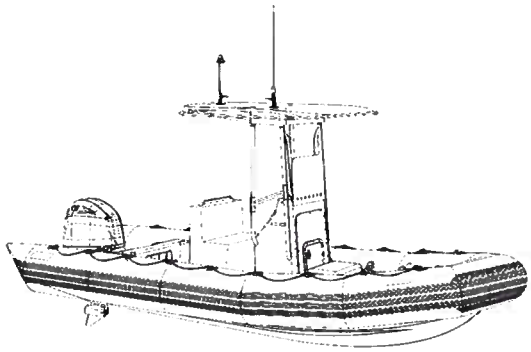

Dimensions - LENGTH

Length inflated with rope guard	21ft 11in
Length inflated without rope guard and engine tilted down	21ft 4in
Length inflated without rope guard and engine tilted up	23ft 4in
Length - Bare hull without tube	17ft 7in
Internal gross length - from inner collar vertical at bow to transom	16ft 3in
Internal net length - usable workdeck length	11ft 0in

Dimensions - WIDTH

Width inflated	8ft 6in
Width deflated	5ft 11in
Width - Bare hull	5ft9in
Internal net width - usable deck width	4ft 6in

Dimensions - HEIGHT

Height - from keel to aft frame or mast aerials*	12ft 6in

Dimensions - DRAFT

Draft - from waterline to keel - with max. payload*	Cat B: 1ft 10in Cat C: 2ft 2in

Dimensions - SURFACE

Internal gross surface - within the top-of-collar periphery	55.33 sq ft
Internal net surface - Usable deck without coaming & boxes	40.04 sq ft

Dimensions - TUBE

Tube Diameter	1ft 11.5in
Tube volume (no dive door version)	121.1 cubic feet
Number of tube compartment	5
Valve set up	4 Intercommunication valves
Tube installation	slid-on Removable
DURATANE Fabric type	1670 dtx
Tube shape	ROUND Shape
Tube color available	Grey, Black, Orange, Blue, Green
Optional tube features	.Rapid access door .Treadmaster anti-slip patches .Bow protective net

THIS MATERIAL CONTAINS PROPRIETARY DATA, UNAUTHORIZED DISCLOSURE, USE OR REPRODUCTION COULD RESULT IN LIABILITY.
SPECIFICATIONS ARE GIVEN WITH A TOLERANCE OF ± 3% ON STANDARD PRODUCT AND ± 5% ON PROTOTYPES. PICTURES ARE FOR ILLUSTRATION PURPOSE AND NOT CONTRACTUAL.

TECHNICAL DATASHEET

DESIGN CRITERIA

Available certification	(2013/53/EU) Design Category B and C
Acceleration criteria for hull structure & rule	Hull structure compliant to Bureau Veritas NR600 classification for an acceleration criteria of 3g.
Operational Profile - Class Design speed @SS0	40 kt

WEIGHT & CAPACITY

Minimum displacement* - MMOC	3,337 lbs
Maximum displacement* - MLDC	Cat B: 5,732lbs Cat C: 7,496lbs
Usable payload' (MLDC - MMOC)*	Cat B: 2,395lbs Cat C: 4,158lbs
Number of persons*	Cat B: 5 pax Cat C: 15 pax

HULL DESIGN

Hull Material	Infused Glassfiber Polyester
Hull shape	Deep V
Hull deadrise angle - at transom	24°
Hull deadrise angle - amidship	24°
Deck anti-slip	Molded antiskid surfacing
Deck equipment fixation	on Inserts
Hull drainage	.Self-draining deck through transom bailer .Manual plus electric bilge pump

TOWING & MOORING

Standard Strong fittings	1 Bow towing eye 2 Towing transom U-bolts
Optional Strong fittings	.Bow towing post .Aft towing post .Special equipment post

LIFTING

Standard Lifting fittings	4 Lift points

DECK ARRANGEMENT

Standard Deck Fittings	.Bow box .Aft technical locker
Optional- Available Consoles	.Single man GRP console .Medium GRP console .Double GRP console
Optional - Available Seatings	.Bolster .Fixed jockey .Mitigated Milpro AIR jockey
Optional - Aerial installation	.Roll bar
Other Optional Deck fittings	.Storage box .Storage pouch .Dive bottle support .Liferaft with support .Self-righting system

ELECTRICAL SYSTEM

Electrical system	Customized battery package with dual purposes 12 VDC AGM marine battery with bi-polar battery switches and automatic charging relays if multiple batteries.

PROPULSION

Engine configuration	SINGLE or TWIN Outboard
Minimum recommended power	100hp
Maximum power installation	150 hp | 551 lbs 2x 100 hp | 2x 419lbskg
Maximum allowed engine weight	551lbs | 2x419lbs
Shaft length - Outboard engine	X-25" | L-20"

FUEL SYSTEM

Tank configuration	Single rotomolded fuel tank integrated below deck
Fuel capacity	1x 240 L
Fuel system	Fuel gauge, filter & shut of valve

PERFORMANCES

Typical speed capability at lightship with max. engine power*	up to 36 knots
Typical range capability at lightship with max. engine power*	up to 250 nm

**Items marked with * may vary with final configuration*

This material contains proprietary data, unauthorized disclosure, use or reproduction could result in liability.
Specifications are given with a tolerance of ± 3% on standard product and ± 5% on prototypes. PICTURES ARE FOR ILLUSTRATION PURPOSE AND NOT CONTRACTUAL.

ZODIAC MILPRO

SRR 650 BIDDEFORD FD

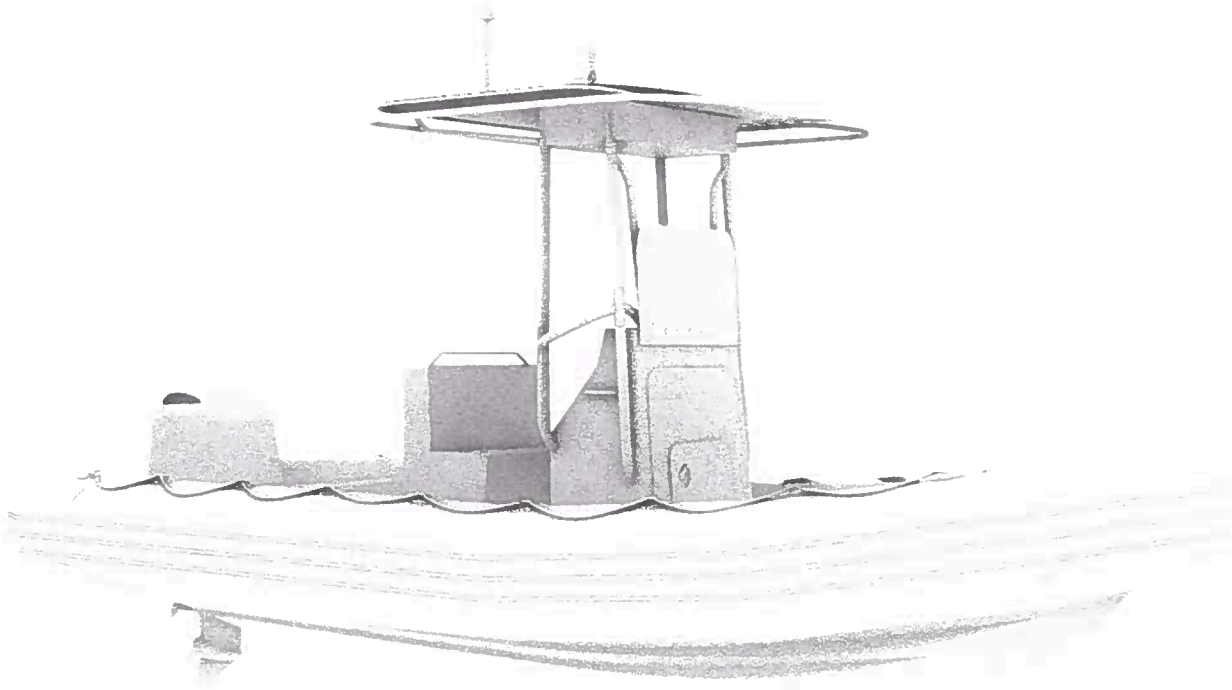

ZODIAC MILPRO

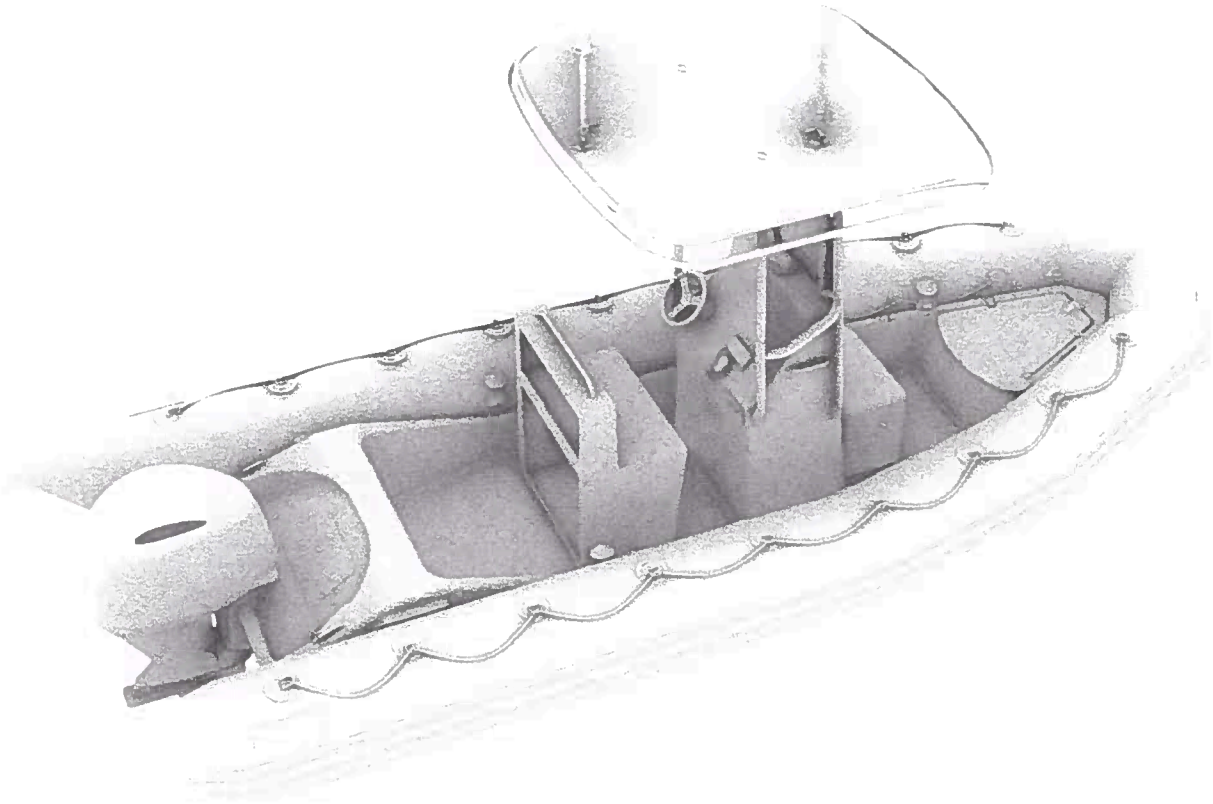

ZODIAC MILPRO

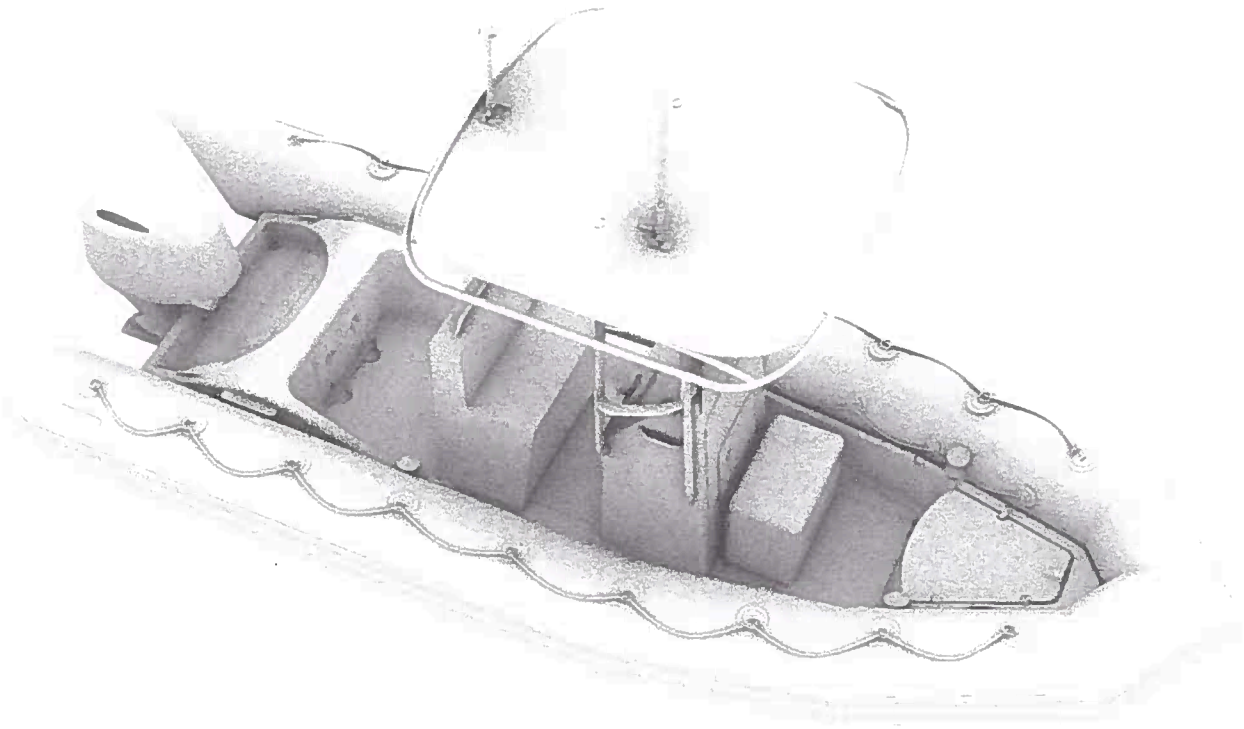

ZODIAC MILPRO

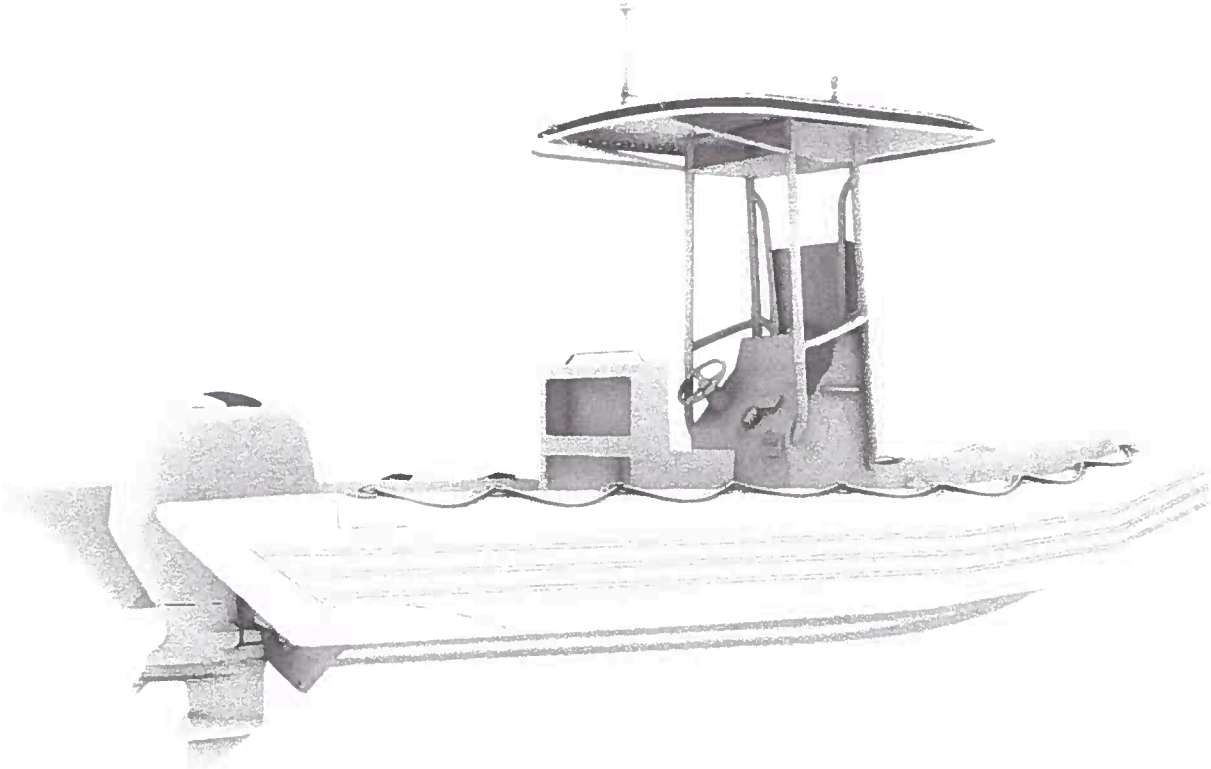

ZODIAC MILPRO

SRR 650 OPTIONAL TOWING PACKAGE

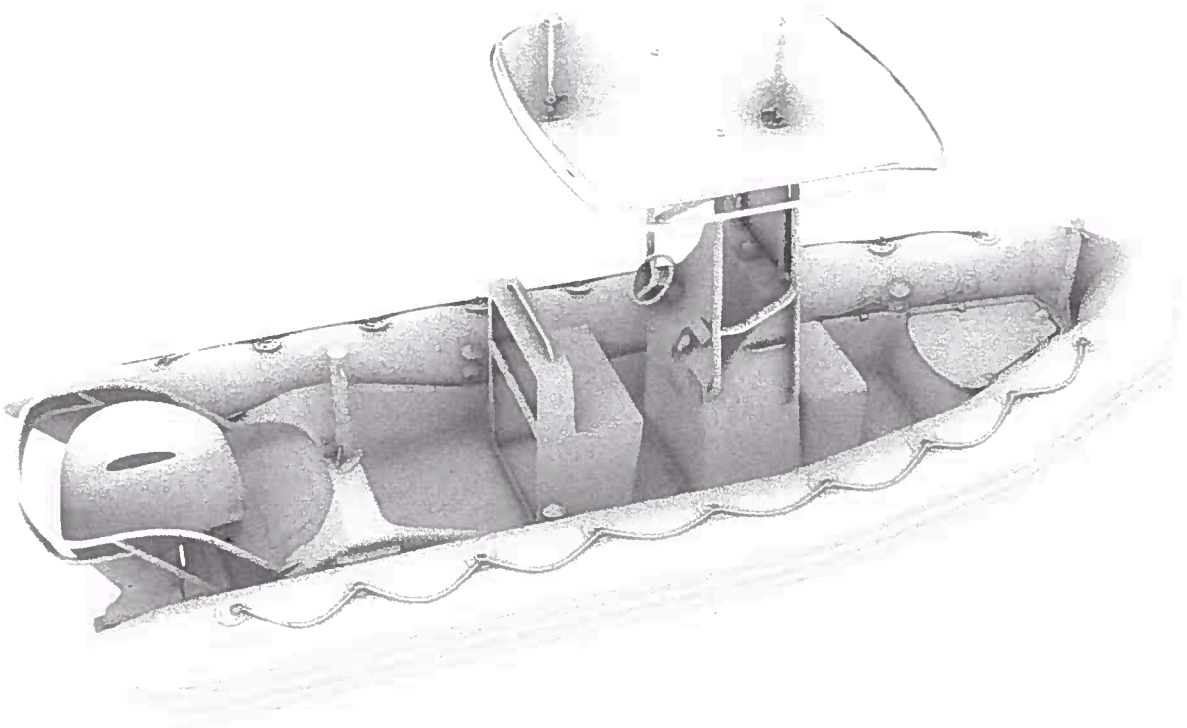

SRR 650 OPTIONAL OUTBOARD ENGINE "NON RIGGED PACKAGE"

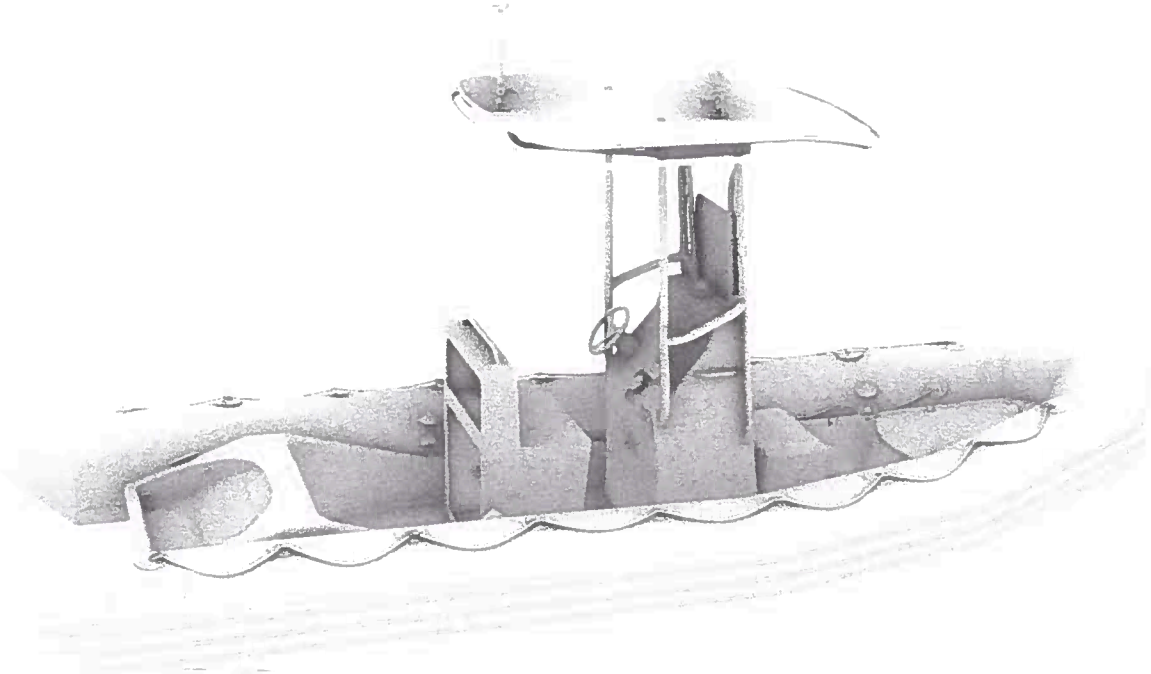

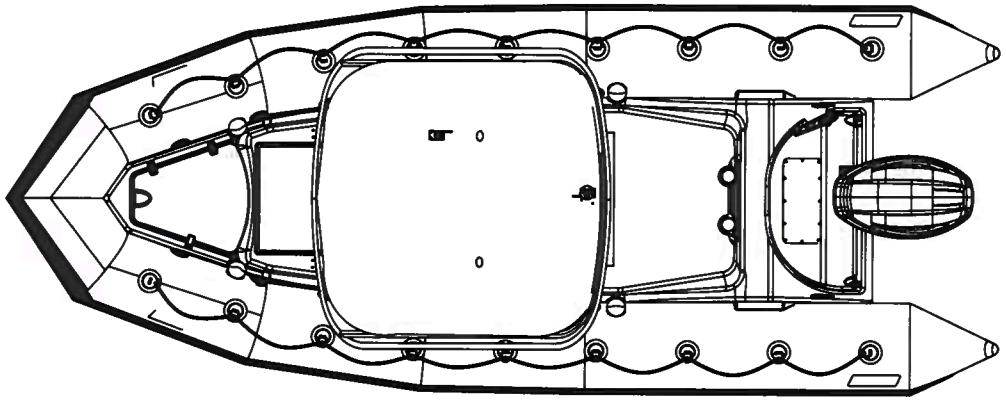

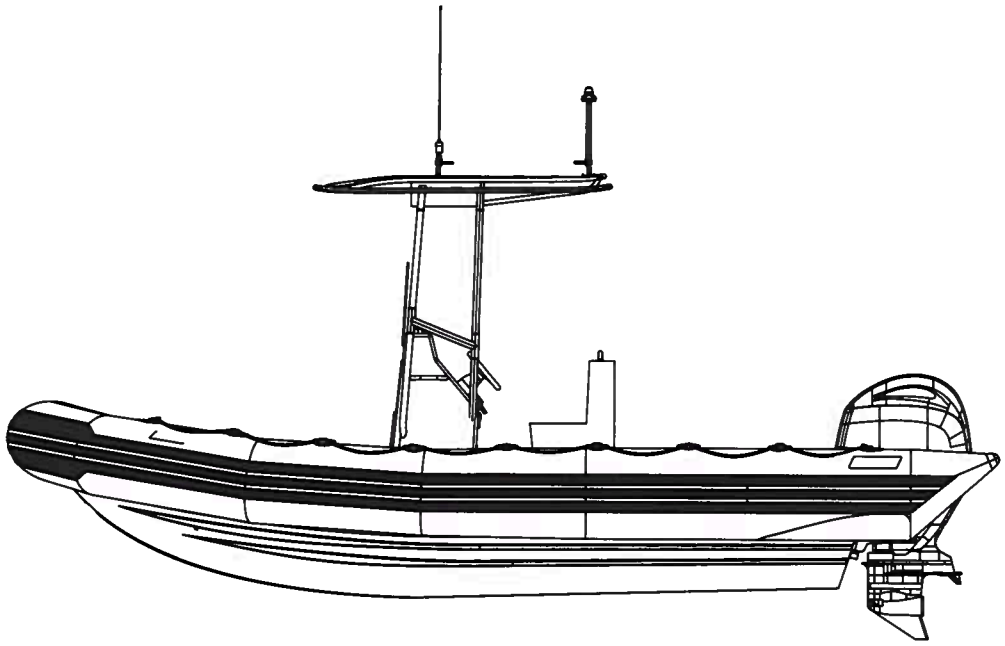

PROPRIETARY INFORMATION
This document contains information proprietary to ZODIAC MILPRO
Unauthorized copying, distribution, or disclosure is strictly prohibited.

ZODIAC MILPRO
540 THOMPSON CREEK ROAD
STEVENSVILLE, MARYLAND 21666

CRAFT: SRR 650 BIDDEFORD FD

TITLE: ZODIAC MILPRO SRR 650

DRAWN	APPROVED	DWG. NO.: DWG# 0556
DRAWNBY	APPROVED	
SHEET# X OF X	Creation Date	CREATION DATE

REV	REVISION

Zodiac of North America, Inc.
1 Year Warranty Certificate

The warranty on this ZODIAC MilPro inflatable boat or rigid hull inflatable boat is limited to the original purchaser who registers their product with Zodiac of North America (ZNA), 540 Thompson Creek Road, Stevensville, MD 21666 within 30 days of first placing the boat into service by returning the completed warranty card to ZNA. This Warranty is transferable, provided the original purchase was registered, and provided written notification of the transfer of the boat is received by Zodiac within 30 days of transfer. Note: Boats built by Zodiac Hurricane Technologies (ZHT) are subject to the terms the ZHT warranty and are not covered by this Zodiac MilPro warranty.

The warranty period inception:
- If the product is sold by a dealer the warranty period begins on the date of sale to the end customer.
- If the boat is sold to the end customer by ZNA, the warranty period begins on the date the boat is placed in service, or one year from the date it is shipped from ZNA, whichever is earlier.
- If the boat is sold to the end customer through a federal contract (e.g. GSA), the warranty period begins on the date the boat is placed in service, or one year from the date it is shipped from ZNA, whichever is earlier.

Zodiac milpro warrants the fabric of the buoyancy tubes, air floors, keels, the transom, transom attachments, and fiberglass hull of the boat to be free from defects in materials and workmanship for a period of 1 (one) year from date of purchase or Zodiac will repair or replace said product (at its sole discretion) at no charge for labor and materials (excluding shipping costs). Zodiac retains the right to substitute comparable product. The air holding seams are warranted to meet the Zodiac manometer standards for a period of 1 (one) year. Zodiac parts, attachments and accessories, unless covered individually by a separate warranty, are warranted to be free from defects in material and structure for a period of 1 (one) year or Zodiac will repair or replace said product (at its sole discretion) at no charge for labor and materials (excluding shipping costs). Zodiac retains the right to substitute comparable product. This warranty will be void if the Hull Identification Number (H IN) plate attached to the transom is changed, defaced or detached in any way.

After inspection of the condition of the boat by an authorized service center, determination of any warranty action will be made by Zodiac of North America.

EXCLUSIONS FROM THIS WARRANTY

a) All inboard and outboard engines, transmissions, jet drives, generators, air conditioning systems, batteries, appliances, antifouling bottom paint and any other components and accessories not manufactured by Zodiac, (See owner's packet received at sale for separate warranty details, if any, on these products.)

b) Misuse, abuse or negligence, including without limitation, improper docking, beaching or towing, collision, punctures, tearing, ripping, abrasion, theft, fire, and over/under inflation of air chambers.

c) Damage received as a result of insertion/extraction, by helicopter, airplane parachute, submarine and the like.

d) Damages or corrosion from abnormal environmental conditions, including but not limited to, corrosive water environment, airborne fallout, tree sap, chemical spills, acid rain, hail, wind storm, lightning, etc.

e) Damages from contact with hydrocarbon products, fuel, gasoline, diesel, JP4/5/8, etc.

f) Damages or corrosion due to lack of maintenance, or premature wearing resulting from improper assembly, over/under inflation, etc.

g) Damages resulting from improper storage.

h) The use of outboard engine in excess of that specified on the capacity plate.

i) Competition usage is not warranted.

j) Damage received through Acts of God, including but not limited to, abnormal water, wind or weather conditions, etc., are not warranted.

k) Damages resulting from improper trailering, lifting, cradling, or improper use of davits.

l) Alteration or tampering, including but not limited to, transom modification, installation of an engine with incorrect shaft length, etc.

m) Normal deterioration, wear, discoloration, dulling, crazing, osmotic blistering and aging of fabrics, metals, woods, plastic or fiberglass gel coat (including spider cracks).

n) Cost of normal maintenance and cleaning.

o) Costs resulting from loss of use, including but not limited to transportation or freight to service centers, rigging/de-rigging.

p) Consequential or incidental damages.

q) Moisture damage to wooden parts, wooden laminates or composite assemblies resulting from failure to maintain the protective coating of these parts (varnish, paint, caulking, etc.)

r) Use of strong detergents or silicone based products (ArmorAll or like agents) placed on the buoyancy tubes will void this warranty.

PROCEDURES

To receive service under this warranty you must take your boat or claimed defective part with proof of purchase (bill of sale) to an authorized service center for inspection during normal working hours. For the location of the nearest service center you may contact us by telephone (410) 643-4141 or our web page www.zodiacmilpro.com or by writing to: Zodiac of North America, 540 Thompson Creek Road, Stevensville, MD 21666. All warranty actions are handled by the service center. To be eligible for warranty determination, you must contact your nearest center within 30 days of occurrence of the claimed defect.

LIMITATION OF LIABILITY AND OTHER IMPORTANT INFORMATION

This warranty is exclusive and in lieu of all other expressed warranties. ALL IMPLIED WARRANTIES, INCLUDING BUT NOT LIMITED TO THE IMPLIED WARRANTIES OF MERCHANTABILITY AND FITNESS FOR A PARTICULAR PURPOSE, ARE SPECIFICALLY DISCLAIMED. If any implied warranties are found to exist, such implied shall not extend beyond the duration of the express warranties provided herein. It is expressly agreed that no warranties can be made by the boat dealer/retailer, except those stated above.

Zodiac Milpro's sole obligation, and your exclusive remedy under this warranty, is limited to repair or replacement in accordance with this warranty.

Zodiac Milpro shall not be liable for any consequential, incidental or contingent damages whatsoever. Some states and provinces do not allow (a) limitation on how long a warranty lasts, or (b) the exclusion or limitation of incidental or consequential damages; so these limitations or exclusions may not apply to you. This warranty gives you specific legal rights, which vary from province to province or state to state.

Zodiac Milpro reserves the right to make changes in the design and material of its inflatable boats without incur- ring any obligation to incorporate such changes in units already completed or in the hands of dealers or consumers. The entire obligation of Zodiac Milpro regarding the sale of its inflatable is stated within this written warranty, except as otherwise provided by law. The distributor, Zodiac of North America, 540 Thompson Creek Road, Stevensville, MD 21666, make these warranties to you.

Zodiac Milpro does not authorize its dealer or any other person to assume for it any other warranty or liability in connection with its products.

This warranty is effective as to all boats sold from September 1, 2006 and supersedes all previous warranties.

1/4/2021

Zodiac of North America, Inc.
540 Thmpson Creek Road, Stevensville, MD 21666
Phone: (410) 643-4141 Fax: (410) 604-0121

FY26 CIP - Capital Projects / Operations Committee Recommendation No. 1 - Summary

Allocation Category	Preliminary Proposal	Committee Recommendation No. 1 (06/11/25)	Balance to be Allocated
Committee Discretion	$ 20,000		$ 20,000
Vehicles[1]	$ 422,300	$ 300,700	$ 121,600
Paving	$ 900,000	$ 500,000	$ 400,000
Project	$ 806,410	$ 35,000	$ 771,410
Fund 001	$ 2,148,710.00	$ 835,700	$ 1,313,010

[1]The Committee authroized the purchase of all recommended vehilcles totaling $422,300, with the following exceptions: Unit 213-Detective and Marine Unit 202-Rescue, be funded from Fund 268 and Fund 202, respectively. This leaves a balance of $121,600.

Fund 268 -	$41,600 for detective vehicle
Fund 202 -	$80,000 for marine Unit 202 (rescue boat)
Fund 601 -	$22,389 Lease pmt for 610 wastewater pump truck
Fund 601 -	$25,000 Lease pmt for camera truck (new)

FY2026 Capital Improvement Projects Recommendation No. 1 (A) - Vehicle Recommendations, General Fund 001

						Capital Projects / Operations Committee Recommendation		
Description	**Year**	**Request**	**Cash or DP**	**Lease**	**Notes**	**Cash or DP**	**Lease**	**Notes**
213 Car for Detective	2010	$ 41,600	$ 41,600					Approved, charge to Asset Forfeiture Account
015 Front End Loader	2009	$ 191,017	$ 75,000	$ 1,202	10-year lease	$ 75,000	$ 1,202	
698 Skid Steer Loader	2003	$ 35,700	$ 35,700			$ 35,700		
Mid Excavator	New	$ 170,000	$ 75,000	$ 985	10-year lease	$ 75,000	$ 985	
698 Mower (to zero steer)	2003	$ 45,000	$ 45,000			$ 45,000		
61 F-600 (Recycling vehicle)	2011	$ 70,000	$ 70,000		Alternatively, repurpose retireing ambulance	$ 70,000		
Marine Unit 202 (rescue boat)	2010	$ 80,000	$ 80,000					Approved, charge to Mooring Fund
328 Fire Truck Pumper	2005	$ 650,000						Approved, authorized to place order
General Fund		$ 1,283,317	$ 422,300	$ 2,187		$ 300,700	$ 2,187	
CIP Vehicle Allocation (Recommened)			$ 422,300			$ 422,300		
Balance			$ -			$ 121,600		Balanace to be allocated in Recommendation No. 2

Description	**Year**	**Request**	**Cash**	**Lease**				
610 Waste Water Pump Truck	2010	$ 180,000		$ 22,386	Lease payment = $1,865/mo	Capital Allocation	$ 22,386	Lease payment = $1,865/mo
Camera Truck (new)		$ 400,000		$ 25,000	Lease payment = $4,166/mo	35102-60603	$ 25,000	Lease payment = $4,166/mo
Wastewater Fund 601		$ 580,000		$ 47,386			$ 47,386	
CIP Vehicle Allocation (Recommended)				$ 47,386			$ 47,386	

FY2026 Capital Improvement Projects Recommendation No. 2 - Vehicle Recommendations, General Fund 001

						Capital Projects / Operations Committee Recommendation		
Description	**Year**	**Request**	**Cash or DP**	**Lease**	**Notes**	**Cash or DP**	**Lease**	**Notes**
004 Fire Dept Service Pick-up	2012	$ 64,000	$ 64,000			$ 64,000.00		
Dropped off list in 2025								
General Fund		$ 64,000	$ 64,000	$ -		$ 64,000	$ -	
CIP Vehicle Allocation (Recommended)			$ 64,000			$ 121,600		
Balance			$ -			$ 57,600		Balanace to be applied to CIP Project Allocation

CIP BUDGET

BIDDEFORD CAPITAL IMPROVEMENT PROGRAM

FY26 Viewing Sheet

PROJECT DESCRIPTION FORM

DEPARTMENT:	*Fire Department*
CIP NAME:	Marine Unit 202 Replacement

CIP NUMBER: *(DEPT-YR-#)*	**BFD-FY26-005**
DEPARTMENT NUMBER	**005**
PROJECT PRIORITY	**1**

ESTIMATED TOTAL COST	$80,000
ESTIMATED COST FY2026	$80,000
ESTIMATED COST FY2027-2030	$

CITY SHARE FY2026	$80,000
CITY SHARE FY2027-2030	$

1. DESCRIPTION OF PROJECT	This project provides funding to replace the existing 1964, 60-year-old aluminum boat that does not meet the safety and rescue needs of our current water conditions.
2. NEED AND IMPACT OF PROJECT	The 1964 aluminum boat is not stable enough or designed to allow rescuers to pull patients/victims from the water into the boat. On average the BFD responds to 12 incidents annually that necessitate the response of a marine unit.
3. CONSISTENCY WITH THE ADOPTED PLANS OR OTHER RELETATED PALNNING DOCS:	The intent of this project is to replace Marine 202, the 1964 aluminum boat with a stable inflatable rigid hull type boat with a 115HP outboard motor. The boat would be on trailer and would be deployed as needed into the river either above or below the dams. This project is part of the FD CIP equipment replacement program.

4. YEARS PREVIOUSLY ON THE BIDDCIP; FUNDING RECVD IN PAST 5 YEARS (IF APPLICABLE)

Reserve/Accrual	Year	FY2021	FY2022	FY2023	FY2024	FY2025
	Funding Recd	$	$	$	$	$

5. NEW PERSONNEL, EQUIPMENT, OR SUPPLIES REQUIRED:	Boat, boat trailer, radios, GPS, other marine electronics, emergency lighting, search lighting.
6. HOW PROJECT ORIGINATED AND HOW COST ESTIMATES WERE OBTAINED:	This project originated with FD Command Staff's review of our current water rescue operational capabilities and level of safety for both the FD/Rescue/EMS providers and the victims and patients we are assisting.
7. ANY RELATED DEPARTMENT OR CITY PROJECTS:	N/A

8. FINANCING POSSIBILITIES (BOND, GRANTS, FUND RAISE, COB, OTHER):

Funding Source	Agency	% Contribution	Dollar Amount	Notes
COB	COB	100%	$80,000	Fund through COB
0	0	%	$	0
0	0	%	$	0
0	0	%	$	0
0	0	%	$	0

9. JUSTIFICATION OF TIMING OF PROJECT AND SEGMENTS (IF APPLICABLE):	N/A
10. OTHER INFO:	N/A

IMPLEMENTATION SCHEDULE (FISCAL YEARS)

	FY2025	FY2026	FY2027	FY2028	FY2029	FUTURE
TOTAL PROJECT COST	$	$80,000	$	$	$	$
NON CITY SHARE	$	$	$	$	$	$
CITY SHARE	**$**	**$80,000**	**$**	**$**	**$**	**$**

ATTACH ON SEPARATE PAGE(S) ANY ADDITIONAL INFO (IF NEED)

0

Finance Committee

Meeting Date: November 18, 2025
Meeting Time: 5:00 PM
Agenda Item No: 4.b
Item Description: Sole Source Procurement Authorization- Used FD Marine Unit
Submitted By: Lawrence D. Best, Fire Chief

Key Terms:
Sole Procurement Authorization – Used Fire Department Marine Unit

Executive Summary:
During the November 6, 2025, Finance Committee meeting, the committee tabled the request for approval from the Fire Department to award the bid for the purchase of a new marine unit and directed the Fire Department to research used marine units that will meet the needs of the Department and bring a recommendation back to the next Finance Committee meeting.

Following the City's Finance Procurement Policy, the Finance Committee first needs to approve a "sole source procurement and reporting exception" following Sec. 2-352 (a) in order to move forward with the recommendation of a used marine unit for the Fire Department.

Detailed Review:
Sec. 2-352. Sole source procurement and reporting exceptions. (a) A contract may be awarded without competition when the Finance Committee determines that there is only one source for the required supply, service or construction item based upon review of the rationale and supporting documentation, if applicable. The City Manager with the appropriate department head or designee shall conduct negotiations, as appropriate, as to price, delivery and terms. Award of sole source contracts shall be in accordance with Sec. 2-348(g).

Funding Source:
No funds are being requested for this authorization.

Staff Recommendation:
Staff recommends the approval of the "sole source procurement and reporting exceptions" for

discussion of the potential purchase of a used marine unit for the Fire Department.

Next Steps:
Approval allows for discussion and guidance on the next agenda item for a used marine unit for the Fire Department.

Attachments:

Finance Committee

Meeting Date:	November 18, 2025
Meeting Time:	5:00 PM
Agenda Item No:	4.c
Item Description:	Approval / Sole Source Procurement Authorization – Purchase Used Marine Unit for the Fire Department
Submitted By:	Lawrence D. Best, Fire Chief

Key Terms:

Executive Summary:
During the November 6, 2025, Finance Committee meeting, the committee tabled the request for approval from the Fire Department to award the bid for the purchase of a new marine unit and directed the Fire Department to research used marine units that will meet the needs of the Department and bring a recommendation back to the next Finance Committee meeting.

The Fire Department reviewed Five (5) used marine units that are for sale in the New England area using the specifications that were established for the bid process to purchase a new marine unit as a basis for comparison.

Using this process, we found the used marine units varied widely when using the specifications for the bid process to purchase a new marine unit.

Using Sec. 2-352. "Sole source procurement and reporting exceptions", the Fire Department presents the following option(s) and recommendation for the purchase of a used marine unit.

Detailed Review:
The Fire Department is providing the following information for discussion on the purchase of a used marine unit.

Note: Life expectancy of a Rigid Hull Inflatable Boat is an estimated 10–15 years depending on materials used, maintenance practices and storage conditions.

Biddeford Fire Department Comparision of available used boats and current specifications from RFP

Biddeford Fire Boat Spec	Notes	19'-22'	Center Console	T-Top with wind screen	45 gallon fuel tank	150 hp power plant "Rigged"	Power Trim	Wear Patches	Hypalon 1670 dtx Five (5) Chamber & Five(5)	Bumper Rub Rail	Electronic bilge pum	Anchor locker	Low bunk twin axle trailer w/stainless brakes	Boarding wear patches	Swim Ladder	Electronics	Price
AB Inflatable 2020	Called broker, does not rec' for rescue services	Y	Y	N	?	Y (225hp)rigged	Y	N	?	N	?	?	N	N	N	Y	119,000
Zodiac 6.5 2020		Y	Y	Y	?	Y (175)rigged	Y	N	?	N	?	?	N	N	N	Y	54,900
Ribcraft 7.8 2015	Power plant has 650 hours	Y-22'	Y	Y/N	?	Y (250hp)rigged	Y	N	Y	N	?	Y	Y	N	N	Y	79,950
Ribcraft 6.5 2019	Both motors have 1500+ hours	Y-22'	Y	Y/N	?	Twin 90ph Yam rigged	Y	N	?	N	?	Y	?	N	N	Y	54,500
Zodiac Open 7	Motor has 60 hours	Y-22'	Y	Y/N	?	Y (250hp)Yam rigged	Y	N	Y	N	?	Y	N	N	N	?	79,995

For Discussion – New Unit Comparison:

- Zodiac Mil-Pro SRR 550 21'11" Rigid Hull Inflatable Center Console with a T-Top and a 150 HP Yamaha outboard motor; The SRR is designed for patrol and intervention duties.
- Electronics included –
    - Navigation light package
    - Garmin VHF 115 Marine Radio
    - Garmin GPSMAP 943xsv MFD
    - Garmin Transducer GT51M-TM
    - Ritchie Compass
    - Rigid Floodlight Package
- Warranty
    - 1 Year buoyancy tubes, air floors, keels, the transom, transom attachments, and fiberglass hull.
    - Electronics and other items not listed above come with a 1 year warranty
- Trailer Status:
    - Ez Loader Aluminum Dual Axel
- Cost = $128,500.00

After reviewing the specs for each boat, the Fire Department staff has determined if the finance committee will only consider the purchase of a used marine unit, then the Fire Department recommends negotiations be entered into the marine unit outlined in option #1 listed above first and if that fails, then proceed with negotiations for option #2 listed above. These units will meet the Fire Department's needs and are options for award of the bid.

The available funds for this CIP purchase are included in the Capital Budget and will come from the Mooring Surplus Fund account. In addition, $45,000 of funds are available from the Stephen and Tabitha King Foundation Grant.

Background/History:

Through the FY26 CIP process, the Fire Department requested funding to replace the existing 1963, 62-year-old aluminum boat that does not meet the safety and rescue needs for our current water conditions. The 1963 aluminum boat is not stable enough or designed to allow rescuers the ability to pull patients/victims from the water into the boat. On average, the BFD

responds to 12 incidents annually that necessitate the response of a marine unit. The estimated budget cost obtained in 2024 for this project was $80,000.00. This CIP request was approved on recommendation by the Acting City Manager. The Capital Projects Committee met on June 11th to review and make allocation recommendations for the FY 26 CIP and again on August 13th to review and approve the allocation of the balance of the funds. On September 2nd, the City Council voted to approve the recommendations made by the Capital Projects Committee which included this new Marine Unit.

After the budget process was completed, the Fire Department successfully submitted and received a grant from the Stephen and Tabitha King Foundation in the amount of $45,000.00 to help with funding for this project. This grant of $45,000.00 was accepted by the City Council on July 15th. The funding source for the $80,000.00 that was included in the budgeting process was decided to be from the Mooring Fund Surplus (Fund 202). The combined total available funds are $125,000.00.

In addition to these available funds, the Fire Department will be requesting approval from the City Council to auction/sell the current 1963 Aluminum Marine 202 unit and trailer, which is valued at an estimated $3,365.00 - $3,790.00 and a second Marine unit, which is a 1996 20-foot Boston Whaler and trailer which is valued at an estimated $19,000 - $21,515.00. The goal would be to have funds from the sale of these boats cover the additional $3,500.00 cost above the $125,000.00 available with the remainder of the sale funds going back into the Mooring Fund Surplus (Fund 202) or other account as deemed appropriate by the City Council.

The June 11th meeting materials, including meeting video and supporting documentation, are available via this link (Capital Projects/Operations Committee (LIVE) • Agendas and Minutes - City of Biddeford, ME • CivicClerk). The August 13th meeting materials, including meeting video and supporting documentation, are available via this link (Capital Projects / Operations Committeee Meeting (Live) • Agendas and Minutes - City of Biddeford, ME • CivicClerk). The City Council approved this CIP project on September 2, 2025, (City Council Meeting (Live) • Agendas and Minutes - City of Biddeford, ME • CivicClerk).

An earlier Capital Projects / Operations Committee Meeting occurred in May to present the FY26 CIP requests. The May meeting materials, including meeting video and supporting documentation, are available via this link (Capital Projects / Operations Committeee Meeting (Live) • Agendas and Minutes - City of Biddeford, ME • CivicClerk

Funding Source:

It is unknown the exact amount being requested at this time because negotiations have not been completed. The funds available for this CIP project are $80,000.00 that can come from the Mooring Fund Surplus (Fund 202), which has a balance of $131,889.17. And $45,000.00 that can come from the Stephen and Tabitha King foundation.

Staff Recommendation:

If requested, staff recommends the approval to move forward with negotiations for a used marine unit outlined in the options above.

Next Steps:

Upon successful negotiations, the appropriate process will be followed according to Sec. 2-348 (g) as outlined in the City's Finance Procurement Policy.

Attachments:

1. Copy of comparisions used Marine unit for FD

Biddeford Fire Department Comparision of available used boats and current specifications from RFP

Biddeford Fire Boat Spec	Notes	19'-22'	Center Console	T-Top with wind screen	45 gallon fuel tank	150 hp power plant "Rigged"	Power Trim	Wear Patches	Hypalon 1670 dtx Five (5) Chamber & Five(5)	Bumper Rub Rail	Electronic bilge pum	Anchor locker	Low bunk twin axle trailer w/stainless brakes	Boarding wear patches	Swim Ladder	Electronics	Price
AB Inflatable 2020	Called broker, does not rec' for rescue services	Y	Y	N	?	Y (225hp)rigged	Y	N	?	N	?	?	N	N	N	Y	119,000
Zodiac 6.5 2020		Y	Y	Y	?	Y (175)rigged	Y	N	?	N	?	?	N	N	N	Y	54,900
Ribcraft 7.8 2015	Power plant has 650 hours	Y-22'	Y	Y/N	?	Y (250hp)rigged	Y	N	Y	N	?	Y	Y	N	N	Y	79,950
Ribcraft 6.5 2019	Both motors have 1500+ hours	Y-22'	Y	Y/N	?	Twin 90ph Yam rigged	Y	N	?	N	?	Y	?	N	N	Y	54,500
Zodiac Open 7	Motor has 60 hours	Y-22'	Y	Y/N	?	Y (250hp)Yam rigged	Y	N	Y	N	?	Y	N	N	N	?	79,995

Finance Committee

Meeting Date: November 18, 2025
Meeting Time: 5:00 PM
Agenda Item No: 4.d
Item Description: Lincoln Street Force Main Valve Vault
Submitted By: Jeff Demers

Key Terms:
Lincoln Street Force Main Valve Vault

Executive Summary:
The purpose of this memorandum is to request the City Finance Committee's approval for the proposed construction activity involving the installation of a **pump station valve box** at the intersection of **Lincoln Street and Pearl Street**.

Detailed Review:
This improvement is necessary to support ongoing infrastructure upgrades to the municipal wastewater system in the area of Lincoln and Pearl Street. The valve box installation will:

- Improve system reliability and accessibility for maintenance within the city's collection system.
- Enhance the citys operational control within the pump station network in this area.
- Helps with the elimination of the need for a new Elm Street pumpstation per prior flow monitoring data and engineering discussions.
- Helps with operational costs and unplanned service disruptions.

All preliminary site assessments have been completed, and the location has been verified as suitable for the installation with no anticipated conflicts with existing utilities. Traffic control and public safety measures will be implemented during construction to minimize disruption.

5. **Sewer Separation Project Contributions**. The Washington, Jefferson, Adams, Franklin Sewer Separation project (the "Sewer Separation Project") includes approximately 3,150 LF of new storm drain, ranging from 15" to 30" in size. The projects will provide conveyance for the separation of approximately 41 catch basins on Adams Street, Jefferson Street, Washington Street, Franklin Street, and Main Street. Once Lincoln Street's sewer (including the WDC projects) is re-routed to Main Street via a new 4" force main, flow will be to the sewer included as part of this Sewer Separation Project such that the WDC Project will benefit from said Sewer Separation Project. The Sewer Separation Project will be tributary to the storm drain on Main Street. Subject to adjustments as a result of the Credit provided for in Section 7, WDC will contribute no more than $420,000 for each WDC Projectwhich shall be due no earlier than the construction loan closing for each WDC project for a combined total not to exceed $840,000 for both WDC projects. WDC shall have the option, but not the obligation, to pay $740,000 at or before the construction loan closing for the first WDC Project in full satisfaction of its obligation to contribute to the Sewer Separation Project for both WDC Projects (the "Sewer Separation Contribution"). In the event that Trust Fund Contribution (as set forth in Section 7 below) is not available at the time of Construction Loan Closing for the first WDC Project or are not awarded to the first WDC Project, then the City agrees to reduce the Sewer Separation Contribution due for the first WDC Project by $200,000.

Funding Source:

A preliminary cost estimate has been prepared based on the Public Works Director's and the City's engineering review See "Exhibit A" and the contractor quote "Exhibit B."

After sitting with the contractor and going through the job details. The City and GSG came up with a total estimated cost with a 5% contingency of $146,527

Funding Source:

This project is proposed to be funded temporarily to get the work done through the Public Works/Engineering – Sewer reserves Fund. Sufficient funds are available in account 35101-40250 with an estimated balance of $789,000.

Funds are to be collected and returned to 35101-40250 through fees associated with the development of Westbrook Development Corporation LLC.

WDC JDA language.

Staff Recommendation:
Approval from the City's Finance Committee to proceed with construction and installation of the pump station valve box at Lincoln and Pearl Street, with associated work being done at Main and Lincoln and Pearl Street. Authorization of the project budget in the amount of **$146,527**.

Next Steps:
Public works will be available for any questions.

Attachments:
1. 2025-09-04_Lincoln Street FM Design Exhibit A
2. Lincoln Street Vault Quote Exhibit B

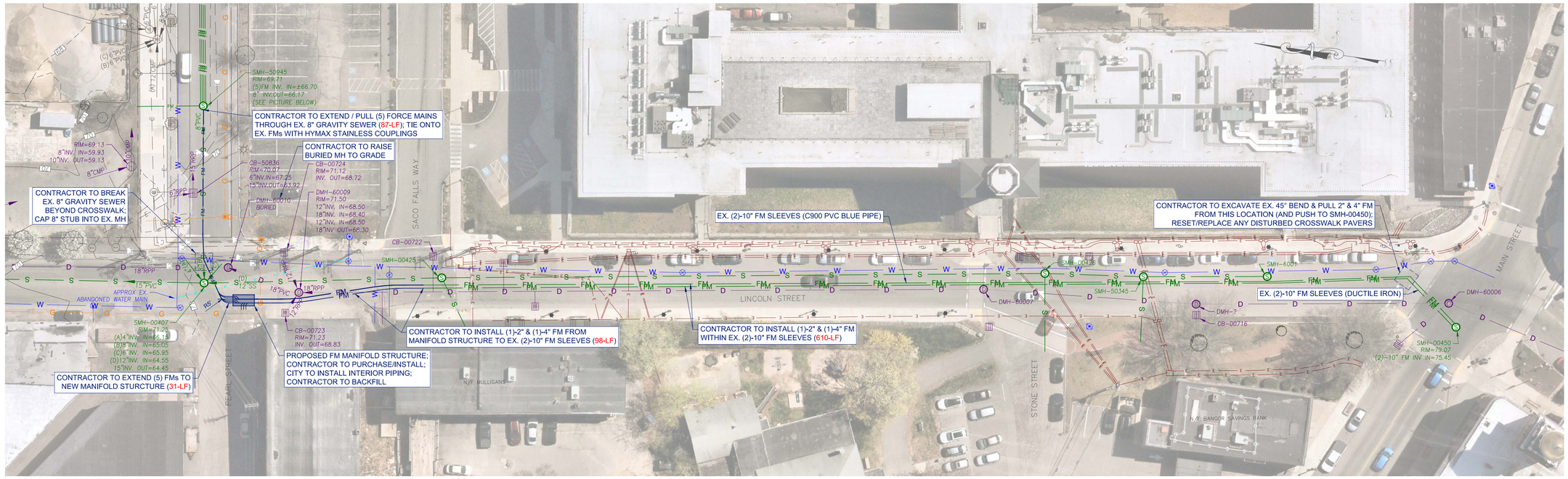

GRAPHIC SCALE IN FEET
0 15 30 60

UTILITY PLAN

SCALE: 1" = 30'

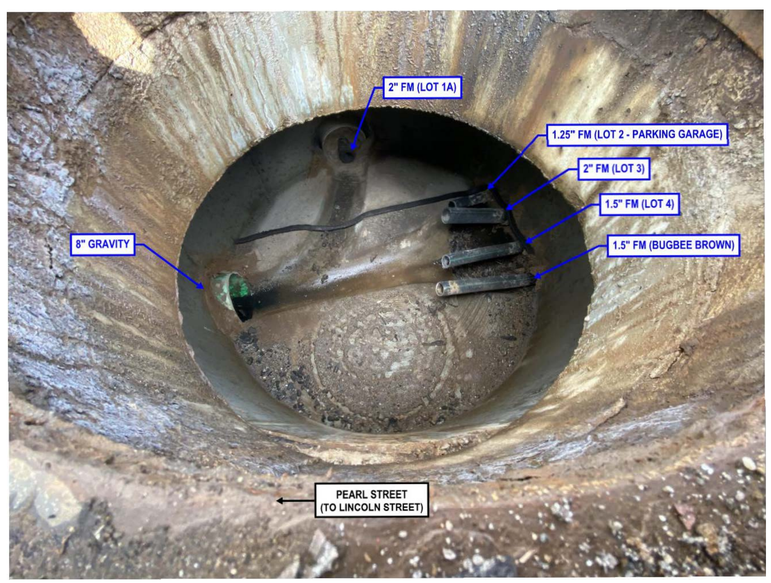

SMH-50945

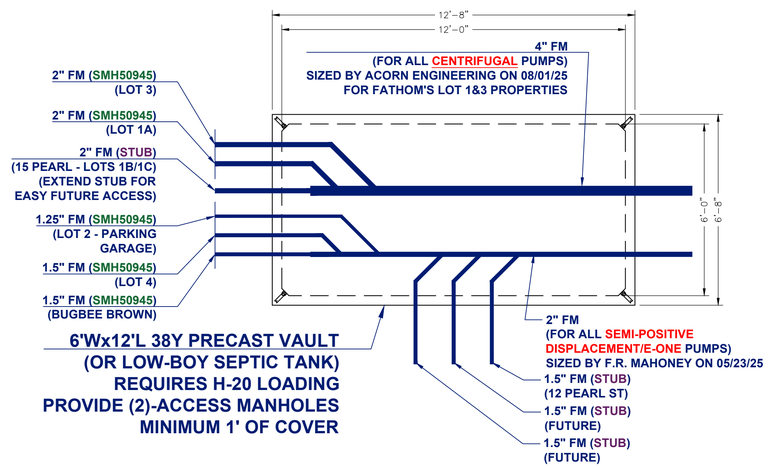

FM MANIFOLD STRUCTURE

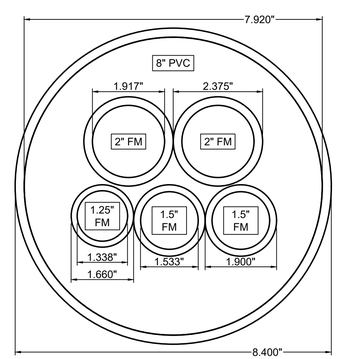

PEARL STREET SEWER CROSS-SECTION

NOTE:

1. ALL PROPOSED FORCE MAINS OUTSIDE MANIFOLD STRUCTURE SHALL BE SDR-11 POLY-ETHYLENE WITH HEAT WELDED JOINTS.
2. CONTRACTOR TO PURCHASE MANIFOLD STRUCTURE; CITY TO INSTALL MANIFOLD INTERIOR PIPING.
3. CITY TO TO PROVIDE ALL ASPHALT PAVING.
4. CONTRACTOR TO PROVIDE 1-WAY ALTERNATING FLAGGING FOR PEARL STREET EXCAVATION; EXCAVATION WORK NEAR MAIN STREET ASSUMED TO BE 1-WAY ROAD CLOSURE.
5. NO EXCAVATION SHALL OCCUR WITHIN THE PEARL STREET SURFACE UPGRADES.
6. HORIZONTAL DATUM: NAD83 MAINE STATE PLANE, WEST, US FOOT (ME83-WF)
7. VERTICAL DATUM: NAVD88

EX. 45° FM CONNECTION (MAIN ST)

No.	REVISIONS	DATE	BY

CITY OF BIDDEFORD, MAINE
ENGINEERING DEPARTMENT
205 MAIN STREET, P.O. BOX 586
BIDDEFORD, MAINE 04005
PHONE: 207-284-9118
WWW.BIDDEFORDMAINE.ORG

PROFESSIONAL CERTIFICATION
I HEREBY CERTIFY THAT THE DOCUMENTS WERE PREPARED OR APPROVED BY ME, THEY ARE TRUE AND CORRECT TO MY PROFESSIONAL KNOWLEDGE AND BELIEF. I AM A DULY LICENSED PROFESSIONAL ENGINEER UNDER THE LAWS OF THE STATE OF MAINE.
LICENSE NO. PE18873
EXPIRATION DATE: 12/31/2025

DRAWING INFO	
DATE	09/04/2025
SCALE	AS SHOWN
DESIGNED BY	CRC
DRAWN BY	–
CHECKED BY	–

UTILITY PLAN

LINCOLN STREET FORCE MAIN
PREPARED FOR
CITY OF BIDDEFORD
BIDDEFORD MAINE

SHEET NUMBER
C-100

Plotted By: Chekan, Craig Sheet: Set-LINCOLN STREET FORCE MAIN Layout: UTILITY PLAN September 04, 2025 03:44:28pm X:_Task Directory\2021\2021-030_Pearl Street Reconstruction - EDA\CAD\Sheets\C-100 - Lincoln Street Design.dwg

939 Parker Farm Road
Buxton, Me 04093
(207) 839-2442 FAX (207) 839-5445
www.GSGRAVEL.com

City of Bideford
P.O.Box Biddeford, ME 04005
Att: Craig Chekan

October 1, 2025

Force main work at Lincoln Street:

- Signs, cones, and barrels for road closed at Lincoln Street
- Traffic flaggers while working in Pearl and Main Streets
- Vacuum excavator to test pit/locate existing utilities in areas of excavation
- Excavate and set trench box/fusing pit in Lincoln Street for fusing five small services to the existing SMH 50945
- Build and install a pulling jig at the existing SMH 50495 to pull pipe from the fusing pit, through the existing 8” sleeve
- Pull five fused services from the pit into the existing SMH 50495
- Tie pipes together within the existing SMH 50945 with Hymax couplings or fused couplings
- Cap existing 8” pipe at SMH 00407
- Excavate a trench in Lincoln Street, approximately 40’, from the fusing pit to the proposed vault
- Supply and installation of a modified 38Y vault with two CMP frames and covers
- Stub 5 services from existing SMH 50945 in the vault
- Excavate a trench in Lincoln Street from the proposed vault, approximately 100’, to the existing 10” sleeves
- Supply and installation of fused 2” & 4” pipes from the vault to the sleeves
- Excavate and set trench box/fusing pit in Lincoln Street for fusing 2” & 4” services
- Remove existing 45° bends at 10” sleeves
- Pull fused 2” & 4” services and terminate in existing SMH 00450
- Supply and installation of gravel and pavement placement only at trench patch restoration areas

$271,000.00

Price based on plans provided by the city on 9/22/25

Excludes street fees, supply of pavement, grinding, conflicting utility repair or relocation (use T&M if required), traffic control in Lincoln St (assumed road closed), over ex, ledge, all work inside vault

Bypass pumping (assumed not active)

City of Biddeford

FY26 YTD BUDGET
REPORT AS OF 11/13/25
36% OF BUDGET

GENERAL FUND

FUND	ORG	OBJECT	ACCOUNT	ACCOUNT DESCRIPTION	TYPE	REVISED ESTIM REV	ACTUAL YTD REVENUE	REMAINING REVENUE	% COLL
001	21101	60101	001-1102-21101-300-951-60101-	Dept Manager Salary Exp	E	$10,000.00	$3,332.80	$6,667.20	33.3
001	21101	60121	001-1102-21101-300-951-60121-	Council/Stipend Expense	E	$10,800.00	$3,779.70	$7,020.30	35.0
001	21101	60251	001-1102-21101-300-951-60251-	Conferences/Training Expense	E	$2,045.00	$0.00	$2,045.00	0.0
001	21101	60256	001-1102-21101-300-951-60256-	Dues/Memberships Expense	E	$3,700.00	$0.00	$3,700.00	0.0
001	21101	60500	001-1102-21101-300-951-60500-	Admin/Office Supp/Eqt Non-Cap	E	$704.00	$0.00	$704.00	0.0
001	21101	60797	001-1102-21101-300-951-60797-	Miscellaneous Expense	E	$11,260.00	$969.50	$10,290.50	8.6
	21101			**Total 21101 Mayor/Council**		$38,509.00	$8,082.00	$30,427.00	21.0
001	21102	60101	001-1102-21102-300-951-60101-	Dept Manager Salary Exp	E	$175,673.08	$103,307.68	$72,365.40	58.8
001	21102	60102	001-1102-21102-300-951-60102-	Mid Mgmt Hrly Employee Wage Ex	E	$145,554.48	$57,858.46	$87,696.02	39.8
001	21102	60105	001-1102-21102-300-951-60105-	F-T Employee Wage Exp	E	$80,304.48	$31,921.82	$48,382.66	39.8
001	21102	60123	001-1102-21102-300-951-60123-	Car Allowance Expense	E	$8,592.32	$4,948.09	$3,644.23	57.6
001	21102	60251	001-1102-21102-300-951-60251-	Conferences/Training Expense	E	$10,016.30	$185.00	$9,831.30	1.8
001	21102	60252	001-1102-21102-300-951-60252-	Travel/Mileage Expense	E	$435.00	$0.00	$435.00	0.0
001	21102	60253	001-1102-21102-300-951-60253-	Food/Lodging Expense	E	$875.00	$30.28	$844.72	3.5
001	21102	60256	001-1102-21102-300-951-60256-	Dues/Memberships Expense	E	$2,870.00	$0.00	$2,870.00	0.0
001	21102	60402	001-1102-21102-300-951-60402-	Phone/Celular/Paging Exp	E	$4,800.00	$0.00	$4,800.00	0.0
001	21102	60500	001-1102-21102-300-951-60500-	Admin/Office Supp/Eqt Non-Cap	E	$2,808.00	$2,722.89	$85.11	97.0
001	21102	60501	001-1102-21102-300-951-60501-	Operating Supp/Eqt Non-Cap	E	$810.00	$0.00	$810.00	0.0
	21102			**Total 21102 City Manager**		$432,738.66	$200,974.22	$231,764.44	46.4
001	21103	60101	001-1103-21103-300-951-60101-	Dept Manager Salary Exp	E	$90,471.58	$35,963.36	$54,508.22	39.8
001	21103	60105	001-1103-21103-300-951-60105-	F-T Employee Wage Exp	E	$263,756.16	$105,687.14	$158,069.02	40.1
001	21103	60111	001-1103-21103-300-951-60111-	Overtime Wage Expense	E	$0.00	$556.93	-$556.93	100.0
001	21103	60251	001-1103-21103-300-951-60251-	Conferences/Training Expense	E	$1,200.00	$60.00	$1,140.00	5.0
001	21103	60252	001-1103-21103-300-951-60252-	Travel/Mileage Expense	E	$950.00	$165.50	$784.50	17.4
001	21103	60256	001-1103-21103-300-951-60256-	Dues/Memberships Expense	E	$120.00	$0.00	$120.00	0.0
001	21103	60500	001-1103-21103-300-951-60500-	Admin/Office Supp/Eqt Non-Cap	E	$3,500.00	$674.11	$2,825.89	19.3
001	21103	60501	001-1103-21103-300-951-60501-	Operating Supp/Eqt Non-Cap	E	$5,834.00	$15.45	$5,818.55	0.3
001	21103	60502	001-1103-21103-300-951-60502-	Printing & Copying Expense	E	$14,500.00	$1,500.00	$13,000.00	10.3
	21103			**Total 21103 City Clerk**		$380,331.74	144,622.49	$235,709.25	38.0
001	21104	60107	001-1103-21104-300-951-60107-	Temp Employee Wage Exp	E	$13,000.00	$11,693.31	$1,306.69	89.9
001	21104	60252	001-1103-21104-300-951-60252-	Travel/Mileage Expense	E	$270.00	$0.00	$270.00	0.0
001	21104	60500	001-1103-21104-300-951-60500-	Admin/Office Supp/Eqt Non-Cap	E	$2,500.00	$111.78	$2,388.22	4.5
001	21104	60502	001-1103-21104-300-951-60502-	Printing & Copying Expense	E	$12,000.00	$5,978.14	$6,021.86	49.8
	21104			**Total 21104 Elections/Voter Registr**		$27,770.00	$17,783.23	$9,986.77	64.0
001	21105	60101	001-1105-21105-300-951-60101-	Dept Manager Salary Exp	E	$117,951.92	$85,348.65	$32,603.27	72.4
001	21105	60102	001-1105-21105-300-951-60102-	Mid Mgmt Hrly Employee Wage Ex	E	$85,327.16	$0.00	$85,327.16	0.0
001	21105	60105	001-1105-21105-300-951-60105-	F-T Employee Wage Exp	E	$87,964.65	$24,994.97	$62,969.68	28.4
001	21105	60251	001-1105-21105-300-951-60251-	Conferences/Training Expense	E	$4,900.00	$307.58	$4,592.42	6.3
001	21105	60252	001-1105-21105-300-951-60252-	Travel/Mileage Expense	E	$500.00	$0.00	$500.00	0.0
001	21105	60253	001-1105-21105-300-951-60253-	Food/Lodging Expense	E	$4,000.00	$0.00	$4,000.00	0.0
001	21105	60256	001-1105-21105-300-951-60256-	Dues/Memberships Expense	E	$580.00	$0.00	$580.00	0.0
001	21105	60306	001-1105-21105-300-951-60306-	Other Prof/Consult Srvs Exp	E	$10,000.00	$10,552.50	-$552.50	105.5
001	21105	60310	001-1105-21105-300-951-60310-	Service Contracts Expense	E	$0.00	$1,296.15	-$1,296.15	100.0
001	21105	60500	001-1105-21105-300-951-60500-	Admin/Office Supp/Eqt Non-Cap	E	$500.00	$424.02	$75.98	84.8
001	21105	60501	001-1105-21105-300-951-60501-	Operating Supp/Eqt Non-Cap	E	$9,000.00	$4,276.29	$4,723.71	47.5
001	21105	60502	001-1105-21105-300-951-60502-	Printing & Copying Expense	E	$500.00	$0.00	$500.00	0.0
	21105			**Total 21105 Assessing**		$321,223.73	$127,200.16	$194,023.57	39.6
001	21106	60101	001-1106-21106-300-951-60101-	Dept Manager Salary Exp	E	$140,538.46	$55,861.17	$84,677.29	39.7
001	21106	60102	001-1106-21106-300-951-60102-	Mid Mgmt Hrly Employee Wage Ex	E	$104,400.00	$37,600.00	$66,800.00	36.0
001	21106	60105	001-1106-21106-300-951-60105-	F-T Employee Wage Exp	E	$209,656.08	$90,678.00	$118,978.08	43.3
001	21106	60111	001-1106-21106-300-951-60111-	Overtime Wage Expense	E	$0.00	$2,120.38	-$2,120.38	100.0
001	21106	60251	001-1106-21106-300-951-60251-	Conferences/Training Expense	E	$6,775.00	-$340.00	$7,115.00	-5.0
001	21106	60252	001-1106-21106-300-951-60252-	Travel/Mileage Expense	E	$0.00	$573.11	-$573.11	100.0
001	21106	60253	001-1106-21106-300-951-60253-	Food/Lodging Expense	E	$0.00	$149.92	-$149.92	100.0
001	21106	60256	001-1106-21106-300-951-60256-	Dues/Memberships Expense	E	$1,345.00	$0.00	$1,345.00	0.0
001	21106	60306	001-1106-21106-300-951-60306-	Other Prof/Consult Srvs Exp	E	$0.00	$37.50	-$37.50	100.0
001	21106	60500	001-1106-21106-300-951-60500-	Admin/Office Supp/Eqt Non-Cap	E	$2,320.00	$221.41	$2,098.59	9.5
	21106			**Total 21106 Finance**		$465,034.54	$186,901.49	$278,133.05	40.2
001	21107	60101	001-1107-21107-300-951-60101-	Dept Manager Salary Exp	E	$115,362.00	$45,857.50	$69,504.50	39.8
001	21107	60251	001-1107-21107-300-951-60251-	Conferences/Training Expense	E	$2,550.00	$3,614.35	-$1,064.35	141.7
001	21107	60252	001-1107-21107-300-951-60252-	Travel/Mileage Expense	E	$350.00	$0.00	$350.00	0.0
001	21107	60256	001-1107-21107-300-951-60256-	Dues/Memberships Expense	E	$150.00	$0.00	$150.00	0.0
001	21107	60305	001-1107-21107-300-951-60305-	Computer Support/Service Exp	E	$15,000.00	$3,525.00	$11,475.00	23.5
001	21107	60452	001-1107-21107-300-951-60452-	Operating Equip Repair Exp	E	$5,000.00	$944.50	$4,055.50	18.9
001	21107	60500	001-1107-21107-300-951-60500-	Admin/Office Supp/Eqt Non-Cap	E	$150.00	$107.75	$42.25	71.8
001	21107	60501	001-1107-21107-300-951-60501-	Operating Supp/Eqt Non-Cap	E	$0.00	$23,327.05	-$23,327.05	100.0
	21107			**Total 21107 Computer Services**		$138,562.00	$77,376.15	$61,185.85	55.8
001	21108	60101	001-1108-21108-300-951-60101-	Dept Manager Salary Exp	E	$115,445.52	$78,609.25	$36,836.27	68.1
001	21108	60105	001-1108-21108-300-951-60105-	F-T Employee Wage Exp	E	$218,655.36	$54,796.62	$163,858.74	25.1
001	21108	60106	001-1108-21108-300-951-60106-	P-T Employee Wage Exp	E	$38,223.45	$16,345.84	$21,877.61	42.8
001	21108	60219	001-1108-21108-300-951-60219-	Incident Initiative	E	$143,600.00	$33,510.86	$110,089.14	23.3
001	21108	60251	001-1108-21108-300-951-60251-	Conferences/Training Expense	E	$10,890.00	$9,389.32	$1,500.68	86.2
001	21108	60254	001-1108-21108-300-951-60254-	E2E Leadership Training	E	$15,550.00	$0.00	$15,550.00	0.0
001	21108	60255	001-1108-21108-300-951-60255-	Other Training	E	$18,644.00	$189.24	$18,454.76	1.0
001	21108	60256	001-1108-21108-300-951-60256-	Dues/Memberships Expense	E	$299.00	$499.00	-$200.00	166.9
001	21108	60320	001-1108-21108-300-951-60320-	Advertising	E	$14,550.00	$5,308.13	$9,241.87	36.5
001	21108	60500	001-1108-21108-300-951-60500-	Admin/Office Supp/Eqt Non-Cap	E	$2,200.00	$1,035.47	$1,164.53	47.1
	21108			**Total 21108 Personnel**		$578,057.33	$199,683.73	$378,373.60	34.5

001	21109	60101	001-1109-21109-300-951-60101-	Dept Manager Salary Exp	E	$129,143.84	$17,443.74	$111,700.10	13.5
001	21109	60102	001-1109-21109-300-951-60102-	Mid Mgmt Hrly Employee Wage Ex	E	$105,402.24	$41,898.43	$63,503.81	39.8
001	21109	60105	001-1109-21109-300-951-60105-	F-T Employee Wage Exp	E	$207,421.92	$82,452.24	$124,969.68	39.8
001	21109	60251	001-1109-21109-300-951-60251-	Conferences/Training Expense	E	$2,000.00	$110.00	$1,890.00	5.5
001	21109	60252	001-1109-21109-300-951-60252-	Travel/Mileage Expense	E	$1,000.00	$0.00	$1,000.00	0.0
001	21109	60253	001-1109-21109-300-951-60253-	Food/Lodging Expense	E	$900.00	$159.04	$740.96	17.7
001	21109	60256	001-1109-21109-300-951-60256-	Dues/Memberships Expense	E	$1,645.00	$0.00	$1,645.00	0.0
001	21109	60306	001-1109-21109-300-951-60306-	Other Prof/Consult Srvs Exp	E	$43,075.00	$500.00	$42,575.00	1.2
001	21109	60500	001-1109-21109-300-951-60500-	Admin/Office Supp/Eqt Non-Cap	E	$1,000.00	$297.85	$702.15	29.8
001	21109	60501	001-1109-21109-300-951-60501-	Operating Supp/Eqt Non-Cap	E	$150.00	$0.00	$150.00	0.0
001	21109	60797	001-1109-21109-300-951-60797-	Miscellaneous Expense	E	$13,250.00	$19.76	$13,230.24	0.1
	21109			**Total 21109 Planning/Economic Devel**		$504,988.00	$142,881.06	$362,106.94	28.3
001	21110	60101	001-1110-21110-300-951-60101-	Dept Manager Salary Exp	E	$104,333.18	$42,123.45	$62,209.73	40.4
001	21110	60102	001-1110-21110-300-951-60102-	Mid Mgmt Hrly Employee Wage Ex	E	$75,293.28	$21,606.27	$53,687.01	28.7
001	21110	60105	001-1110-21110-300-951-60105-	F-T Employee Wage Exp	E	$332,162.21	$123,151.86	$209,010.35	37.1
001	21110	60111	001-1110-21110-300-951-60111-	Overtime Wage Expense	E	$5,500.27	$335.33	$5,164.94	6.1
001	21110	60230	001-1110-21110-300-951-60230-	Clothing/Uniforms Expense	E	$500.00	$341.19	$158.81	68.2
001	21110	60251	001-1110-21110-300-951-60251-	Conferences/Training Expense	E	$2,500.00	$0.00	$2,500.00	0.0
001	21110	60256	001-1110-21110-300-951-60256-	Dues/Memberships Expense	E	$515.00	$0.00	$515.00	0.0
001	21110	60306	001-1110-21110-300-951-60306-	Other Prof/Consult Srvs Exp	E	$500.00	$0.00	$500.00	0.0
001	21110	60411	001-1110-21110-300-951-60411-	Gasoline Expense	E	$1,400.00	$215.55	$1,184.45	15.4
001	21110	60453	001-1110-21110-300-951-60453-	Vehicle Repair/Tires/Oil Exp	E	$3,000.00	$0.00	$3,000.00	0.0
001	21110	60500	001-1110-21110-300-951-60500-	Admin/Office Supp/Eqt Non-Cap	E	$1,400.00	$430.47	$969.53	30.7
001	21110	60501	001-1110-21110-300-951-60501-	Operating Supp/Eqt Non-Cap	E	$382.00	$0.00	$382.00	0.0
001	21110	60797	001-1110-21110-300-951-60797-	Miscellaneous Expense	E	$400.00	$0.00	$400.00	0.0
	21110			**Total 21110 Code Enforcement/Inspec**		$527,885.94	$188,204.12	$339,681.82	35.7
001	21111	60214	001-1106-21111-300-951-60214-	Retiree Health Premiums Expens	E	$205,732.91	$76,990.10	$128,742.81	37.4
001	21111	60256	001-1106-21111-300-951-60256-	Dues/Memberships Expense	E	$357,375.00	$12,000.00	$345,375.00	3.4
001	21111	60259	001-1106-21111-300-951-60259-	Unemployment Comp Exp	E	$7,500.00	$2,392.56	$5,107.44	31.9
001	21111	60301	001-1106-21111-300-951-60301-	Legal Services Expense	E	$100,000.00	$47,879.00	$52,121.00	47.9
001	21111	60302	001-1106-21111-300-951-60302-	Audit Services Expense	E	$81,900.00	$163,746.00	-$81,846.00	199.9
001	21111	60304	001-1106-21111-300-951-60304-	Registry of Deeds Fee Expense	E	$7,700.00	$5,131.83	$2,568.17	66.6
001	21111	60306	001-1106-21111-300-951-60306-	Other Prof/Consult Srvs Exp	E	$20,000.00	$29,104.00	-$9,104.00	145.5
001	21111	60308	001-1106-21111-300-951-60308-	Actuarial Expense	E	$8,000.00	$0.00	$8,000.00	0.0
001	21111	60310	001-1106-21111-300-951-60310-	Service Contracts Expense	E	$28,799.00	$6,199.94	$22,599.06	21.5
001	21111	60315	001-1106-21111-300-951-60315-	User License Expense	E	$913,772.56	$179,134.30	$734,638.26	19.6
001	21111	60319	001-1106-21111-300-951-60319-	Employee Assistance Program Ex	E	$16,400.00	$3,076.80	$13,323.20	18.8
001	21111	60320	001-1106-21111-300-951-60320-	Advertising	E	$24,400.00	$4,919.11	$19,480.89	20.2
001	21111	60325	001-1106-21111-300-951-60325-	Postage/Shipping Expense	E	$26,900.00	$5,070.51	$21,829.49	18.8
001	21111	60370	001-1106-21111-300-951-60370-	Workers Comp Insurance Exp	E	$986,027.00	$135,345.15	$850,681.85	13.7
001	21111	60371	001-1106-21111-300-951-60371-	General Insurance Expense	E	$47,700.00	$73,631.00	-$25,931.00	154.4
001	21111	60372	001-1106-21111-300-951-60372-	Vehicle Insurance Expense	E	$184,187.00	$86,877.00	$97,310.00	47.2
001	21111	60373	001-1106-21111-300-951-60373-	Building/Boiler Insurance Exp	E	$96,145.00	$27,724.00	$68,421.00	28.8
001	21111	60377	001-1106-21111-300-951-60377-	Surety Bonds Expense	E	$1,645.00	$175.00	$1,470.00	10.6
001	21111	60379	001-1106-21111-300-951-60379-	Public Official Liab Insur Exp	E	$32,459.00	$33,448.00	-$989.00	103.0
001	21111	60380	001-1106-21111-300-951-60380-	Police Prof Liab Insur Exp	E	$35,000.00	$48,756.00	-$13,756.00	139.3
001	21111	60383	001-1106-21111-300-951-60383-	Insurance Deductibles	E	$8,000.00	$2,294.00	$5,706.00	28.7
001	21111	60402	001-1106-21111-300-951-60402-	Phone/Celular/Paging Exp	E	$20,000.00	$9,870.63	$9,870.13	50.6
001	21111	60406	001-1106-21111-300-951-60406-	Fiber/Internet Expense	E	$28,320.00	$1,807.70	$26,512.30	6.4
001	21111	60500	001-1106-21111-300-951-60500-	Admin/Office Supp/Eqt Non-Cap	E	$3,700.00	$336.00	$3,364.00	9.1
001	21111	60501	001-1106-21111-300-951-60501-	Operating Supp/Eqt Non-Cap	E	$8,100.00	$453.52	$7,646.48	5.6
001	21111	60502	001-1106-21111-300-951-60502-	Printing & Copying Expense	E	$12,100.00	$4,966.67	$7,133.33	41.0
001	21111	60795	001-1106-21111-300-951-60795-	Personnel Reserve	E	$389,796.30	$205,607.58	$184,188.72	52.7
001	21111	60797	001-1106-21111-300-951-60797-	Miscellaneous Expense	E	$62,000.00	$1,766.18	$60,233.82	2.8
001	21111	60798	001-1106-21111-300-951-60798-	Contingency	E	$700,000.00	$0.00	$700,000.00	0.0
001	21111	60799	001-1106-21111-300-951-60799-	Airport Subsidy Expense	E	$35,000.00	$0.00	$35,000.00	0.0
	21111			**Total 21111 General Administration**		$4,448,658.77	$1,168,702.58	$3,279,696.95	26.3
001	21121	60105	001-1102-21121-300-952-60105-	F-T Employee Wage Exp	E	$52,137.36	$20,725.15	$31,412.21	39.8
001	21121	60111	001-1102-21121-300-952-60111-	Overtime Wage Expense	E	$922.33	$0.00	$922.33	0.0
001	21121	60230	001-1102-21121-300-952-60230-	Clothing Allowance Expense	E	$75.00	$0.00	$75.00	0.0
001	21121	60310	001-1102-21121-300-952-60310-	Service Contracts Expense	E	$46,518.00	$18,956.84	$27,561.16	40.8
001	21121	60400	001-1102-21121-300-952-60400-	Electricity Expense	E	$28,852.00	$12,722.35	$16,129.65	44.1
001	21121	60401	001-1102-21121-300-952-60401-	Water Expense	E	$4,200.00	$825.58	$3,374.42	19.7
001	21121	60404	001-1102-21121-300-952-60404-	Sewer User Fee Expense	E	$3,750.00	$249.39	$3,500.61	6.7
001	21121	60405	001-1102-21121-300-952-60405-	Heating Fuel Expense	E	$22,000.00	$584.57	$21,415.43	2.7
001	21121	60411	001-1102-21121-300-952-60411-	Gasoline Expense	E	$55.00	$0.00	$55.00	0.0
001	21121	60450	001-1102-21121-300-952-60450-	Building Repair/Maint Exp	E	$14,700.00	$4,171.69	$10,528.31	28.4
001	21121	60452	001-1102-21121-300-952-60452-	Operating Equip Repair Exp	E	$200.00	$0.00	$200.00	0.0
001	21121	60453	001-1102-21121-300-952-60453-	Vehicle Repair/Tires/Oil Exp	E	$40.00	$0.00	$40.00	0.0
001	21121	60501	001-1102-21121-300-952-60501-	Operating Supp/Eqt Non-Cap	E	$1,500.00	-$2,840.45	$4,340.45	-189.4
001	21121	60509	001-1102-21121-300-952-60509-	Cleaning Supplies Expense	E	$3,152.61	$638.52	$2,514.09	20.3
	21121			**Total 21121 City Hall Building Exp**		$178,102.30	$56,033.64	$122,068.66	31.5
001	21122	60799	001-1106-21122-300-952-60799-	Private School Transportation	E	$25,136.00	$0.00	$25,136.00	0.0
	21122			**Total 21122 Private Schools**		$25,136.00	$0.00	$25,136.00	0.0
001	21123	60106	001-1124-21123-300-952-60106-	P-T Employee Wage Exp	E	$91,994.20	$26,503.57	$65,490.63	28.8
001	21123	60107	001-1124-21123-300-952-60107-	Temp Employee Wage Exp	E	$0.00	$1,785.78	-$1,785.78	100.0
001	21123	60111	001-1124-21123-300-952-60111-	Overtime Wage Expense	E	$1,456.50	$0.00	$1,456.50	0.0
001	21123	60230	001-1124-21123-300-952-60230-	Clothing Allowance Expense	E	$450.00	$0.00	$450.00	0.0
001	21123	60310	001-1124-21123-300-952-60310-	Service Contracts Expense	E	$18,880.00	$8,489.51	$10,390.49	45.0
001	21123	60330	001-1124-21123-300-952-60330-	Equipment Rent/Lease Exp	E	$500.00	$0.00	$500.00	0.0
001	21123	60400	001-1124-21123-300-952-60400-	Electricity Expense	E	$18,000.00	$0.00	$18,000.00	0.0
001	21123	60401	001-1124-21123-300-952-60401-	Water Expense	E	$3,842.00	$886.85	$2,955.15	23.1
001	21123	60404	001-1124-21123-300-952-60404-	Sewer User Fee Expense	E	$1,500.00	$236.35	$1,263.65	15.8
001	21123	60405	001-1124-21123-300-952-60405-	Heating Fuel Expense	E	$65,682.50	$3,831.47	$61,851.03	5.8
001	21123	60450	001-1124-21123-300-952-60450-	Building Repair/Maint Exp	E	$55,000.00	$54,155.90	$844.10	98.5
001	21123	60454	001-1124-21123-300-952-60454-	Grounds Maint/Improve Exp	E	$3,650.00	$0.00	$3,650.00	0.0
001	21123	60500	001-1124-21123-300-952-60500-	Admin/Office Supp/Eqt Non-Cap	E	$2,000.00	$136.48	$1,863.52	6.8
001	21123	60501	001-1124-21123-300-952-60501-	Operating Supp/Eqt Non-Cap	E	$600.00	$1,861.56	-$1,261.56	310.3
001	21123	60509	001-1124-21123-300-952-60509-	Cleaning Supplies Expense	E	$5,100.00	$0.00	$5,100.00	0.0
	21123			**Total 21123 Community Center**		$268,655.20	$97,887.47	$170,767.73	36.4
001	21124	60101	001-1124-21124-300-952-60101-	Dept Manager Salary Exp	E	$105,403.91	$71,985.33	$33,418.58	68.3
001	21124	60102	001-1124-21124-300-952-60102-	Mid Mgmt Hrly Employee Wage Ex	E	$89,074.08	$5,324.40	$83,749.68	6.0
001	21124	60105	001-1124-21124-300-952-60105-	F-T Employee Wage Exp	E	$505,483.92	$133,079.97	$372,403.95	26.3

001	21124	60106	001-1124-21124-300-952-60106-	P-T Employee Wage Exp	E	$0.00	$19,484.73	-$19,484.73	100.0
001	21124	60107	001-1124-21124-300-952-60107-	Temp Employee Wage Exp	E	$105,100.00	$60,018.30	$45,081.70	57.1
001	21124	60111	001-1124-21124-300-952-60111-	Overtime Wage Expense	E	$0.00	$6,070.51	-$6,070.51	100.0
001	21124	60230	001-1124-21124-300-952-60230-	Clothing Allowance Expense	E	$1,500.00	$4,829.50	-$3,329.50	322.0
001	21124	60251	001-1124-21124-300-952-60251-	Conferences/Training Expense	E	$5,740.00	$407.08	$5,332.92	7.1
001	21124	60252	001-1124-21124-300-952-60252-	Travel/Mileage Expense	E	$5,000.00	$601.16	$4,398.84	12.0
001	21124	60253	001-1124-21124-300-952-60253-	Food/Lodging Expense	E	$3,500.00	$0.00	$3,500.00	0.0
001	21124	60256	001-1124-21124-300-952-60256-	Dues/Memberships Expense	E	$250.00	$0.00	$250.00	0.0
001	21124	60306	001-1124-21124-300-952-60306-	Other Prof/Consult Srvs Exp	E	$0.00	$119.36	-$119.36	100.0
001	21124	60310	001-1124-21124-300-952-60310-	Service Contracts Expense	E	$8,300.00	$2,900.12	$5,399.88	34.9
001	21124	60365	001-1124-21124-300-952-60365-	Recreation Program Expense	E	$10,440.00	$2,900.83	$7,539.17	27.8
001	21124	60400	001-1124-21124-300-952-60400-	Electricity Expense	E	$13,000.00	$19,043.21	-$6,043.21	146.5
001	21124	60402	001-1124-21124-300-952-60402-	Phone/Celular/Paging Exp	E	$8,500.00	$1,884.52	$6,615.48	22.2
001	21124	60405	001-1124-21124-300-952-60405-	Heating Fuel Expense	E	$1,500.00	$0.00	$1,500.00	0.0
001	21124	60410	001-1124-21124-300-952-60410-	Diesel Fuel Expense	E	$2,400.00	$496.31	$1,903.69	20.7
001	21124	60411	001-1124-21124-300-952-60411-	Gasoline Expense	E	$2,250.00	$96.50	$2,153.50	4.3
001	21124	60450	001-1124-21124-300-952-60450-	Building Repair/Maint Exp	E	$8,500.00	$59,461.90	-$50,961.90	699.6
001	21124	60452	001-1124-21124-300-952-60452-	Operating Equip Repair Exp	E	$800.00	$569.96	$230.04	71.2
001	21124	60453	001-1124-21124-300-952-60453-	Vehicle Repair/Tires/Oil Exp	E	$6,000.00	$129.73	$5,870.27	2.2
001	21124	60500	001-1124-21124-300-952-60500-	Admin/Office Supp/Eqt Non-Cap	E	$2,800.00	$300.79	$2,499.21	10.7
001	21124	60501	001-1124-21124-300-952-60501-	Operating Supp/Eqt Non-Cap	E	$13,000.00	$8,095.76	$4,904.24	62.3
001	21124	60502	001-1124-21124-300-952-60502-	Printing & Copying Expense	E	$2,800.00	$157.48	$2,642.52	5.6
001	21124	60509	001-1124-21124-300-952-60509-	Cleaning Supplies Expense	E	$800.00	$1,077.83	-$277.83	134.7
	21124			**Total 21124 Recreation**		$902,141.91	$399,035.28	$503,106.63	44.2
001	21125	60105	001-1103-21125-300-952-60105-	F-T Employee Wage Exp	E	$213,163.92	$104,234.67	$108,929.25	48.9
001	21125	60251	001-1103-21125-300-952-60251-	Conferences/Training Expense	E	$399.00	$0.00	$399.00	0.0
001	21125	60252	001-1103-21125-300-952-60252-	Travel/Mileage Expense	E	$420.00	$0.00	$420.00	0.0
001	21125	60256	001-1103-21125-300-952-60256-	Dues/Memberships Expense	E	$120.00	$0.00	$120.00	0.0
001	21125	60306	001-1103-21125-300-952-60306-	Other Prof/Consult Srvs Exp	E	$6,500.00	$1,311.70	$5,188.30	20.2
001	21125	60402	001-1103-21125-300-952-60402-	Phone/Celular/Paging Exp	E	$0.00	$124.67	-$124.67	100.0
001	21125	60500	001-1103-21125-300-952-60500-	Admin/Office Supp/Eqt Non-Cap	E	$500.00	$0.00	$500.00	0.0
001	21125	60501	001-1103-21125-300-952-60501-	Operating Supp/Eqt Non-Cap	E	$5,500.00	$327.83	$5,172.17	6.0
001	21125	60502	001-1103-21125-300-952-60502-	Printing & Copying Expense	E	$100.00	$0.00	$100.00	0.0
001	21125	60730	001-1103-21125-300-952-60730-	G.A. Electricity Expense	E	$6,000.00	$4,891.51	$1,108.49	81.5
001	21125	60731	001-1103-21125-300-952-60731-	G.A. Client Rent Expense	E	$320,000.00	$133,082.62	$186,917.38	41.6
001	21125	60732	001-1103-21125-300-952-60732-	G.A. Food/Grocery Expense	E	$60,000.00	$9,875.20	$50,124.80	16.5
001	21125	60734	001-1103-21125-300-952-60734-	G.A. Burials Expense	E	$13,000.00	$3,375.00	$9,625.00	26.0
001	21125	60737	001-1103-21125-300-952-60737-	G.A. Telephone Expense	E	$0.00	$71.04	-$71.04	100.0
001	21125	60739	001-1103-21125-300-952-60739-	G.A. Heating Fuel Expense	E	$925.00	$0.00	$925.00	0.0
001	21125	60743	001-1103-21125-300-952-60743-	G.A. Medical Expense	E	$3,108.00	$32.95	$3,075.05	1.1
001	21125	60747	001-1103-21125-300-952-60747-	Seeds of Hope	E	$480,000.00	$128,400.00	$351,600.00	26.8
001	21125	60797	001-1103-21125-300-952-60797-	Miscellaneous Expense	E	$0.00	$0.00	$0.00	0.0
	21125			**Total 21125 Health & Welfare Expens**		$1,109,735.92	$385,727.19	$724,008.73	34.8
001	21128	61199	001-1102-21128-300-952-61199-	Total Muni Svcs Allocation	E	$1,376,487.00	$887,174.21	$489,312.79	64.5
	21128			**Total 21128 Municipal Services**		$1,376,487.00	$887,174.21	$489,312.79	64.5
001	21131	40130	001-1102-21131-300-952-40130-	Cable Franchise Excise Tax Rev	R	-$299,000.00	$0.00	-$299,000.00	0.0
001	21131	40500	001-1102-21131-300-952-40500-	Investment Income Revenue	R	-$700.00	$0.00	-$700.00	0.0
001	21131	60102	001-1102-21131-300-952-60102-	Mid Mgmt Hrly Employee Wage Ex	E	$83,165.04	$33,058.93	$50,106.11	39.8
001	21131	60105	001-1102-21131-300-952-60105-	F-T Employee Wage Exp	E	$70,198.56	$27,239.43	$42,959.13	38.8
001	21131	60106	001-1102-21131-300-952-60106-	P-T Employee Wage Exp	E	$11,347.50	$1,817.90	$9,529.60	16.0
001	21131	60306	001-1102-21131-300-952-60306-	Other Prof/Consult Srvs Exp	E	$72,000.00	$18,000.00	$54,000.00	25.0
001	21131	60320	001-1102-21131-300-952-60320-	Advertising	E	$5,600.00	$1,080.00	$4,520.00	19.3
001	21131	60400	001-1102-21131-300-952-60400-	Electricity Expense	E	$1,920.00	$0.00	$1,920.00	0.0
001	21131	60401	001-1102-21131-300-952-60401-	Water Expense	E	$440.00	$106.10	$333.90	24.1
001	21131	60402	001-1102-21131-300-952-60402-	Phone/Celular/Paging Exp	E	$3,120.00	$371.78	$2,748.22	11.9
001	21131	60404	001-1102-21131-300-952-60404-	Sewer User Fee Expense	E	$140.00	$31.12	$108.88	22.2
001	21131	60405	001-1102-21131-300-952-60405-	Heating Fuel Expense	E	$6,465.00	$0.00	$6,465.00	0.0
001	21131	60406	001-1102-21131-300-952-60406-	Fiber/Internet Expense	E	$960.00	$195.00	$765.00	20.3
001	21131	60450	001-1102-21131-300-952-60450-	Building Repair/Maint Exp	E	$5,000.00	$294.00	$4,706.00	5.9
001	21131	60500	001-1102-21131-300-952-60500-	Admin/Office Supp/Eqt Non-Cap	E	$100.00	$14.04	$85.96	14.0
001	21131	60501	001-1102-21131-300-952-60501-	Operating Supp/Eqt Non-Cap	E	$5,080.00	$196.54	$4,883.46	3.9
001	21131	60509	001-1102-21131-300-952-60509-	Cleaning Supplies Expense	E	$100.00	$0.00	$100.00	0.0
	21131			**Total 21131 Communications**		-$34,063.90	$82,404.84	-$116,468.74	-241.9
001	21141	60101	001-1141-21141-300-953-60101-	Dept Manager Salary Exp	E	$128,172.28	$55,044.88	$73,127.40	42.9
001	21141	60102	001-1141-21141-300-953-60102-	Mid Mgmt Hrly Employee Wage Ex	E	$219,202.90	$65,615.30	$153,587.60	29.9
001	21141	60105	001-1141-21141-300-953-60105-	F-T Employee Wage Exp	E	$3,775,763.18	$1,387,303.29	$2,388,459.89	36.7
001	21141	60107	001-1141-21141-300-953-60107-	Temp Employee Wage Exp	E	$70,000.00	$20,091.46	$49,908.54	28.7
001	21141	60111	001-1141-21141-300-953-60111-	Overtime Wage Expense	E	$565,168.00	$278,080.77	$287,087.23	49.2
001	21141	60112	001-1141-21141-300-953-60112-	Extra Holiday Pay Exp	E	$139,159.00	$55,772.46	$83,386.54	40.1
001	21141	60121	001-1141-21141-300-953-60121-	Annual Stipend Pay Expense	E	$6,000.00	$0.00	$6,000.00	0.0
001	21141	60230	001-1141-21141-300-953-60230-	Clothing Allowance Expense	E	$132,645.00	$33,237.32	$99,407.68	25.1
001	21141	60251	001-1141-21141-300-953-60251-	Conferences/Training Expense	E	$112,500.00	$69,837.89	$42,662.11	62.1
001	21141	60252	001-1141-21141-300-953-60252-	Travel/Mileage Expense	E	$1,000.00	$1,886.40	-$886.40	188.6
001	21141	60253	001-1141-21141-300-953-60253-	Food/Lodging Expense	E	$4,200.00	$4,957.03	-$757.03	118.0
001	21141	60256	001-1141-21141-300-953-60256-	Dues/Memberships Expense	E	$4,427.00	$575.99	$3,851.01	13.0
001	21141	60258	001-1141-21141-300-953-60258-	Hiring Costs/EE Testing Exp	E	$11,375.00	$692.24	$10,682.76	6.1
001	21141	60310	001-1141-21141-300-953-60310-	Service Contracts Expense	E	$77,998.00	$19,629.63	$58,368.37	25.2
001	21141	60325	001-1141-21141-300-953-60325-	Postage/Shipping Expense	E	$400.00	$0.00	$400.00	0.0
001	21141	60400	001-1141-21141-300-953-60400-	Electricity Expense	E	$20,000.00	$0.00	$20,000.00	0.0
001	21141	60401	001-1141-21141-300-953-60401-	Water Expense	E	$3,350.00	$1,116.88	$2,233.12	33.3
001	21141	60402	001-1141-21141-300-953-60402-	Phone/Celular/Paging Exp	E	$16,000.00	$2,443.07	$13,556.93	15.3
001	21141	60404	001-1141-21141-300-953-60404-	Sewer User Fee Expense	E	$3,000.00	$891.83	$2,108.17	29.7
001	21141	60405	001-1141-21141-300-953-60405-	Heating Fuel Expense	E	$22,000.00	$3,278.25	$18,721.75	14.9
001	21141	60410	001-1141-21141-300-953-60410-	Diesel Fuel Expense	E	$31,999.95	$8,101.25	$23,898.70	25.3
001	21141	60411	001-1141-21141-300-953-60411-	Gasoline Expense	E	$11,819.00	$1,851.01	$9,967.99	15.7
001	21141	60450	001-1141-21141-300-953-60450-	Building Repair/Maint Exp	E	$50,517.00	$7,527.24	$42,989.76	14.9
001	21141	60452	001-1141-21141-300-953-60452-	Operating Equip Repair Exp	E	$101,579.00	$14,495.97	$90,296.65	11.1
001	21141	60453	001-1141-21141-300-953-60453-	Vehicle Repair/Tires/Oil Exp	E	$111,025.00	$21,809.91	$89,215.09	19.6
001	21141	60461	001-1141-21141-300-953-60461-	Repair/Maint-CommunsEquip	E	$25,831.00	$375.00	$25,456.00	1.5
001	21141	60465	001-1141-21141-300-953-60465-	Fire Boat Repair/Maint	E	$3,500.00	$0.00	$3,500.00	0.0
001	21141	60500	001-1141-21141-300-953-60500-	Admin/Office Supp/Eqt Non-Cap	E	$5,900.00	$4,079.41	$1,820.59	69.1
001	21141	60501	001-1141-21141-300-953-60501-	Operating Supp/Eqt Non-Cap	E	$9,480.00	$1,685.09	$7,794.91	17.8
001	21141	60508	001-1141-21141-300-953-60508-	Ambulance Supplies Non-Capital	E	$68,790.00	$17,197.57	$51,592.43	25.0
001	21141	60509	001-1141-21141-300-953-60509-	Cleaning Supplies Expense	E	$4,600.00	$953.00	$3,647.00	20.7
	21141			**Total 21141 Fire Dept.**		$5,737,401.31	$2,078,530.14	$3,662,084.79	36.2

001	21142	60230	001-1141-21142-300-953-60230-	Clothing Allowance Expense	E	$3,000.00	$0.00	$3,000.00	0.0
001	21142	60400	001-1141-21142-300-953-60400-	Electricity Expense	E	$1,500.00	$0.00	$1,500.00	0.0
001	21142	60401	001-1141-21142-300-953-60401-	Water Expense	E	$200.00	$47.17	$152.83	23.6
001	21142	60402	001-1141-21142-300-953-60402-	Phone/Celular/Paging Exp	E	$340.00	$0.00	$340.00	0.0
001	21142	60405	001-1141-21142-300-953-60405-	Heating Fuel Expense	E	$3,700.00	$199.69	$3,500.31	5.4
	21142			**Total 21142 Biddeford Pool Fire Dep**		$8,740.00	$246.86	$8,493.14	2.8
001	21144	60101	001-1110-21144-300-953-60101-	Dept Manager Salary Exp	E	$11,592.58	$4,608.13	$6,984.45	39.8
001	21144	60230	001-1110-21144-300-953-60230-	Clothing Allowance Expense	E	$250.00	$0.00	$250.00	0.0
001	21144	60402	001-1110-21144-300-953-60402-	Phone/Celular/Paging Exp	E	$580.00	$0.00	$580.00	0.0
	21144			**Total 21144 Emergency Management**		$12,422.58	$4,608.13	$7,814.45	37.1
001	21145	60335	001-1141-21145-300-953-60335-	Hydrant Rental Expense	E	$733,685.84	$299,158.09	$434,527.75	40.8
	21145			**Total 21145 Hydrant Rental**		$733,685.84	$299,158.09	$434,527.75	40.8
001	21146	60101	001-1146-21146-300-953-60101-	Dept Manager Salary Exp	E	$143,654.40	$60,387.84	$83,266.56	42.0
001	21146	60102	001-1146-21146-300-953-60102-	Mid Mgmt Hrly Employee Wage Ex	E	$120,456.72	$47,342.67	$73,114.05	39.3
001	21146	60105	001-1146-21146-300-953-60105-	F-T Employee Wage Exp	E	$4,326,352.70	$1,401,457.64	$2,924,895.06	32.4
001	21146	60106	001-1146-21146-300-953-60106-	P-T Employee Wage Exp	E	$0.00	$35,863.95	-$35,863.95	100.0
001	21146	60107	001-1146-21146-300-953-60107-	Temp Employee Wage Exp	E	$32,407.85	$263.70	$32,144.15	0.8
001	21146	60111	001-1146-21146-300-953-60111-	Overtime Wage Expense	E	$329,105.45	$267,039.53	$62,065.92	81.1
001	21146	60112	001-1146-21146-300-953-60112-	Extra Holiday Pay Exp	E	$83,532.15	$27,644.80	$55,887.35	33.1
001	21146	60127	001-1146-21146-300-953-60127-	Health Club Dues	E	$960.00	$0.00	$960.00	0.0
001	21146	60230	001-1146-21146-300-953-60230-	Clothing Allowance Expense	E	$74,800.00	$13,926.77	$60,873.23	18.6
001	21146	60251	001-1146-21146-300-953-60251-	Conferences/Training Expense	E	$30,000.00	$15,011.50	$14,988.50	50.0
001	21146	60252	001-1146-21146-300-953-60252-	Travel/Mileage Expense	E	$6,900.00	$1,316.80	$5,583.20	19.1
001	21146	60253	001-1146-21146-300-953-60253-	Food/Lodging Expense	E	$8,250.00	$8,836.63	-$586.63	107.1
001	21146	60256	001-1146-21146-300-953-60256-	Dues/Memberships Expense	E	$1,980.00	$515.00	$1,465.00	26.0
001	21146	60257	001-1146-21146-300-953-60257-	Professional License Fees Exp	E	$7,645.00	$5,540.00	$2,105.00	72.5
001	21146	60306	001-1146-21146-300-953-60306-	Other Prof/Consult Srvs Exp	E	$16,400.00	$5,775.00	$10,625.00	35.2
001	21146	60310	001-1146-21146-300-953-60310-	Service Contracts Expense	E	$0.00	$722.51	-$722.51	100.0
001	21146	60325	001-1146-21146-300-953-60325-	Postage/Shipping Expense	E	$200.00	$272.88	-$72.88	136.4
001	21146	60330	001-1146-21146-300-953-60330-	Equipment Rent/Lease Exp	E	$9,886.00	$3,494.81	$6,391.19	35.4
001	21146	60400	001-1146-21146-300-953-60400-	Electricity Expense	E	$65,208.00	$23,430.43	$41,777.57	35.9
001	21146	60401	001-1146-21146-300-953-60401-	Water Expense	E	$1,000.00	$353.76	$646.24	35.4
001	21146	60404	001-1146-21146-300-953-60404-	Sewer User Fee Expense	E	$800.00	$66.33	$733.67	8.3
001	21146	60405	001-1146-21146-300-953-60405-	Heating Fuel Expense	E	$8,000.00	$2,390.08	$5,609.92	29.9
001	21146	60411	001-1146-21146-300-953-60411-	Gasoline Expense	E	$65,550.00	$10,947.16	$54,602.84	16.7
001	21146	60450	001-1146-21146-300-953-60450-	Building Repair/Maint Exp	E	$20,000.00	$7,788.09	$12,211.91	38.9
001	21146	60452	001-1146-21146-300-953-60452-	Operating Equip Repair Exp	E	$13,736.00	$793.10	$12,942.90	5.8
001	21146	60453	001-1146-21146-300-953-60453-	Vehicle Repair/Tires/Oil Exp	E	$90,000.00	$8,816.37	$81,183.63	9.8
001	21146	60500	001-1146-21146-300-953-60500-	Admin/Office Supp/Eqt Non-Cap	E	$3,500.00	$792.14	$2,707.86	22.6
001	21146	60501	001-1146-21146-300-953-60501-	Operating Supp/Eqt Non-Cap	E	$113,077.00	$63,537.72	$49,539.28	56.2
001	21146	60502	001-1146-21146-300-953-60502-	Printing & Copying Expense	E	$4,500.00	$334.60	$4,165.40	7.4
001	21146	60509	001-1146-21146-300-953-60509-	Cleaning Supplies Expense	E	$7,300.00	$2,735.64	$4,564.36	37.5
001	21146	60603	001-1146-21146-300-953-60603-	Vehicles Purchase Capital	E	$100,000.00	$79,572.00	$20,428.00	79.6
	21146			**Total 21146 Police Dept.**		$5,685,201.27	$2,096,969.45	$3,588,231.82	36.9
001	21147	60105	001-1146-21147-300-953-60105-	F-T Employee Wage Exp	E	$493,719.97	$155,477.69	$338,242.28	31.5
001	21147	60111	001-1146-21147-300-953-60111-	Overtime Wage Expense	E	$50,000.00	$27,391.65	$22,608.35	54.8
001	21147	60112	001-1146-21147-300-953-60112-	Extra Holiday Pay Exp	E	$11,503.01	$1,056.56	$10,446.45	9.2
001	21147	60230	001-1146-21147-300-953-60230-	Clothing Allowance Expense	E	$4,200.00	$114.95	$4,085.05	2.7
001	21147	60251	001-1146-21147-300-953-60251-	Conferences/Training Expense	E	$4,400.00	$0.00	$4,400.00	0.0
001	21147	60256	001-1146-21147-300-953-60256-	Dues/Memberships Expense	E	$400.00	$300.00	$100.00	75.0
001	21147	60500	001-1146-21147-300-953-60500-	Admin/Office Supp/Eqt Non-Cap	E	$500.00	$38.36	$461.64	7.7
001	21147	60501	001-1146-21147-300-953-60501-	Operating Supp/Eqt Non-Cap	E	$16,469.00	$1,825.22	$14,643.78	11.1
	21147			**Total 21147 Police Investigative Se**		$581,191.98	$186,204.43	$394,987.55	32.0
001	21148	60102	001-1146-21148-300-953-60102-	Mid Mgmt Hrly Employee Wage Ex	E	$101,936.16	$39,056.00	$62,880.16	38.3
001	21148	60105	001-1146-21148-300-953-60105-	F-T Employee Wage Exp	E	$1,248,477.84	$451,917.21	$796,560.63	36.2
001	21148	60106	001-1146-21148-300-953-60106-	P-T Employee Wage Exp	E	$32,473.00	$19,509.36	$12,963.64	60.1
001	21148	60111	001-1146-21148-300-953-60111-	Overtime Wage Expense	E	$132,692.03	$66,206.05	$66,485.98	49.9
001	21148	60112	001-1146-21148-300-953-60112-	Extra Holiday Pay Exp	E	$51,740.00	$11,784.96	$39,955.04	22.8
001	21148	60251	001-1146-21148-300-953-60251-	Conferences/Training Expense	E	$3,160.00	$1,089.00	$2,071.00	34.5
001	21148	60252	001-1146-21148-300-953-60252-	Travel/Mileage Expense	E	$3,000.00	$79.86	$2,920.14	2.7
001	21148	60310	001-1146-21148-300-953-60310-	Service Contracts Expense	E	$117,907.58	$88,582.29	$29,325.29	75.1
001	21148	60317	001-1146-21148-300-953-60317-	Translation Expense	E	$5,800.00	$1,040.52	$4,759.48	17.9
001	21148	60400	001-1146-21148-300-953-60400-	Electricity Expense	E	$8,000.00	$1,226.77	$6,773.23	15.3
001	21148	60402	001-1146-21148-300-953-60402-	Phone/Celular/Paging Exp	E	$40,000.00	$10,282.15	$29,717.85	25.7
001	21148	60452	001-1146-21148-300-953-60452-	Operating Equip Repair Exp	E	$3,000.00	$502.50	$2,497.50	16.8
001	21148	60500	001-1146-21148-300-953-60500-	Admin/Office Supp/Eqt Non-Cap	E	$1,000.00	$0.00	$1,000.00	0.0
001	21148	60501	001-1146-21148-300-953-60501-	Operating Supp/Eqt Non-Cap	E	$4,000.00	$325.51	$3,674.49	8.1
	21148			**Total 21148 Police Communications**		$1,753,186.61	$691,602.18	$1,061,584.43	39.4
001	21149	60105	001-1146-21149-300-953-60105-	F-T Employee Wage Exp	E	$51,239.52	$20,272.00	$30,967.52	39.6
001	21149	60111	001-1146-21149-300-953-60111-	Overtime Wage Expense	E	$550.00	$0.00	$550.00	0.0
001	21149	60230	001-1146-21149-300-953-60230-	Clothing Allowance Expense	E	$750.00	$157.90	$592.10	21.1
001	21149	60310	001-1146-21149-300-953-60310-	Service Contracts Expense	E	$32,925.00	$8,231.48	$24,693.52	25.0
001	21149	60402	001-1146-21149-300-953-60402-	Phone/Celular/Paging Exp	E	$500.00	$0.00	$500.00	0.0
001	21149	60411	001-1146-21149-300-953-60411-	Gasoline Expense	E	$875.00	$361.64	$513.36	41.3
001	21149	60453	001-1146-21149-300-953-60453-	Vehicle Repair/Tires/Oil Exp	E	$800.00	$0.00	$800.00	0.0
001	21149	60501	001-1146-21149-300-953-60501-	Operating Supp/Eqt Non-Cap	E	$375.00	$0.00	$375.00	0.0
	21149			**Total 21149 Animal Control Officer**		$88,014.52	$29,023.02	$58,991.50	33.0
001	21150	60400	001-1146-21150-300-953-60400-	Electricity Expense	E	$73,722.00	$52,462.59	$21,259.41	71.2
001	21150	60452	001-1146-21150-300-953-60452-	Operating Equip Repair Exp	E	$100,000.00	$14,894.83	$85,105.17	14.9
	21150			**Total 21150 Street & Traffic Lights**		$173,722.00	$67,357.42	$106,364.58	38.8
001	21161	60101	001-1161-21161-300-954-60101-	Dept Manager Salary Exp	E	$79,201.62	$31,686.16	$47,515.46	40.0
001	21161	60102	001-1161-21161-300-954-60102-	Mid Mgmt Hrly Employee Wage Ex	E	$281,178.01	$172,713.16	$108,464.85	61.4
001	21161	60105	001-1161-21161-300-954-60105-	F-T Employee Wage Exp	E	$873,473.04	$241,548.29	$631,924.75	27.7
001	21161	60111	001-1161-21161-300-954-60111-	Overtime Wage Expense	E	$76,593.91	$46,947.10	$29,646.81	61.3
001	21161	60230	001-1161-21161-300-954-60230-	Clothing Allowance Expense	E	$12,200.00	$5,950.34	$6,249.66	48.8
001	21161	60251	001-1161-21161-300-954-60251-	Conferences/Training Expense	E	$6,000.00	$220.85	$5,779.15	3.7
001	21161	60252	001-1161-21161-300-954-60252-	Travel/Mileage Expense	E	$4,750.00	$1,961.11	$2,788.89	41.3
001	21161	60256	001-1161-21161-300-954-60256-	Dues/Memberships Expense	E	$735.00	$0.00	$735.00	0.0
001	21161	60310	001-1161-21161-300-954-60310-	Service Contracts Expense	E	$11,000.00	$2,939.02	$8,060.98	26.7
001	21161	60325	001-1161-21161-300-954-60325-	Postage/Shipping Expense	E	$190.00	$92.62	$97.38	48.7

001	21161	60400	001-1161-21161-300-954-60400-	Electricity Expense	E	$25,184.53	$6,485.05	$18,699.48	25.8
001	21161	60401	001-1161-21161-300-954-60401-	Water Expense	E	$5,127.00	$1,452.20	$3,674.80	28.3
001	21161	60402	001-1161-21161-300-954-60402-	Phone/Celular/Paging Exp	E	$15,000.00	$5,353.56	$9,646.44	35.7
001	21161	60404	001-1161-21161-300-954-60404-	Sewer User Fee Expense	E	$4,800.00	$396.45	$4,403.55	8.3
001	21161	60405	001-1161-21161-300-954-60405-	Heating Fuel Expense	E	$26,750.00	$1,050.43	$25,699.57	3.9
001	21161	60411	001-1161-21161-300-954-60411-	Gasoline Expense	E	$18,144.00	$2,249.14	$15,894.86	12.4
001	21161	60450	001-1161-21161-300-954-60450-	Building Repair/Maint Exp	E	$13,500.00	$1,726.70	$11,773.30	12.8
001	21161	60452	001-1161-21161-300-954-60452-	Operating Equip Repair Exp	E	$12,000.00	$9,669.47	$2,330.53	80.6
001	21161	60453	001-1161-21161-300-954-60453-	Vehicle Repair/Tires/Oil Exp	E	$14,000.00	$8,485.61	$5,514.39	60.6
001	21161	60461	001-1161-21161-300-954-60461-	Repair/Maint-CommunsEquip	E	$2,000.00	$0.00	$2,000.00	0.0
001	21161	60500	001-1161-21161-300-954-60500-	Admin/Office Supp/Eqt Non-Cap	E	$16,310.00	$600.29	$15,709.71	3.7
001	21161	60501	001-1161-21161-300-954-60501-	Operating Supp/Eqt Non-Cap	E	$5,950.00	$1,671.22	$4,278.78	28.1
001	21161	60505	001-1161-21161-300-954-60505-	Construction Supplies	E	$2,500.00	$0.00	$2,500.00	0.0
001	21161	60506	001-1161-21161-300-954-60506-	Equipment/Small Tools-Non-cap	E	$20,500.00	$5,674.87	$14,825.13	27.7
001	21161	60509	001-1161-21161-300-954-60509-	Cleaning Supplies Expense	E	$4,300.00	$347.86	$3,952.14	8.1
001	21161	60797	001-1161-21161-300-954-60797-	Miscellaneous Expense	E	$1,225.00	$0.00	$1,225.00	0.0
	21161			**Total 21161 PW Admin/Fleet Maint. E**		$1,532,612.11	$549,221.50	$983,390.61	35.8
001	21162	60105	001-1161-21162-300-954-60105-	F-T Employee Wage Exp	E	$948,891.60	$353,543.09	$595,348.51	37.3
001	21162	60111	001-1161-21162-300-954-60111-	Overtime Wage Expense	E	$115,000.00	$28,400.61	$86,599.39	24.7
001	21162	60230	001-1161-21162-300-954-60230-	Clothing Allowance Expense	E	$18,050.00	$5,444.64	$12,605.36	30.2
001	21162	60312	001-1161-21162-300-954-60312-	Temporary Agency Help Exp	E	$24,000.00	$0.00	$24,000.00	0.0
001	21162	60313	001-1161-21162-300-954-60313-	Construction Services Expense	E	$28,000.00	$2,999.26	$25,000.74	10.7
001	21162	60346	001-1161-21162-300-954-60346-	Removal of Trees & Stumps	E	$20,000.00	$24,675.00	-$4,675.00	123.4
001	21162	60410	001-1161-21162-300-954-60410-	Diesel Fuel Expense	E	$81,139.00	$14,240.12	$66,898.88	17.6
001	21162	60411	001-1161-21162-300-954-60411-	Gasoline Expense	E	$12,915.00	$2,001.57	$10,913.43	15.5
001	21162	60453	001-1161-21162-300-954-60453-	Vehicle Repair/Tires/Oil Exp	E	$192,415.00	$27,485.00	$164,930.00	14.3
001	21162	60457	001-1161-21162-300-954-60457-	Road Maint/Improve Non-Cap	E	$60,000.00	$18,250.56	$41,749.44	30.4
001	21162	60462	001-1161-21162-300-954-60462-	Road Painting Expense	E	$111,888.00	$106,868.69	$5,019.31	95.5
001	21162	60501	001-1161-21162-300-954-60501-	Operating Supp/Eqt Non-Cap	E	$7,000.00	$0.00	$7,000.00	0.0
001	21162	60503	001-1161-21162-300-954-60503-	Road Salt Expense	E	$275,000.00	$3,153.72	$271,846.28	1.1
001	21162	60505	001-1161-21162-300-954-60505-	Construction Supplies	E	$22,500.00	$9,144.75	$13,355.25	40.6
001	21162	60506	001-1161-21162-300-954-60506-	Equipment/Small Tools-Non-cap	E	$12,700.00	$2,183.67	$10,516.33	17.2
001	21162	60507	001-1161-21162-300-954-60507-	Street Signs Expense	E	$21,000.00	$7,876.04	$13,123.96	37.5
	21162			**Total 21162 Public Works Roads Main**		$1,950,498.60	$606,266.72	$1,344,231.88	31.1
001	21164	60102	001-1161-21164-300-954-60102-	Mid Mgmt Hrly Employee Wage Ex	E	$73,523.28	$37,758.07	$35,765.21	51.4
001	21164	60105	001-1161-21164-300-954-60105-	F-T Employee Wage Exp	E	$327,983.04	$118,351.71	$209,631.33	36.1
001	21164	60111	001-1161-21164-300-954-60111-	Overtime Wage Expense	E	$32,500.00	$19,601.18	$12,898.82	60.3
001	21164	60230	001-1161-21164-300-954-60230-	Clothing Allowance Expense	E	$6,650.00	$2,658.90	$3,991.10	40.0
001	21164	60311	001-1161-21164-300-954-60311-	Operations Contracts Expense	E	$550,204.00	$131,793.28	$418,410.72	24.0
001	21164	60313	001-1161-21164-300-954-60313-	Construction Services Expense	E	$4,500.00	$0.00	$4,500.00	0.0
001	21164	60340	001-1161-21164-300-954-60340-	Waste Tipping Fee Expense	E	$388,988.00	$140,098.22	$248,889.78	36.0
001	21164	60341	001-1161-21164-300-954-60341-	Non-Burnable Disposal Exp	E	$37,000.00	$37,925.69	-$925.69	102.5
001	21164	60345	001-1161-21164-300-954-60345-	Rodent Control Expense	E	$1,100.00	$0.00	$1,100.00	0.0
001	21164	60410	001-1161-21164-300-954-60410-	Diesel Fuel Expense	E	$48,338.00	$16,046.06	$32,291.94	33.2
001	21164	60412	001-1161-21164-300-954-60412-	Bottled Gas Expense	E	$1,600.00	$172.96	$1,427.04	10.8
001	21164	60452	001-1161-21164-300-954-60452-	Operating Equip Repair Exp	E	$5,500.00	$125.00	$5,375.00	2.3
001	21164	60453	001-1161-21164-300-954-60453-	Vehicle Repair/Tires/Oil Exp	E	$41,600.00	$9,437.06	$32,162.94	22.7
001	21164	60501	001-1161-21164-300-954-60501-	Operating Supp/Eqt Non-Cap	E	$4,150.00	$2,564.34	$1,585.66	61.8
001	21164	60502	001-1161-21164-300-954-60502-	Printing & Copying Expense	E	$6,500.00	$0.00	$6,500.00	0.0
001	21164	60506	001-1161-21164-300-954-60506-	Equipment/Small Tools-Non-cap	E	$1,300.00	$458.89	$841.11	35.3
001	21164	60797	001-1161-21164-300-954-60797-	Miscellaneous Expense	E	$10,350.00	$829.97	$9,520.03	8.0
	21164			**Total 21164 Solid Waste Management**		$1,541,786.32	$517,821.33	$1,023,964.99	33.6
001	21165	60102	001-1161-21165-300-954-60102-	Mid Mgmt Hrly Employee Wage Ex	E	$76,406.81	$41,309.67	$35,097.14	54.1
001	21165	60105	001-1161-21165-300-954-60105-	F-T Employee Wage Exp	E	$278,977.68	$107,430.77	$171,546.91	38.5
001	21165	60106	001-1161-21165-300-954-60106-	P-T Employee Wage Exp	E	$74,667.50	$12,732.50	$61,935.00	17.1
001	21165	60111	001-1161-21165-300-954-60111-	Overtime Wage Expense	E	$26,300.00	$9,656.85	$16,643.15	36.7
001	21165	60230	001-1161-21165-300-954-60230-	Clothing Allowance Expense	E	$6,450.00	$4,955.47	$1,494.53	76.8
001	21165	60313	001-1161-21165-300-954-60313-	Construction Services Expense	E	$30,000.00	$8,539.85	$21,460.15	28.5
001	21165	60400	001-1161-21165-300-954-60400-	Electricity Expense	E	$8,250.00	$3,651.91	$4,598.09	44.3
001	21165	60401	001-1161-21165-300-954-60401-	Water Expense	E	$10,500.00	$15,208.24	-$4,708.24	144.8
001	21165	60404	001-1161-21165-300-954-60404-	Sewer User Fee Expense	E	$3,000.00	$132.91	$2,867.09	4.4
001	21165	60410	001-1161-21165-300-954-60410-	Diesel Fuel Expense	E	$8,000.00	$759.89	$7,240.11	9.5
001	21165	60411	001-1161-21165-300-954-60411-	Gasoline Expense	E	$11,373.00	$1,512.16	$9,860.84	13.3
001	21165	60450	001-1161-21165-300-954-60450-	Building Repair/Maint Exp	E	$1,500.00	$0.00	$1,500.00	0.0
001	21165	60453	001-1161-21165-300-954-60453-	Vehicle Repair/Tires/Oil Exp	E	$31,500.00	$6,921.46	$24,578.54	22.0
001	21165	60454	001-1161-21165-300-954-60454-	Grounds Maint/Improve Exp	E	$47,910.00	$20,114.47	$27,795.53	42.0
001	21165	60500	001-1161-21165-300-954-60500-	Admin/Office Supp/Eqt Non-Cap	E	$2,425.00	$219.16	$2,205.84	9.0
001	21165	60501	001-1161-21165-300-954-60501-	Operating Supp/Eqt Non-Cap	E	$1,400.00	$787.79	$612.21	56.3
001	21165	60505	001-1161-21165-300-954-60505-	Construction Supplies	E	$4,550.00	$581.92	$3,968.08	12.8
001	21165	60506	001-1161-21165-300-954-60506-	Equipment/Small Tools-Non-cap	E	$9,000.00	$899.98	$8,100.02	10.0
001	21165	60509	001-1161-21165-300-954-60509-	Cleaning Supplies Expense	E	$2,000.00	$32.61	$1,967.39	1.6
	21165			**Total 21165 Parks Maintenance**		$634,209.99	$235,447.61	$398,762.38	37.1
001	21166	60101	001-1161-21166-300-954-60101-	Dept Manager Salary Exp	E	$4,015.00	$4,014.00	$1.00	100.0
001	21166	60107	001-1161-21166-300-954-60107-	Temp Employee Wage Exp	E	$24,978.00	$11,083.50	$13,894.50	44.4
001	21166	60310	001-1161-21166-300-954-60310-	Service Contracts Expense	E	$4,300.00	$0.00	$4,300.00	0.0
001	21166	60400	001-1161-21166-300-954-60400-	Electricity Expense	E	$400.00	$301.42	$98.58	75.4
001	21166	60401	001-1161-21166-300-954-60401-	Water Expense	E	$275.00	$136.21	$138.79	49.5
001	21166	60402	001-1161-21166-300-954-60402-	Phone/Celular/Paging Exp	E	$324.00	$0.00	$324.00	0.0
001	21166	60410	001-1161-21166-300-954-60410-	Diesel Fuel Expense	E	$346.00	$74.72	$271.28	21.6
001	21166	60411	001-1161-21166-300-954-60411-	Gasoline Expense	E	$460.00	$94.15	$365.85	20.5
001	21166	60450	001-1161-21166-300-954-60450-	Building Repair/Maint Exp	E	$375.00	$0.00	$375.00	0.0
001	21166	60452	001-1161-21166-300-954-60452-	Operating Equip Repair Exp	E	$1,800.00	$252.37	$1,547.63	14.0
001	21166	60454	001-1161-21166-300-954-60454-	Grounds Maint/Improve Exp	E	$900.00	$0.00	$900.00	0.0
001	21166	60457	001-1161-21166-300-954-60457-	Road Maint/Improve Non-Cap	E	$5,000.00	$4,811.36	$188.64	96.2
001	21166	60501	001-1161-21166-300-954-60501-	Operating Supp/Eqt Non-Cap	E	$125.00	$0.00	$125.00	0.0
001	21166	60506	001-1161-21166-300-954-60506-	Equipment/Small Tools-Non-cap	E	$850.00	$93.96	$756.04	11.1
	21166			**Total 21166 Cemetery**		$44,148.00	$20,861.69	$23,286.31	47.3
001	21167	60101	001-1161-21167-300-954-60101-	Dept Manager Salary Exp	E	$118,890.72	$47,260.18	$71,630.54	39.8
001	21167	60105	001-1161-21167-300-954-60105-	F-T Employee Wage Exp	E	$121,034.05	$48,112.22	$72,921.83	39.8
001	21167	60230	001-1161-21167-300-954-60230-	Clothing Allowance Expense	E	$800.00	$0.00	$800.00	0.0
001	21167	60251	001-1161-21167-300-954-60251-	Conferences/Training Expense	E	$1,000.00	$0.00	$1,000.00	0.0
001	21167	60252	001-1161-21167-300-954-60252-	Travel/Mileage Expense	E	$750.00	$0.00	$750.00	0.0
001	21167	60256	001-1161-21167-300-954-60256-	Dues/Memberships Expense	E	$325.00	$0.00	$325.00	0.0
001	21167	60257	001-1161-21167-300-954-60257-	Professional License Fees Exp	E	$800.00	$120.00	$680.00	15.0

001	21167	60304	001-1161-21167-300-954-60304-	Registry of Deeds Fee Expense	E	$100.00	$0.00	$100.00	0.0
001	21167	60306	001-1161-21167-300-954-60306-	Other Prof/Consult Srvs Exp	E	$37,500.00	$19,664.82	$17,835.18	52.4
001	21167	60310	001-1161-21167-300-954-60310-	Service Contracts Expense	E	$4,480.00	$390.41	$4,089.59	8.7
001	21167	60402	001-1161-21167-300-954-60402-	Phone/Celular/Paging Exp	E	$1,250.00	$549.56	$700.44	44.0
001	21167	60411	001-1161-21167-300-954-60411-	Gasoline Expense	E	$400.00	$75.90	$324.10	19.0
001	21167	60452	001-1161-21167-300-954-60452-	Operating Equip Repair Exp	E	$875.00	$0.00	$875.00	0.0
001	21167	60453	001-1161-21167-300-954-60453-	Vehicle Repair/Tires/Oil Exp	E	$500.00	$0.00	$500.00	0.0
001	21167	60500	001-1161-21167-300-954-60500-	Admin/Office Supp/Eqt Non-Cap	E	$1,300.00	$0.00	$1,300.00	0.0
001	21167	60501	001-1161-21167-300-954-60501-	Operating Supp/Eqt Non-Cap	E	$2,000.00	$436.80	$1,563.20	21.8
001	21167	60502	001-1161-21167-300-954-60502-	Printing & Copying Expense	E	$150.00	$0.00	$150.00	0.0
001	21167	60797	001-1161-21167-300-954-60797-	Miscellaneous Expense	E	$56,000.00	$13,128.34	$42,871.66	23.4
	21167			**Total 21167 Engineering**		$348,154.77	$129,738.23	$218,416.54	37.3
001	21168	60102	001-1161-21168-300-954-60102-	Mid Mgmt Hrly Employee Wage Ex	E	$78,989.04	$31,398.91	$47,590.13	39.8
001	21168	60251	001-1161-21168-300-954-60251-	Conferences/Training Expense	E	$800.00	$0.00	$800.00	0.0
001	21168	60252	001-1161-21168-300-954-60252-	Travel/Mileage Expense	E	$170.00	$0.00	$170.00	0.0
001	21168	60256	001-1161-21168-300-954-60256-	Dues/Memberships Expense	E	$250.00	$0.00	$250.00	0.0
001	21168	60257	001-1161-21168-300-954-60257-	Professional License Fees Exp	E	$275.00	$0.00	$275.00	0.0
001	21168	60306	001-1161-21168-300-954-60306-	Other Prof/Consult Srvs Exp	E	$320.00	$0.00	$320.00	0.0
001	21168	60500	001-1161-21168-300-954-60500-	Admin/Office Supp/Eqt Non-Cap	E	$75.00	$0.00	$75.00	0.0
001	21168	60501	001-1161-21168-300-954-60501-	Operating Supp/Eqt Non-Cap	E	$1,020.00	$0.00	$1,020.00	0.0
	21168			**Total 21168 GIS Division**		$81,899.04	$31,398.91	$50,500.13	38.3
001	21179	60129	001-1106-21179-300-951-60129-	Insurance Buyout Pay	E	$37,810.00	$15,288.85	$22,521.15	40.4
001	21179	60201	001-1106-21179-300-951-60201-	FICA/Medicare-ER Share Exp	E	$1,578,448.24	$561,716.95	$1,016,731.29	35.6
001	21179	60202	001-1106-21179-300-951-60202-	MPERS-Employer Share Exp	E	$1,635,611.91	$774,775.28	$860,836.63	47.4
001	21179	60203	001-1106-21179-300-951-60203-	457 Plan-Employer Share Exp	E	$182,328.56	$57,279.04	$125,049.52	31.4
001	21179	60210	001-1106-21179-300-951-60210-	HPHC Ins Employer Share Exp	E	$1,934,924.20	$701,335.64	$1,233,588.56	36.2
001	21179	60211	001-1106-21179-300-951-60211-	NNEBT Ins Employer Share Exp	E	$2,522,962.79	$748,665.87	$1,774,296.92	29.7
001	21179	60212	001-1106-21179-300-951-60212-	S-T Disability ER Share Exp	E	$7,209.91	$4,517.63	$2,692.28	62.7
001	21179	60213	001-1106-21179-300-951-60213-	L-T Disability ER Share Exp	E	$5,833.35	$1,886.31	$3,947.04	32.3
001	21179	60217	001-1106-21179-300-951-60217-	RHSA Plan ER Share	E	$187,828.88	$56,516.55	$131,312.33	30.1
001	21179	60218	001-1106-21179-300-951-60218-	College Reimbursment	E	$24,600.00	$8,900.00	$15,700.00	36.2
	21179			**Total 21179 Fringe Benefits**		$8,117,557.84	$2,930,882.12	$5,186,675.72	36.1
001	21181	60749	001-1102-21181-300-955-60749-	County Tax Expense	E	$1,808,299.13	$1,819,371.00	-$11,071.87	100.6
	21181			**Total 21181 County Tax**		$1,808,299.13	$1,819,371.00	-$11,071.87	100.6
001	21185	60750	001-1106-21185-400-958-60750-	Bond Principal Expense	E	$2,184,749.94	$1,797,323.71	$387,426.23	82.3
001	21185	60754	001-1106-21185-400-958-60754-	Lease Principal Expense	E	$1,197,231.84	$158,211.30	$1,039,020.54	13.2
	21185			**Total 21185 Debt Service - Principa**		$3,381,981.78	$1,955,535.01	$1,426,446.77	57.8
001	21186	60751	001-1106-21186-400-958-60751-	Bond Interest Expense	E	$871,848.69	$413,358.47	$458,490.22	47.4
001	21186	60755	001-1106-21186-400-958-60755-	Lease Interest Expense	E	$159,345.00	$5,661.71	$153,683.29	3.6
	21186			**Total 21186 Debt Service - Interest**		$1,031,193.69	$419,020.18	$612,173.51	40.6
001	21199	60799	001-1106-21199-600-959-60799-	Transfers out to Other Funds	E	$150,000.00	$0.00	$150,000.00	0.0
	21199			**Total 21199 Transfers Out**		$150,000.00	$0.00	$150,000.00	0.0
001	21201	60900	001-1102-21201-500-951-60900-	CIP Budget Holding	E	$2,148,710.00	$0.00	$2,148,710.00	0.0
001	21201	60907	001-1102-21201-500-951-60907-	IT Improvements	E	$0.00	$300.00	-$300.00	100.0
	21201			**Total 21201 CIP General Government**		$2,148,710.00	$300.00	$2,148,410.00	0.0
001	21203	60995	001-1102-21203-500-953-60995-	FD Equipment	E	$0.00	$7,489.00	-$7,489.00	100.0
				Total 21203 CIP Public Safety		$0.00	$7,489.00	-$7,489.00	100.0
001	21204	60602	001-1102-21204-500-954-60602-	14 Foot Mower Attachment	E	$0.00	$12,324.91	-$12,324.91	100.0
				Total 21204 CIP Public Works		$0.00	$12,324.91	-$12,324.91	100.0
001	21210	40999	001-1102-24151-500-957-40999-	Use of Undesignated Fund Balan	R	-$500,000.00	$0.00	-$500,000.00	0.0
	21210			**Total 21210 Use of Prior Year F/B-C**		-$500,000.00	$0.00	-$500,000.00	0.0
001	21302	60107	001-1300-21302-300-956-60107-	Temp Employee Wage Exp	E	$0.00	$3,060.00	-$3,060.00	100.0
				Total 21302 Crossing Guards		$0.00	$3,060.00	-$3,060.00	100.0
001	24101	40100	001-4001-24101-998-971-40100-	Current Property Tax Revenue	R	-$66,123,811.01	-$66,610,605.20	$66,610,605.20	100.0
001	24101	40110	001-4001-24101-998-971-40110-	Tax Interest Revenue	R	-$100,000.00	-$29,733.17	-$70,266.83	29.7
001	24101	40111	001-4001-24101-998-971-40111-	Tax Lien Costs Revenue	R	-$12,500.00	-$12,241.31	-$258.69	97.9
001	24101	40112	001-4001-24101-998-971-40112-	Quit Claim Fee Revenue	R	-$1,500.00	$0.00	-$1,500.00	0.0
001	24101	40115	001-4001-24101-998-971-40115-	Payments in Lieu of Taxes Rev	R	-$195,000.00	-$50,000.00	-$145,000.00	25.6
001	24101	40406	001-4001-24101-998-971-40406-	State Vets Tax Reimburse Rev	R	-$19,300.00	-$15,262.00	-$4,038.00	79.1
001	24101	40408	001-4001-24101-998-971-40408-	State Tree Growth Assess Rev	R	-$25,000.00	-$38,311.50	$13,311.50	153.2
	24101			**Total 24101 Property Taxes**		-$66,477,111.01	-$66,756,153.18	$66,402,853.18	99.8
001	24102	40120	001-4002-24101-998-972-40120-	Motor Vehicle Excise Tax Rev	R	-$4,100,000.00	-$1,863,959.87	-$2,236,040.13	45.5
001	24102	40121	001-4002-24101-998-972-40121-	Boat Excise Tax Revenue	R	-$17,500.00	-$3,331.00	-$14,169.00	19.0
	24102			**Total 24102 Excise Taxes**		-$4,117,500.00	-$1,867,290.87	-$2,250,209.13	45.4
001	24110	40122	001-4004-24102-998-973-40122-	Snowmobile Registration Reimbu	R	-$1,400.00	$0.00	-$1,400.00	0.0
001	24110	40263	001-4004-24102-998-973-40263-	Motor Vehicle Reg Fee Rev	R	-$84,000.00	-$32,874.35	-$51,125.65	39.1
001	24110	40264	001-4004-24102-998-973-40264-	IFW Registration Fee Rev	R	-$2,900.00	-$720.00	-$2,180.00	24.8
	24110			**Total 24110 Registration Fees**		-$88,300.00	-$33,594.35	-$54,705.65	38.0
001	24111	40200	001-5001-24102-998-951-40200-	Birth Certificate Fee Revenue	R	-$20,000.00	-$8,435.40	-$11,564.60	42.2
001	24111	40201	001-5001-24102-998-951-40201-	Death Certificate Fee Revenue	R	-$12,000.00	-$4,409.80	-$7,590.20	36.7
001	24111	40202	001-5001-24102-998-951-40202-	Burial Permit Revenue	R	-$6,500.00	-$1,473.00	-$5,027.00	22.7
001	24111	40204	001-5001-24102-998-951-40204-	Marriage Certificate Fee Rev	R	-$5,000.00	-$2,920.80	-$2,079.20	58.4
001	24111	40205	001-5001-24102-998-951-40205-	Marriage License Revenue	R	-$6,500.00	-$3,628.00	-$2,872.00	55.8
001	24111	40206	001-5001-24102-998-951-40206-	Resident Turkey License Rev	R	-$30.00	$0.00	-$30.00	0.0
001	24111	40207	001-5001-24102-998-951-40207-	Resident Fishing License Rev	R	-$500.00	-$36.00	-$464.00	7.2
001	24111	40208	001-5001-24102-998-951-40208-	Massage Therapy License Revenu	R	-$1,000.00	-$300.00	-$700.00	30.0
001	24111	40209	001-5001-24102-998-951-40209-	Muzzle Loading License Rev	R	-$15.00	-$1.00	-$14.00	6.7
001	24111	40210	001-5001-24102-998-951-40210-	Duplicate License-Combo Rev	R	-$10.00	-$2.00	-$8.00	20.0
001	24111	40212	001-5001-24102-998-951-40212-	Coyote License Revenue	R	-$10.00	-$2.00	-$8.00	20.0
001	24111	40213	001-5001-24102-998-951-40213-	Pheasant Stamp Fee Rev	R	-$10.00	$0.00	-$10.00	0.0
001	24111	40214	001-5001-24102-998-951-40214-	Duck Stamp Fee Revenue	R	-$5.00	$0.00	-$5.00	0.0
001	24111	40215	001-5001-24102-998-951-40215-	Resident Hunting Lic Rev	R	-$100.00	-$18.00	-$82.00	18.0
001	24111	40216	001-5001-24102-998-951-40216-	Junior Hunting Lic Rev	R	-$10.00	$0.00	-$10.00	0.0

001	24111	40217	001-5001-24102-998-951-40217-	Archery License Revenue	R	-$100.00	-$15.00	-$85.00	15.0
001	24111	40218	001-5001-24102-998-951-40218-	Resident Combo Lic Rev	R	-$250.00	-$16.00	-$234.00	6.4
001	24111	40220	001-5001-24102-998-951-40220-	Small Game License Rev	R	-$5.00	$0.00	-$5.00	0.0
001	24111	40221	001-5001-24102-998-951-40221-	Bear License Revenue	R	-$10.00	-$2.00	-$8.00	20.0
001	24111	40229	001-5001-24102-998-951-40229-	Victualers License Revenue	R	-$12,000.00	-$1,875.00	-$10,125.00	15.6
001	24111	40230	001-5001-24102-998-951-40230-	Entertainment License Rev	R	-$2,200.00	-$300.00	-$1,900.00	13.6
001	24111	40232	001-5001-24102-998-951-40232-	Garage/Service Sta Lic Rev	R	-$1,500.00	-$150.00	-$1,350.00	10.0
001	24111	40233	001-5001-24102-998-951-40233-	Vendor License Revenue	R	-$300.00	-$100.00	-$200.00	33.3
001	24111	40234	001-5001-24102-998-951-40234-	Taxi License Revenue	R	-$220.00	$0.00	-$220.00	0.0
001	24111	40237	001-5001-24102-998-951-40237-	Second Hand Dealer Lic Rev	R	-$610.00	$0.00	-$610.00	0.0
001	24111	40239	001-5001-24102-998-951-40239-	Research Revenue	R	-$50.00	$0.00	-$50.00	0.0
001	24111	40258	001-5001-24102-998-951-40258-	Advertising Costs Revenue	R	-$800.00	-$200.00	-$600.00	25.0
001	24111	40259	001-5001-24102-998-951-40259-	City Clerk Services Rev	R	-$1,000.00	-$348.00	-$652.00	34.8
001	24111	40260	001-5001-24102-998-951-40260-	Copies Revenue	R	-$100.00	-$16.50	-$83.50	16.5
001	24111	40262	001-5001-24102-998-951-40262-	Returned Check Fee Rev	R	-$700.00	-$425.00	-$275.00	60.7
001	24111	40265	001-5001-24102-998-951-40265-	Building Permit Revenue	R	-$800,000.00	-$466,952.58	-$333,047.42	58.4
001	24111	40266	001-5001-24102-998-951-40266-	Electrical Permit Revenue	R	-$80,000.00	-$38,034.06	-$41,965.94	47.5
001	24111	40267	001-5001-24102-998-951-40267-	Plumbing Permit Revenue	R	-$40,000.00	-$9,769.00	-$30,231.00	24.4
001	24111	40268	001-5001-24102-998-951-40268-	Junk Yard Permit Revenue	R	-$200.00	$0.00	-$200.00	0.0
001	24111	40271	001-5001-24102-998-951-40271-	Code Violations Fine Revenue	R	-$500.00	$0.00	-$500.00	0.0
001	24111	40272	001-5001-24102-998-951-40272-	Code Prof Review Fee Rev	R	-$500.00	-$100.00	-$400.00	20.0
001	24111	40273	001-5001-24102-998-951-40273-	ZBA Fee Revenue	R	-$3,000.00	-$1,956.80	-$1,043.20	65.2
001	24111	40275	001-5001-24102-998-951-40275-	Plan Bd Admin Fee Rev	R	-$4,520.00	-$5,775.00	$1,255.00	127.8
001	24111	40277	001-5001-24102-998-951-40277-	Plan Bd Minor Subdivision Rev	R	-$25,000.00	$0.00	-$25,000.00	0.0
001	24111	40278	001-5001-24102-998-951-40278-	Plan Bd Major Subdivision Rev	R	-$20,000.00	-$7,406.00	-$12,594.00	37.0
001	24111	40279	001-5001-24102-998-951-40279-	Plan Bd Site Review Rev	R	-$2,000.00	-$600.00	-$1,400.00	30.0
001	24111	40285	001-5001-24102-998-951-40285-	Plan Bd Cond Use/Oth1 Rev	R	-$2,750.00	$0.00	-$2,750.00	0.0
001	24111	40288	001-5001-24102-998-951-40288-	Plan Bd Cont/Cond Zone1 Rev	R	-$10,000.00	-$3,840.00	-$6,160.00	38.4
001	24111	40294	001-5001-24102-998-951-40294-	Plan Bd Shoreland Zone Rev	R	-$160.00	-$30.00	-$130.00	18.8
001	24111	40310	001-5001-24102-998-951-40310-	Sole Priopriotor Filing Fee Rv	R	-$27,500.00	-$14,400.00	-$13,100.00	52.4
001	24111	40317	001-5001-24102-998-951-40317-	Code Permit Application Fee Rv	R	-$3,000.00	-$500.00	-$2,500.00	16.7
001	24111	40318	001-5001-24102-998-951-40318-	Historic Preservation App Fee	R	-$153,450.00	-$1,000.00	-$152,450.00	0.7
001	24111	40319	001-5001-24102-998-951-40319-	Special Event Permit Fees	R	-$800.00	-$400.00	-$400.00	50.0
001	24111	40320	001-5001-24102-998-951-40320-	Accessory Dwelling Fee	R	-$100,000.00	$125.00	-$100,125.00	-0.1
001	24111	40321	001-5001-24102-998-951-40321-	Inspection Program Revenue	R	-$50,000.00	$0.00	-$50,000.00	0.0
001	24111	40324	001-5001-24102-998-951-40324-	Cannabis Business License	R	$0.00	-$40.00	$40.00	100.0
001	24111	40556	001-5001-24102-998-951-40556-	Copies Sold Revenue	R	-$100.00	$0.00	-$100.00	0.0
	24111			**Total 24111 Gen Govt Licenses, Perm**		-$1,395,015.00	-$575,351.94	-$819,663.06	41.2
001	24112	40600	001-5002-24102-998-952-40600-	Rental AT&T Cell ME Site Rev	R	-$33,891.00	-$13,996.05	-$19,894.95	41.3
001	24112	40601	001-5002-24102-998-952-40601-	Rental Verizon Cell ME Site Rv	R	-$18,742.75	-$8,745.05	-$9,997.70	46.7
001	24112	40602	001-5002-24102-998-952-40602-	Rental City Theater Revenue	R	-$960.00	-$960.00	$0.00	100.0
001	24112	40605	001-5002-24102-998-952-40605-	Rental US Cellular ME Site Rev	R	-$43,442.10	-$18,311.73	-$25,130.37	42.2
001	24112	40638	001-5002-24102-998-952-40638-	Rental T-Mobile Cell ME Site R	R	-$32,864.00	$0.00	-$32,864.00	0.0
	24112			**Total 24112 Pub Srvcs Licenses, Per**		-$129,899.85	-$42,012.83	-$87,887.02	32.3
001	24113	40297	001-5003-24102-998-953-40297-	False Alarm Fee Revenue	R	-$30,000.00	-$6,465.00	-$23,535.00	21.6
001	24113	40298	001-5003-24102-998-953-40298-	Ordinance Fines Revenue	R	-$1,000.00	$0.00	-$1,000.00	0.0
001	24113	40299	001-5003-24102-998-953-40299-	Animal Cntrl Collections Rev	R	-$2,500.00	-$100.00	-$2,400.00	4.0
001	24113	40300	001-5003-24102-998-953-40300-	Police Reports Revenue	R	-$5,000.00	-$1,854.50	-$3,145.50	37.1
001	24113	40307	001-5003-24102-998-953-40307-	Court Ordered Restitution Rev	R	$0.00	-$475.00	$475.00	100.0
001	24113	40309	001-5003-24102-998-953-40309-	Blasting Permit Fee Revenue	R	-$685.09	-$50.00	-$635.09	7.3
001	24113	40316	001-5003-24102-998-953-40316-	Parking Fines Revenue	R	-$25,000.00	-$25,851.00	$851.00	103.4
001	24113	40460	001-5003-24102-998-953-40460-	PSAP Service Fees	R	-$378,232.00	-$378,233.75	$1.75	100.0
001	24113	40463	001-5003-24102-998-953-40463-	Police Grants	R	-$20,000.00	-$5,795.83	-$14,204.17	29.0
001	24113	40630	001-5003-24102-998-953-40630-	Rental Verizon Cell Site	R	-$20,988.00	-$9,782.65	-$11,205.35	46.6
	24113			**Total 24113 Pub Safety Licenses, Pe**		-$483,405.09	-$428,607.73	-$54,797.36	88.7
001	24114	40223	001-5004-24102-998-954-40223-	Cemetery Fee Revenue	R	-$10,000.00	-$2,050.00	-$7,950.00	20.5
001	24114	40231	001-5004-24102-998-954-40231-	Septic Sludge Permit Rev	R	-$100.00	$0.00	-$100.00	0.0
001	24114	40235	001-5004-24102-998-954-40235-	Solid Waste Annual Fee Rev	R	-$3,000.00	$0.00	-$3,000.00	0.0
001	24114	40302	001-5004-24102-998-954-40302-	Street Opening Permit Rev	R	-$22,525.00	-$10,820.00	-$11,705.00	48.0
001	24114	40303	001-5004-24102-998-954-40303-	Recycling Revenue	R	-$66,000.00	-$54,328.59	-$11,671.41	82.3
001	24114	40304	001-5004-24102-998-954-40304-	Solid Waste Bag Sales Revenue	R	-$100,000.00	-$25,360.55	-$74,639.45	25.4
001	24114	40322	001-5004-24102-998-954-40322-	Large Bin Sales Revenue	R	-$27,500.00	-$7,686.00	-$19,814.00	27.9
001	24114	40700	001-5004-24102-998-954-40700-	Municipal Garage Labor Charge	R	-$120,000.00	-$35,540.00	-$84,460.00	29.6
	24114			**Total 24114 Pub Works Licenses, Per**		-$349,125.00	-$135,785.14	-$213,339.86	38.9
001	24120	40400	001-4006-24103-998-974-40400-	State Revenue Sharing Rev	R	-$4,254,393.34	-$1,817,072.55	-$2,437,320.79	42.7
	24120			**Total 24120 State Revenue Sharing**		-$4,254,393.34	-$1,817,072.55	-$2,437,320.79	42.7
001	24121	40401	001-4007-24103-998-975-40401-	State Homestead Exemption Rev	R	-$799,402.07	-$640,428.00	-$158,974.07	80.1
	24121			**Total 24121 State Homestead Exempti**		-$799,402.07	-$640,428.00	-$158,974.07	80.1
001	24122	40433	001-5001-24103-998-951-40433-	Fed Fish & Wildlife Rev Share	R	-$7,000.00	$0.00	-$7,000.00	0.0
	24122			**Total 24122 Gen Govt Intergovernmen**		-$7,000.00	$0.00	-$7,000.00	0.0
001	24123	40402	001-5002-24103-998-952-40402-	State G A Reimbursement Rev	R	-$622,393.10	-$99,791.70	-$522,601.40	16.0
	24123			**Total 24123 Pub Srvcs Intergovernme**		-$622,393.10	-$99,791.70	-$522,601.40	16.0
001	24124	40410	001-5003-24103-998-953-40410-	State Witness Fees Rev	R	-$2,500.00	-$172.02	-$2,327.98	6.9
	24124			**Total 24124 Pub Safety Intergovernm**		-$2,500.00	-$172.02	-$2,327.98	6.9
001	24125	40404	001-5004-24103-998-954-40404-	State Road Assist Program Rev	R	-$200,000.00	$0.00	-$200,000.00	0.0
001	24125	40450	001-5004-24103-998-954-40450-	School Bus Electric Reimb.	R	-$25,000.00	$0.00	-$25,000.00	0.0
	24125			**Total 24125 Pub Works Intergovernme**		-$225,000.00	$0.00	-$225,000.00	0.0
001	24128	40405	001-4012-24103-998-976-40405-	State BETE Reimbursement Reven	R	-$348,792.42	$0.00	-$348,792.42	0.0
	24128			**Total 24128 State BETE Program Reim**		-$348,792.42	$0.00	-$348,792.42	0.0
001	24140	40500	001-4009-24104-998-978-40500-	Investment Income Revenue	R	-$875,000.00	-$388.79	-$874,611.21	0.0
001	24140	40501	001-4009-24104-998-978-40501-	Interest on Notes Rec Rev	R	-$16,500.00	$0.00	-$16,500.00	0.0
	24140			**Total 24140 Investment Income**		-$891,500.00	-$388.79	-$891,111.21	0.0
001	24150	40127	001-5001-24105-998-951-40127-	Sale of City-Owned Prop Rev	R	$0.00	-$560,000.00	$560,000.00	100.0
001	24150	40559	001-5001-24105-998-951-40559-	Miscellaneous Revenue	R	$0.00	-$129,342.56	$129,342.56	100.0
	24150			**Total 24150 Gen Govt Other**		$0.00	-$689,342.56	$689,342.56	100.0

001	24151	40562	001-5002-24105-998-952-40562-	Arena Debt Serv Reimburse Rev	R	-$62,118.24	$0.00	-$62,118.24	0.0
	24151			**Total 24151 Pub Srvcs Other**		-$62,118.24	$0.00	-$62,118.24	0.0
001	24152	40559	001-5003-24105-998-953-40559-	Miscellaneous Revenue	R	-$26,380.00	$0.00	-$26,380.00	0.0
	24152			**Total 24152 Pub Safety Other**		-$26,380.00	$0.00	-$26,380.00	0.0
001	24153	40559	001-5004-24105-998-954-40559-	Miscellaneous Revenue	R	-$2,300.00	-$29,768.76	$27,468.76	1,294.3
	24153			**Total 24153 Pub Works Other**		-$2,300.00	-$29,768.76	$27,468.76	1,294.3
001	24199	40801	001-4099-24199-998-959-40801-	Transfer in from Other Funds	R	-$2,412,817.95	$0.00	-$2,412,817.95	0.0
	24199			**Total 24199 Transfers In**		-$2,412,817.95	$0.00	-$2,412,817.95	0.0
001	44444	33333	001-0000-11001-827-957-33333-	NON-REIMBURSABLE EXP	E	$0.00	$0.00	$0.00	0.0
	44444			**Total 44444 Encampment 2024**		$0.00	$0.00	$0.00	0.0
SEWER OPERATIONS									
601	35101	40250	601-6001-35101-994-997-40250-	Inflow & Infiltration Fee Rev	R	0	5,403.19	-5,403	100.0
				Total 40250 Inflow & Infiltration F		0	5,403.19	-5,403	100.0
601	35102	40245	601-6001-35102-994-997-40245-	Septic Sludge Disposal Fee Rev	R	0	-15.00	15	100.0
601	35102	40246	601-6001-35102-994-997-40246-	Sewer Inspection Fee Revenue	R	0	-15.00	15	100.0
601	35102	40249	601-6001-35102-994-997-40249-	Sewer User Fee Revenue	R	0	-348,379.01	348,379	100.0
601	35102	40253	601-6001-35102-994-997-40253-	Sewer Current Interest Rev	R	0	-17,358.97	17,359	100.0
601	35102	40256	601-6001-35102-994-997-40256-	Sewer Submeter Sales Rev	R	0	-199.46	199	100.0
601	35102	40503	601-6001-35102-994-997-40503-	New Sewer Permit	R	0	-79,990.00	79,990	100.0
601	35102	60102	601-6001-35102-994-997-60102-	Mid Mgmt Hrly Employee Wage Ex	E	88,530	22,329.43	66,200	25.2
601	35102	60105	601-6001-35102-994-997-60105-	F-T Employee Wage Exp	E	60,755	9,705.64	51,049	16.0
601	35102	60106	601-6001-35102-994-997-60106-	P-T Employee Wage Exp	E	79,316	13,095.25	66,220	16.5
601	35102	60201	601-6001-35102-994-997-60201-	FICA/Medicare-ER Share Exp	E	17,680	3,344.26	14,336	18.9
601	35102	60202	601-6001-35102-994-997-60202-	MPERS Employer Share Exp	E	21,181	355.04	20,826	1.7
601	35102	60203	601-6001-35102-994-997-60203-	457 Plan-Employer Share Exp	E	1,057	485.27	572	45.9
601	35102	60210	601-6001-35102-994-997-60210-	HPHC Ins Employer Share Exp	E	57,621	6,023.17	51,598	10.5
601	35102	60212	601-6001-35102-994-997-60212-	S-T Disability ER Share Exp	E	0	25.31	-25	100.0
601	35102	60217	601-6001-35102-994-997-60217-	RHSA Plan ER Share	E	2,980	105.00	2,875	3.5
601	35102	60251	601-6001-35102-994-997-60251-	Conferences/Training Expense	E	300	0.00	300	0.0
601	35102	60252	601-6001-35102-994-997-60252-	Travel/Mileage Expense	E	350	0.00	350	0.0
601	35102	60257	601-6001-35102-994-997-60257-	Professional License Fees Exp	E	250	0.00	250	0.0
601	35102	60302	601-6001-35102-994-997-60302-	Audit Services Expense	E	10,000	3,900.00	6,100	39.0
601	35102	60304	601-6001-35102-994-997-60304-	Registry of Deeds Fee Expense	E	8,000	0.00	8,000	0.0
601	35102	60306	601-6001-35102-994-997-60306-	Other Prof/Consult Srvs Exp	E	10,000	0.00	10,000	0.0
601	35102	60310	601-6001-35102-994-997-60310-	Service Contracts Expense	E	128,923	9,664.54	119,258	7.5
601	35102	60325	601-6001-35102-994-997-60325-	Postage/Shipping Expense	E	8,300	0.00	8,300	0.0
601	35102	60331	601-6001-35102-994-997-60331-	Land/Building Lease Expense	E	1,240	0.00	1,240	0.0
601	35102	60370	601-6001-35102-994-997-60370-	Workers Comp Insuranct Exp	E	32,674	0.00	32,674	0.0
601	35102	60372	601-6001-35102-994-997-60372-	Vehicle Insurance Expense	E	8,852	8,852.00	0	100.0
601	35102	60373	601-6001-35102-994-997-60373-	Building/Boiler Insurance Exp	E	19,284	0.00	19,284	0.0
601	35102	60382	601-6001-35102-994-997-60382-	Pollution Insurance Expense	E	15,073	13,849.04	1,224	91.9
601	35102	60402	601-6001-35102-994-997-60402-	Phone/Celular/Paging Exp	E	2,191	0.00	2,191	0.0
601	35102	60404	601-6001-35102-994-997-60404-	Sewer User Fee Expense	E	5,000	88.44	4,912	1.8
601	35102	60500	601-6001-35102-994-997-60500-	Admin/Office Supp/Eqt Non-Cap	E	700	0.00	700	0.0
601	35102	60501	601-6001-35102-994-997-60501-	Operating Supp/Eqt Non-Cap	E	30,000	35,064.38	-5,064	116.9
601	35102	60602	601-6001-35102-994-997-60602-	Equipment Purchase Cap	E	100,000	0.00	100,000	0.0
601	35102	60603	601-6001-35102-994-997-60603-	Vehicles Purchase Capital	E	24,873	0.00	24,873	0.0
601	35102	60605	601-6001-35102-994-997-60605-	Sewer Construc/ImproveCap	E	386,500	0.00	386,500	0.0
601	35102	60700	601-6001-35102-994-997-60700-	Depreciation Expense	E	1,137,760	0.00	1,137,760	0.0
601	35102	60750	601-6001-35102-994-997-60750-	Bond Principal Expense	E	320,000	314,000.00	6,000	98.1
601	35102	60751	601-6001-35102-994-997-60751-	Bond Interest Expense	E	65,200	33,547.25	31,653	51.5
601	35102	60797	601-6001-35102-994-997-60797-	Miscellaneous Expense	E	12,800	11,779.63	1,020	92.0
601	35102	60798	601-6001-35102-994-997-60798-	Contingency	E	25,000	0.00	25,000	0.0
601	35102	60799	601-6001-35102-994-997-60799-	Transfer Out to Other Funds	E	130,474	0.00	130,474	0.0
	35102			**Total 35102 Sewer Operations**		2,812,863	40,256.21	2,772,607	1.4
601	35103	60102	601-6001-35103-994-997-60102-	Mid Mgmt Hrly Employee Wage Ex	E	1,405	690.61	714	49.2
601	35103	60201	601-6001-35103-994-997-60201-	FICA/Medicare-ER Share Exp	E	111	50.73	60	45.7
601	35103	60202	601-6001-35103-994-997-60202-	MPERS Employer Share Exp	E	148	10.98	137	7.4
601	35103	60210	601-6001-35103-994-997-60210-	HPHC Ins Employer Share Exp	E	9	84.12	-75	973.6
601	35103	60212	601-6001-35103-994-997-60212-	S-T Disability ER Share Exp	E	0	0.12	0	100.0
601	35103	60252	601-6001-35103-994-997-60252-	Travel/Mileage Expense	E	350	0.00	350	0.0
601	35103	60301	601-6001-35103-994-997-60301-	Legal Services Expense	E	500	0.00	500	0.0
601	35103	60370	601-6001-35103-994-997-60370-	Workers Comp Insurance Exp	E	27	0.00	27	0.0
601	35103	60406	601-6001-35103-994-997-60406-	Fiber/Internet Expense	E	635	0.00	635	0.0
601	35103	60500	601-6001-35103-994-997-60500-	Admin/Office Supp/Eqt Non-Cap	E	265	0.00	265	0.0
601	35103	60501	601-6001-35103-994-997-60501-	Operating Supp/Eqt Non-Cap	E	120	0.00	120	0.0
601	35103	60797	601-6001-35103-994-997-60797-	Miscellaneous Expense	E	27,552	9,421.13	18,130	34.2
601	35103	60799	601-6001-35103-994-997-60799-	Transfer Out to Other Funds	E	13,829	0.00	13,829	0.0
	35103			**Total 35103 Sewer Ind Pretreat Prog**		44,950	10,257.69	34,692	22.8
601	35104	60102	601-6001-35104-994-997-60102-	Mid Mgmt Hrly Employee Wage Ex	E	82,475	43,827.74	38,647	53.1
601	35104	60105	601-6001-35104-994-997-60105-	F-T Employee Wage Exp	E	313,910	115,239.09	198,671	36.7
601	35104	60111	601-6001-35104-994-997-60111-	Overtime Wage Expense	E	31,500	20,953.70	10,546	66.5
601	35104	60129	601-6001-35104-994-997-60129-	Insurance Buyout Pay	E	3,074	0.00	3,074	0.0
601	35104	60201	601-6001-35104-994-997-60201-	FICA/Medicare-ER Share Exp	E	28,841	13,237.23	15,603	45.9
601	35104	60202	601-6001-35104-994-997-60202-	MPERS Employer Share Exp	E	22,827	13,849.40	8,977	60.7
601	35104	60203	601-6001-35104-994-997-60203-	457 Plan-Employer Share Exp	E	7,423	2,778.58	4,644	37.4
601	35104	60210	601-6001-35104-994-997-60210-	HPHC Ins Employer Share Exp	E	289	0.00	289	0.0
601	35104	60211	601-6001-35104-994-997-60211-	NNEBT Ins Employer Share Exp	E	114,752	48,895.53	65,856	42.6
601	35104	60217	601-6001-35104-994-997-60217-	RHSA Plan ER Share	E	4,680	1,200.00	3,480	25.6
601	35104	60230	601-6001-35104-994-997-60230-	Clothing Allowance Expense	E	5,500	2,495.48	3,005	45.4
601	35104	60251	601-6001-35104-994-997-60251-	Conferences/Training Expense	E	1,350	380.00	970	28.1
601	35104	60252	601-6001-35104-994-997-60252-	Travel/Mileage Expense	E	1,050	0.00	1,050	0.0
601	35104	60253	601-6001-35104-994-997-60253-	Food/Lodging Expense	E	50	378.44	-328	756.9
601	35104	60312	601-6001-35104-994-997-60312-	Temporary Agency Help Exp	E	25,000	0.00	25,000	0.0
601	35104	60313	601-6001-35104-994-997-60313-	Construction Services Expense	E	233,000	1,294.56	231,705	0.6
601	35104	60330	601-6001-35104-994-997-60330-	Equipment Rent/Lease Exp	E	600	0.00	600	0.0
601	35104	60342	601-6001-35104-994-997-60342-	Grit Disposal Expense	E	12,000	0.00	12,000	0.0
601	35104	60400	601-6001-35104-994-997-60400-	Electricity Expense	E	60,000	19,886.54	40,113	33.1
601	35104	60402	601-6001-35104-994-997-60402-	Phone/Celular/Paging Exp	E	5,750	1,103.29	4,647	19.2

601	35104	60410	601-6001-35104-994-997-60410-	Diesel Fuel Expense	E	15,500	3,958.94	11,541	25.5
601	35104	60411	601-6001-35104-994-997-60411-	Gasoline Expense	E	8,100	1,243.87	6,856	15.4
601	35104	60450	601-6001-35104-994-997-60450-	Building Repair/Maint Exp	E	97,000	14,230.06	82,770	14.7
601	35104	60452	601-6001-35104-994-997-60452-	Operating Equip Repair Exp	E	20,300	40.40	20,260	0.2
601	35104	60453	601-6001-35104-994-997-60453-	Vehicle Repair/Tires/Oil Exp	E	20,000	25,177.81	-5,178	125.9
601	35104	60457	601-6001-35104-994-997-60457-	Road Maint/Improve Non-Cap	E	20,000	19,822.94	177	99.1
601	35104	60500	601-6001-35104-994-997-60500-	Admin/Office Supp/Eqt Non-Cap	E	4,300	0.00	4,300	0.0
601	35104	60501	601-6001-35104-994-997-60501-	Operating Supp/Eqt Non-Cap	E	3,100	21.97	3,078	0.7
601	35104	60505	601-6001-35104-994-997-60505-	Construction Supplies	E	46,000	15,953.60	30,046	34.7
601	35104	60506	601-6001-35104-994-997-60506-	Equipment/Small Tools-Non-cap	E	13,000	2,464.51	10,535	19.0
	35104			**Total 35104 P.W. Wastewater Mainten**		1,201,370	368,433.68	832,937	30.7
601	35105	60101	601-6001-35105-994-997-60101-	Dept Manager Salary Exp	E	57,542	22,870.55	34,671	39.7
601	35105	60102	601-6001-35105-994-997-60102-	Mid Mgmt Hrly Employee Wage Ex	E	112,940	0.00	112,940	0.0
601	35105	60105	601-6001-35105-994-997-60105-	F-T Employee Wage Exp	E	442,902	191,122.84	251,780	43.2
601	35105	60107	601-6001-35105-994-997-60107-	Temp Employee Wage Exp	E	9,600	7,690.00	1,910	80.1
601	35105	60111	601-6001-35105-994-997-60111-	Overtime Wage Expense	E	57,091	24,248.54	32,842	42.5
601	35105	60201	601-6001-35105-994-997-60201-	FICA/Medicare-ER Share Exp	E	52,253	17,788.26	34,465	34.0
601	35105	60202	601-6001-35105-994-997-60202-	MPERS Employer Share Exp	E	68,692	24,300.53	44,392	35.4
601	35105	60210	601-6001-35105-994-997-60210-	HPHC Ins Employer Share Exp	E	0	48.92	-49	100.0
601	35105	60211	601-6001-35105-994-997-60211-	NNEBT Ins Employer Share Exp	E	162,486	56,272.75	106,214	34.6
601	35105	60212	601-6001-35105-994-997-60212-	S-T Disability ER Share Exp	E	0	16.24	-16	100.0
601	35105	60217	601-6001-35105-994-997-60217-	RHSA Plan ER Share	E	6,256	1,788.25	4,468	28.6
601	35105	60230	601-6001-35105-994-997-60230-	Clothing Allowance Expense	E	5,900	1,699.88	4,200	28.8
601	35105	60251	601-6001-35105-994-997-60251-	Conferences/Training Expense	E	5,700	0.00	5,700	0.0
601	35105	60252	601-6001-35105-994-997-60252-	Travel/Mileage Expense	E	1,900	1,366.45	534	71.9
601	35105	60253	601-6001-35105-994-997-60253-	Food/Lodging Expense	E	1,500	87.67	1,412	5.8
601	35105	60256	601-6001-35105-994-997-60256-	Dues/Memberships Expense	E	500	0.00	500	0.0
601	35105	60257	601-6001-35105-994-997-60257-	Professional License Fees Exp	E	500	0.00	500	0.0
601	35105	60301	601-6001-35105-994-997-60301-	Legal Services Expense	E	750	0.00	750	0.0
601	35105	60306	601-6001-35105-994-997-60306-	Other Prof/Consult Srvs Exp	E	8,000	0.00	8,000	0.0
601	35105	60310	601-6001-35105-994-997-60310-	Service Contracts Expense	E	5,500	420.00	5,080	7.6
601	35105	60313	601-6001-35105-994-997-60313-	Construction Services Expense	E	5,000	3,898.93	1,101	78.0
601	35105	60325	601-6001-35105-994-997-60325-	Postage/Shipping Expense	E	250	0.00	250	0.0
601	35105	60330	601-6001-35105-994-997-60330-	Equipment Rent/Lease Exp	E	600	0.00	600	0.0
601	35105	60342	601-6001-35105-994-997-60342-	Grit Disposal Expense	E	302,000	50,032.15	251,968	16.6
601	35105	60370	601-6001-35105-994-997-60370-	Workers Comp Insurance Exp	E	15,860	0.00	15,860	0.0
601	35105	60400	601-6001-35105-994-997-60400-	Electricity Expense	E	231,500	67,738.46	163,762	29.3
601	35105	60401	601-6001-35105-994-997-60401-	Water Expense	E	6,700	1,531.54	5,168	22.9
601	35105	60402	601-6001-35105-994-997-60402-	Phone/Celular/Paging Exp	E	4,900	1,238.26	3,662	25.3
601	35105	60405	601-6001-35105-994-997-60405-	Heating Fuel Expense	E	21,000	2,865.82	18,134	13.6
601	35105	60406	601-6001-35105-994-997-60406-	Fiber/Internet Expense	E	4,900	367.12	4,533	7.5
601	35105	60410	601-6001-35105-994-997-60410-	Diesel Fuel Expense	E	22,000	84.96	21,915	0.4
601	35105	60411	601-6001-35105-994-997-60411-	Gasoline Expense	E	2,800	563.51	2,236	20.1
601	35105	60450	601-6001-35105-994-997-60450-	Building Repair/Maint Exp	E	15,400	5,860.97	9,539	38.1
601	35105	60452	601-6001-35105-994-997-60452-	Operating Equip Repair Exp	E	119,000	47,323.17	71,677	39.8
601	35105	60453	601-6001-35105-994-997-60453-	Vehicle Repair/Tires/Oil Exp	E	32,600	2,169.77	30,430	6.7
601	35105	60456	601-6001-35105-994-997-60456-	Plant Operations/Maint. Exp	E	13,000	5,811.38	7,189	44.7
601	35105	60500	601-6001-35105-994-997-60500-	Admin/Office Supp/Eqt Non-Cap	E	17,100	2,955.04	14,145	17.3
601	35105	60501	601-6001-35105-994-997-60501-	Operating Supp/Eqt Non-Cap	E	14,600	2,941.52	11,658	20.1
601	35105	60506	601-6001-35105-994-997-60506-	Equipment/Small Tools-Non-cap	E	8,000	10,523.33	-2,523	131.5
601	35105	60509	601-6001-35105-994-997-60509-	Cleaning Supplies Expense	E	0	728.95	-729	100.0
601	35105	60510	601-6001-35105-994-997-60510-	Process Chemicals Expense	E	153,000	38,655.55	114,344	25.3
601	35105	60511	601-6001-35105-994-997-60511-	Laboratory Supplies	E	26,100	10,648.23	15,452	40.8
	35105			**Total 35105 New Sewer Operations Ex**		2,016,323	605,659.54	1,410,663	30.0

Gerry Matherne, Finance Director

gerry.matherne@biddefordmaine.org

205 Main Street / PO Box 586 • Biddeford, ME

City of Biddeford Government

(207) 571-0700 • www.biddefordmaine.org

@CityofBiddeford

Accounts Over or Under YTD as of 11/13/25 (36% of FY26)

Mayor/Council – Currently no funds spent on conferences, training or dues.
21101-60121
21101-60251
21101-60256
21101-60500

City Manager – Due to change in City Manager
21102-60101

City Clerk – Approved overtime expenses for full time staff
21103-60111

Elections/Voter Registration – Election costs. Minimal expenses are expected out of this budget for the rest of the FY
21104-60107

Assessing – Corrections needed by HR to move Mid Mgmt out of Dept Manager Salary
21105-60101
21105-60105

Finance – Approved overtime expenses for full time staff
21106-60111

Computer Services – Travel for conference
21107-60251

Personnel – Corrections needed by HR to move Mid Mgmt out of Dept Manager Salary.
21108-60101

Community Center – Minuteman cameras and security
21123-60450
21123-60501

Recreation – Cupola repair & cleaning supplies
21123-60450
21123-60509

Communications – Franchise fee towards end of year
21131-40130

Fire Dept – Finance Director to reclass EMS Grant charges
21141-60252
21141-60253

Intergovernmental transfers booked in December
24125-40404
24125-40450
24199-40801

Fund 601 – Currently below budget