City of Biddeford
Zoning Board of Appeals

November 13, 2025 at 6:00 PM
City Hall Council Chambers & Zoom

Join Zoom Meeting Online
Or call in by phone: +1 312 626 6799
Meeting ID: 957 2475 0992
Passcode: 899777

1 Chair Calls the Meeting to Order

2 Pledge of Allegiance

3 Executive Session

4 New Business: 2025.001 John Schafer, et. al., 24 Sky Harbor Dr., Biddeford, ME 04005. This matter is an administrative appeal of the Planning Board's decision of August 6, 2025 (case #2024-34) to approve a proposed pier at the University of New England (UNE) pursuant to Article XI (Site Plan Review) and Article XIV (Shoreland Zoning Ordinance) of the City Land Development Regulations. The property at issue in this appeal is located at 11 Hills Beach Road (Tax Map 52, Lot 4) in the Institutional (IN) Zone.

4.a Preliminary Business

- Quorum Determination
- Timeliness of Appeal; Required Notices Given
- Summary of Appeal
- Jurisdiction; Type of Review to be Conducted
- Conflict of Interest or Bias
- Standing
- Application Completeness; Fees Submitted

4.b Arguments Submitted to the ZBA

4.b Appellant John Schafer, et al.

4.b Planning Board Woodman Edmands; Attorney Harry Center

4.b Permittee University of New England; Attorney Ron Schneider

4.b Saco River Corridor Commission; SRCC Executive Director Cheri Dunning

4.b Additional Planning Board Information (Emails)

4.b Planning Board Notice of Decision

4.c Planning Board Record

4.c May 21, 2025 Planning Board Meeting: Starts at 33:29

4.c June 18, 2025 Planning Board Meeting: Starts at 1:00:00

4.c July 16, 2025 Planning Board Meeting: Starts at 1:55:00

4.c August 6, 2025 Planning Board Meeting: Starts at 1:23:50

5 Other Business

6 Adjourn

received
9-4-2025

APPLICATION FOR VARIANCE OR APPEAL TO BOARD OF ZONING APPEALS

CITY OF BIDDEFORD, MAINE

NAME OF APPELLANT John Schafer, et. al.

MAILING ADDRESS 24 Sky Harbor Drive

CITY OR TOWN Biddeford

TELEPHONE 207-294-2410 MAP N/A LOT N/A ZONE N/A

NAME OF OWNER University of New England

PROPERTY LOCATION Saco River

The undersigned requests that the Board of Appeals consider one of the following:

___ **Administrative Appeal** Relief from decision, or lack of decision, of the Code Enforcement Officer or Planning Board in regard to an application for a permit. The undersigned believes that (check one).

___ an error was made in the denial of the permit.
___ the denial of the permit was based on misinterpretation of the ordinance.
___ there has been a failure to approve or deny the permit within a reasonable period of time.
___ other Approval of UNE's proposed pier was illegally granted by the Planning Board on August 6, 2025. Members knew that a certified Harbormaster never reviewed the application, as required by ordinance. Other omissions contributed to Members knowing UNE's application was incomplete.

Please explain in more detail the facts surrounding this appeal (please attach a separate piece of paper). You should be as specific as possible so that the Board of Appeals can give full consideration to your case.

___ **Variance**

a. Nature of Variance: Describe generally the nature of the variance _____

In addition, a sketch plan of the property must accompany this application showing dimensions and shape of the lot, the size and locations of existing buildings, the locations and dimensions of proposed buildings or alterations, and any natural or topographic peculiarities of the lot in question.

b. Justification of Variance: In order for a variance to be granted, the appellant must demonstrate to the Board of Appeals that the strict application of the terms of the Zoning Ordinance would cause undue hardship. The following criteria must be met before the Board of Appeals can find that a hardship exists. Please explain how our situation meets each of these criteria listed below.

1. The land in question cannot yield a reasonable return unless a variance is granted.

2. The need for a variance is due to the "unique circumstances of the property (not desired use or personal hardship) and not to the general conditions in the neighborhood.

3. The granting of a variance will not alter the essential character of the locality.

4. The hardship is not the result of action taken by the applicant or a prior owner.

5. Relief, if granted, would not cause substantial detriment to the public good, or impair the purposes and intent of this Ordinance.

Other: (Details supplied on a separate sheet of paper.)

I certify that the information contained in this application and its supplement is true and correct.

Date 09.04.25 John Schaf

Evidence Summary

Appeal of Decision by Biddeford Planning Board August 6, 2025 to approve
Application by University of New England
For a proposed marine research pier on the lower Saco River

Presented by Biddeford resident John Schafer
& additional aggrieved parties
September 4, 2025

Basis for appeal

1. The Biddeford Planning Board approved UNE's application knowing that Member Larry Patoine had requested a copy of the application that the university filed with the National Institute of Standards & Technology (NIST.) The university did not honor Mr. Patoine's request, therefore the Board knew the application was incomplete.
2. An engineer with the U.S. Army Corps of Engineers recommended that her colleagues make sure that Biddeford's Harbormaster, Paul Larivierre, was "OK" with the latest design and location of UNE's proposed pier. The Board knew that the Corps never secured approval from Biddeford's Harbormaster.
3. The Board knew that Biddeford's harbor ordinance requires that a Harbormaster approve an application for a pier.
4. The city attorney emphatically advised the Planning Board several times that a Harbormaster had approved UNE's application.
5. The city attorney continues to insist that Wayne Duffett, P.E. is the Harbormaster who approved the application.
6. Mr. Duffett is not a Harbormaster.
7. It must be assumed that each Planning Board Member thoroughly reviewed all material submitted by the public, and listened carefully to all public testimony, as required by the Board's Code of Ethics.
8. Ample evidence was provided to the Board proving that Mr. Duffett is not a Harbormaster.
9. The Board knew that Biddeford's own ordinance requires that the City's Harbormaster must be a voting resident of five years, must have five years of marine experience and at least two on the ocean, and must get training annually from the Maine Harbor Masters Association.
10. The Board knew that the Maine Harbormasters Association confirmed that Mr. Duffett is not a Harbormaster.

11. The Board was aware that Mr. Duffett was hired by the city manager to review paperwork. His duties did not include reviewing or approving the location of the proposed pier, a function normally performed by a Harbormaster.
12. The Board knew that the Maine Harbor Master Association had informed the City that the plan to hire a "Harbormaster pro tem" is "inconsistent with prevailing law."
13. The Board knew that the City ignored the advice of the Association, and proceeded with hiring Mr. Duffett anyway, as a poor substitute for hiring a certified Harbormaster.
14. The Board had ample evidence, through submitted documents and verbal public testimony submitted *directly* to the Board, that the community knows Mr. Duffett is not a Harbormaster.
15. Thus the Board knew the community does not accept as rational the city attorney's adamant claim that Mr. Duffett is a Harbormaster.
16. The Board knew that according to its own Code of Ethics, "The Planning Board has the responsibility to ensure that the decision-making process it applies to any issue…is not only rational, but is also perceived as rational."

Conclusion

Members who voted to approve UNE's application could do so in one of two ways. First, they could approve by concluding that the city attorney did not make a mistake, and therefore Mr. Duffett is indeed a Harbormaster who approved the design and location of UNE's pier, as the city attorney (an authority figure) claimed. Or, second, Members could approve by intentionally choosing to ignore all evidence that Mr. Duffett is not a Harbormaster, and by ignoring all evidence that city ordinance requires Harbormaster approval for UNE's proposed pier.

Either scenario leads to a conclusion that the Planning Board's decision was improper, and should be vacated.

Formal Requests

The Chairman of the Zoning Board of Appeals, an honorable man, recused himself from the review of UNE's application at the Saco River Corridor Commission. It seems logical that he must also recuse himself from consideration of this appeal. As well, the city attorney remains adamant that Wayne Duffett, P.E. is a Harbormaster. This appeal rests upon the fundamental contention that he is not. The firm of Woodman Edmands normally represents Biddeford's various boards and commissions, and the city

attorney has a vested interest in a conclusion that proves his legal advice was correct. Should the Zoning Board of Appeals wish to be advised by legal counsel during this appeal, it seems reasonable that it should select a firm other than Woodman Edmands to perform that function. Thank you for considering these requests.

Supporting Documentation

All the following documents were submitted to the Planning Board, and this appeal pre-supposes that each Member diligently reviewed and understood their meaning.

1. ***The Planning Board knew the U.S. Army Corps of Engineers should have followed up to get an OK from Biddeford's Harbormaster:***

From: To: Cc: Subject: Date: Stukas, Heather CIV USARMY CENAE (USA)
Maaninen, Michael A CIV USARMY CENAE (USA)
Olmstead, Peter D CIV USARMY CENAE (USA)
NAE-2024-01623-UNIVERSITY OF NEW ENGLAND-Pier and floats
Tuesday, June 25, 2024 9:24:00 AM
Good Morning Mike,

FYI – This project has been ongoing, so the PM who ultimately assign, they should do a review of
previous authorization for the project. – I believe there are older ORMs associated with the project.
Nothing has been issued to my knowledge.

Project background – this project in the past has been dislike by Biddeford Harbormaster, Paul Lariviere, due to navigation concerns, - it seems like they have been communicating with the Biddeford Harbormaster and has modified their concept to incorporate his concerns.
Whoever is assigned my recommendation to follow-up with the Biddeford Harbormaster to ensure the new concept is acceptable.

Paul Lariviere - paul@southernmainemarine.com

The Saco River does have FNP – adjacent to this location just FYI.

Heather S. Stukas
Project Manager
U.S. Army Corps of Engineers
New England District,
Maine Project Office
442 Civic Center Dr. Suite 350
Augusta, ME 04330|
Office (207)623-8367 ext. 8 or (978)318-8678
Cell (207)272-5219

2. *The Planning Board knew what the City's ordinance requires of a Harbormaster:*

☐ Sec. 74-51 **Criteria.**
[Ord. of 2-17-1998(2); Ord. No. 2007.11, 3-6-2007]

The criteria for the Harbormaster is as follows:

(1) Must be a voting resident of five years;

(2) Must have at least five years of marine experience with a minimum of two years on the ocean; and

(3) Must attend annual Maine Harbormasters Association training seminar.

3. *The Planning Board knew that contrary to what the city attorney continues to argue, Wayne Duffett, P.E. is not a Harbormaster:*

From: Maine Harbor Masters Assoc. Info <info@maineharbormasters.org>
Sent: Tuesday, June 17, 2025 1:14 PM
Subject: Inquiry

The Maine Harbor Masters Association has no record of Mr. Wayne Duffett attending Basic Harbor Master Training and Certification.

Thanks MHMA Board of Directors.

Thanks,

Maine Harbor Masters Assoc.
PO Box 1515
Scarborough, ME 04070

info@maineharbormasters.org
https://www.maineharbormasters.org/home

STATE OF MAINE
HARBOR MASTER'S
ASSOCIATION

4. The Planning Board knew the City had been advised that its plan for regulatory review of UNE's pier was incorrect:

From: Daryen Granata <dgranata@maineharbormasters.org>
Sent: Tuesday, June 4, 2024 11:34 AM
To: james.bennett@biddefordmaine.org
Subject: Harbor Master Protem question

Dear Mr. Bennett:

Thank you for reaching out to the Maine Harbormasters Association concerning the question of a 'Harbormaster Protem' for the City of Biddeford. Our Board is unaware of any precedent for such a position in the Association's jurisdiction. Review of the relevant state law, specifically Title 38, Chapter 1 of the Maine Revised Statutes, contains no provision regarding such a position. To do so would be inconsistent with the explicit state law. Harbormasters must be appointed for a term of not less than one year and are subject to all the duties and liabilities of that office as prescribed by state law, municipal ordinances and regulations adopted by the municipal officers, municipal harbor commissioners, municipal port authorities or other such bodies empowered to regulate municipal harbors.

I understand that the genesis for your inquiry centers around a pending proposal by the University of New England to construct some form of waterfront access. Section 74-35b of the Biddeford Harbor Ordinance states, "permission for the construction of any new wharf or pier within the jurisdictional limits of the City shall not be granted without approval of the Harbormaster, along with federal, state and local governing authorities." Assuming the harbormaster is unable to perform this duty for whatever reason, it usually falls to the assistant harbormaster to perform said duties. If there is no assistant or if the assistant also is unable to perform this duty, it is not uncommon for a Harbor Commission to perform this function. In fact, Section 74-62a of your harbor ordinance makes it very clear that the Biddeford Harbor Commission "...shall meet to hear appeals of decisions made by the Harbormaster and to act as an advisory vehicle for any construction from the mean high-water line down...".

The Maine Harbormasters Association discourages you from pursuing a 'protem' harbormaster as it is inconsistent with the prevailing law. Instead, we recommend that you work within the review hierarchy laid out in your harbor ordinance.

Thank you for contacting us for guidance in this matter. Please contact me if you have further questions.

Thanks,

Daryen Granata
Vice President & Training Coordinator

Maine Harbor Masters Assoc.
PO Box 1515
Scarborough, ME 04070

5. The Planning Board knew that the State of Maine requires specific training for a Harbormaster, training that Mr. Duffett does not have:

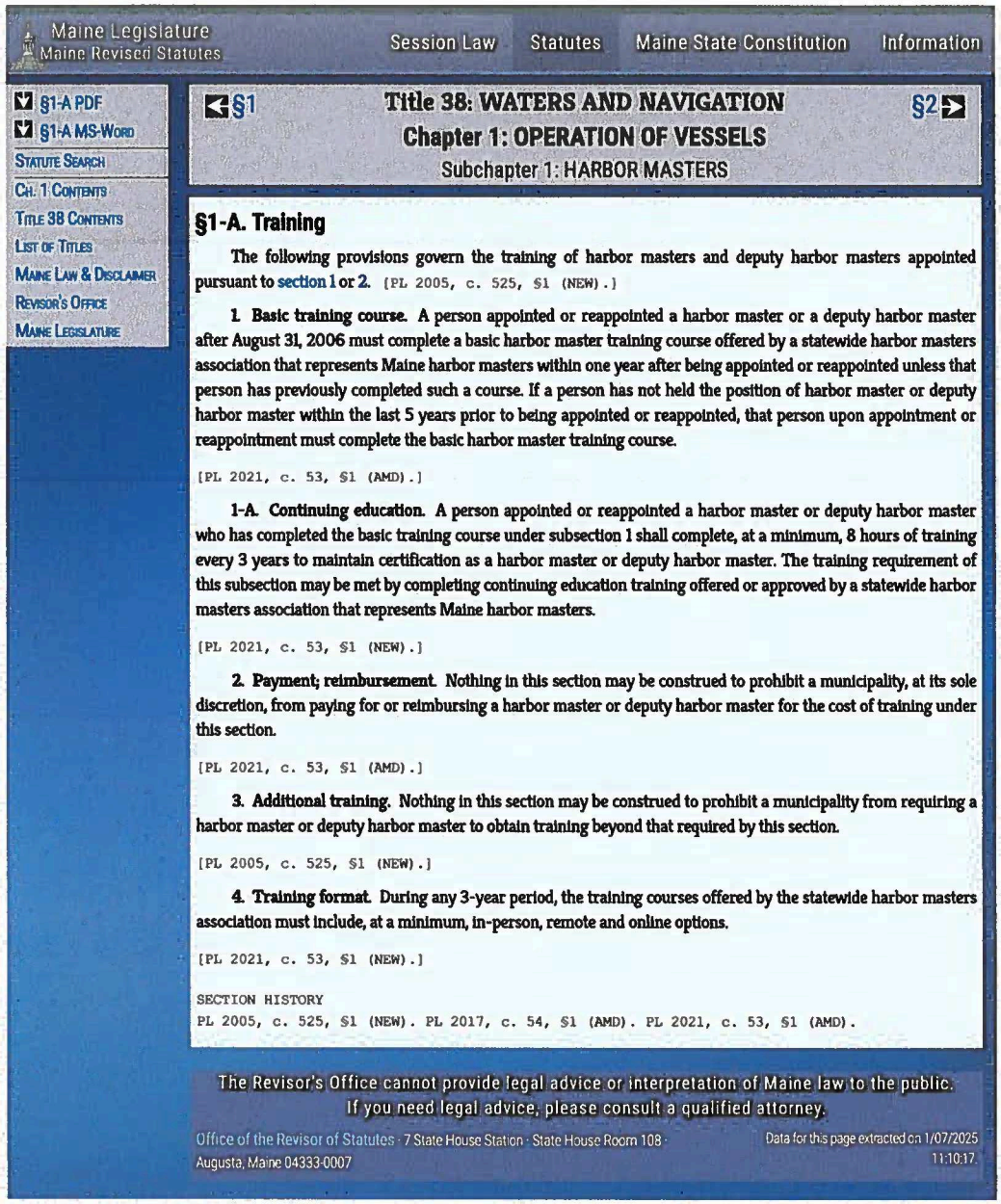

Maine Legislature
Maine Revised Statutes

Session Law | Statutes | Maine State Constitution | Information

§1-A PDF
§1-A MS-Word
Statute Search
Ch. 1 Contents
Title 38 Contents
List of Titles
Maine Law & Disclaimer
Revisor's Office
Maine Legislature

§1 | §2

Title 38: WATERS AND NAVIGATION
Chapter 1: OPERATION OF VESSELS
Subchapter 1: HARBOR MASTERS

§1-A. Training

The following provisions govern the training of harbor masters and deputy harbor masters appointed pursuant to section 1 or 2. [PL 2005, c. 525, §1 (NEW).]

1. Basic training course. A person appointed or reappointed a harbor master or a deputy harbor master after August 31, 2006 must complete a basic harbor master training course offered by a statewide harbor masters association that represents Maine harbor masters within one year after being appointed or reappointed unless that person has previously completed such a course. If a person has not held the position of harbor master or deputy harbor master within the last 5 years prior to being appointed or reappointed, that person upon appointment or reappointment must complete the basic harbor master training course.

[PL 2021, c. 53, §1 (AMD).]

1-A. Continuing education. A person appointed or reappointed a harbor master or deputy harbor master who has completed the basic training course under subsection 1 shall complete, at a minimum, 8 hours of training every 3 years to maintain certification as a harbor master or deputy harbor master. The training requirement of this subsection may be met by completing continuing education training offered or approved by a statewide harbor masters association that represents Maine harbor masters.

[PL 2021, c. 53, §1 (NEW).]

2. Payment; reimbursement. Nothing in this section may be construed to prohibit a municipality, at its sole discretion, from paying for or reimbursing a harbor master or deputy harbor master for the cost of training under this section.

[PL 2021, c. 53, §1 (AMD).]

3. Additional training. Nothing in this section may be construed to prohibit a municipality from requiring a harbor master or deputy harbor master to obtain training beyond that required by this section.

[PL 2005, c. 525, §1 (NEW).]

4. Training format. During any 3-year period, the training courses offered by the statewide harbor masters association must include, at a minimum, in-person, remote and online options.

[PL 2021, c. 53, §1 (NEW).]

SECTION HISTORY
PL 2005, c. 525, §1 (NEW). PL 2017, c. 54, §1 (AMD). PL 2021, c. 53, §1 (AMD).

The Revisor's Office cannot provide legal advice or interpretation of Maine law to the public. If you need legal advice, please consult a qualified attorney.

Office of the Revisor of Statutes · 7 State House Station · State House Room 108 · Augusta, Maine 04333-0007

Data for this page extracted on 1/07/2025 11:10:17.

Continue to last page...

6. **The Board knew that even the City acknowledges on its website that Mr. Duffett was not hired to perform the duties of a Harbormaster, that is, reviewing the design and location on the Saco River for UNE's proposed pier:**

19. **Was the firm hired to "rubber stamp" UNE's preferred site?**
The firm will not be selecting or commenting on the site of the pier. The work of the consultant is merely to determine completeness of application.

Appeal to the Biddeford Zoning Appeals

November 13, 2025

Appeal filed by John Schafer
Presented by Matthew Haas
on behalf of a coalition of Biddeford residents

This appeal rests on two assertions. First, on two key issues, the city solicitor provided incorrect legal advice and misinformation to the Planning Board, which contributed significantly to an incorrect approval of UNE's application.

Second, on other key issues the Board ignored its own Code of Ethics, a code that requires it to acquire all necessary information to have a full understanding of all issues that should have been considered. The public is well aware that the Planning Board *knew* that it was missing important information. By ignoring the fact that it did not have all the information it needed to make a rational decision, the Board violated a key provision of its own Code of Ethics: "The Planning Board has the responsibility to ensure that the decision-making process it applies to any issue before it is not only rational, but is also perceived as rational."

Both of the above assertions are true. Therefore, we urge that the Zoning Board of Appeals vacate the Planning Board's August 2025 approval of UNE's pier application.

Seven key issues

1. **Board knew city violated harbor ordinance**. The city manager incorrectly *and for no reason* removed Biddeford's assistant harbormaster from his proper regulatory role, as defined by city ordinance and the Maine Harbor Masters Association. The Planning Board knew this, but approved the application anyway.
2. **UNE stonewalled Board**. Seeking to be properly informed, board member Patoine specifically asked UNE to produce the application it filed with the National Institute of Standards and Technology. UNE dismissed his very clear request and refused to supply the documentation, yet Mr. Patoine knowingly voted in favor of UNE's application anyway.
3. **Army Corps never secured requested "sign off**." An Army Corps engineer requested application approval from Paul Lariviere, Biddeford's current harbormaster. The Planning Board was informed by residents that the "sign off" was missing from UNE's application, but approved the application anyway.
4. **Board got false information**. The city solicitor told the Planning Board that a harbormaster approved UNE's application. That was untrue, and remains untrue. And yet the Board clearly trusted that the solicitor's statements were accurate.
5. **Board ignored crucial testimony**. A Biddeford resident provided verbal and written testimony to the Planning Board detailing that in 2001, the Saco River Corridor

Commission (SRCC) had approved a condition that required a 250-foot no-development buffer along the shoreline of the Saco River --- exactly where UNE was asking the Planning Board to approve an upland access road, significant site grading, drainage, stormwater management changes and a total increase in impervious area totaling 0.249 acres. Yet the Board took no action to confirm or refute that this buffer exists.

6. **Board disregarded flaw in application**. The Board knew that it was approving an application in a location that is unavailable to UNE. Mooring owners have made it clear they are not moving, and city officials have indicated support for their right to continue mooring ownership in their current location. Knowing this, the Board also knew that their decision to approve would not be perceived as rational.
7. **Legal advice to Board fundamentally unsound**. The city solicitor's interpretation of two key provisions in the harbor ordinance are mistaken. The conclusion of his legal analysis is that the harbormaster plays absolutely no role in approving applications for new piers within the city. He adamantly asserts that the harbormaster is a mere caretaker of bureaucratic paperwork. That is incorrect, but his rousing defense of his own analysis thereby misled and misinformed Board members.

Details

1. City violated ordinance

In May of 2024 the city manager removed the harbormaster from his normal duties of reviewing UNE's pier application. The manager cited specific cause for the removal, although the cause remains in dispute among the parties. This appeal makes no commentary about that dispute.

However, Biddeford also has an assistant harbormaster, who performs the harbormaster's duties when the harbormaster is not available. Randy Desmaris is Biddeford's assistant harbormaster. He meets all the criteria for a qualified harbormaster as defined by the city charter, and receives yearly training from the Maine Harbor Masters Association as required by state law. In May of 2024 the city manager, without citing any cause at all, prevented the assistant harbormaster from completing his legal obligation to review UNE's application for a new pier.

The document "*Exhibit A*" is a copy of the email the city manager sent to Mr. Desmaris notifying him that he was officially prevented from reviewing the UNE application, and also that Mr. Desmaris was forbidden to even speak about the project. Mr. Desmaris was and remains a professional harbormaster in good standing, up to date in his training, and not a single allegation has ever been made about him in regard to unethical or unprofessional behavior. Yet the city manager removed him arbitrarily and capriciously, without cause, as shown by the lack of any supporting information in Mr. Bennett's email to Mr. Desmaris.

The city planner's job requires him to know that Biddeford's harbor ordinance is clear: (Subsection b) "Permission for the construction of any new wharf or pier within the jurisdictional limits of the City shall not be granted without approval of the Harbormaster…"

Further, the city planner knew that in June of 2024 the Maine Harbor Master Association had reminded the city that the assistant harbormaster is a qualified harbormaster himself. "Assuming the harbormaster is unable to perform his duty for whatever reason, it usually falls to the assistant harbormaster to perform said duties." (Document: "Exhibit B")

Perhaps most important, the Association also reminded the city that skirting the harbor ordinance, which requires a harbormaster to review UNE's application, was "inconsistent with the prevailing law." (Document: Exhibit B)

During its meetings, the Board had made it very clear that proper harbormaster review was one of their top concerns. During Planning Board review, Mr. Angers stated several times that he wanted Biddeford's harbormaster to address the Board, which never happened. On May 21, Chair Plotkin asked about the ordinance requiring harbormaster approval (Audio file: "Exhibit C"). Also, she pointedly questioned the city attorney, clearly trying to establish for herself and her colleagues that a qualified harbormaster had approved UNE's application (Audio file: "Exhibit D"). Mr. Dubois said on May 21, "I still want more information about the harbormaster's involvement in this review process." (Audio file: "Exhibit E")

The city planner and city solicitor both knew that Mr. Desmaris is a professional harbormaster, that his honor and ability have never been questioned, that the ordinance states no new pier can be built without approval of a harbormaster, that the Maine Harbor Masters Association made it clear evading Biddeford's harbor ordinance is illegal, and that the Planning Board was seeking confirmation that UNE's application had been approved by a harbormaster.

Both the planner and the solicitor failed to correctly advise the Planning Board on this question, rendering the Board's understanding of this key issue incomplete and incorrect. And the Board itself had been supplied with "*Exhibit B*," and therefore knew that the Maine Harbor Masters Association had informed the city that failure to perform harbormaster review of UNE's application was illegal.

2. UNE stonewalled Board

UNE repeatedly refused to make public the application it filed with the National Institute of Standards and Technology (NIST), the application that sought $3.5 million in federal taxpayer funding to help pay for their proposed pier. Those who petitioned for a copy of

that application contend that whatever representations the university made about regulatory review should be available for public inspection.

Planning Board member Patoine requested that UNE submit a copy of the application (Audio file: "*Exhibit F*"). The Chair commented at length about the need for full documentation, citing the Code of Ethics that requires Board members to make sure they have all documents necessary to make correct decisions, and requested "all those documents." (Audio file: "*Exhibit G*")

UNE refused to provide the NIST application, simply telling the city planner that the Planning Board Review didn't need to see it. The Board knew that it had specifically requested the NIST application, yet deviated from its own Code of Ethics by approving UNE's application without seeing documents it had requested.

3. Board ignored missing "sign off"

On June 25, 2024, Army Corps engineer Heather Stukas wrote to her colleagues that they needed to "follow up with Biddeford Harbormaster to ensure the new concept is acceptable." The Planning Board was supplied with a copy of the original Stukas email, and then was supplied with testimony pointing out that the "sign-off" by Harbormaster Lariviere was never secured by the U.S. Army Corps of Engineers.

4. Solicitor gave Board false information

As previously noted, during its meetings the Board's desire to know that a harbormaster had approved UNE's application was unambiguous. To establish the fact, the Chair painstakingly questioned the city solicitor to confirm that a harbormaster had approved UNE's application (Audio file: "Exhibit D"). The solicitor told the Chair four times that YES, a harbormaster had approved UNE's application. That was false.

After he improperly and without cause removed the assistant harbormaster from Biddeford's regulatory review of UNE's pier, the city manager hired Wayne Duffett, a civil engineer from South Portland, as a regulatory fig leaf. Mr. Duffett's task was to review paperwork, for which he was paid $2,800. The city manager had already been told by the Maine Harbor Masters Association that his scheme to go around the harbormaster and assistant harbormaster was "inconsistent with the prevailing law," but he went ahead with it anyway.

In Maine the term "harbormaster" is very specific, and refers to a professional who knows local waters very well. Biddeford's harbor ordinance requires that a harbormaster meet the following criteria:

- Must be a voting resident of five years;

- Must have at least five years of marine experience with a minimum of two years on the ocean; and
- Must attend annual Maine Harbormasters Association training seminar.

Maine state law is very specific about the training a qualified professional harbormaster must have:

"A person appointed or reappointed a harbor master or deputy harbor master who has completed the basic training course under subsection 1 shall complete, at a minimum, 8 hours of training every 3 years to maintain certification as a harbor master or deputy harbor master. The training requirement of this subsection may be met by completing continuing education training offered or approved by a statewide harbor masters association that represents Maine harbor masters."

Wayne Duffett, the civil engineer the city planner hired as a fig leaf, is not a harbormaster. In June of 2025, the Maine Harbor Masters Association confirmed that he is not a harbormaster (Document: "Exhibit H").

On May 21, 2025, when she was quizzing the city solicitor and referring to Mr. Duffett, the Chair did not ask the solicitor pointedly if a qualified civil engineer had approved UNE's application. Rather, she asked pointedly if a ***harbormaster*** had approved UNE's application. The solicitor told her and the Board four times that YES, a harbormaster had approved UNE's application. Here's the transcript of his inaccurate legal analysis:

> Chair: "So to be clear, a Harbormaster has approved this application."
> City Solicitor: "Yes, yes."
> City Solicitor: "Not necessarily *the* Harbormaster that we had in place before, but an interim Harbormaster that was assigned…"
> Attoney: "Yes."
> City Solicitor: "…in their stead."
> Attorney: "Yes."
> City Solicitor: "OK. I'm just trying to understand that."
> Attorney: "Yes. It should be in the package, but if not I can get it to you."

On this point of critical interest to the Planning Board, the city solicitor misinformed and thus misled the Board. Their understanding of this key issue was corrupted.

5. Board ignored crucial testimony

During the Planning Board review in 2025, Biddeford resident Matthew Haas presented written and oral testimony to the Board warning them that UNE was bound by a 2001 decision by the Saco River Corridor Commission (SRCC). That decision prevents UNE from

building anything in a 250 foot buffer protecting the entire riverfront shoreline on what is known as Lot #4. The access road UNE asked the Planning Board to approve (Document: "Development violates SRCC buffer") sits squarely within that 250 foot buffer. The creation of the buffer came about as follows.

In 2001, UNE wanted to build two dormitories to a height of 50 feet, rather than a previously approved 35 feet. The synopsis of what happened is that the Saco River Corridor Commission granted the change to 50 feet high, while securing a permanent 250 foot buffer along the entire riverfront of "Lot #4" that would protect the land from future development. UNE got the dorms they wanted, and the Commissioners got the "quid pro quo" they wanted.

Minutes from SRCC meetings in 2001 show the clear intent of the Commissioners to permanently protect this environmentally sensitive area of the Saco River shoreline. They illustrate UNE's unambiguous endorsement of the same goal. Finally, the minutes document the action that the Commission took to put the permanent buffer protection in place.

Excerpts from SRCC minutes, 2001.06.27

- "Mr. Heard pointed out the role of the Commission which is to protect the rural, scenic, and open space character of the corridor."
- "Mr. Johnston stated that it is clear to him from past testimony that this area is an environmental sensitive area…"
- "Mr. Libby stated that he felt he would like to wait on making a decision to see if the University of New England would be willing to commit to some sort of 250 foot no-build easement along their property to offer additional protection to the area."

Excerpts from SRCC minutes, 2001.07.11

- "Ms. Sandra Featherman, President of the University of New England, was present at the meeting and made a brief speech regarding the importance of this project to the university."
- "A concern of Mr. Finn was that although all conversation this evening focuses on the 250 foot buffer of vegetation between the river and the proposed residence halls…"
- "Mr. Heard stated that…He wants to be assured that the corridor will be protected from future incompatible development."
- "Mr. Libby again pointed out that all through past conversations…the university has stated again and again that the 250 foot buffer will never be touched."
- "Mr. Towns further stated if the university is sincere about retaining that buffer for visual impact purposes, than the applicant should have no problem placing that land under protection from future development."

- "Mr. McNeil stated that the buffer had everything to do with the Commission granting the approval for the residence halls at a height of 35 feet."
- "Ms. Featherman stated that the University of New England has absolutely no plans to build within 250 feet of the river, and that the city as well as the university believe this buffer to be very sensitive and necessary for the protection of the river."
- "Mr. Libby responded that he feels visual impact will be reduced with continued tree growth and preservation of the 250 foot buffer.
- "Mr. Johnston made a motion to approve the amendment request submitted by the University of New England to construct the two previously approved 35 foot tall residence halls at a height of 50 feet. Included with this motion is a condition, as allowed under Section 959-B of the Act, that the University retain a 250 foot wide vegetative buffer from the river."
- "Mr. Johnston amended his motion to require a 250 foot no development buffer for the entire lot."
- "The Commission vote was 9 yes and 1 no which approved the application."

Excerpts from SRCC minutes, 17.06.28

- "UNE received an SRCC permit in 2001 that established a 250' buffer to the river that is campus-wide (see attached as Exhibit A)."

On May 21, 2025, SRCC confirmed buffer exists

SRCC staffer Haley Lachance wrote to Matt Haas that in 2001 "…the Commissioners expressed a desire to ensure continued protection of the 250-foot buffer, regardless of municipal standards, which were subject to change. The result of that discussion was a condition placed on Permit 20-209 that required a 250-foot no-development buffer along the shoreline of the entire lot (Lot 4). Over the next 16+ years, as applications were reviewed on the subject lot, discussions typically mention this 250-foot no development buffer."

On September 7, 2025, SRCC confirmed buffer has "effect of law"

Asked exactly what the Commissioners approved on July 11, 2001 SRCC's executive director Cheri Dunning informed the appellants that, "…the precise language of that condition was:

"'*3. The applicants are hereby required to retain and maintain a 250 foot wide vegetative buffer along the entire shoreline of the property, measured horizontally starting from the mean high water line and proceeding inland, described herein (Lot #4, Biddeford Property Map #52). Failure to do so will result in revocation of Permit #20-209 and all subsequent amendments.*'"

The preceding language was not a suggestion, it was an order. Quoting the Act that created the Saco River Corridor Commission, Dunning made it clear that this was an order that applied to the entirety of Lot # 4, the land on which the Biddeford Planning Board in 2025 cleared UNE to build a new access road: '*For the purpose of enforcement, permits issued by the commission and conditions thereof shall be considered as orders of the commission.*'"

Also, Dunning left no doubt that the order issued by the Saco River Corridor Commission in 2001 is, in effect, state law. Again quoting the legislative Act that created the Commission, she wrote, "11. Effect of standards, rules and orders. Standards, rules and orders issued by the commission pursuant to this chapter have the force and effect of law.'"

The Biddeford Gazette confirmed all of this information on October 14, 2025, in its story, "UNE pier approval tainted by glaring SRCC mistake."

The 250 foot "no build" buffer where UNE wants to build a road still exists, established by the SRCC in 2001. ***The Board is compelled by its Code of Ethics to consider all documents submitted and all oral testimony. Matt Haas provided both***. Presented with specific information that the proposed access road is where new construction is specifically prohibited, **the Board took no action at all**. It failed to seek information that would confirm or refute that a 250 foot "no build" buffer exists. **The Board violated its Code of Ethics**.

Building an access road on Lot #4 is against the law

In the environmentally sensitive area that UNE's president agreed was "very sensitive and necessary for the protection of the river," the Planning Board approved new paving and impervious surfaces totaling 0.25 acres, and it approved site grading, drainage construction, construction of stormwater construction measures, a runoff area that "will not be managed for water quality," and an underground pipe. Vehicles will driving right down to the riverfront. The pier will be lit. Increased runoff, or "outfall," will flow into the Saco River and Atlantic Ocean. (See blue access road in attached chart, "Development violates SRCC order")

The Planning Board was entitled to know that UNE's proposal contains elements that are illegal. The city solicitor is charged with correctly advising the Planning Board on all matters of law with which the City of Biddeford must comply --- local, state and federal. Through all the Planning Board meetings that considered UNE's pier application, the city solicitor never advised the Board that UNE's proposal for an access road is in violation of state law.

6. **Board ignored flaw in application**

The location in which UNE wants to build its pier is unavailable to the university. Other parties, mooring owners, already occupy that space on the river. The mooring owners

submitted two letters to the Planning Board confirming that they would not agree to move their moorings.

Sec. 74-49 of the harbor ordinance states, "The harbormaster shall settle all mooring disputes in the harbor." Well before the Planning Board approved UNE's application, Biddeford's harbormaster wrote to the mooring owners who had submitted information to the Board. He told them he had no plans to relocate them, and that they were in good standing and could expect to keep their moorings.

The letters from the mooring owners (Documents: "*Exhibit I*" and "*Exhibit J*"), and the email from the harbormaster to the mooring owners (Document: "*Exhibit K*"), were submitted to the Planning Board. Therefore, the Board knew that the location UNE wants for its pier is unavailable to the university.

The Code of Ethics requires that all Planning Board decisions must be rational and also perceived as rational. By approving an application in an unavailable location, the Planning Board failed both tests.

7. Legal advice to Board fundamentally unsound

The city solicitor is married to an incorrect interpretation of the following language in the harbor ordinance, an interpretation he refuses to abandon. The misinterpreted language:

(Subsection d) "The process to obtain permission for any new wharf or pier shall be facilitated by the Harbormaster. Initially, the Harbormaster shall be available to guide the applicant through the application process and finally, to sign off that all regulatory approvals have been obtained for construction."

Somehow this language led the solicitor to a nonsensical conclusion, which he summed up for the Planning Board, "…the harbormaster role is nothing but a facilitator." That is not accurate. The ordinance does not do what the solicitor says it does --- it does not place any sort of limitation on the harbormaster.

In fact, Biddeford's harbor ordinance is clear: (Subsection b) "Permission for the construction of any new wharf or pier within the jurisdictional limits of the City shall not be granted without approval of the Harbormaster…"

The appellants consulted with an attorney recently retired from a state Attorney General's office (not Maine). He is a graduate of Harvard Law School, and spent decades studying local, state and federal statutes. One of those cases he argued in front of the United States Supreme Court. He watched video of the solicitor instructing Biddeford's Planning Board, and reviewed the memos that the solicitor supplied to the Board. Here is his analysis:

"The City Solicitor's reading of the ordinance relegates the harbormaster's role to that of a rubber stamp, as if the requirement for harbormaster permission in subsection (b) is just a meaningless formality, a foregone conclusion. His interpretation of subsection (d) might lead ordinary folks to believe, or to be persuaded, that the harbormaster isn't much of anything, possibly even a joke.

"The Solicitor seems to acknowledge that subsection (b) creates a problem for him. If he's suggesting that the ordinance contradicts his interpretation, he's right about that. But if he's suggesting that the ordinance itself is self-contradictory, he is mistaken.

"There is no inherent contradiction between the requirement of the harbormaster's permission in subsection (b) and a separate requirement in subsection (d) that the application process 'shall be facilitated by the Harbormaster,' who 'shall be available to guide the applicant through the application process, and 'sign off that all regulatory approvals have been obtained for construction.'"

"Subsection (d) requires that the harbormaster make the application process as friendly as possible for the applicant, but it does not go so far as to require the harbormaster to grant every application. The requirement that the harbormaster make himself 'available' to 'sign off that all regulatory approvals have been obtained' does not, by any means, relieve the applicant of the need to obtain the requisite approvals, including the permission of the harbormaster, as required by subsection (b).

"If the Solicitor's reading were correct, the harbormaster would be obligated to approve every application, no matter how absurd the application, no matter how disruptive or damaging to the harbor and those who depend on it."

The solicitor continues to claim that the harbormaster has absolutely no role reviewing factors like tides, water depth, currents, other moorings in the area, extreme storms, etc., when reviewing applications for projects like a 170 foot pier. He expects Biddeford people to believe that the harbormaster is a mere bureaucrat, charged only with making sure an application contains the correct documents.

It's common knowledge that a harbormaster in Maine has very important duties that can only be performed after acquiring years of first hand, practical experience on the water. Harbormasters are highly qualified professionals. Biddeford's harbormaster is not restricted to shuffling paperwork, and language in the ordinance makes that clear.

What is especially concerning is the appearance of advocacy to steer the Planning Board to a particular outcome. On several occasions, the solicitor inserted non-existent language into

his descriptions, as he "quoted" the ordinance to his client, thereby misleading the Planning Board to believe such language is in the ordinance --- when it is not. Two examples:

- The solicitor wrote to the Board on June 9th: "The harbormaster's role in reviewing pier applications pursuant to city code Section 74-35 is limited to the Harbormaster being 'nothing but a facilitator.'" Clearly he was trying to sound authoritative, and by putting the phrase "nothing but a facilitator" in quotes, any reasonable person would assume that he was quoting from the ordinance. No such limiting language appears in the ordinance! The Board was misled.
- On May 21, the solicitor told the Board in a meeting (Audio file: "Exhibit L") that, "Section 74-35, of the code of ordinances, provides the criteria for the approval, and states at the last paragraph, 'the harbormaster is a mere facilitator who guides the applicant through the process.'" By listening to the audio file, it is plain the solicitor addressed the Board as if he were authoritatively quoting from the ordinance. But the ordinance says no such thing, and it certainly doesn't contain the phrase "mere facilitator." That language is not in the last paragraph, as the solicitor stated, nor is it in any paragraph. It is limiting language that the solicitor should not have implied was written in the ordinance. It should never have been presented to the Board as factual. Any reasonable person would assume he was quoting from the ordinance, therefore, the Board was misled.

In summary, anyone who can read the ordinance can see there is no inherent contradiction between the requirement of the harbormaster's permission in subsection (b) and a separate requirement in subsection (d), that the application process shall be facilitated by the harbormaster.

By forcefully and repeatedly claiming that there is a contradiction, and by falsely claiming that subsection (d) limits the role of the harbormaster, the city solicitor misled his client, the Biddeford Planning Board. He advanced the misconception that the harbormaster has no meaningful role in reviewing, denying, or approving applications for new piers within the city of Biddeford.

In addition, the city solicitor failed to explain to the Board that a harbormaster in Maine enforces not only the local ordinance, but also state and federal laws as well.

According to the Center for Law and Innovation at the University of Maine School of Law, "Harbormasters are focal points of harbor management for good reason: all the lines of delegated authority converge on them, and the lines of responsibility are correspondingly extended under their control." Also, "The regulation of a harbor is a three-way intersection where federal, state and municipal authorities meet, with a priority of powers in that order." Also, the harbormaster's "lines of duty intersect a web of federal and state laws."

And finally, “Local regulations cannot contradict the letter or intent of state or federal law. Municipal ordinances are supplementary.”

The city solicitor failed to inform the Board of a harbormaster’s broad duties and responsibilities, and his enforcement powers granted by local, state, and federal statutes. The solicitor painted an incredibly distorted and cartoonish picture that reduces the position of harbormaster to an irrelevant functionary, playing only a symbolic role, devoid of any responsibilities in the approval of piers within the City of Biddeford.

The solicitor’s viewpoint is absurd, and the Planning Board was poorly advised.

From: Bennett, James
To: assistant.harbor@biddefordmaine.org; west_wind_04005@yahoo.com
Subject: Notice of Decision
Date: Wednesday, May 22, 2024 1:28:01 PM

Randy,

Please see the following communication that I have forwarded to Paul. You are receiving a copy because it impacts you as well. The same directive regarding the UNE application applies to
you. Please feel free to reach out and contact me if you have any questions.

James A. Bennett
City Manager
Biddeford, Maine 04005
James.Bennett@Biddefordmaine.org
Phone 207.284.9313
FAX 207.571.0678

From: Daryen Granata <dgranata@maineharbormasters.org>
Sent: Tuesday, June 4, 2024 11:34 AM
To: james.bennett@biddefordmaine.org
Subject: Harbor Master Protem question

Dear Mr. Bennett:

Thank you for reaching out to the Maine Harbormasters Association concerning the question of a 'Harbormaster Protem' for the City of Biddeford. Our Board is unaware of any precedent for such a position in the Association's jurisdiction. Review of the relevant state law, specifically Title 38, Chapter 1 of the Maine Revised Statutes, contains no provision regarding such a position. To do so would be inconsistent with the explicit state law. Harbormasters must be appointed for a term of not less than one year and are subject to all the duties and liabilities of that office as prescribed by state law, municipal ordinances and regulations adopted by the municipal officers, municipal harbor commissioners, municipal port authorities or other such bodies empowered to regulate municipal harbors.

I understand that the genesis for your inquiry centers around a pending proposal by the University of New England to construct some form of waterfront access. Section 74-35b of the Biddeford Harbor Ordinance states, "permission for the construction of any new wharf or pier within the jurisdictional limits of the City shall not be granted without approval of the Harbormaster, along with federal, state and local governing authorities." Assuming the harbormaster is unable to perform this duty for whatever reason, it usually falls to the assistant harbormaster to perform said duties. If there is no assistant or if the assistant also is unable to perform this duty, it is not uncommon for a Harbor Commission to perform this function. In fact, Section 74-62a of your harbor ordinance makes it very clear that the Biddeford Harbor Commission "…shall meet to hear appeals of decisions made by the Harbormaster and to act as an advisory vehicle for any construction from the mean high-water line down…".

The Maine Harbormasters Association discourages you from pursuing a 'protem' harbormaster as it is inconsistent with the prevailing law. Instead, we recommend that you work within the review hierarchy laid out in your harbor ordinance.

Thank you for contacting us for guidance in this matter. Please contact me if you have further questions.

Thanks,

Daryen Granata
Vice President & Training Coordinator

Maine Harbor Masters Assoc.
PO Box 1515
Scarborough, ME 04070

dgranata@maineharbormasters.org
https://www.maineharbormasters.org/home

An email from the Maine Harbor Masters Association making it clear Wayne Duffett is not a Harbormaster:

From: Maine Harbor Masters Assoc. Info <info@maineharbormasters.org>
Sent: Tuesday, June 17, 2025 1:14 PM
Subject: Inquiry

The Maine Harbor Masters Association has no record of Mr. Wayne Duffett attending Basic Harbor Master Training and Certification.

Thanks MHMA Board of Directors.

Thanks,

Maine Harbor Masters Assoc.
PO Box 1515
Scarborough, ME 04070

info@maineharbormasters.org
https://www.maineharbormasters.org/home

STATE OF MAINE
HARBOR MASTER'S
ASSOCIATION

Letter of Notice

To the Biddeford City Planning Board
Wednesday, May 21, 2025

We The Undersigned are mooring owners on the Biddeford side of the lower Saco River, either directly on, or in very close proximity to, the physical site proposed by the University of New England (UNE) for their new marine sciences research pier. We are joined in this Letter of Notice by the former Harbormaster of Saco, Maine, who holds a Master's License from the United States Coast Guard. We are in solidarity with each other in regard to this obvious conclusion:

UNE has proposed a location for its pier that is unavailable. And therefore the Planning Board's hands are tied --- you are unable to approve their application.

Explanation

Several of us have already written to regulatory authorities stating quite plainly that we have no intention of moving our moorings. Those moorings are personal property. Commercial moorings can even be assigned in estate documents to our heirs. As long as we pay our mooring fees and operate responsibly on the river, our property cannot be seized.

The Harbormaster is no longer part of Biddeford's review of the UNE application. Therefore, only the Planning Board and the Biddeford City Council have any remaining authority. For the Planning Board to approve UNE's application, it would first need to know that the location UNE has proposed for its pier is available. That requires the Council to consider and pass a motion that directs the Harbormaster to seize the personal property of the Undersigned. Or perhaps vote to begin eminent domain proceedings.

If the City orders the Harbormaster to seize our property, we believe the Harbormaster may refuse the order. If the City moves to fire the Harbormaster because he refuses such an order, litigation is possible. If the Council directs City Staff to somehow bypass the Harbormaster and try to seize any mooring, litigation is certain. If UNE sues Biddeford, seeking to force the City to seize the personal property of the Undersigned, a complex and multi-year legal saga will begin.

Biddeford cannot afford the expense of a tortuous, years-long legal battle with mooring holders that it's very likely to lose. Nor has UNE explained to the Planning Board how it plans to forcibly remove the current mooring owners.

In its application UNE merely writes, "*To address impacts to moorings, GEI and UNE are prepared to work with City staff as necessary to allow for mooring adjustments to accommodate the proposed pier.*" That sentence is meaningless. UNE has no signed agreement with mooring owners. *It's not going to get a signed agreement with mooring owners.* To repeat, we're not moving. Therefore, UNE has proposed building a pier in a location that is unavailable. Their application is incomplete.

Through no fault of its own, the Biddeford Planning Board is unable to approve UNE's application as currently submitted.

Mooring #: 12 THOMAS J. HATCH

Mooring #: 150 Robert Brackett

Mooring #: 138 Gregg McPherson

Mooring #: 48 William Mitchell

Mooring #: 126 CAPT SHAWN TIBBETT

Mooring #: 46 Michael RAMONDO

Mooring #: 248 Steven L Goebel

Dan Chadbourne
Former Harbormaster, Saco, ME

Letter
from Biddeford mooring holders

James Herbert, President
University of New England
11 Hills Beach Road
Biddeford, Maine 04005

June 30, 2025

Mr. Herbert:

On July 1 of last year, Sarah Delage told the Press Herald, "UNE has proceeded in good faith and with full transparency." While accusing locals of "outright false statements" in your infamous and widely circulated email of May 27, 2025, you encouraged your beloved cognoscenti not to hesitate contacting you "with any questions."

We have one.

We are the local mooring owners. We will all be affected by your proposed pier location, and two of us sit directly *on* your coveted location. *None of us are moving*.

The current Biddeford Harbormaster is still the Harbormaster. He is definitely not moving us. The Assistant Harbormaster won't be moving us. After the disgraced former city manager, in cahoots with your attorney, disemboweled the normal review process set out by city ordinance, the Harbor Commission hasn't even met --- so they won't be moving us. The new city manager isn't even on the job yet, so she won't be moving us. The Mayor has no relevant official powers, so he won't be moving us. The City Council represents the People, not the Powerful --- therefore we are *extremely* confident that they will not pass new orders directing Staff to bully us out of the way.

Your PR plate spinners can save their breath repeating the offer to pay for mooring relocation. That non-solution was dead on arrival long ago. Our question is *when, against whom, and on what legal* basis will you be filing litigation to bulldoze mooring owners out of the way?

Please put the answer to this question on the record and in the public realm in time for the next Planning Board meeting during which you will ask for approval of your application. In recognition of your May 27 offer to answer any questions, we are hereby asking to have the university president's answer to our question by the close of business on Friday, July 11th. If you would, please send that communication to John Schafer, the Biddeford resident and community organizer who has been raising concerns about transparency (or lack of it) in the regulatory process. His email address is HillsBeachJohn@yahoo.com.

Thank you.

Mooring #: 126 SHAWN TIBBETTS

Mooring #: 240 STEVE GOBEIL

Mooring #: 150 ROBERT BRACKETT

Mooring #: 46 MICHAEL RAMUNNO

Mooring #: 12 THOMAS J. HATCH

Mooring #: 138 GREGG McPHERSON

Mooring #: 48 WILLIAM MITCHELL

From: Paul Lariviere
Sent: Saturday, April 12, 2025 10:36 AM
To: Seven mooring owners, lower Saco River, Biddeford, Maine

Good morning.

Several mooring owners in the lower part of the Saco River have recently expressed concerns to me about the imminent removal or relocation of their mooring. You may have a similar concern. I am writing to let you know that, as Harbormaster, I have no plans to remove or relocate any existing mooring.

My records indicate that you are a mooring owner in good standing, your fees are paid up to date, and there have been no navigation issues connected to your boating activities on the river. If you ever have any questions about the status of your mooring, please feel free to contact me.

Paul Lariviere
Harbormaster
Biddeford, Maine

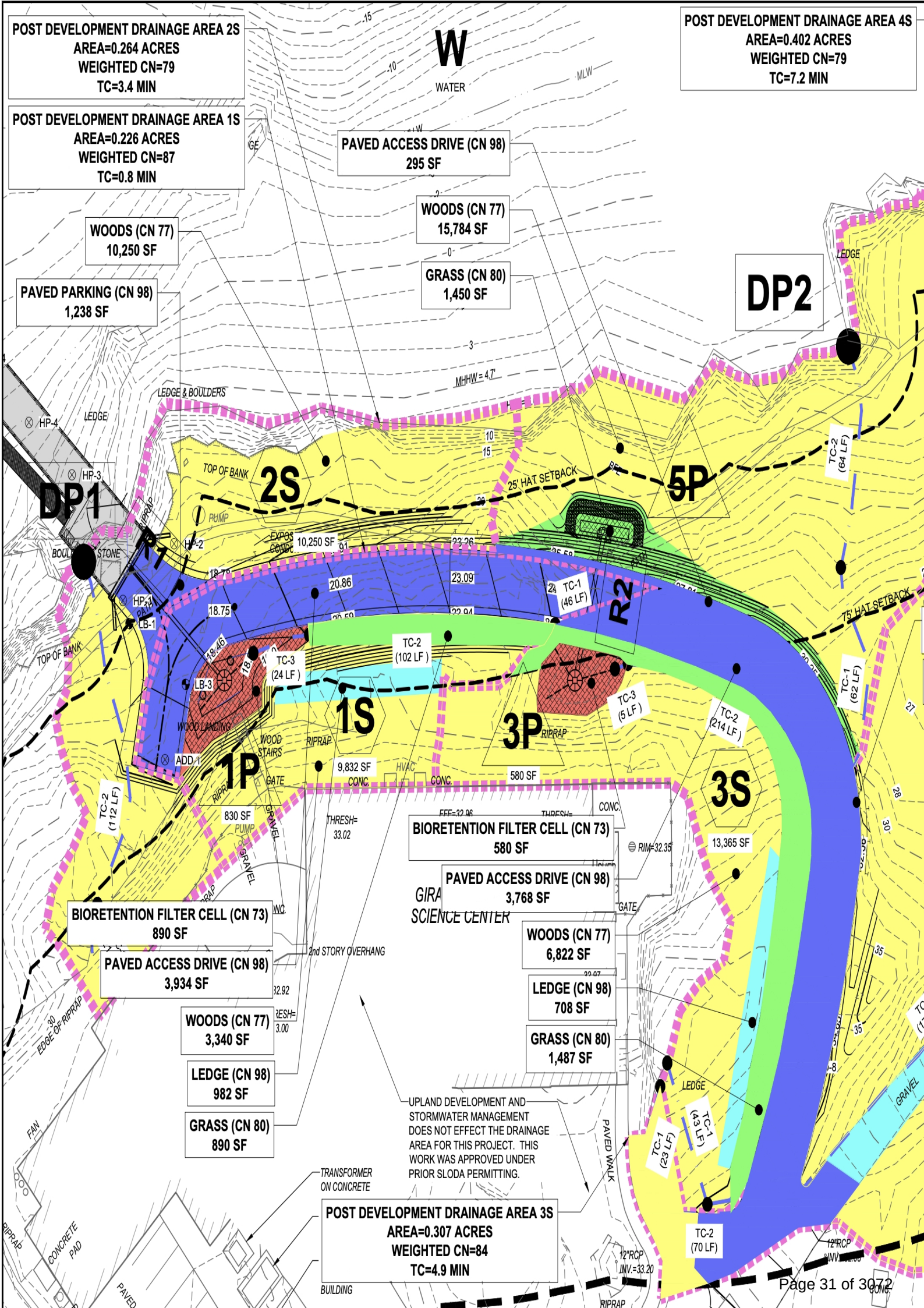
POST DEVELOPMENT DRAINAGE AREA 2S
AREA=0.264 ACRES
WEIGHTED CN=79
TC=3.4 MIN
POST DEVELOPMENT DRAINAGE AREA 1S
AREA=0.226 ACRES
WEIGHTED CN=87
TC=0.8 MIN
POST DEVELOPMENT DRAINAGE AREA 4S
AREA=0.402 ACRES
WEIGHTED CN=79
TC=7.2 MIN
W
WATER
PAVED ACCESS DRIVE (CN 98)
295 SF
WOODS (CN 77)
15,784 SF
GRASS (CN 80)
1,450 SF
WOODS (CN 77)
10,250 SF
PAVED PARKING (CN 98)
1,238 SF
DP1
DP2
2S
5P
1S
3P
1P
3S
R1
R2
LEDGE & BOULDERS
LEDGE
TOP OF BANK
25' HAT SETBACK
75' HAT SETBACK
MHHW = 4.7'
MLW
HP-1
HP-2
HP-3
HP-4
LB-1
LB-3
ADD-1
PUMP
RIPRAP
STONE
EXPOS CONDC
10,250 SF
TC-1 (46 LF)
TC-2 (64 LF)
TC-2 (102 LF)
TC-3 (24 LF)
TC-3 (5 LF)
TC-1 (62 LF)
TC-2 (214 LF)
TC-2 (112 LF)
WOOD LANDING
WOOD STAIRS
GATE
GRAVEL
9,832 SF
CONC.
HVAC
580 SF
830 SF
THRESH= 33.02
BIORETENTION FILTER CELL (CN 73)
580 SF
PAVED ACCESS DRIVE (CN 98)
3,768 SF
RIM=32.35
13,365 SF
SCIENCE CENTER
BIORETENTION FILTER CELL (CN 73)
890 SF
PAVED ACCESS DRIVE (CN 98)
3,934 SF
2nd STORY OVERHANG
WOODS (CN 77)
3,340 SF
LEDGE (CN 98)
982 SF
GRASS (CN 80)
890 SF
WOODS (CN 77)
6,822 SF
LEDGE (CN 98)
708 SF
GRASS (CN 80)
1,487 SF
UPLAND DEVELOPMENT AND STORMWATER MANAGEMENT DOES NOT EFFECT THE DRAINAGE AREA FOR THIS PROJECT. THIS WORK WAS APPROVED UNDER PRIOR SLODA PERMITTING.
TRANSFORMER ON CONCRETE
POST DEVELOPMENT DRAINAGE AREA 3S
AREA=0.307 ACRES
WEIGHTED CN=84
TC=4.9 MIN
BUILDING
PAVED WALK
TC-1 (23 LF)
TC-1 (43 LF)
TC-2 (70 LF)
12"RCP INV.=33.20
EDGE OF RIPRAP
CONCRETE PAD
FAN

On Monday, October 20, 2025 at 04:47:04 PM EDT, <cheri@srcc-maine.org> wrote:

To whom it may concern:

Several statements in the press release/email below require clarification or correction, so far as they mention or refer to the Saco River Corridor Commission. Any interested parties may contact srcc@srcc-maine.org with specific questions.

A more formal comment may also be issued, but for the moment, please note the following:

1. To the knowledge of its staff, the Saco River Corridor Commission and the staff followed a correct and typical process for considering the application from UNE in August 2024, which was approved as Permit #20-491.
2. Permit #20-491, as granted by the Commission, remains valid and is neither under review nor in question at the SRCC office. No reconsideration petition was received, and there has been no finding of falsification in the application materials.
3. There was a condition placed on an amendment to a different UNE permit in 2001 (Permit #20-209), which was phrased as follows:

> "*The applicants are hereby required to retain and maintain a 250 foot wide vegetative buffer along the entire shoreline of the property, measured horizontally starting from the mean high water line and proceeding inland, described herein (Lot #4, Biddeford Property Map #52). Failure to do so will result in revocation of Permit #20-209 and all subsequent amendments*."

4. That condition appears to require that the University refrain from clearing vegetation within the 250-foot buffer without further permitting. The condition restricts the actions of the University, and not the subsequent actions of the Commission.
5. Since that condition was placed, the University has applied for several permits for development within the 250-foot buffer, and the Commission has granted some of those requests with full knowledge of this previous buffer condition. The permit application files, permit orders, and meeting minutes can be made available for review upon request.
6. It is the understanding of staff, as advised by counsel, that the Commission is not restricted from granting further permits for development within the 250-foot buffer by the above-stated 2001 permit amendment condition. The condition was created by, and thus can be altered by, the Commission.
7. While the 2001 amendment condition was not discussed during the evaluation of Permit #20-491 in August 2024, the existence of that condition would not have prevented the Commission from issuing a permit for the pier if the Commission found the project in line with the applicable regulations of the Saco River Corridor Act and its associated Chapters. The Commission granted the permit after such review. As it has not been overturned or revoked by any mechanism, the permit remains valid.
8. Staff did not have knowledge of the 2001 amendment prior to the August 2024 Commission meeting, and the 250-foot buffer condition was therefore not made part of the Commission's review materials. However, the omission of such information does not invalidate the Commission's decision.

In processing any application, SRCC staff endeavors to provide all potentially pertinent information to the Commission, but it is always possible that some information is unintentionally omitted or simply not available at the time of review. However, the staff is aware of no evidence of deliberate omission or falsification of information presented to the Commission during the review of Permit #20-491. It is the conclusion of the SRCC's staff that the Commission acted with correct procedures in this matter.

9. I am the Executive Director quoted in Mr. Schafer's email below, so I will note that we (the staff) have been attempting to explain the same facts of the matter stated here to all parties calling with questions. In any spoken conversation, misunderstandings can arise, and that appears to have happened here. While I don't recall using the word "mistake" in my conversation with Mr. Seaver, in any case, I would not have commented on the validity of any decision of the Commission. Additionally, I would clarify that "mistake" is not the correct word to use to describe staff actions, either, since normal procedures were followed throughout. Past permit research is an optional feature of the staff's process, and is not required by the Act or any Commission policy – it is conducted when time allows to provide context, or is researched to answer specific questions. Permit conditions that are applicable beyond the expiration date of a past permit are rare, and our staff plans to implement an additional tracking measure to bring similar longstanding conditions to the attention of the staff, so that they are more easily brought to the attention of the Commission at the time of a new application. The lack of this past permitting research in this case, or for any matter before the Commission, does not in any way invalidate the Commission's decision.

We will be happy to provide further clarification if anyone receiving this message would like to contact us. We can be reached M-Th 9 am-5 pm at 207-625-8123, and at srcc@srcc-maine.org.

Sincerely,

Cheri Dunning

Cheri Dunning, Executive Director

Saco River Corridor Commission

207-625-8123

cheri@srcc-maine.org

81 Maple St.(office)

P.O. Box 283 (mailing address)

Cornish, ME 04020-0283

---------- Forwarded message ---------
From: **Hills Beach John** <hillsbeachjohn@yahoo.com>
Date: Tue, Oct 21, 2025 at 11:17 AM
Subject: Re: UNE contradicts former UNE president and SRCC on critical environmental protection
To: Randy Seaver <randyseaver01@gmail.com>, wmtw@wmtw.com <wmtw@wmtw.com>, tvmail@wgme.com <tvmail@wgme.com>, desk@newscentermaine.com <desk@newscentermaine.com>, apmaine@ap.org <apmaine@ap.org>, ssharon@mainepublic.org <ssharon@mainepublic.org>, sean.a.murphy@charter.com <sean.a.murphy@charter.com>, cheri@srcc-maine.org <cheri@srcc-maine.org>
Cc: attorney.general@maine.gov <attorney.general@maine.gov>, liam.lafountain@biddefordmaine.org <liam.lafountain@biddefordmaine.org>, marc.lessard@biddefordmaine.org <marc.lessard@biddefordmaine.org>, william.emhiser@biddefordmaine.org <william.emhiser@biddefordmaine.org>, scott.whiting@biddefordmaine.org <scott.whiting@biddefordmaine.org>, rogerp.beaupre@biddefordmaine.org <rogerp.beaupre@biddefordmaine.org>, neva.gross@biddefordmaine.org <neva.gross@biddefordmaine.org>, dylan.doughty@biddefordmaine.org <dylan.doughty@biddefordmaine.org>, norman.belanger@biddefordmaine.org <norman.belanger@biddefordmaine.org>, stephen.stcyr@biddefordmaine.org <stephen.stcyr@biddefordmaine.org>, Truc Dever <truc.dever@biddefordmaine.org>

I'm sorry, but no statements in the press release (below) need correction.

Randy Seaver and the Biddeford Gazette have a solid reputation for reliable reporting. Beach residents contacted the Gazette this morning, and Mr. Seaver is standing by the accuracy of his notes taken during his conversation with you.

Your direct quote was, "It does appear that there was an omission of relevant information provided to the commissioners before last year's vote." And you also said you and your staff are "working to prevent similar errors in the future."

Your reply to my press release is astounding. In particular, point #9 is a naked attempt to justify that UNE could skate through rigorous review because your staff "did not have knowledge of the 2001 amendment prior to the August 2024 Commission meeting" in which UNE's pier application was approved.

Bottom line, you proclaim that the Commission is not bound by its previous decisions. "The lack of this past permitting research in this case, or for any matter before the Commission, does not in any way invalidate the Commission's decision." Do you now understand the widespread perception that regulatory agencies bent over backwards to freeze out public input and kowtow to the university?

I am asking you to forward my email to all current Commissioners. My associates and I have been in touch with the Commissioner who proposed the buffer in 2001, and a member of the public who testified at the meeting in which the buffer was approved, long before you arrived in Maine.

I'm sorry to say, you haven't heard the last of this issue.

Last but not least, I am compelled to ask about the letter you sent at 10:50 p.m. last night to Roby Fecteau, Biddeford's code inspection officer. You mentioned "recent misstatements or misleading statements" to him. I presume that to be an accusation against me or Mr. Seaver. Mr. Fecteau is managing the appeal process for the City of Biddeford, in which the Zoning Board of Appeals will hear an appeal by Biddeford citizens on November 13. The SRCC is not a party to the appeal, and I can't see that it had any business proactively communicating with Biddeford's ZBA.

On whose authorization did you send the letter last night? Are all your Commissioners aware that you sent the letter, and are you acting on their behalf? Did Biddeford's City Solicitor request that you submit the letter? Did UNE's corporate counsel request that you submit the letter?

I look forward to your reply.

John Schafer

Fecteau, Roby

From: Hills Beach John <hillsbeachjohn@yahoo.com>
Sent: Tuesday, October 21, 2025 11:36 AM
To: rschneider5@une.edu; Center, Harry; Fecteau, Roby
Cc: Lisa A. Gilbreath; Dever, Truc; Randy Seaver
Subject: Re: SRCC Staff Response to concerns about UNE Pier Permit (Permit #20-491)
Attachments: Schafer reply 10-21-25.pdf

Caution: This is an external email. Please take care when clicking links or opening attachments. When in doubt, contact the IT Department

Dear Roby, it seems highly unusual that the SRCC would proactively insert itself into a ZBA procedure in such a manner. However, the appellants have no objection to you including her communication in the ZBA packet, because we trust you and Truc Dever to make sure the process is fair.

After consulting with my beach neighbors, we are submitting the attached document. It is directly related to the SRCC's document sent last night, 4 days after the deadline submission, and it is a reply to Ms. Dunning's observations.

Thank you very much.

John Schafer

On Tuesday, October 21, 2025 at 09:41:19 AM EDT, Fecteau, Roby <roby.fecteau@biddefordmaine.org> wrote:

Good morning.

This correspondence came in at 10:50 last night. I will include it in the ZBA packet and the ZBA may consider it to the extent that it is argument relevant to a point on appeal.

Roby Fecteau

Director of Code Enforcement &

Emergency Management

City of Biddeford

205 Main Street Suite 104

Monday- Tuesday 7:00 am – 5:00 pm

Wednesday- Thursday 8:00 am- 4:00 pm

Friday- Closed

From: cheri@srcc-maine.org <cheri@srcc-maine.org>
Sent: Monday, October 20, 2025 10:50 PM
To: Fecteau, Roby <Roby.Fecteau@Biddefordmaine.org>
Cc: chairperson@srcc-maine.org; Dan Shorette <dan@srcc-maine.org>; Haley Lachance <haley@srcc-maine.org>
Subject: SRCC Staff Response to concerns about UNE Pier Permit (Permit #20-491)

Caution: This is an external email. Please take care when clicking links or opening attachments. When in doubt, contact the IT Department

Hello Roby,

I have found it necessary to write a staff-level response to recent misstatements or misleading statements about the permit granted to the UNE pier project by the Commission, as was put into an article recently in the online publication the Biddeford Gazette, and also sent to various audiences and news outlets via email. Please find my statements attached, which I hope will bring clarity and information to any Biddeford process or file that might benefit from them.

No other regulatory body is required to rely on the outcome of SRCC decisions (unless that is their policy), as each applies a different set of regulations, and the Saco River Corridor Act may be more or less strict than others that are applicable. The purpose of this letter is not to sway or convince any permitting deliberation – it is strictly to provide accurate information about SRCC, its permitting process, SRCC Permit #20-209 (issued in 2001), and the currently active SRCC Permit #20-491, for the UNE research pier.

Thank you,

Cheri

Cheri Dunning, Executive Director

Saco River Corridor Commission

207-625-8123

cheri@srcc-maine.org

81 Maple St.(office)

P.O. Box 283 (mailing address)

Cornish, ME 04020-0283

On Monday, October 20, 2025 at 04:47:04 PM EDT, <cheri@srcc-maine.org> wrote:

To whom it may concern:

Several statements in the press release/email below require clarification or correction, so far as they mention or refer to the Saco River Corridor Commission. Any interested parties may contact srcc@srcc-maine.org with specific questions.

A more formal comment may also be issued, but for the moment, please note the following:

1. To the knowledge of its staff, the Saco River Corridor Commission and the staff followed a correct and typical process for considering the application from UNE in August 2024, which was approved as Permit #20-491.
2. Permit #20-491, as granted by the Commission, remains valid and is neither under review nor in question at the SRCC office. No reconsideration petition was received, and there has been no finding of falsification in the application materials.
3. There was a condition placed on an amendment to a different UNE permit in 2001 (Permit #20-209), which was phrased as follows:

> "*The applicants are hereby required to retain and maintain a 250 foot wide vegetative buffer along the entire shoreline of the property, measured horizontally starting from the mean high water line and proceeding inland, described herein (Lot #4, Biddeford Property Map #52). Failure to do so will result in revocation of Permit #20-209 and all subsequent amendments.*"

4. That condition appears to require that the University refrain from clearing vegetation within the 250-foot buffer without further permitting. The condition restricts the actions of the University, and not the subsequent actions of the Commission.
5. Since that condition was placed, the University has applied for several permits for development within the 250-foot buffer, and the Commission has granted some of those requests with full knowledge of this previous buffer condition. The permit application files, permit orders, and meeting minutes can be made available for review upon request.
6. It is the understanding of staff, as advised by counsel, that the Commission is not restricted from granting further permits for development within the 250-foot buffer by the above-stated 2001 permit amendment condition. The condition was created by, and thus can be altered by, the Commission.
7. While the 2001 amendment condition was not discussed during the evaluation of Permit #20-491 in August 2024, the existence of that condition would not have prevented the Commission from issuing a permit for the pier if the Commission found the project in line with the applicable regulations of the Saco River Corridor Act and its associated Chapters. The Commission granted the permit after such review. As it has not been overturned or revoked by any mechanism, the permit remains valid.
8. Staff did not have knowledge of the 2001 amendment prior to the August 2024 Commission meeting, and the 250-foot buffer condition was therefore not made part of the Commission's review materials. However, the omission of such information does not invalidate the Commission's decision.

In processing any application, SRCC staff endeavors to provide all potentially pertinent information to the Commission, but it is always possible that some information is unintentionally omitted or simply not available at the time of review. However, the staff is aware of no evidence of deliberate omission or falsification of information presented to the Commission during the review of Permit #20-491. It is the conclusion of the SRCC's staff that the Commission acted with correct procedures in this matter.

9. I am the Executive Director quoted in Mr. Schafer's email below, so I will note that we (the staff) have been attempting to explain the same facts of the matter stated here to all parties calling with questions. In any spoken conversation, misunderstandings can arise, and that appears to have happened here. While I don't recall using the word "mistake" in my conversation with Mr. Seaver, in any case, I would not have commented on the validity of any decision of the Commission. Additionally, I would clarify that "mistake" is not the correct word to use to describe staff actions, either, since normal procedures were followed throughout. Past permit research is an optional feature of the staff's process, and is not required by the Act or any Commission policy – it is conducted when time allows to provide context, or is researched to answer specific questions. Permit conditions that are applicable beyond the expiration date of a past permit are rare, and our staff plans to implement an additional tracking measure to bring similar longstanding conditions to the attention of the staff, so that they are more easily brought to the attention of the Commission at the time of a new application. The lack of this past permitting research in this case, or for any matter before the Commission, does not in any way invalidate the Commission's decision.

We will be happy to provide further clarification if anyone receiving this message would like to contact us. We can be reached M-Th 9 am-5 pm at 207-625-8123, and at srcc@srcc-maine.org.

Sincerely,

Cheri Dunning

Cheri Dunning, Executive Director

Saco River Corridor Commission

207-625-8123

cheri@srcc-maine.org

81 Maple St.(office)

P.O. Box 283 (mailing address)

Cornish, ME 04020-0283

---------- Forwarded message ---------
From: **Hills Beach John** <hillsbeachjohn@yahoo.com>
Date: Tue, Oct 21, 2025 at 11:17 AM
Subject: Re: UNE contradicts former UNE president and SRCC on critical environmental protection
To: Randy Seaver <randyseaver01@gmail.com>, wmtw@wmtw.com <wmtw@wmtw.com>, tvmail@wgme.com <tvmail@wgme.com>, desk@newscentermaine.com <desk@newscentermaine.com>, apmaine@ap.org <apmaine@ap.org>, ssharon@mainepublic.org <ssharon@mainepublic.org>, sean.a.murphy@charter.com <sean.a.murphy@charter.com>, cheri@srcc-maine.org <cheri@srcc-maine.org>
Cc: attorney.general@maine.gov <attorney.general@maine.gov>, liam.lafountain@biddefordmaine.org <liam.lafountain@biddefordmaine.org>, marc.lessard@biddefordmaine.org <marc.lessard@biddefordmaine.org>, william.emhiser@biddefordmaine.org <william.emhiser@biddefordmaine.org>, scott.whiting@biddefordmaine.org <scott.whiting@biddefordmaine.org>, rogerp.beaupre@biddefordmaine.org <rogerp.beaupre@biddefordmaine.org>, neva.gross@biddefordmaine.org <neva.gross@biddefordmaine.org>, dylan.doughty@biddefordmaine.org <dylan.doughty@biddefordmaine.org>, norman.belanger@biddefordmaine.org <norman.belanger@biddefordmaine.org>, stephen.stcyr@biddefordmaine.org <stephen.stcyr@biddefordmaine.org>, Truc Dever <truc.dever@biddefordmaine.org>

I'm sorry, but no statements in the press release (below) need correction.

Randy Seaver and the Biddeford Gazette have a solid reputation for reliable reporting. Beach residents contacted the Gazette this morning, and Mr. Seaver is standing by the accuracy of his notes taken during his conversation with you.

Your direct quote was, "It does appear that there was an omission of relevant information provided to the commissioners before last year's vote." And you also said you and your staff are "working to prevent similar errors in the future."

Your reply to my press release is astounding. In particular, point #9 is a naked attempt to justify that UNE could skate through rigorous review because your staff "did not have knowledge of the 2001 amendment prior to the August 2024 Commission meeting" in which UNE's pier application was approved.

Bottom line, you proclaim that the Commission is not bound by its previous decisions. "The lack of this past permitting research in this case, or for any matter before the Commission, does not in any way invalidate the Commission's decision." Do you now understand the widespread perception that regulatory agencies bent over backwards to freeze out public input and kowtow to the university?

I am asking you to forward my email to all current Commissioners. My associates and I have been in touch with the Commissioner who proposed the buffer in 2001, and a member of the public who testified at the meeting in which the buffer was approved, long before you arrived in Maine.

I'm sorry to say, you haven't heard the last of this issue.

Last but not least, I am compelled to ask about the letter you sent at 10:50 p.m. last night to Roby Fecteau, Biddeford's code inspection officer. You mentioned "recent misstatements or misleading statements" to him. I presume that to be an accusation against me or Mr. Seaver. Mr. Fecteau is managing the appeal process for the City of Biddeford, in which the Zoning Board of Appeals will hear an appeal by Biddeford citizens on November 13. The SRCC is not a party to the appeal, and I can't see that it had any business proactively communicating with Biddeford's ZBA.

On whose authorization did you send the letter last night? Are all your Commissioners aware that you sent the letter, and are you acting on their behalf? Did Biddeford's City Solicitor request that you submit the letter? Did UNE's corporate counsel request that you submit the letter?

I look forward to your reply.

John Schafer

From: Hills Beach John <hillsbeachjohn@yahoo.com>

Sent: Friday, October 24, 2025 8:29 PM

To: Fecteau, Roby <Roby.Fecteau@Biddefordmaine.org>

Subject: time codes for sound files

Caution:This is an external email. Please take care when clicking links or opening attachments. When in doubt, contact the IT Department

Hi Roby, residents submitted 6 sound files as part of the ZBA appeal scheduled for Nov.13. The files were all drawn from the Planning Board meeting of May 21, 2025:

https://biddefordme.portal.civicclerk.com/event/266/media

Here is the schedule of the starting times for each of those sound files:

Exhibit C --- 02:15:24

Exhibit D --- 02:18:35

Exhibit E --- 02:01:49

Exhibit F --- 02:02:19

Exhibit G --- 02:03:02

Exhibit L --- 02:16:04

Have a great weekend.

John

NOTICE

To Biddeford's Zoning Board of Appeals

On September 4th, 2025. Biddeford resident John Schafer notified the City of Biddeford that he and "et al" would appeal the August decision by the Biddeford Planning Board to approve the University of New England's application.

On October 15th, 2025, on behalf of himself and the "et al" parties, Mr. Schafer filed arguments and exhibits to the City in advance of the ZBA hearing scheduled for November 13th, 2025. Those documents were share by the City with city solicitor Harry Center and UNE's corporate counsel Ron Schneider.

This document serves as notice that We The Undersigned are among the "et al" parties.

- Walter Alexander
  31 Bridge Rd
  Biddeford, ME 04005
- Kyle H. Noble
  Kyle H. Noble
  56 Hills Beach Road
  Biddeford, ME 04005
- MATTHEW HAAS
  36 MOUNTING HOUSE RD
  BIDDEFORD, ME 04005
- CAPT SHAW TIBBETT
  1655 POST RD WELLS ME
- Joseph P. Simmons.
  23 Sokokis Rd.
  Biddeford, ME. 04005
  mooring #22 - Mooper

ZBA or To whom it may concern:

I am writing on behalf of an application submitted to the Zoning Board of Appeals by John Schafer. I was intending to submit an application of my own, however, I found out that Mr. Schafer was in the process of doing so. Not wanting to overburden the city with multiple applications for the same cause, I figured it best to not submit one at the same time. Mr. Schafer informed me that the term "et. al." was used on the submitted application therefore everyone affected would be included. He also told me that he reached out via e-mail to the city's attorney, Harry Center, to reiterate the use of that term on the application.

Please make sure that you consider me as an affected party and part of the term "et. al." on the submitted application.

Abutting Neighbor,



Bernice Wermenchuk

2 Old Pool Road

Biddeford, ME 04005

Enclosed Copies

-Property abutter letter from UNE

-Application for appeal to ZBA submitted

-Mr. Schafer's correspondence to city attorney

Exhibit C

UNIVERSITY OF NEW ENGLAND

52/ 1/ / /2 OLD POOL RD
WERMENCHUK REALTY TRUST & WERMENCHUK, BERNICE G TRUSTEE
2 OLD POOL RD
BIDDEFORD, ME 04005

Dear Neighbors:

The University of New England is proposing to construct a pier from the shore in front of the Girard Marine Science Center into the Saco River to support academic and research activities and to provide a year-round, all tide access facility for small and shallow draw vessels, including the City's fireboat.

The proposed pier includes an approximately 130-foot long approach section extending from shore and an 80-foot long pier head section oriented roughly parallel to the direction of flow in the river. The pier consists of a concrete superstructure on steel pipe piles, with timber fender piles for vessel berthing and a gangway to provide ADA compliant access to the float system.

Additionally, an upland access road will be constructed, connecting the existing road at the MSC to the proposed pier, including associated site grading, drainage, and stormwater management features.

An application for this work has been submitted to James Bennett, City Manager, City of Biddeford, for review.

Respectfully,
Alan Thibeault
VP for University Operations

APPLICATION FOR VARIANCE OR
APPEAL TO BOARD OF ZONING APPEALS

CITY OF BIDDEFORD, MAINE

NAME OF APPELLANT John Schafer, et. al.

MAILING ADDRESS 24 Sky Harbor Drive

CITY OR TOWN Biddeford

TELEPHONE 207-294-2410 MAP N/A LOT N/A ZONE N/A

NAME OF OWNER University of New England

PROPERTY LOCATION Saco River

The undersigned requests that the Board of Appeals consider one of the following:

___ **Administrative Appeal** Relief from decision, or lack of decision, of the Code Enforcement Officer or Planning Board in regard to an application for a permit. The undersigned believes that (check one).

___ an error was made in the denial of the permit.
___ the denial of the permit was based on misinterpretation of the ordinance.
___ there has been a failure to approve or deny the permit within a reasonable period of time.
___ other Approval of UNE's proposed pier was illegally granted by the Planning Board on August 6, 2025. Members knew that a certified Harbormaster never reviewed the application, as required by ordinance. Other omissions contributed to Members knowing UNE's application was incomplete.

Please explain in more detail the facts surrounding this appeal (please attach a separate piece of paper). You should be as specific as possible so that the Board of Appeals can give full consideration to your case.

___ **Variance**

a. Nature of Variance: Describe generally the nature of the variance _____

In addition, a sketch plan of the property must accompany this application showing dimensions and shape of the lot, the size and locations of existing buildings, the locations and dimensions of proposed buildings or alterations, and any natural or topographic peculiarities of the lot in question.

Fw: FILED: appeal of Planning Board decision

Hills Beach John <hillsbeachjohn@yahoo.com> Thu, Sep 4 at 2:51 PM
To: Martin Grohman <martin.grohman@biddefordmaine.org>
Cc: Will Owen <wowen@maineharbormasters.org>, dgranata@maineharbormasters.org <dgranata@maineharbormasters.org>

----- Forwarded Message -----
From: Hills Beach John <hillsbeachjohn@yahoo.com>
To: Harry Center <hcenter@woodedlaw.com>
Cc: Truc Dever <truc.dever@biddefordmaine.org>; Randy Seaver <randyseaver01@gmail.com>
Sent: Thursday, September 4, 2025 at 02:37:20 PM EDT
Subject: FILED: appeal of Planning Board decision

Good afternoon, Harry.

I wanted to thank you for helping me out yesterday with important information and again, I'm sorry for having a hard time with the terminology on the city's website. I finally came to the correct understanding, and I did file the appeal with Roby Fecteau this afternoon and paid the required fee. The relevant documents are attached, please feel free to pass on to Mr. Schneider and UNE.

You'll notice that I filled out the application as "John Schafer & et. al." As an FYI, that's because I'm unlikely to be the captain on this effort. As you know, Mr. McCurry expressed an interest the other night, and I also heard from others in the community after the Council declined to remove Mr. Angers from the Planning Board. Several folks texted me, adamantly wanting this to go to appeal, so I was simply determined to take some action on their behalf before the deadline passed.

I had a great discussion with Roby. He told me that the ZBA hasn't met for three years, that it has all new members, and that they all need to receive training before this appeal can be heard. So I finally have a full understanding of the correct process, and I left his office with the impression that barring any complications, this appeal will be heard in early October. OK, that's all, thanks again for your help.

Sincerely,

JS

P.S. Ms. Dever, thank you as well for your responsiveness yesterday. I really appreciated it.
Appeal Application.pdf, Appeal Documentation.pdf

WOODMAN EDMANDS

ATTORNEYS-AT-LAW

ROBERT B. WOODMAN
THOMAS DANYLIK
RICHARD A. HULL, III
HARRY B. CENTER, II
JEFFREY S. ZDUNCZYK
KALEIGH M. GORMAN
STEPHEN C. PERRUZZA
RYAN C. HARKE

234 MAIN STREET
P.O. BOX 468
BIDDEFORD, ME 04005-0468
TELEPHONE: 207-284-4581
FAX: 207-284-2078
www.woodedlaw.com

Retired
RALPH W. AUSTIN
KEITH R. JACQUES

October 16, 2025

Roby Fecteau, CEO and ZBA Liaison
Code Enforcement Office, Biddeford City Hall
205 Main Street
Biddeford, ME 04005

RE: Appeal 2025.001 Administrative Appeal

Dear Roby:

Enclosed please find my submissions on behalf of the City of Biddeford's Planning Department and Planning Board. Electronic copies have been sent to your attention, with copies being sent to the University and the Appellant.

Thank you.

Sincerely,

Harry B. Center, II

HBC/cem
Enc.

CITY OF BIDDEFORD
ZONING BOARD OF APPEALS

RE: 2025.001	)	
	)	WRITTEN SUBMISSION ON BEHALF
JOHN SCHAFER, et al. Administrative Appeal of August 6, 2025 Planning Board Decision	)	OF CITY OF BIDDEFORD PLANNING BOARD/PLANNING DEPARTMENTS

BACKGROUND

Please accept the following on behalf of the City of Biddeford's Planning Department and Planning Board. I am Harry B. Center, II, City Attorney for the City of Biddeford, Maine. Throughout the process of the University of New England's Application to construct a marine pier, I have provided legal advice and support to the Planning Board, the Planning Department, as well as the City Manager's Office and in general the City of Biddeford. Accordingly, the City's Zoning Board of Appeals in order to maintain due process requirements, is represented by separate legal counsel. The following submission is advocacy for the denial of this Appeal.

STANDARD OF REVIEW

When the Zoning Board of Appeals Act in an appellate capacity, the Board is a quasi-judicial body, which reviews the decision of the Planning Board to determine whether the Planning Board committed an error of law or whether the Planning Board's decision is supported by substantial evidence in the record.

HARBORMASTER ISSUE

The issue of the City of Biddeford's Office of the Harbormaster being involved in this process is absolutely irrelevant to the Planning Board's Decision. The Planning Board reviewed the University's application to construct a marine pier pursuant to the City of Biddeford's shoreland, zoning ordinance, and site plan review ordinance. Nowhere in either of these ordinances is their reference to Harbormaster permission nor a requirement that an applicant to construct a marine pier as a condition precedent, demonstrate permission from the Harbormaster.

In addition to Land Use Regulations, the City of Biddeford has a Harbor Ordinance set forth and Section 74 of the Code of Ordinances. The provisions of City Ordinance 74–35 are irrelevant to the Planning Board Decision, that is the subject of this Appeal. The named appellant and other vocal opponents of the University pier project have raised this irrelevant issue throughout this process. Assuming, for the sake of argument, that Harbormaster permission is a condition precedent to the Planning Board's consideration of an application for a marine pier, the City complied with the provisions of its code.

The issues with Harbormaster Paul Larriviere are documented in a February 25, 2024 email sent by the named appellant in this matter, who formally served as Chairman of the Biddeford Harbor Commission. That email and a copy of the Harbor Commission Meeting Minutes from the February 23, 2024 meeting documents the illegal conduct of the Harbormaster and the Harbor Commission relating to the University of New England's peer project. The highlighted provision in the attachment demonstrates the bias and pre-judgment of the Harbormaster. Set for specifically the minutes contain the statement "most recently, Paul has denied approval of the UNE peer design". It was absolutely illegal, a violation of the University's due process, and contrary to well established State and Federal law, for a governmental official to "deny approval" of an application before the application was even filed. While there have been disputed factual claims regarding the Harbormaster's role in this matter, there can be no question that official minutes of a City Committee set forth and absolute clarity, the denial of due process by allegedly denying approval prior to the project even being submitted.

Regarding any City of Biddeford Harbormaster's permission pursuant to Ordinance 74–35, the Harbormaster's role is limited to being a mere facilitator to ensure that an applicant has obtained the requisite permission from all of the applicable governmental entities. Comments have been made that the City's Code provision at 74-35 is less than clear. When a legislative document needs to be interpreted, a review of the legislative intent is undertaken. As former Chair of the Harbormaster, the named appellant appeared before the City of Biddeford Policy Committee on August 7, 2023. During that meeting, the named appellant in this matter advocated for the current version of this Ordinance to be adopted by the Council's Subcommittee, to be forwarded to the full Council for adoption. The transcript of that August 7, 2023 meeting is attached. During that meeting, numerous times members of the Policy Committee asked the named appellant, whether the Harbormaster "issued the permit", or otherwise issued approval. The named appellant repeatedly stated that the role of a Harbormaster is more the role of a facilitator, and all the Harbormaster was doing is confirming that approvals by the other appropriate agencies had been obtained. Therefore, the alleged 2024 denial of permission or denial of approval of the pier design had absolutely no basis in law.

The sole review of the Harbormaster is to facilitate the Applicant through the approval process of other governmental agencies. The Harbormaster's refusal to grant permission was a failure to perform a ministerial act that was required once all other approvals were obtained. Because the Harbormaster refused to complete that ministerial act, the City used to utilize an independent marine engineering firm to facilitate the University's application, after the application was filed. That process occurred and was in the record before the Planning Board. There is no basis in law, fact, or legend to argue that the approval of the UNE project was somehow subject to the arbitrary and animosity of Paul Larriviere with the University of New England.

THE APPELLANT LACKS STANDING

"Standing is a threshold issue and Maine courts are "'only open to those who meet this basic requirement.'" *Lindemann v. Comm'n on Governmental Ethics & Election Practices*, 2008 ME 187, ¶ 8, 961 A.2d 538 (quoting *Ricci v. Superintendent, Bureau of Banking*, 485 A.2d 645,

647 (Me. 1984)). "[T]he question of whether a party has standing to bring an administrative appeal depends on the language of the governing ordinance . . .." *Nergaard v. Town of Westport Island*, 2009 ME 56, ¶ 12, 973 A.2d 735. Biddeford's governing ordinance provides that "An administrative . . . appeal may be taken to the Board of Appeals *by an aggrieved party*. . .." Biddeford, Me., Shoreland Zoning Ordinance, Art. XIV § 16(G)(4)(a)(i) (Amended 2-2-2010 by Ord. No. 2009.98) (last visited Sept. 29, 2025). The governing ordinance defines an Aggrieved Party" as "*An owner of land* whose *property* is *directly or indirectly affected by the granting or denial of a permit* or variance under this ordinance; a person whose land *abuts* land for which a permit or variance has been granted; or any other person or group of persons who have suffered *particularized injury* as a result of the granting or denial of such permit or variance." Biddeford, Me., Shoreland Zoning Ordinance, § 17 (Ord. of 9-15-1998(4); Ord. No. 2002.103, 8-19-2003; Ord. No. 2008.79, 10-21-2008) (last visited Sept. 29, 2025).

Mr. Schafer's purported appeal facially lacks standing. Nowhere in Mr. Schafer's application for appeal or in his attached "Evidence Summary" does he allege (1) that he *owns land* that is directly or indirectly affected by the Board's decision; (2) that he *owns land that* abuts the land that is the subject of the Board's decision; or otherwise that he has (3) suffered a particularized injury as a result of the Board's decision. Mr. Schafer makes no allegations about his connection to the Board's decision except to say that he is a "Biddeford resident" bringing the appeal on his own behalf and on behalf of "additional aggrieved parties." Merely being a resident of Biddeford does not make Mr. Schafer an aggrieved party. Mr. Schafer does not allege and has not shown that he owns land that is affected by the Board's decision, has not alleged or shown that his land, if any, abuts and that is the subject of the Board's decision, and has not demonstrated any particularized injury as to him that has resulted from the Board's decision. Instead, Mr. Schafer's appeal launches straight into his discussion of the merits without alleging or establishing his standing (or the standing of the other unnamed parties) as an aggrieved party or aggrieved parties.

Finally, to have standing, Mr. Schafer must have been a party to the administrative proceeding. *Lewis v. Town of Rockport, 2005 ME 44.* Mr. Schafer presented no evidence to the Planning Board as a party in the process. He spoke in opposition, and ironically out of frustration in realizing that his role in reducing the Harbormaster's authority to that of being a mere facilitator, quickly cut off his remarks. This appeal must be denied.

THE PLANNING BOARD DECISION IS SUPPORTED BY THE RECORD

The decision by the Planning Board is supported by substantial evidence in the record. An appellate body, such as this Board of Appeals, is not free to make findings independently and may not substitute its judgment for that of the Planning Board. This Board of Appeals review is limited to determining from the record, the Planning Board final decision and findings are supported by evidence in the record. *Driscoll v. Gheewalla, 441 A.2d 1023 (Me 1982).* The Planning Board followed both the Shoreland Zoning Ordinance as well as the Site Review Ordinance, in approving the application for the marine pier. None of the findings or conclusions were challenged at the Planning Board. Waivers were granted and no objections were voiced. This Board has no basis to overturn the Planning Board decision.

Sec. 74-35. Construction of wharf, pier or landing regulated.

[Ord. of 4-20-1993, § 26-29; Ord. No. 2007.11, 3-6-2007; amended 2-19-2013 by Ord. No. 2013.7; 9-19-2023 by Ord. No. 2023.102]

(a) No additions, alterations, new construction or/or changes to an existing wharf, pier or landing shall be made without prior permission of the Harbormaster.

(b) Permission for the construction of any new wharf or pier within the jurisdictional limits of the City shall not be granted without approval of the Harbormaster, along with federal, state and local governing authorities.

(c) To obtain permission for any new wharf or pier, the applicant must provide the following information:

(1) A formal boundary survey that has been documented at the Registry of Deeds.

(2) A copy of the boundary survey showing the littoral zone, established by extending property lines seaward.

(3) A location map from a portion of a USGS topographic map or coastal chart.

(4) Distance to navigable channels or any federal navigation project.

(5) Mean high- and low-water boundary.

(6) A plan view on the drawing(s) that shows the location and dimensions of the applicant's structure(s) in relation to the applicant's property lines.

(7) A typical cross section/side view of the applicant's structures on the drawing(s).

(8) Evidence that owners of abutting properties have been notified of the applicant's intended project.

(9) Evidence that the 1) Maine Historic Preservation Commission, 2) Aroostook Band of Micmac, 3) Passamaquoddy Tribe of Indians: Pleasant Point; Indian Township, 4) Houlton Band of Maliseet Indians, and 5) Penobscot Indian Nation have been notified of the applicant's intended project.

(10) Completed applications to the Army Corps of Engineers, Department of Environmental Protection and Biddeford Code Enforcement. A regulatory permit from the Saco River Corridor Commission may also be required in some instances.

(d) The process to obtain permission for any new wharf or pier shall be facilitated by the Harbormaster. Initially, the Harbormaster shall be available to guide the applicant through the application process and finally, to sign off that all regulatory approvals have been obtained for construction.

City of Biddeford, Maine

Policy Committee Meeting

August 7, 2023

PARTICIPANTS: Norman Belanger

Renee O'Neil

Liam LaFountain

Julian Schlaver

Brian Phinney

John Schafer

Transcribed By: Brianna Jackson, Court Reporter
The Reporting Group
P.O. Box 404
Springvale, ME 04083
(207) 281-4230
thereportinggroupmaine@gmail.com

(PLEASE NOTE: The following transcript was prepared from the Zoom recording provided to the best of my skill and ability based on the quality of the recording provided. I was not present at the proceeding and have transcribed the proceeding after the fact.)

MR. BELANGER: Committee Meeting of August 7th of 2023 to order. Role call. Everyone is here except for Jake Pierson who got caught in travel and, so, has been excused.

I ask everyone here to rise for the Pledge of Allegiance.

(Whereupon the Pledge of Allegiance was recited.)

MR. BELANGER: Item 3, Adjustments to the Agenda. There are none.

Item 4, Acceptance of the Minutes. They were not included in our package, so I assume we will delay the acceptance of those minutes until next month.

And, so, that brings us to Item 5, Discussion/Review. Amendment/Biddeford Code of Ordinances; Chapter 74 -- Waterways; Article II -- Harbor; Section 74-35 Construction of wharf, pier or landing regulated.

Does someone want to tee this up, and then --

MR. PHINNEY: Sure. I'll do that.

The harbormaster in conjunction with the Shellfish Commission and the Harbor Commission sat down and reviewed the ordinance. And there's a section on piers, wharfs -- piers and wharfs that was found to be lacking, so they sat down as a group and came up with additional language. The language intended to make it clear and provide some guidance to any applicants that come forth with a pier or wharf in terms of what is needed and how they should go about getting approval for that.

There's a draft of the ordinance that was included in the packet. The black text is the only text that was part of the original ordinance section. You can see there's quite a bit of detail that's missing there. Any of the shaded, underlined text is the information that's new that's been added that, basically, again, outlines what an applicant would need to provide to the harbormaster in order to start that process and have a complete packet for review and, ultimately, approval.

MR. BELANGER: All right. A motion to amend as stated?

UNIDENTIFIED SPEAKER: So moved.

MR. BELANGER: Second?

MS. O'NEIL: I'll second it.

MR. BELANGER: Moved and seconded.

Anyone from the public want to talk about this? Seeing none, back to the Committee. Any questions, comments?

MS. O'NEIL: I just want to know if there were any anticipated hardships associated with this recommendation that anyone was able to come up with?

MR. PHINNEY: We don't believe so. Because the original ordinance was so lacking in what the criteria was, they actually felt that by providing this -- the same amount of information that's defined here is --

MS. O'NEIL: Right.

MR. PHINNEY: -- what is needed. So they didn't anticipate there'd be any change there. It just makes it clear going into it what an applicant would be -- would need so they wouldn't come, meet with the harbormaster, get a list of items, and then have to go back and do the work. They could --

MS. O'NEIL: Which would be a hardship.

MR. PHINNEY: Right.

MS. O'NEIL: Right?

MR. PHINNEY: They could actually prepare ahead of time, look at what's required, do a cost benefit analysis, et cetera, if they wanted to even move

forward now that they know what's required.

MS. O'NEIL: Okay.

MR. PHINNEY: Yep.

MR. BELANGER: Any other -- yes --

MR. SCHLAVER: I was --

MR. BELANGER: -- Julian?

MR. SCHLAVER: I was, kind of, curious about the last paragraph where it says, The process to obtain permission of any new wharf or pier begins and ends with the harbormaster. Initially, it is the harbormaster's responsibility to guide the applicant through the application process and, finally, to review all completed documentation and assure all regulating authority approvals have been obtained.

Why is that so descriptive about the harbormaster's responsibilities?

MR. SCHAFER: Can I address that?

MR. SCHLAVER: Yeah, yeah.

MR. BELANGER: Sure, if you could go up to the mic, the --

MR. SCHAFER: Sure.

MR. BELANGER: -- the world can hear you.

MR. SCHAFER: My name is John Schafer. I'm in Ward 1. I was on the Harbor Commission in 2013 for a few years and have since retired and returned, and I'm

now Chair of the Harbor Commission.

The role of the harbormaster in this is more the role of a facilitator. I mean, we have 13 miles of coastline that we all enjoy. And whenever anyone does a seawall, a pier, a wharf, a dock or anything, it requires federal, state, and local approval. And all we've put together here is nothing more than a blueprint on how you get that approval from those regulatory agencies.

You know, the Army Corps of Engineers are the federal guys. The DEP is the state folks. And our Code Office is the local authority. And the harbormaster, all he's doing is making sure that whenever a dock, a pier, a wharf, a seawall go in along any of our 13 miles of coastline that those approvals have been achieved. And that's -- that's all this defines.

MR. SCHLAVER: Okay.

MR. SCHAFER: Can I answer any other questions? I wrote this, by the way, so I'd be happy to answer any questions that you have. I tried to keep it very, very simple; but it's nothing but a blueprint.

MR. BELANGER: Any other questions?

Yes, Liam.

MR. LAFOUNTAIN: Thank you. And thanks to the rest of the Commission as well for their work on this.

My only question is in regards to how many applications you have been seeing in the last few years.

MR. SCHAFER: I don't know that. As a matter of fact, I know for a fact that a lot of the applications -- people have gone and -- you know, in replacing a dock or something like that, they've gone to, like, a planning board. I don't know what authority the planning board has on the replacement of this because there is -- again, you have -- you have federal, state, and local approval. This is nothing but a -- but a blueprint for this.

I don't know how many applications -- I had -- when I retired from Hussey Seating, I started a business called Shape Fabrication, and I built docks and piers. And that's when I learned about the actual regulatory agencies that you needed to get permission from. And this is nothing but just outlining the blueprint of what we have. That's all this is. So I have no idea how many applications have been filed. I don't know.

MR. LAFOUNTAIN: Thank you.

MR. SCHAFER: Okay, Liam.

MR. BELANGER: Any other questions?

Okay. Then I'm going to pepper you with them. So I have a series of questions.

So, first, a formal boundary survey that has

been documented at the Registry of Deeds. What is intended by that? I mean, boundary surveys are not -- you know, there are plan books and stuff in the Registry of Deeds -- what exactly is expected that's going to be recorded in the Registry?

MR. SCHAFER: Very -- it's very clear. What happens is you have to make absolutely sure that the dock that you're going to be installing or pier or seawall is on the property that you own. And all that is is verification that it's there. And it gets into the littoral lines and so on.

And you also have to make sure -- there are certain setbacks that are required by the Army. Requiring, like, a 25-foot setback from the littoral line so that, if you have a property here and a property here, you're not hugging that boundary, that you have that setback, and you project those littoral lines out under that water so that at no time are you interfering with anyone else's use or right of way of that same body of water.

MR. BELANGER: Okay. Well, I understand the formal -- the requirements of the formal boundary survey. What I'm questioning is it has to be documented at the Registry. Normally, surveys don't get necessarily recorded in the Registry of Deeds. Is this

going to be -- are you requiring that a survey get done and that they record it with the York County Registry of Deeds; is that the plan?

MR. SCHAFER: Actually, that is the plan. And, as a matter of fact, I think right now, that has come to pass even in Roby's office to make sure that that's in place. I know of an instance of a person that put a dock in place and the boundaries were not clearly defined; and, as a result, it got into the possibility of a conflict between the two property owners.

So, typically, now -- I mean, when I was building docks and that, I would require a formal survey to make sure I absolutely knew where the property boundaries were.

MR. BELANGER: Okay. And I fully understand the formal boundary survey. I mean, that is a requirement. Who is actually the -- what normally happens with a survey, however, is I have a survey done on my property --

MR. SCHAFER: Yep.

MR. BELANGER: -- and I have it -- and I have it available --

MR. SCHAFER: Yep.

MR. BELANGER: -- and I -- if I'm doing anything in front of the planning board or whatever, I

provide them with the survey.

MR. SCHAFER: Yep.

MR. BELANGER: That survey doesn't necessarily get recorded with the York County Registry of Deeds. It just stays in, you know, my possession. I -- you know, there is a process to recording these things.

MR. SCHAFER: Sure.

MR. BELANGER: It's a little more of a hassle --

MR. SCHAFER: No, and what happens is, Norman, if you have a -- if your boundary has been properly surveyed and in the Registry of Deeds --

MR. BELANGER: So you're actually going to require people to record their surveys --

MR. SCHAFER: Absolutely.

MR. BELANGER: -- in the Registry of Deeds?

MR. SCHAFER: Yes. And the Army Corps actually requires that.

MR. BELANGER: Okay.

MR. SCHAFER: The Army Corps requires that.

MR. BELANGER: All right. And then we have -- and who is going to -- it seems to me from the sentence that Julian read, it begins and ends with -- does the harbormaster actually issue a permission?

MR. SCHAFER: No.

MR. BELANGER: Is there a permit that's issued --

MR. SCHAFER: Absolutely --

MR. BELANGER: -- at this point?

MR. SCHAFER: -- not, no.

MR. BELANGER: So what happens?

MR. SCHAFER: All the harbormaster is, he makes sure that there is an application that has been approved by the Army, an application that has been approved by the DEP, and an application that has been approved by Codes.

MR. BELANGER: Okay. So the final decision-making process is with Codes at the local area? So the one who gives permission is Roby or someone at the Code Enforcement Office?

MR. SCHAFER: Roby has to give permission, the DEP has to give permission, and the Army has to give permission.

MR. BELANGER: Okay. So --

MR. SCHAFER: All the harbormaster does -- his authority is the authority of knowledge. Knowing what -- knowing our 13 miles of shoreline, and knowing that all of these regulatory agencies have been giving their approval. That's all it is.

MR. BELANGER: So the harbormaster is not

himself or herself giving the approval?

MR. SCHAFER: No.

MR. BELANGER: They are just --

MR. SCHAFER: No. All he's doing is confirming that these approvals have been obtained.

MR. BELANGER: All right. All right. And the location map, using a USGS topographical map or coastal chart --

MR. SCHAFER: Right.

MR. BELANGER: -- that is -- are you requiring that on that location map it shows an as built of where the wharf is going?

MR. SCHAFER: Absolutely, because the Army requires that to make sure that it's not interfering with any type of a federal waterway or anchorage.

MR. BELANGER: And that gets me to the next question. Distance to a navigable channel or any federal navigation project.

MR. SCHAFER: Yes.

MR. BELANGER: What is a federal navigation project?

MR. SCHAFER: Well --

MR. BELANGER: That's not a term that --

MR. SCHAFER: -- it would be like on the Saco River, for instance. We have to make sure that there is

an area in the Saco River that you cannot infringe upon at all to interfere at all with any water traffic.

MR. BELANGER: So when we're saying you're going to give us the distance between -- to the navigable channel --

MR. SCHAFER: Yes.

MR. BELANGER: -- or the distance to a federal navigation project, what -- can you give me -- I mean, I guess, exactly what is that?

MR. SCHAFER: Actually, that word -- I took those words right out of the Army Corps application.

MR. BELANGER: Okay. So they --

MR. SCHAFER: You know, and again, I tried not to -- I tried not to -- you know, if you take a look at the DEP regs and the documentation that they require you to go through, it's a booklet that thick. The Army Corps is a booklet that thick. I didn't want to repeat all of that, but I wanted to give everybody a flavor of what some of the minimum requirements are.

Even, like, for instance, to making sure that you get permission from the tribes of Maine, from the Historical -- the Historical Society, to make sure that you're not interfering in any area that could possibly create a problem for anyone.

MR. BELANGER: And I -- yeah, that was going

to be another question I had. I'm assuming those five items must be Maine statutory? I mean, the Maine Historic Preservation, the Aroostook Banner, the Mi'kmaq, the Passamaquoddy --

MR. SCHAFER: Yes.

MR. BELANGER: -- those --

MR. SCHAFER: Yes.

MR. BELANGER: And the Houlton Banner, the Maliseet, those are -- is that state law requirement?

MR. SCHAFER: That's all out of the Army Corps, yes.

MR. BELANGER: Okay.

MR. SCHAFER: Absolutely, yes.

MR. BELANGER: And, so, even if those nations never had any land here in this part of the --

MR. SCHAFER: You still -- and by the way, when you get their permission in their formal letters, they have the most beautiful letterheads. That's all I could tell you. It's fantastic.

MR. BELANGER: And the notification for abutters, is there any kind of time? How far in advance do they have to be notified? Are there any kind of thought processes there?

MR. SCHAFER: I don't recall specifically what the timeline was; but that is a requirement that local

Code -- you also have to post something in the newspaper indicating -- and that's a DEP requirement -- that you're doing this. It has to be posted so that other folks can do it. And I think you have to also alert all your abutters to that effect that you're doing this.

MR. BELANGER: All right. So my -- yeah. I guess my only concern at all -- I mean, thank you for answering all those questions. You know, just -- it's who I am, unfortunately. And my fellow councilors have gotten used to it but other people find it tedious, I'm sure. My fellow councilors probably find it tedious as well.

But -- so the only thing I would think -- I find the sentence that says, The process to obtain permission of any new wharf or pier begins and ends with the harbormaster, is confusing.

MR. SCHAFER: Is what? I'm sorry.

MR. BELANGER: Is confusing I think.

So what you're really saying is the harbormaster is empowered with overseeing the process to obtain the -- I read that sentence and it makes it sound to me like the harbormaster is the one who issues the final permit.

MR. SCHAFER: And that is absolutely not the case. The harbormaster is nothing but a facilitator.

MR. BELANGER: Thank you.

MR. SCHAFER: So they facilitate any applicant through the process. And this is why the best thing you can do if you're going to put a dock in -- talk to our harbormasters. We have two. And at that point in time, they'll say, look, this is what you have to do. And go see Jay Clement of the Army. Go see so-and-so at the DEP. Make sure you talk to Roby Fecteau. You need permission from all three of those regulatory agencies, absolutely.

MR. BELANGER: Would you have any problem if we changed the words "begins and ends with" with shall be facilitated by?

MR. SCHAFER: I absolutely have no problem at all with that.

MR. BELANGER: Okay.

MR. SCHLAVER: Norman, I mean, I think that, also, there's some exposure to the harbormaster because of the word "responsibility" there.

MR. BELANGER: Yep.

MR. SCHLAVER: That if for someone -- if someone was unable to get an approval, it seems almost from that sentence that they could blame the harbormaster for not doing a good job guiding them through the process.

MR. SCHAFER: Yep.

MR. SCHLAVER: So I would like to try and protect the harbormaster by coming up with language that's more declarative that just simply says the harbormaster is available to answer questions or to guide you through the process.

MR. BELANGER: Right. Well, if we change "begins and ends with" with the words "shall be facilitated by," and if we say in the next sentence, it's initially the harbormaster -- the harbormaster shall be available to guide rather it's the harbormaster's responsibility seems to me would be more comfortable. So if we said initially, you know, the harbormaster shall be available to guide instead of it's his -- his or her responsibility.

MR. SCHLAVER: And is it the case that before the dock can be installed, the harbormaster has to sign off on it or give approval?

MR. SCHAFER: The harbormaster has to assure that all three --

MR. BELANGER: Right.

MR. SCHAFER: -- of those agencies have, in fact, given approval, yes.

MR. SCHLAVER: So maybe we want to say something that states, like, no dock or other structure

can be installed without the --

MR. BELANGER: So who --

MR. SCHLAVER: -- harbormaster verifying approvals.

MR. BELANGER: So does the harbormaster then sign something? I mean, what has -- so I want to build a pier. I go talk to the harbormaster, and he says --

MR. SCHAFER: Yep.

MR. BELANGER: -- look, you need the Army Corps, you need the state, you need Roby.

MR. SCHAFER: Yep.

MR. BELANGER: Here, let me show you how to do this. I go through it and go through that whole process and --

MR. SCHAFER: That's correct.

MR. BELANGER: -- get those approvals.

MR. SCHAFER: Yes.

MR. BELANGER: Does the harbormaster then do anything after that? He just was there by my side to help me, but --

MR. SCHAFER: He's there by your side to help you. And he also works very closely to Roby Fecteau.

MR. BELANGER: But he doesn't actually sign anything that says, okay, now it's approved?

MR. SCHAFER: No, not at this time.

MR. BELANGER: Okay.

MR. SCHAFER: But I think that would be a very good suggestion, Norman, that the harbormaster does sign something that said, I recognize that this approval has been -- has been received at the federal, state, and local for this dock. As the harbormaster, yes, I can -- I recognize that these approvals have been granted. I think that's a great suggestion, Norman.

MR. BELANGER: All right.

MR. SCHLAVER: It seems almost as though one could put notifying the harbor master at the top of that list and getting a final approval or a letter of certification or something at the bottom of that list, and that would just make it a clear process, you know?

MR. SCHAFER: Julian, I was trying to do that --

MR. SCHLAVER: Yeah.

MR. SCHAFER: -- in that wording.

MR. SCHLAVER: Yeah.

MR. SCHAFER: And that's why I said it begins with the harbormaster --

MR. SCHLAVER: Yeah, yeah.

MR. SCHAFER: -- and it ends with the harbormaster.

MS. O'NEIL: Yeah.

MR. SCHAFER: The harbormaster can help you navigate it because it's not easy. I mean, the first time I went to get permits, it took me, like, eight months. This -- to get my first dock in. And this really streamlines it. You can do all these things simultaneously, it's just you need to know the path.

MR. SCHLAVER: Right.

MR. SCHAFER: And that's all this is, is nothing but a blueprint. And I'll amend that to whatever this Policy Committee recommends, you know, again, maintaining --

MR. SCHLAVER: Yep.

MR. SCHAFER: -- these are the three regulatory --

MR. SCHLAVER: Yeah.

MR. SCHAFER: -- regulatory authorities that grant approval for the dock.

MR. SCHLAVER: Is it -- is it possible that someone who is, like, a professional dock installer could do all of this work without talking to the harbormaster?

MR. SCHAFER: That's interesting that you ask that because I know some people who say they are professional dock installers and whose applications have been denied.

MR. SCHLAVER: Right.

MR. SCHAFER: Anybody can say that they're a professional dock installer.

MR. SCHLAVER: And Codes --

MR. BELANGER: Insert your "What's up, Doc" joke here.

MR. SCHLAVER: Yeah. But it's not Code's responsibility to make sure that these other things have been --

MR. SCHAFER: Nope.

MR. SCHLAVER: -- have been satisfied?

MR. SCHAFER: No, it's not.

MR. SCHLAVER: So I feel as though the correct thing to -- for a policy -- from a policy standpoint is endowing the harbormaster with the responsibility of ensuring that everything has been done according to this -- to the regulatory authorities.

MR. SCHAFER: I -- that's what I was --

MS. O'NEIL: Yes.

MR. SCHAFER: That's what I was attempting to write --

MR. SCHLAVER: Yeah.

MR. SCHAFER: -- without -- you know, without saying that, you know -- and because it's these -- all Paul does, all that Randy will do, is to make sure that

this blueprint is followed.

MR. SCHLAVER: Right.

MS. O'NEIL: I think it -- I think I would recommend to keep the wording as it stands. I do agree that it's a little -- at first, it sounds like there has to be, like, a decision-making process when I first read that, but once I read the complete paragraph, it's telling you what it -- what that person is doing, what those responsibilities are.

And I do like the beginning and the end because it really is -- I see why you use that logic, because it really comes about being the first contact person and then wrapping it up at the end to make sure --

MR. SCHAFER: Exactly.

MS. O'NEIL: -- all those pieces were ticked and tied.

MR. SCHAFER: That's what it is. And all this is is that it gives the harbormaster -- all the authority that the harbormaster has is the authority of knowledge, making sure that these regulatory requirements have been met.

MS. O'NEIL: And you're not saying it's -- you're making -- the harbormaster is making the decision.

MR. SCHAFER: No.

MS. O'NEIL: It is just saying that, to obtain --

MR. SCHAFER: That's -- that's exactly right.

MS. O'NEIL: Yeah.

MR. SCHAFER: That's exactly right.

And from that perspective, also, Julian, I think to your point, not having the -- exposing the harbormaster from a liability perspective or anything like that, not at all. The liability belongs at those regulatory agencies, and this is where you have to get your permission.

MR. SCHLAVER: I just wondered outside of, like, if -- if for example, there was a certain amount of time that would be required for that notification process and someone fails -- oh, and someone --

MR. SCHAFER: Yeah.

MR. SCHLAVER: If there was a notification process that has a timeline, let's say --

MR. SCHAFER: Yeah.

MR. SCHLAVER: -- someone fails to do it within the prescribed timeline, I wouldn't want you to be blamed for not making them -- checking in, let's say, to make sure that --

MR. SCHAFER: I got you.

MR. SCHLAVER: Do you know what I mean?

MR. SCHAFER: Yeah.

MR. SCHLAVER: In that kind of situation because then, if you're both the person that is basically blessing the project and the one that's guiding them through the process, it seems as though you potentially could get into a situation where you might not want to be --

MR. SCHAFER: Exactly.

MR. SCHLAVER: -- you know --

MR. SCHAFER: Exactly. And the harbormaster is not the guy that's going to be blessing this thing. He's just making sure that the path is followed. And he's in the best position to do that.

MR. SCHLAVER: So if in the scenario where someone, let's say, failed to notify the tribes, right?

MR. SCHAFER: Yeah.

MR. SCHLAVER: And you became aware of that --

MR. SCHAFER: I would --

MR. SCHLAVER: -- how would you stop the dock from proceeding if they had building permits?

MR. SCHAFER: The harbormaster wouldn't have to worry about that --

MR. SCHLAVER: Okay.

MR. SCHAFER: -- because the Army Corps of

Engineers would stop it --

MR. SCHLAVER: Right.

MR. SCHAFER: -- because that's very clear in the Army Corps regs that you have to notify the five tribes and the Historical Commission and your abutters.

MR. SCHLAVER: And, so, the Army Corps --

MR. SCHAFER: Public notification.

MR. SCHLAVER: So that's the last step then, basically, is the Army Corps approval?

MR. SCHAFER: No. There's no -- you know, to me, there is no -- you can do all of these simultaneously. You really can. You know, the Army has responsibility with regard to the waterways particularly. The DEP has responsibility with regard to the environment, when you're crossing a salt marsh or whatever. And then Codes primarily are focusing on the structure, making sure that the thing is structurally sound. So you can do all three simultaneously; but, unfortunately, the process of the federal, state, and local is a little disconnected.

MR. SCHLAVER: Yeah.

MR. SCHAFER: And but you need all three of those regulatory agencies.

And one can bump the thing out. If the tribes were not notified properly, you wouldn't get an Army

Corps permit. But similarly, if you did get an Army Corps permit, that -- people think, well, I was approved by the Army Corps. Okay. That's good because that's one of the steps that you have to take, but you also need DEP and you also need Codes. You know, there is no one agency that overrides the other --

MR. SCHLAVER: Right.

MR. SCHAFER: -- at all.

MR. BELANGER: So would it be a fair sentence if we changed -- if I changed that first sentence to say, The process to obtain permission of any new wharf or pier begins with notification to the harbormaster and ends with the harbormaster certifying that the federal, state, and local code -- local approvals have been received.

Would that --

MR. SCHAFER: That would be fine, Norman. Sure. That would be fine.

MS. O'NEIL: Yep. That's what I (inaudible).

MR. BELANGER: All right.

UNIDENTIFIED SPEAKER: Seconded.

MR. SCHAFER: Okay. Okay. Now -- now, here's the question that I have.

MR. BELANGER: Yes.

MR. SCHAFER: Here's the question. I'll amend

that draft to that because it makes sense and I think that's a good suggestion. But now what do I do? Do I come back to the policy --

MR. BELANGER: No. So what's going to happen -- let me tell you the process.

MR. SCHAFER: Okay. Please.

MR. BELANGER: We'll make the amendment here -- from here.

MR. SCHAFER: Okay.

MR. BELANGER: We basically -- the motion on the floor --

MR. SCHAFER: Yep.

MR. BELANGER: -- is that your changes be adopted and be recommended to the council --

MR. SCHAFER: Okay.

MR. BELANGER: -- for an ordinance change. We'll make an amendment here, you know, at this -- well, one of us will make a motion.

MR. SCHAFER: Okay.

MR. BELANGER: We'll make a second. We'll make the will -- that we amend this to read in that sort of fashion. And then we'll vote as -- for the amended thing to go up to council for approval.

MR. SCHAFER: Okay. Perfect.

MR. BELANGER: So you will not need --

MR. SCHAFER: Perfect. That's great. Thank you.

MR. BELANGER: -- to do anything further, so --

MR. SCHAFER: By the way, Norman, you've got to understand I'm an engineer. I'm not a creative writer, so --

MR. BELANGER: That's okay. I'm a lawyer.

UNIDENTIFIED MALE: Good. You did good.

MR. BELANGER: You're doing great.

So I -- so what I -- you know, we'll take a motion to basically make the amendment. So the first sentence will read, The process to obtain permission of any new wharf or pier begins with notification of the harbor -- to the harbormaster and ends with the harbormaster certifying that federal, state, and local approvals have been received.

All right. So that's a motion from somebody here -- else on the floor.

UNIDENTIFIED MALE: Seconded.

MR. BELANGER: All right. Moved and seconded that we make that amendment.

Any further discussion or any more from the public?

MR. SCHAFER: Public --

MR. BELANGER: Seeing none, no.

Anyone -- any further discussion here? Vote on the amendment?

(Panel votes.)

MR. BELANGER: Any further discussion or any other changes?

I think it's also probably helpful to change the next sentence to not make it the harbormaster's responsibility to guide, but to say -- you know, the next sentence say initially -- no, not even initially. I'd say the harbormaster shall be available to guide the applicant through the process.

So I would take out, Initially it is the harbormaster's responsibility, and change that with the harbormaster shall be available. And if someone will make that motion to amend.

MR. SCHLAVER: I'll make the motion that the second sentence reads that the harbormaster shall be available to guide them through the process.

MR. BELANGER: Okay. That is second -- moved and seconded. Any further discussion on this amendment?

MS. O'NEIL: Is there any problem with the shall? Like, again, if someone -- what if you have multiple applications and you're not able to be available or someone's not able to be available?

MR. BELANGER: Well, we're not saying any particular timing.

MS. O'NEIL: Okay. Good.

MR. BELANGER: We're not saying that they'll be available on, you know, so many days' notice. So I think we're all set.

MS. O'NEIL: All right. Good.

MR. BELANGER: Any further discussion on the amendment?

All in favor?

(Panel votes.)

MR. BELANGER: That's unanimous.

Any other discussions on the thing as amended? Seeing --

MR. PHINNEY: Could you read the first sentence for me? I just want to make sure I'm --

MR. BELANGER: Yeah. The first sentence will say, The process to obtain permission of any new wharf or pier begins with notification to the harbormaster and ends with the harbormaster certifying that federal, state, and local approvals have been received.

You all set?

MR. PHINNEY: I just heard (inaudible) federal, state, and tribal?

MR. SCHAFER: No. Federal, state, and local.

MR. BELANGER: Local because the tribal, I think, is part of the --

MR. SCHAFER: Local being local Codes.

MR. BELANGER: But the tribal piece gets done by other parts of the state.

MR. SCHAFER: The tribal piece gets done by the --

MS. O'NEIL: Army Corps.

MR. SCHAFER: -- by the Army Corps.

MR. BELANGER: Okay. So anything further?

All in favor of the thing as amended?

(Panel votes.)

MR. BELANGER: And that is unanimous.

MR. SCHAFER: Thank you, Committee.

MR. BELANGER: Thank you.

So anything -- anything else? There's nothing on the agenda. Anything else to come before the Committee? If not, I'll entertain a motion to adjourn.

Yeah, oh, something, yeah?

MR. LAFOUNTAIN: Just two notes from me.

I have heard from a couple constituents recently about parking on Orchard Street. That's right off of Elm near Hannaford. Some are interested or concerned about safety issues for parking on both sides of the street; which for a portion of Orchard Street

there is parking on both sides, for a portion there isn't. But potentially reviewing that as we've done with other streets to see if there's a safety issue.

I've also worked with other constituents on that street who really want the parking to remain as is. So it will be a delicate balance, but if there is a safety concern, I think it's something we should look into.

The other part is Clifford Park. I would still like us to look at that as a conservation -- have that conversation at the policy level or, if not -- if we should just put that up to the city council; but I knee we left it with -- in flux --

MR. BELANGER: Yeah, no, and --

MR. LAFOUNTAIN: -- the last time we discussed.

MR. BELANGER: -- to give you an update. The open items to me is -- there's that. There's also the language with regard to, you know, what -- the conservation language. There's also the cannabis, you know, use. All of those things, staff wasn't prepared to present to us at this point in time; but they're all -- I've been pushing to try to get these things in front of the Policy. So those things are in the works.

We'll also request that the chief and other

people look into --

MR. LAFOUNTAIN: Orchard Street.

MR. BELANGER: -- the Orchard Street parking issue --

MR. LAFOUNTAIN: Thank you.

MR. BELANGER: -- as well.

Yes?

MR. PHINNEY: Just an update on the conservation easements for Clifford Park. We do have the necessary paperwork now, so I would anticipate that that will be ready for your next meeting.

MR. BELANGER: Okay.

MR. PHINNEY: So no issue there. Yeah.

MR. BELANGER: Okay. Anything else?

If not, I'll entertain a motion to adjourn.

MR. SCHLAVER: I'll make that motion.

MS. O'NEIL: Seconded.

MR. BELANGER: Moved and seconded.

All in favor?

(Panel votes.)

MR. BELANGER: It's a wrap. Thanks.

(Whereupon, the Zoom recording ended.)

* * * * * *

CERTIFICATE

I, Brianna L. Jackson, a Notary Public in and for the State of Maine, hereby certify that this Zoom recording was stenographically reported by me and later reduced to print through Computer-Aided Transcription, and the foregoing is a full and true record of the Zoom recording to the best of my skill and ability from the recording provided.

I further certify that I am a disinterested person in the event or outcome in the above-mentioned cause of action.

IN WITNESS WHEREOF, I subscribe my hand and affix my seal this 16th day of September, 2025. Dated at Bradley, Maine.

Brianna Jackson

Brianna L. Jackson
Notary Public/Court Reporter

My Commission Expires: December 23, 2031

0

04083 [1] - 1:22

1

1 [1] - 5:24
13 [3] - 6:3, 6:14, 11:22
16th [1] - 34:14

2

2013 [1] - 5:24
2023 [2] - 1:6, 2:7
2025 [1] - 34:14
2031 [1] - 34:23
207 [1] - 1:23
23 [1] - 34:23
25-foot [1] - 8:14
281-4230 [1] - 1:23

3

3 [1] - 2:14

4

4 [1] - 2:16
404 [1] - 1:22

5

5 [1] - 2:19

7

7 [1] - 1:6
74 [1] - 2:21
74-35 [1] - 2:22
7th [1] - 2:6

A

ability [2] - 2:3, 34:8
able [3] - 4:7, 29:24, 29:25
above-mentioned [1] - 34:11
absolutely [8] - 8:7, 9:13, 10:15, 12:13, 14:13, 15:24, 16:10, 16:14
Absolutely [1] - 11:3
abutters [3] - 14:21, 15:5, 25:5
Acceptance [1] - 2:16
acceptance [1] - 2:18
according [1] - 21:16
achieved [1] - 6:15
action [1] - 34:12
actual [1] - 7:15
added [1] - 3:16
additional [1] - 3:6
address [1] - 5:17
adjourn [2] - 31:18, 33:15
Adjustments [1] - 2:14
adopted [1] - 27:14
advance [1] - 14:21
affix [1] - 34:13
agencies [7] - 6:9, 7:16, 11:23, 16:9, 17:22, 23:11, 25:23
agency [1] - 26:6
Agenda [1] - 2:15
agenda [1] - 31:17
agree [1] - 22:4
ahead [1] - 4:24
Aided [1] - 34:6
alert [1] - 15:4
Allegiance [2] - 2:11, 2:12
almost [2] - 16:22, 19:10
amend [5] - 3:21, 20:9, 26:25, 27:21, 29:16
amended [3] - 27:22, 30:13, 31:11
amendment [7] - 27:7, 27:17, 28:12, 28:22, 29:3, 29:21, 30:9
Amendment/ Biddeford [1] - 2:20
amount [2] - 4:11, 23:14
analysis [1] - 4:25
anchorage [1] - 12:15
answer [3] - 6:18, 6:20, 17:5
answering [1] - 15:8
anticipate [2] - 4:15, 33:10
anticipated [1] - 4:6
applicant [5] - 3:17, 4:16, 5:11, 16:2, 29:12
applicants [1] - 3:7
application [5] - 5:12, 11:8, 11:9, 11:10, 13:11
applications [6] - 7:2, 7:5, 7:12, 7:19, 20:24, 29:24
approval [15] - 3:9, 3:20, 6:6, 6:8, 7:10, 11:24, 12:1, 16:22, 17:18, 17:23, 19:4, 19:12, 20:17, 25:9, 27:23
approvals [9] - 5:14, 6:15, 12:5, 18:4, 18:16, 19:7, 26:14, 28:17, 30:21
approved [5] - 11:9, 11:10, 11:11, 18:24, 26:2
area [3] - 11:13, 13:1, 13:23
army [1] - 31:8
Army [21] - 6:10, 8:13, 10:17, 10:20, 11:9, 11:17, 12:13, 13:11, 13:16, 14:10, 16:7, 18:9, 24:25, 25:4, 25:6, 25:9, 25:12, 25:25, 26:1, 26:3, 31:9
Aroostook [1] - 14:3
Article [1] - 2:21
associated [1] - 4:6
assume [1] - 2:17
assuming [1] - 14:1
assure [2] - 5:13, 17:19
attempting [1] - 21:20
August [2] - 1:6, 2:6
authorities [2] - 20:16, 21:17
authority [7] - 5:14, 6:12, 7:7, 11:21, 22:20
available [10] - 9:22, 17:5, 17:11, 17:14, 29:11, 29:15, 29:19, 29:25, 30:5
aware [1] - 24:18

B

balance [1] - 32:6
Banner [2] - 14:3, 14:8
based [1] - 2:3
beautiful [1] - 14:18
became [1] - 24:18
beginning [1] - 22:10
begins [9] - 5:9, 10:23, 15:15, 16:12, 17:8, 19:20, 26:12, 28:14, 30:19
Belanger [1] - 1:14
BELANGER [95] - 2:6, 2:14, 3:21, 3:24, 4:1, 5:4, 5:6, 5:19, 5:22, 6:22, 7:22, 8:21, 9:15, 9:21, 9:24, 10:3, 10:8, 10:13, 10:16, 10:19, 10:21, 11:1, 11:4, 11:6, 11:12, 11:19, 11:25, 12:3, 12:6, 12:10, 12:16, 12:20, 12:23, 13:3, 13:7, 13:12, 13:25, 14:6, 14:8, 14:12, 14:14, 14:20, 15:6, 15:18, 16:1, 16:11, 16:16, 16:20, 17:7, 17:21, 18:2, 18:5, 18:9, 18:12, 18:16, 18:18, 18:23, 19:1, 19:9, 21:5, 26:9, 26:20, 26:24, 27:4, 27:7, 27:10, 27:13, 27:16, 27:20, 27:25, 28:3, 28:8, 28:10, 28:21, 29:1, 29:5, 29:20, 30:1, 30:4, 30:8, 30:12, 30:17, 31:1, 31:4, 31:10, 31:13, 31:15, 32:14, 32:17, 33:3, 33:6, 33:12, 33:14, 33:18, 33:21
belongs [1] - 23:10
benefit [1] - 4:25
best [4] - 2:2, 16:3, 24:14, 34:8
between [2] - 9:10, 13:4
Biddeford [1] - 1:4
bit [1] - 3:14
black [1] - 3:12
blame [1] - 16:23
blamed [1] - 23:23
blessing [2] - 24:5, 24:12
blueprint [6] - 6:7, 6:21, 7:11, 7:17, 20:9, 22:1
board [3] - 7:7, 7:8, 9:25
body [1] - 8:19
booklet [2] - 13:16, 13:17
books [1] - 8:3
bottom [1] - 19:13
boundaries [2] - 9:8, 9:14
boundary [6] - 7:25, 8:2, 8:16, 8:22, 9:16, 10:11
Box [1] - 1:22
Bradley [1] - 34:15
Brian [1] - 1:18
Brianna [3] - 1:21, 34:3, 34:20
brings [1] - 2:19
build [1] - 18:6
building [2] - 9:12, 24:21
built [2] - 7:14, 12:11
bump [1] - 25:24
business [1] - 7:13

C

cannabis [1] - 32:20
cannot [1] - 13:1
case [2] - 15:25, 17:16
caught [1] - 2:8
certain [2] - 8:13, 23:14
CERTIFICATE [1] - 34:1
certification [1] - 19:13
certify [2] - 34:4, 34:10
certifying [3] - 26:13, 28:16, 30:20
cetera [1] - 4:25
Chair [1] - 6:1
change [5] - 4:15, 17:7, 27:16, 29:7, 29:14
changed [3] - 16:12, 26:10
changes [2] - 27:13, 29:6
channel [2] - 12:17, 13:5
Chapter [1] - 2:21
chart [1] - 12:8
checking [1] - 23:23
chief [1] - 32:25
City [1] - 1:4
city [1] - 32:12
clear [5] - 3:7, 4:16, 8:6, 19:14, 25:3
clearly [1] - 9:8
Clement [1] - 16:7
Clifford [2] - 32:9, 33:9
closely [1] - 18:22
coastal [1] - 12:7
coastline [2] - 6:4, 6:15
code [1] - 26:14
Code [4] - 2:20, 6:11, 11:15, 15:1
Code's [1] - 21:7

Codes [6] - 11:11, 11:13, 21:4, 25:16, 26:5, 31:3
comfortable [1] - 17:13
coming [1] - 17:3
comments [1] - 4:4
Commission [7] - 3:2, 5:24, 6:1, 6:25, 25:5, 34:23
Committee [5] - 1:5, 4:3, 20:10, 31:14, 31:18
committee [1] - 2:6
complete [2] - 3:19, 22:7
completed [1] - 5:13
Computer [1] - 34:6
Computer-Aided [1] - 34:6
concern [2] - 15:7, 32:7
concerned [1] - 31:24
confirming [1] - 12:5
conflict [1] - 9:10
confusing [2] - 15:16, 15:18
conjunction [1] - 3:1
conservation [3] - 32:10, 32:20, 33:9
constituents [2] - 31:21, 32:4
Construction [1] - 2:22
contact [1] - 22:12
conversation [1] - 32:11
Corps [16] - 6:10, 10:17, 10:20, 13:11, 13:17, 14:11, 18:10, 24:25, 25:4, 25:6, 25:9, 26:1, 26:2, 26:3, 31:8, 31:9
correct [2] - 18:15, 21:13
cost [1] - 4:24
council [3] - 27:14, 27:23, 32:12
councilors [2] - 15:9, 15:11
County [2] - 9:2, 10:4
couple [1] - 31:21
Court [1] - 1:21
create [1] - 13:24
creative [1] - 28:6
criteria [1] - 4:10
crossing [1] - 25:15
curious [1] - 5:7

D

Dated [1] - 34:14
days' [1] - 30:5
december [1] - 34:23
decision [3] - 11:13, 22:6, 22:25
decision-making [2] - 11:13, 22:6
declarative [1] - 17:4
Deeds [7] - 8:1, 8:4, 8:25, 9:3, 10:4, 10:12, 10:16
defined [2] - 4:11, 9:9
defines [1] - 6:16
delay [1] - 2:17
delicate [1] - 32:6
denied [1] - 20:25
DEP [8] - 6:11, 11:10, 11:17, 13:15, 15:2, 16:8, 25:14, 26:5
descriptive [1] - 5:15
detail [1] - 3:14
disconnected [1] - 25:20
discussed [1] - 32:16
discussion [5] - 28:23, 29:2, 29:5, 29:21, 30:8
Discussion/Review [1] - 2:20
discussions [1] - 30:13
disinterested [1] - 34:10
distance [3] - 12:17, 13:4, 13:7
Doc [1] - 21:5
dock [15] - 6:5, 6:13, 7:6, 8:8, 9:8, 16:4, 17:17, 17:25, 19:6, 20:4, 20:17, 20:19, 20:24, 21:3, 24:20
docks [2] - 7:14, 9:12
documentation [2] - 5:13, 13:15
documented [2] - 8:1, 8:23
done [6] - 9:1, 9:18, 21:16, 31:4, 31:6, 32:2
down [2] - 3:2, 3:5
draft [2] - 3:11, 27:1

E

easements [1] - 33:9
easy [1] - 20:2
effect [1] - 15:5
eight [1] - 20:3
Elm [1] - 31:23
empowered [1] - 15:20
end [2] - 22:10, 22:13
ended [1] - 33:22
endowing [1] - 21:15
ends [9] - 5:9, 10:23, 15:15, 16:12, 17:8, 19:23, 26:13, 28:15, 30:20
Enforcement [1] - 11:15
engineer [1] - 28:6
Engineers [2] - 6:10, 25:1
enjoy [1] - 6:4
ensuring [1] - 21:16
entertain [2] - 31:18, 33:15
environment [1] - 25:15
et [1] - 4:25
event [1] - 34:11
exactly [5] - 8:4, 13:9, 23:4, 23:6, 24:9
Exactly [2] - 22:15, 24:11
example [1] - 23:14
except [1] - 2:7
excused [1] - 2:9
expected [1] - 8:4
Expires [1] - 34:23
exposing [1] - 23:8
exposure [1] - 16:18

F

Fabrication [1] - 7:14
facilitate [1] - 16:2
facilitated [2] - 16:13, 17:9
facilitator [2] - 6:3, 15:25
fact [5] - 2:5, 7:4, 9:5, 17:23
failed [1] - 24:16
fails [2] - 23:16, 23:21
fair [1] - 26:9
fantastic [1] - 14:19
far [1] - 14:21
fashion [1] - 27:22
favor [3] - 30:10, 31:11, 33:19
Fecteau [2] - 16:8, 18:22
federal [14] - 6:6, 6:11, 7:9, 12:15, 12:18, 12:20, 13:7, 19:5, 25:19, 26:13, 28:16, 30:20, 30:24, 30:25
fellow [2] - 15:9, 15:11
felt [1] - 4:10
few [2] - 5:25, 7:2
filed [1] - 7:19
final [3] - 11:12, 15:23, 19:12
finally [1] - 5:12
fine [2] - 26:17, 26:18
first [10] - 7:25, 20:2, 20:4, 22:5, 22:6, 22:12, 26:10, 28:12, 30:15, 30:17
five [2] - 14:1, 25:4
flavor [1] - 13:18
floor [2] - 27:11, 28:19
flux [1] - 32:13
focusing [1] - 25:16
folks [2] - 6:11, 15:4
followed [2] - 22:1, 24:13
following [1] - 2:1
foregoing [1] - 34:7
formal [6] - 7:25, 8:22, 9:12, 9:16, 14:17
forth [1] - 3:8
forward [1] - 5:1
front [2] - 9:25, 32:24
full [1] - 34:7
fully [1] - 9:15

G

given [1] - 17:23
grant [1] - 20:17
granted [1] - 19:7
great [3] - 19:8, 28:1, 28:10
group [1] - 3:5
Group [1] - 1:21
guess [2] - 13:9, 15:7
guidance [1] - 3:7
guide [7] - 5:11, 17:6, 17:11, 17:14, 29:9, 29:11, 29:19
guiding [2] - 16:24, 24:6
guy [1] - 24:12
guys [1] - 6:11

H

hand [1] - 34:13
Hannaford [1] - 31:23
happy [1] - 6:19
harbor [2] - 19:11, 28:15
Harbor [4] - 2:22, 3:2, 5:24, 6:1
harbormaster [49] - 3:1, 3:18, 4:18, 5:10, 6:2, 6:12, 10:24, 11:7, 11:20, 11:25, 15:16, 15:20, 15:22, 15:25, 16:18, 16:24, 17:3, 17:5, 17:10, 17:14, 17:17, 17:19, 18:3, 18:5, 18:7, 18:18, 19:3, 19:6, 19:21, 19:24, 20:1, 20:21, 21:15, 22:19, 22:20, 22:24, 23:9, 24:11, 24:22, 26:12, 26:13, 28:15, 28:16, 29:11, 29:15, 29:18, 30:19, 30:20
harbormaster's [5] - 5:10, 5:16, 17:12, 29:8, 29:14
harbormasters [1] - 16:5
hardship [1] - 4:20
hardships [1] - 4:6
hassle [1] - 10:9
hear [1] - 5:22
heard [2] - 30:23, 31:21
help [3] - 18:20, 18:21, 20:1
helpful [1] - 29:7
hereby [1] - 34:4
herself [1] - 12:1
himself [1] - 12:1
Historic [1] - 14:3
Historical [3] - 13:22, 25:5
Houlton [1] - 14:8
hugging [1] - 8:16
Hussey [1] - 7:13

I

idea [1] - 7:18
II [1] - 2:21
IN [1] - 34:13

inaudible [1] - 30:23
inaudible) [1] - 26:19
included [2] - 2:17, 3:12
indicating [1] - 15:2
information [2] - 3:16, 4:11
infringe [1] - 13:1
insert [1] - 21:5
installed [2] - 17:17, 18:1
installer [2] - 20:19, 21:3
installers [1] - 20:24
installing [1] - 8:8
instance [3] - 9:7, 12:25, 13:20
instead [1] - 17:14
intended [2] - 3:6, 8:2
interested [1] - 31:23
interesting [1] - 20:22
interfere [1] - 13:2
interfering [3] - 8:18, 12:14, 13:23
issue [4] - 10:24, 32:3, 33:4, 33:13
issued [1] - 11:2
issues [2] - 15:22, 31:24
item [2] - 2:14, 2:16
item [1] - 2:19
items [3] - 4:18, 14:2, 32:18

J

Jackson [3] - 1:21, 34:3, 34:20
Jake [1] - 2:8
Jay [1] - 16:7
job [1] - 16:24
John [2] - 1:19, 5:23
joke [1] - 21:6
Julian [5] - 1:17, 5:6, 10:23, 19:15, 23:7

K

keep [2] - 6:20, 22:4
kind [4] - 5:7, 14:21, 14:22, 24:3
knee [1] - 32:13
Knowing [1] - 11:21
knowing [2] - 11:22
knowledge [2] - 11:21, 22:21

L

lacking [2] - 3:5, 4:9
LAFOUNTAIN [6] - 6:24, 7:20, 31:20, 32:15, 33:2, 33:5
LaFountain [1] - 1:16
land [1] - 14:15
landing [1] - 2:23
language [5] - 3:6, 17:3, 32:19, 32:20
last [4] - 5:8, 7:2, 25:8, 32:15
law [1] - 14:9
lawyer [1] - 28:8
learned [1] - 7:15
left [1] - 32:13
letter [1] - 19:12
letterheads [1] - 14:18
letters [1] - 14:17
level [1] - 32:11
liability [2] - 23:9, 23:10
Liam [3] - 1:16, 6:23, 7:21
line [1] - 8:15
lines [2] - 8:11, 8:17
list [3] - 4:18, 19:12, 19:13
littoral [3] - 8:11, 8:14, 8:17
local [15] - 6:6, 6:12, 7:10, 11:13, 14:25, 19:6, 25:20, 26:14, 28:16, 30:21, 30:25, 31:1, 31:3
location [2] - 12:7, 12:11
logic [1] - 22:11
look [7] - 4:24, 13:14, 16:6, 18:9, 32:7, 32:10, 33:1

M

Maine [6] - 1:4, 13:21, 14:2, 34:4, 34:15
maintaining [1] - 20:11
MALE [2] - 28:9, 28:20
Maliseet [1] - 14:9
map [3] - 12:7, 12:11
marsh [1] - 25:15
master [1] - 19:11
matter [2] - 7:3, 9:5
ME [1] - 1:22
mean [11] - 6:3, 8:2, 9:11, 9:16, 13:8, 14:2, 15:7, 16:17, 18:6, 20:2, 24:1
meet [1] - 4:17
meeting [1] - 33:11
Meeting [2] - 1:5, 2:6
mentioned [1] - 34:11
met [1] - 22:22
Mi'kmaq [1] - 14:4
mic [1] - 5:20
might [1] - 24:7
miles [3] - 6:3, 6:14, 11:22
minimum [1] - 13:19
Minutes [1] - 2:16
minutes [1] - 2:18
missing [1] - 3:14
month [1] - 2:18
months [1] - 20:4
most [1] - 14:18
motion [10] - 3:21, 27:10, 27:18, 28:12, 28:18, 29:16, 29:17, 31:18, 33:15, 33:16
move [1] - 4:25
moved [5] - 3:23, 4:1, 28:21, 29:20, 33:18
MR [256] - 2:6, 2:14, 2:25, 3:21, 3:24, 4:1, 4:8, 4:14, 4:21, 4:23, 5:3, 5:4, 5:5, 5:6, 5:7, 5:17, 5:18, 5:19, 5:21, 5:22, 5:23, 6:17, 6:18, 6:22, 6:24, 7:3, 7:20, 7:21, 7:22, 8:6, 8:21, 9:4, 9:15, 9:20, 9:21, 9:23, 9:24, 10:2, 10:3, 10:7, 10:8, 10:10, 10:13, 10:15, 10:16, 10:17, 10:19, 10:20, 10:21, 10:25, 11:1, 11:3, 11:4, 11:5, 11:6, 11:7, 11:12, 11:16, 11:19, 11:20, 11:25, 12:2, 12:3, 12:4, 12:6, 12:9, 12:10, 12:13, 12:16, 12:19, 12:20, 12:22, 12:23, 12:24, 13:3, 13:6, 13:7, 13:10, 13:12, 13:13, 13:25, 14:5, 14:6, 14:7, 14:8, 14:10, 14:12, 14:13, 14:14, 14:16, 14:20, 14:24, 15:6, 15:17, 15:18, 15:24, 16:1, 16:2, 16:11, 16:14, 16:16, 16:17, 16:20, 16:21, 17:1, 17:2, 17:7, 17:16, 17:19, 17:21, 17:22, 17:24, 18:2, 18:3, 18:5, 18:8, 18:9, 18:11, 18:12, 18:15, 18:16, 18:17, 18:18, 18:21, 18:23, 18:25, 19:1, 19:2, 19:9, 19:10, 19:15, 19:17, 19:18, 19:19, 19:20, 19:22, 19:23, 20:1, 20:7, 20:8, 20:12, 20:13, 20:15, 20:16, 20:18, 20:22, 21:1, 21:2, 21:4, 21:5, 21:7, 21:10, 21:11, 21:12, 21:13, 21:18, 21:20, 21:22, 21:23, 22:2, 22:15, 22:18, 23:1, 23:4, 23:6, 23:17, 23:18, 23:20, 23:21, 23:25, 24:1, 24:2, 24:3, 24:9, 24:10, 24:11, 24:15, 24:17, 24:18, 24:19, 24:20, 24:22, 24:24, 24:25, 25:2, 25:3, 25:6, 25:7, 25:8, 25:10, 25:21, 25:22, 26:7, 26:8, 26:9, 26:17, 26:20, 26:22, 26:24, 26:25, 27:4, 27:6, 27:7, 27:9, 27:10, 27:12, 27:13, 27:15, 27:16, 27:19, 27:20, 27:24, 27:25, 28:1, 28:3, 28:5, 28:8, 28:10, 28:21, 28:25, 29:1, 29:5, 29:17, 29:20, 30:1, 30:4, 30:8, 30:12, 30:15, 30:17, 30:23, 30:25, 31:1, 31:3, 31:4, 31:6, 31:9, 31:10, 31:13, 31:14, 31:15, 31:20, 32:14, 32:15, 32:17, 33:2, 33:3, 33:5, 33:6, 33:8, 33:12, 33:13, 33:14, 33:16, 33:18, 33:21
MS [19] - 3:25, 4:5, 4:13, 4:20, 4:22, 5:2, 19:25, 21:19, 22:3, 22:16, 22:23, 23:2, 23:5, 26:19, 29:22, 30:3, 30:7, 31:8, 33:17
multiple [1] - 29:24
must [1] - 14:2

N

name [1] - 5:23
nations [1] - 14:14
navigable [2] - 12:17, 13:5
navigate [1] - 20:2
navigation [3] - 12:18, 12:20, 13:8
near [1] - 31:23
necessarily [2] - 8:25, 10:3
necessary [1] - 33:10
need [11] - 3:17, 4:17, 16:8, 18:9, 18:10, 20:6, 25:22, 26:5, 27:25
needed [3] - 3:9, 4:14, 7:16
never [1] - 14:15
new [6] - 3:16, 5:9, 15:15, 26:11, 28:14, 30:18
newspaper [1] - 15:1
next [6] - 2:18, 12:16, 17:9, 29:8, 29:10, 33:11
none [3] - 2:15, 4:3, 29:1
normally [2] - 8:24, 9:17
Norman [7] - 1:14, 10:10, 16:17, 19:3, 19:8, 26:17, 28:5
Notary [2] - 34:3, 34:21
NOTE [1] - 2:1
notes [1] - 31:20
nothing [7] - 6:7, 6:21, 7:10, 7:17, 15:25, 20:9, 31:16
notice [1] - 30:5
notification [7] - 14:20, 23:15, 23:18, 25:7, 26:12, 28:14, 30:19
notified [2] - 14:22, 25:25
notify [2] - 24:16, 25:4
notifying [1] - 19:11

O

O'NEIL [19] - 3:25, 4:5, 4:13, 4:20, 4:22, 5:2, 19:25, 21:19, 22:3, 22:16, 22:23, 23:2, 23:5, 26:19,

29:22, 30:3, 30:7, 31:8, 33:17
O'Neil [1] - 1:15
obtain [7] - 5:8, 15:14, 15:21, 23:3, 26:11, 28:13, 30:18
obtained [2] - 5:14, 12:5
Office [2] - 6:12, 11:15
office [1] - 9:6
once [1] - 22:7
one [8] - 11:14, 15:22, 19:10, 24:5, 25:24, 26:4, 26:6, 27:18
open [1] - 32:18
Orchard [4] - 31:22, 31:25, 33:2, 33:3
order [2] - 2:7, 3:18
ordinance [5] - 3:3, 3:11, 3:13, 4:9, 27:16
Ordinances [1] - 2:21
original [2] - 3:13, 4:9
outcome [1] - 34:11
outlines [1] - 3:17
outlining [1] - 7:17
outside [1] - 23:13
overrides [1] - 26:6
overseeing [1] - 15:20
own [1] - 8:9
owners [1] - 9:10

P

P.O [1] - 1:22
package [1] - 2:17
packet [2] - 3:12, 3:19
panel [1] - 29:4
Panel [3] - 30:11, 31:12, 33:20
paperwork [1] - 33:10
paragraph [2] - 5:8, 22:7
Park [2] - 32:9, 33:9
parking [5] - 31:22, 31:24, 32:1, 32:5, 33:3
part [4] - 3:13, 14:15, 31:2, 32:9
PARTICIPANTS [1] - 1:14
particular [1] - 30:2
particularly [1] - 25:14
parts [1] - 31:5
pass [1] - 9:6
Passamaquoddy [1] - 14:4
path [2] - 20:6, 24:13
Paul [1] - 21:25
people [6] - 7:5, 10:14, 15:10, 20:23, 26:2, 33:1
pepper [1] - 7:23
perfect [1] - 27:24
Perfect [1] - 28:1
permission [15] - 5:9, 7:16, 10:24, 11:14, 11:16, 11:17, 11:18, 13:21, 14:17, 15:15, 16:9, 23:12, 26:11, 28:13, 30:18
permit [4] - 11:1, 15:23, 26:1, 26:2
permits [2] - 20:3, 24:21
person [5] - 9:7, 22:8, 22:13, 24:4, 34:10
perspective [2] - 23:7, 23:9
Phinney [1] - 1:18
PHINNEY [10] - 2:25, 4:8, 4:14, 4:21, 4:23, 5:3, 30:15, 30:23, 33:8, 33:13
piece [2] - 31:4, 31:6
pieces [1] - 22:16
pier [11] - 2:22, 3:8, 5:9, 6:5, 6:14, 8:8, 15:15, 18:7, 26:12, 28:14, 30:19
piers [3] - 3:4, 7:14
Pierson [1] - 2:8
place [2] - 9:7, 9:8
plan [3] - 8:3, 9:3, 9:4
planning [3] - 7:7, 7:8, 9:25
PLEASE [1] - 2:1
Pledge [2] - 2:10, 2:12
point [4] - 11:4, 16:5, 23:8, 32:22
policy [4] - 21:14, 27:3, 32:11
Policy [3] - 1:5, 20:10, 32:24
portion [2] - 31:25, 32:1
position [1] - 24:14
possession [1] - 10:5
possibility [1] - 9:9
possible [1] - 20:18
possibly [1] - 13:23
post [1] - 15:1
posted [1] - 15:3
potentially [2] - 24:7, 32:2
prepare [1] - 4:23
prepared [2] - 2:2, 32:21
prescribed [1] - 23:22
present [2] - 2:4, 32:22
Preservation [1] - 14:3
primarily [1] - 25:16
print [1] - 34:6
problem [4] - 13:24, 16:11, 16:14, 29:22
proceeding [3] - 2:4, 2:5, 24:21
process [23] - 3:19, 5:8, 5:12, 10:6, 11:13, 15:14, 15:20, 16:3, 16:25, 17:6, 18:13, 19:14, 22:6, 23:16, 23:19, 24:6, 25:19, 26:11, 27:5, 28:13, 29:12, 29:19, 30:18
processes [1] - 14:23
professional [3] - 20:19, 20:24, 21:3
project [5] - 8:17, 12:18, 12:21, 13:8, 24:5
properly [2] - 10:11, 25:25
property [6] - 8:9, 8:15, 9:10, 9:13, 9:19
protect [1] - 17:3
provide [3] - 3:7, 3:18, 10:1
provided [3] - 2:2, 2:4, 34:9
providing [1] - 4:10
Public [2] - 28:25, 34:3
public [3] - 4:2, 25:7, 28:24
Public/Court [1] - 34:21
pushing [1] - 32:23
put [5] - 6:7, 9:8, 16:4, 19:11, 32:12

Q

quality [1] - 2:3
questioning [1] - 8:23
questions [8] - 4:4, 6:19, 6:20, 6:22, 7:22, 7:24, 15:8, 17:5
quite [1] - 3:14

R

Randy [1] - 21:25
rather [1] - 17:11
read [7] - 10:23, 15:21, 22:6, 22:7, 27:21, 28:13, 30:15
reads [1] - 29:18
ready [1] - 33:11
really [6] - 15:19, 20:5, 22:11, 22:12, 25:12, 32:5
received [4] - 19:5, 26:15, 28:17, 30:21
recently [1] - 31:22
recited [1] - 2:13
recognize [2] - 19:4, 19:7
recommend [1] - 22:4
recommendation [1] - 4:7
recommended [1] - 27:14
recommends [1] - 20:10
record [3] - 9:2, 10:14, 34:7
recorded [3] - 8:5, 8:25, 10:4
recording [7] - 2:2, 2:4, 10:6, 33:22, 34:5, 34:8, 34:9
reduced [1] - 34:6
regard [3] - 25:13, 25:14, 32:19
regards [1] - 7:1
Registry [9] - 8:1, 8:3, 8:5, 8:24, 8:25, 9:2, 10:4, 10:12, 10:16
regs [2] - 13:15, 25:4
regulated [1] - 2:23
regulating [1] - 5:13
regulatory [10] - 6:8, 7:15, 11:23, 16:9, 20:14, 20:16, 21:17, 22:21, 23:11, 25:23
remain [1] - 32:5
Renee [1] - 1:15
repeat [1] - 13:17
replacement [1] - 7:8
replacing [1] - 7:6
reported [1] - 34:5
Reporter [2] - 1:21, 34:21
Reporting [1] - 1:21
request [1] - 32:25
require [3] - 9:12, 10:14, 13:15
required [4] - 4:24, 5:1, 8:13, 23:15
requirement [4] - 9:17, 14:9, 14:25, 15:2
requirements [3] - 8:22, 13:19, 22:22
requires [4] - 6:6, 10:18, 10:20, 12:14
requiring [3] - 8:14, 9:1, 12:10
responsibilities [2] - 5:16, 22:9
responsibility [10] - 5:11, 16:19, 17:12, 17:15, 21:8, 21:15, 25:13, 25:14, 29:9, 29:14
rest [1] - 6:25
result [1] - 9:9
retired [2] - 5:25, 7:13
returned [1] - 5:25
review [2] - 3:19, 5:12
reviewed [1] - 3:3
reviewing [1] - 32:2
rise [1] - 2:10
River [2] - 12:25, 13:1
Roby [4] - 11:14, 16:8, 18:10, 18:22
roby [1] - 11:16
Roby's [1] - 9:6
role [3] - 2:7, 6:2, 6:3

S

Saco [2] - 12:24, 13:1
safety [3] - 31:24, 32:3, 32:7
salt [1] - 25:15
sat [2] - 3:2, 3:5
satisfied [1] - 21:11
scenario [1] - 24:15
SCHAFER [104] - 5:17, 5:21, 5:23, 6:18, 7:3, 7:21, 8:6, 9:4, 9:20, 9:23, 10:2, 10:7, 10:10, 10:15, 10:17, 10:20, 10:25, 11:3, 11:5, 11:7, 11:16, 11:20, 12:2, 12:4,

12:9, 12:13, 12:19, 12:22, 12:24, 13:6, 13:10, 13:13, 14:5, 14:7, 14:10, 14:13, 14:16, 14:24, 15:17, 15:24, 16:2, 16:14, 17:1, 17:19, 17:22, 18:8, 18:11, 18:15, 18:17, 18:21, 18:25, 19:2, 19:15, 19:18, 19:20, 19:23, 20:1, 20:8, 20:13, 20:16, 20:22, 21:2, 21:10, 21:12, 21:18, 21:20, 21:23, 22:15, 22:18, 23:1, 23:4, 23:6, 23:17, 23:20, 23:25, 24:2, 24:9, 24:11, 24:17, 24:19, 24:22, 24:25, 25:3, 25:7, 25:10, 25:22, 26:8, 26:17, 26:22, 26:25, 27:6, 27:9, 27:12, 27:15, 27:19, 27:24, 28:1, 28:5, 28:25, 30:25, 31:3, 31:6, 31:9, 31:14
Schafer [2] - 1:19, 5:23
SCHLAVER [42] - 5:5, 5:7, 5:18, 6:17, 16:17, 16:21, 17:2, 17:16, 17:24, 18:3, 19:10, 19:17, 19:19, 19:22, 20:7, 20:12, 20:15, 20:18, 21:1, 21:4, 21:7, 21:11, 21:13, 21:22, 22:2, 23:13, 23:18, 23:21, 24:1, 24:3, 24:10, 24:15, 24:18, 24:20, 24:24, 25:2, 25:6, 25:8, 25:21, 26:7, 29:17, 33:16
Schlaver [1] - 1:17
seal [1] - 34:14
Seating [1] - 7:13
seawall [3] - 6:5, 6:14, 8:9
second [5] - 3:24, 3:25, 27:20, 29:18, 29:20
Seconded [1] - 26:21
seconded [6] - 4:1, 28:20, 28:21, 29:21, 33:17, 33:18
Section [1] - 2:22
section [2] - 3:3, 3:13
see [5] - 3:14, 16:7, 22:11, 32:3
Seeing [1] - 30:14
seeing [3] - 4:3, 7:2, 29:1
sense [1] - 27:1
sentence [13] - 10:22, 15:14, 15:21, 16:23, 17:9, 26:9, 26:10, 28:13, 29:8, 29:10, 29:18, 30:16, 30:17
September [1] - 34:14
series [1] - 7:24
set [2] - 30:6, 30:22
setback [2] - 8:14, 8:17
setbacks [1] - 8:13
shaded [1] - 3:15
shall [8] - 16:12, 17:8, 17:11, 17:14, 29:11, 29:15, 29:18, 29:23
Shape [1] - 7:14
Shellfish [1] - 3:2
shoreline [1] - 11:22
show [1] - 18:12
shows [1] - 12:11
side [2] - 18:19, 18:21
sides [2] - 31:24, 32:1
sign [4] - 17:17, 18:6, 18:23, 19:3
similarly [1] - 26:1
simple [1] - 6:21
simply [1] - 17:4
simultaneously [3] - 20:6, 25:12, 25:18
situation [2] - 24:3, 24:7
skill [2] - 2:3, 34:8
so-and-so [1] - 16:7
Society [1] - 13:22
someone [11] - 2:24, 11:14, 16:21, 16:22, 20:19, 23:16, 23:21, 24:16, 29:15, 29:23
sorry [1] - 15:17
sort [1] - 27:21
sound [2] - 15:21, 25:18
sounds [1] - 22:5
SPEAKER [2] - 3:23, 26:21
specifically [1] - 14:24
Springvale [1] - 1:22
staff [1] - 32:21
standpoint [1] - 21:14
stands [1] - 22:4
start [1] - 3:18
started [1] - 7:13
state [13] - 6:6, 6:11, 7:10, 14:9, 18:10, 19:5, 25:19, 26:14, 28:16, 30:21, 30:24, 30:25, 31:5
State [1] - 34:4
states [1] - 17:25
statutory [1] - 14:2
stays [1] - 10:5
stenographically [1] - 34:5
step [1] - 25:8
steps [1] - 26:4
still [2] - 14:16, 32:10
stop [2] - 24:20, 25:1
streamlines [1] - 20:5
Street [4] - 31:22, 31:25, 33:2, 33:3
street [2] - 31:25, 32:5
streets [1] - 32:3
structurally [1] - 25:17
structure [2] - 17:25, 25:17
stuff [1] - 8:3
subscribe [1] - 34:13
suggestion [3] - 19:3, 19:8, 27:2
survey [9] - 7:25, 8:23, 9:1, 9:12, 9:16, 9:18, 10:1, 10:3
surveyed [1] - 10:12
surveys [3] - 8:2, 8:24, 10:14

T

tedious [2] - 15:10, 15:11
tee [1] - 2:24
term [1] - 12:23
terms [1] - 3:8
text [3] - 3:12, 3:15
there'd [1] - 4:15
thereportinggroup maine@gmail.com [1] - 1:23
they've [1] - 7:6
thick [2] - 13:16, 13:17
three [5] - 16:9, 17:20, 20:13, 25:18, 25:22
ticked [1] - 22:16
tied [1] - 22:17
timeline [3] - 14:25, 23:19, 23:22
timing [1] - 30:2
together [1] - 6:7
took [2] - 13:10, 20:3
top [1] - 19:11
topographical [1] - 12:7
traffic [1] - 13:2
Transcribed [1] - 1:21
transcribed [1] - 2:5
transcript [1] - 2:1
Transcription [1] - 34:6
travel [1] - 2:8
tribal [4] - 30:24, 31:1, 31:4, 31:6
tribes [4] - 13:21, 24:16, 25:5, 25:24
tried [3] - 6:20, 13:13, 13:14
true [1] - 34:7
try [2] - 17:2, 32:23
trying [1] - 19:15
two [3] - 9:10, 16:5, 31:20
type [1] - 12:15
typically [1] - 9:11

U

ultimately [1] - 3:20
unable [1] - 16:22
unanimous [2] - 30:12, 31:13
under [1] - 8:18
underlined [1] - 3:15
unfortunately [2] - 15:9, 25:19
UNIDENTIFIED [4] - 3:23, 26:21, 28:9, 28:20
up [9] - 2:24, 3:5, 4:7, 5:19, 17:3, 21:5, 22:13, 27:23, 32:12
update [2] - 32:17, 33:8
USGS [1] - 12:7

V

verification [1] - 8:10
verifying [1] - 18:3
vote [2] - 27:22, 29:2
votes [4] - 29:4, 30:11, 31:12, 33:20

W

Ward [1] - 5:24
water [3] - 8:18, 8:20, 13:2
waterway [1] - 12:15
Waterways [1] - 2:21
waterways [1] - 25:13
wharf [10] - 2:22, 3:8, 5:9, 6:5, 6:14, 12:12, 15:15, 26:11, 28:14, 30:18
wharfs [2] - 3:4
WHEREOF [1] - 34:13
whole [1] - 18:13
WITNESS [1] - 34:13
wondered [1] - 23:13
word [2] - 13:10, 16:19
wording [2] - 19:18, 22:4
words [3] - 13:11, 16:12, 17:8
works [2] - 18:22, 32:24
world [1] - 5:22
worry [1] - 24:23
wrap [1] - 33:21
wrapping [1] - 22:13
write [1] - 21:21
writer [1] - 28:7
wrote [1] - 6:19

Y

years [2] - 5:25, 7:2
York [2] - 9:2, 10:4

Z

Zoom [4] - 2:2, 33:22, 34:4, 34:7

CITY OF BIDDEFORD
ZONING BOARD OF APPEALS

RE: 2025.001	)	
	)	MOTION/REQUEST ON BEHALF
JOHN SCHAFER, et al. Administrative Appeal of August 6, 2025 Planning Board Decision	)	OF CITY OF BIDDEFORD PLANNING BOARD/PLANNING DEPARTMENTS TO REMAND THIS MATTER TO THE PLANNING BOARD

1. This Matter is before the Zoning Board of Appeals, seeking review of a decision by the City of Biddeford Planning Board approving a marine pier to be constructed by the University of New England.
2. Pursuant to the City of Biddeford Code of Ordinances Section 74-35, no pier may be constructed without the permission of the harbormaster. The harbormaster reviews the subject application to determine whether the other regulatory bodies, such as the Saco River Corridor Commission and the Army Corp of Engineers have granted approval.
3. The City of Biddeford has learned that in 2001, when reviewing a request by the University of New England to construct dormitory buildings within the area that is subject to Saco River Corridor Commission regulation, a 250 foot no development zone was established.
4. As a result of that issue being raised after the Planning Board's August 6th approval, that is the subject of this appeal, City staff reviewed the Saco River Corridor Commission records as they relate to the University of New England. Those records revealed that the University of New England's Master Plan also references a 250 foot no development zone.
5. At the time of the City of Biddeford Planning Department and Planning Board review, the only ordinances reviewed were Site Plan Review and Shoreland Zoning. The pier application needs to be reviewed under the Master Plan as well.
6. It is the position of the City of Biddeford Planning Department that the Saco River Corridor Commission's failure to consider the 250 foot to development regulation should not be ignored. The City of Biddeford plans to seek Judicial Review of the Saco River Corridor Commission's decision to ignore the 250 foot no development regulation.

7. Further, the University of New England permit received from the Army Corp of Engineers had an expiration date of October 5, 2025, therefore another regulatory prerequisite is now not complete.
8. The Planning Department agrees that the issues raised by the appellants (John Schafer, et. al.) may be stayed and preserved, pending the Planning Board's review of the permit pursuant to the University of New England Master Plan.
9. The Planning Department alleges that this appeal gives the Zoning Board of Appeals jurisdiction to remand the application to the Planning Board to allow the Planning Board to consider the terms, conditions and requirements of the Master Plan.
10. The Planning Department alleges that the issues relating to the Saco River Corridor Commission and the Army Corp of Engineers require further review by the Planning Board, and such review is available and proper, given this appeal and the opportunity to remand the application to the Planning Board for consideration at a new hearing.

WHEREFORE the City of Biddeford Planning Department requests this Honorable Zoning Board of Appeals remand the University of New England marine pier application (2024.34) to the Planning Board for a new hearing to review the permit application under the University of New England Master Plan and to review the status of regulatory approvals from the Saco River Corridor Commission and the Army Corp of Engineers, and further to STAY this current appeal until the new hearing is complete.

Dated November 10, 2025

Harry B. Center, II, Esq.
Attorney for Planning Department
& Planning Board

2-Existing Physical Conditions

a. A scaled plan at a scale of not more than 1" = 200' showing the location of all existing buildings, structures, athletic fields and facilities, parking, walkways, service areas, and other impervious surfaces and the height of all buildings and structures referenced to the National Geodetic Vertical Datum (NGVD).

Drawing *MP-101, Existing Conditions Plan,* reflects the information requested under this section. Existing building heights (NGVD) are noted on that plan, which is located at the rear of this section.

b. A scaled plan at the same scale as the existing conditions plan showing the location of all existing utilities, sewer and water systems, and storm water drainage facilities.

Drawing *MP-102, Existing Utility Plan*, located at the rear of this section, shows existing utility information on the campus.

c. A natural resources inventory and analysis showing the location of all significant natural resources within those areas of the campus that are already developed or where development activities including clearing or filling are proposed or that will be potentially impacted by proposed development activities. The analysis shall assess the significance of these resources and the issues they raise with respect to the Master Plan. This shall include a plan at the same scale as the existing conditions plan showing the locations of the significant resources.

Based upon information obtained from previous projects on the campus, wetland mapping and delineation, and field observations by the University's wetland scientists, it was determined that there are no significant natural resources located in developed areas of the campus, nor where future development is proposed (see attached letter from Joe Noel). For locations of potential areas to be developed, please refer to the *Concept Campus Plan-Five Year Development Strategy* plan in the back of section 10. There are two drainage courses meeting the Maine Department of Environmental Protection's (MDEP) definition of streams located on the campus as shown on Drawing *MP-103, Topographic and Natural Resources Plan*. Additionally, several areas of forested wetlands are located on the undeveloped portions of the campus. None of these are remarkable, nor are they deemed to be of special significance by MDEP.

The Saco River and associated wetlands are located northerly of the campus. No development is proposed within 250 feet of the Saco River.

State records indicate that Hollow Joe-Pye Weed and Spotted Turtles have been observed in the vicinity of, but not on University property. All areas of existing development and areas proposed for development under the Master Plan were reviewed for the presence of these rare species or for suitable habitat. Neither was observed in the field by the University's wetland scientist.

Section 7 – Protection of Scenic Views

I. Development and Design Standards

The Institutional Master Plan shall establish development and design standards that shall apply to all development proposals and other improvements within the Institutional Zone. These development and design standards will apply to individual projects that are submitted for site plan review. These standards shall foster the development of a visually and architecturally integrated campus that is safe, environmentally sensitive, and that minimizes the adverse impact of the campus on neighboring residential areas. At a minimum, these development and design standards shall address the following areas:

7. Protection of Identified Scenic Views - The standards shall establish a standard approach for protecting scenic views within or from the campus that have been formally identified and approved by the City Council.

Protection of Identified Scenic Views

The University is aware that the City Planner's Office and the Conservation Commission have produced a draft "Biddeford Scenic Resource Protection Ordinance" listing specific view sheds as well as an overlay zone of 1,000 feet along the Saco River that would apply to the University campus if enacted as proposed. For purposes of this Master Plan, it would be premature to attempt to address the specific Ordinance provisions, as the Ordinance is in the very early stages of drafting and neither the Planning Board nor the City Council have had an opportunity to complete a public review process.

However, the city is assured that the basic scenic values at the heart of the proposed ordinance are already addressed through a comprehensive array of state, regional and City land use protections. Therefore, this Master Plan process, and the guiding framework of the City's recently enacted Institutional Zone Ordinance, have required careful consideration of scenic values throughout our Master Plan process.

The University must work within the confines of several laws that are fully protective of scenic values in fashioning its Master Plan:

State of Maine Site Location of Development Act, 38 MRSA section 484(3) and implementing regulations DEP Regulations Chapter 375(14) (providing that a proposed development may not have an unreasonable adverse effect on the scenic character of the surrounding area).

State of Maine Shoreland Protection Act, 38 MRSA section 435 "Shoreland Areas" and City of Biddeford implementing Shoreland Zoning Ordinance (providing for conservation of shore cover and visual access to inland and coastal waters in shoreland areas within 250 feet of the Saco River).

Saco River Corridor Commission law, 38 MRSA section 954, and implementing

regulations (protecting against despoilation of scenic areas in the Saco River Corridor, an area extending at least 500 feet from the Saco River).

Saco River Corridor Commission permit conditions, preventing UNE from building within [250 feet] of the Saco River.

City of Biddeford Institutional Zone, creating "No Build" Zones within UNE campus, and requiring creation of a Master Plan incorporating a number of development and design standards, including: landscaping; exterior lighting; architectural design standards; and scenic view standards. Some performance standards, such as landscaping, even require that the Master Plan detail how landscaping will enhance the visual environment of the campus.

In response, this Master Plan encompasses the protection of scenic values in its Architectural Design and Landscape designs standards.

Article V. Establishment of Zones

ATTACHMENTS
Table A: Table of Land Uses
Table B: Dimensional Requirements

Section 1. Classes of zones.

[Ord. No. 2001.90, § 3, 10-16-2001; Ord. No. 2003.4, 1-21-2003; Ord. No. 2003.66, 7-1-2003; amended 2-2-2010 by Ord. No. 2009.98]
For the purpose of this ordinance, the City is hereby divided into the following classes of zones:

Suburban Residential Zones to be known as SR Zones.
Coastal Residential Zones to be known as CR Zones.
Residential Zones to be known as R Zones.
Business Zones to be known as B Zones.
Industrial Zones to be known as I Zones.
Waterfront Zones to be known as W Zones.
Rural-Farm Zones to be known as R-F Zones.
Limited Rural-Farm Zones to be known as LR-F Zones.
Medical Zones to be known as M Zones.
Shoreland Zones to be known as RP-1, RP, LR, GD-1, GD-2, CFMA, and LC Zones.
Contract Zones to be known as CZ Zones.
Institutional Zones to be known as IN Zones.
Office Residential Zones to be known as OR Zones.
Main Street Revitalization District zones to be known as MSRD Zones.
Aquifer Protection Overlay Zones to be known as APO Zones.

Section 2. General description of zones and allowed uses.

[Ord. No. 2001.90, § 4, 10-16-2001; Ord. No. 2003.4, 1-21-2003; Ord. No. 2003.66, 7-1-2003; Ord. No. 2007.79, 9-4-2007]
The following section provides a brief general description and philosophy for each specific zone or district.

a. Suburban Residential Zone (SR-1): This zone is generally limited to single-family residential use, with provisions for professional offices in the home under special circumstances. These areas are typically large lot single-family homes on public sewer and water, or at least public water.

b. Coastal Residential Zone (CR): This zone was created to identify coastal areas with significant environmental or visual significance. The area is limited to single-family residential uses and some home offices under special circumstances. The zone is characterized by varying lot sizes dependent upon soil types.

j. Shoreland Zones (RP-1, RP, LR, GDI, GDII, CFMA, and LC): See Article **XIV** (Shoreland Zoning) for descriptions.
[Amended 2-2-2010 by Ord. No. 2009.98]

k. Contract/Conditional Use Zones (CZ #): Zones created by contract or agreement between a developer and the City Council, after review by the Planning Board. This zoning allows for uses not normally allowed within a specific district, because they have unique benefits to the general public or community. See Article V, Section **9**. Existing contract zones are listed as amendments to the Zoning Ordinance in Article **XIII**, Section **3**.
[Amended 2-2-2010 by Ord. No. 2009.98]

l. Institutional Zone (IN): The purpose of the Institutional Zone is to accommodate college and university uses while minimizing the adverse effects that such uses may have on the predominantly residentially zoned neighborhoods surrounding the institutional zone. All university uses or uses conducted by a college or university shall conform to an institutional master plan approved by the Planning Board in accordance with Article V, Section **11** of this Code.
[Amended 2-2-2010 by Ord. No. 2009.98]

m. Office Residential Zone (OR). It is the purpose of the OR Zone to provide for the orderly transition of older residential areas along the major traffic arteries to a mix of residential and low-intensity nonresidential uses. It is the intent of the OR Zone to enable existing properties to be converted to low-intensity office and service uses, provided that the established architectural character of the area is maintained, exterior display is limited, and that proposed conversions to nonresidential uses are subject to site plan review.
[Amended 2-2-2010 by Ord. No. 2009.98]

n. Main Street Revitalization District Zones (MSRD):
[Amended 2-2-2010 by Ord. No. 2009.98; 4-16-2013 by Ord. No. 2013.24]

MSRD-1: The commercial core district where the intent is to preserve the historic character of Biddeford while promoting the growth of businesses and residences in the district.

MSRD-2: The residential conservation district where the intent is to provide for areas of medium density while preserving the residential and historical character of the existing buildings while still providing opportunities for maintenance and remodeling of residences.

MSRD-3: The high-density and mixed-use district where the intent is to preserve the historic character of buildings while facilitating the redevelopment of vacant and underused mill buildings into a vibrant residential and commercial community which contributes to the revitalization of the City's downtown.

o. Aquifer Protection Overlay Zone (APO): It is the purpose of the APO Zone to protect the groundwater resources of the City of Biddeford by restricting the uses and activities on land overlying aquifer and aquifer recharge areas, to control the use and handling of hazardous substances that could lead to the degradation of aquifers and aquifer recharge areas, and to preserve and maintain the existing aquifer(s) in the City of Biddeford as a water supply source for use by the City's residents.

Section 3. Rules governing zone boundaries.

A. The above zones or districts shall be clearly presented and displayed on a map of the City of Biddeford. Said map shall be called the "Official Zoning Map of the City of Biddeford."

B. Changes to the Official Zoning Map shall be authorized by the City Council, upon recommendation by the Planning Board. A statement of such authorization, signed by the Mayor and City Clerk, and a description and date of approval by the Council of the change shall be affixed to the Official Zoning Map. The inking of line changes or other changes shall be completed by the City Engineering Department and approved by the City Planner and the Code Enforcement Officer.

materials.

7. Any person who wishes to contest the placement of their property in the Aquifer Protection Overlay District may appeal by applying to the City of Biddeford for rezoning of the property as provided by Article **XIII** of this ordinance. The applicant shall bear the burden of proof to demonstrate that the property should not be included within the Aquifer Protection Overlay District.

Section 11. Institutional master plan.

[Ord. No. 2001.90, § 7, 10-16-2001]

A. Applicability. Any university use or other use conducted by a college or university in an institutional zone shall be consistent with an institutional master plan approved by the Planning Board in accordance with this section. Any site plan approval or other approval for such uses shall be consistent with the approved institutional master plan.

B. Transition provisions.

1. Following the adoption of this section, the City shall continue to process any pending applications for site plan approval in the institutional zone and shall issue the required permits for these projects if approved and for any other approved but unbuilt projects. This shall include only the following University of New England projects:

   a. Construction of two approved residence halls;

   b. Expansion of the cafeteria;

   c. Construction of a facilities management building;

   d. Installation of lighting at the existing athletic fields.

2. The Planning Board shall not approve site plans for any other new or expanded buildings and structures, including parking lots, in the institutional zone not addressed in 1. until an institutional master plan has been approved for the college or university. Similarly, the City shall not issue building, plumbing, electrical, or other permits for any other new or expanded buildings or structures in the institutional zone not addressed in 1. until an institutional master plan is approved.

C. Coordination with site plan review. All projects in the institutional zone that require site plan review in accordance with Article XI of this Code shall continue to require site plan review and approval. In reviewing site plans for university uses or other uses conducted by a college or university in an institutional zone, the Planning Board shall consider the conformance of the proposed activities with the approved institutional master plan and shall approve the project only if it finds that the activities are consistent with the institutional master plan as well as the other standards of Article XI and the provisions of the institutional zone.

In its review of projects in the institutional zone, the Planning Board shall be guided by the approved institutional master plan and shall not impose conditions or requirements on an applicant that are in conflict with the approved institutional master plan. In those areas where the master plan addresses issues that are also covered by site plan review, the Planning Board shall be guided by the overall direction provided in the approved institutional master plan and shall limit the scope of its review under the site plan provisions to how the projects contained in the master plan are designed and constructed to conform to the standards of Section B of Article XI. The following chart outlines the respective areas of concern for the review of an institutional master plan and the site plans for individual projects contained in the master plan for those areas covered in both reviews:

Review Topic	Institutional Master Plan Review Focus	Site Plan Review Focus
Buildings, athletic facilities, and supporting structures	The need for the facilities is related to program growth and changes supported in the master plan, and the general sizes and locations are appropriate based upon those needs	The buildings and/or facilities generally conform to the approved master plan and meet the specific zoning and site plan review standards
Road network and traffic	The primary road network providing access to the campus and within the campus will be adequate to handle the anticipated increase in traffic safely and efficiently while minimizing the impact on other users as a result of the identified improvements	Any road or traffic improvements that are identified in the overall traffic management program in the master plan that are needed to support the specific development project will be built and will meet the technical standards set out in the ordinance
Parking	The amount of parking and general parking locations will be adequate to accommodate the anticipated increase in parking demand resulting from the growth and changes anticipated in the master plan	Any parking improvements that are identified in the overall parking program in the master plan that are needed to support the specific development project will be built and will meet the technical standards set out in the ordinance
Water and sewer	The water and sewer systems will be adequate to accommodate the anticipated increase in demand resulting from the growth and changes anticipated in the master plan	The location and design of the water and sewer facilities associated with the specific development proposal are consistent with the master plan and meet the technical standards set out in the ordinance
Landscaping, lighting, signs, noise, scenic views	The master plan establishes appropriate standards for the design of these elements and to minimize the impact on surrounding neighborhoods	The location and design of these elements are consistent with the standards set out in the master plan and meet any other applicable technical standards set out in the ordinance
Pedestrian and bicycle facilities	The pedestrian and bicycle facilities will be adequate to accommodate the anticipated increase in demand resulting from the growth and changes anticipated in the master plan and standards are established for the design of these elements	The location and design of these elements are consistent with the master plan, meet the standards set out in the master plan, and any other technical standards set out in ordinance

D. Variances. Notwithstanding the provisions of Section 4 of Article IX of this Code, the Zoning Board of Appeals shall not grant variances with respect to the dimensional standards of the institutional zone unless the need for such variation is identified in an approved institutional master plan and such variation is explicitly endorsed by the Planning Board in its approval of the master plan.

E. Timing of the initial master plan submission. Any college or university located within an institutional zone shall submit an institutional master plan meeting the requirements of this section to the Planning Board for review within two years of the adoption of this section.

F. Amendment of an approved master plan. A college or university may submit a request to amend the approved institutional master plan at any time provided that no request for an amendment shall be considered within three months of the date of the previous approval of the institutional master plan. The process, procedures, and standards for amending a master plan shall be the same as for the

initial approval, however, the applicant may submit an application containing only those items that have been changed from the prior master plan.

G. Submission and review procedures. The institutional master plan shall contain the information and exhibits set forth in Subsection **H**. Upon receipt of the initial submission of an institutional master plan or a proposed amended master plan, the application shall be processed and reviewed in accordance with the procedures for reviewing site plan applications with the following additional provisions:

1. Upon receipt of an institutional master plan or an amendment to an approved master plan, the City planning staff shall have 14 days to review the plan for completeness. If the staff finds that the master plan provides all of the information set forth in Subsection **H**, the staff shall find the plan to be complete, shall notify the applicant, in writing, of this determination, and shall place the master plan on the agenda of the next regularly scheduled Planning Board meeting. The applicant will forward 10 copies of the proposed master plan for Planning Board review. If the staff finds the master plan to be incomplete, it shall notify the applicant, in writing, of this determination and shall indicate the additional information required.

2. Upon receipt of an institutional master plan, the planning department shall notify all agencies and departments regularly notified of site plan applications as well as the Biddeford Conservation Commission and any neighborhood organization that has requested to be notified of the submission of the master plan.

3. Prior to the approval of an institutional master plan or an amended institutional master plan, the Planning Board shall hold a public hearing.

4. The Planning Board shall review the institutional master plan at a regularly scheduled meeting of the Board. The Board shall have 30 days following its initial consideration of the plan to approve, approve with conditions, or deny the master plan.

5. A copy of any approved institutional master plan or an amendment to a master plan shall be filed with the City Clerk.
[Amended 3-5-2019 by Ord. No. 2019.14]

H. Contents of the institutional master plan. An institutional master plan shall provide the City and abutting neighborhoods with a clear outline of the anticipated growth and changes of the institution over the next five to 10 years and the potential impact of those changes on the City and areas surrounding the institution. The master plan should, therefore, contain a description of the current programs and facilities of the college or university, a description of anticipated changes in programs and facilities over the next five years, an analysis of the potential impacts of the anticipated changes on the facilities and the surrounding neighborhoods, an assessment of actions proposed to mitigate any adverse impacts resulting from the anticipated changes, and a conceptual plan showing the approximate size and location of proposed facility improvements.

The institutional master plan shall contain at least the following information and exhibits:

1. Mission statement and institutional objectives.

   a. The institution's adopted mission statement.

   b. A statement of any anticipated changes in the institution's mission over the next five years.

   c. A statement of the institution's objectives with respect to growth and change over the next five years.

2. Existing physical conditions.

   a. A scaled plan at a scale of not more than one inch equals 200 feet showing the location of all existing buildings, structures, athletic fields and facilities, parking, walkways, service areas, and other impervious surfaces and the height of all buildings and structures referenced to the National Geodetic Vertical Datum (NGVD).

b. A scaled plan at the same scale as the existing conditions plan showing the location of all existing utilities, sewer and water systems, and stormwater drainage facilities.

c. A natural resources inventory and analysis showing the location of all significant natural resources within those areas of the campus that are already developed or where development activities including clearing or filling are proposed or that will be potentially impacted by proposed development activities. The analysis shall assess the significance of these resources and the issues they raise with respect to the master plan. This shall include a plan at the same scale as the existing conditions plan showing the locations of the significant resources.

d. An historic and archeological resources inventory and analysis showing the location of any known historic or archeological resources and any area with potential as an area of historic or archeological significance within those areas of the campus that are already developed or where development activities including clearing or filling are proposed or that will be potentially impacted by proposed development activities. This shall include a plan at the same scale as the existing conditions plan.

e. Data on the existing lot coverage and lot coverage ratio.

3. Programs and activities.

a. A narrative providing at least the following information about current programs and activities:

(1) The current educational programs and degree offerings.

(2) Other regularly scheduled programs or activities offered or hosted by the institution.

(3) Current enrollment of full time and part time students by head count based upon the most recent integrated postsecondary data survey (IPDS) report.

(4) Current employment by type of positions and full time/part time status by head count based upon the most recent IPDS report.

(5) The number of people living on campus.

b. A narrative describing how the programs and activities and the number of students, employees, campus residents, and program participants are anticipated to change over the next five years.

4. Educational, research, residential, support and athletic facilities.

a. A description and plan identifying what buildings and facilities are currently used for these purposes.

b. The current bed capacity of all residential buildings and the anticipated change in the total bed capacity.

c. A description of any significant changes in the type of use made of existing buildings, significant expansions of existing buildings, or new buildings and facilities that are anticipated to be needed in the next five years.

d. A description of how the anticipated changes in facilities relate to program changes and the institution's mission.

5. Parking and traffic.

a. Information on current traffic volumes and conditions including levels of service on the principal public streets and intersections of public streets within the zone and on the primary access routes to the campus.

b. A description of anticipated changes in traffic volumes over the next five years resulting from the changes in programs and facilities included in the master plan.

c. An analysis of the impact of these changes on traffic flow and vehicular and pedestrian safety on public streets within the zone and that provide access to the campus.

d. A proposed program of improvements to address any unacceptable impacts resulting from changes in traffic volumes including activities that will be undertaken to mitigate any adverse impacts on adjacent residential neighborhoods.

e. Information on the number and location of existing parking spaces.

f. An analysis of the adequacy of the existing parking to meet anticipated changes in programs and facilities over the next five years.

g. An assessment of pedestrian and bicycle movements and safety related to the parking supply and locations.

h. A proposed program of parking improvements to meet any identified deficiencies.

6. Water and sewer service.

a. A description of current provisions for water supply and sewage disposal including capacities, current utilization rates, and conformance with any permit or other legal standards.

b. An analysis of the change in demand for water supply and sewage disposal resulting from anticipated changes in programs and facilities over the next five years and the adequacy of the existing systems to meet this demand.

c. A proposed program of improvements to address any identified deficiencies.

d. A statement as to how water supply and sewer disposal improvements are or will be coordinated with City programs and the needs of neighboring residential areas.

7. Municipal and community services.

a. A description of all municipal and community services (police, fire, rescue, recreation, etc.) currently utilized by the institution and data on the current level of usage.

b. An analysis of the change in demand for municipal and community services and the adequacy of the existing services to meet this demand.

c. A proposed program of improvements to meet the identified deficiencies including proposed funding mechanisms.

8. Neighborhood impacts.

a. An assessment of how current campus activities impact neighboring residential areas including, but not limited to, traffic, noise, and visual intrusions. This assessment shall consider conformity to current City and state standards with respect to these items as well as documented evidence of any community or neighborhood concerns relative to these issues.

b. An evaluation of current efforts to mitigate these impacts.

c. An assessment of any changes in these impacts resulting from the changes in programs or facilities included in the master plan.

d. A program for mitigating the adverse impacts of proposed changes or improvements on surrounding residential neighborhoods.

9. Community outreach.

a. A description of current community outreach activities.

b. An analysis of anticipated changes in outreach activities over the next five years.

10. Conceptual development program.

a. A conceptual site plan at the same scale as the existing conditions plan showing the approximate size and location of proposed changes to buildings, structures, parking lots, pedestrian facilities, bicycle facilities, athletic fields and facilities, roads, and similar facilities proposed in the master plan. This should show new facilities, modifications or enlargements of existing facilities, and the planned removal of facilities.

b. An accompanying narrative or tables detailing the scale or size of the proposed improvements including the approximate height of buildings, the approximate peak elevation of buildings and structures referenced to NGVD, approximate floor area, approximate size of parking areas, or approximate occupancy.

c. A description of all development and design standards or provisions that will apply to the proposed improvements in accordance with Subsection **I**.

d. A schedule setting out when the improvements included in the conceptual development program are anticipated to be completed.

I. Development and design standards. The institutional master plan shall establish development and design standards that shall apply to all development proposals and other improvements within the institutional zone. These development and design standards will apply to individual projects that are submitted for site plan review. These standards shall foster the development of a visually and architecturally integrated campus that is safe, environmentally sensitive, and that minimizes the adverse impact of the campus on neighboring residential areas. At a minimum, these development and design standards shall address the following areas:

1. Landscaping. The standards shall establish a general pattern for all campus landscaping including the typical size and type of plantings and shall detail how landscaping will be used to enhance the visual environment of the campus, shield and soften service and parking areas, and minimize impacts on surrounding residential areas and the users of public streets through the campus.

2. Exterior lighting. The standards shall establish a general lighting theme for the campus and shall identify the appropriate maximum, average, or minimum illumination levels and uniformity ratios for various areas and facilities, the typical type of lighting fixtures and poles that will be used, and shall detail how night-time sky glow and light intrusion on neighboring residential areas will be minimized.

3. Signage. The standards shall establish a consistent design theme for all campus signs that enhances the visual environment of the campus and shall identify the general design, sizes, and locations for various types of campus signs.

4. Pedestrian and bicycle facilities. The standards shall establish an integrated program for accommodating pedestrians and bicyclists safely while promoting a campus environment that is pedestrian focused. The standards shall identify the types, general location, and typical design of various pedestrian and bicycle facilities.

5. Noise. The standards shall establish an overall program for minimizing the impact of campus noise on adjacent residential areas. The standards shall identify measures that will be employed to control noise at the source as well as to mitigate the impacts of noise on adjacent property.

6. Architectural design and details. The standards shall establish an integrated design theme for campus buildings that is harmonious with existing buildings while promoting a high level of design for new buildings. The standards shall address the scale and massing of buildings, appropriate materials and colors, rooflines, locations of building entrances, architectural

detailing, and similar features to create a visually attractive campus while minimizing impacts on surrounding residential areas.

7. Protection of identified scenic views. The standards shall establish a standard approach for protecting scenic views within or from the campus that have been formally identified and approved by the City Council.

J. Approval standards. In reviewing an institutional master plan, the Planning Board shall approve the master plan if it finds that:

1. The activities and facilities proposed in the master plan are consistent with the institution's mission statement.

2. The facilities conform to the requirements of the institutional zone and other applicable provisions of the zoning ordinance.

3. There is a reasonable expectation that individual projects carried out in accordance with the institutional master plan will be able to be designed so that they comply with the site plan review standards of Article XI.

4. The activities and facilities will be designed in a manner that will not unreasonably increase adverse impacts on adjacent residential neighborhoods or the facilities or services of the City of Biddeford.

5. The City Council and UNE shall establish a scholarship and community grant program, within the first six months of the acceptance of the university's master plan.

K. Appeals of Planning Board action. Appeals of the actions of the Planning Board in reviewing and approving institutional master plans under this section shall be to the City of Biddeford's Zoning Board of Appeals. The applicant and any party to the review of the institutional master plan may appeal any action of the Planning Board within 30 days of such action by providing written notice to the Board of Appeals setting forth the action being appealed and the specific basis for the appeal. Appeals of Planning Board actions in the review of an institutional master plan shall be processed in accordance with the procedures set out in Section **5** of Article IX of this ordinance.[1]

[1] *Editor's Note: The provisions of former Section 12, Medical marijuana dispensary moratorium, added 3-16-2010 by Ord. No. 2010.23, have expired and therefore are not included in the Code.*

Fecteau, Roby

From: Harry Center <hcenter@woodedlaw.com>
Sent: Monday, November 10, 2025 12:11 PM
To: Fecteau, Roby; Ron Schneider; Lisa A. Gilbreath
Cc: Hills Beach John
Subject: RE: EXT: ZBA Agenda
Attachments: Excerpts from 2003-07 MP relating to 250 ft. no dev.pdf

Caution: This is an external email. Please take care when clicking links or opening attachments. When in doubt, contact the IT Department

Ron

Thank you for the voicemail. I need to run to Portland for a mediation.

I'm sending this to all parties, because I expect that I will reference these excerpts from the 2003-2007 UNE Master Plan, dated February 24, 2003.

I hope this answers your question.

Thanks

Harry

Harry B. Center, II, Esq.
Woodman Edmands
234 Main Street
P.O. Box 468
Biddeford, Maine 04005
(207) 284-4581

CONFIDENTIALITY NOTICE: The contents in this message and any attachments are legally privileged and confidential and are intended only for the use of the designated recipient(s) stated above. If you are not the intended recipient, you may not review, copy or distribute either this message or any attachments. If you have received this message in error, please notify the sender immediately by telephone or reply e-mail and delete the entire message and any attachments. Thank you for your cooperation.

From: Harry Center
Sent: Monday, November 10, 2025 9:56 AM
To: Fecteau, Roby <Roby.Fecteau@Biddefordmaine.org>; Ron Schneider <rschneider5@une.edu>; Lisa A. Gilbreath <lgilbreath@pierceatwood.com>
Cc: Hills Beach John <hillsbeachjohn@yahoo.com>
Subject: RE: EXT: ZBA Agenda

Everyone:

This morning I have spoken with John Schafer and Ron Schneider, and made them aware of the attached filing. I am sending this as part of this email chain to ensure that all necessary participants received the attached.

Please let me know if you have any questions or need anything regarding this Request.

Roby- If you need a hard copy, I can walk one across the street to you this morning.

Thank you,

Harry Center

Harry B. Center, II, Esq.
Woodman Edmands
234 Main Street
P.O. Box 468
Biddeford, Maine 04005
(207) 284-4581

CONFIDENTIALITY NOTICE: The contents in this message and any attachments are legally privileged and confidential and are intended only for the use of the designated recipient(s) stated above. If you are not the intended recipient, you may not review, copy or distribute either this message or any attachments. If you have received this message in error, please notify the sender immediately by telephone or reply e-mail and delete the entire message and any attachments. Thank you for your cooperation.

From: Fecteau, Roby <Roby.Fecteau@Biddefordmaine.org>
Sent: Wednesday, November 5, 2025 2:59 PM
To: Ron Schneider <rschneider5@une.edu>; Lisa A. Gilbreath <lgilbreath@pierceatwood.com>
Cc: Hills Beach John <hillsbeachjohn@yahoo.com>; Harry Center <hcenter@woodedlaw.com>
Subject: RE: EXT: ZBA Agenda

As the staff liaison to the zoning board, I laid it out as the appellants will present. Then Attorney Center representing the Planning board, then UNE.

If I made a mistake, I'm sure Attorney Gilbreath will advise the board.

Roby Fecteau
Director of Code Enforcement &
Emergency Management
City of Biddeford
205 Main Street Suite 104
Monday- Tuesday 7:00 am – 5:00 pm
Wednesday- Thursday 8:00 am- 4:00 pm
Friday- Closed

From: Ron Schneider <rschneider5@une.edu>
Sent: Wednesday, November 5, 2025 2:50 PM
To: Fecteau, Roby <Roby.Fecteau@Biddefordmaine.org>; Lisa A. Gilbreath <lgilbreath@pierceatwood.com>
Cc: Hills Beach John <hillsbeachjohn@yahoo.com>; Center, Harry <hcenter@woodedlaw.com>
Subject: RE: EXT: ZBA Agenda

Caution: This is an external email. Please take care when clicking links or opening attachments. When in doubt, contact the IT Department

Good afternoon,

Thank you for sending the agenda. Are you able to clarify when the parties would make a presentation?

With regards,

Ron

Ron Schneider, Esq
General Counsel and Vice President of Legal Affairs

University of New England
11 Hills Beach Road
Biddeford, Maine 04005

207-602-2924



From: Fecteau, Roby <Roby.Fecteau@Biddefordmaine.org>
Sent: Thursday, October 30, 2025 12:37 PM
To: Hills Beach John <hillsbeachjohn@yahoo.com>; Ron Schneider <rschneider5@une.edu>; Center, Harry <hcenter@woodedlaw.com>
Cc: Lisa A. Gilbreath <lgilbreath@pierceatwood.com>
Subject: EXT: ZBA Agenda

This email originated from outside of UNE.

Good afternoon All:

Just wanted you aware that I have finished the agenda and it is posted on the City's website: Below is a link to see everything posted

https://biddefordme.portal.civicclerk.com/event/3141/overview

Fecteau, Roby

From: Harry Center <hcenter@woodedlaw.com>
Sent: Tuesday, November 11, 2025 11:46 AM
To: Fecteau, Roby; Ron Schneider; Lisa A. Gilbreath
Cc: Hills Beach John
Subject: RE: EXT: ZBA Agenda
Attachments: City Code Est Institutional Zone.pdf; Institutional Zone Ordinance.pdf

Caution: This is an external email. Please take care when clicking links or opening attachments. When in doubt, contact the IT Department

Everyone:

Upon further reflection and in preparation for Thursday evening, I am attaching two portions of the City's Land Use Ordinance. The first attachment sets forth the establishment of the Institutional Zone, with the second page stating that *"All university use...shall conform to an institutional master plan.."* (Art. V, (l)).

The second attachment is the Ordinance section enabling the master plan as a land use ordinance. (Art. V, § 11).

Yesterday I sent everyone the language directly from the master plan itself, referencing the 250 foot no development zone.

Harry Center

Harry B. Center, II, Esq.
Woodman Edmands
234 Main Street
P.O. Box 468
Biddeford, Maine 04005
(207) 284-4581

CONFIDENTIALITY NOTICE: The contents in this message and any attachments are legally privileged and confidential and are intended only for the use of the designated recipient(s) stated above. If you are not the intended recipient, you may not review, copy or distribute either this message or any attachments. If you have received this message in error, please notify the sender immediately by telephone or reply e-mail and delete the entire message and any attachments. Thank you for your cooperation.

From: Harry Center
Sent: Monday, November 10, 2025 5:33 PM

To: Fecteau, Roby <Roby.Fecteau@Biddefordmaine.org>; Ron Schneider <rschneider5@une.edu>; Lisa A. Gilbreath <lgilbreath@pierceatwood.com>
Cc: Hills Beach John <hillsbeachjohn@yahoo.com>
Subject: RE: EXT: ZBA Agenda

Roby:

May I request that you ask the ZBA legal counsel if my motion may be heard prior to consideration of the Appellant's arguments?

I feel that it would be a waste of resources if the arguments on the merits were heard if the matter is going to be remanded.

I respectfully suggest that if the ZBA does remand the application, then a potential aggrieved party may appeal after the Planning Board has acted on the application, with consideration to the Master Plan as well as the findings in the August, 2025 decision.

Thank you,

Harry Center

Harry B. Center, II, Esq.
Woodman Edmands
234 Main Street
P.O. Box 468
Biddeford, Maine 04005
(207) 284-4581

CONFIDENTIALITY NOTICE: The contents in this message and any attachments are legally privileged and confidential and are intended only for the use of the designated recipient(s) stated above. If you are not the intended recipient, you may not review, copy or distribute either this message or any attachments. If you have received this message in error, please notify the sender immediately by telephone or reply e-mail and delete the entire message and any attachments. Thank you for your cooperation.

From: Fecteau, Roby <Roby.Fecteau@Biddefordmaine.org>
Sent: Monday, November 10, 2025 5:21 PM
To: Harry Center <hcenter@woodedlaw.com>; Ron Schneider <rschneider5@une.edu>; Lisa A. Gilbreath <lgilbreath@pierceatwood.com>
Cc: Hills Beach John <hillsbeachjohn@yahoo.com>
Subject: RE: EXT: ZBA Agenda

Good afternoon All:

After consulting with the Zoning Boards Attorney, I have added these two documents to the agenda under.

4.b Planning Board Woodman Edmands; Attorney Harry Center

Roby Fecteau
Director of Code Enforcement &
Emergency Management
City of Biddeford
205 Main Street Suite 104
Monday- Tuesday 7:00 am – 5:00 pm
Wednesday- Thursday 8:00 am- 4:00 pm
Friday- Closed

From: Harry Center <hcenter@woodedlaw.com>
Sent: Monday, November 10, 2025 9:56 AM
To: Fecteau, Roby <Roby.Fecteau@Biddefordmaine.org>; Ron Schneider <rschneider5@une.edu>; Lisa A. Gilbreath <lgilbreath@pierceatwood.com>
Cc: Hills Beach John <hillsbeachjohn@yahoo.com>
Subject: RE: EXT: ZBA Agenda

Caution: This is an external email. Please take care when clicking links or opening attachments. When in doubt, contact the IT Department

Everyone:

This morning I have spoken with John Schafer and Ron Schneider, and made them aware of the attached filing. I am sending this as part of this email chain to ensure that all necessary participants received the attached.

Please let me know if you have any questions or need anything regarding this Request.

Roby- If you need a hard copy, I can walk one across the street to you this morning.

Thank you,

Harry Center

Harry B. Center, II, Esq.
Woodman Edmands
234 Main Street
P.O. Box 468
Biddeford, Maine 04005
(207) 284-4581

CONFIDENTIALITY NOTICE: The contents in this message and any attachments are legally privileged and confidential and are intended only for the use of the designated recipient(s) stated above. If you are not the intended recipient, you may not review, copy or distribute either this message or any attachments. If you have received this message in error, please notify the sender

immediately by telephone or reply e-mail and delete the entire message and any attachments. Thank you for your cooperation.

From: Fecteau, Roby <Roby.Fecteau@Biddefordmaine.org>
Sent: Wednesday, November 5, 2025 2:59 PM
To: Ron Schneider <rschneider5@une.edu>; Lisa A. Gilbreath <lgilbreath@pierceatwood.com>
Cc: Hills Beach John <hillsbeachjohn@yahoo.com>; Harry Center <hcenter@woodedlaw.com>
Subject: RE: EXT: ZBA Agenda

As the staff liaison to the zoning board, I laid it out as the appellants will present. Then Attorney Center representing the Planning board, then UNE.

If I made a mistake, I'm sure Attorney Gilbreath will advise the board.

Roby Fecteau
Director of Code Enforcement &
Emergency Management
City of Biddeford
205 Main Street Suite 104
Monday- Tuesday 7:00 am – 5:00 pm
Wednesday- Thursday 8:00 am- 4:00 pm
Friday- Closed

From: Ron Schneider <rschneider5@une.edu>
Sent: Wednesday, November 5, 2025 2:50 PM
To: Fecteau, Roby <Roby.Fecteau@Biddefordmaine.org>; Lisa A. Gilbreath <lgilbreath@pierceatwood.com>
Cc: Hills Beach John <hillsbeachjohn@yahoo.com>; Center, Harry <hcenter@woodedlaw.com>
Subject: RE: EXT: ZBA Agenda

> **Caution:**This is an external email. Please take care when clicking links or opening attachments. When in doubt, contact the IT Department

Good afternoon,

Thank you for sending the agenda. Are you able to clarify when the parties would make a presentation?

With regards,

Ron

Ron Schneider, Esq
General Counsel and Vice President of Legal Affairs

University of New England
11 Hills Beach Road
Biddeford, Maine 04005

207-602-2924

UNE UNIVERSITY OF NEW ENGLAND
INNOVATION FOR A HEALTHIER PLANET

From: Fecteau, Roby <Roby.Fecteau@Biddefordmaine.org>
Sent: Thursday, October 30, 2025 12:37 PM
To: Hills Beach John <hillsbeachjohn@yahoo.com>; Ron Schneider <rschneider5@une.edu>; Center, Harry <hcenter@woodedlaw.com>
Cc: Lisa A. Gilbreath <lgilbreath@pierceatwood.com>
Subject: EXT: ZBA Agenda

This email originated from outside of UNE.

Good afternoon All:

Just wanted you aware that I have finished the agenda and it is posted on the City's website: Below is a link to see everything posted

https://biddefordme.portal.civicclerk.com/event/3141/overview

Roby Fecteau
Director of Code Enforcement &
Emergency Management
City of Biddeford
205 Main Street Suite 104
Monday- Tuesday 7:00 am – 5:00 pm
Wednesday- Thursday 8:00 am- 4:00 pm
Friday- Closed

Fecteau, Roby

From: Harry Center <hcenter@woodedlaw.com>
Sent: Monday, November 10, 2025 5:33 PM
To: Fecteau, Roby; Ron Schneider; Lisa A. Gilbreath
Cc: Hills Beach John
Subject: RE: EXT: ZBA Agenda

Caution: This is an external email. Please take care when clicking links or opening attachments. When in doubt, contact the IT Department

Roby:

May I request that you ask the ZBA legal counsel if my motion may be heard prior to consideration of the Appellant's arguments?

I feel that it would be a waste of resources if the arguments on the merits were heard if the matter is going to be remanded.

I respectfully suggest that if the ZBA does remand the application, then a potential aggrieved party may appeal after the Planning Board has acted on the application, with consideration to the Master Plan as well as the findings in the August, 2025 decision.

Thank you,

Harry Center

Harry B. Center, II, Esq.
Woodman Edmands
234 Main Street
P.O. Box 468
Biddeford, Maine 04005
(207) 284-4581

CONFIDENTIALITY NOTICE: The contents in this message and any attachments are legally privileged and confidential and are intended only for the use of the designated recipient(s) stated above. If you are not the intended recipient, you may not review, copy or distribute either this message or any attachments. If you have received this message in error, please notify the sender immediately by telephone or reply e-mail and delete the entire message and any attachments. Thank you for your cooperation.

From: Fecteau, Roby <Roby.Fecteau@Biddefordmaine.org>
Sent: Monday, November 10, 2025 5:21 PM
To: Harry Center <hcenter@woodedlaw.com>; Ron Schneider <rschneider5@une.edu>; Lisa A. Gilbreath

<lgilbreath@pierceatwood.com>
Cc: Hills Beach John <hillsbeachjohn@yahoo.com>
Subject: RE: EXT: ZBA Agenda

Good afternoon All:

After consulting with the Zoning Boards Attorney, I have added these two documents to the agenda under.

4.b Planning Board Woodman Edmands; Attorney Harry Center

Roby Fecteau
Director of Code Enforcement &
Emergency Management
City of Biddeford
205 Main Street Suite 104
Monday- Tuesday 7:00 am – 5:00 pm
Wednesday- Thursday 8:00 am- 4:00 pm
Friday- Closed

From: Harry Center <hcenter@woodedlaw.com>
Sent: Monday, November 10, 2025 9:56 AM
To: Fecteau, Roby <Roby.Fecteau@Biddefordmaine.org>; Ron Schneider <rschneider5@une.edu>; Lisa A. Gilbreath <lgilbreath@pierceatwood.com>
Cc: Hills Beach John <hillsbeachjohn@yahoo.com>
Subject: RE: EXT: ZBA Agenda

Caution: This is an external email. Please take care when clicking links or opening attachments. When in doubt, contact the IT Department

Everyone:

This morning I have spoken with John Schafer and Ron Schneider, and made them aware of the attached filing. I am sending this as part of this email chain to ensure that all necessary participants received the attached.

Please let me know if you have any questions or need anything regarding this Request.

Roby- If you need a hard copy, I can walk one across the street to you this morning.

Thank you,

Harry Center

Harry B. Center, II, Esq.
Woodman Edmands

234 Main Street
P.O. Box 468
Biddeford, Maine 04005
(207) 284-4581

CONFIDENTIALITY NOTICE: The contents in this message and any attachments are legally privileged and confidential and are intended only for the use of the designated recipient(s) stated above. If you are not the intended recipient, you may not review, copy or distribute either this message or any attachments. If you have received this message in error, please notify the sender immediately by telephone or reply e-mail and delete the entire message and any attachments. Thank you for your cooperation.

From: Fecteau, Roby <Roby.Fecteau@Biddefordmaine.org>
Sent: Wednesday, November 5, 2025 2:59 PM
To: Ron Schneider <rschneider5@une.edu>; Lisa A. Gilbreath <lgilbreath@pierceatwood.com>
Cc: Hills Beach John <hillsbeachjohn@yahoo.com>; Harry Center <hcenter@woodedlaw.com>
Subject: RE: EXT: ZBA Agenda

As the staff liaison to the zoning board, I laid it out as the appellants will present. Then Attorney Center representing the Planning board, then UNE.

If I made a mistake, I'm sure Attorney Gilbreath will advise the board.

Roby Fecteau
Director of Code Enforcement &
Emergency Management
City of Biddeford
205 Main Street Suite 104
Monday- Tuesday 7:00 am – 5:00 pm
Wednesday- Thursday 8:00 am- 4:00 pm
Friday- Closed

From: Ron Schneider <rschneider5@une.edu>
Sent: Wednesday, November 5, 2025 2:50 PM
To: Fecteau, Roby <Roby.Fecteau@Biddefordmaine.org>; Lisa A. Gilbreath <lgilbreath@pierceatwood.com>
Cc: Hills Beach John <hillsbeachjohn@yahoo.com>; Center, Harry <hcenter@woodedlaw.com>
Subject: RE: EXT: ZBA Agenda

Caution: This is an external email. Please take care when clicking links or opening attachments. When in doubt, contact the IT Department

Good afternoon,

Thank you for sending the agenda. Are you able to clarify when the parties would make a presentation?

With regards,

Ron

Ron Schneider, Esq
General Counsel and Vice President of Legal Affairs

University of New England
11 Hills Beach Road
Biddeford, Maine 04005

207-602-2924

UNIVERSITY OF NEW ENGLAND
INNOVATION FOR A HEALTHIER PLANET

From: Fecteau, Roby <Roby.Fecteau@Biddefordmaine.org>
Sent: Thursday, October 30, 2025 12:37 PM
To: Hills Beach John <hillsbeachjohn@yahoo.com>; Ron Schneider <rschneider5@une.edu>; Center, Harry <hcenter@woodedlaw.com>
Cc: Lisa A. Gilbreath <lgilbreath@pierceatwood.com>
Subject: EXT: ZBA Agenda

This email originated from outside of UNE.

Good afternoon All:

Just wanted you aware that I have finished the agenda and it is posted on the City's website: Below is a link to see everything posted

https://biddefordme.portal.civicclerk.com/event/3141/overview

Roby Fecteau
Director of Code Enforcement &
Emergency Management
City of Biddeford
205 Main Street Suite 104
Monday- Tuesday 7:00 am – 5:00 pm
Wednesday- Thursday 8:00 am- 4:00 pm
Friday- Closed

Fecteau, Roby

From: Harry Center <hcenter@woodedlaw.com>
Sent: Monday, November 10, 2025 9:56 AM
To: Fecteau, Roby; Ron Schneider; Lisa A. Gilbreath
Cc: Hills Beach John
Subject: RE: EXT: ZBA Agenda
Attachments: Request to Remand and Stay.pdf

Caution: This is an external email. Please take care when clicking links or opening attachments. When in doubt, contact the IT Department

Everyone:

This morning I have spoken with John Schafer and Ron Schneider, and made them aware of the attached filing. I am sending this as part of this email chain to ensure that all necessary participants received the attached.

Please let me know if you have any questions or need anything regarding this Request.

Roby- If you need a hard copy, I can walk one across the street to you this morning.

Thank you,

Harry Center

Harry B. Center, II, Esq.
Woodman Edmands
234 Main Street
P.O. Box 468
Biddeford, Maine 04005
(207) 284-4581

CONFIDENTIALITY NOTICE: The contents in this message and any attachments are legally privileged and confidential and are intended only for the use of the designated recipient(s) stated above. If you are not the intended recipient, you may not review, copy or distribute either this message or any attachments. If you have received this message in error, please notify the sender immediately by telephone or reply e-mail and delete the entire message and any attachments. Thank you for your cooperation.

From: Fecteau, Roby <Roby.Fecteau@Biddefordmaine.org>
Sent: Wednesday, November 5, 2025 2:59 PM
To: Ron Schneider <rschneider5@une.edu>; Lisa A. Gilbreath <lgilbreath@pierceatwood.com>

Cc: Hills Beach John <hillsbeachjohn@yahoo.com>; Harry Center <hcenter@woodedlaw.com>
Subject: RE: EXT: ZBA Agenda

As the staff liaison to the zoning board, I laid it out as the appellants will present. Then Attorney Center representing the Planning board, then UNE.

If I made a mistake, I'm sure Attorney Gilbreath will advise the board.

Roby Fecteau
Director of Code Enforcement &
Emergency Management
City of Biddeford
205 Main Street Suite 104
Monday- Tuesday 7:00 am – 5:00 pm
Wednesday- Thursday 8:00 am- 4:00 pm
Friday- Closed

From: Ron Schneider <rschneider5@une.edu>
Sent: Wednesday, November 5, 2025 2:50 PM
To: Fecteau, Roby <Roby.Fecteau@Biddefordmaine.org>; Lisa A. Gilbreath <lgilbreath@pierceatwood.com>
Cc: Hills Beach John <hillsbeachjohn@yahoo.com>; Center, Harry <hcenter@woodedlaw.com>
Subject: RE: EXT: ZBA Agenda

> **Caution:**This is an external email. Please take care when clicking links or opening attachments. When in doubt, contact the IT Department

Good afternoon,

Thank you for sending the agenda. Are you able to clarify when the parties would make a presentation?

With regards,

Ron

Ron Schneider, Esq
General Counsel and Vice President of Legal Affairs

University of New England
11 Hills Beach Road
Biddeford, Maine 04005

207-602-2924

UNE UNIVERSITY OF NEW ENGLAND
INNOVATION FOR A HEALTHIER PLANET

From: Fecteau, Roby <Roby.Fecteau@Biddefordmaine.org>
Sent: Thursday, October 30, 2025 12:37 PM
To: Hills Beach John <hillsbeachjohn@yahoo.com>; Ron Schneider <rschneider5@une.edu>; Center, Harry <hcenter@woodedlaw.com>
Cc: Lisa A. Gilbreath <lgilbreath@pierceatwood.com>
Subject: EXT: ZBA Agenda

This email originated from outside of UNE.

Good afternoon All:

Just wanted you aware that I have finished the agenda and it is posted on the City's website: Below is a link to see everything posted .

https://biddefordme.portal.civicclerk.com/event/3141/overview

Roby Fecteau
Director of Code Enforcement &
Emergency Management
City of Biddeford
205 Main Street Suite 104
Monday- Tuesday 7:00 am – 5:00 pm
Wednesday- Thursday 8:00 am- 4:00 pm
Friday- Closed

UNIVERSITY OF NEW ENGLAND
INNOVATION FOR A HEALTHIER PLANET

Ron Schneider
General Counsel and
Vice President of Legal Affairs

Biddeford Campus
11 Hills Beach Road
Biddeford, ME 04005
U.S.A.

Portland Campus
716 Stevens Avenue
Portland, ME 04103
U.S.A.

Tangier Campus
Rue Abi Chouaib Doukkali
Tangier 90000
Morocco

T: (207) 602-2924
F: (207) 602-5953

www.une.edu

October 16, 2025

Via Email and Hand Delivery

City of Biddeford Zoning Board of Appeals
c/o Roby Fecteau, Director of Code Enforcement & Emergency Management
205 Main Street
Biddeford, Maine 04005

Re: Appeal of Planning Board Decision -- Case #2024.34 Final Plan Review University of New England (UNE) Site Plan and Shoreland Zoning Review Proposed Construction of a Marine Science Center Research Pier 11 Hills Beach Road (Map #52, Lot 4) located in the City's Institutional (IN) Zoning District

Dear Members of the Biddeford Zoning Board of Appeals,

I am writing as counsel for University of New England ("UNE") in response to an appeal from the August 6, 2025 decision of the Biddeford Planning Board to approve UNE's application for shoreland zoning and site plan approval to construct a research pier for use by students and faculty conducting research and engaging in educational activities as part of their work in UNE's Arthur P. Girard Marine Science Center. UNE submits that the appeal should be denied because (1) Appellant has no standing, and (2) Appellant fails to demonstrate that the Planning Board could not approve UNE's application to the Planning Board because a harbormaster did not approve the design and location of UNE's proposed pier.

First, it must be recognized that there has been a significant amount of public discourse about UNE's proposed research pier. There has been a fair bit of public pressure brought to bear on certain public officials within the City of Biddeford. While the pressure may not be reflective of a large percentage of the City's population, there can be no denying that the communications by those who oppose the proposed pier have been constant and voluminous.

It is this Board's legal duty to ignore such pressure. This Board is an adjudicatory body and not a political one. This Board must apply the law and the City's Ordinances fairly, accurately, and dispassionately and as they exist and not how some might want them to be.

UNE is confident that the majority of the Planning Board followed the law and the City's Ordinance fairly and accurately, consistent with the professional opinions of the City's Planning Department staff. The majority of the Planning Board did not bow to the pressure to consider

information that was not relevant to criteria in the ordinances that governed their decision, namely whether a harbormaster approved or denied the design and location of UNE's pier. The majority listened to the City's lawyer when he instructed them on their legal duty, telling them that the Planning Board's "review of [UNE's application before the Board] must be limited to the applicable city ordinances." (*See* June 11, 2025 Memorandum to Biddeford Planning Board from Harry Center, at page UNE 1.)[1] The majority listened when Attorney Center stated clearly in his June 11, 2025 Memorandum, "There is not a provision within Article 14 § 15(C), in the Shoreland zoning ordinance or site plan review, which authorizes the planning board to review the permission requirement in the city's Harbor ordinance." (*See* Memorandum at UNE 1.)

UNE is equally confident that if this Board applies the law and the City's Ordinances fairly and accurately, this Board will deny the Appeal. UNE requests that this Board deny the appeal for two fundamental reasons.

First, Appellant John Schafer has no standing to bring the appeal because he is not an aggrieved person as defined in Biddeford's Code of Ordinances. He is not an abutter, his property is not directly or indirectly affected, and he cannot articulate a particularized injury distinct from that of the general public.

Second, Mr. Schafer raises issues that are not relevant to any regulatory criteria that governed the Planning Board's decision. His appeal ultimately rests on the erroneous claim that the Biddeford harbormaster, or a harbormaster, was required to approve UNE's proposed pier design and location before the Planning Board could consider and approve UNE's application to the Planning Board. His claim has no foundation in fact or law.

Simply put, approval of the pier by a harbormaster is not a prerequisite to Planning Board approval of UNE's application for shoreland zoning/site plan review and approval. Moreover, Biddeford's Harbor Ordinance governing the construction of a pier, Section 74-35, does not authorize Biddeford's harbormaster to evaluate and approve or deny the design or location of a pier. Rather, as Mr. Schafer, the drafter of the current Section 74-35, himself said on August 7, 2023, the harbormaster is "nothing but a facilitator" of the process that a person must follow to receive approvals from other local, state, and federal regulatory authorities.

Ultimately, even if this Board were to conclude that Mr. Schafer has standing to bring an appeal, Mr. Schafer does not and cannot point to any applicable ordinance or any other piece of evidence that could lead this Board to conclude that the Planning Board's decision was erroneous in any way. Therefore, his appeal should be dismissed.

---

[1]The City Solicitor, Harry Center, provided legal advice to the Planning Board orally and through the issuance of several legal memoranda, which are part of the record before the Planning Board and which are attached for convenience. The attachments are numbered in the lower right-hand corner with a prefix "UNE" followed by a page number.

I. THE APPEAL SHOULD BE DISMISSED BECAUSE APPELLANT IS NOT AN "AGGRIEVED PARTY" AND, THEREFORE, DOES NOT HAVE STANDING TO BRING AN APPEAL

Only an aggrieved party can bring an appeal. Mr. Schafer is the only appellant, yet he is not an aggrieved party. Mr. Schafer bears the burden of demonstrating that he is an "aggrieved party" entitled to appeal the Planning Board's approval.[2] Both Article II, Section 2 of Biddeford's Land Development Regulations and in Article IV, Section 17 of Biddeford's Shoreland Zoning Ordinance define an "aggrieved party" as follows:

> An owner of land whose property is directly or indirectly affected by the granting or denial of a permit or variance under this ordinance; a person whose land abuts land for which a permit or variance has been granted; or any other person or group of persons who have suffered particularized injury as a result of the granting or denial of such permit or variance.

An "abutter" is defined as follows:

> The owner of any property within 200 feet of the property involved in an application or appeal and/or the owner of any property with one or more common boundaries, or across the street or stream from, the property involved in an application or appeal.

See Part III, Article II, Section 2, Biddeford Land Development Regulations.

First, Mr. Schafer is not an abutter. As a person who lives at 24 Sky Harbor Drive, Mr. Schafer lives more than the ordinance-defined 200 feet from UNE's property. Mr. Schafer will not be able to demonstrate that he is an abutter.

Similarly, Mr. Schafer cannot demonstrate that his "property is directly or indirectly affected" by the building of a pier on the Saco River. As shown in the Google Maps photo below, Mr. Schafer's property is located with water frontage on Biddeford Pool, approximately 1.3 miles by land from UNE's property. In no way is Mr. Schafer's ***property*** located on Biddeford Pool affected by a pier built on the Saco River.

In the map photos below on the next page, 24 Sky Harbor Drive is indicated by red pins.

[2] *See Friends of Lincoln Lakes v. Town of Lincoln*, 2010 ME 78, ¶ 12, 2 A.3d 284, 288.





Finally, Mr. Schafer cannot establish that he has experienced a "particularized injury," which "occurs when a judgment or order adversely and directly affects a party's property, pecuniary, or personal rights."[3] Any claim of injury by Mr. Schafer must be "distinct from that suffered by the

[3] *Nergaard v. Town of Westport Island*, 2009 ME 56, ¶ 18, 973 A.2d 735, 740; *see also Friends of Lincoln Lakes v. Town of Lincoln*, 2010 ME 78, *at* ¶ 14.

public at large."[4] The law does not recognize "drive by standing" to appeal the decision of a Planning Board.[5] Simply, even if Mr. Schafer could articulate a personal injury, he will not be able to show that any claimed injury is distinct from the public at large.

Therefore, Mr. Schafer's appeal must be dismissed for lack of standing as an aggrieved party.

II. AN APPELLATE STANDARD OF REVIEW MUST BE APPLIED

If this Board were to determine that Mr. Schafer has standing to bring an appeal, this Board must determine the standard of review, namely whether this Board will apply an appellate review of the issues raised by Mr. Schafer or whether this Board will apply a *de novo* review standard. As detailed below, given that the focus of Mr. Schafer's claims is on the pier itself, which is governed by the Biddeford Shoreland Zoning Ordinance, this Board must apply an appellate standard of review set forth in the Shoreland Zoning Ordinance.

First, it is important to point out that regardless of the standard of review, this Board may only review the particular errors claimed by Mr. Schafer and not engage in a wholesale readjudication of the Planning Board's process and decision.[6] In this case, Mr. Schafer alleges that UNE's application for site plan approval was incomplete for the following reasons: (1) a harbormaster did not review and approve the location of UNE's proposed pier; and (2) UNE did not provide a copy of it application with the National Institute of Standards & Technology ("NIST") after Planning Board member Larry Patoine expressed interest in receiving it. Under any standard of review this Board applies, this Board may only review those two issues.

The Shoreland Zoning Ordinance, which is contained within the Land Use Development Regulations section of the Biddeford Code of Ordinances, clearly provides for an appellate review, and not a *de novo* review, of Planning Board decisions relevant to the Shoreland Zoning Ordinance. Specifically, Section 16.G.4 of Part III, Article XIV, which is the Shoreland Zoning Ordinance, provides as follows:

> When the Zoning Board of Appeals hears a decision of the Planning Board, it shall hold an appellate hearing, and may reverse the decision of the Planning Board only upon finding that the decision was contrary to specific provisions of the ordinance or contrary to the facts presented to the Planning Board. The Zoning Board of Appeals may only review the record of the proceedings before the Planning Board. The Zoning Board Appeals shall not receive or consider any evidence which was not presented to the Planning Board, but the Zoning Board of Appeals may receive and consider written or oral arguments. If the Zoning

---

[4] *Friends of Lincoln Lakes v. Town of Lincoln*, 2010 ME 78, at ¶ 14.

[5] *See Nergaard v. Town of Westport Island*, 2009 ME 56, ¶ 31 (Alexander, J, concurring).

[6] *See Campbell v. City of South Portland*, 2015 ME 125, ¶¶ 14-18, 123 A.3d 994, 999-1000 (finding that petitioner did not preserve issue for appeal that was not articulated in notice of appeal).

> Board of Appeals determines that the record of the Planning Board proceedings are inadequate, the Zoning Board of Appeals may remand the matter to the Planning Board for additional fact finding.

This language clearly requires an appellate review and not a *de novo* review of the Planning Board's decision.[7]

Mr. Schafer's claim of error by the Planning Board is focused on the pier itself, namely the location of the pier and the fact that the pier's design and location were not approved by a harbormaster. The pier itself is governed by Section 15.C of the Land Use Standards contained within the Shoreland Zoning Ordinance. Specifically, Section 15.C. governs "Piers, docks, wharfs, bridges and other structures and uses extending over or below the normal high-water line of a water body or within a wetland." The July 28, 2025 Planning Board Staff Report at 19-21 confirms that Section 15.C. of the Shoreland Zoning Ordinance portion applied to the pier itself.[8]

Of course, UNE's project was subject to Site Plan Review as well under the site review criteria contained in from the Part III Land Development Regulations, Article XI, Section 5 Biddeford's Code of Ordinances. The site review criteria, however, does not focus on the pier itself but rather touches on a shed on the pier, lighting for the pier, setbacks, and the handicap accessibility of the pier. (*See attached* July 28, 2025 Planning Board Staff Report at UNE 49-61.) Mr. Schafer's appeal does not articulate any issue or concern with those aspects of UNE's project. In other words, the issues raised by Mr. Schafer do not touch on any of the Site Plan Review criteria.

Therefore, this Board should apply the appellate standard of review contained within the Shoreland Zoning Ordinance and not apply any standard of review provided for in Article IX, Section 5 of the Biddeford Code of Ordinance.

III. IF THIS BOARD REACHES THE MERITS OF THE APPEAL, THIS BOARD SHOULD DENY THE APPEAL

Mr. Schafer insists that the Planning Board's decision "was improper" because either the Planning Board believed erroneously that a harbormaster had "approved the design and location of UNE's pier" or the Planning Board approved UNE's application by "ignoring all evidence" that a harbormaster must first approve the design and location of UNE's pier but did not. There are two premises underlying Mr. Schafer's assertion. One, that harbormaster approval of the design and location of UNE's proposed pier had to occur before the Planning Board could provide its regulatory approval. Two, that the Biddeford Harbormaster has the legal authority to approve the design and location of any pier. Both premises are false and devoid of any legal basis. As will be

---

[7] *See Gensheimer v. Town of Phippsburg*, 2005 ME 22, ¶ 11, 868 A.2d 161, 165 (concluding that nearly identical language required an appellate review). *See also Friends of Lamoine v. Town of Lamoine*, 2020 ME 70, ¶ 18, 234 A.3d 214, 221.

[8] The Planning Staff Report is part of the record on appeal and was considered by the Planning Board. It is attached for convenience purposes.

explain in detail below, (1) harbormaster approval of the design and location of a pier is not required before the Planning Board can conduct its business and (2) the City's so-called Harbor Ordinance does not provide the Harbormaster with the legal authority to review, evaluate, and approve or deny the design and location of a proposed pier. As a result, Mr. Schafer's appeal must fail.

1. The Planning Board Was Required to Apply the City's Ordinances as They Existed and Not How Some Might Wish Them to Have Existed

In the pages below, what is required or authorized by the applicable ordinances will be discussed in detail. But first, it is important to make very clear that the Planning Board was required to follow the ordinances that applied to the Planning Board. The Planning Board was not free to add to or alter those ordinances.

The Biddeford City Council is the governmental body responsible for the content of the City's Code of Ordinances; it is Biddeford's legislative body. The Planning Board is not a legislative body but rather is an administrative, regulatory, or reviewing body that derives its authority from applicable ordinances and must act in accordance with those applicable ordinances. In other words, the City Council makes the law and the Planning Board applies the law.

The criteria and standards applicable to UNE's proposed pier project are enshrined in writing within the Code of Ordinances. Ordinances can be amended only by the City Council. The Planning Board had no power to amend the applicable ordinances, and a majority of the Planning Board correctly refused to do so during the review of UNE's proposed pier project.[9]

These fundamental legal and procedural principles were articulated time and again by Attorney Center, the City's lawyer, as he sought to guide the Planning Board through what was at times a tumultuous process. He correctly, specifically instructed the Planning Board to limit its review to the standards and criteria contained within the Shoreland Zoning Ordinance and the Site Plan Review ordinances. He did not instruct the Planning Board in an attempt to tip the scales in favor of approving the proposed pier as some have suggested. Rather, he did so because he understands the law and because, like any good, experienced lawyer, he wanted to make sure that his client based whatever decision they made on firm legal ground.

It is worth examining two decisions of the Maine Supreme Judicial Court to understand the soundness of Attorney Center's advice to his client. In 1970, the Court reversed the Bangor Zoning Board of Appeals' denial of a permit for a gasoline service station. The Court concluded that the

[9] The Planning Board is empowered to "[d]raft for approval by the municipal officers, ordinances …" but it is not empowered to enact or adopt ordinances as that power lies with the City Council. *See* Part III, Art. X, § 1(B)(4) of the Revised Code of Ordinances. The City Council and the Mayor are the City's "municipal officers." *See* Part I, Art. I, § 2 and Art. III, § 2.

Bangor ZBA applied a standard that did not exist in the applicable ordinance and that "the Board's denial of plaintiffs' application was an unlawful exercise of authority conferred upon it by the zoning ordinance."[10] The Court made it clear that the ZBA had the conferred power to "hear and decide" but had to do so by adhering to the ordinances as they existed. The Court wrote:

> The fact remains that the Board must act under the provisions of the zoning ordinance as it now stands. It cannot lawfully use its power of approval of permitted conditional uses to produce the effect of an amendment which has not as yet and may never be adopted. Such a practice, if permitted, would amount to usurpation of a purely legislative function. The practical effect would be lot by lot zoning at the whim of the Board.[11]

Likewise, the Planning Board in this matter could not add to the applicable ordinances and change the rules in the middle of the game. The Planning Board could not add and apply criteria that did not exist in the ordinances as they were urged to do by the opponents of the proposed pier, including the Appellant, Mr. Schafer.

In a more recent case, in June of this year, the Court reversed a Newfield Planning Board's decision to condition its approval of an application on the Board's ability to modify the permit after issuing it despite there being no provision in the town's ordinance allowing such a condition. The Court recognized that the law requires that "any conditions imposed must be authorized by the enabling ordinance and defined clearly when a permit is granted so that the permittee understands what is required."[12] Because there was no provision in the applicable ordinance that would allow the Newfield Planning Board to modify a permit after it was issued, the Court concluded that the conditions imposed by the Board were "outside the Planning Board's authority" and that the conditions did "not clearly define what was required" of Newfield Sand.[13]

In this matter, opponents urged the Planning Board to add a condition to approval, namely the requirement of harbormaster approval of the design and location of the proposed pier before the Planning Board could vote. As explained below, that condition does not exist in the applicable ordinances. Therefore, the imposition of such a condition was beyond the Planning Board's authority. In effect, Mr. Schafer asks this Zoning Board of Appeals to reverse the Planning Board's decision because a majority of the Planning Board refused to act beyond the Planning Board's authority. This Board must reject his request and deny the appeal.

---

[10] *See Phillips Petroleum Co v. Zoning Board of Appeals of City of Bangor*, 260 A.2d 434, 437 (Me. 1970).

[11] *Id.* at 436-37.

[12] *See Newfield Sand v. Town of Newfield*, 2025 ME 45, ¶ 17, 335 A.3d 626, 630.

[13] *Id.* at ¶ 24.

2. Approval by a Harbormaster Is Not A Prerequisite to Planning Board Approval

However hard one looks, there is no provision in the Biddeford Code of Ordinances requiring a harbormaster to review and approve a pier and its location before the Planning Board can apply the ordinances that govern it. It is notable that Mr. Schafer fails to cite to any provision of the Shoreland Zoning Ordinance (or Site Plan Review criteria) that requires an applicant in front of the Planning Board to have received harbormaster approval of their project prior to the Planning Board making a decision.[14] Mr. Schafer does not cite to any provision because he cannot; it does not exist. In fact, if the Planning Board had refused to approve UNE's application because a harbormaster had not reviewed and approved the location of the proposed pier, the Planning Board would have been in error.[15] Simply, Mr. Schafer does not and cannot show that the Planning Board had to wait for approval by a harbormaster. He cannot show that the Planning Board's decision "was contrary to specific provisions of the ordinance or contrary to the facts presented to the Planning Board." Therefore, the appeal should be denied.

3. The Biddeford Harbormaster Does Not Have Any Authority to Approve a Pier as Mr. Schafer Claims; The Harbor Ordinance Relegates the Harbormaster to a Guide or Facilitator of a Process

In addition to there being no provision in Biddeford's ordinance preventing the Planning Board from acting until a harbormaster reviewed and approved the location of the proposed pier, it is important for this Board to understand that the Harbor Ordinance, Section 74-35, does not provide the harbormaster with the authority to review and approve or deny a pier and its location. Not only does Mr. Schafer's appeal rely on the erroneous claim that a harbormaster must approve the design and location of a pier before the Planning Board can act, his appeal also relies on the equally erroneous claim that the City's Harbormaster ever reviews and approves the design and location of pier.

During the Planning Board process, there was a great deal of discussion about the Biddeford Harbormaster's role in the process of a person obtaining approval to build a pier. Most of the discussion was based on misunderstanding, misinformation, or misdirection. The unassailable fact is that Section 74-35 intentionally does not provide the City's Harbormaster with the authority to evaluate and approve or deny a pier's design or its location. Section 74-35 is simply a "blueprint" for an applicant to follow to obtain regulatory approval from certain other local, state, and federal

[14] By way of example of a time when an external approval is required, the Shoreland Zoning Ordinance does require that UNE received approval from the Department of Environmental Protection, which UNE did in fact receive. (*See* July 28, 2025 Planning Staff Report at UNE 62-63.)

[15] As stated above, in his June 11, 2025 Memorandum, Attorney Center affirmed that there was no such provision when he wrote clearly: "There is not a provision within Article 14 § 15(C), in the Shoreland zoning ordinance or site plan review, which authorizes the planning board to review the permission requirement in the city's Harbor ordinance." (*See* Memorandum at UNE 1.)

regulatory bodies, with the Harbormaster simply facilitating that process and not approving the pier itself or the location.

There are no criteria contained within Section 74-35 by which a harbormaster would review, evaluate, and approve or deny a pier's design or its location. The Biddeford harbormaster's role is intentionally limited to guiding an applicant, if they need it, through the process of obtaining approval from other local, state, and federal regulatory bodies. The harbormaster is "nothing but a facilitator" who engages in the ministerial act of signing off that an applicant has in fact sought and obtained all approvals. The harbormaster does not provide a permit or otherwise provide any document that approves or denies a pier. In short, although people stood before the Planning Board and lamented the fact that a harbormaster did not approve the design and location of UNE's proposed pier, such approval was not possible because the harbormaster has no legal authority to evaluate, review, and approve or deny a pier's design or its location.

a. *Section 74-35 Must Be Read in its Entirety and Interpreted According to Established Rules of Interpretation*

In order to properly understand Section 73-35, a person has to apply certain rules of interpretation that Maine's highest court has established. As Attorney Center discussed in his July 8, 2024 memo, the interpretation of an ordinance (or any law or regulation) begins with a reading of the plain language and then, if appropriate, the intent of those who enacted the ordinance. (*See* attached July 8, 2024 Memo at UNE 3.) In short, one must focus on what Section 74-35's plain language says in whole and may, when appropriate, examine what the drafters of the language said about what they wrote.

Further, Section 74-35 must be read with an understanding that ordinances (and all laws and regulations) must provide a "guide which will enable those to whom the law is to be applied to reasonably determine their rights thereunder, and so that the determination of those rights will not be left to the purely arbitrary discretion of the administrator."[16] Likewise, an ordinance must also guide a government actor so that they know the standard by which they will make a decision with respect to a person's rights.

An ordinance that does not provide the requisite guide to applicants, or the decision maker, cannot be used to apply standards that do not exist in the ordinance. When a law, regulation, or ordinance is used to apply standards that do not exist at all or do not exist with sufficient clarity so as to apprise people of their rights and the standards by which the government will make decisions, such application of an ordinance is "an unconstitutional delegation of legislative authority."[17] In short, an ordinance that is used to affect a person's rights but does not contain clear standards for compliance is unconstitutional and cannot be enforced.

---

[16] *Stucki v. Plavin*, 291 A.2d 508, 510 (Me. 1972).

[17] *See Kosalka v. Town of Georgetown*, 2000 ME 106, ¶ 17, 752 A.2d 183, 187.

Applying this framework, nowhere in Section 74-35 is a harbormaster provided authority to review and approve the design and location of a pier. Further, Section 74-35 does not contain any criteria or standards by which a harbormaster could evaluate the design and location of a pier. Rather, Section 74-35(c) contains the criteria that a person must satisfy before they can build their pier, and none speak to approval of the design and location by a harbormaster. Subsection (c) is the "blueprint" for an applicant to follow. The harbormaster may guide the applicant and facilitate the process and affirms that all regulatory approvals required in subsection (c) have been obtained, but the City's Harbormaster is provided no authority to exercise any discretion with respect to approving the design or location of a pier.

Any use of Section 74-35 to allow a harbormaster to approve or deny the design or location of a pier would constitute a "usurpation of a purely legislative function" and an unconstitutional delegation of authority because (1) such use would add a provision of Section 74-35 that does not exist and (2) because such use would leave applicants without any notice of their rights and would subject them to the mercy of a harbormaster's whim.[18]

b. A Complete Reading of Section 74-35 Shows That the Harbormaster Simply Guides or Facilitates or Signs Off That Other Regulatory Approvals Have Been Sought and Received

Looking at the plain language of Section 74-35, in the first two subsections -- (a) and (b) -- Section 74-35 does begin by talking about receiving permission from the harbormaster. (*See attached* Section 74-35 at UNE 67.) The assertion that a harbormaster must approve the design and location of a pier relies on those two subsections. But, those two subsections cannot be read by themselves. Moreover, those two subsections do not provide any information to an applicant about what they must do to obtain such permission and do not tell a harbormaster what they must evaluate to provide permission.

Remember that the ordinance must tell a person what they must do to obtain permission. It must provide the applicant with a guide so that they know what they must do to be able to build their pier. Those two subsections, however, do not provide any "guide which will enable those to whom the law is to be applied to reasonably determine their rights thereunder, and so that the determination of those rights will not be left to the purely arbitrary discretion of the administrator."[19] When an ordinance provides no criteria, no guide, the ordinance leaves the applicant uncertain of their rights and subject to inconsistent, vague, and ad hoc standards applied by the decision maker. The law forbids the enforcement of such an ordinance.

So, one must keep reading Section 74-35. When one does so, one sees that the next subsection, Section 74-35(c), tells an applicant what they must do to receive permission. Subsection (c)

[18] *See Kosalka v. Town of Georgetown*, 2000 ME 106, at ¶ 11; *Stucki v. Plavin*, 291 A.2d at 510.

[19] *Stucki v. Plavin*, 291 A.2d at 510.

provides the necessary guide. Specifically, subsection (c) begins by telling an applicant: "To obtain permission for any new wharf or pier, [you] must provide the following information."

And then in subsection (c)(1)-(10), Section 74-35 outlines what an applicant needs to do in order "to obtain permission." Specifically, subsection (c)(1)-(10) outlines the following requirements:

> (1) A formal boundary survey that has been documented at the Registry of Deeds.
>
> (2) A copy of the boundary survey showing the littoral zone, established by extending property lines seaward.
>
> (3) A location map from a portion of a USGS topographic map or coastal chart.
>
> (4) Distance to navigable channels or any federal navigation project.
>
> (5) Mean high- and low-water boundary.
>
> (6) A plan view on the drawing(s) that shows the location and dimensions of the applicant's structure(s) in relation to the applicant's property lines.
>
> (7) A typical cross section/side view of the applicant's structures on the drawing(s).
>
> (8) Evidence that owners of abutting properties have been notified of the applicant's intended project.
>
> (9) Evidence that the 1) Maine Historic Preservation Commission, 2) Aroostook Band of Micmac, 3) Passamaquoddy Tribe of Indians: Pleasant Point; Indian Township, 4) Houlton Band of Maliseet Indians, and 5) Penobscot Indian Nation have been notified of the applicant's intended project.
>
> (10) Completed applications to the Army Corps of Engineers, Department of Environmental Protection and Biddeford Code Enforcement. A regulatory permit from the Saco River Corridor Commission may also be required in some instances.

In short, subsection (c) and only subsection (c) tells an applicant what they must do to be able to build a pier. Nowhere in subsection (c) is there any standard or criteria that a person must meet with respect to the design or location of a pier and no standard or criteria that a harbormaster could apply to review, evaluate, and approve or deny the design and location of a pier.

Then, finally, in subsection (d), Section 74-35 provides that the harbormaster shall facilitate the process and that the harbormaster "shall be available to guide the applicant through the application process and finally, to sign off that all regulatory approvals have been obtained for construction."

c. *Section 74-35 Does Not Authorize a Harbormaster to Review and Evaluate the Design and Location of a Pier*

Nowhere within Section 74-35 is an applicant told that the harbormaster will review, evaluate, and approve or deny the design or location of their proposed pier. Nowhere is an applicant told how a

harbormaster would even begin to undertake such an evaluation. Entirely absent from Section 74-35 is any criteria that would guide a harbormaster who wanted to fulfill any responsibility to fairly and consistently review and evaluate the design and location of a pier. The absence of such criteria is very significant. The absence of such a guide for both the applicant and a harbormaster means that the ordinance does not and cannot authorize a harbormaster to conduct a review and evaluation of the design and location of a pier.

A public official cannot lawfully make up standards or rely on their own idea of "common sense" to determine a person's rights. Again, the City Council makes the law and a public official applies it. Making up standards that do not exist in an ordinance is unlawful. A person cannot lawfully be left uncertain of their rights and subjected to "the purely arbitrary discretion" of a public official. Again, if a public official makes up or applies standards that are not contained in an ordinance and a municipality allows it, that action usurps the legislative prerogative of the legislative body and would be "an unconstitutional delegation of legislative authority."

Again, nothing in Section 74-35 tells an applicant how they must build a pier or where they must locate it. There is no language in Section 74-35 that would guide them on any standard that would help them deduce how they would build a pier and where they could locate it. There is nothing, no reference to any criteria, that would guide a harbormaster as to how they should evaluate a pier's design or its location and how they would approve or deny any application to build a pier. Any attempt to use Section 74-35 to permit the harbormaster to evaluate a pier and its location would be unconstitutional and invalid. In fact, anybody who demands that Section 74-35 be used to authorize the harbormaster to evaluate, review, approve or deny a pier and its location demands that the Harbormaster and City engage in an unlawful act. The City Solicitor appropriately and correctly advised the Planning Board to not engage in such an illegal act. The majority of the Planning Board listened and appropriately followed the law.

d. The Harbormaster's Lack of Authority Is Intended

It turns out that the absence of any evaluative criteria for a harbormaster to apply is intentional. In other words, the City's Harbormaster is not intended to have the authority to evaluate and approve the design and location of a pier. As part of Attorney Center's explanation of Section 74-35 in his July 8, 2025 memorandum, he looked to the "legislative intent" -- the expressions of intent by the people who drafted Section 74-35 -- to confirm the meaning of the plain language of the ordinance

As Attorney Center noted in his memorandum, at an August 7, 2023 City Council Policy Committee meeting, Mr. Schafer, who was the Chair of the Harbor Commission at the time, drafted revisions to Section 74-35 for the City Council to consider and pass. Mr. Schafer appeared before the City Council's Policy Committee and explained his draft revisions of Section 74-35. During the meeting, Mr. Schafer was questioned by the Committee, including City Councilor Norman Belanger. Councilor Belanger asked Mr. Schafer if the harbormaster issues a permit or if a permit is issued. Mr. Schafer responded that the harbormaster does not issue a permit. At one time, Mr. Schafer stated in response to the question, "That is absolutely not the case. The harbormaster is nothing but a facilitator …."

In his memo, Attorney Center concluded:

> Construing the ordinance in its entirety and a review of the legislative (City Council) intent unequivocally evidences a clear intent defining the role of the harbormaster as a facilitator. An applicant for a new pier must, as a condition precedent, initially establish that items 1 through 10 are complete.

(*See* July 8, 2024 Memo at UNE 4.)

Apparently wishing to run or hide from his own words and his own work drafting the applicable version of Section 74-35, Mr. Schafer continues to insist that the harbormaster was required to have "reviewed [and] approved the location of the proposed pier" and must have done so before the Planning Board could act. Such a claim is contrary to the plain language of Section 74-35 as well as Mr. Schafer's own words before the Policy Committee.[20] There is in fact no factual or legal merit to Mr. Schafer's claim. Regardless of whether one thinks Section 74-35 should work the way it does, Section 74-35 places the harbormaster in the role of checking off that an applicant obtains approval from the Army Corps of Engineers, the Department of Environmental Protection, the Planning Board/Code Enforcement, and, if required, the Saco River Corridor Commission, all as required by Section 74-35(c), nothing more.[21] Therefore, in addition to the fact that harbormaster approval is not a prerequisite to Planning Board action, the harbormaster has no authority to review, evaluate, and approve or deny the design and location of a pier. Mr. Schafer's appeal has no merit and must be denied.

4. <u>The Planning Board Understood Who Filled the Harbormaster's Role at the Time of Its Vote</u>

Attorney Center concluded further that the act of signing off that all other regulatory approvals were sought and obtained is a ministerial act that could be assigned to another person. Mr. Schafer continues to claim that Attorney Center allowed the Planning Board to think that a harbormaster approved the pier, trying in vain to capitalize on a minor misstatement in the moment at the very beginning of the Planning Board's process that Attorney Center later corrected. Specifically, in his June 11, 2025 Memorandum to the Planning Board, Attorney Center informed the Planning Board as follows: "In this matter, the city appropriately delegated the task of the harbormaster facilitating an applicant request pursuant to the ordinance." (*See* June 11, 2025 Memorandum at UNE 1.) In the July 8, 2024 Memorandum that he referenced and attached to his June 11 memorandum, Attorney Center wrote, "The City may delegate the harbormaster tasks (facilitation of submission to AOC, DEP, etc.) and ensuing completeness, to a third party such as an independent engineer or firm." (*See* July 8, 2024 Memorandum at UNE 5.) Attached also to the June 11 Memorandum were

---

[20]During the July 16, 2025 Planning Board meeting, after Mr. Schafer declared that he took "exception" at Attorney Center's comment that the harbormaster was "nothing but a facilitator," Attorney Center seemed poised to play video of Mr. Schafer's explanations of Section 74-35 during the August 7, 2023 Policy Committee meeting. Mr. Schafer became sufficiently upset and confrontational that he was asked to sit down after he pointed his finger at Attorney Center and said, "You've tried like hell to keep rubbing my nose in it."

[21]It is important to note that nothing in Section 74-35 prevents an applicant from seeking the necessary approvals simultaneously. As Mr. Schafer understands, there really is no "one agency that overrides the other."

documents about the person who reviewed UNE's application to determine if the application contained the information required by Section 74-35(c). (*See* attachments to June 11 Memorandum at UNE 25-28.) Those documents identify the person as Wayne Duffett, a professional engineer with the engineering firm, TEC Associates. During the August 6, 2025 Planning Board meeting, Attorney Center addressed the claim that Mr. Duffett was only a "railroad engineer." Attorney Center made it clear that Mr. Duffett was an engineer and worked for an engineering firm with experience with waterfront projects. In other words, regardless of the fact that the Planning Board was required to act without any approval by a harbormaster, prior to their vote, the Planning Board had accurate information from Attorney Center about who performed the ministerial act required by Section 74-35 in place of the Biddeford Harbormaster.

5. The Absence of the NIST Application Did Not Render UNE's Site Plan Review Application Incomplete

Mr. Schafer provides no actual basis to claim that UNE's application before the Planning Board was incomplete. He relies only on his claim that a Planning Board member asked to see the NIST application and that UNE did not provide it. Mr. Schafer does not and cannot demonstrate that the NIST application was something that UNE had to submit as part of its site plan review application. The Planning Board cannot and does not require applicants to submit materials that are not required by its controlling ordinances. Further, Mr. Patoine, the Planning Board member who very early on in the process expressed an interest in seeing the NIST application, twice voted to approve UNE's application. In short, Mr. Schafer cannot demonstrate that the Planning Board decision "was contrary to specific provisions of the ordinance or contrary to the facts presented to the Planning Board." Therefore, this Board of Appeals must deny Mr. Schafer's appeal.

6. Conclusion

The appeal should be denied for the primary reason that John Schafer has no standing to bring an appeal. He is not an abutter, his property on Biddeford Pool is not directly or indirectly affected by a pier on the Saco River, and he cannot demonstrate any particularized injury personally that is distinct from that of the general public.

Even if he has standing, Mr. Schafer cannot demonstrate that the Planning Board could not do its job because a harbormaster did not approve the design and location of the proposed pier. He cannot succeed because there is no provision in the City's Ordinances that supports Mr. Schafer's claim that a harbormaster had to approve the design and location of a pier before the Planning Board could approve UNE's application to the Planning Board. Further, there is no support for the claim that a harbormaster is authorized to approve or deny the design and location of a pier. Section 74-35 simply does not provide any criteria by which a harbormaster could undertake such a task, and the law forbids the ad hoc creation of any criteria that would guide such a task.

Finally, he cannot point to any Planning Board ordinance criteria that required the submission the NIST application or the approval of the pier by the Biddeford harbormaster. In short, Mr. Schafer cannot establish that the Planning Board's decision "was contrary to specific provisions of the

ordinance or contrary to the facts presented to the Planning Board." Therefore, the appeal must be denied.

Sincerely,

Ronald W. Schneider, Jr., Esq.

cc: Lisa Gilbreath, Esq.

CONFIDENTIAL
MEMORANDUM

To: Biddeford Planning Board

From: Harry B. Center, II, Esq., City Solicitor

Date: June 11, 2025

RE: UNE Pier Application

I am writing to supplement my memorandum dated June 9, 2025 regarding the pending University of New England pier application. Citizens have raised the issue regarding TEC Associates review of the initial application pursuant to the Harbor ordinance (Ordinance 74-35). Again, I caution the planning board that its review of this matter must be limited to the applicable city ordinances. There is not a provision within Article 14 §15(C), in the Shoreland zoning ordinance or site plan review, which authorizes the planning board to review the permission requirement in the city's Harbor ordinance.

Attached please find my memorandum dated July 8, 2024, which was sent to the former city manager. In that memorandum, I address the role of the harbormaster, specifically citing the city council's policy committee meeting of August 7, 2023, during which the current ordinance was presented and ultimately adopted by the council. Because the permission required from the harbormaster is not an opportunity to approve or deny an application for a pier, and the harbormaster role is "nothing but a facilitator," I provided a legal opinion that concluded an engineering firm could be delegated the task of reviewing the pier application and determining whether the application was complete. As stated in the memorandum, it is common for the City of Biddeford, including this planning board, to engage outside experts, such as traffic engineers, environmental engineers, and individuals to perform soil or water tests. In this matter, the city appropriately delegated the task of the harbormaster facilitating an applicant request pursuant to the ordinance. Lastly, I note that should there have been any interested party who would have had standing, the time for any judicial review of the city's activity in July and August 2024 has long passed.

CONFIDENTIAL
MEMORANDUM

To: City Manager James Bennett

From: Harry B. Center, II, Esq., City Solicitor

Date: July 8, 2024

RE: Opinion and Interpretation of City Code 74-35

You have asked me to provide you with my interpretation and legal opinion regarding City of Biddeford Code of Ordinances Sec. 74-35, which relates to construction of marine piers. This code provision has become the subject of interpretation as a result of the University of New England's recent application for a marine pier. This current ordinance provision was recently amended in September, 2023. An August 9, 2023 policy committee meeting approved a proposed draft ordinance that was submitted by Chair of the Harbor Commission, John Schafer. Set forth below is the full section of the current ordinance:

> *Sec. 74-35. Construction of wharf, pier or landing regulated.*
>
> *[Ord. of 4-20-1993, S 26-29; Ord. No. 2007.11, 3-6-2007; amended 2-19-2013 by Ord. No. 2013.7; 9-19-2023 by Ord. No. 2023.1021*

(a) *No additions, alterations, new construction or/or changes to an existing wharf, pier or landing shall be made without prior permission of the Harbormaster.*

(b) *Permission for the construction of any new wharf or pier within the jurisdictional limits of the City shall not be granted without approval of the Harbormaster, along with federal, state, and local governing authorities.*

(c) *To obtain permission for any new wharf or pier, the applicant must provide the following information:*

(1) *A formal boundary survey that has been documented at the Registry of Deeds.*

(2) *A copy of the boundary survey showing the littoral zone, established by extending property lines seaward.*

(3) *A location map from a portion of a USGS topographic map or coastal chart.*

(4) *Distance to navigable channels or any federal navigation project.*

(5) *Mean high- and low-water boundary.*

(6) *A plan view on the drawing(s) that shows the location and dimensions of the applicant's structure(s) in relation to the applicant's property lines.*

(7) *A typical cross section/side view of the applicant's structures on the drawing(s).*

(8) *Evidence that owners of abutting properties have been notified of the applicant's intended project.*

(9) *Evidence that the 1) Maine Historic Preservation Commission, 2) Aroostook Band of Micmac, 3) Passamaquoddy Tribe of Indians: Pleasant Point; Indian Township, 4) Houlton Band of Maliseet Indians, and 5) Penobscot Indian Nation have been notified of the applicant's intended project.*

(10) *Completed applications to the Army Corps of Engineers, Department of Environmental Protection and Biddeford Code Enforcement. A regulatory permit from the Saco River Corridor Commission may also be required in some instances.*

(d) *The process to obtain permission for any new wharf or pier shall be facilitated by the Harbormaster. Initially, the Harbormaster shall be available to guide the applicant through the application process and finally, to sign off that all regulatory approvals have been obtained for construction.*

I have previously provided you with opinions relating to allegations regarding the current City of Biddeford Harbormaster's prejudicial and biased statements regarding the potential University of New England pier. I have opined those statements made by the current harbormaster prior to any formal application from UNE, such as "I will never approve the pier application in that location," constituted bias and a violation of the University's due process rights. You removed the current harbormaster from consideration of the UNE marine pier application. While the City determines who, on behalf of the City, will function in the role as harbormaster regarding the UNE marine pier application, you have asked me to review and provide you with a legal opinion as to what conditions and criteria would be applied to the marine pier application on behalf of the City, pursuant to the aforementioned code provisions.

The interpretation of the provisions of a municipal ordinance is a question of law. *Rockland Plaza Realty Corporation v. City of Rockland, 2001 Me. 81.* Numerous Maine Supreme Court Opinions provide that ordinance provisions should be given their plain and ordinary meaning, and any interpretation of ordinance language should be done in a manner to avoid absurd, illogical, or inconsistent results. *Wright v. Town of Kennebunkport, 1998 Me. 184.* There is a legal presumption favoring the validity of municipal ordinances and a municipal ordinance's constitutionality and reasonableness will be presumed. *Gabriel v. Town of Old Orchard Beach, 390 A.2d 1065 (Me. 1978).* In construing and interpreting municipal ordinances, a reviewing Court may review the purpose of the enactors to determine the intent of the ordinance. *Natale v. Kennebunkport Board of Zoning Appeals, 363 A.2d 1372 (Me. 1976).* Applying these legal principles regarding ordinance interpretation, I can provide you with the following opinions.

Subsection (a) and (b) of Sec. 74-35 expressly provide that any new construction of a pier, within the jurisdictional limits of the City of Biddeford, requires permission of the harbormaster. The issue is what criteria the harbormaster applies when determining whether to "grant permission." On its face, it would appear that the harbormaster has the authority to "deny" permission of a pier application. However, applying the aforementioned legal principles when reviewing the ordinance at (c) (1-10), it is my opinion that the role of a harbormaster granting permission is limited to a review of the information set forth in items 1-10. The harbormaster's review is limited to inspection of the items for completeness, then upon the applicant's receipt of all other agency's approval, permission is then granted to the applicant to proceed to the City Planning Board and Code Office.

The ordinance provides at subsection (d), that the harbormaster shall ***guide*** the applicant through the application process, and ***"sign off that all regulatory approvals have been obtained for construction."*** In my opinion, a plain and ordinary interpretation of the entire ordinance set forth in Section 74-35 leads to the conclusion that the harbormaster's role in granting permission is limited to an initial determination that all of the items set forth in (c) (1-10) have been completed and submitted to the appropriate governing bodies, and then a subsequent determination as to whether those agencies have granted approval.

When interpreting ordinance provisions, the court looks to the legislative intent of the enacting body. A review of the intent of the City Policy Committee and ultimately the City Council's intent supports my opinions regarding interpretation of the ordinance. Ordinance 74–35 was initially reviewed by the city Council subcommittee, the Policy Committee. At a public meeting on August 7, 2023, chairperson of the Harbor Commission, John Schaeffer, presented the proposed ordinance. During that meeting, City Counselor, Norman Belanger asked Mr. Schaeffer, whether the harbormaster was the person who issued a permit for a new pier. Mr. Schaeffer expressly responded, *"that is absolutely not the case."* Mr. Schaeffer further explained that the harbormaster is *"nothing but a facilitator"*. This legislative intent, combined with reading the ordinance as a whole, leads to the legal conclusion that the harbor-master's role is to guide an applicant through the process, and determine whether the items in subsection (c) (1-10), are complete and ultimately approved by the other agencies.

Construing the ordinance in its entirety and a review of the legislative (City Council) intent unequivocally evidences a clear intent defining the role of the harbormaster as a facilitator. An applicant for a new pier must, as a condition precedent, initially establish that items 1 through 10 are complete. Upon return to the harbormaster following completion of those items and receipt of approval from the regulatory bodies, the harbormaster, then ***"signs off"***. The express use of the term ***"signs off"*** establishes the role of the harbormaster in the process.

It is further my opinion that review of items 1 through 10 are not exclusively delegated to the appointed harbormaster. Facilitation and review of those items may be delegated to a person or entity with technical expertise, such as an engineering firm. It is common for the City to engage independent experts to review permit applications such as traffic engineers, environmental engineers and others depending on the nature of the approval sought. Because the review process is not the final approval by the City, such delegation is permissible. It is important to note that the harbormaster, the code enforcement officer and other individuals in city offices, such as

planners and assistant code personnel, are generally not licensed, professional engineers, nor do their approvals act as performing those expert reviews. The Planning Board, Code Office and other City employees rely on submissions from the applicant such as a stamped professional engineer's approval on plans submitted, structural plans, and other highly technical information that is beyond the scope of city officials. The city does not want to be held liable for the soundness of any project, nor the technical approvals of those projects. City officials rely on the applicant's expert's submitted plans and/or approvals from other regulatory bodies such as the Army Corp of Engineers and the State Department of Environmental Protection in the case of marine piers.

It is my legal opinion that the harbormaster does not issue or approve a permit to construct a marine pier. Pursuant to the ordinance, the harbormaster acts as a facilitator to ensure the prerequisites have been submitted, then once all those approvals are obtained then performs the ministerial act of signing off/granting permission to proceed to the City Planning Board and Code Office. The City Shoreland Zoning Ordinance, as well as the duties of the code enforcement officer to issue permits for structures, provide the city with the necessary final review of the process and protect the City's interests. The harbormaster role pursuant to the ordinance is limited to being a facilitator of the application and ultimately signing off, moving the application forward to the Planning Board and Code Office.

CONCLUSION

1. Reading the ordinance as a whole and applying legal principles for interpretation of the ordinance, the harbormasters role is as a facilitator to ensure that an applicant for a marine pier has completed items in section (c) 1-10 as a condition precedent.
2. The City may delegate the harbormaster tasks (facilitation of submission to AOC, DEP, etc.) and ensuing completeness, to a third party such as an independent engineer or firm.
3. Once an applicant has received information that includes APPROVALS from the agencies that have expertise in reviewing such projects, the harbormaster performs that ministerial task of granting permission to the applicant or "signs off", pursuant to section (d) of the ordinance.
4. Once the harbormaster signs off on the marine pier application, the Planning Board and Code office review the project and ultimately decide whether grant approval and issue the appropriate permits, pursuant to the City's Shoreland Zoning Ordinance and Floodplain Management Ordinance.

N:\Shared\HBC-WIP\Biddeford\UNE Marine Pier Issue\MEMORANDUM to Jim Bennett re Sec 74 35.docx

CONFIDENTIAL
MEMORANDUM

To: Biddeford Planning Board

From: Harry B. Center, II, Esq., City Solicitor

Date: June 9, 2025

RE: UNE Pier Application

The following sets forth my opinions and responses to the various questions raised during the initial planning board meeting regarding the University of New England pier application. This Memorandum also addresses questions from the planning department and is in response to comments made by the public. Some responses are set forth by reference to the attached prior documentation, opinion memorandum, and correspondence.

I. SCOPE OF PLANNING BOARD REVIEW

Initially as City Attorney, I must advise the planning board as to the criteria for legal review of this application. This project falls within the jurisdiction of the city's shoreland zoning ordinance. Pursuant to the city land use ordinances, this project is also subject to site plan review. Those ordinances provide the planning board with jurisdiction to review and vote on this project.

The planning board's review of the UNE pier application is pursuant to Article XIV of the city's, shoreland zoning ordinance Section 15 (C). That ordinance provision, attached hereto, provides the only basis for planning review and subsequent granting of approval or denial. Just last week, the Maine Supreme Judicial Court in *Newfield Sand v. Town of Newfield, 2025 ME 45,* confirmed the well-established legal authority relating to a planning board's application of ordinance provisions when making any determination to grant or deny an application. The court stated, that any conditions imposed by a municipal planning board must be authorized by the enabling ordinance and defined clearly when a permit is considered, so that the applicant understands what is required, *Newfield Sand v. Town of Newfield* citing *Cobbossee Development Group v. Town of Winthrop 585 A.2d 190 (ME. 1981).* Permit requirements and ordinances lacking specificity are vulnerable to challenge for vagueness or excessive delegation of the municipalities legislative authority *Doane v. Department of Health and Human Services 2021 ME 28.*

At the May 21, 2025 initial planning board meeting, much public comment related to the proposed location of the pier, the current of the river in the area where the proposed pier would be located, the depth of the water at that location and other issues, including, but not limited to moorings in the vicinity of the pier location. None of those concerns raised are within the jurisdiction of the planning board pursuant to Article XIV, §15(C.)

Regarding the issue of the planning board's jurisdiction, and what standards the planning board may apply, considering whether or not to approve this project, I advise the planning board to also rely upon recommendations from the City of Biddeford planning department staff. I have asked staff to review whether I am missing any provisions that would allow the planning board to consider water depth at the location of the proposed pier, impact of the proposed pier on navigation, impact of the proposed pier on the current of the river or any of the other many navigation and waterway related concerns, raised by many of the speakers at the public hearing. To date, I have not been advised of any such provisions are within the planning board review process.

II. REMOVAL OF CURRENT HARBORMASTER FROM UNE PIER PROCESS

Attached is a memorandum that I drafted for the former city manager on May 15, 2024 regarding the UNE pier application and issues regarding the Biddeford Harbormaster and the Biddeford Harbor commission. That memorandum is titled "confidential" because it contained my legal advice to the city manager regarding numerous issues involved at that time. A review of the attached memorandum starting with the "issue" section provides background. You may note that the University of New England is arguing that the late, former harbormaster actually gave his approval verbally for the current requested site.[1] Please review the memorandum, as it explains the legal basis for why the harbormaster's role in this process was changed as well as the legal basis for removing current Harbor commission from the city's review process.

Enclosed, please find a memorandum from the former city manager to the Mayor, City Council, and the University of New England, dated May 22, 2024. In that memorandum, the city's action relating to the pier was set forth in writing. Additionally, I attach a letter dated May 22, 2024 from the former city manager to the current harbormaster which advised the current harbormaster that he would not be handling any review or approval of the UNE project and the basis for that decision.

III. HARBORMASTER PRO TEM PRIOR PERMISSION

Enclosed as a July 22, 2024 letter (I do not have a signed copy) from an independent engineering, firm, TEC Associates addressed to the city, outlining the fee and scope of project for TEC Associates to act as a harbormaster pro tem. The harbormaster's role in reviewing pier applications pursuant to city code Section 74-35, is limited to the Harbormaster being "nothing but a facilitator."[2] This engineering firm reviewed the UNE application in the role of Harbormaster Pro Tem pursuant to the city ordinance. On August 19, 2024, the city of Biddeford was provided notice that the application was complete and in the role of temporary harbormaster TEC Associates granted permission pursuant to the ordinance. The sole legal basis for a harbormaster to approve or deny a pier application is to **facilitate and guide the applicant's application process and ensure that the application is complete.** The city's harbor ordinance has no legal standards in place to review a pier application for whether the water depth is appropriate, there is an impact on current navigation, or other arguments made by the public at the May 21, 2025 public hearing. The same legal principles that limit a planning board's ability to review an application, also apply to

[1] The City has rejected that position.

[2] Quotation from former Harbor Commission Chair John Schaefer to the City Council policy committee on August 7, 2023, explaining the intent in drafting code Provision 74-35.

any review by a harbormaster. A citizen applying to their government for approval is constitutionally entitled to be made aware of the legal standards, and only those legal standards validly adopted by the governmental body may be applied to appeal, to approve, or deny a given application. I also attach a memorandum I sent to the former city manager on July 8, 2024, explaining the legal support for the principles, as well as the limitations of the harbormaster's review of a pier application.

IV. POTENTIAL PLANNING BOARD "DENIAL WITHOUT PREJUDICE"

I have been asked whether a member of the planning board may make a motion to "deny without prejudice" regarding the pier application. Any such denial must be based upon a standard that is applicable on this issue. The planning board may not arbitrarily deny a project based upon a desire to simply postpone it. There is no specific provision that I could find to authorize a "denial without prejudice." For guidance, a review of the zoning board of appeals ordinance provides that an applicant who has been denied may make another application two years after that denial or make a substantial change in the request. I would be very concerned about my ability to support a "denial without prejudice" if it is simply intended to delay the project and not based upon any of the standards set forth in the shoreland zoning ordinance.

The planning board enabling ordinance states that it must adopt Roberts Rules of Order. Under Roberts Rules a motion to table either to a date certain or indefinitely may be made. However, I caution you that such a motion without a specific Basis, i.e., needs more information on a subject that is within the planning board jurisdiction, an appeal could be taken from an arbitrary motion to table. I see no legal support for a motion to deny, without prejudice. The planning board may choose to grant the permit for the pier, deny it, or move to table it. Any such final action will first be appealed to the zoning board of appeals, then to the courts.

V. MOORINGS

You have asked me for advice regarding the issue of the placement of moorings in the area where the proposed pier would be located. The planning board has no jurisdiction regarding the issue of moorings. Similar to the analogy of a property ownership dispute between an applicant and another party, the planning board does not have jurisdiction over the legal issues of title or ownership. There are no provisions in the Shoreland zoning ordinance which the planning board would use to review the issue of the impact on moorings when a pier is constructed. Arguments by the public about ownership of the moorings, relocation of the moorings, and other concerns are not subject to the planning board review of this project.

Attached is a copy of the city's mooring permit application. Within that document, it is stated that the city may move the location of a mooring at the city's discretion at any time. Further, while it is not necessary for the planning board to consider all of these issues, a mooring permit is issued for only one year, and does not give the permit holder a legal ownership in any rights in the waterway. Even if the mooring issue was within the planning board's jurisdiction, the planning board would not require a pier, dock, or wharf applicant to compensate mooring permitees who may have moorings adjacent to a potentially constructed pier, dock, or wharf. This issue is not within the scope of the planning boards review.

CITY OF BIDDEFORD
SHORELAND ZONING
ORDINANCE
ARTICLE XIV
SECTION 15(C)

g. A vegetated buffer area is established within 25 feet, horizontal distance, of the normal high-water line of a water body, tributary stream, or upland edge of a wetland when a natural buffer area does not exist. The buffer area must meet the following characteristics:

i. The buffer must include shrubs and other woody and herbaceous vegetation. Where natural ground cover is lacking, the area must be supplemented with leaf or bark mulch;

ii. Vegetation plantings must be in quantities sufficient to retard erosion and provide for effective infiltration of stormwater runoff;

iii. Only native species may be used to establish the buffer area;

iv. A minimum buffer width of 15 feet, horizontal distance, is required, measured perpendicularly to the normal high-water line or upland edge of a wetland;

v. A footpath not to exceed the standards in Section 15P2a, may traverse the buffer.

6. Notwithstanding the requirements stated above, stairways or similar structures may be allowed with a permit from the Code Enforcement Officer, to provide shoreline access in areas of steep slopes or unstable soils provided; that the structure is limited to a maximum of four feet in width; that the structure does not extend below or over the normal high-water line of a water body or upland edge of a wetland, (unless permitted by the Department of Environmental Protection pursuant to the Natural Resources Protection Act, 38 M.R.S.A. § 480-C); and that the applicant demonstrates that no reasonable access alternative exists on the property.

C. Piers, docks, wharfs, bridges and other structures and uses extending over or below the normal high-water line of a water body or within a wetland.
[Amended 2-2-2010 by Ord. No. 2009.98; 10-18-2016 by Ord. No. 2016.69]

1. Except as provided in Section 15C11 and Section 15X7, no more than one pier, dock, wharf or similar structure extending or located below the normal high-water line of a water body or within a wetland is allowed on a single residential lot; except that when a single lot contains at least twice the minimum shore frontage as specified in Section 15A, a second structure may be allowed and may remain as long as the lot is not further divided.

2. Access from shore shall be developed on soils appropriate for such use and constructed so as to control erosion.

3. The location shall not interfere with existing developed or natural beach areas.

4. The facility shall be located so as to minimize adverse effects on fisheries.

5. The facility shall be no larger in dimension than necessary to carry on the activity and be consistent with the surrounding character and uses of the area. A temporary pier, dock, or wharf in nontidal waters shall not be wider that six feet for noncommercial uses.

6. No new structure shall be built on, over or abutting a pier, wharf, dock or other structure extending beyond the normal high-water line of a water body or within a wetland unless the structure requires direct access to the water body or wetland as an operational necessity.

7. New permanent piers and docks on nontidal waters shall not be permitted unless it is clearly demonstrated to the Planning Board that a temporary pier or dock is not feasible, and a permit has been obtained from the Department of Environmental Protection, pursuant to the Natural Resources Protection Act.

8. No existing structures built on, over or abutting a pier, dock, wharf or other structure extending beyond the normal high-water line of a water body or within a wetland shall be converted to residential dwelling units in any district.

9. Except in the General Development District, structures built on, over or abutting a pier, wharf, dock or other structure extending beyond the normal high-water line of a water body or within a

wetland shall not exceed 20 feet in height above the pier, wharf, dock or other structure.

NOTE: Permanent structures projecting into or over water bodies shall require a permit from the Department of Environmental Protection pursuant to the Natural Resources Protection Act, Title 38 M.R.S.A., Section 480-C.

10. Vegetation may be removed in excess of the standards in Section 15P of this ordinance in order to conduct shoreline stabilization of an eroding shoreline, provided that a permit is obtained from the Planning Board. Construction equipment must access the shoreline by barge when feasible as determined by the Planning Board.

    a. When necessary, the removal of trees and other vegetation to allow for construction equipment access to the stabilization site via land must be limited to no more than 12 feet in width. When the stabilization project is complete, the construction equipment accessway must be restored.

    b. Revegetation must occur in accordance with Section 15S.

    NOTE: A permit pursuant to the Natural Resource Protection Act is required from the Department of Environmental Protection for shoreline stabilization activities.

11. A deck over a river may be exempted from the shoreland setback requirements if it is part of a downtown revitalization project that is defined in a project plan approved by the legislative body of the municipality, and may include the revitalization of structures formerly used as mills that do not meet the structure setback requirements, if the deck meets the following requirements:

    a. The total deck area attached to the structure does not exceed 700 square feet;

    b. The deck is cantilevered over a segment of a river that is located within the boundaries of the downtown revitalization project;

    c. The deck is attached to or accessory to an allowed commercial use in a structure that was constructed prior to 1971 and is located within the downtown revitalization project;

    d. The construction of the deck complies with all other applicable standards, except the shoreline setback requirements in Section 15B; and

    e. The construction of the deck complies with all other state and federal laws.

D. Campgrounds. Campgrounds shall conform to the minimum requirements imposed under state licensing procedures and the following:

    1. Campgrounds shall contain a minimum of 5,000 square feet of land, not including roads and driveways, for each site. Land supporting wetland vegetation, and land below the normal high-water line of a water body shall not be included in calculating land area per site.

    2. The areas intended for placement of a recreational vehicle, tent or shelter, and utility and service buildings shall be set back a minimum of 100 feet, horizontal distance, from the normal high-water line of a great pond classified GPA or a river flowing to a great pond classified GPA, and 75 feet, horizontal distance, from the normal high-water line of other water bodies, tributary streams, or the upland edge of a wetland.
    [Amended 2-2-2010 by Ord. No. 2009.98]

E. Individual private campsites. Individual, private campsites not associated with campgrounds are allowed, provided the following conditions are met:
[Amended 2-2-2010 by Ord. No. 2009.98]

    1. One campsite per lot existing on the effective date of this ordinance, or 30,000 square feet of lot area within the Shoreland Zone, whichever is less, may be permitted.

MAY 15, 2024
LEGAL OPINION FROM CITY ATTORNEY TO CITY MANAGER REGARDING VIOLATIONS OF DUE PROCESS BY HARBORMASTER AND HARBOR COMMISSION

CONFIDENTIAL
MEMORANDUM

To: City Manager James Bennett

From: City Attorney Harry B. Center, II, Esq.

Date: May 15, 2024

RE: UNE Pier Application/Due Process Issues

BACKGROUND

Starting in 2015, The University of New England (hereinafter "UNE") has researched and undertaken preliminary steps to construct a marine pier/wharf appurtenant to its campus in the City of Biddeford (UNE refers to this as the Girard Marine Science Center Pier-hereinafter "pier"). The pier would be constructed within the City's jurisdiction of the Saco River. Pursuant to City of Biddeford Code of Ordinances (hereinafter "Code") Section 74-35 (a), any new construction of a pier/wharf must be approved by the City of Biddeford Harbormaster. Pursuant to the Charter of the City of Biddeford (hereinafter "Charter"), Article X, Section 7, the position of Harbormaster is created. Code provisions 74-46 through 74-51 set forth the authority, duties, qualifications and compensation of the Biddeford Harbormaster.

Pursuant to the City Charter, Article IV, the City Manager is the chief administrator of the City and has complete administrative authority over all City of Biddeford personnel, including the Harbormaster. That authority includes the power to direct, supervise, discipline all city department heads and officers and to follow and implement laws of the Federal Government, State of Maine and the Charter and Code provisions of the City of Biddeford.

The Harbormaster is a municipal government official, who must follow all Federal and State Constitutional provisions as well as the Charter and Code. A party aggrieved by a decision of the Harbormaster may appeal to the City's Harbor Commission, which is a Municipal body, established pursuant to the Code Section 74-61. Pursuant to Section 74-63, appeals from parties aggrieved by a decision of the Harbor Master are before the Harbor Commission.

ISSUE

In 2015 UNE initially approached the City with a plan/site map prepared by Baker Design Consultants, which set forth nine potential locations for the pier. UNE contends that at a site walk in August 2015 former Harbormaster Marshall Alexander verbally approved or accepted a location known as Site #7 for the pier. This is a disputed issue of fact. In my opinion, notwithstanding the Code provision which provides that the Harbormaster will facilitate and

guide any applicant through the application process (Code 74-35(d)), because UNE has not formally applied for approval of the pier, no formal municipal decision has been made. Due to funding delays and the pandemic and such, UNE never moved forward with a formal request to the Harbormaster seeking approval to construct the pier at Site #7. In the Fall of 2023, UNE contacted the current Harbormaster Paul Laverriere, to move forward on Site #7.

In early 2024 City officials received complaints from representatives of UNE regarding the Harbormaster Paul Laverriere's conduct in his capacity as Harbormaster as it relates to the proposed pier. Note that I do not call this a " pending application for a permit" as UNE has not yet formally submitted an application for the pier. UNE alleges that the City's Harbormaster, Paul Laverriere, has made numerous statements evidencing bias against the UNE- which is a factual dispute. More importantly, UNE alleges that Harbormaster Laverriere has prejudged the potential pier application, and he has publicly stated that he is going to deny or refuse to issue a permit to UNE for a pier at Site #7. This allegation is not subject to dispute.

Chair of the Harbor Commission, John Schafer, sent email correspondence dated February 25, 2024, to the entire Harbor Commission, the Mayor, yourself and the entire City Council with "cc" to a variety of citizens. In that email, Chair Schafer states that a dispute exists between UNE and Biddeford over the design and location of the subject pier. Further that email contained the minutes of a February 21, 2024 Joint Harbor and Shellfish Meeting. The minutes state ***"..., Paul has denied approval of the UNE pier design."*** The correspondence also states that UNE is threatening possible litigation. It is important to note that any "litigation" brought by UNE would be an administrative, appellate review of its Constitutional rights and not any type of litigation seeking money damages from the City. UNE has every right to seek judicial review of any denial of a permit by a governmental entity and should not be penalized or impugned for asserting its Constitutional rights.

Additional complaints by UNE against the Harbormaster are that the Harbormaster has unilaterally and in an ex parte manner advocated to other regulatory bodies to deny the UNE permit for a pier at Site #7. It was entirely improper for the Harbor Commission and its Chair to discuss a potential application for a permit, without notice to the applicant. UNE also alleges that the Harbormaster has contacted the Army Corp of Engineers (which also must approve any final pier plan), indicating that his is or will deny the application and he has urged the ACOE to deny the permit. In my opinion, all of these actions constitute a violation of UNE's due process rights and expose the City to losing any judicial appeal of a denial of a permit for Site #7, irrespective of the potential merits of such denial.

LEGAL CONCLUSIONS & OPINIONS

I have reviewed the City Charter, Code and applicable case law. Based on that research, I have opinions and advice to the City regarding the potential application by UNE for a permit to construct a pier at Site #7.

The public emails which state that the Harbormaster has denied a permit that has not been formally submitted violate the applicant, UNE's due process rights. The due process clauses of the Maine and federal Constitutions guarantee due process before a government entity deprives

any person of a property right. *Kirkpatrick v. City of Bangor*, 1999 ME 73, ¶ 13, 728 A.2d 1268; *see also* U.S. Const. amend. XIV, § 1; Me. Const. art. I, § 6–A. The pier application is a constitutionally protected property right of UNE.

Persons who come before an administrative board are entitled to a fair and unbiased hearing. *Fitanides v. City of Saco*, 2015 ME 32, ¶ 22, 113 A.3d 1088; *Gorham v. Town of Cape Elizabeth*, 625 A.2d 898, 902 (Me. 1993). An administrative hearing officer "enjoys a presumption of honesty and integrity, which is only rebutted by a showing of some substantial countervailing reason to conclude that a decisionmaker is actually biased with respect to factual issues being adjudicated." *Mr. & Mrs. V. v. York Sch. Dist.*, 434 F.Supp.2d 5, 12–13 (D. Me. 2006).

Statements by the Harbormaster that UNE"s application is not "common sense", made outside of any noticed, formal proceeding are in violation of due process. Those statements would likely be found by a reviewing court to constitute bias. The Harbormaster acted unprofessionally when he told the ACOE to deny the UNE permit and by informing the ACOE that he had already denied the permit.

Comments by a municipal official at municipal proceedings without the applicant being notified nor present create a perception of bias, violate due process and raise questions about a municipality's willingness to consider the contentions of its citizens in a fair and responsible way. UNE has the right to protect its property interests, including its appeals to a neutral, unbiased Harbor Commission or Court. *See Fitanides v. City of Saco*, 2004 ME 32, ¶ 36, 843. Further evidence of bias is set forth in the Harbor Commission Chair's email which references UNE's potential threatened litigation. The exercise of appellate rights is absolutely proper and should not be raised at any level of review.

It is my opinion that the City of Biddeford should engage an independent Harbormaster to review and determine the UNE pier application. This insulates the City from the time and cost of a lengthy appeal of what has already been deemed a 'denial' by the current Harbormaster. Such 'denial' has been illicitly approved by the Harbor Commission. I do not believe I would successfully defend either a denial by the Harbormaster or a review by the current Harbor Commission.

Should there be an appeal from the independent Harbormaster's decision, it will need to be presented to a City of Biddeford appellate body, separate and distinct from the current Harbor Commission, for the reasons stated herein.

HARBORMASTER RIGHTS

The current Harbormaster is a governmental employee who has his own Constitutionally protected due process rights in his employment as Harbormaster. It is my opinion that none of those rights are impugned as there is no reduction in pay or benefits, nor is his position in any way diminished. The City Manager is making a decision based on legal advice, to proactively prevent lengthy and very costly appellate review of a pier application that has irrefutably been

the subject of numerous violations of procedural due process. It is my opinion that the current Harbormaster has no right to review the City's decision to have UNE's permit reviewed by an independent Harbormaster.

EXECUTIVE SUMMARY

- There is no factual issue that the City has tainted the pending pier application by UNE, based on the February 25, 2024, Harbor Commission Chair email and the February 21, 2024, Harbor Commission minutes. Evidence of bias, violations of due process and general unfairness are established in the record.

- The decision to have an independent Harbormaster determine the UNE pier permit application is solely within the discretion of the City Manager, based on opinions from the City Solicitor and the Harbormaster has no appellate rights or right to review that decision.

- Should UNE choose to appeal any decision by the independent Harbormaster, a new appellate body should be created as the current Harbor Commission has tainted its ability to independently review any decisions on the UNE pier application.

N:\Shared\HBC WIP\Biddeford\UNE Marine Pier Issue\MEMORANDUM docx

MEMORANDUM FROM CITY MANAGER TO CITY OFFICIALS EXPLAINING DUE PROCESS VIOLATION ISSUES

City of Biddeford, Maine

The Office of
City Manager
James A. Bennett
Email: jbennett@biddefordmaine.org

MEMORANDUM

TO:	**Honorable Mayor Grohman** **Honorable City Council** **Biddeford Harbor Commission** **University of New England**
FROM:	James A. Bennett, City Manager
DATE:	May 22, 2024
RE:	**Administrative Hearing Authority for Anticipated Girard Marine Science Center Pier**

After an extensive review of information and consultation with the City Attorney, I have informed the Harbormaster that I am removing him as the Administrative Hearing Authority for the anticipated application for the above mentioned project. Included within this memo is the rationale for my decision. I want to make it clear from the onset that I have not found the Harbormaster to have malice or intention in his actions. Further, my decision should not be considered disciplinary in nature.

It is my responsibility to ensure all appointed officials, employees and hired agents of the City perform to the highest of standards. In this matter, the process must protect the constitutional property rights of all, including the applicant. Further the applicants are entitled to a fair and unbiased hearing. Without taking this action, I have concluded that those standards would not be achieved.

The City Code directs the Harbormaster to facilitate and guide any applicant through the application process (Code 74-35(d)). Since the UNE has not formally submitted an actual application, the interactions between the applicant and the Harbormaster is governed by this section of the City Code. On the surface, this does not raise any concerns.

Examination of the actual activities of the Harbormaster once the applicant has indicated a difference of opinion on the preferred site raises the concerns. Examination of known factual information has led me to conclude that his actions were beyond the scope required by City Code 74-35(d). I further have concluded that an independent body would determine that the Harbormaster had moved into his role as the hearing authority prior to an application having been filed.

Without going into the complete analysis, I will share some of the factual information that has influenced my decision. In public settings, the Harbormaster has made it clear he would not consider UNE's preferred choice and would not grant a permit for that site. It is generally accepted that he has been informally in contact with other reviewing agencies advocating for his preferred site. At public meeting(s) he attended, it was reported by municipal officials that the Harbormaster had denied UNE's application. No application had been filed and he did not correct the public record. He has also participated in public discussions with the Harbor Commission (the actual appellant board for any aggrieved applicant before the Harbormaster) regarding the pending application and his rationale for his

decision. He has referred to UNE's 'application' as lacking 'common sense' publicly and outside of any noticed, formal hearing.

Recent Maine court decisions were helpful for my review. Having the public record misrepresent a denial of a permit even before an actual application, is a denial of the applicants due process rights. In *Kirkpatrick vs City of Bangor,* 1999, the court concluded that denying due process rights within both the U.S. and Maine Constitutions is equivalent to denying a property right.

Further, an administrative hearing officer (which the Harbormaster is when considering formal applications) "enjoys a presumption of honesty and integrity, which is only rebutted by showing of some substantial countervailing reason to conclude that a decision maker is actual biased with respect to factual issue being adjudicated" *Mr. & Mrs. V. vs York School District,* 2006. The undisputed facts above, in my opinion, has tarnished the presumption provided by the law.

In addition, I will be advising, with the assistance of the City Attorney, the Harbor Commission of the difficulty in them hearing any potential appeals on this matter. Specifically, comments by municipal officials at a municipal proceedings without the applicant being notified nor present create a perception of bias, violation of due process and raises questions about a municipality's willingness to consider the contentions of its citizens in a fair and responsible way. UNE has the right to protect its property interests, including its appeals to a neutral, unbiased Harbor Commission or Court (*Fitandies vs City of Saco, 2004).* The public discussions at meeting on the merits of the forthcoming application, email communications, and raising the concern of the pending litigation (the excise of an appellate rights is absolutely appropriate and should never be raised as an issue in a review process) has amounted to an illicitly approved denial by the Harbor Commission.

I have also notified the Assistant Harbormaster, by copy of this communication, that he, because of the close working relationship and the admitted role of training him, will not be able to be the administrative hearing officer in this matter.

I will soon announce the appointment of a special 'Harbormaster Pro Tem' for the sole purpose of hearing and deciding on the anticipated application.

CITY MANAGER
LETTER TO HARBORMASTER
GIVING NOTICE OF REMOVAL
FOR UNE PIER REVIEW

City of Biddeford, Maine

The Office of
City Manager
James A. Bennett
Email: james.bennett@biddefordmaine.org

May 22, 2024

Mr. Paul Lariviere, Harbormaster
517 Pool Rd
Biddeford, Maine 04005

RE: Expected University of New England (UNE) New Pier Application

Dear Mr. Lariviere,

It is a reasonable assumption that UNE will formally submit their application for the so-called Girard Marine Science Center pier (SMSC Pier). This application will be submitted to you pursuant to Chapter 74-35(a)-(c) of the City Code.

In your official capacity as the Harbormaster, it is your responsibility to consider the application based on the merits of the submitted information. You must join other government officials in ensuring that constitutional property rights are protected, including those of the applicant. Further, you are entrusted to ensure applicants are entitled to a fair and unbiased hearing. As the City Manager, I am enjoined with the same responsibilities.

The City Code also directs the Harbormaster to facilitate and guide any applicant through the application process (Code 74-35(d)). I am aware that you have been playing this role with this proposed application since at least 1995, if not earlier. First as the Assistant Harbormaster and most recently, as the current Harbormaster.

The record is clear that UNE has a different opinion on the best location for the pier than the location your 'guidance and facilitation' has identified. Their preferred location, as I understand it, is based on the information they have received from technical experts they have hired to assist in siting and permitting the pier through various reviewing agencies.

Based on your public comments, you have been steadfast in your conclusion that the only location that is acceptable is the site that you directed UNE towards. These comments and other actions have raised the issue regarding your ability perform your duties objectively. It's my responsibility to evaluate whether you moved beyond the 'guidance and facilitation' role as contemplated by the Code and have essentially acted as the administrative hearing officer prior to the actual submittal of the application.

You have publicly stated there is no way that you would approve the site they are proposing on more than one occasion. It is generally understood that you have informally been in contract with other reviewing agencies to advocate support of your preferred site. There are public

meetings where it has been reported that you have denied the location that UNE desires; yet no such application has ever been made. You decided to let those comments stand even when lacking factual accuracy. You actively participated in public discussions with the Harbor Commission, the very appellant board to consider any appeals of the Harbormaster's decision, specific to your actions and rationale to date, without any notice to the applicant. Referring to UNE's 'application'[i] as lacking 'common sense' publicly and made outside of any noticed, formal proceeding.

Recent Maine Court decisions are helpful in my evaluation process. Having the public record misrepresent a denial of a permit even before an actual application has been submitted, is a denial of the applicants right to due process. In *Kirkpatrick vs City of Bangor,* 1999, the court concluded that denying the right to due process within both the U.S. and Maine Constitutions is equivalent to denying a property right.

Further, an administrative hearing officer (which you are when considering formal applications) "enjoys a presumption of honesty and integrity, which is only rebutted by showing of some substantial countervailing reason to conclude that a decision maker is actual biased with respect to factual issue being adjudicated" *Mr. & Mrs. V. vs York School District,* 2006. The undisputed facts above, in my opinion, have tarnished the presumption provided by the law.

It is my conclusion that allowing you to be the administrative hearing officer on the anticipated application would be a mistake. In my capacity as the City Manager, bound by the responsibility to ensure the application would be considered objectively, compels me to inform you that I will be removing you from any further action on this pending application. Further, you are directed to make no further comments in this regard, public or private.

I have also notified the Assistant Harbormaster, by copy of this communication, that he, because of the close working relationship and your admitted role of training him, that he will not be able to be the administrative hearing officer in this matter.

Finally, I will be advising, with the assistance of the City Attorney, the Harbor Commission of the difficulty with them hearing any potential appeals on this matter. Specifically, the fact that comments by municipal officials at a municipal proceeding without the applicant being notified nor present create a perception of bias, and that the violation of due process raises questions about a municipality's willingness to consider the contentions of its citizens in a fair and responsible way. UNE has the right to protect its property interests, including its appeals to a neutral, unbiased Harbor Commission or Court (*Fitandies vs City of Saco, 2004).* The public discussions at meetings on the merits of the forthcoming application, email communications, and raising the concern of the pending litigation (the excise of an appellate rights is absolutely appropriate and should never be raised as an issue in a review process) has amounted to an illicitly approved denial by the Harbor Commission.

I should make it clear, that I have not concluded that you have acted with malice nor that you have been intentional in your actions, but simply overstepped your facilitation and guidance role into actions that an independent body would consider inappropriate. Once this immediate issue is concluded, we can revisit my conclusion and decision.

I will soon announce the appointment of a special 'Harbormaster Pro Tem' for the sole purpose of hearing and deciding on the anticipated application.

Respectfully,

James A. Bennett,
City Manager

[1] Understanding that no formal application has been submitted

HARBORMASTER PRO TEM
TEC ASSOCIATES
REVIEW AND PERMISSION
AND CITY CORRESPONDENCE
GRANTING PERMISSION TO
UNE FOR PIER APPLICATION

TEC ASSOCIATES CONSULTING ENGINEERS

22 July 2024

Mr. James A. Bennett
City Manager
City of Biddeford, Maine
205 Main Street
Biddeford, ME 04005

Re: Agreement for Professional Engineering – UNE Pier Project

Dear Mr. Bennett:

TEC Associates proposes to provide professional engineering services for the above referenced project for a fee of $2,800. Our scope of services for this project includes the following tasks:

1. Review an application by the University of New England to construct a pier on the Saco River in Biddeford and make a determination if the application contains the information required by Section 74-35 (c).

All work shall be in accordance with the attached *Statement of Terms and Conditions* and *Engineering Rate Schedule*. Thank you for asking us to assist you with this project.

Very truly yours,
TEC ASSOCIATES

Wayne Duffett, P.E.
President

Enclosed: Statement of Terms and Conditions
Engineering Rate Schedule

I understand and accept this proposal for the City of Biddeford, Maine.

By: _____ Title: _____
(Authorized Representative)

By: _____ Date: _____
(Print or Type Name)

Please sign and return one copy of this proposal to TEC Associates.

40 Mechanic Street South Portland, Maine 04106
Phone: 207-767-6068

City of Biddeford, Maine

The Office of
City Manager
James A. Bennett
Email: james.bennett@biddefordmaine.org

July 9, 2024

University of New England
11 Hills Beach Road
Biddeford, Maine 04005

Attention: Mr. Alan Thibeault, VP of University Operations

RE: Proposed Marine Science Center Pier

Dear Mr. Thibeault,

I write to you today to update you on the above submittal. I apologize for the delay in proceeding with the application. As the University is very aware, unusual circumstances created challenges in assuring that the application was reviewed in an unbiased process.

On behalf of the City and after consulting with the City Solicitor, I have determined that the role of the Harbormaster consistent with City Code 74-35 is primarily limited to two;

- …to grant permission for the pier; and
- …to determine if subsections (c) 1-10 have been complied with.

Further, it is also my determination that completion of subsection (c) 1-10 is a condition precedent prior to the ability of the Harbormaster granting permission or 'signing off' pursuant to section (d) of the ordinance. The City further may delegate the determination of completeness to a third party independent qualified engineering firm.

Therefore, I have engaged Wayne Duffett, PE of TEC Associates specifically to make the determination if your application meets the criteria found in City Code 74-75 Section (c) 1-10. Your application materials have been provided to Mr. Duffett for his review. Your cooperation during his review is requested.

Please feel free to reach out to me if you have any questions

Sincerely,

James A. Bennett
City Manager

CC: Biddeford Mayor and City Council

City of Biddeford, Maine

The Office of
City Manager
James A. Bennett
Email: james.bennett@biddefordmaine.org

August 19, 2024

University of New England
11 Hills Beach Road
Biddeford, Maine 04005

Attention: Mr. Alan Thibeault, VP of University Operations

RE: Notice to Proceed with External Reviews

Dear Mr. Thibeault,

On August 9, 2024, I received written clarification from Mr. Wayne Duffett, PE of TECAssociates that UNE's proposed Research Pier and Float System has complied with City Code 74-35 subsections (c) 1-10. Those sections are as follows:

(1) A formal boundary survey that has been documented at the Registry of Deeds.
(2) A copy of the boundary survey showing the littoral zone, established by extending property lines seaward.
(3) A location map from a portion of a USGS topographic map or coastal chart.
(4) Distance to navigable channels or any federal navigation project.
(5) Mean high- and low-water boundary.
(6) A plan view on the drawing(s) that shows the location and dimensions of the applicant's structure(s) in relation to the applicant's property lines.
(7) A typical cross section/side view of the applicant's structures on the drawing(s).
(8) Evidence that owners of abutting properties have been notified of the applicant's intended project.
(9) Evidence that the 1) Maine Historic Preservation Commission, 2) Aroostook Band of Micmac, 3) Passamaquoddy Tribe of Indians: Pleasant Point; Indian Township, 4) Houlton Band of Maliseet Indians, and 5) Penobscot Indian Nation have been notified of the applicant's intended project.
(10) Completed applications to the Army Corps of Engineers, Department of Environmental Protection and Biddeford Code Enforcement. A regulatory permit from the Saco River Corridor Commission may also be required in some instances.

Based on this information and in harmony with my earlier communications, please consider this as formal notification from the City of Biddeford that the application has been found in compliance with

the above mention City Code. That finding allows the application to proceed in the next steps of the review process; namely formal review by all agencies except those that are part of the City of Biddeford. After each and all of those processes are complete, the City will move forward with the final review(s) by agents and Committees of the City.

While I don't believe it is necessary, let me empathically state that this communication does not in any form, imply that the City has in any way made a determination that the location submitted has been approved. Said approval will considered after completion of all process and in compliance with applicable laws, regulations. This includes all local ordinances.

Please feel free to reach out to me if you have any questions

Sincerely,

James A. Bennett
City Manager

CC: Biddeford Mayor and City Council

EXAMPLE OF
MOORING PERMIT

Harbor Master

APPLICATION DUE DATE: MARCH 15TH

City Of Biddeford
205 Main Street
P.O. Box 586
Biddeford, ME 04005-0586

Read Carefully Before Signing

MOORING PERMIT APPLICATION

(Please Print Or Type)

Date of Application _____ Permit# _____

USE: Personal Rental Comm. Fish Other _____ Summer Year Round City Tag# _____
(Circle One) (Circle One) (By Harbor Master)

TYPE: Granite Block Cement Block WEIGHT_____ HEAVY CHAIN _____ LIGHT CHAIN/NYLON _____ BOWLINE_____
(Nylon Only; Non-Floating)

BOAT REG./DOC# _____ BOAT NAME _____ MAKE _____ YEAR BUILT _____

OWNER NAME _____ HOME TEL: _____ BUS TEL: _____

MAILING ADDRESS _____ CELL. TEL: _____

PERMANENT ADDRESS _____ TEL: _____

_____ EMAIL _____

(Name, address & telephone number of local person responsible for boat, if non-resident REQUIRED)

BOAT DESCRIPTION: Color_____ Trim_____ Length _____ Draft_____ Propulsion_____

OPEN CABIN CANOPY LOBSTER CRUISER SAIL WORK ROW OTHER_____

SPECIFIC LOCATION OF MOORING AREA REQUESTED _____

DATE PRESENT MOORING PUT DOWN _____ LAST INSPECTED _____ BY WHOM_____

By signing this mooring permit application for the City of Biddeford I hereby expressly give my permission to the Harbor Master, the Assistant Harbor Master or anyone lawfully designated by the Harbor Master to raise, lift, possess, transfer or otherwise handle any lobster traps, buoys, cars, wharfs, weirs, nets or any other sort of fishing gear belonging to me as the licensed owner which appears in any channel to and from any harbor which is designated by the Biddeford City Ordinance as an area in which lobster gear or fishing gear of any type is prohibited or which appears within 100 feet of any mooring in violation of an ordinance for the city of Biddeford. I further give my permission to the Harbor Master, Assistant Harbor Master or the Harbor Master's designated agent permission to remove, transfer and secure any fishing gear of any type or nature which is found in violation of any ordinance of the city of Biddeford. I further agree to pay for any and all costs related to the removal, transfer, transportation and storage of said fishing gear. Permission by me, by signing this permit, is given pursuant of Title 12, M.R.S.A. §6434.
This permit is non-transferable and is for the use of the above named boat only, except on a temporary basis at discretion of Harbor Master. The location is subject to change at any time at discretion of Harbor Master or Deputy as conditions dictate. Holder of permit is responsible to set mooring and make adjustments as required for the safety of adjacent boats. Permit numbers must be painted on mooring float in at least 3" letters of a contrasting color.
If mooring is already in place the Harbor Master/Assistant will go to location with owner to identify and approve or reassign location. If a new mooring, Harbor Master/ Assistant will inspect and oversee placement of mooring.
Any boat on a licensed mooring taking on water and in danger of sinking, the Harbor Master may authorize a private contractor to pump out said boat at the expense of the owner. The owner must pay contractor within 60 days or lose mooring privileges.
Registration form and fee must be received before March 15 and mooring in before June 30 or mooring will be considered abandoned and location reassigned, unless prior arrangements have been made with the Harbor Master.
Application permit fee $10.00 to be applied against the mooring fee.

Signed _____ Date _____

THIS PERMIT APPLICATION APPROVED BY HARBOR MASTER/ASSISTANT _____

REQUEST APPROVED YES ☐ NO ☐ DATE _____ EXPIRATION DATE_____

FEE: ~~$125~~ 180

DATE RECEIVED _____ NEXT INSPECTION DUE DATE_____

BY _____

CHECK/MONEY ORDER #_____ CASH

David C.M. Galbraith, City Planner, Deputy Director
of Planning &Economic Development

David.galbraith@biddefordmaine.org

205 Main Street / PO Box 586 • Biddeford, ME
City of Biddeford Government

(207) 571-0700 • www.biddefordmaine.org
@CityofBiddeford

NOTICE OF DECISION

September 4, 2025

Tom Saucier, P.E.
Site Design Associates
23 Whitney Way
Topsham, ME 04086

RE: Planning Board Case #2024.34 Final Plan Review – University of New England (UNE) Site Plan and Shoreland Zoning Review Proposed Construction of a Marine Science Center Research Pier 11 Hills Beach Road (Map #52, Lot 4) located in the City's Institutional (IN) Zoning District.

Dear Tom,

At their meeting of August 6, 2025, the Biddeford Planning Board reviewed the Final Application for 2024.34 –UNE to construct a Marine Science Center Pier on 11 Hills Beach Road, (Tax Map 52, Lot 4) in the Institutional Zone. UNE owns the property Alan Thibeault from UNE presented to the Planning Board.

Based on the evidence available and the conclusions above, the Biddeford Planning Board approves the proposed project summarized within the attached Staff report and pursuant to the provisions of the City of Biddeford Code of Ordinances Land Development Regulations, Article XI (Site Plan Review), and Subdivision Review, and hereby approves Case # 2024.34 for UNE to construct a Marine Science Research Pier at 11 Hills Beach Road (Map 52, Lot 4) in the Institutional Zone with the following Conditions of Approval (COA):

1. The material provided for the proposed project has been reviewed only for general conformance to the City technical requirements. The applicant(s) and/or their technical consultant shall be responsible for the actual design details and completeness of their work. It is incumbent upon the applicant(s) to ensure that the project is in conformance and complies with all City Codes, ordinances and regulations as well as with all state regulations, including, but not limited to, space and bulk standards, performance standards, use standards and other zoning type requirements.

2. Standard Conditions of Approval apply.

3. Modifications to Approved Development Plans: The project shall be constructed in accordance with the approved development plans. No deviations to the approved development plans shall be made without prior written authorization by the City Planner. Should the Applicants desire a modification from approved plans, they shall be required to submit a formal letter requesting a "minor modification" to the approved development plans. The narrative shall be submitted outlining the request, the reasoning for the request (justification) and include plans illustrating the approved plans and proposed modifications. Changes beyond the authority of the City Planner shall be reviewed and approved by the Planning Board. It should be noted that review fees for any proposed changes may be assessed to the Applicant, for Staff or Peer Review time spent evaluating the request.

4. A Letter of Credit or other surety acceptable to the City of Biddeford shall be submitted prior to the issuance of permits or site work being initiated. The financial guarantee shall be established for 150% of the cost of the following improvements:

a. Landscaping
b. Paving
c. Work within ROW (existing or proposed)
d. Stormwater Drainage
e. Loam & seed
f. Sediment & erosion control
g. As-Built Plans
h. Property Monuments

5. Prior to any ground disturbance, the applicant shall establish a construction inspection account equal to $2,500.00.

6. Prior to any ground disturbance, a pre-construction meeting with the owner/applicant, contractor, and City is required. Contact the Engineering Department to schedule this meeting.

7. Contact the Department of Public Works for driveway location permits, curb cut permits and/or street opening permits prior to the start of construction.

8. An as-built plan must be provided to the City of Biddeford Engineering Office at the end of the project electronically, which can be read by the City of Biddeford's Geographic Information System software. Note: Any modifications to the Planning Board approved development plans shall be reviewed and approved by the City Planner prior to being made, including any "field changes".

9. The applicant shall incorporate appropriate erosion control measures into this project to reduce erosion effects from the work. All disturbed areas must be re-vegetated and/or otherwise stabilized at the appropriate stage of the work per Maine DEP standards in the Best Management Practice (BMP) manual.

10. That the Article VI Performance Standards requirements regarding Dust, Fumes, Vapors & Gases (sect 25), Explosive Materials (sect 28), Glare (sect 37), Noise (sect 48) be followed.

11. The applicant shall obtain all other pertinent local, state and federal permits, licenses, and insurance such as blasting, building, electrical, plumbing, etc. prior to commencing business.

12. At the completion of the project the owner/applicant shall request a final inspection. This request shall be directed to the Engineering Department. Performance guarantees and remaining escrow accounts shall not be released until the Planning Office certifies that the project has been completed and is in compliance with the approved development plans and all applicable City Ordinances.

13. The applicant shall submit approved plans for signature of the City's Planning Board, which shall be recorded in the York County Registry of Deeds. An electronic copy of the recorded plan shall be sent to the Planning Office & Engineering Department prior to Building Permit Issuance. (This item has been completed)

14. Once stamped and signed "As-Built drawings" are submitted to the Planning and Engineering Departments (clearly identifying what approved deviations and variances were installed based on the approved permit drawings), the City Engineering Department will conduct an inspection. The "as Built Checklist" shall be submitted for review and approval, for any performance guarantee release.

15. As-Built Drawings and CAD Files need to be submitted to the Planning & Engineering Departments prior to a 'Site Punch list Inspection' and any bond release.

16. As agreed during the public hearing process, the University of New England (UNE) shall be responsible for the reasonable costs, as applicable, for the relocation of all impacted moorings displaced by the construction of the UNE research pier.

17. Fire Department Requirements:

A. The Applicant shall schedule an on-site inspection with the Biddeford Fire Chief to verify that the emergency vehicle turn-around can accommodate the largest vehicle in their fleet to the Department's satisfaction. Any necessary modifications shall be coordinated with the City Planner and constructed to the Fire Chief's satisfaction.

This Final Approval is valid for 1 year (expiration date August 6, 2026). If the authorized

use is not initiated within one year of approval, the permit becomes void, and a new application must be submitted for reconsideration. Appeals of the Planning Board's decision may be made as per the Biddeford Revised Code of Ordinances.

We can be reached at 207-284-9115 if you have any questions.

Sincerely,



David CM Galbraith
City Planner & Acting Director of Planning & Economic Development

Cc: Alan Thibeault, UNE via Email
Andrew Phillippe UNE via Email
Roby Fecteau Director of Code Enforcement via Email
Craig Chekan City Engineer via Email

David C.M. Galbraith, City Planner, Deputy Director
of Planning &Economic Development

David.galbraith@biddefordmaine.org

205 Main Street / PO Box 586 • Biddeford, ME
City of Biddeford Government

(207) 571-0700 • www.biddefordmaine.org
@CityofBiddeford

Standard Conditions of Approval

Owner/Applicant: University of New England
Project Description: Shoreland Application Approval
Project Location: 11 Hills Beach Road
Tax Map & Lot Number: Map 52, Lot 4
Project ID: 2024.34
Date: September 4, 2025

1. The material provided for the proposed project has been reviewed only for general conformance to the City technical requirements. The applicant(s) and/or their technical consultant shall be responsible for the actual design details and completeness of their work. It is incumbent upon the applicant(s) to ensure that the project is in conformance and complies with all City Codes, ordinances and regulations as well as with all state regulations, including, but not limited to, space and bulk standards, performance standards, use standards and other zoning type requirements.

2. All work shall be in conformance with the approved plans and submission documents. No deviations from the approved plans are permitted without prior approval from the Planning Board for major changes, and from the City Planner and City Engineer for minor changes. The City Planner shall make the determination of major or minor.

3. A Letter of Credit or other surety acceptable to the City of Biddeford shall be submitted prior to the issuance of permits or site work being initiated. The financial guarantee shall be established for 150% of the cost of the following improvements:

a. Landscaping
b. Paving
c. Work within ROW (existing or proposed),
d. Drainage
e. Loam & seed
f. Sediment & erosion control
g. As-Builts
h. Monuments

4. Prior to any ground disturbance, the applicant shall establish a construction inspection account equal to $2,500.00.

5. Prior to any ground disturbance, a pre-construction meeting with the owner/applicant, contractor, and City is required. Contact the Engineering Department to schedule this meeting.

6. Contact the Department of Public Works for driveway location permits, curb cut permits and/or street opening permits prior to the start of construction.

7. An as-built plan must be provided to the City of Biddeford Engineering Office at the end of the project electronically, which can be read by the City of Biddeford's Geographic Information System software. Note: Any modifications to the Planning Board approved development plans shall be reviewed and approved by the City Planner prior to being made, including any "field changes".

8. The applicant shall incorporate appropriate erosion control measures into this project to reduce erosion effects from the work. All disturbed areas must be re-vegetated and/or otherwise stabilized at the appropriate stage of the work per Maine DEP standards in the Best Management Practice (BMP) manual.

9. That Article VI Performance Standards requirements regarding Dust, Fumes, Vapors & Gases (sect 25), Explosive Materials (sect 28), Glare (sect 37), Noise (sect 48) be followed.

10. The applicant shall obtain all other pertinent local, state and federal permits, licenses, and insurance such as blasting, building, electrical, plumbing, etc. prior to commencing business.

11. At the completion of the project the owner/applicant shall request a final inspection. This request shall be directed to the Planning Office. Performance guarantees and remaining escrow accounts shall not be released until the Planning Office certifies that the project has been completed and is in compliance with the approval and all applicable City Ordinances.

12. The applicant shall submit approved plans for signature of the City's Planning Board, which shall be recorded in the York County Registry of Deeds. An electronic copy of the recorded plan shall be sent to the Planning Office. (Completed)

CITY OF BIDDEFORD

Planning and Development Department

David Galbraith
City Planner & Deputy Director of Planning & Development
205 Main Street
P.O. Box 586
Biddeford, ME 04005
(207) 284-9115
David.galbraith@biddefordmaine.org

FINDINGS OF FACT AND CONCLUSIONS OF LAW

Planning Board Case #2024.34
Final Plan Review – University of New England (UNE)
Site Plan and Shoreland Zoning Review
Proposed Construction of a Marine Science Center Research Pier
11 Hills Beach Road (Map #52, Lot 4) located in the City's Institutional (IN) Zoning District.
Date: August 6, 2025

Pursuant to the provisions of the City of Biddeford Code of Ordinances Land Development Regulations, Article XI (Site Plan Review), and Article XIV (Shoreland Zoning Ordinance), the Biddeford Planning Board has considered the application of Based on its review, including supportive data, public hearing testimony and related materials contained in the record, the Planning Board makes the following Findings of Fact and Conclusions of Law:

---

1. PROJECT DATA/INFORMATION

1.	Applicant:	University of New England 11 Hills Beach Road Biddeford, ME
2.	Owner of Property:	University of New England 11 Hills Beach Road Biddeford, ME
3.	Agent:	Tom Saucier, P.E. Site Design Associates 23 Whitney Way Topsham, ME 04086
4.	Surveyor:	Tom Saucier, P.E. Site Design Associates 23 Whitney Way Topsham, ME 04086
5.	Project Location:	11 Hills Beach Road
6.	Project Tax Map #/Lot #:	Tax Map 52 Lot 4
7.	Lot Size:	49.9-acres
8.	Base Zoning:	Institutional (IN)
9.	Overlay Zoning:	Shoreland Zoning
10.	Existing Use:	Saco River
11.	Proposed Use:	Marine Research Pier
12.	Approvals Required:	Site Plan and Shoreland Review
13.	Uses in the Vicinity:	University
14.	Waivers Requested:	A. **Article XI.II. Section 5.B.1.a.** (post development runoff) B. **Article XI.II. Section 5.B.1.e.3.** (Slopes steeper than 2:1 in ledge).

		C. **Article VI. Section 26.F.:** (cut or fill slopes that exceed 3 horizontals to 1 vertical). D. **Article XIV. Section 15.H.4.** (Road and driveway banks shall be no steeper than a slope of 2 horizontal to 1 vertical).
18.	Waivers Granted - July 16, 2025.	A. **Article XI.II. Section 5.B.1.a.** (post development runoff) B. **Article XI.II. Section 5.B.1.e.3.** (Slopes steeper than 2:1 in ledge). C. **Article VI. Section 26.F.:** (cut or fill slopes that exceed 3 horizontals to 1 vertical). D. **Article XIV. Section 15.H.4.** (Road and driveway banks shall be no steeper than a slope of 2 horizontal to 1 vertical).
22.	Other Non-City Permits Required:	N/A
23.	LDR Attachment A: Fees Paid:	Yes
25.	Planning Board Review History: Sketch Plan Review - May 21, 2025; Site Walk June 9, 2025; Preliminary Review (Tabled)- June 18, 2025; Site Walk #2 – July 9, 2025; Preliminary Review (#2) – July 16, 2025 – Preliminary Approval and Waivers approved. Final Plan Review – August 6, 2025.	

CONCLUSIONS OF LAW:

1. The proposed use meets specific requirements set forth in this ordinance and would be in compliance with applicable state or federal laws;

2. The proposed use would not create fire safety hazards by providing adequate access to the site, or to the buildings on the site, for emergency vehicles and would not create hazards through the storage of chemicals and wastes;

3. The proposed exterior lighting, where allowed, would not create hazards to motorists traveling on adjacent public streets or is adequate for the safety of occupants or users of the site or would not damage the value and diminish the usability of adjacent properties;

4. The provisions for buffers and on-site landscaping provide adequate protection to neighboring properties from detrimental or unsightly features of the development;

5. The proposed use would not have a significant, detrimental effect on the use and peaceful enjoyment of abutting property as the result of noise, vibrations, fumes, odor, dust, glare, hours of operation, or other causes;

6. The provisions for vehicular loading and unloading and parking and for vehicular and pedestrian circulation on the site and onto adjacent public streets would not create hazards to public safety or traffic congestion;

7. The proposed use would generate a volume of traffic that can reasonably be accommodated by the existing road network, or would not create unreasonable traffic hazards or would not exacerbate an existing traffic hazard, or would not create unreasonable traffic congestion;

8. The proposed use would not have a significant, detrimental effect on the value of adjacent properties which could be avoided by reasonable modification of the proposal;

9. The proposed use would not have an adverse impact on the privacy of the residents of the immediate area (within 500 feet) which could be avoided by reasonable modification of the proposal;

10. The proposed use would be in compliance with Biddeford's Comprehensive Plan;

11. The proposed use would not have an adverse impact on the immediate neighborhood or the community relative to architectural design, scale, bulk and building height, identity and historical character, or visual integrity, which could be avoided by reasonable modification of the proposal;

12. The design of the site would not result in significant flood hazards or flood damage or would be in conformance with applicable flood hazard protection requirements;

13. Adequate provision has been made for disposal of wastewater or solid waste or for the prevention of ground or surface water contamination;

14. Adequate provision has been made to control erosion or sedimentation;

15. Adequate provision has been made to handle stormwater runoff or other drainage problems on the site; and the proposed development will not unduly burden off-site surface water systems;

16. The proposed water supply would meet the demands of the proposed use for fire protection purposes;

17. Adequate provision has been made for the transportation, storage, and disposal of hazardous substances and materials as defined by state law;

18. The proposed use would not have an adverse impact on scenic vistas or on significant wildlife habitat or wetland areas and water bodies which could be avoided by reasonable modification of the proposal;

19. When located in the Shoreland Zone, the proposed use would meet the purposes of Shoreland Zoning as identified in Article XIV, Section 1 (Purposes) of this ordinance.

APPROVAL GRANTED:

Based on the evidence available and the conclusions above, the Biddeford Planning Board approves the proposed project summarized within the attached Staff report and pursuant to the provisions of the City of Biddeford Code of Ordinances Land Development Regulations, Article XI (Site Plan Review), and Article XIV (Shoreland Zoning), the Biddeford Planning Board has approved the application # 2024.34 Final Plan Review – Site Plan and Shoreland Zoning Review for the University of New England (UNE) / Proposed Construction of a Marine Science Center Research Pier to be located at 11 Hills Beach Road (Map #52, Lot 4) located in the City's Institutional (IN) Zoning District, with the attached Findings of Fact (FOF) with the following Conditions of Approval (COA):

1. The material provided for the proposed project has been reviewed only for general conformance to the City technical requirements. The applicant(s) and/or their technical consultant shall be responsible for the actual design details and completeness of their work. It is incumbent upon the applicant(s) to ensure that the project is in conformance and complies with all City Codes, ordinances and regulations as well as with all state regulations, including, but not limited to, space and bulk standards, performance standards, use standards and other zoning type requirements.

2. Standard Conditions of Approval apply.

3. Modifications to Approved Development Plans: The project shall be constructed in accordance with the approved development plans. No deviations to the approved development plans shall be made without prior written authorization by the City Planner. Should the Applicants desire a modification from approved plans, they shall be required to submit a formal letter requesting a "minor modification" to the approved development plans. The narrative shall be submitted outlining the request, the reasoning for the request (justification) and shall include plans illustrating the approved plans and proposed modifications. Changes beyond the authority of the City Planner shall be reviewed and approved by the Planning Board. It should be noted that review fees for any proposed changes may be assessed to the Applicant, for Staff or Peer Review time spent evaluating the request.

4. A Letter of Credit or other surety acceptable to the City of Biddeford shall be submitted prior to the issuance of permits or site work being initiated. The financial guarantee shall be established for 150% of the cost of the following improvements:
   a. Landscaping
   b. Paving
   c. Work within ROW (existing or proposed)
   d. Stormwater Drainage
   e. Loam & seed
   f. Sediment & erosion control
   g. As-Built Plans
   h. Property Monuments

5. Prior to any ground disturbance, the applicant shall establish a construction inspection account equal to: $2,500.00.

6. Prior to any ground disturbance, a pre-construction meeting with the owner/applicant, contractor, and City is required. Contact the Engineering Department to schedule this meeting.

7. Contact the Department of Public Works for driveway location permits, curb cut permits and/or street opening permits prior to the start of construction.

8. An as-built plan must be provided to the City of Biddeford Engineering Office at the end of the project electronically, which can be read by the City of Biddeford's Geographic Information System software. Note: Any modifications to the Planning Board approved development plans shall be reviewed and approved by the City Planner prior to being made, including any "field changes".

9. The applicant shall incorporate appropriate erosion control measures into this project to reduce erosion effects from the work. All disturbed areas must be re-vegetated and/or otherwise stabilized at the appropriate stage of the work per Maine DEP standards in the Best Management Practice (BMP) manual.

10. That the Article VI Performance Standards requirements regarding Dust, Fumes, Vapors & Gases (sect 25), Explosive Materials (sect 28), Glare (sect 37), Noise (sect 48) be followed.

11. The applicant shall obtain all other pertinent local, state and federal permits, licenses, and insurance such as blasting, building, electrical, plumbing, etc. prior to commencing business.

12. At the completion of the project the owner/applicant shall request a final inspection. This request shall be directed to the Engineering Department. Performance guarantees and remaining escrow accounts shall not be released until the Planning Office certifies that the project has been completed and is in compliance with the approved development plans and all applicable City Ordinances.

13. The applicant shall submit approved plans for signature of the City's Planning Board, which shall be recorded in the York County Registry of Deeds. An electronic copy of the recorded plan shall be sent to the Planning Office.

14. Once stamped and signed "As-Built drawings" are submitted to the Planning and Engineering Departments (clearly identifying what approved deviations and variances were installed based on the approved permit drawings), the City Engineering Department will conduct an inspection. **The "as Built Checklist" shall be submitted for review and approval, for any performance guarantee release.**

15. As-Built Drawings and CAD Files need to be submitted to the Planning & Engineering Departments **prior to a 'Site Punch list Inspection' and any bond release.**

16. York County Recorded Drawings: Applicant must submit recorded copies of York County Registry of Deed drawings to Planning & Engineering Department **prior to Building Permit Issuance.**

17. As agreed during the public hearing process, the University of New England (UNE) shall be responsible for the reasonable costs, as applicable, for the relocation of all impacted moorings displaced by the construction of the UNE research pier.

18. Fire Department Requirements:

    A. The Applicant shall schedule an on-site inspection with the Biddeford Fire Chief to verify that the emergency vehicle turn-around can accommodate the largest vehicle in their fleet to the Department's satisfaction. Any necessary modifications shall be coordinated with the City Planner and constructed to the Fire Chief's satisfaction.

Alexa Plotkin Planning Board Chair

8/21/25
Date

CITY OF BIDDEFORD

Planning and Development Department

David C.M. Galbraith
Deputy Director/City Planner
205 Main Street
P.O. Box 586
Biddeford, ME 04005
(207) 284-9115
David.Galbraith@biddefordmaine.org

PLANNING BOARD STAFF REPORT

TO: Chair Plotkin and Members of the Biddeford Planning Board

FROM: David C.M. Galbraith, Deputy Director/City Planner

DATE: July 28, 2025

RE: 2024.34 Final Plan Review – Site Plan and Shoreland Zoning Review for the University of New England (UNE) / Proposed Construction of a Marine Science Center Research Pier to be located at 11 Hills Beach Road (Map #52, Lot 4) located in the City's Institutional (IN) Zoning District.

MEETING DATE: August 6, 2025, at 6:00 PM

1. REVIEW HISTORY:

The subject application has had the following hearings/meetings:

Planning Board Review History:
Sketch Plan Review - May 21, 2025;
Site Walk June 9, 2025;
Preliminary Review (Tabled)- June 18, 2025;
Site Walk #2 – July 9, 2025;
Preliminary Review (#2) – July 16, 2025 – Preliminary Approval and Waivers approved.
Final Plan Review – August 6, 2025.

This project was last discussed during the July 16, 2025, Planning Board meeting where the project was granted preliminary plan approval. During the same hearing the Applicant requested four (4) waivers which were also granted by the Board. The requested / granted waivers are outlined below:

Waivers Requested / Granted:

A. Article XI.II. Section 5.B.1.a. (post development runoff)
B. Article XI.II. Section 5.B.1.e.3. (Slopes steeper than 2:1 in ledge).
C. Article VI. Section 26.F.: (cut or fill slopes that exceed 3 horizontals to 1 vertical).
D. Article XIV. Section 15.H.4. (Road and driveway banks shall be no steeper than a slope of 2 horizontal to 1 vertical).

The Site Plan and Shoreland Zoning approval and the four (4) requested waivers were approved by a 3-2 vote by the Board with members Plotkin, Patoine and Deschambault voting in the affirmative and two (2) members voting in the negative (Angers and Dubois).

The application before the Planning Board is a request for Final Plan Approval.

RE: Case # 2024.34 Final Plan Review – Site Plan and Shoreland Zoning Review for the University of New England (UNE) / Proposed Construction of a Marine Science Center Research Pier to be located at 11 Hills Beach Road (Map #52, Lot 4) located in the City's Institutional (IN) Zoning District.

MEETING DATE: August 6, 2025, at 6:00 PM

2. INTRODUCTION

Tom Saucier, PE of Site Design Associates, is representing the University of New England (UNE) who is applying for Final Site Plan Review within the Shoreland Zoning District. The University of New England (UNE) proposes to construct a new pier on the Saco River adjacent to the Girard Marine Science Center (GMSC) to support research and educational programming. The project has been in development for more than 10 years and has gone through extensive planning and alternatives analysis in achieving the design that is being proposed.

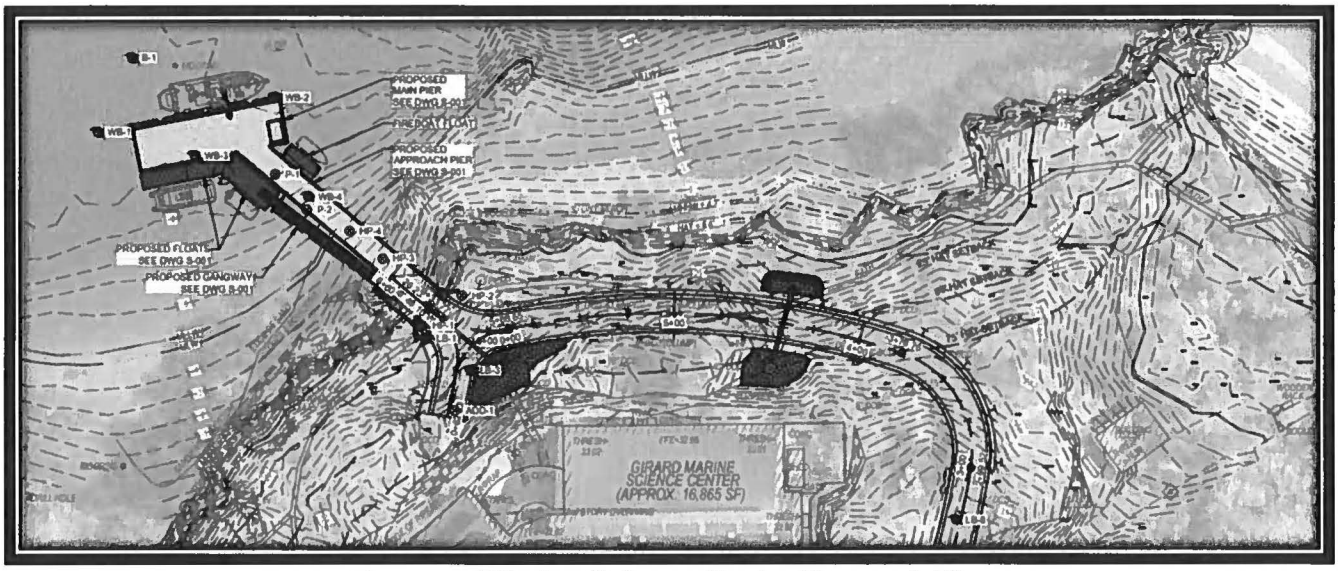

Proposed Marine Science Center Research Pier

It should be noted that the Planning Department received the formal application for this project on April 16, 2025. However, the case # that was assigned to this project was in 2024 (Case # 2024.34) as that is when the Planning Department started receiving comments from the public on this application (prior to application submittal), and Staff wanted to make certain that any and all correspondence related to this matter be saved within the public record for complete transparency. These submitted emails / letters have been consistently forwarded to the Planning Board and the University New England and have been maintained by the Planning Department.

RE: Case # 2024.34 Final Plan Review – Site Plan and Shoreland Zoning Review for the University of New England (UNE) / Proposed Construction of a Marine Science Center Research Pier to be located at 11 Hills Beach Road (Map #52, Lot 4) located in the City's Institutional (IN) Zoning District.

MEETING DATE: August 6, 2025, at 6:00 PM



University of New England (UNE) – proposed Marine Science Center Research Pier

The University of New England (UNE) campus is located along the Saco River in Biddeford, ME. The Marine Science Center is located on the waterfront at the easterly end of campus approximately opposite Camp Ellis in Saco. To support MSC research activities, UNE proposes to construct a pier from the shore adjacent to the MSC into the Saco River to provide an all-tide access facility for small and shallow draft vessels (skiffs, landing craft, up to approximately 3-foot draft), with tidally-restricted access for larger vessels.

RE: Case # 2024.34 Final Plan Review – Site Plan and Shoreland Zoning Review for the University of New England (UNE) / Proposed Construction of a Marine Science Center Research Pier to be located at 11 Hills Beach Road (Map #52, Lot 4) located in the City's Institutional (IN) Zoning District.

MEETING DATE: August 6, 2025, at 6:00 PM

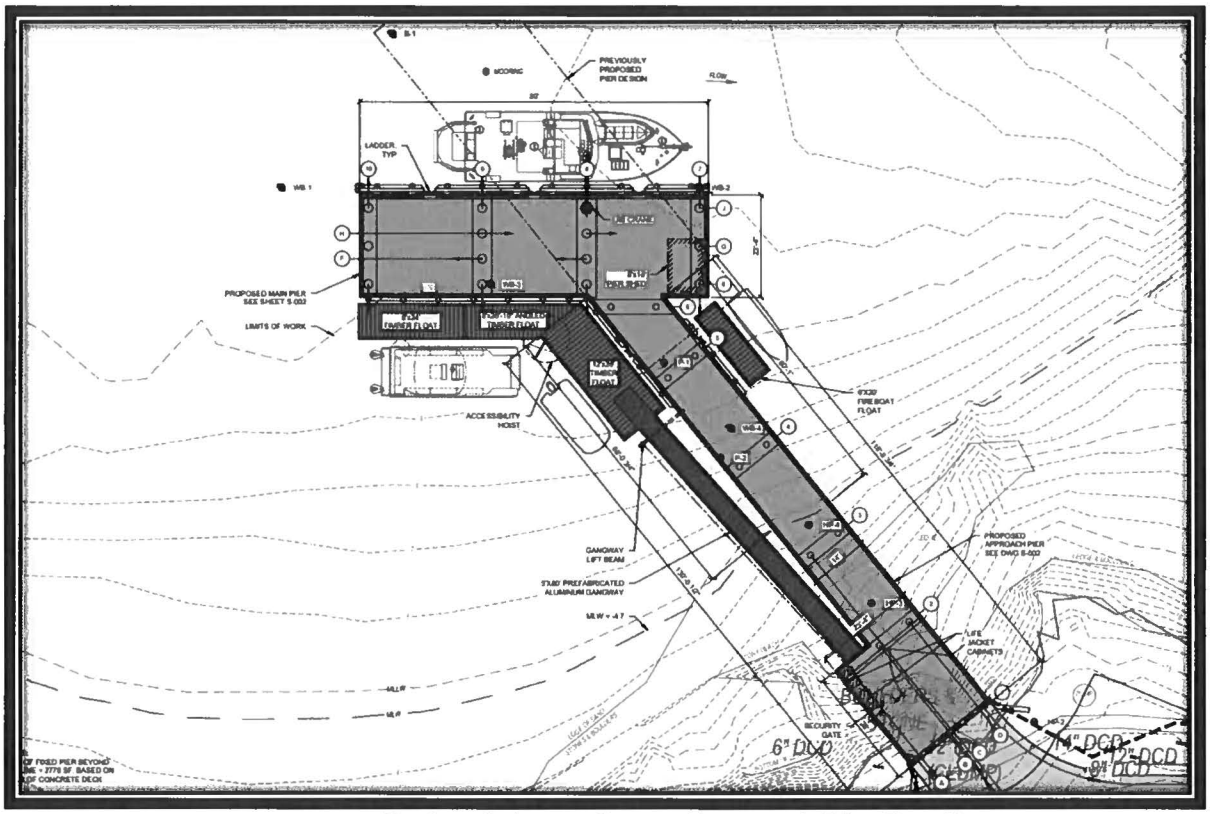

Marine Science Center Research Pier Detail

The proposed facility includes the following:

1. A pile supported pier structure extending from shore into the Saco River. The proposed pier includes an approximately 130-foot-long approach section extending from shore and an 80-foot-long pier head section oriented roughly parallel to the direction of flow in the river. The pier consists of a concrete superstructure on steel pipe piles, with timber fender piles for vessel berthing and floating docks, and a pile supported gangway lifting beam to allow the gangway ramp to be temporarily removed from the water. Site 7 (Preferred) Stormwater Management Report UNE Marine Science Center Pier September 2023, Revision B. April 2025 GEI Consultants, Inc.

2. A floating dock system consisting of one 8-foot by 24-foot float, one 8-foot by 26- foot 10-inch float, and one 12-foot by 30-foot gangway landing float to provide alltide vessel access for UNE's vessels on the west side of the pier, and a single 6-foot by 20-foot floating dock to provide a tie-up location for the City of Biddeford Fire Boat on the east side of the pier.

3. An 80-foot by 5-foot gangway, to provide ADA compliant access to the float system.

4. An upland access road connecting the existing road at the MSC to the proposed pier, including associated site grading, drainage, and stormwater management features.

These proposed improvements will result in a total increase in the impervious area totaling 0.249 acres. The increase in the impervious area will be managed by the two bioretention filter cells to the north of the Girard Marine Science Center. Runoff will be conveyed to the bioretention filter cells via proposed vegetated swales along the low side of the superelevated access road. The bioretention filter cells will slowly release captured stormwater via underground pipe into the Saco River/Atlantic Ocean.

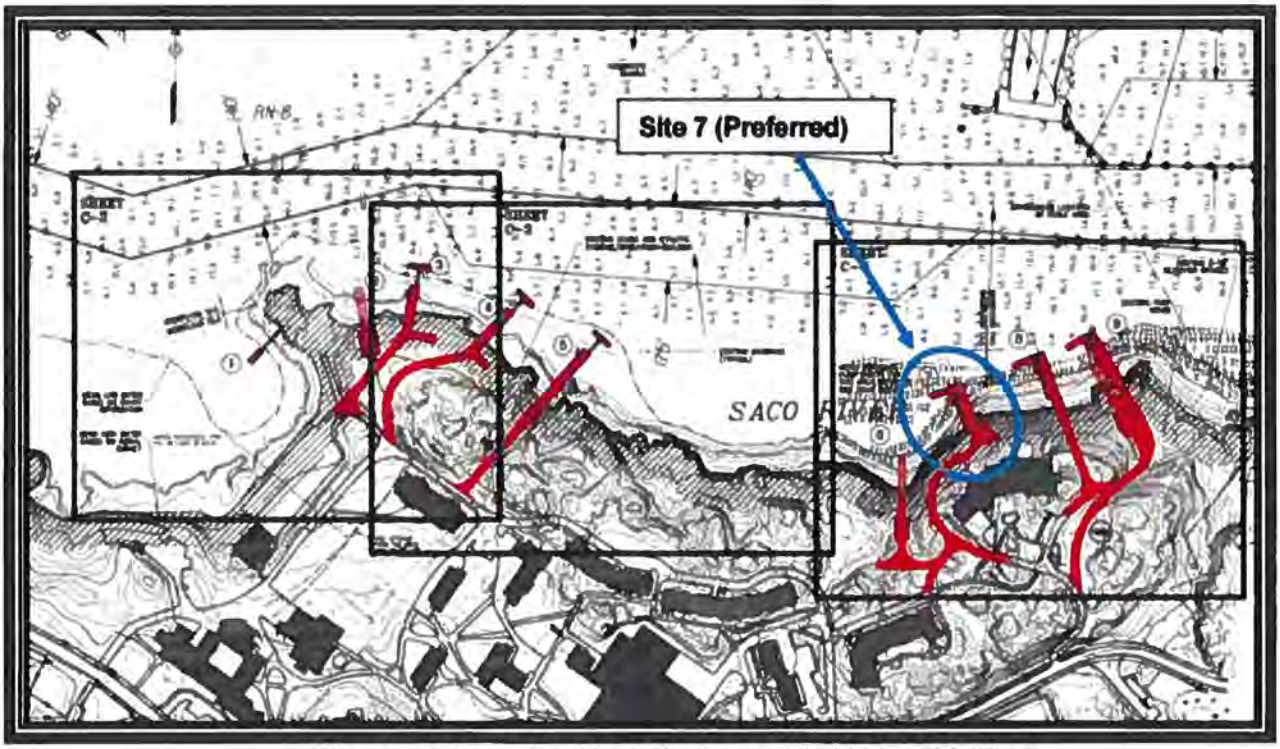

Fig. 1 – Alternative Sites Evaluated in 2008-2010 Study

As outlined in their project narrative, multiple locations for the pier were evaluated Alternative locations *"for more than 10 years and has gone through extensive planning and alternatives analysis in arriving at the design that is proposed"*.

The University's consultants (Daniel Bannon, P.E., CFM and Barney Baker, P.E. of GEI Consultants) evaluated alternate pier locations and concluded that:

> *"GEI has reviewed the concerns raised by the Saco and Biddeford Harbormasters and evaluated their impact on the proposed design, reviewed the history of planning that led to the current design location and layout, and reviewed the potential advantages and disadvantages offered by the suggested alternative pier location. <u>While we respectfully value the input and suggestions for an alternative layout, it is our opinion that the proposed design represents the preferred balance of project requirements and site constraints. Compared to the suggested alternative, the proposed design achieves adequate water depth, provides safe navigation, results in a structure of smaller overall dimensions with less coastal wetland impact, does not appear to be subject to significant sediment deposition, and locates the pier in a location that is</u>*

*less exposed to current and icing impacts. For these reasons, GEI recommends that the current design and pier location be maintained" (*Note: Emphasis added).*

After completing the pier feasibility study and identifying Site 7 as the preferred pier location, UNE undertook additional effort in 2015-2016 to study alternative pier layouts that would address the functional and vessel needs of the marine science curriculum as well as the site exposure, berthing conditions, access requirements, and associated site impacts. During this work, numerous alternative pier layouts were considered. Alternate locations evaluated water depth, exposure to currents, location relative to river sediment deposition, exposure to icing, and impacts to moorings.

3. PROJECT DATA/INFORMATION

1.	Applicant:	University of New England 11 Hills Beach Road Biddeford, ME
2.	Owner of Property:	University of New England 11 Hills Beach Road Biddeford, ME
3.	Agent:	Tom Saucier, P.E. Site Design Associates 23 Whitney Way Topsham, ME 04086
4.	Surveyor:	Tom Saucier, P.E. Site Design Associates 23 Whitney Way Topsham, ME 04086
5.	Project Location:	11 Hills Beach Road
6.	Project Tax Map #/Lot #:	Tax Map 52 Lot 4
7.	Lot Size:	49.9-acres
8.	Base Zoning:	Institutional (IN)
9.	Overlay Zoning:	Shoreland Zoning
10.	Existing Use:	Saco River
11.	Proposed Use:	Marine Research Pier
12.	Approvals Required:	Site Plan and Shoreland Review
13.	Uses in the Vicinity:	University
14.	Waivers Requested:	E. **Article XI.II. Section 5.B.1.a.** (post development runoff) F. **Article XI.II. Section 5.B.1.e.3.** (Slopes steeper than 2:1 in ledge). G. **Article VI. Section 26.F.:** (cut or fill slopes that exceed 3 horizontals to 1 vertical). H. **Article XIV. Section 15.H.4.** (Road and driveway banks shall be no steeper than a slope of 2 horizontal to 1 vertical).

18.	Waivers Granted on July 16, 2025.	A. **Article XI.II. Section 5.B.1.a.** (post development runoff) B. **Article XI.II. Section 5.B.1.e.3.** (Slopes steeper than 2:1 in ledge). C. **Article VI. Section 26.F.:** (cut or fill slopes that exceed 3 horizontals to 1 vertical). D. **Article XIV. Section 15.H.4.** (Road and driveway banks shall be no steeper than a slope of 2 horizontal to 1 vertical).
22.	Other Non-City Permits Required:	N/A
23.	LDR Attachment A: Fees Paid:	Yes
25.	Planning Board Review History: Sketch Plan Review - May 21, 2025; Site Walk June 9, 2025; Preliminary Review (Tabled)- June 18, 2025; Site Walk #2 – July 9, 2025; Preliminary Review (#2) – July 16, 2025 – Preliminary Approval and Waivers approved. Final Plan Review – August 6, 2025.	

4. REVIEW PROCESS

Per City ordinance, this application is subject to Site Plan (Land Development Regulations, Article XI) review and Shoreland Zoning approval by the Planning Board. Below is a list of required agency reviews.

- Saco River Corridor Commission (SRCC) – Approval 9-13-2024 Attached pages # 282-287 of the Applicants application.
- Department of Environmental Protection (MDEP), Findings of Fact (FOF) and Order Pages # 288-295, dated April 11, 2025, of the Applicants application.
- U.S. Army Corps of Engineers, New England District, approval dated March 28, 2025. Pages # 296-298 of the Applicants application.
- Maine Historic Preservation Commission, Approval dated May 15, 2023.
- City of Biddeford letter from Former City Manager (James Bennett) regarding a "Notice to Proceed with External Reviews" / compliance with City Code 74-35, subsections (c) items 1-10, dated August 19, 2025, Pages #302-303 of the Applicants application.

5. SITE PLAN APPROVAL / SITE DESIGN CRITERIA: Below are the specific Site Review Criteria from the City of Biddeford's Code of Ordinances, Part III Land Development Regulations - Article XI Site Plan Review - Section 5 Site design and development criteria:

Site design criteria. The design standards presented here are minimum in nature; the applicant may provide further details to the presented plan. At the same time, some of these standards may not apply to a specific project; the applicant may request in writing waivers from any point following. All waivers must be added as notes to the approved plan and shall be considered conditions of approval.

Besides, the following standards projects presented under this article shall be subject to the performance standards specified in Article VI of this ordinance (Note: Article VI does not contain any additional performance standards for "piers or docks").

1. Drainage.
   a. The rate of post-development runoff shall not exceed that of predevelopment. Details of catch basins, drainage pipes and retention/detention ponds shall be provided as needed with the application. All detail sheets shall bear the seal and signature of a professional engineer, licensed in the State of Maine.

   b. A written engineering report describing the impacted watershed area, projected runoff, and any projected downstream impact shall be required.

   c. Drainage easements shall be established for any concentrated off-site drainage. Such easement shall state who has the responsibility to maintain the easement. Easement documents shall be reviewed, at applicant expense, by the Director of Public Works, City Engineer, and the City Solicitor, as to exactness of content. Plans shall include the location of easements.

   d. Where it is determined by the City Engineer or consultant hired by the Board, that the additional runoff incident to the development of the projected site will overload an existing downstream drainage facility, the Board may require the provision of water-retarding facilities or other improvements to alleviate said problem.

   e. Development in specific areas of concern shall provide detailed information and address specific issues in relation to drainage:

1. Parcels situated within the federally designated flood hazard zone, as per Flood Hazard Boundary Map H01-18, dated May, 1984, as amended, shall comply with all applicable federal regulations relating thereto.

2. One-hundred-year flood elevation line shall be included where applicable.

3. No slope shall be created which results in a slope of more than two feet horizontal to one foot vertical unless proper retaining walls are proposed.

f. Drainage improvements shall be scheduled to be constructed as part of the first portion of any project where drainage improvements are proposed.

g. Special bonding of 1 1/2 times the anticipated cost of said improvements shall be incorporated by the developer to insure that improvements are placed and that they function as planned. No portion of this special bond may be released until the project, or that portion of the project for which the drainage improvement is proposed has been constructed, and until so released by the Planning Board, with the recommendation from the Director of Public Works and the City Engineer.

Applicants' Comments: *A Stormwater Management Report is attached. The report submitted demonstrates compliance with Maine Department of Environmental Protection (DEP) Basic and General standards. The project will include bioretention filters designed to DEP BMP standards for enhancement of stormwater runoff quality.*

Staff Comment: *The above standards have / are being met, as the project complies with the Maine Department of Environmental Protection (DEP) Basic and General standards and permits from the agency.*

2. Utilities.

a. All utilities, including electric, gas, water/sewer, shall be shown on the plat, and separate detail sheets as needed.

b. Accessways, storage, and parking areas shall be graded and improved with pavements, curbs, gutters, sidewalks, storm drainage facilities, outdoor lighting, etc.

c. All accessways/drives and service ways shall be of sufficient width and configuration to accommodate the prospective traffic and to afford satisfactory access to police, firefighting and other such service.

d. Any proposal within 200 feet of a public water or sewer line(s) must connect to system(s). Applicant must supply copies of letters from the environmental specialist of the City of Biddeford for sewer, and water company shall confirm details of connection and/or concerns.

e. Whether or not a municipal water system is proposed, the following items must be specified in application narrative and on plat:

1. Rated normal capacity and gallons per minute at prime use time.

2. Rated maximum capacity and gallons per minute at prime use time.

3. Residual pressure of proposed tap line.

f. Where nondomestic sanitary discharge (any discharge into the public sewer system containing other than normal household wastes) is anticipated, such effluent shall be identified and comply with any and all federal, state, and local laws, ordinances, rules, and regulations. Where any such laws, ordinances, rules and regulations may overlap or may be inconsistent, the more stringent shall apply.

g. Where public sanitary service is available, or where developers must extend such service, applicants must apply for and receive a discharge permit from the City Council of the City of Biddeford prior to approval by the Planning Board.

h. Where practicable, all electrical and telephone utilities shall be placed underground.

Staff Comment: *Power will be fed underground to the pier from the Girard Marine Science Center.* ***The proposed utilities address and meet this standard.***

3. Parking.

a. A parking plan shall delineate the number of parking and delivery or loading spaces and the physical arrangement. Details of parking plan shall conform to the provisions of the off-street parking section of Article VI of this Zoning Ordinance.

b. No on-street parking, delivery or loading is permitted, except where specifically allowed by the Planning Board.

c. Whenever a use existing on the effective date of these regulations is changed thereafter to a new use, parking facilities and access shall be provided as required herein for such new uses.

d. In the case of multifamily projects the number of required parking spaces should be increased 5% to allow for visitor parking.

e. Parking lots shall be landscaped and/or screened to provide for a pleasing visual effect and blending in with the surrounding area.

f. Lots shall be illuminated for security purposes. The lighting shall be designed in such a way that off-site glare is minimized.

g. Adequate space shall be allowed for the accumulation of snow during the winter plowing months.

Staff Comment: *The Girard Marine Science Center provides adequate parking for the associated / "accessory structure (pier)" as the students and faculty of Science Center will be the same users of the proposed pier.* ***The application meets this standard.***

4. Structural layout and design. All proposed structures or additions to existing structures shall address the following items:

a. Design of buildings.

1. Buildings shall be designed to blend harmoniously with the surrounding structures in the neighborhood. New structures should be designed so as to complement the style of the abutting

older structures. A photograph, architectural rendering or other representation of the proposed structure must accompany the application for site review.

2. In the I-3 Zone structures shall have a facade sheath in brick or other masonry finish. Other facade finishes may be used when it can be clearly shown to the board that such facing material will advance the City's intent to make the I-3 area a more attractive gateway to the City.

Staff Comment: *No buildings are being proposed with the exception of the small storage shed located on the proposed pier. The project is also not located within the I-3 area so brick and / or masonry standards do not apply.*

b. Setbacks. Proposed structures shall be set back from roadways, in conformance with requirements for the particular zone; and shall be set in such a way as to blend in harmoniously with buildings on abutting properties, and to allow for adequate landscaping of the front yard.

Staff Comment: *The research pier is sited in conformance with all setback requirements. The proposed pier meets all setbacks.*

c. Fire protection.

1. All proposed structures and additions to existing buildings must be designed to meet existing fire protection standards.

2. Fire hydrants and fire escapes must be clearly presented on plats.

3. Clear ways around buildings must be maintained to provide for 360° access to structures.

4. Areas in front of structures must be kept clear of parking spaces to allow for emergency access.

5. Buildings should be designed with internal sprinkler systems. This is particularly the case in terms of multifamily and industrial/warehousing structures, and structures that will be located in areas that are far or difficult to reach from fire stations.

6. In residential developments of 24 units or more, or buildings of 5,000 square feet or more, a central alarm system to the central fire station shall be installed, unless a negative recommendation, in writing, is received from the Fire Marshal.

7. In residential developments of 24 dwelling units or more, or office buildings with more than two separate establishments or places of business, a "knock box" shall be provided and indicated on plat. This box shall be in accordance with the specifications and standards as prescribed by the Fire Department of the City of Biddeford.

8. Whenever gas, either natural or propane or other type, is proposed to be used on-site, a separate external shutoff valve shall be provided for each building on the site. The valve location shall be indicated on the plat and approved in writing by the fire chief/fire marshal.

Staff Comment: *Based on input from the fire department, the road width was increased to 20 ft per NFPA standards. The turnaround meets the city required dimensional standards and has been modelled to accommodate fire apparatus. The only concern raised to date is the Fire Departments turn-around at the head of the pier. The Applicants have agreed that once constructed the BFD will bring their larges apparatus to the side to verify that the turn-around constructed meets the BFD needs. If the turn-around needs to be modified, the BFD will require minor adjustments to the turn-around to the satisfaction of the Fire Chief. A condition has been added to the recommended Conditions of Approval (COA).*

d. Landscaping.

1. All sites must be landscaped with vegetation that will act to:
   (a) Reduce the impact of lighting, vehicular and structural, on abutting properties;

   (b) Reduce the impact of proposed structures on the privacy of abutters;

   (c) Make the site more attractive to the average viewer.

2. Landscaping measures will be indicated on the plat by drawings and narrative note. The use of trees and shrubs for fencing and shading is strongly encouraged. Care must be taken to ensure that tree, etc., are placed in such a fashion that in time they will cause minimum impact on abutting properties and public roadways and travelways, particularly as they grow.

3. Whenever possible existing vegetation shall be preserved and incorporated into the landscaping scheme of the project.

4. Each proposal will include a detailed landscaping plan. This plan will include the location, type and size of existing mature trees (those trees over eight inches in diameter).

5. Particular attention should be paid to offsetting the visual impact of new structures in areas where there may be a stark contrast with the existing design trend of the neighborhood.

Staff Comment:

The revegetation plan has been developed to meet the City of Biddeford's Shoreland Zoning requirements as well as to preserve a visual buffer for the access drive to minimize visibility from the water to the greatest extent possible, while achieving the required clearing and considering functional requirements such as snow plowing at the turnaround. The revegetation plan also meets the requirements of the Saco River Corridor Commission (SRCC) who issued a permit for the project.

Staff Comment: *Revegetation Plan: The revegetation plan, drawing C-15, is intended to meet the city of Biddeford's shoreland zoning requirements.*
Details are as follows:

- *49 trees are being removed with 21 of those within the 50-foot HAT setback*
- *Approximately 5,850 SF of understory duff later and low growth vegetation (predominantly non-native invasive honeysuckle) is being disturbed within 50 feet of the HAT.*
- *5 tree species are proposed in approximate equal quantities with the evergreen trees located between the road shoulder grading and the top of embankment where they are anticipated to fit under the remaining mature forest canopy, and between existing trees and ledge. Field verification during construction will be required to ensure final plant locations are feasible if shallow ledge or significant remaining tree root stock is present.*
- *3 shrubs (2 evergreen and 1 deciduous) are proposed to plant at the toe of the road embankment as well as in areas around the turnaround where fitting larger trees will be challenging given limited space and the need to maintain an area for plowed snow.*
- *Deciduous trees are spread throughout the area.*
- *The bioretention cells will be filled with a mix of wet, drought and salt tolerant shrubs and perennials which are shown on the plan as a hatched area. The notes on the plan and drawing C-16 plant schedule describe the random pattern mixing of these plants throughout the bio retention cells.*
- *All other disturbed areas will be planted with a native roadside mix of perennial grasses and flowers. It is recommended that this area be mowed once a year in the fall to maintain the mix of plants. If mowed more often, it will revert to mostly lawn grasses. • Mature plant sizes are listed on the plant list to give a sense of the amount of screening that may occur over time.*
- *The applicants are proposing the removal of invasive plant species and a complete replanting of the disturbed areas with native Maine species which Staff believes meet the above standards*

The proposed development meets these standards.

e. Service, storage and utility areas.

1. All service, storage, and utility areas shall be designed to the side or rear yard of a proposed or existing building or structure, and such areas shall be appropriately screened/buffered by walls, fences, earth berms, or vegetation.

2. Proposed utility elements shall be adequately screened; and, if producing sound, baffled upon Planning Board request.

3. Trash receptacles, dumpsters, storage sheds, etc., shall be shown on plat.

Staff Comment: *The research pier includes a small storage shed for equipment associated with the pier. The pier storage is the only storage / service area. The proposed storage / utility areas are minimal in size but are large enough to accommodate the storage needs of pier related activities.*

f. Paving, parking, and storage areas.

1. No paving, parking, or storage shall be permitted within the required setback of any side or rear property line;

2. No paving, parking, or storage (except for entrances/exits) shall be permitted within 25 feet of any front property line. These unpaved nonparking or nonstorage areas shall be maintained as landscaped areas or open spaces.

Staff Comment: *No parking is being planned for the proposed pier. This standard is not applicable.*

g. Handicapped accessibility.

1. Pedestrian walkways, entrances and exits designed for use by the handicapped shall be provided as required by any and all federal, state, or local laws, ordinances, rules and regulations or as requested by the Planning Board.

2. Handicapped parking spaces and accessways shall be indicated on plat whenever they are to be employed.

Staff Comment: *The proposed research pier is handicapped accessible. The project meets this standard.*

h. Loading facilities.

1. Loading facilities for new structures shall be designed to the rear or side of any and all proposed or existing building or structure.

2. Loading facilities shall be designed in accordance with the applicable federal, state, or local laws, ordinances, codes, rules and regulations and shall be off-street or accessible via a public street.

Staff Comment: *No loading areas are being proposed as part of the pier project. This standard does not apply.*

i. Parking, loading, and protective buffers.

1. All parking, loading and protective buffers shall be situated on the same tract or parcel of land as the primary use building or structure.

2. The maximum nonvegetated area of the land area being developed and reviewed shall be 75%.
3. Any parking or paving, including all access ways, egress ways, entrances and exits on streets for both pedestrian and vehicular use, shall not cover or occupy more than 30% of the land area being developed and reviewed and shall be included with the maximum nonvegetated area.

4. In all applications, a minimum of 25% of the land area being developed and reviewed shall remain in its natural state or shall be maintained as appropriately landscaped area.

5. All buildings or structures shall be sited in conformance with established setbacks of the particular zone. No building or structure may be built within the required side yard setback. The Planning Board may require greater setbacks in areas such as turnpikes, water bodies, railroads, etc.

6. All buffered or screened areas shall be densely planted with shrubs or trees which are respectively at least two or three feet high at the time of planting and are of a type which may be expected to form a year-round dense screen of at least five feet high within three years, provided that such screening shall not obstruct the view of oncoming traffic when entering or exiting the site. An additional cash bond to cover the cost of replacement of these plantings may be required. The term of the bond shall be equal to three years from the time of planting. At the end of the three years any unused portion of this security will be returned to the applicant along with accrued interest.

Staff Comment: *The proposed development does not include new parking areas. The non-vegetated area of the land being developed will be less than 75% and a minimum of 25% of the land area being developed either remains in its natural state or consists of landscape and lawn areas. New landscaping is being proposed in all areas being disturbed by the pier construction as discussed within this document and Applicants development plans. The project meets this standard.*

j. Open space.

1. In new residential developments: Open space shall be provided in the ratio of 1,000 square feet for each dwelling unit. This open space shall be identified as either a "green space" or as "recreational space."

2. Whenever practicable, open space in a residential development shall include a mixture of active and passive recreational opportunities to benefit the various residents of the project. Such opportunities would include, but are not limited to, ball and other playing fields, tennis courts, etc.
3. In large-scale projects hiking trails or nature paths are encouraged.

4. In projects that abut rivers or streams a public easement is encouraged, to provide access to a limited natural resource.

5. The plan shall reflect the natural capabilities of the site to support development. Buildings, lots, and support facilities will be clustered in those portions of the site that have the most suitable conditions for development. Environmentally sensitive areas, including but not limited to wetlands, steep slopes, floodplains, significant wildlife habitats, fisheries, scenic areas, habitat for rare and endangered plants and animals, unique natural communities and natural areas, and sand and gravel aquifers will be maintained and preserved to the maximum extent. The development shall include appropriate measures for protecting these resources, including but not limited to modification of the proposed design of the site, timing of construction, and limiting the extent of excavation.

Staff Comment: *The proposed development does not include any residential uses but has been designed around the natural environment. Areas of disturbance will be replanted with natural Maine species and graded to support the proposed pier and it's access. The project meets the above standards.*

k. External lighting.

1. All existing/proposed external lighting must be included on plat. Lighting will be described as needed.

2. Lighting shall be designed to provide adequate illumination on-site, especially in parking areas, walkways and structural entrances, and site entrance from roadways. At the same time all illumination will be designed to mitigate adverse impact on abutting properties and structures, and traffic.

Staff Comment: *An electrical site plan is included in the drawing set which shows the site lighting. Full cut off fixtures will be utilized, and lighting will be the minimum necessary for safety and functionality. The project meets these standards.*

l. Signs.

1. All proposed signs shall meet standards provided in Article VI of the Zoning Ordinance of the City of Biddeford.

2. Signs shall be indicated on plat.

3. A detail of sign design shall be submitted as part of the application for site review.

Staff Comment: *No new signage is being proposed for this project. Any proposed signs shall meet the City's Sign Ordinance.*

m. Historic and archaeological resources. If any portion of the site has been identified as containing historic or archaeological resources, the development shall include appropriate measures for protecting these resources, including but not limited to modification of the proposed design of the site, timing of construction, and limiting the extent of construction.

Staff Comment: *See attachment 10 for a letter from the Maine Historic Preservation Commission clearing the project. The proposed development meets this standard.*

6. **Shoreland Zoning Land Use Standards**: In addition to the Site Plan Approval / Site Design Criteria outlined above, the project is required to comply with the applicable standards of Article XIV. Section 15.C. which are listed below:

15 C. Piers, docks, wharfs, bridges and other structures and uses extending over or below the normal high-water line of a water body or within a wetland.

1. Except as provided in Section 15C11 and Section 15X7, no more than one pier, dock, wharf or similar structure extending or located below the normal high-water line of a water body or within a wetland is allowed on a single residential lot; except that when a single lot contains at least twice the minimum shore frontage as specified in Section 15A, a second structure may be allowed and may remain as long as the lot is not further divided.

Staff Comment: *Standard not applicable*

2. *Access from shore shall be developed on soils appropriate for such use and constructed so as to control erosion.*

Staff Comment: *Access from shore will be developed on soils appropriate for the use. A detailed erosion control plan has been prepared for the project. The proposal meets this standard.*

3. The location shall not interfere with existing developed or natural beach areas.

Staff Comment: *The proposal does not interfere with existing developed or natural beach areas. The application meets this standard.*

4. The facility shall be located so as to minimize adverse effects on fisheries.

Staff Comment: *The facility has been located to minimize adverse effects on fisheries. The plan was reviewed by the National Marine Fisheries Service. The application meets this standard.*

5. The facility shall be no larger in dimension than necessary to carry on with the activity and be consistent with the surrounding character and uses of the area. A temporary pier, dock, or wharf in non-tidal waters shall not be wider than six feet for non-commercial uses.

Applicant Comment: *The facility size is the minimum necessary to carry out current and future research activities and is consistent with the surrounding character and uses of the area, including the Camp Ellis pier on the opposite side of the river.*

Staff Comment: *The proposed project meets this standard.*

6. No new structure shall be built on, over or abutting a pier, wharf, dock or other structure extending beyond the normal high-water line of a water body or within a wetland unless the structure requires direct access to the water body or wetland as an operational necessity.

Staff Comment: *Standard not applicable*

7. New permanent piers and docks on nontidal waters shall not be permitted unless it is clearly demonstrated to the Planning Board that a temporary pier or dock is not feasible, and a permit has been obtained from the Department of Environmental Protection, pursuant to the Natural Resources Protection Act.

Staff Comment: *A temporary pier / dock at this location at this location is not feasible for the proposed use. The Applicant has obtained approval from the Department of Environmental Protection (DEP).*

8. No existing structures built on, over or abutting a pier, dock, wharf or other structure extending beyond the normal high-water line of a water body or within a wetland shall be converted to residential dwelling units in any district.

Staff Comment: *Standard not applicable*

9. Except in the General Development District, structures built on, over or abutting a pier, wharf, dock or other structure extending beyond the normal high-water line of a water body or within a wetland shall not exceed 20 feet in height above the pier, wharf, dock or other structure.

Staff Comment: *An 8 ft x 10 ft shed for storage of life jackets, tools, and research equipment is proposed on the pier, and is an operational necessity. The shed will not exceed 20 ft in height.* ***The proposal meets this standard.***

NOTE: Permanent structures projecting into or over water bodies shall require a permit from the Department of Environmental Protection pursuant to the Natural Resources Protection Act, Title 38 M.R.S.A., Section 480-C.

Staff Comment: *The Applicants have received approval for the proposed dock from the Maine Department of Environmental Protection (MDEP)*

10. *Vegetation may be removed in excess of the standards in Section 15P of this ordinance in order to conduct shoreline stabilization of an eroding shoreline, provided that a permit is obtained from the Planning Board. Construction equipment must access the shoreline by barge when feasible as determined by the Planning Board.*

Applicant Comments:

a. When necessary, the removal of trees and other vegetation to allow for construction equipment access to the stabilization site via land must be limited to no more than 12 feet in width. When the stabilization project is complete, the construction equipment accessway must be restored.

b. Revegetation must occur in accordance with Section 15S.

NOTE: A permit pursuant to the Natural Resource Protection Act is required by the Department of Environmental Protection for shoreline stabilization activities.

Staff Comment: *The applicant has submitted a detailed erosion control and revegetation plan for the project which adequately addresses erosion control and site revegetation standards.* ***The applicant meets these standards.***

11. A deck over a river may be exempted from the shoreland setback requirements if it is part of a downtown revitalization project that is defined in a project plan approved by the legislative body of the municipality, and may include the revitalization of structures formerly used as mills that do not meet the structure setback requirements, if the deck meets the following requirements:

Staff Comment: *The proposal is for a dock/pier, so the above standards related to "decks" are not applicable.* ***Standard not applicable.***

8. FINDINGS OF FACT: The proposed project will need to meet the standards below at Final Board review:

1) The proposed use meets specific requirements set forth in this ordinance and would be in compliance with applicable state or federal laws;

2) The proposed use would not create fire safety hazards by providing adequate access to the site, or to the buildings on the site, for emergency vehicles and would not create hazards through the storage of chemicals and wastes;

3) The proposed exterior lighting, where allowed, would not create hazards for motorists traveling on adjacent public streets or is adequate for the safety of occupants or users of the site or would not damage the value and diminish the usability of adjacent properties;

4) The provisions for buffers and on-site landscaping provide adequate protection to neighboring properties from detrimental or unsightly features of the development;

5) The proposed use would not have a significant, detrimental effect on the use and peaceful enjoyment of abutting property as the result of noise, vibrations, fumes, odors, dust, glare, hours of operation, or other causes;

6) The provisions for vehicular loading and unloading and parking and for vehicular and pedestrian circulation on the site and onto adjacent public streets would not create hazards to public safety or traffic congestion;

7) The proposed use would generate a volume of traffic that can reasonably be accommodated by the existing road network, or would not create unreasonable traffic hazards or would not exacerbate an existing traffic hazard, or would not create unreasonable traffic congestion;

8) The proposed use would not have a significant, detrimental effect on the value of adjacent properties which could be avoided by reasonable modification of the proposal;

9) The proposed use would not have an adverse impact on the privacy of the residents of the immediate area (within 500 feet) which could be avoided by reasonable modification of the proposal;

10) The proposed use would be in compliance with Biddeford's Comprehensive Plan;

11) The proposed use would not have an adverse impact on the immediate neighborhood or the community relative to architectural design, scale, bulk and building height, identity and historical character, or visual integrity, which could be avoided by reasonable modification of the proposal;

12) The design of the site would not result in significant flood hazards or flood damage or would be in conformance with applicable flood hazard protection requirements;

13) Adequate provision has been made for the disposal of wastewater or solid waste or for the prevention of ground or surface water contamination;

14) Adequate provision has been made to control erosion or sedimentation;

15) Adequate provision has been made to handle stormwater runoff or other drainage problems on the site; and the proposed development will not unduly burden off-site surface water systems;

16) The proposed water supply would meet the demands of the proposed use for fire protection purposes;

17) Adequate provision has been made for the transportation, storage, and disposal of hazardous substances and materials as defined by state law;

18) The proposed use would not have an adverse impact on scenic vistas or on significant wildlife habitat or wetland areas and water bodies which could be avoided by reasonable modification of the proposal;

19) When located in the Shoreland Zone, the proposed use would meet the purposes of Shoreland Zoning as identified in Article XIV, Section 1 (Purposes) of this ordinance.

Staff Comment: *In reviewing the application, Staff finds that the application satisfies the City's Shoreland Zoning Ordinance and Site Plan criteria.*

9. SAMPLE MOTIONS FOR SITE PLAN AND SHORELAND ZONE APPROVAL:

The Application before the Board is a "Preliminary Plan", so a formal vote is required.

A. Motion to Approve: I motion to APPROVE Case # 2024.34 Final Plan – Site Plan and Shoreland Zoning Review for the University of New England (UNE) / Proposed Construction of a Marine Science Center Research Pier to be located at 11 Hills Beach Road (Map #52, Lot 4) located in the City's Institutional (IN) Zoning District, with the adoption of the Findings of Fact (FOF) and recommended Conditions of Approval (COA).

B. Motion to Deny I motion to DENY Case # 2024.34 Final Plan – Site Plan and Shoreland Zoning Review for the University of New England (UNE) / Proposed Construction of a Marine Science Center Research Pier to be located at 11 Hills Beach Road (Map #52, Lot 4) located in the City's Institutional (IN) Zoning District, for the following reasons:

1)_____.

2)_____.

3)_____.

C. Motion to Table: I motion to TABLE Case # 2024.34 Final Plan – Site Plan and Shoreland Zoning Review for the University of New England (UNE) / Proposed Construction of a Marine Science Center Research Pier to be located at 11 Hills Beach Road (Map #52, Lot 4) located in the City's Institutional (IN) Zoning District, for the following reasons:

1) _____.

2) _____.

RE: Case # 2024.34 Final Plan Review – Site Plan and Shoreland Zoning Review for the University of New England (UNE) / Proposed Construction of a Marine Science Center Research Pier to be located at 11 Hills Beach Road (Map #52, Lot 4) located in the City's Institutional (IN) Zoning District.

MEETING DATE: August 6, 2025, at 6:00 PM

3) _____.

Sec. 74-35. Construction of wharf, pier or landing regulated. [Ord. of 4-20-1993, § 26-29; Ord. No. 2007.11, 3-6-2007; amended 2-19-2013 by Ord. No. 2013.7; 9-19-2023 by Ord. No. 2023.102]

(a) No additions, alterations, new construction or/or changes to an existing wharf, pier or landing shall be made without prior permission of the Harbormaster.

(b) Permission for the construction of any new wharf or pier within the jurisdictional limits of the City shall not be granted without approval of the Harbormaster, along with federal, state and local governing authorities.

(c) To obtain permission for any new wharf or pier, the applicant must provide the following information:

(1) A formal boundary survey that has been documented at the Registry of Deeds.

(2) A copy of the boundary survey showing the littoral zone, established by extending property lines seaward.

(3) A location map from a portion of a USGS topographic map or coastal chart.

(4) Distance to navigable channels or any federal navigation project.

(5) Mean high- and low-water boundary.

(6) A plan view on the drawing(s) that shows the location and dimensions of the applicant's structure(s) in relation to the applicant's property lines.

(7) A typical cross section/side view of the applicant's structures on the drawing(s).

(8) Evidence that owners of abutting properties have been notified of the applicant's intended project.

(9) Evidence that the 1) Maine Historic Preservation Commission, 2) Aroostook Band of Micmac, 3) Passamaquoddy Tribe of Indians: Pleasant Point; Indian Township, 4) Houlton Band of Maliseet Indians, and 5) Penobscot Indian Nation have been notified of the applicant's intended project.

(10) Completed applications to the Army Corps of Engineers, Department of Environmental Protection and Biddeford Code Enforcement. A regulatory permit from the Saco River Corridor Commission may also be required in some instances.

(d) The process to obtain permission for any new wharf or pier shall be facilitated by the Harbormaster. Initially, the Harbormaster shall be available to guide the applicant through the application process and finally, to sign off that all regulatory approvals have been obtained for construction.

Downloaded from https://ecode360.com/BI3074 on 2025-09-14

Fecteau, Roby

From: Ron Schneider <rschneider5@une.edu>
Sent: Wednesday, November 12, 2025 8:35 AM
To: Fecteau, Roby; Lisa A. Gilbreath
Cc: Hills Beach John; Center, Harry
Subject: UNENCRYPTEDMESSAGE --- ZBA Agenda -- Objection to Motion to Remand and To Stay Appeal
Attachments: 11122025 Objection to Motion to Remand.pdf

Caution: This is an external email. Please take care when clicking links or opening attachments. When in doubt, contact the IT Department

Good morning,

Attached is UNE's Objection to the Motion to Remand and to Stay the Appeal with attachments. As more fully set forth in the attached, UNE objects to the ZBA not making a determination based on the current appeal by John Schafer. UNE also objects to the introduction of new evidence but has provided information with respect to claims made in the Motion if the ZBA entertains that new information provided by Attorney Center and discussed in the Motion despite UNE's objection.

Thank you.

With regards,

Ron

Ron Schneider, Esq
General Counsel and Vice President of Legal Affairs

University of New England
11 Hills Beach Road
Biddeford, Maine 04005

207-602-2924

From: Harry Center <hcenter@woodedlaw.com>
Sent: Tuesday, November 11, 2025 11:46 AM
To: Fecteau, Roby <Roby.Fecteau@Biddefordmaine.org>; Ron Schneider <rschneider5@une.edu>; Lisa A. Gilbreath <lgilbreath@pierceatwood.com>
Cc: Hills Beach John <hillsbeachjohn@yahoo.com>
Subject: RE: EXT: ZBA Agenda

Everyone:

Upon further reflection and in preparation for Thursday evening, I am attaching two portions of the City's Land Use Ordinance. The first attachment sets forth the establishment of the Institutional Zone, with the second page stating that *"All university use...shall conform to an institutional master plan.."* (Art. V, (l)).

The second attachment is the Ordinance section enabling the master plan as a land use ordinance. (Art. V, § 11).

Yesterday I sent everyone the language directly from the master plan itself, referencing the 250 foot no development zone.

Harry Center

Harry B. Center, II, Esq.
Woodman Edmands
234 Main Street
P.O. Box 468
Biddeford, Maine 04005
(207) 284-4581

CONFIDENTIALITY NOTICE: The contents in this message and any attachments are legally privileged and confidential and are intended only for the use of the designated recipient(s) stated above. If you are not the intended recipient, you may not review, copy or distribute either this message or any attachments. If you have received this message in error, please notify the sender immediately by telephone or reply e-mail and delete the entire message and any attachments. Thank you for your cooperation.

From: Harry Center
Sent: Monday, November 10, 2025 5:33 PM
To: Fecteau, Roby <Roby.Fecteau@Biddefordmaine.org>; Ron Schneider <rschneider5@une.edu>; Lisa A. Gilbreath <lgilbreath@pierceatwood.com>
Cc: Hills Beach John <hillsbeachjohn@yahoo.com>
Subject: RE: EXT: ZBA Agenda

Roby:

May I request that you ask the ZBA legal counsel if my motion may be heard prior to consideration of the Appellant's arguments?

I feel that it would be a waste of resources if the arguments on the merits were heard if the matter is going to be remanded.

I respectfully suggest that if the ZBA does remand the application, then a potential aggrieved party may appeal after the Planning Board has acted on the application, with consideration to the Master Plan as well as the findings in the August, 2025 decision.

Thank you,

Harry Center

Harry B. Center, II, Esq.
Woodman Edmands
234 Main Street
P.O. Box 468
Biddeford, Maine 04005
(207) 284-4581

CONFIDENTIALITY NOTICE: The contents in this message and any attachments are legally privileged and confidential and are intended only for the use of the designated recipient(s) stated above. If you are not the intended recipient, you may not review, copy or distribute either this message or any attachments. If you have received this message in error, please notify the sender immediately by telephone or reply e-mail and delete the entire message and any attachments. Thank you for your cooperation.

From: Fecteau, Roby <Roby.Fecteau@Biddefordmaine.org>
Sent: Monday, November 10, 2025 5:21 PM
To: Harry Center <hcenter@woodedlaw.com>; Ron Schneider <rschneider5@une.edu>; Lisa A. Gilbreath <lgilbreath@pierceatwood.com>
Cc: Hills Beach John <hillsbeachjohn@yahoo.com>
Subject: RE: EXT: ZBA Agenda

Good afternoon All:

After consulting with the Zoning Boards Attorney, I have added these two documents to the agenda under.

4.b Planning Board Woodman Edmands; Attorney Harry Center

Roby Fecteau
Director of Code Enforcement &
Emergency Management
City of Biddeford
205 Main Street Suite 104
Monday- Tuesday 7:00 am – 5:00 pm
Wednesday- Thursday 8:00 am- 4:00 pm
Friday- Closed

From: Harry Center <hcenter@woodedlaw.com>
Sent: Monday, November 10, 2025 9:56 AM
To: Fecteau, Roby <Roby.Fecteau@Biddefordmaine.org>; Ron Schneider <rschneider5@une.edu>; Lisa A. Gilbreath <lgilbreath@pierceatwood.com>

Cc: Hills Beach John <hillsbeachjohn@yahoo.com>
Subject: RE: EXT: ZBA Agenda

> **Caution:**This is an external email. Please take care when clicking links or opening attachments. When in doubt, contact the IT Department

Everyone:

This morning I have spoken with John Schafer and Ron Schneider, and made them aware of the attached filing. I am sending this as part of this email chain to ensure that all necessary participants received the attached.

Please let me know if you have any questions or need anything regarding this Request.

Roby- If you need a hard copy, I can walk one across the street to you this morning.

Thank you,

Harry Center

Harry B. Center, II, Esq.
Woodman Edmands
234 Main Street
P.O. Box 468
Biddeford, Maine 04005
(207) 284-4581

CONFIDENTIALITY NOTICE: The contents in this message and any attachments are legally privileged and confidential and are intended only for the use of the designated recipient(s) stated above. If you are not the intended recipient, you may not review, copy or distribute either this message or any attachments. If you have received this message in error, please notify the sender immediately by telephone or reply e-mail and delete the entire message and any attachments. Thank you for your cooperation.

From: Fecteau, Roby <Roby.Fecteau@Biddefordmaine.org>
Sent: Wednesday, November 5, 2025 2:59 PM
To: Ron Schneider <rschneider5@une.edu>; Lisa A. Gilbreath <lgilbreath@pierceatwood.com>
Cc: Hills Beach John <hillsbeachjohn@yahoo.com>; Harry Center <hcenter@woodedlaw.com>
Subject: RE: EXT: ZBA Agenda

As the staff liaison to the zoning board, I laid it out as the appellants will present. Then Attorney Center representing the Planning board, then UNE.

If I made a mistake, I'm sure Attorney Gilbreath will advise the board.

Roby Fecteau
Director of Code Enforcement &

Emergency Management
City of Biddeford
205 Main Street Suite 104
Monday- Tuesday 7:00 am – 5:00 pm
Wednesday- Thursday 8:00 am- 4:00 pm
Friday- Closed

From: Ron Schneider <rschneider5@une.edu>
Sent: Wednesday, November 5, 2025 2:50 PM
To: Fecteau, Roby <Roby.Fecteau@Biddefordmaine.org>; Lisa A. Gilbreath <lgilbreath@pierceatwood.com>
Cc: Hills Beach John <hillsbeachjohn@yahoo.com>; Center, Harry <hcenter@woodedlaw.com>
Subject: RE: EXT: ZBA Agenda

Caution: This is an external email. Please take care when clicking links or opening attachments. When in doubt, contact the IT Department

Good afternoon,

Thank you for sending the agenda. Are you able to clarify when the parties would make a presentation?

With regards,

Ron

Ron Schneider, Esq
General Counsel and Vice President of Legal Affairs

University of New England
11 Hills Beach Road
Biddeford, Maine 04005

207-602-2924



From: Fecteau, Roby <Roby.Fecteau@Biddefordmaine.org>
Sent: Thursday, October 30, 2025 12:37 PM
To: Hills Beach John <hillsbeachjohn@yahoo.com>; Ron Schneider <rschneider5@une.edu>; Center, Harry <hcenter@woodedlaw.com>
Cc: Lisa A. Gilbreath <lgilbreath@pierceatwood.com>
Subject: EXT: ZBA Agenda

This email originated from outside of UNE.

Good afternoon All:

Just wanted you aware that I have finished the agenda and it is posted on the City's website: Below is a link to see everything posted

https://biddefordme.portal.civicclerk.com/event/3141/overview

Roby Fecteau
Director of Code Enforcement &
Emergency Management
City of Biddeford
205 Main Street Suite 104
Monday- Tuesday 7:00 am – 5:00 pm
Wednesday- Thursday 8:00 am- 4:00 pm
Friday- Closed

CITY OF BIDDEFORD
ZONING BOARD OF APPEALS

Re: 2025.001	)	
	)	
	)	OBJECTION TO MOTION/REQUEST TO
John Schafer, Administrative Appeal	)	REMAND MATTER TO PLANNING
of August 6, 2025 Planning Board Decision	)	BOARD
	)	
	)	
	)	

University of New England, by and through undersigned counsel, objects to the Motion/Request to Remand This Matter to The Planning Board ("the Motion"). The Motion is out of order, and the requested relief is not within the power of the Zoning Board of Appeals ("ZBA") given the procedural posture of the appeal by John Schafer, who is the lone appellant.

One appeal has been filed and two bases for the appeal have been articulated. Both the Planning Board and UNE have asserted that Mr. Schafer has no standing as an "aggrieved party" and that his appeal should be denied. There is no justification for staying the decision to deny an appeal that was brought by a person with no standing. Further, none of the issues mentioned in the Motion are issues upon which the appeal was based. Given the limited bases of the appeal and the appellate standard of review, the ZBA is not empowered to accept new evidence, to expand the bases for the appeal, and to stay the appeal as a means to shoehorn a remand back to the Planning Board into the appeal.

Even if there were issues with the validity or activity under permits issued by other regulatory bodies, those issues are for those regulatory bodies to address. Those other regulatory bodies have jurisdiction over the permits that they have issued, the Planning Board or the ZBA does not have any jurisdiction. Using the limited appeal by one person to effect a remand to the

Planning Board for reconsideration of its approval and to collaterally attack permits issued by other regulatory bodies is simply unlawful and a blatant violation of the due process and constitutional obligations of the ZBA and the Planning Board.

Further, the factual statements that provide the basis for the request are not accurate. In particular, it is simply inaccurate that the Saco River Corridor Commission ("the SRCC") or UNE's Master Plan created a "no development" or "no build" zone within 250 feet of the Saco River. As will be detailed below and shown in the attached documents, a 250-foot "vegetative buffer" was created by the SRCC and was shown on UNE's Master Plans in 2008, 2015, and 2022, all approved by the Planning Board. The buffer, however, allows development when it is permitted by the SRCC. The SRCC has affirmed that fact and has affirmed that the permit issued to UNE in 2024 for the pier project "remains valid." Calling the buffer zone a "no development" zone is contrary to the facts as demonstrated by the permits and orders issued to UNE by the SRCC, UNE's Master Plans, and the SRCC's own statements. The Motion should be denied.

I. THE ZBA SHOULD NOT STAY THE APPEAL AS THE ZBA IS NOT EMPOWERED TO REMAND THE MATTER TO THE PLANNING BOARD AND THE PLANNING BOARD IS NOT EMPOWERED TO RECONSIDER ITS APPROVAL

1. The Motion is an improper attempt to use the appeal by one person who has articulated only two bases for his appeal as a way to remand the matter to the Planning Board so that the Planning Board can reconsider its approval. Both the Planning Board and UNE have asserted that Mr. Schafer has no standing, which means that his appeal must be denied. The ZBA may not permit the use of the limited appeal as a means to send the matter back to the Planning Board. The attempt has no foundation in the law or the City's Ordinance and should not be allowed.

2. The Biddeford City Ordinance permits an aggrieved party to file an appeal within 30 days of a decision by the Planning Board. (*See* Part III, Article XIV, Section 16(G)(4)(a)(i) ---

Zoning Board of Appeals Ordinance.) Subsection 4(a)(i) provides specifically, "An administrative or variance appeal may be taken to the Board of Appeals by an aggrieved party from any decision of the Code Enforcement Officer or the Planning Board, except for enforcement-related matters as described in Section 16G1a above."

3. The Ordinance also requires the aggrieved party to file a "written notice of appeal" that provides "a concise written statement indicating what relief is requested and why the appeal or variance should be granted." (*See* Part III, Article XIV, Section 16(G)(4)(a)(ii)(a) --- Zoning Board of Appeals Ordinance.)

4. John Schafer is the only person who filed a notice of appeal. His use of "et al" after his name without identifying any other appellants is not a permissible way to avoid the Ordinance's requirement that an "aggrieved party" must file a notice of appeal within 30 days and articulate the basis for the appeal.

5. Both the Planning Board and UNE have argued in their submissions to the ZBA that Mr. Schafer has no standing. If the ZBA concludes that Mr. Schafer has no standing, his appeal should be denied with no further action by the ZBA. The determination of his standing should not be stayed.

6. Further, Mr. Schafer's notice of appeal is not based on a claim that the 2024 permit issued by the SRCC to UNE is invalid, that the U.S. Army Corps of Engineers' ("USACE") permit is expired, or that the Planning Board's approval is inconsistent with UNE's Master Plan, which means that these issues are not issues that the ZBA may consider within the appeal process.

7. Issues not raised in the notice may not be pursued before this Board. *See Campbell v. City of South Portland*, 2015 ME 125, ¶¶ 14-18, 123 A.3d 994, 999-1000 (finding that petitioner did not preserve an issue for appeal that had not been articulated in notice of appeal). In *Campbell*,

an abutter appealed the issuance of a building permit to a neighbor. She argued before the court and before the South Portland Zoning Board of Appeals that, among other things, the permit violated a density restriction. The court refused to consider her argument because she had not raised the issue in her initial notice of appeal to the South Portland ZBA. Similarly, in this case, issues that form the basis of the Motion were not raised in the notice of appeal and cannot be raised now at this late date.

8. At this time, the Planning Board seeks to obtain a remand so that it can reconsider its decision and asks the ZBA to consider new evidence on issues not raised in the notice of appeal. But, the ZBA is not entitled to accept additional evidence given the appellate standard of review – both the Planning Board and UNE have asserted that the appellate standard applies to this appeal. Specifically, the Biddeford Ordinance states, "The Zoning Board Appeals shall not receive or consider any evidence which was not presented to the Planning Board, but the Zoning Board of Appeals may receive and consider written or oral arguments." (*See* Part III, Article XIV, Section 16(G)(4) -- Zoning Board of Appeals Ordinance.) The Motion does not simply make it argument. Rather, it asks the ZBA to consider evidence that was not presented to the Planning Board and that is not connected to a basis for the appeal.

9. The reconsideration that the Planning Board seeks three months after its approval is not permitted. Such a reconsideration is not allowed per the City's Ordinance and, therefore, cannot be undertaken. In a recent case before Maine's highest court that was decided in June 2025, the court made it clear that a Planning Board cannot reconsider its approval unless there is a provision in an ordinance permitting such action. *See Newfield Sand v. Town of Newfield*, 2025 ME 45, ¶ 20, 335 A.3d 626, 632. The court specifically stated:

> Although we have acknowledged the authority of boards to reconsider permitting decisions, … we have generally held that procedures for such reconsideration must be

> officially adopted … . We have upheld a planning board's authority to reconsider a decision in the absence of an adopted process when the board initially denied the permit, then reconsidered and approved a modified proposal. … Nothing in our opinion endorses an open-ended, post-approval reconsideration period—not provided for by ordinance—as contemplated by the conditions imposed here.

Id. (internal citations omitted). In asking for a remand to permit reconsideration on issues that were not appealed, the Planning Board asks the ZBA to add a condition to the City's ordinance and agree that the Planning Board has power that does not exist in the City's ordinance. As the court made clear in the case involving the Town of Newfield, provisions that do not exist in an ordinance cannot provide the basis for a board's actions. The Planning Board has no authority to reconsider its approval and the ZBA may not remand the matter to allow the Planning Board to do something that it is not authorized to do.

10. The Planning Board issued its approval on August 6, 2025. There has been one appeal of that approval from one person on two issues. It is entirely inappropriate and without legal authority for the ZBA to expand the bases of the appeal and send the matter back to the Planning Board so that it can reconsider its approval. Therefore, the ZBA should deny the Motion.

II. IT IS IMPROPER TO ATTEMPT TO COLLATERALLY ATTACK THE 2024 SRCC PERMIT THROUGH THE ZBA PROCESS, PARTICULARLY WHEN THE PERMIT REMAINS VALID AS STATED BY THE SRCC

11. In addition to the fact that the requested remand would be unlawful, the factual bases for the Motion are not accurate and do not justify a remand, even if a remand was something that could be allowed. First, while the Section 74-35 of the City's Harbor Ordinance does provide that the harbormaster or their designee determines whether other regulatory bodies have granted approval, such a determination has nothing to do with the Planning Board, which is only one of the regulatory approvals that any applicant must receive, including, in this case, UNE. The Planning Board, the SRCC, the USACE, and the Department of Environmental Protection do not

rely on a harbormaster's or their designee's determination. The fact is that UNE has received the appropriate and valid permits from the SRCC and the USACE. Any question about those permits would not be answered by the Planning Board. Rather, they would be answered by the SRCC and the USACE. Neither the USACE nor the SRCC have indicating in any way that the permits are deficient in any way. In fact, as discussed below, the SRCC has affirmed the validity of the 2024 permit issued to UNE.

12. The 2024 SRCC permit, which was issued on September 13, 2024, remains valid. The attempt to collaterally attack that valid SRCC permit through a remand to the Planning Board is not appropriate.

13. On October 20, 2025, after being made aware by the Vice President of Operations at UNE of statements attributed to her in the *Biddeford Gazette*, the Executive Director of the SRCC wrote a letter with a transmittal email to the Biddeford Director of Code Enforcement. She did so to correct "recent misstatements or misleading statements about the permit granted to the UNE pier project by the Commission" and to affirm that the 2024 SRCC permit remains valid. In her cover email, she wrote, in part:

> I have found it necessary to write a staff-level response to recent misstatements or misleading statements about the permit granted to the UNE pier project by the Commission, as was put into an article recently in the online publication the Biddeford Gazette, and also sent to various audiences and news outlets via email. Please find my statements attached, which I hope will bring clarity and information to any Biddeford process or file that might benefit from them.

(*See* October 20, 2025 email and attached letter, attached hereto ay UNE 68).[1]

14. It is important to note and to have it be understood that the SRCC is represented by an Assistant Attorney General within the Maine Attorney General's Office. There has been a

[1] Bates stamp numbers with the prefix "UNE" are included in the bottom right hand corner of the attached documents. The number starts at 68 because UNE's prior submission ended at 67.

resolution from the City Council seeking some guidance from the Maine Attorney General's Office, and UNE assumes that there will be some response from the Maine Attorney General's Office. But, again, the Executive Director's letter was written after consultation with a lawyer within the Maine Attorney General's Office.

15. In her letter, the Executive Director referenced advice of counsel and affirmed that a 250-foot buffer is not a condition that prevents the development of the land within the buffer, in this case by means of an access road to a permitted use. She wrote:

> It is the understanding of staff, as advised by counsel, that the Commission is not restricted from granting further permits for development within the 250-foot buffer by the above-stated 2001 permit amendment condition. The condition was created by, and thus can be altered by, the Commission.

(UNE 71.) She made it clear that the vegetative buffer condition "appears to require that the University refrain from clearing vegetation within the 250-foot buffer *without further permitting.* The condition restricts the actions of the University, and not the subsequent actions of the Commission." (UNE 70) (emphasis in original). The Executive Director affirmed the validity of the 2024 SRCC permit with clarity: "Permit #20-491, as granted by the Commission, *remains valid and is neither under review nor in question at the SRCC office*. No reconsideration petition was received, and there has been no finding of falsification in the application materials." (*Id.*) (emphasis added).

16. An appeal from a SRCC approval that occurs after a public hearing, which, in this case, occurred on August 28, 2024, (*see* UNE 81), must to be filed within 30 days of the Commission's written decision, which, in this case, occurred on September 13, 2024, (UNE 82). *See* 39 M.R.S. § 968. The time to challenge the SRCC's approval has long since passed, and it is not appropriate to try to collaterally attack the permit through a remand to the Planning Board so that it can reconsider its approval. Again, if the SRCC has a concern with the permit it issued, that

is for the Commission to take up with UNE. Rather than expressing any concern, the Commission has affirmed the validity of its permit. It is not for the ZBA or the Planning Board to second guess the Commission.

III. THE SRCC DID NOT CREATE A NO DEVELOPMENT ZONE

17. The SRCC did not create a "no development zone" in 2001. As the attached 2001 permit makes clear, the SRCC created a "250 foot wide vegetative buffer" along the shoreline. (*See* Permit #20-209 Findings of Fact and Order, attached hereto at UNE 74.) The claim that there exists a "no development regulation" or "zone" created by the SRCC is simply not supported by any facts.[2]

18. In the 2024 SRCC permit, the Commission noted that the SRCC Rules Committee "expressed concerns about the diminution of the *vegetated buffer* as a result of the proposed access road construction." (UNE 81.) (emphasis added). The Commission then went on to note that UNE worked with the Commission on an "updated vegetation plan" and that the Commission was ultimately satisfied with the plan, and approved the permit. (*Id.* at 4-5.)[3]

19. Further, the 2024 Permit also makes clear that "buffer" zones are not "no building" or "no development" zones. In fact, in the permit, the SRCC discusses various buffers of various lengths. (UNE 78, 81) (explicit mention of the access road within the "250-foot buffer," "the 75-foot buffer," the "25-foot buffer," and the "vegetated buffer".) In other words, the existence of a "vegetative buffer" or any buffer does not translate into a "no build" forbidden zone. There is

[2] Despite claims by some that the SRCC issued its permit in 2024 after only one meeting, the SRCC issued its permit after a Rules Committee meeting on August 14, 2025 and a site visit on August 23, 2024. (*See* Permit #20-491 Findings of Fact and Order, attached hereto at UNE 81.)

[3] Although the "vegetated buffer" discussed in 2024 may not technically be a reference to the "vegetative buffer" discussed in 2001, the purpose of the referenced buffer is the same, namely the protection of scenic views.

simply no factual or legal basis to remand this matter to the Planning Board based on a claimed infirmity in 2024 SRCC permit.

20. In short, there is no evidence of a "no development zone." There is a "vegetative buffer" created by the SRCC, which allows use with appropriate permitting by the SRCC. As stated in the 2024 SRCC permit, the SRCC did consider the impact of the access road on "the vegetated buffer." The SRCC's Executive Director has reaffirmed the validity of the 2024 SRCC permit. There is no factual or legal basis to question the Executive Director's statements, particularly when, as she reveals in her letter, she made her statement after consulting with counsel, who is a lawyer within the Maine Attorney General's Office.

IV. THE ARMY CORPS OF ENGINEERS PERMIT HAS NOT EXPIRED

21. With respect to the USACE permit, again, this is not an issue for the Planning Board. This is an issue for the USACE if it thinks that any activity by UNE is inconsistent with the permit it issued. Nevertheless, even if the USACE permit were an issue for the Planning Board, there is no evidence that UNE has not complied with the obligation to commence work under the permit. Contained within UNE's application to the Planning Board, which is contained within the Planning Board record, is the USACE's letter approving UNE's application. In that letter, it is clearly stated that UNE's activity under General Permit 2 is authorized. (*See* March 28, 2025 U.S. Army Corps of Engineers permit, attached hereto at UNE 84.) The letter states further, "This verification is valid until October 14, 2025. You must commence or be under contract to commence the work authorized herein by October 14, 2025 and complete the work by October 14, 2026. (UNE 85-86.) The attached email exchange with the USACE regarding that language makes clear regarding the deadline within the General Permit within which UNE's proposed pier was approved, "By UNE having initiated design, and having GEI [its engineering consultants]

under contract for the design and permitting work, USACE would consider that the conditions are satisfied to permit a one year extension." (UNE 88.) That understanding was confirmed by the USACE in the email exchange. (UNE 87.) There can be no doubt that UNE is in fact working with GEI and is working on permitting the project. The email exchange with the USACE confirms that the permit is not expired and is, in fact, extended to October 14, 2026. There is no basis to question the validity of the USACE permit, even if that were an issue for the Planning Board to consider and even if remand to the Planning Board were permitted.

V. UNE'S MASTER PLAN DID NOT CREATE A NO BUILD ZONE WITHIN THE 250 FOOT BUFFER

22. The reference to UNE's Master Plan as creating a "no build" zone within 250 feet of the Saco River is also not accurate. There has been reference to a narrative associated with the Master Plan from 2003. Within Section 7, which deals with Protection of Scenic Views, the narrative provides that UNE must work within the confines of several areas of the law, including SRCC "permit conditions, preventing UNE from building with [250 feet] of the Saco River." As shown above, the attached 2001 SRCC permit makes it clear that the buffer was a "vegetative buffer" and not a "no build" zone. The 2003 narrative was clearly in error. The actual Master Plan map, which was approved by the Planning Board, did not show any no build or no development zone within the 250-foot buffer. (*See* 2023 Master Plan Concept Campus Plan Restrictions on Developable Areas, attached hereto at UNE 89.)

23. Subsequent Master Plans, including the most recent 2022/2023 Master Plan, which was approved by the Planning Board, references the SRCC buffer and has no language about a restriction on building. (*See* Master Plans dated 2008, 2009, 2015, 2016, 2022, and 2023 attached hereto at UNE 90-96.) There are, in fact, "no build" zones within the Master Plan but the 250-foot vegetative buffer is not one of them. It is important to recognize that when the Master Plan

identified a "no build" zone, the area was marked as a "no build" zone. For example, at UNE 95, one can see the presence of clearly marked "no build" parcels. The IZ shoreland zone is not a "no build" parcel. Although it is the current Master Plan that controls, the past Master Plans demonstrate that the buffer recognized in the Master Plan is linked to the SRCC buffer, within which the SRCC can permit activity.

24. Clearly, UNE's proposed project is consistent with the applicable Master Plan. In fact, in 2023, the Planning Board approved the attached Master Plan that shows the access road leading to the general location of the pier. (UNE 96.)[4]

VI. CONCLUSION

For all the reasons stated above and those that follow, UNE respectfully requests that the ZBA deny the Motion to Remand and deny the request to stay the Appellant's appeal. The Planning Board made a decision supported by substantial facts more than three months ago. That decision has been appealed by one person on two bases. A remand may only occur within the context of Appellant's appeal based on those two issues --- the Planning Board has argued that the appeal on those two issues should be denied. The remand cannot occur based on issues not articulated in the notice of appeal or that are based on the introduction of new evidence. There is no authority to permit a reconsideration by the Planning Board. Any concerns about the SRCC permit or the USACE permit are not within the proper purview of the Planning Board, especially given the procedural posture of this matter.

Further, UNE has received valid permits from the SRCC and the USACE. Communications attached to this objection clearly state that the permits are valid and not expired. The current Master Plan and the Master Plans dating back to 2008 link the 250-foot buffer to the SRCC, which is,

[4] It is not clear that anybody claims that the Master Plans were not approved but attached are the records indicating approval that UNE has. (*See* UNE 97-104.)

again, a "vegetative buffer." The SRCC's Executive Director has made it clear that the development within the buffer is allowed subject to permitting by the SRCC. In short, there is no factual or legal basis to question the existence of a 250-foot vegetative buffer within which an access road could be built if the SRCC provided a permit for UNE to do so. The Planning Board approval is simply consistent with the UNE Master Plan as is the 2024 SRCC permit. Therefore, the Motion should be denied.

Respectfully submitted,

/s/ Ronald W. Schneider, Jr.
Ronald W. Schneider, Jr., Esq.

University of New England
11 Hills Beach Road
Biddeford, Maine 04005

From: Fecteau, Roby
To: Hills Beach John; Ron Schneider; Center, Harry
Cc: Lisa A. Gilbreath
Subject: EXT: FW: SRCC Staff Response to concerns about UNE Pier Permit (Permit #20-491)
Date: Tuesday, October 21, 2025 9:41:48 AM
Attachments: 2025_10_20 SRCC Staff Statement on Permit #20-491.pdf

This email originated from outside of UNE.

Good morning.

This correspondence came in at 10:50 last night. I will include it in the ZBA packet and the ZBA may consider it to the extent that it is argument relevant to a point on appeal.

Roby Fecteau
Director of Code Enforcement &
Emergency Management
City of Biddeford
205 Main Street Suite 104
Monday- Tuesday 7:00 am – 5:00 pm
Wednesday- Thursday 8:00 am- 4:00 pm
Friday- Closed

From: cheri@srcc-maine.org <cheri@srcc-maine.org>
Sent: Monday, October 20, 2025 10:50 PM
To: Fecteau, Roby <Roby.Fecteau@Biddefordmaine.org>
Cc: chairperson@srcc-maine.org; Dan Shorette <dan@srcc-maine.org>; Haley Lachance <haley@srcc-maine.org>
Subject: SRCC Staff Response to concerns about UNE Pier Permit (Permit #20-491)

Caution: This is an external email. Please take care when clicking links or opening attachments. When in doubt, contact the IT Department

Hello Roby,

I have found it necessary to write a staff-level response to recent misstatements or misleading statements about the permit granted to the UNE pier project by the Commission, as was put into an article recently in the online publication the Biddeford Gazette, and also sent to various audiences and news outlets via email. Please find my statements attached, which I hope will bring clarity and information to any Biddeford process or file that might benefit from them.

No other regulatory body is required to rely on the outcome of SRCC decisions (unless that is their policy), as each applies a different set of regulations, and the Saco River Corridor Act may be more or less strict than others that are applicable. The purpose of this letter is not to sway or convince any permitting deliberation – it is strictly to provide accurate information about SRCC, its permitting process, SRCC Permit #20-209 (issued in 2001), and the currently active SRCC Permit #20-491, for the UNE research pier.

Thank you,

Cheri

Cheri Dunning, Executive Director
Saco River Corridor Commission
207-625-8123
cheri@srcc-maine.org
81 Maple St.(office)
P.O. Box 283 (mailing address)
Cornish, ME 04020-0283



Saco River Corridor Commission

"Communities Working Together To Protect Our Rivers"

10/20/2025

Mr. Roby Fecteau
Biddeford Code Enforcement
P.O. Box 586
Biddeford, ME 04005

Re: Permit #20-491 (University of New England Research Pier)

Dear Mr. Fecteau,

I've prepared this letter in response to recent misconstrued statements that misrepresent the Commission's staff and process. This letter is intended to explain the SRCC's process in regards to permitting in general and the status of Permit #20-491, which was issued to the University of New England (UNE) in August 2024.

Staff statements, such as those contained in this letter or in any reported quotations, are not statements of the Commission and are made within the bounds of the staff's knowledge. My interest in providing a staff-level statement in response to recent communications/articles is to ensure that there is no misunderstanding about or misconstruing of the Commission's procedures, the validity of SRCC permits, or the actions/statements of the staff. To that purpose, I provide the following points:

1. To the knowledge of its staff, the Saco River Corridor Commission and the staff followed a correct and typical process for considering the application from UNE in August 2024, which was approved as Permit #20-491.
2. Permit #20-491, as granted by the Commission, remains valid and is neither under review nor in question at the SRCC office. No reconsideration petition was received, and there has been no finding of falsification in the application materials.
3. Any statement that the granting of the permit, or the permitted project itself, is "illegal" is incorrect, so far as the SRCC's review is concerned. The staff make no statement about the project's adherence to other rules and regulations not under the purview of the Commission.
4. There was a condition placed on an amendment to a different UNE permit in 2001 (Permit #20-209), which was phrased as follows:

   > "*The applicants are hereby required to retain and maintain a 250 foot wide vegetative buffer along the entire shoreline of the property, measured horizontally starting from the mean high water line and proceeding inland, described herein (Lot #4, Biddeford Property Map #52). Failure to do so will result in revocation of Permit #20-209 and all subsequent amendments.*"

5. That condition appears to require that the University refrain from clearing vegetation within the 250-foot buffer *without further permitting*. The condition restricts the actions of the University, and not the subsequent actions of the Commission.

6. Since that condition was placed, UNE has applied for several permits for development within the 250-foot buffer, and the Commission has granted some of those requests with full knowledge of this previous buffer condition. The permit application files, permit orders, and meeting minutes can be made available for review upon request.

7. It is the understanding of staff, as advised by counsel, that the Commission is not restricted from granting further permits for development within the 250-foot buffer by the above-stated 2001 permit amendment condition. The condition was created by, and thus can be altered by, the Commission.

8. While the 2001 amendment condition was not discussed during the evaluation of Permit #20-491 in August 2024, the existence of that condition would not have prevented the Commission from issuing Permit #20-491 if the proposed pier project was found to be in line with the applicable regulations of the Saco River Corridor Act and its associated Chapters. The Commission granted the permit after such a review of the project as presented. As the permit has not been overturned or revoked by any mechanism, it remains valid until its expiration date of 9/13/2026.

9. SRCC staff did not have knowledge of the 2001 amendment prior to the August 2024 Commission meeting, and the 250-foot buffer condition was therefore not made part of the Commission's review materials. However, the omission of such information does not invalidate the Commission's decision.

10. The staff is aware of no evidence of deliberate omission or falsification of information presented to the Commission during the review of Permit #20-491. It is the conclusion of the SRCC's staff that the Commission acted with correct procedures in this matter.

11. There was no error in the staff-level handling of Application (now Permit) #20-491. Past permit research is an optional, sometimes helpful feature of the staff's process, and is not required by the Act or any Commission policy – it is conducted, when time allows, to provide context, or is researched to answer specific questions if there is a known issue.

12. Permit conditions like the one seen on Permit #20-209 that are applicable beyond the expiration date of the permit are rare, and our staff plans to implement an additional tracking measure to bring similar longstanding conditions to the attention of the staff at the time of a new application, so that they are more easily brought to the attention of the Commission if relevant. The lack of past permitting research in this case, or in any matter before the Commission, does not in any way invalidate the Commission's decisions.

If any further clarification is needed, please contact us at 207-625-8123 or srcc@srcc-maine.org.

Sincerely,

Cheri Dunning

Cheri Dunning
Executive Director
Saco River Corridor Commission
P.O. Box 283, 81 Maple Street
Cornish, Maine 04020
207-625-8123



Saco River Corridor Commission

"Communities Working Together To Protect Our Rivers"

COMMISSION ORDER
IN THE MATTER OF

RECEIVED
10/18/01

UNIVERSITY OF NEW ENGLAND 11 HILLS BEACH ROAD BIDDEFORD, ME 04005 APPLICATION #20-209 (AMENDMENT)	SACO RIVER CORRIDOR ACT FINDINGS OF FACT AND ORDER

The Saco River Corridor Commission, created by the Maine State Legislature in the Saco River Corridor Act, Title 38 M.R.S.A. Section 951 et seq., hereinafter referred to as the "Act", at a meeting held on July 11, 2001 at Porter, Maine, and after a review of the application and supporting documents makes the following findings of fact:

PROJECT DESCRIPTION

1. The applicant is seeking an amendment for the construction of a residence hall complex which consists of two buildings. The first building, known as The East Wing, will have outside dimensions of 54 x 324 feet and the second building, known as The West Wing, will have outside dimensions of 54 x 228 feet. Both buildings will be located 255 feet from the mean high water line and 350 feet from Hills Beach Road. The residence halls were granted a permit at a height of 35 feet on April 25, 2001, and are now proposed at a height of 50 feet.

   The Saco River Corridor Act's defined Limited Residential District has a building height restriction of 35 feet. However, the Commission was recently petitioned by the City of Biddeford to change the district to General Development District and this change was granted on June 27, 2001.

   The amendment request also includes minor revisions to the grading and erosion control plan and modifications to the sidewalk layouts. The applicant submitted Drawing Number C-102, Dated April 2001 Rev. G, produced by SYTDesign Consultants as detail for the minor revisions as part of their amendment request.

SITE LOCATION/DESCRIPTION

2. Location: Lot #4 (Map #52), Hills Beach Road, Biddeford, Maine

3. The lot has 3,500 feet of frontage on the Saco River.

LAND USE DISTRICTING

4. The site of the proposed activity is in the General Development District.

P. O. Box 283, Trafton Street ~ Cornish, Maine 04020-0283 ~ (207) 625-8123 Fax (207) 625-7050 E-mail: srcc@srcc-maine.org

SOIL SUITABILITY

5. Sewage disposal for the Residence Hall Complex will be serviced by the University's existing wastewater treatment plant.

OTHER

6. In the review of the applicant's hardship variance request for the fifty foot tall buildings, the Commission made one finding that the proposed residence halls would represent a visual impact from the Saco River and from public ways. Standards to Address Environmental Factors, specifically standard G, enumerated in Title 38 M.R.S.A. Section 957-D.1.A.-K.;959-A.1.A.-K.; and 963.1.C.(1)-(11) requires that, under Section G.3. "The proposed use will not unreasonably obstruct scenic views from neighboring properties or public roads;" and that "Any proposed structures will not be highly visible from the river. Appropriate buffer strips of uncleared vegetation or plantings capable of providing year-round screening will be used where necessary to reduce visual impact from the river;"

7. The Commission also found that the surrounding location includes not only the campus, but the Hills Beach residential community. The potential visual impact must also be considered with respect to the seven months of the year that the predominantly deciduous trees and other vegetation are without leaves. The applicant submitted to staff a series of photographs showing a balloon study conducted with several vantage points represented. Although a balloon test has merit, the buildings themselves are significantly larger than the balloons used. The photos also emphasize the nature of the vegetation which is clearly deciduous.

8. The applicant's submittal asks the Commission to find that the amendment for a 50 foot tall building is acceptable because the district has now changed from Limited Residential to General Development. The Commission does not believe this distinction between land use districts to be legitimate when reviewed along side the Commission's A-K Environmental Standards. The Environmental Standards section of the Act has been explicitly drafted by the legislature and there is no hint that the Environmental Standards should be applied any less stringently from one district to another. Performance standards are somewhat relaxed in the General Development District, but where this occurs it has been deliberately stated in the Act.

9. At the last Commission Meeting, the University indicated that the proposed structures would be set 250 feet back from the mean high water line. It was also emphatically stated that this was because the City of Biddeford had a 250 foot no-build zone in the shoreland zone. It is further explained that the City of Biddeford holds this shoreland zone in a no-build condition because this area is sensitive from a resource protection and visual impact perspective. The sensitivity of this 250 foot area is specifically related to protection of the river. A 250 foot no development buffer is the most secure method of protecting the river from land use development impacts in perpetuity. While this is factual, it must be remembered that the General Development District ordinarily has no such setback requirement. Any proposed

development need only be set back 100 feet and there is no height restriction. The city has demonstrated an inclination to revise their zoning ordinances as needed and this leaves the shoreland zone in a precarious situation especially from a visual despoliation and resource protection perspective.

10. Testimony and visual presentations by the applicant showed that there are existing university buildings on site which can be seen from the river, and these clearly demonstrate that the visual impact perspective is important in the review of land use impacts.

11. Although the university is now within the General Development District, the current land use is typical of open space, with rural character, and plentiful vegetation.

BASED ON THE ABOVE FINDINGS, as determined at a duly noticed Commission Meeting, the Commission draws the following conclusions:

1. The soils are suitable for the proposed use.

2. The proposed use will not unreasonably involve any of the factors enumerated in Section 959-A.1.A. through K of the Act.

THEREFORE, the Commission APPROVES the request of the University of New England for a permit amendment to construct two residence halls, as described above, at a height of 50 feet, and to perform the stated revisions to the grading and erosion control plan and the modifications to the sidewalk layout on land owned by the applicant at Lot #4 (Map #52), Hills Beach Road, Biddeford, Maine provided the activity is carried out according to the application and exhibits attached thereto and UPON THE FOLLOWING CONDITIONS:

1. Standard Conditions of Approval (copy attached).

2. No part of the proposed Residence Hall Complex including foundations, decks, porches, bulkheads, roof overhangs, balconies, stairs, stoops, steps, ramps, or retaining walls shall be less than 255 horizontal feet from the mean high water line of the Saco River. No portion of the residence halls shall exceed 50 feet in height.

3. The applicants are hereby required to retain and maintain a 250 foot wide vegetative buffer along the entire shoreline of the property, measured horizontally starting from the mean high water line and proceeding inland, described herein (Lot #4, Biddeford Property Map #52). Failure to do so will result in revocation of Permit #20-209 and all subsequent amendments.

Any appeals from this decision, including any of its conditions, shall be taken pursuant to Section 968 of the Act, except that no appeal pursuant to Section 968 of the Act shall be taken from a decision of the Commission which decision was made without a public hearing until a request for reconsideration has been submitted to the Commission and the Commission has made a final determination in the

matter. Any person wishing to file an appeal or to request reconsideration must do so within 30 days of the Commission's written decision and order. Requests for reconsideration must be submitted in accordance with applicable Commission regulations.

DONE AND DATED AT PORTER, MAINE, THIS ELEVENTH DAY OF JULY, 2001.

SACO RIVER CORRIDOR COMMISSION

BY: Francis R. Towns
Francis R. Towns, Chairperson

SACO RIVER CORRIDOR COMMISSION

STANDARD CONDITIONS

The following Standard Conditions shall apply to all Permits and Variances issued by the Saco River Corridor Commission, unless otherwise stated in the permit or variance, or in the Special Conditions attached thereto:

1. The applicant shall take all necessary measures consistent with this permit to ensure that his/her activities or those of his/her agents do not result in significant erosion of soils on the site during construction and operation of the project covered by this approval.

2. On waterfront property within the Corridor, in order to assure that there is protection of water quality and wildlife habitat and to avoid any unreasonable visual impacts associated with development, there shall be no removal of live trees or other vegetation in the area within 75 horizontal feet of the normal high water line, except as follows:

   a. a footpath not to exceed six feet in width as measured between tree trunks may be established, provided that the path meanders and does not create a cleared line of sight to the water.

   b. Selective cutting of trees within the buffer strip may be undertaken provided that a well distributed stand of trees and other vegetation is maintained. In no instance shall trees be removed where such removal would result in less than 3 trees in any 20 x 20 foot (400 square foot) area. Pruning of tree branches on the bottom 1/3 of the tree is permitted, as is the removal of dead, diseased or storm-damaged trees if such trees create a safety hazard to persons or property. These provisions notwithstanding, in no instance shall there be removal of more than 40% of the total volume of trees four inches or more in diameter, as measured at 4 1/2 feet above ground level, in any ten year period.

   c. Existing vegetation under three feet in height and other ground cover shall not be removed, except to provide for a footpath as described above, or unless the applicant has applied for and received additional approval from the Commission to develop access for other permitted uses requiring access to the water.

   d. The applicant shall also check into local shoreland zoning requirements regarding clearing in the shoreland zone and shall comply with all State and local standards in addition to those outlined above. Where there is a conflict among such standards, the more restrictive provisions shall apply.

3. The applicant shall not create a beach, build a dock or otherwise alter the shoreline unless in compliance with the Act. Any docks, piers or floats in the fresh-water areas of the Corridor must be constructed or installed so that they are temporary and capable of seasonal removal and so that they do not extend more than 10% of the width of the river at any time or extend into the water more than 10 feet perpendicular to the shore, whichever is less.

(over)

Saco River Corridor Commission

"Communities Working Together To Protect Our Rivers"

September 13, 2024

UNIVERSITY OF NEW ENGLAND
C/O ANDREW PHILLIPE
11 HILLS BEACH ROAD
BIDDEFORD, ME 04005
PERMIT #20-491

Dear applicant,

Enclosed is Permit #20-491, which the Saco River Corridor Commission approved during the Commission meeting on August 28th, 2024. Copies of this permit have been sent to the parties listed below.

Please read the enclosed document carefully, particularly the conditions to it, which are as follows:

1. Standard Conditions of Approval (copy attached).
2. All in-water portions of the existing research pier shall be removed.

When you have finished the development allowed by this permit, complete the enclosed Notice of Completion of Construction Form and send it to us. The Commission staff will then schedule a time to visit your site to confirm you have complied with the enclosed permit.

Thank you for your cooperation with this Commission. If you have any additional questions, please do not hesitate to contact us.

Sincerely,

Haley Lachance

Haley Lachance
Administrative Assistant
Saco River Corridor Commission

Enclosure
Cc: Tom Saucier, Applicant's Agent – Site Design Associates
Robin Patterson, Biddeford City Clerk
Amber St. Ours, Biddeford Deputy City Clerk
Roby Fecteau, Biddeford Code Enforcement Officer
Danielle Charron, Biddeford Code Enforcement Office Manager
David Galbraith, Biddeford City Planner
Larry Patoine, Biddeford Planning Board Chair



Saco River Corridor Commission

"Communities Working Together To Protect Our Rivers"

COMMISSION ORDER
IN THE MATTER OF

UNIVERSITY OF NEW ENGLAND 11 HILLS BEACH ROAD BIDDEFORD, ME 04005 PERMIT #20-491	SACO RIVER CORRIDOR ACT FINDINGS OF FACT AND ORDER

The Saco River Corridor Commission, created by the Maine State Legislature in the Saco River Corridor Act, 38 M.R.S.A. §951, et seq., (the Act), at a meeting held on August 28th, 2024, at the Porter Town Hall in Porter, Maine, and after a review of the application and supporting documents makes the following findings of fact:

PROJECT DESCRIPTION

1. The applicant is seeking a permit to construct a research pier with associated development, including a dock and float system, shed, and access road.

SITE LOCATION/DESCRIPTION

2. The property is described in the York County Registry of Deeds, Book 1484, Page 145.
3. Location: Lot 4 (Map 52) at 11 Hills Beach Road in Biddeford, Maine.
4. The 49.9-acre lot has approximately 3,500 feet of frontage on the Saco River
5. Most project activities are proposed within 250 feet of the high water line.
    a. The proposed pier, dock and float system, and shed (located on the pier) extend below the mean high water line of the Saco River.
    b. The access road begins slightly beyond the 250-foot buffer; as it turns parallel to the river, it enters the 75-foot buffer and only extends into the 25-foot buffer, where it connects to the pier at the shoreline of the Saco River. The proposed turnaround area is located outside of the 25-foot buffer.
6. The property is located in the General Development District.
7. The 100-year floodplain is limited to the immediate shoreline.

ANALYSIS

Pier Structure

8. The applicant proposes to construct a permanent vehicle-rated pier structure extending from the shore into the Saco River. The proposed pier consists of an approximately 130-foot-long approach section and an 80-foot-long pier head section oriented parallel to the flow of the river. The proposed pier consists of a concrete superstructure on 25 concrete-filled steel pipe piles (7 of which will be socketed to ledge, with the remaining 18 to be driven to ledge), with 30 untreated timber piles for vessel berthing and floating docks, and a pile-supported gangway lifting beam

which will allow the gangway to be removed from the water temporarily. All of the piles are located below the highest annual tide line.

9. The direct impact from all piles totals 84 square feet, while the indirect impact below the highest annual tide line from the pier footprint is 3,579 square feet.
10. A concrete abutment connecting the pier to the access road is located above the highest annual tide line.

Floating Dock System & Gangway

11. The proposed floating dock system consists of one 8 x 24-foot float, one 8 x 26-foot, 10-inch float, and one 12 x 30-foot gangway landing float to provide all-tide vessel access on the west side of the pier. A 6 x 20-foot floating dock (relocated from an existing upstream location on the property) is also proposed to provide a tie-up location for the City of Biddeford Fire Boat on the east side of the pier.
12. The applicant additionally proposes an 80 x 5-foot gangway on the west side of the pier to provide ADA-compliant access to the float system.
13. All floating docks are located below the mean lower low water line and are proposed to be restrained and guided by the timber piles. The proposal will allow vessels to tie up to the pier during all tide levels.
14. The floating dock system has a total indirect impact of 848 square feet, and the gangway has a total indirect impact of 357 square feet.

Pier Buildings

15. An 8 x 10-foot shed is proposed on the east side of the pier head to provide storage for small equipment and to house utility features (electric panels).

Access Drive

16. The applicant proposes to construct a 16-foot-wide paved access road with 2-foot-wide paved shoulders extending from the road near the Marine Science Center around the east side of the Marine Science Center to the proposed pier, as well as associated grading, drainage, and stormwater management features.
17. A turnaround is proposed adjacent to the pier to allow vehicles, including fire trucks, to redirect and exit via the access road.
18. The applicant reports that vehicles will use the existing parking spaces adjacent to the Marine Science Center and that no parking is proposed adjacent to the pier.
19. The applicant states that the proposed access road will provide construction access for the project and allow more staging to take place on land, minimizing impacts to the water.
20. They report that upland work includes stormwater management features that have been designed to meet Maine DEP Chapter 500 standards.

Summary of Statement of Necessity

21. The proposed pier will provide students and researchers year-round access to the river and ocean, including a "living laboratory" located on Ram Island in Saco Bay, which is currently inaccessible during the winter and spring when the seasonal dock and float system aren't in use. The applicant states that the pier will facilitate research activities and scientific and practical exchanges with local, regional, and national marine researchers and industry partners. They note

that the marine research afforded by the proposed year-round access will allow UNE to gather data to guide Maine's response to climate change and inform data-driven decisions impacting aquaculture, fisheries, marine law and policy, and related fields.

General Background

22. The applicant reports that the area where the pier will be located is ledge, with adjacent areas consisting of undeveloped sparsely wooded areas and coastal wetlands.
23. The applicant addressed the §959-A.(A-K) standards in the project description. Where applicable, the staff has added additional details gathered from site plans. In summary:
    a. Degradation of Air and Water Quality – no anticipated impacts.
        i. Vegetation swales and two bioretention filtration ponding areas are proposed along the access road as part of the stormwater management plans.
    b. Harmful Alteration of Wetlands – no anticipated significant impacts (84 square feet of direct impact as noted above in Item 9.)
    c. Increase in Erosion and Sedimentation –
        i. The soils in the project area are not highly erodible, and the pier is located over exposed ledge and ledge with overburden.
        ii. All construction and site alterations will be done in accordance with Maine Erosion and Sedimentation Control Best Management Practices, and the site will be permanently stabilized following completion of construction.
        iii. Site plans note that the siltation boom will be installed for the duration of the construction process.
    d. Danger of Increased Flood Damage –
        i. The structure has been designed to withstand flood impacts, and its elevation takes into account rising sea levels.
    e. Obstruction of Flood Flow – no significant impacts
    f. Damage to Fish and Wildlife Habitat – no significant impacts
    g. Despoliation of Scenic Rural, and Open Space Character of the Corridor –
        i. The project's limit of disturbance encompasses 0.92 acres, with vegetation removal taking place in that envelope to provide a cleared area for the access drive and stormwater facilities.
        ii. 44 trees, including stumps, are proposed for removal within the project area.
        iii. 10 to 25 feet of clearing is proposed on average along either side of the access road. Clearing in several areas is greater to accommodate stormwater structures.
        iv. The remaining open space will be maintained, natural surroundings will be preserved, and scenic views from neighboring properties will not be obstructed.
        v. Given the water-dependent nature of the project, it will be visible from the river.
    h. Overcrowding – no significant impacts
    i. Excessive noise – no significant impacts
    j. Obstruction to Navigation –
        i. The structures will be no closer than 208 feet from the Army Corps of Engineers anchorage area.
        ii. Site plans note that construction activities will not impact the federal navigation channel at any time.

k. Interference with Educational, Scenic, Scientific, Historic, or Archaeological Values of the Areas Designated and Approved for Inclusion within the Resource Protection District
    i. The project is not located in the Resource Protection District, and the applicant states that it will enhance the area's educational value.

24. At the August 14th, 2024, Rules Committee meeting, the Committee expressed concerns about the diminution of the vegetated buffer as a result of the proposed access road construction. They noted that the removal of vegetation in that area could increase the visual impact of the existing Marine Science Center and of the access road itself. The Committee suggested that, if possible (depending on site conditions), the applicant should propose additional plantings between the access road and the shoreline.
25. In response to the Rules Committee comments:
    a. The applicant's agent submitted an updated vegetation plan, which reduced the number of trees proposed for removal by five trees, most of which were in the 25-foot buffer. The updated vegetation plan also clarified the number of trees 8 inches in diameter and greater within the 25-foot buffer that would remain post-construction.
    b. The applicant's agent stated that it was not possible to reduce the width of the access drive to less than the currently proposed 20 feet due to the National Fire Protection Association codes.
    c. The applicant's agent submitted the Stormwater Inspection and Maintenance plans for the project, which will include routine inspections of the systems post-construction to ensure proper function.
26. Staff notes from the August 23rd, 2024, site visit state:
    a. The area has many smaller shrubby vegetation. Numerous large trees are also present, and they are proposed for removal.
    b. A cleared opening would be created between the River and the Marine Science Center.
    c. The proposed clearing (for the road) extends no closer than 25 feet from the mean high water line. However, little vegetation would remain in some areas.
27. At the August 28th, 2024, Commission meeting:
    a. Public comments were heard and considered for impacts on the Commission's standards.
    b. The applicant presented an updated revegetation plan using native plantings for a 1:1 replacement ratio.
    c. The Commission questioned the status of other agencies' review of the project.
        i. The applicant's agent stated that the US Fish and Wildlife Service had advised that the work window be limited to November to April.
    d. The applicant's representatives estimated that the finished pier, including railings, would be approximately 26 feet above the water at low tide.
    e. The applicant's agent clarified that the previously proposed classroom on the pier head had been removed from the proposal.

RELEVANT STANDARDS OF THE ACT

§957-A. Resource Protection District | §957-C. General Development District | §959-A. Requirements for granting permits | §962. General Performance Standards | Chapter 102: Standard Conditions of Approval | Chapter 103: Standards to Address the Environmental Factors

BASED ON THE ABOVE FINDINGS, as determined at a duly noticed Commission Meeting, the Commission draws the following conclusions:

1. The applicant has shown the proposed design to be within the meaning of the Act.
2. The proposed use will not unreasonably involve any of the factors enumerated in §959-A(1)(A)-(K) of the Act.

THEREFORE, the Commission APPROVES the application of the University of New England, #20-491, for a permit to construct a research pier with associated development on the property owned by them, provided the activity is carried out according to the application and UPON THE FOLLOWING CONDITIONS:

1. Standard Conditions of Approval (copy attached).
2. All in-water portions of the existing research pier shall be removed.

This decision, including any of its conditions, may be appealed pursuant to 38 M.R.S. §968, except that no appeal pursuant to 38 M.R.S. §968 shall be taken from a decision of the Commission which decision was made without a public hearing until a request for reconsideration has been submitted to the Commission, and the Commission has made a final determination in the matter. Any person wishing to file an appeal or to request reconsideration must do so within 30 days of the Commission's written decision and order. Requests for reconsideration must be submitted in accordance with applicable Commission regulations. To be valid, all permits must meet all federal, state, and local ordinances and regulations.

DONE AND DATED AT CORNISH, MAINE, THIS 13TH DAY OF SEPTEMBER 2024.

SACO RIVER CORRIDOR COMMISSION

BY: Ben Pinault 9/13/24

Benjamin Pinault, Chairperson — Dated



Registry of Deeds Notarization Form
Saco River Corridor Commission Permit #20-491 University of New England

Acknowledgment

State of Maine
County of York

This record was acknowledged before me on this 13th day of September 2024 by Benjamin Pinault.

Haley L. Lachance
Signature of Notary Public

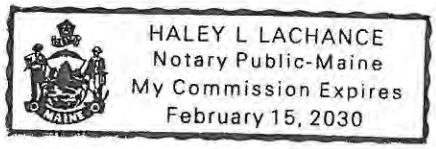

Haley Lachance
Notary Public, State of Maine
My commission expires: February 15, 2030

DEPARTMENT OF THE ARMY
U.S. ARMY CORPS OF ENGINEERS, NEW ENGLAND DISTRICT
NEW ENGLAND DISTRICT OFFICE
696 VIRGINIA ROAD
CONCORD MASSACHUSETTS 01742-2751

March 28, 2025

Regulatory Division

Andrew Phillippe
University of New England
11 Hills Beach Road
Biddeford, Maine 04005
Via Email: aphilippe@une.edu

Dear Mr. Phillippe:

This letter is in response to the application you submitted to the U.S. Army Corps of Engineers (USACE), New England District on June 21, 2024 for a Department of the Army general permit verification. We have assigned this project file number NAE-2024-01628, which you should reference in all correspondence with this office.

A review of the information provided indicates the proposed work includes the construction of a permanent pier consisting of a 28-foot long by 24-foot-wide landing; a 90-foot long by 14-foot-wide approach pier; and an 80-foot long by 24-foot-long pier. Additionally, your project includes a floating dock system consisting of an 80-foot long by 5-foot-wide gangway; a 30-foot long by 12-foot wide float; a 24-foot long by 8-foot wide float; and a 27-foot long by 8-foot wide float, and a 20-foot long by 6-foot wide float. The project is located in the Saco River; at 11 Hills Beach Road, at Latitude 43.458630° and Longitude -70.389050°; in Biddeford, York County, Maine. The work is shown on the enclosed plans titled "University of New England Marine Science Center Pier", on 38 sheets, and dated 8/14/2024.

Based on the information you have provided; we verify that the activity is authorized under General Permit *2. Structures, Floats, and Lifts* of the October 14, 2020, federal permit known as the Maine General Permits (GPs). If the extent of the project area and/or nature of the authorized impacts to waters are modified, a revised application must be submitted to this office for written approval before work is initiated. You can find a copy of these permits at:
https://www.nae.usace.army.mil/Missions/Regulatory/State-General-Permits/

Any deviation from the terms and conditions of the permit, or your submitted plans, may subject the permittee to the enforcement provisions of our regulations. Therefore, in the event changes to this project are contemplated, it is recommended you coordinate with this office prior to proceeding with the work. This office must approve any changes before you undertake them. You must perform this work in compliance

with the terms and conditions of the GPs listed above, and also in compliance with the following special conditions:

1. The permittee shall complete and return the enclosed Work-Start Notification Form to this office at least two weeks prior to the anticipated construction start date.

2. The permittee shall complete and return the enclosed Completion Certification Form to this office at least one month following the completion of the authorized work.

3. You must maintain the activity herein in good condition and in conformance with the terms and conditions of this authorization. You are not relieved of this requirement if you abandon the permitted activity, although you may make a good faith transfer to a third party in compliance with a general condition of these GPs. Should you wish to cease to maintain the authorized activities, or should you desire to abandon it without a good faith transfer, you must obtain a modification of this authorization from this office, which may require restoration of the area.

4. All construction shall be completed in accordance with the limits of construction and construction sequences detailed on the enclosed plan drawings, titled "University of New England Marine Science Center Pier," on a total of 38 sheets, and dated 8/14/2024. If you change the plans or construction methods for work within or adjacent to the Saco River, please contact us immediately to discuss modification of this authorization. The USACE must approve any changes before you undertake them.

5. A "soft start" is required to allow animals an opportunity to leave the project vicinity before sound pressure levels increase. In addition to using a soft start at the beginning of the workday for pile driving, one must also be used at any time following cessation of pile driving for a period of 30 minutes or longer.

a) For impact pile driving: Pile driving will commence with an initial set of three strikes by the hammer at 40% energy, followed by a one-minute wait period, then two subsequent 3-strike sets at 40% energy, with one-minute waiting periods, before initiating continuous impact driving.

b) For vibratory pile installation: Pile driving will be initiated for 15 seconds at reduced energy followed by a one-minute waiting period. This sequence of 15 seconds of reduced energy driving, one-minute waiting period will be repeated two additional times, followed immediately by pile-driving at full rate and energy.

6. The work authorized herein shall not be conducted during the time of year (TOY) restriction of April 10 to November 7 in order to minimize adverse impacts to the Atlantic sturgeon, shortnose sturgeon.

This verification is valid until October 14, 2025. You must commence or be under contract to commence the work authorized herein by October 14, 2025 and complete

the work by October 14, 2026. If not, you must contact this office to determine the need for further authorization before beginning or continuing the activity. It is recommended that you contact this office before this authorization expires to discuss if permit reissuance is a possibility.

This GP verification and any associated authorizations does not preclude the necessity to obtain any other federal, state, or local permits, licenses, and/or certifications, which may be required.

If you have any questions related to this verification or have issues accessing documents referenced in this letter, please contact Jana Jacobson, Project Manager at (207) 233-2117, or by email at Jana.L.Jacobson@usace.army.mil. This agency continually strives to improve our customer service. To better serve you, please complete the Customer Service Survey located at: https://regulatory.ops.usace.army.mil/customer-service-survey/.

Sincerely,



Jon T. Coleman
Team Leader
Technical Regional Execution Center
North Atlantic Division

Enclosures

Cc (w/enclosures):
Tom Saucier, Site Design Associates (via tsaucier@sitedesignassociates.biz)

From: Jacobson, Jana L CIV USARMY CENAE (USA)
To: Vickers, Lisa; Bannon, Dan
Subject: [EXT] RE: UNE Living Shoreline (NAE-2024-02367)
Date: Tuesday, August 12, 2025 6:45:12 AM
Attachments: image001.png

EXTERNAL EMAIL

Good morning,

I confirm that the points below are accurate.

Thank you,

Jana Jacobson
Project Manager
NAD – Technical Regional Execution Center
U.S. Army Corps of Engineers

Mobile: 207-233-2117
https://www.nad.usace.army.mil/
If a response is required outside of usual communications with your Regulatory reviewer, please contact CENAD-Regulatory-TREC@usace.army.mil.

From: Vickers, Lisa <LVickers@geiconsultants.com>
Sent: Wednesday, August 6, 2025 10:54 AM
To: Bannon, Dan <dbannon@geiconsultants.com>; Jacobson, Jana L CIV USARMY CENAE (USA) <Jana.L.Jacobson@usace.army.mil>
Cc: Alexander Owens <aowens13@une.edu>; Pam Morgan <pmorgan@une.edu>
Subject: [Non-DoD Source] RE: UNE Living Shoreline

Hi,
I would just add that the draft USACE Maine GP language for GP #54: Living Shorelines states the following:

As Jana noted, it shouldn't be an issue for the district engineer to waive this criterion but wanted to highlight it for the record.

Lisa

LISA VICKERS
Senior Coastal Professional
GEI
207.466.4689 cell: 207.615.1527
5 Milk Street | Portland, ME 04101

From: Bannon, Dan <dbannon@geiconsultants.com>
Sent: Wednesday, August 6, 2025 10:29 AM
To: Vickers, Lisa <LVickers@geiconsultants.com>; Jacobson, Jana L CIV USARMY CENAE (USA) <jana.l.jacobson@usace.army.mil>
Cc: Alexander Owens <aowens13@une.edu>; Pam Morgan <pmorgan@une.edu>
Subject: Re: UNE Living Shoreline

Hi all,

Thank you for your time this morning, to summarize:

- USACE will proceed with reviewing the application under the current Maine General Permit (GP)
- Application review can continue based on the application materials already submitted by GEI. It is not necessary to withdraw and resubmit the application under the new GP.
- The current GP expires on October 14, 2025 with a one year extension to October 14, 2026 for projects that have commenced or are under contract to commence. By UNE having initiated design, and having GEI under contract for the design and permitting work, USACE would consider that the conditions are satisfied to permit a one year extension.
- If the project has not been completed by the extended expiration on October 14, 2026, UNE will have to request reverification under the new Maine GP. While the new GP has not been finalized yet, based on the draft GP it does not appear that the conditions of the new GP would present any barriers to reverification if this becomes necessary.

Jana - Can you confirm that you agree with the above?

All - Please let me know if you have any questions or additional comments.

Thanks,

Dan

GEI
Daniel Bannon, PE, CFM, BC.PE
Coastal Practice Leader
207.347.2372 cell: 207.671.2583
5 Milk Street | Portland, ME 04101

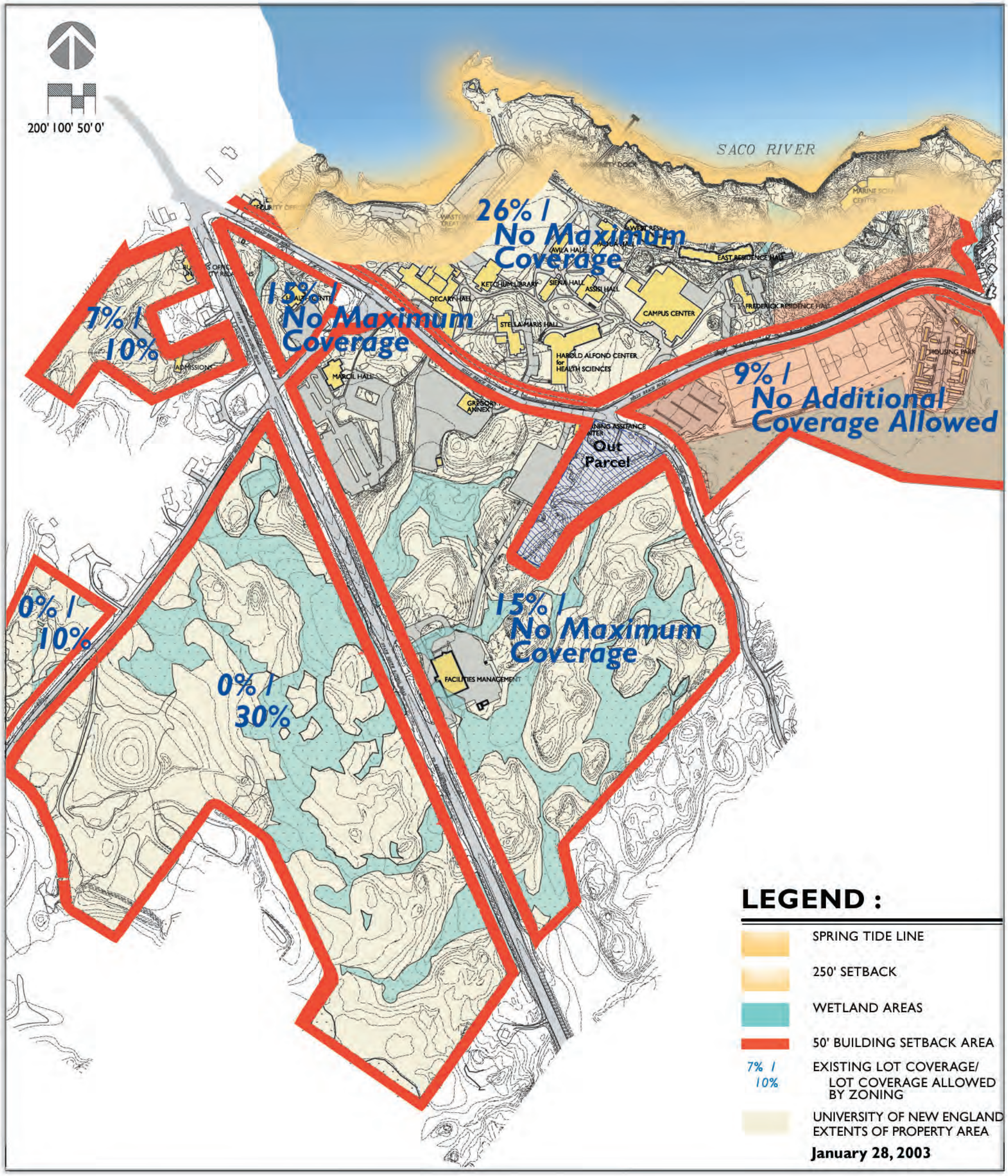

University of New England Campus Master Plan
Concept Campus Plan
Restrictions on Developable Areas

The Cecil Group, Inc.
Campus Master Planning and Landscape Architecture
SYTDesign Consultants
Civil Engineering and Land Surveying

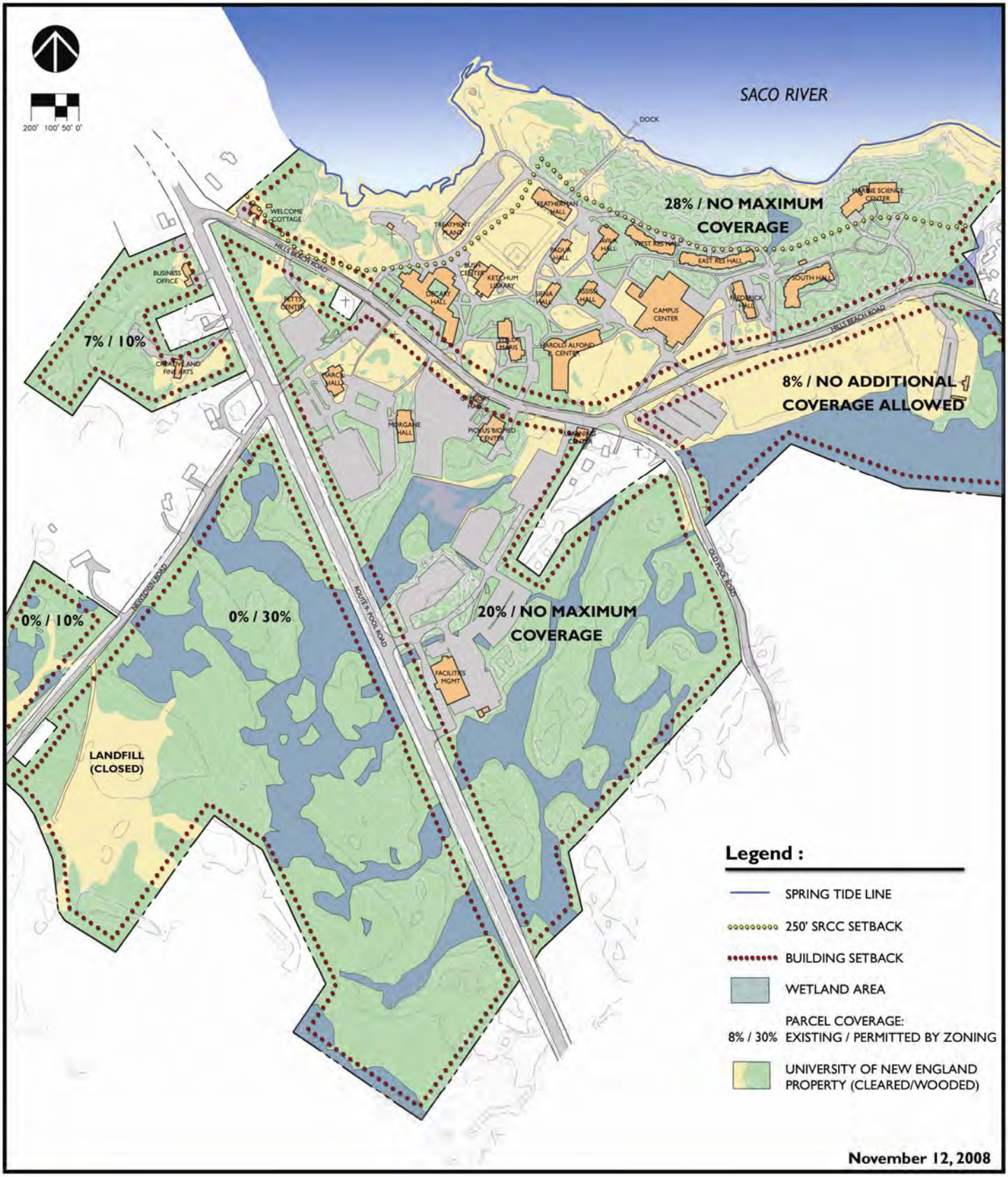

University of New England - Biddeford Campus

Campus Master Plan

Restrictions on Developable Areas

SYTDesign Consultants
Civil Engineering & Landscape Architecture

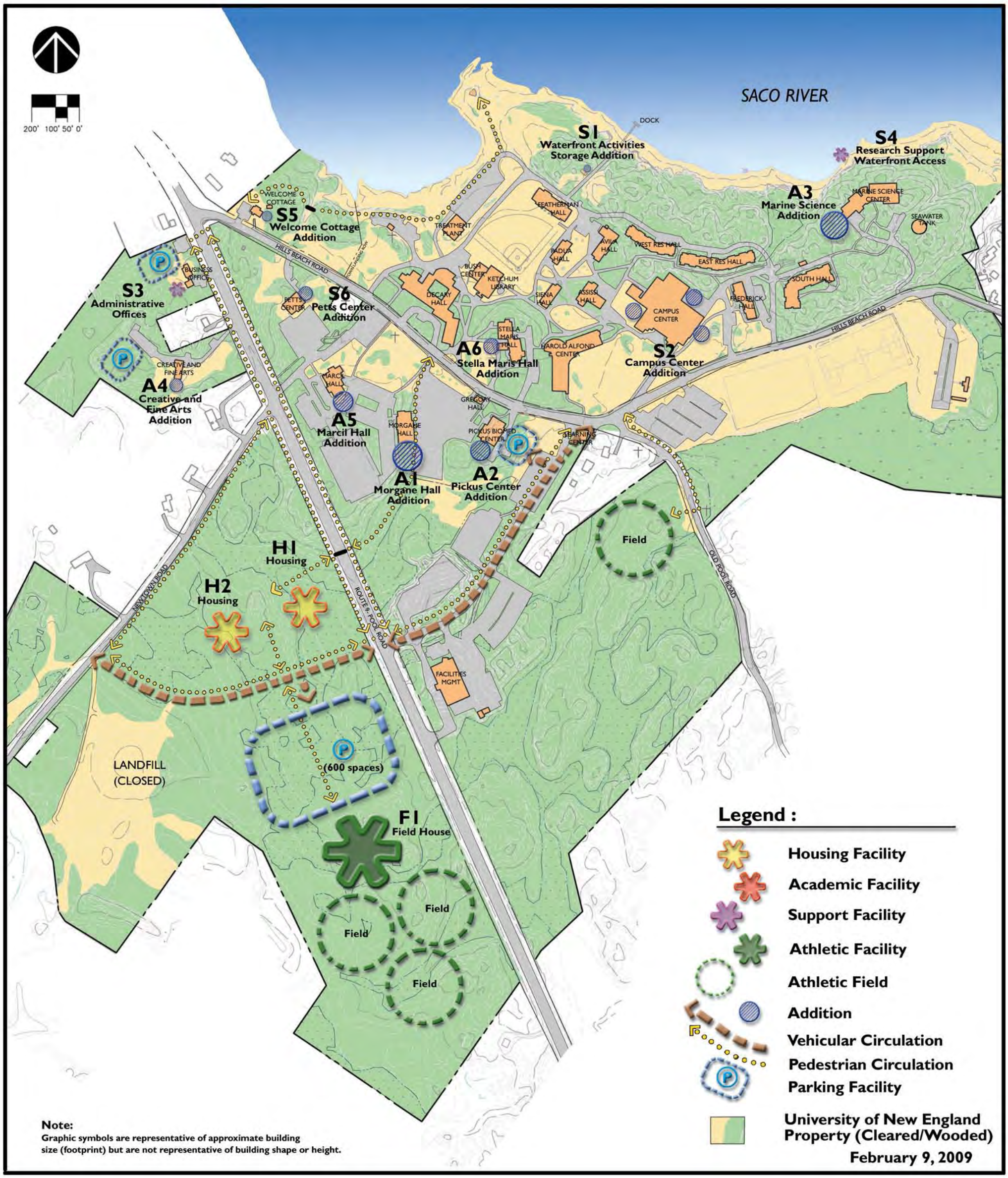

University of New England - Biddeford Campus

Campus Master Plan
Five Year Development Strategy

SYTDesign Consultants
Civil Engineering & Landscape Architecture

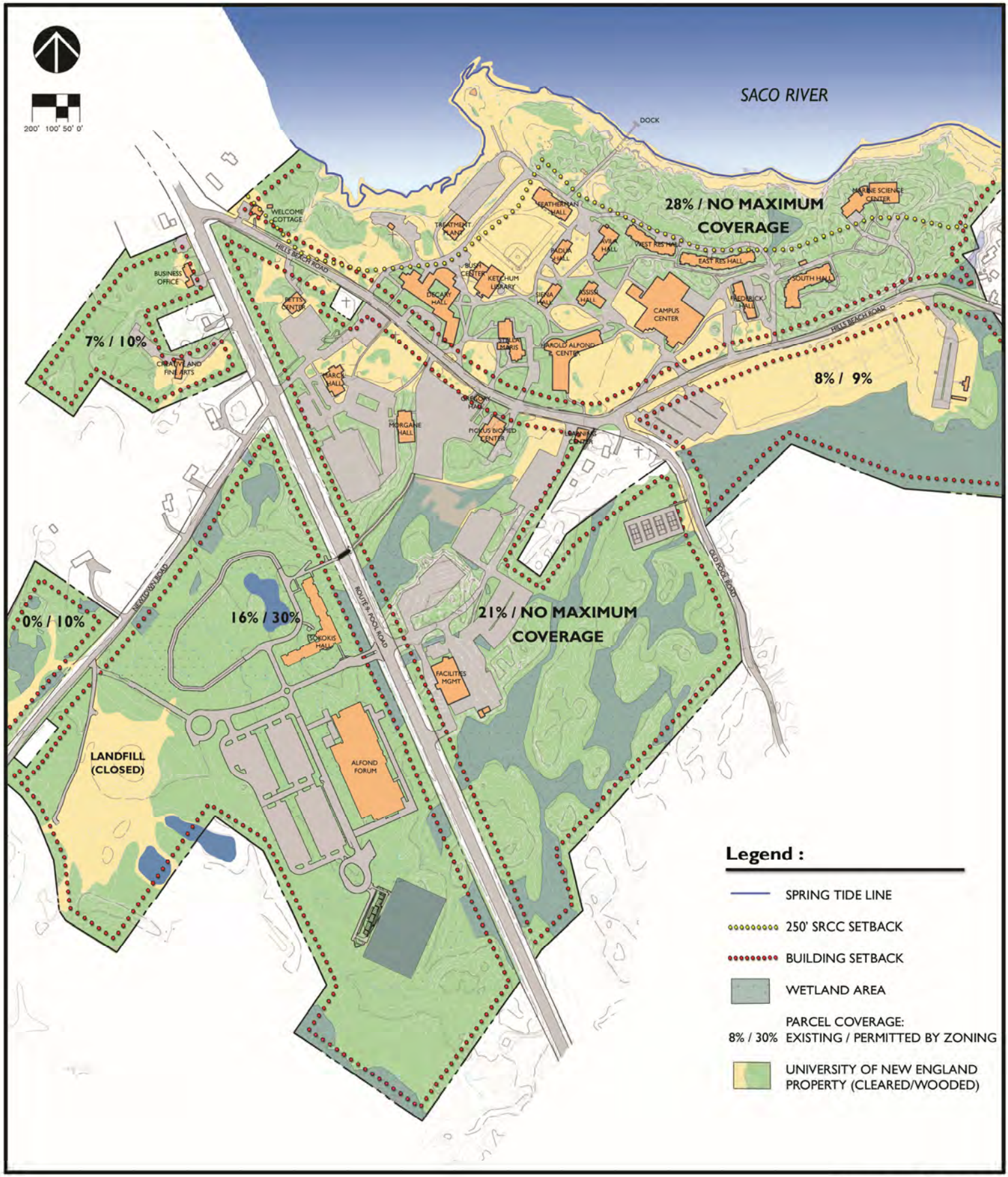

December 16, 2015

UNE

University of New England - Biddeford Campus

Campus Master Plan

Restrictions on Developable Areas

Site Design Associates
Civil Engineering and Land Planning

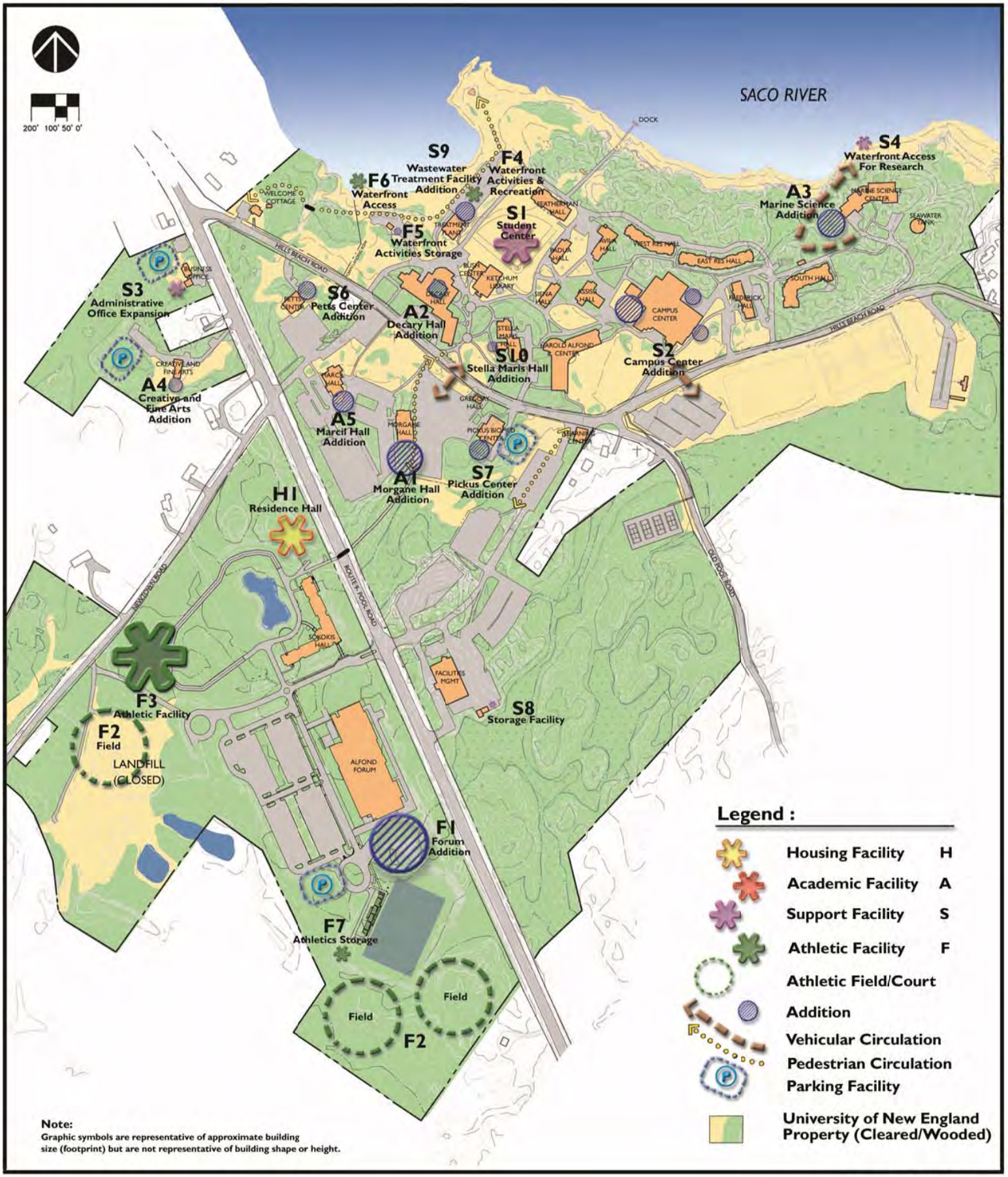

January 21, 2016

UNE

University of New England - Biddeford Campus
Campus Master Plan
Five Year Development Strategy

Site Design Associates
Civil Engineering and Land Planning

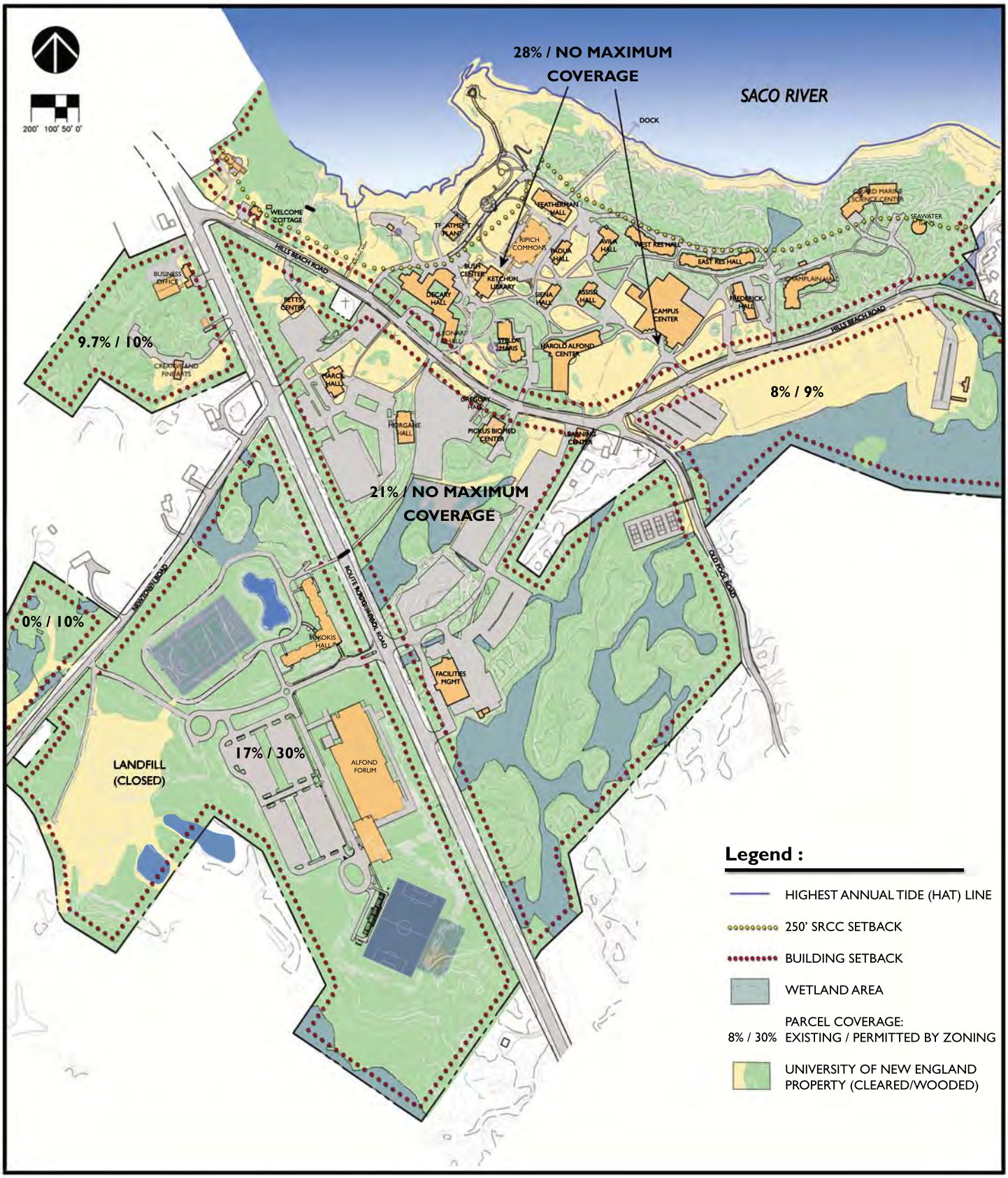

November 10, 2022

UNE

University of New England - Biddeford Campus

Campus Master Plan

Restrictions on Developable Areas

Site Design Associates
Civil Engineering and Land Planning

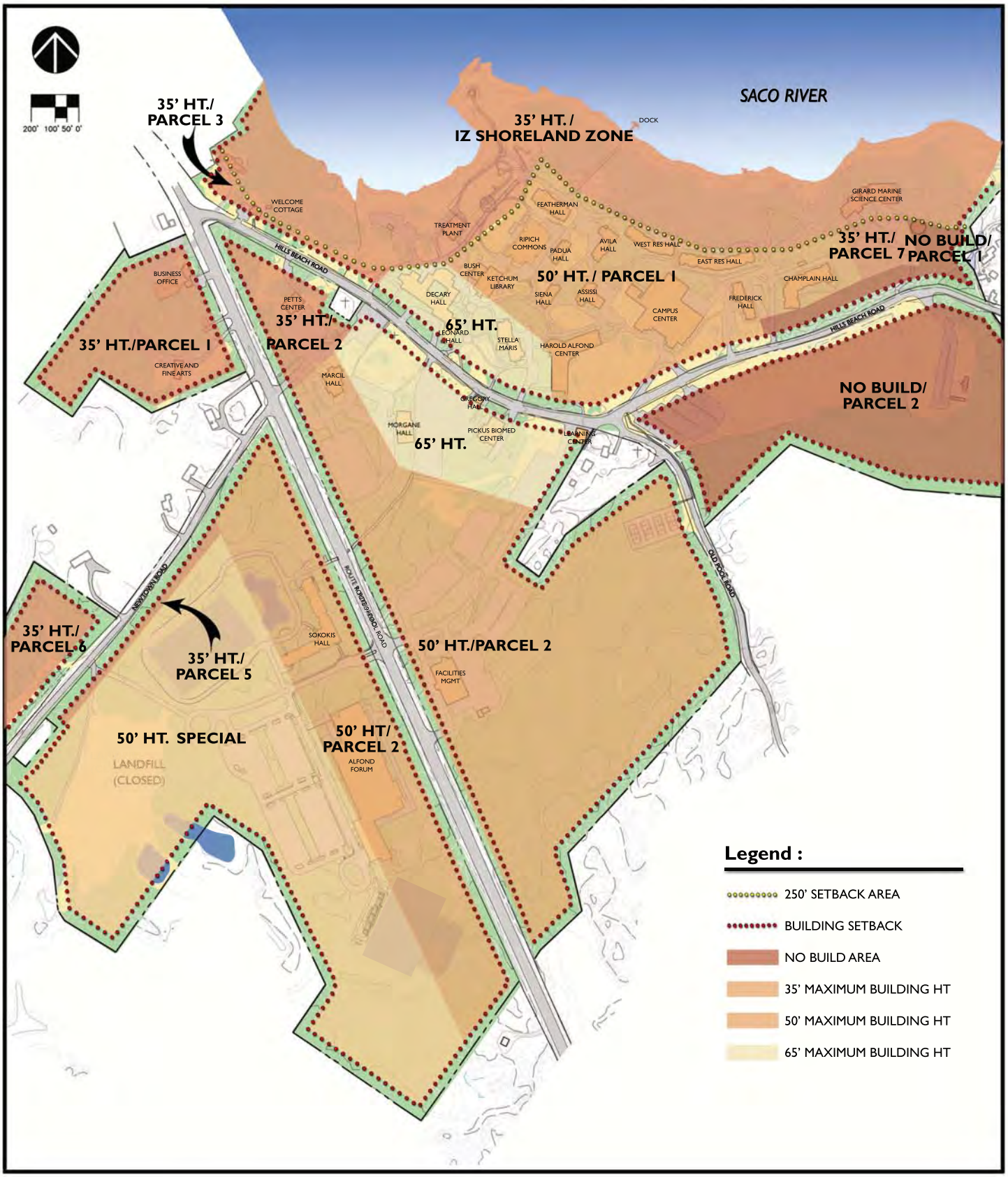

November 10, 2022

University of New England - Biddeford Campus
Campus Master Plan
Restrictions on Developable Areas

Site Design Associates
Civil Engineering and Land Planning

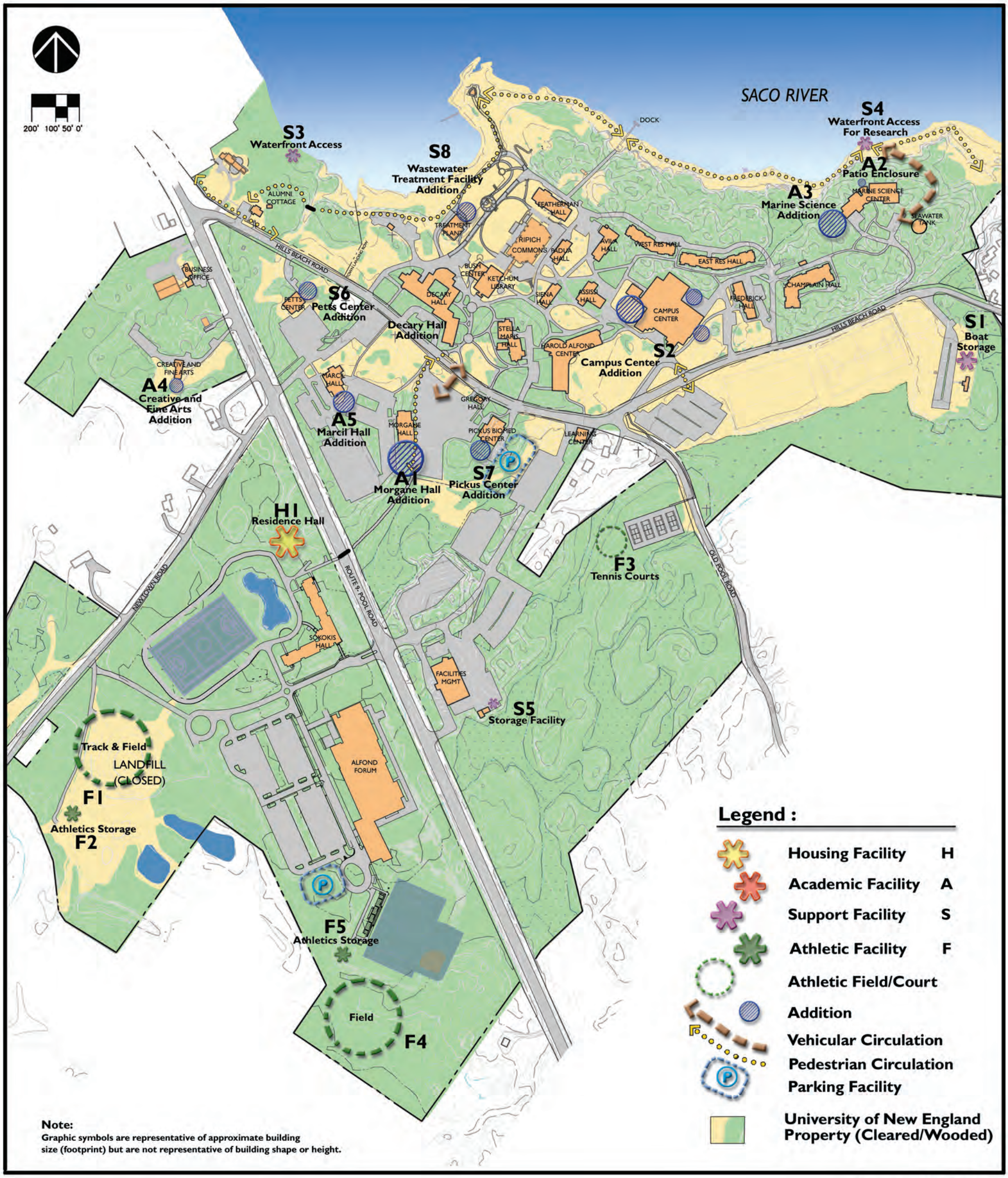

January 18, 2023

University of New England - Biddeford Campus
Campus Master Plan
Five Year Development Strategy

Site Design Associates
Civil Engineering and Land Planning

CITY OF BIDDEFORD, MAINE
PLANNING OFFICE
P. O. BOX 586
BIDDEFORD, ME 04005
Tel (207) 284-9115
Fax (207) 286-9388

NOTICE OF DECISION

March 5, 2009

Alan Thibeault
Director of Campus Planning – Department of Campus Services
University of New England – University Campus
11 Hills Beach Road
Biddeford, ME 04005-9599

Re: University of New England Institutional Zone Master Plan Submission 2008-2012 Planning Board Review and Approval

Dear Alan:

At their regularly scheduled meeting of March 4, 2009 the Biddeford Planning Board reviewed your request for Review and Approval of the University of New England (UNE) Master Plan Submission for 2008 - 2012 located at map 4, lot 4, map 9, lots 1, 13, 14, 15, 20, 21-5, 53-1, 53-2, map 51, lots 12, 13, 18 and map 52, lots 2, 3, and 4 City of Biddeford tax maps in the IN Zone. The University of New England owns the property and you presented the application to the Board.

Based on the presentation and the materials submitted, the Board **approved** the Master Plan Submission for 2008 – 2012, and approved the findings of fact, conditioned on the following:

1. The City and Planning Board may require site specific analysis at the time of any project Site Plan submissions relating to issues deemed necessary, including, but not limited to, traffic, parking, fire and emergency services, wetlands, vernal pools, and wildlife.
2. Upon project submission the UNE will provide project specific vehicle, pedestrian, and bike improvements based on the traffic study and recommendations of the traffic engineer.
3. Although the City acknowledges that the State of Maine DOT will need to issue any applicable traffic permits, the City reserves the right to also require improvements above and beyond those of the Maine DOT.
4. Although the City acknowledges that the State of Maine DEP and Army Corps of Engineers will need to issue any applicable environmental permits, the City

reserves the right to also review and may require improvements or changes to the plans beyond those of the Maine DEP and ACOE.

5. Upon review of individual projects the Fire Department additional hydrants will likely be required for development on the other side of Route 9, specifically along or at the intersection of the new access road and Newtown Road. Specific needs will be assessed as projects are brought forward.
6. The City will evaluate the need and appropriateness of impact fees related to Fire and EMS Services on a project by project basis.
7. UNE is required to conduct a new Solid Waste/Recycling Study based on the methodology used in 1995 except that data collection is required for one week in April 2009 and another October 2009, with option of requiring an additional month if the numbers are not relatively consistent with one another.
8. The applicant shall submit a written description on UNE's Hazardous Waste disposal program.

Appeals of the Planning Board's decision may be made as per the Biddeford Revised Code of Ordinances.

If you have any questions please call the Planning Office at 284-9115.

FOR THE BIDDEFORD PLANNING BOARD

Greg D. Tansley, AICP
City Planner

Cc: P. Boston, Ward 1 Councilor
J. Bubier, City Manager
G. Casavant, Public Works Director
L. Anderson, Hills Beach Association
File

CITY OF BIDDEFORD

PLANNING DEPARTMENT

Greg D. Tansley, A.I.C.P.
205 Main Street
PO Box 586
Biddeford, ME 04005
(207) 284-9115

NOTICE OF DECISION

February 12, 2016

Alan Thibeault
Assistant Vice President for Planning – Department of Campus Services
University of New England – University Campus
11 Hills Beach Road
Biddeford, ME 04005-9599

Re: University of New England Institutional Zone Master Plan Submission 2016-2021

Dear Alan:

At their regularly scheduled meeting of February 3, 2013 the Biddeford Planning Board reviewed your request for review and approval of the University of New England (UNE) Master Plan Submission for 2016-2021 located at Tax Map 4, Lot 4; Tax Map 9, Lots 1, 13, 14, 15, 20, 21-5, 53-1, 53-2; Tax Map 51, Lots 12, 13, 18; and Tax Map 52, Lots 2, 3, and 4 in the IN Zone. The University of New England owns the property and you presented the application to the Board.

Based on the presentation and the materials submitted, the Board **approved** the Master Plan Submission for 2016 – 2021, and approved the Findings of Fact, conditioned on the following:

1. **The City and Planning Board may require site specific analysis at the time of any project Site Plan submissions relating to issues deemed necessary, including, but not limited to, stormwater, traffic, parking, fire and emergency services, wetlands, vernal pools, and wildlife.**
2. **Upon project submission the UNE will provide project specific vehicle, pedestrian, and bike improvements based on the traffic study and recommendations of the traffic engineer.**
3. **Although the City acknowledges that the State of Maine DOT will need to issue any applicable traffic permits, the City reserves the right to also require improvements above and beyond those of the Maine DOT.**
4. **Although the City acknowledges that the State of Maine DEP and Army Corps of Engineers will need to issue any applicable environmental permits, the City reserves**

the right to also review and may require improvements or changes to the plans beyond those of the Maine DEP and ACOE.

5. **Upon review of individual projects by the Fire Department specific needs will be assessed as projects are brought forward on a project by project basis.**
6. **The City will evaluate the need and appropriateness of impact fees related to Fire and EMS Services on a project by project basis.**

Appeals of the Planning Board's decision may be made as per the Biddeford Revised Code of Ordinances.

If you have any questions, please contact me at 284-9115.

FOR THE BIDDEFORD PLANNING BOARD

Greg D. Tansley, A.I.C.P.
City Planner

Cc: Mayor Alan Casavant
M. Swanton, Ward 1 Councilor
J. Bennett, City Manager
T. Milligan, P.E., City Engineer
P. Boston, Hills Beach Association
File

City of Biddeford
Planning Board
May 03, 2023 6:00 PM City Hall
Council Chambers, & Zoom
https://biddeford.zoom.us/j/99254547167?pwd=Z2t5OFo5L01EL3Z3M1UxL2JFYzA1UT09
Webinar ID 992 5454 7167 Passcode 514787

STATUS: Planning Board, Wednesday, May 3, 2023, 6:00 PM, City Council Chambers & Zoom

1. PLEDGE OF ALLEGIANCE

Chair Patoine brought the meeting to order at 6:00 PM

2. DECLARATION OF QUORUM/VOTING MEMBERS

Larry Patoine, Roch Angers, Sean Tarpey, Alexa Plotkin, Susan Deschambault, Stephen Beaudette (Associate Member, Not voting this evening)

3. ADJUSTMENTS TO THE AGENDA

None

4. PLANNER'S BUSINESS

Mr. Galbraith announced that Michael Cantara had resigned from the Planning Board after the last meeting. Susan Deschambault was appointed a regular member of the Planning Board last night to replace Mr. Cantara.

MOTIONS:

Angers-Motion-To elect Ms. Deschambault as the Vice Chair of the Planning Board
Plotkin-Second-Motion passed unanimously
Angers-Motion-To elect Ms. Plotkin as Planning Board Secretary
Tarpey-Second-Motion passed unanimously

Mr. Galbraith has other items to announce/discuss but will do so at the end of the meeting:

- Mr. Galbraith talked to the Board about the project for One Diamond Development. He shared the plans with them early.
- It was decided the Board will take a Site Walk of the One Diamond project on Wednesday the 17th prior to the Planning Board Meeting.
- He mentioned that the Preliminary approval for Hidden Hills is expiring on May 17th and would like to give them an Administrative 6 month extension.
- This was met with resistance. Mr. Tarpey suggested that there have been outsales that have created an illegal subdivision. His suggestion is to let the approval expire and have the applicant reapply from the beginning.
- Ms. Plotkin suggested the City not give the applicant their extension, have him reapply for Preliminary Approval and go from there.
- Mr. Galbraith said he will do more research and bring it back to the Board on the 17th for a decision. Which was the consensus of the Board.

5. CONSENT AGENDA

5.A. Approve Meeting Minutes from April 19, 2023

MOTIONS: 7:10 PM

Tarpey-Motion-To approve the Minutes for April 19th as written
Deschambault-Second-Motion Passed unanimously

6. UNFINISHED BUSINESS

7. NEW BUSINESS

7.A. 2023.17 & 2023.18 Public meeting and take comments regarding the UNE Master Plan and dimensional standards for the IN rezone for the University of New England. The rezone dimensions will affect 1 Hills Beach Road, Map 51, Lot 11; 583 Pool Street, Map 51, Lot 10 and 590 Pool Street, Map 51, Lot 18-1 in the IN zone.

- Alan Thibeault, Vice President of University Operations for UNE represented the applicant
- One person from the public spoke reminding the staff to complete the procedures when this is approved.
  MOTIONS: 6:10 PM
  Angers-Motion-to Approve the 2023-2027 Institutional Master Plan and Dimensional Standards as presented with the understanding that staff will update the Zoning Map & Dimensional Table.
  Deschambault-Second-Motion passed unanimously

7.B. 2023.23 Shoreland Zoning Permit Application (GPE) for GL Beamon Trust to remove and reconstruct the existing non-conforming single family home at 6 Sand Dollar Haven (Tax Map 55, Lots 33) in the Coastal Residential and shoreland overlay zone.

- Mike Morse, Senior Environmental Consultant of Archipelago represented the applicant.
- The lot is approximately ½ acre.
- The plan is to remove a portion of the structure closest to the HAT line which is nonconforming and reconstruct that portion making it conforming.
- There is no other place to relocate the structure.
- There will be a change to the Conditions of Approval to be that the erosion & sedimentation fence will go up prior to construction.
- No public comments
- There was an explanation of the difference of a sea and a retaining wall.
- The existing septic was scoped and is working fine but they do not have then paperwork regarding the system. A new system has been designed and will be installed.
- This project has received DEP approval.
  MOTIONS: 6:23 PM
  Angers-Motion- To approve the Shoreland Zoning Permit (GPE) application for the proposal located on 6 Sand Dollar Haven (Tax Map 55, Lots 33), within the Coastal Residential (CR) zoning district and in the Shoreland Overlay of Limited Residential & Resource Protection, as presented with the adoption of the Findings of Fact (FOF) and Conditions of Approval (COA), with the caveat that the silt fence does not have to be installed until construction is to begin.
  Deschambault-Second-Motion passed unanimously

7.C. 2023.23 Greatest Practical Extent for Peter Cameron Hyzer & Jennifer Hyzer to rebuild an existing house at 280 Hills Beach Road-Building 1 (Tax Map 56, Lot 18) in the Shoreland CR/RP zone.

- Chris Garland from Caleb Johnson/Woodhull represented the applicant.
- He mentioned that the original approval was in January 2022, but has expired
- The septic design has been revised.
- The house has been removed but the barn is still intact.
- The plan is to rebuild the house
- There were no public comments
  MOTIONS: 6:29 PM
  Angers-Motion- To approve the request of Cameron Hyzer & Jennifer Hyzer to rebuild an existing house at 280 Hills Beach Road-Building 1 (Tax Map 56, Lot 18) in the Shoreland CR/RP zone (Case # 2023.23) which meets the Greatest Practical Extent criteria as presented with the adoption of the Findings of Fact (FOF) and Conditions of Approval (COA).
  Plotkin-Second-Motion passed unanimously

7.D. 2023.20 Sketch Plan Application for Travis and Lisa Wing to build a private way to standard for 3 new single family home lots and the existing lot (4 in total). Property is located at 1 Moxie Lane (Tax Map 77, Lot 22) in the SR1 & RF zones and the shoreland overlay.

- Paul Gadbois represented the applicants
- The applicants would like to create 3 new lots on a private way called Moxie Lane.
- They have received a Letter of Adequacy from the water company.
- The applicant will amend Moxie Lane to make it easier for the Fire Department to get in and out.
- The applicant conveyed 27,000 SF to 161 Guinea Road
- There is an existing septic easement benefitting 151 Guinea Road the applicant may convey that land in the future.
- No public comments
  MOTIONS: 6:38 PM
  Angers-Motion- To approve the Sketch Plan application for the proposal located at 1 Moxie Lane (Tax Map 77, Lot 22), within the Suburban Residential & Rural Farm (SR 1 & RF) zones, as well as shoreland overlay zone
  Deschambault-Second-Motion passed unanimously

7.E. 2023.22 Site Plan Application for Brown Dog Carriers to build a commercial facility for company headquarters for their trucking company. Property is located on Landry Street (Tax Map 74, Lots 11 & 10-2) in the Industrial 2 zone.

- Greg Morin the owner of the business & Andy Morrill of BH2M represented the project.
- Mr. Morin spoke of how he is a native of Biddeford and continues to raise his family here.

- The applicant is aware that he needs DEP permitting & a permit from the Army Corp of Engineers.
- The applicant does plan to put a stockade fence around the property.
- There will no maintenance will be conducted on the fleet on the premises.
- Vehicles will be washed off site.
- Mark Hampton was hired to do a wetland delineation and noted there are no wetlands on the site.
- The shed on one of the properties will be relocated.
- There were no public comments.
- Deschambault & Angers wanted confirmation that the engineering comments were satisfied. This is a preliminary application and all comments will be satisfied by final application.
- Deschambault thanked Mr. Morin for his participation in Wreaths Across America
- The hours of the business is 24/7 but the vehicular traffic will occur between the hours of 8:00 AM-4:00 PM.
- The vehicles are driven in and oriented in the parking lot in a way not to expose the neighbors to the headlights.
  MOTIONS: 7:00PM
  Angers-Motion- To approve the Preliminary Site Plan application for the proposal located on Landry Street (Tax Map 74, Lots 11 & 10-2), within the Industrial 2 (I-2) zoning district, as presented with the adoption of the Findings of Fact (FOF) and Conditions of Approval (COA).
  Deschambault-Second-Motion passed unanimously

8. ADJOURN: 7:35 PM

_____ _____

Planning Board Chairman Date

These minutes are summary and are not intended to be verbatim. Archived meetings are viewable on the City's website: www.biddefordmaine.org.

Fecteau, Roby

From: Ron Schneider <rschneider5@une.edu>
Sent: Thursday, November 6, 2025 8:58 AM
To: Lisa A. Gilbreath; Fecteau, Roby
Cc: Hills Beach John; Center, Harry
Subject: RE: EXT: ZBA Agenda

Caution: This is an external email. Please take care when clicking links or opening attachments. When in doubt, contact the IT Department

Good morning,

Thank you. With that clarification, it is important to raise the issue of the identity of the appellant, which was not an apparent issue at the time of the parties' submissions. Mr. Schafer has stated that Matt Haas will make the presentation of his submission. Further, there has been reference to "Appellants." There is, however, one Appellant, who is John Schafer. Mr. Schafer's use of "et al" does not permit the addition of any other person into the process. "Et al" is a abbreviation to indicate the existence of already identified parties and not a license to add parties at will.

I believe that it is important for the parties to be heard on this issue, or at least to have the issue recognized and considered specifically by the ZBA during the preliminary business section of the agenda.

I appreciate your consideration.

With regards,

Ron

Ron Schneider, Esq
General Counsel and Vice President of Legal Affairs

University of New England
11 Hills Beach Road
Biddeford, Maine 04005

207-602-2924



From: Lisa A. Gilbreath <lgilbreath@PierceAtwood.com>
Sent: Wednesday, November 5, 2025 4:56 PM
To: Fecteau, Roby <Roby.Fecteau@Biddefordmaine.org>; Ron Schneider <rschneider5@une.edu>
Cc: Hills Beach John <hillsbeachjohn@yahoo.com>; Center, Harry <hcenter@woodedlaw.com>
Subject: RE: EXT: ZBA Agenda

Preliminary Business generally is conducted by the Board only, but the Chair may allow argument on such preliminary issues. If the Board decides that the applicant has met the preliminary requirements during the Preliminary Business section of the agenda, then it can proceed with its substantive review including hearing argument by the parties. Should the board determine that it does not have jurisdiction or that the applicant has not met any preliminary requirements (e.g., a complete application was not timely submitted, the applicant lacks standing, etc.) the Board will at that point take a vote.

Best,
Lisa

Lisa A. Gilbreath	Partner
PIERCE ATWOOD LLP	**PH** 207.791.1397

From: Fecteau, Roby <Roby.Fecteau@Biddefordmaine.org>
Sent: Wednesday, November 5, 2025 4:44 PM
To: Ron Schneider <rschneider5@une.edu>; Lisa A. Gilbreath <lgilbreath@PierceAtwood.com>
Cc: Hills Beach John <hillsbeachjohn@yahoo.com>; Center, Harry <hcenter@woodedlaw.com>
Subject: RE: EXT: ZBA Agenda

EXTERNAL SENDER: Use caution before clicking any link or attachment.

I will defer to Lisa on your question.

Roby Fecteau
Director of Code Enforcement &
Emergency Management
City of Biddeford
205 Main Street Suite 104
Monday- Tuesday 7:00 am – 5:00 pm
Wednesday- Thursday 8:00 am- 4:00 pm
Friday- Closed

From: Ron Schneider <rschneider5@une.edu>
Sent: Wednesday, November 5, 2025 4:26 PM
To: Fecteau, Roby <Roby.Fecteau@Biddefordmaine.org>; Lisa A. Gilbreath <lgilbreath@pierceatwood.com>
Cc: Hills Beach John <hillsbeachjohn@yahoo.com>; Center, Harry <hcenter@woodedlaw.com>
Subject: RE: EXT: ZBA Agenda

Caution: This is an external email. Please take care when clicking links or opening attachments. When in doubt, contact the IT Department

Good afternoon,

Thank you for the clarification of the order of presentation, which makes sense to me. I am interested in understanding what role if any the parties would have in the preliminary business section of the agenda. Particularly, with respect to

the summary of the appeal, jurisdiction/type of review, and standing, will the ZBA make determinations on those issues during that portion of the agenda and, if so, will the parties be heard on those issues prior to the ZBA making decisions?

Thank you for your time.

With regards,

Ron

Ron Schneider, Esq
General Counsel and Vice President of Legal Affairs

University of New England
11 Hills Beach Road
Biddeford, Maine 04005

207-602-2924



From: Fecteau, Roby <Roby.Fecteau@Biddefordmaine.org>
Sent: Wednesday, November 5, 2025 2:59 PM
To: Ron Schneider <rschneider5@une.edu>; Lisa A. Gilbreath <lgilbreath@pierceatwood.com>
Cc: Hills Beach John <hillsbeachjohn@yahoo.com>; Center, Harry <hcenter@woodedlaw.com>
Subject: RE: EXT: ZBA Agenda

As the staff liaison to the zoning board, I laid it out as the appellants will present. Then Attorney Center representing the Planning board, then UNE.

If I made a mistake, I'm sure Attorney Gilbreath will advise the board.

Roby Fecteau
Director of Code Enforcement &
Emergency Management
City of Biddeford
205 Main Street Suite 104
Monday- Tuesday 7:00 am – 5:00 pm
Wednesday- Thursday 8:00 am- 4:00 pm
Friday- Closed

From: Ron Schneider <rschneider5@une.edu>
Sent: Wednesday, November 5, 2025 2:50 PM
To: Fecteau, Roby <Roby.Fecteau@Biddefordmaine.org>; Lisa A. Gilbreath <lgilbreath@pierceatwood.com>
Cc: Hills Beach John <hillsbeachjohn@yahoo.com>; Center, Harry <hcenter@woodedlaw.com>
Subject: RE: EXT: ZBA Agenda

Caution: This is an external email. Please take care when clicking links or opening attachments. When in doubt, contact the IT Department

Good afternoon,

Thank you for sending the agenda. Are you able to clarify when the parties would make a presentation?

With regards,

Ron

Ron Schneider, Esq
General Counsel and Vice President of Legal Affairs

University of New England
11 Hills Beach Road
Biddeford, Maine 04005

207-602-2924

UNE UNIVERSITY OF NEW ENGLAND
INNOVATION FOR A HEALTHIER PLANET

From: Fecteau, Roby <Roby.Fecteau@Biddefordmaine.org>
Sent: Thursday, October 30, 2025 12:37 PM
To: Hills Beach John <hillsbeachjohn@yahoo.com>; Ron Schneider <rschneider5@une.edu>; Center, Harry <hcenter@woodedlaw.com>
Cc: Lisa A. Gilbreath <lgilbreath@pierceatwood.com>
Subject: EXT: ZBA Agenda

This email originated from outside of UNE.

Good afternoon All:

Just wanted you aware that I have finished the agenda and it is posted on the City's website: Below is a link to see everything posted

https://biddefordme.portal.civicclerk.com/event/3141/overview

Roby Fecteau
Director of Code Enforcement &
Emergency Management
City of Biddeford
205 Main Street Suite 104
Monday- Tuesday 7:00 am – 5:00 pm
Wednesday- Thursday 8:00 am- 4:00 pm

Fecteau, Roby

From: Ron Schneider <rschneider5@une.edu>
Sent: Wednesday, November 12, 2025 11:59 AM
To: Fecteau, Roby; Lisa A. Gilbreath
Cc: Hills Beach John; Center, Harry
Subject: RE: EXT: ZBA Agenda

Caution: This is an external email. Please take care when clicking links or opening attachments. When in doubt, contact the IT Department

Good morning,

I am writing in response to the reference to those parts of the Code that reference the Institutional Zone and an institutional master plan. Section 11(A) states, "Any university use or other use conducted by a college or university in an institutional zone shall be consistent with an institutional master plan approved by the Planning Board in accordance with this section." (Part III, Article V, Section 11(A).)

The Code defines "university uses" and states that a university use is, among things, activities that "If located in the institutional zone, are consistent with the most recent institutional master plan approved by the Planning Board." (Part III, Art II, Section 2 of the Code.)

The most recent institutional master plan was approved by the Planning Board on May 3, 2023.

The most recent institutional master plan should be located in the Planning Department, and I ask for that 2023 institutional master plan to be referenced and made available, as opposed to a 2003 institutional master plan that has been superseded multiple times since 2003.

Thank you.

With regards,

Ron

Ron Schneider, Esq
General Counsel and Vice President of Legal Affairs

University of New England
11 Hills Beach Road
Biddeford, Maine 04005

207-602-2924

UNE UNIVERSITY OF NEW ENGLAND
INNOVATION FOR A HEALTHIER PLANET

From: Harry Center <hcenter@woodedlaw.com>
Sent: Tuesday, November 11, 2025 11:46 AM
To: Fecteau, Roby <Roby.Fecteau@Biddefordmaine.org>; Ron Schneider <rschneider5@une.edu>; Lisa A. Gilbreath <lgilbreath@pierceatwood.com>
Cc: Hills Beach John <hillsbeachjohn@yahoo.com>
Subject: RE: EXT: ZBA Agenda

Everyone:

Upon further reflection and in preparation for Thursday evening, I am attaching two portions of the City's Land Use Ordinance. The first attachment sets forth the establishment of the Institutional Zone, with the second page stating that *"All university use...shall conform to an institutional master plan.."* (Art. V, (l)).

The second attachment is the Ordinance section enabling the master plan as a land use ordinance. (Art. V, § 11).

Yesterday I sent everyone the language directly from the master plan itself, referencing the 250 foot no development zone.

Harry Center

Harry B. Center, II, Esq.
Woodman Edmands
234 Main Street
P.O. Box 468
Biddeford, Maine 04005
(207) 284-4581

CONFIDENTIALITY NOTICE: The contents in this message and any attachments are legally privileged and confidential and are intended only for the use of the designated recipient(s) stated above. If you are not the intended recipient, you may not review, copy or distribute either this message or any attachments. If you have received this message in error, please notify the sender immediately by telephone or reply e-mail and delete the entire message and any attachments. Thank you for your cooperation.

From: Harry Center
Sent: Monday, November 10, 2025 5:33 PM
To: Fecteau, Roby <Roby.Fecteau@Biddefordmaine.org>; Ron Schneider <rschneider5@une.edu>; Lisa A. Gilbreath <lgilbreath@pierceatwood.com>
Cc: Hills Beach John <hillsbeachjohn@yahoo.com>
Subject: RE: EXT: ZBA Agenda

Roby:

May I request that you ask the ZBA legal counsel if my motion may be heard prior to consideration of the Appellant's arguments?

I feel that it would be a waste of resources if the arguments on the merits were heard if the matter is going to be remanded.

I respectfully suggest that if the ZBA does remand the application, then a potential aggrieved party may appeal after the Planning Board has acted on the application, with consideration to the Master Plan as well as the findings in the August, 2025 decision.

Thank you,

Harry Center

Harry B. Center, II, Esq.
Woodman Edmands
234 Main Street
P.O. Box 468
Biddeford, Maine 04005
(207) 284-4581

CONFIDENTIALITY NOTICE: The contents in this message and any attachments are legally privileged and confidential and are intended only for the use of the designated recipient(s) stated above. If you are not the intended recipient, you may not review, copy or distribute either this message or any attachments. If you have received this message in error, please notify the sender immediately by telephone or reply e-mail and delete the entire message and any attachments. Thank you for your cooperation.

From: Fecteau, Roby <Roby.Fecteau@Biddefordmaine.org>
Sent: Monday, November 10, 2025 5:21 PM
To: Harry Center <hcenter@woodedlaw.com>; Ron Schneider <rschneider5@une.edu>; Lisa A. Gilbreath <lgilbreath@pierceatwood.com>
Cc: Hills Beach John <hillsbeachjohn@yahoo.com>
Subject: RE: EXT: ZBA Agenda

Good afternoon All:

After consulting with the Zoning Boards Attorney, I have added these two documents to the agenda under.

4.b Planning Board Woodman Edmands; Attorney Harry Center

Roby Fecteau
Director of Code Enforcement &
Emergency Management
City of Biddeford
205 Main Street Suite 104
Monday- Tuesday 7:00 am – 5:00 pm
Wednesday- Thursday 8:00 am- 4:00 pm

Friday- Closed

From: Harry Center <hcenter@woodedlaw.com>
Sent: Monday, November 10, 2025 9:56 AM
To: Fecteau, Roby <Roby.Fecteau@Biddefordmaine.org>; Ron Schneider <rschneider5@une.edu>; Lisa A. Gilbreath <lgilbreath@pierceatwood.com>
Cc: Hills Beach John <hillsbeachjohn@yahoo.com>
Subject: RE: EXT: ZBA Agenda

Caution: This is an external email. Please take care when clicking links or opening attachments. When in doubt, contact the IT Department

Everyone:

This morning I have spoken with John Schafer and Ron Schneider, and made them aware of the attached filing. I am sending this as part of this email chain to ensure that all necessary participants received the attached.

Please let me know if you have any questions or need anything regarding this Request.

Roby- If you need a hard copy, I can walk one across the street to you this morning.

Thank you,

Harry Center

Harry B. Center, II, Esq.
Woodman Edmands
234 Main Street
P.O. Box 468
Biddeford, Maine 04005
(207) 284-4581

CONFIDENTIALITY NOTICE: The contents in this message and any attachments are legally privileged and confidential and are intended only for the use of the designated recipient(s) stated above. If you are not the intended recipient, you may not review, copy or distribute either this message or any attachments. If you have received this message in error, please notify the sender immediately by telephone or reply e-mail and delete the entire message and any attachments. Thank you for your cooperation.

From: Fecteau, Roby <Roby.Fecteau@Biddefordmaine.org>
Sent: Wednesday, November 5, 2025 2:59 PM
To: Ron Schneider <rschneider5@une.edu>; Lisa A. Gilbreath <lgilbreath@pierceatwood.com>
Cc: Hills Beach John <hillsbeachjohn@yahoo.com>; Harry Center <hcenter@woodedlaw.com>
Subject: RE: EXT: ZBA Agenda

As the staff liaison to the zoning board, I laid it out as the appellants will present. Then Attorney Center representing the Planning board, then UNE.

If I made a mistake, I'm sure Attorney Gilbreath will advise the board.

Roby Fecteau
Director of Code Enforcement &
Emergency Management
City of Biddeford
205 Main Street Suite 104
Monday- Tuesday 7:00 am – 5:00 pm
Wednesday- Thursday 8:00 am- 4:00 pm
Friday- Closed

From: Ron Schneider <rschneider5@une.edu>
Sent: Wednesday, November 5, 2025 2:50 PM
To: Fecteau, Roby <Roby.Fecteau@Biddefordmaine.org>; Lisa A. Gilbreath <lgilbreath@pierceatwood.com>
Cc: Hills Beach John <hillsbeachjohn@yahoo.com>; Center, Harry <hcenter@woodedlaw.com>
Subject: RE: EXT: ZBA Agenda

Caution: This is an external email. Please take care when clicking links or opening attachments. When in doubt, contact the IT Department

Good afternoon,

Thank you for sending the agenda. Are you able to clarify when the parties would make a presentation?

With regards,

Ron

Ron Schneider, Esq
General Counsel and Vice President of Legal Affairs

University of New England
11 Hills Beach Road
Biddeford, Maine 04005

207-602-2924

UNE UNIVERSITY OF NEW ENGLAND
INNOVATION FOR A HEALTHIER PLANET

From: Fecteau, Roby <Roby.Fecteau@Biddefordmaine.org>
Sent: Thursday, October 30, 2025 12:37 PM
To: Hills Beach John <hillsbeachjohn@yahoo.com>; Ron Schneider <rschneider5@une.edu>; Center, Harry <hcenter@woodedlaw.com>

Cc: Lisa A. Gilbreath <lgilbreath@pierceatwood.com>
Subject: EXT: ZBA Agenda

This email originated from outside of UNE.

Good afternoon All:

Just wanted you aware that I have finished the agenda and it is posted on the City's website: Below is a link to see everything posted

https://biddefordme.portal.civicclerk.com/event/3141/overview

Roby Fecteau
Director of Code Enforcement &
Emergency Management
City of Biddeford
205 Main Street Suite 104
Monday- Tuesday 7:00 am – 5:00 pm
Wednesday- Thursday 8:00 am- 4:00 pm
Friday- Closed

UNIVERSITY OF NEW ENGLAND

INSTITUTIONAL ZONE
MASTER PLAN SUBMISSION
2023-2027

Biddeford, Maine

February 27, 2023

Table of Contents

Section

0 Introduction

1 Mission Statement and Institutional Objectives

2 Existing Physical Conditions

3 Programs and Activities

4 Educational, Research, Residential, Support and Athletic Facilities

5 Parking and Traffic

6 Water and Sewer Services

7 Municipal and Community Services

8 Neighborhood Impact

9 Community Outreach

10 Conceptual Development Program

Appendix A Development and Design Standards

Section

1 Landscaping Design Standards

2 Exterior Lighting Standards

3 Signage Standards

4 Pedestrian and Bicycle Facilities

5 Noise

6 Architectural Design and Details

7 Protection of Scenic Views

Appendix B Plans and Drawings (Full Size)

Institutional Zone Ordinance

0 -**Introduction**

The University of New England is submitting the following "Institutional Zone Master Plan" as required by the City of Biddeford's Land Development Regulations, Institutional Zone (IN) Art. V, Sec 10, E. A copy of this zoning ordinance is included at the rear of the Appendix of this the submission.

For the ease of the reader, each item in the Institutional Zone Master Plan Submission requirements appears in italics, exactly as it is printed in the actual zoning ordinance, and is followed by the University's response. This format has been chosen to allow the reader to know what the requirements are as they read each section of the report. All plans and drawings are located at the rear of each relevant section of the report, in a reduced 11" x 17" format, or a note has been provided to direct the reader to the appropriate location of the relevant plan or drawing. Full sized plans are located in *Appendix B*.

The information presented in this five-year development strategy plan is conceptual only and represents the University's best efforts at outlining a direction for the physical development of the Biddeford campus, and may well require adjustment over the next several years as the University's needs continue to evolve. In addition, it is unlikely that each and every potential building and facility identified in the *Campus Master Plan – Five Year Development Strategy* plan will actually be developed within the five year time frame. The actual implementation of the building program will be driven by ongoing and continuously developing institutional needs and financial resources to initiate each individual building project.

1-**Mission Statement and Institutional Objectives**

(a) Present UNE Mission Statement

Mission, Vision and Core Values

The University of New England is directed by its Mission, Vision Statement and Core Values. These were utilized to create the Strategic Plan 2018-2023, ***Our World, Our Future***.

Mission

The University of New England prepares students to thrive in a rapidly changing world and, in so doing, to improve the health of people, communities, and our planet.

Vision

We will realize this mission by committing to a distinctive approach to education that will make UNE among the most experientially driven institutions of higher education in the nation. We will provide teaching and learning that conjoins problem-based and hands-on learning, liberal education, and professional training to immerse students in an educational experience that prepares them with:

- Habits of mind, such as cultural, quantitative, and information literacy, critical thinking, tolerance for ambiguity, and problem solving;
- Discipline-based knowledge in their chosen programs of study; and
- Professional competencies, including emotional intelligence, the ability to collaborate in diverse teams, communicate persuasively, and be a thoughtful leader.

We will be an institution that challenges students to learn broadly, master their professional skills, and ask probing questions. In this way, they will prepare themselves for further study and successful careers, deeply rewarding lives, and meaningful contributions to their communities and the world.

Core Values

We are guided by the following values, essential to the culture of the UNE community.

Student Centeredness - We put the aspirations, needs, and success of our students at the center of all we do. Diversity, Inclusion, Connection We believe the benefits of a richly varied campus community arise not only from the diversity of its people but also from a sense of belonging and the context this creates to explore and celebrate differences in backgrounds, experiences, and perspectives, underpinned by a sense of cultural humility and a commitment to ethical ideals.

Relentless Inquiry - We take nothing for granted and view thoughtful—even uncomfortable—questioning as essential to the pursuit of knowledge, contribution to society, and a life worth living. Our commitment to University-wide academic freedom is fundamental to this value.

Boundary Crossing - Solutions to the complex and varied challenges we face in our personal and professional lives, our communities, and society will not be found in any single discipline, college, physical location, or individual. Thus, our ability to move easily across such boundaries in order to collaborate with colleagues makes us better problem solvers and more likely of success in whatever ventures we undertake.

Learning Everywhere - We believe that teaching and learning should occur beyond traditional classrooms and laboratories—in any place ripe for inquiry and experimentation, including clinics, environmental and field-study sites, online forums, libraries, museums, theaters, and places of civic engagement, among many others.

Progressive Change - We are not afraid to take thoughtful risks in the pursuit of our shared goals.

Stewardship of Our Planet - We recognize that the health of individuals, communities, and the natural environment is essential to the survival of the planet and its inhabitants and to a well-functioning society.

UNE is at an enviable point in our evolution, a point from which we are poised to leap to ever greater heights.

At the center of our new strategic plan, ***Our World, Our Vision***, is a daring and expansive perspective on "health": **We will establish UNE among the premier providers of education, expertise, and innovation for sustaining the health of our world's people, communities, and natural environment.**

We are ready. Even a short list of our achievements demonstrates the force that UNE has become:

• We offer an exceptional return on our students' educational investment. More than 93 percent of UNE undergraduates start a job or enter a graduate program within six months of receiving their diploma. The Brookings Institute ranks us number one among all of Maine's colleges and universities for our ability to increase students' career earnings.

• We prepare students to be culturally fluent members of an increasingly global workforce. UNE undergraduates study abroad at five-times the national average, spending semesters at UNE's very own campus in Tangier, Morocco, as well as at affiliated campuses in Spain, France, and Iceland.

• We are Maine's leading provider of health professionals. Offering our state's only medical school and Northern New England's only dental school, as well as programs in pharmacy, nursing, and a range of other health professions, UNE plays a leading role in meeting the health care needs of underserved communities throughout the Northeast and beyond.

• We are a national leader in interprofessional health care education (IPE). Research clearly demonstrates improved health outcomes when patients are cared for by teams of health care professionals—doctors, nurses, physician assistants, physical therapists, and social workers working side by side. UNE prepares aspiring health professionals for such collaborations by having them learn and work beside other students representing the full range of health professions programs.

• We engage in important research and scholarship. The work of UNE researchers has improved breast cancer detection, led to better understanding of how the Zika virus spreads, demonstrated how dehumanizing speech leads to violence and discrimination, uncovered how psychiatric medications can cause diabetes and bone fractures in children, and even unlocked the secret life of sharks. Our success is demonstrated by 800 percent growth in external funding over the past decade. More importantly, UNE students benefit, too. Just under half of all our undergraduates work with faculty on research projects (compared to 23 percent nationwide).

• We graduate students who possess real world experience. Virtually all UNE students engage in some form of hands-on experiential learning, gaining invaluable disciplinary knowledge and interpersonal skills through internships, clinical rotations, service learning, and countless other opportunities to apply classroom knowledge in community organizations, businesses, government offices, and many other work settings.

• We are committed to fostering a robust marketplace of ideas. In an era when society has found itself increasingly divided along partisan ideological lines, we foster an environment in which the hard conversations essential to a true education still occur, challenging members of our community to reach beyond their intellectual comfort zones. Our Center for Global Humanities, George and Barbara Bush Lecture Series, P.D. Merrill Business Ethics Lecture, and President's Forum, among many other events, offer venues where a diversity of ideas can thrive through civil and respectful discourse.

We are ambitious and restless—an institution that is of the world. Look around, and you will find our students, faculty, and professional staff in places as diverse as Morocco and Iceland, and in clinics and field sites across our nation's cities, villages, forests, and oceans. You will see us learning from experiences in communities representing every form of human difference. These cultural, personal, and geographic connections reflect

the profound respect and concern that the UNE community holds for the health of our world— its people, its communities, and its physical environment. We couple this concern with our nimbleness, flexibility, creativity, and sense of urgency to make UNE a powerful source of innovation for a healthier planet.

We have a strong legacy and a prestigious set of programs in the health sciences. But we are a comprehensive university, and creating a healthier planet requires more than talented health professionals. It requires leaders from all disciplines, including the natural and social sciences, humanities and arts, business, policy and more—bringing their diverse and complementary skills to bear on the most pressing challenges of our world.

We are seizing on our foundational strengths to:

- Expand active and collaborative teaching and learning through pedagogical innovation and enhanced technologies;
- Enhance our commitment to experiential learning;
- Create even more opportunities for students, faculty, and professional staff to work together across academic disciplines and professional programs; and
- Adapt and scale up the solutions we find working on problems in local communities in order to address similar challenges around the globe.

These steps chart a bold new course for UNE:

We will be one of the nation's top providers of education, expertise, and innovation for sustaining the health of our world's natural environment, people, and communities.

This broad perspective on health requires us to focus on interactions among individuals, communities, and the environment. Moreover, it demands that we look for solutions to our world's pressing challenges by drawing knowledge and expertise from many academic disciplines. This means exposing students to discipline-based knowledge, cross disciplinary habits of mind, and professional competencies that are discussed in this strategic plan. With these skills, UNE students will be ready to bring the fullest breadth of understanding and expertise to bear on improving the condition of people, society, and our planet.

Inspired by this vision and guided by this plan, UNE will empower students to anticipate and meet the challenges of this new world and to become active leaders in creating its future.

UNE—for the health of our world.

(b) *A statement of any anticipated changes in the institution's mission over the next five (5) years.*

There are no anticipated changes to the University's mission over the next five years.

The University is a private, non-profit corporation with recognized tax exempt status under IRS Code Section 501(c)(3), and must abide by the rules of tax exempt status in order to maintain that standing. Accordingly, only those uses permitted by that code would be pursued.

(c) *The institution's objective with respect to growth and changes over the next five (5) years include:*

1. Provide additional student support facilities and services. This would help to further develop the sense of "Campus Community".

2. Integrating the medical college into an academic healthcare campus in Portland will then allow the for the full transformation of the Biddeford Campus as the undergraduate residential campus, allowing for the growth of marine programs, business and entrepreneurship, digital sciences, criminal justice, the arts and others. The spaces vacated by the relocation of the medical college will be transformed, retrofitted and repurposed to support UNE's undergraduate programs that will address critical workforce needs in the state and region.

3. The University of New England will be nationally recognized with programs of excellence and innovation in health professions and the arts and sciences. The University will have well developed centers of excellence in research, and will have integrated educational, research, and science programs that are based on collaborative, interdisciplinary partnerships.

4. Cocurricular programs are central to the mission of the University for educating students and supporting the personal growth of all members of the university community. Athletic programs will achieve demonstrable success enriching the University and aiding in the recruitment, retention and overall satisfaction of the student body.

5. Increase diversity in national and international populations.

6. UNE will have a strong program of service at all levels of our society and be a leader in environmental stewardship.

7. The planning and integration of our academic, residence life and support facilities will be viewed as a model for building interdisciplinary, team based learning and scholarly communities.

See sections 3 and 4 for detailed information on growth projections

2-**Existing Physical Conditions**

a. A scaled plan at a scale of not more than 1" = 200' showing the location of all existing buildings, structures, athletic fields and facilities, parking, walkways, service areas, and other impervious surfaces and the height of all buildings and structures referenced to the National Geodetic Vertical Datum (NGVD).

Drawings *MP-101, Existing Conditions Plan* and *MP-105, Existing Conditions Plan* reflect the information requested under this section. Existing building heights (NGVD) are noted on those plans, which are located at the rear of this section.

b. A scaled plan at the same scale as the existing conditions plan showing the location of all existing utilities, sewer and water systems, and storm water drainage facilities.

Drawing *MP-102, Existing Utility Plan*, located at the rear of this section, shows existing utility information on the campus.

c. A natural resources inventory and analysis showing the location of all significant natural resources within those areas of the campus that are already developed or where development activities including clearing or filling are proposed or that will be potentially impacted by proposed development activities. The analysis shall assess the significance of these resources and the issues they raise with respect to the Master Plan. This shall include a plan at the same scale as the existing conditions plan showing the locations of the significant resources.

For locations of potential areas to be developed, please refer to the *Campus Master Plan - Five Year Development Strategy* plan in the back of section 10. Several areas of forested wetlands are located on the undeveloped portions of the campus. None of these are remarkable, nor, other than portions of wetlands located within 25 feet of streams, are they deemed to be of special significance by Maine Department of Environmental Protection, MeDEP.

Based upon information obtained from previous projects on the campus, wetland mapping and delineation, and field observations by the University's wetland scientists, it was determined that there are no significant natural resources located in developed areas of the campus or that would be impacted by the prosed development. Please see the summary of this review that was prepared by Site Design Associates, which is included at the rear of this section.

There are two drainage courses meeting the Maine Department of Environmental Protection's (MeDEP) definition of streams located on the campus as shown on Drawing *MP-103, Topographic and Natural Resources Plan*.

There were 7 vernal pools identified, by Joe Noel, a wetland scientist, on the undeveloped portion of the campus, located between Route 9 and the Old Pool Road.

The approximate locations of these are shown on drawing *MP-103, Topographic and Natural Resources Plan*. These are labeled Vernal pools A-E, 1, and 2. There are three additional vernal pools, identified as F, H, and I located on the recently developed parcel, which is southerly of Newtown Road and westerly of Route 9.

All of the vernal pools southerly of Newtown Road and Westerly of Route 9 were deemed by the Army Corp of Engineers to have been "impacted", during the development of this parcel, and the required mitigation was completed. These "impacted" vernal pools are monitored annually by UNE environmental studies classes and vernal pool H continues to be a viable as vernal pool, with its level of viability consistent with the annual variability of comparative vernal pools on campus.

Activities in and/or adjacent to the vernal pools are regulated by the MeDEP under the Natural Resources Protection Act (NRPA) and by the Army Corps of Engineers (ACOE). While it appears that no significant impacts will arise from the proposed development, permits or amendments will be sought from each of these agencies, as required.

The Saco River and associated wetlands are located northerly of the campus. There are several potential projects within 500' of the Saco River. These include an addition to the existing Marine Science Research Center in support of the ongoing research activities, a new waterfront access research pier facility to allow research related activities to year round, converting the temporary recreational waterfront access facility to a permanent facility in support UNE's crew and sailing programs, recreational waterfront access from 1 Hills beach Road, ADA compliant trails along the waterfront, an addition to the wastewater treatment facility, an addition to Decary Hall, an addition to the Petts Center, and addition(s) to the Campus Center. Development of these projects will require compliance with the regulations of and approval from the Saco River Corridor Commission, as well as the other requisite permitting agencies.

Short Nosed Sturgeon and Atlantic Sturgeon, endangered and threatened species, have been located by University researchers in the Saco River adjacent to the campus, and were the subject of several research initiatives at the University of New England. State records indicate that the imperiled Hollow Joe-Pye Weed has been observed in the vicinity of, but not on University properties proposed for development. Spotted Turtles, a threatened species in State of Maine, have been observed on the University's undeveloped land parcel, north of the main campus. No rare or endangered species were observed in any areas of existing development nor in areas proposed for development under this Master Plan Submission.

The University will comply with all applicable permitting provisions at the time of any new development, including any applicable City of Biddeford, MeDEP Site Location of Development Act (SLODA), MeDEP Natural Resources Protection Act (NRPA), and the U.S. Army Corps of Engineers (ACOE) regulations.

If there are specific questions or concerns related to a particular wetland or wildlife impact connected with any proposed development in this area, those detailed questions must and will be addressed during the site plan review process.

d. An historic and archeological resources inventory and analysis showing the location of any known historic or archeological resources and any area with potential as an area of historic or archeological significance within those areas of the campus that are already developed or where development activities including clearing or filling are proposed or that will be potentially impacted by proposed development activities. This shall include a plan at the same scale as the existing conditions plan.

The University of New England has conducted several historical and archeological surveys on the Biddeford campus in conjunction with prior development activities. Drawing *MP-104, Archaeological Survey Plan*, located at the rear of this section, depicts the locations of phase III archaeological surveys undertaken during the site selection process for the Marine Science and Research Center in 2000. The studies, conducted by Archaeological Research Consultants, Inc. studied the undeveloped area overlooking the Saco River between the river and Hills Beach Road. The investigations revealed a number of positive test pits within the band of undeveloped land along the river. During the construction of the Marine Science and Research Center, a number of sites were monitored during excavation and artifacts were recovered. The potential work proposed in and around the Marine Science Center may require additional inspections and monitoring.

The rest of the potential 5-year development northerly of Hills Beach Road will occur in areas that have already been significantly disturbed, as a consequence of previous construction and earthmoving activities. Therefore, the development as proposed on the *Campus Master Plan - Five Year Development Strategy* plan in the back of section 10, is unlikely to impact areas of historical or archeological significance.

In 1993, Emerson W. Baker undertook a study of the Alfond Center for Health Sciences site. His investigation determined most of the area had undergone significant disturbance in the past. No prehistoric artifacts were recovered during this investigation, although Baker did note that original ground surface is present close to Stella Maris.

In reviewing the 2003 Master Plan the Maine Historic Preservation Commission had suggested that a Phase I Archaeological Survey of the area within 200 feet of Stella Maris Hall should also be undertaken prior to ground disturbance in that area. In August 2003, Emerson Baker, a Maine certified Level 2 Historical Archaeologist, conducted a Phase 1 survey of this area and found no significant remains in the test excavations. He concluded that “there would appear to be virtually no undisturbed land left within 200 feet of Stella Maris” and that “no further testing within 200 feet of Stella Maris is needed’.

Also, in review of the 2003 Master Plan the Maine Historic Preservation Commission has suggested that a prehistoric archeologist should be present during the ground disturbing activities associated with the construction of Featherman Hall, to monitor these activities.

The Commission reviewed the monitoring report prepared by Rebecca Cole-Will of TRC which concluded "Archaeologist monitored ground disturbing activities on the ball field at the University of New England during a project to construct a new residence hall. Much of the area, if not all of the previous ball field, had been extensively disturbed in the past by installation of utility infrastructure. No cultural materials or features were identified."

Understanding the archeological significance of the area, a UNE Archeology course is taught each summer, to further our knowledge of the past and to provide students field experience in archeology.

Much of the proposed development will be located southerly of Hills Beach and Old Pool Roads, and southerly of the Newtown Road and westerly of Route 9. These areas consist of ledge outcroppings with substantial slopes in some areas. These areas are located a considerable distance from the Saco River. In conjunction with previous projects (Facilities Management Building, Marcil Hall, and previous master plans), the University's consultants and the Maine Historic Preservation Commission have found that there are no significant resources (historic, architectural, or archaeological) affected in these areas.

None of these aforementioned studies or results should preclude construction of facilities as envisioned in the Master Plan.

Several cemeteries are also located on or near the campus; these are shown on Drawing *MP-101, Existing Conditions Plan*. The creation of the waterfront access storage facility is near an unmarked gravesite location. However, the existing structure, which is to be expanded, is located in an existing parking lot, so should not impact the unmarked gravesite location. No other development is proposed proximal to these areas.

e. Data on the existing lot coverage and lot coverage ratio

Lot coverage information is shown on the *Restrictions on Developable Areas* Plan, which can be found at the back of this section.

Site Design Associates
Consulting Engineering and Land Planning

December 19, 2022

Mr. Alan Thibeault
University of New England
11 Hills Beach Road
Biddeford, Maine 04005

RE: 2022 Master Plan

Dear Alan:

We are writing to comment on Section 2.c., of the Master Plan, which requires a natural resources inventory and analysis and an assessment of issues raised with respect to the master plan. Drawings MP-103 and MP-105 show the wetlands and vernal pools currently located on the existing campus. We have reviewed the Campus Master Plan - Five Year Development Strategy plan, and the narrative you have prepared in fulfillment of the requirements for this section.

We note that the majority of proposed development will be located in areas previously screened by the Maine DEP as part of the Site Location of Development Act permit process. The screening included historical, wetland, vernal pools, and wildlife habitat impacts in areas proposed for development, and in other areas of the campus with the potential for development.

As noted on Drawing C-103, there are 7 vernal pool areas located on the undeveloped portion of the campus between Old Pool Road and Route 9. Since the last initial mapping, vernal pools C and D have merged into one complex. Based upon our monitoring, vernal pool system C/D and vernal pool 1 both continue to meet the criteria for being designated as a significant vernal pool under the Natural Resources Protection Act. Development within 250 ft of these areas is regulated by the Maine DEP. A very small portion of F3, Tennis Courts, may be located in the outer limit of the 250 ft regulatory area, similarly to the existing tennis courts. This will be reviewed with the regulators during the permitting process.

The majority of the development shown on the master plan westerly of Route 9 and southerly of Newtown Road, would occur in areas where natural resource impacts were reviewed and approved by the Maine DEP and Army Corps of Engineers in 2009, and no additional significant impact is anticipated as a result of the master plan.

Several of the proposals involve waterfront development, including S4, the Waterfront Access for Research. This area was investigated extensively when planning was undertaken for the Marine Science Center. The waterfront development will require permits from the Maine DEP in order to proceed with construction. No significant impacts to natural resources are anticipated as a result of the waterfront development programs.

23 Whitney Way Topsham, Maine 04086
Phone: (207) 449-4275 email: info@sitedesignassociates.biz

Based on the development plan, the remaining development would occur in the central portions of the campus, and would primarily consist of building additions and infill development. There are no significant natural resources that will be impacted by the development proposed between Hills Beach Road and the waterfront, nor by the development proposed between Hills Beach Road and Route 9.

Please let me know if you require additional information relative to this topic.

Sincerely,
Site Design Associates

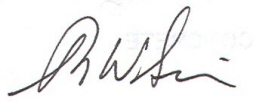

Tom Saucier, P.E.
President

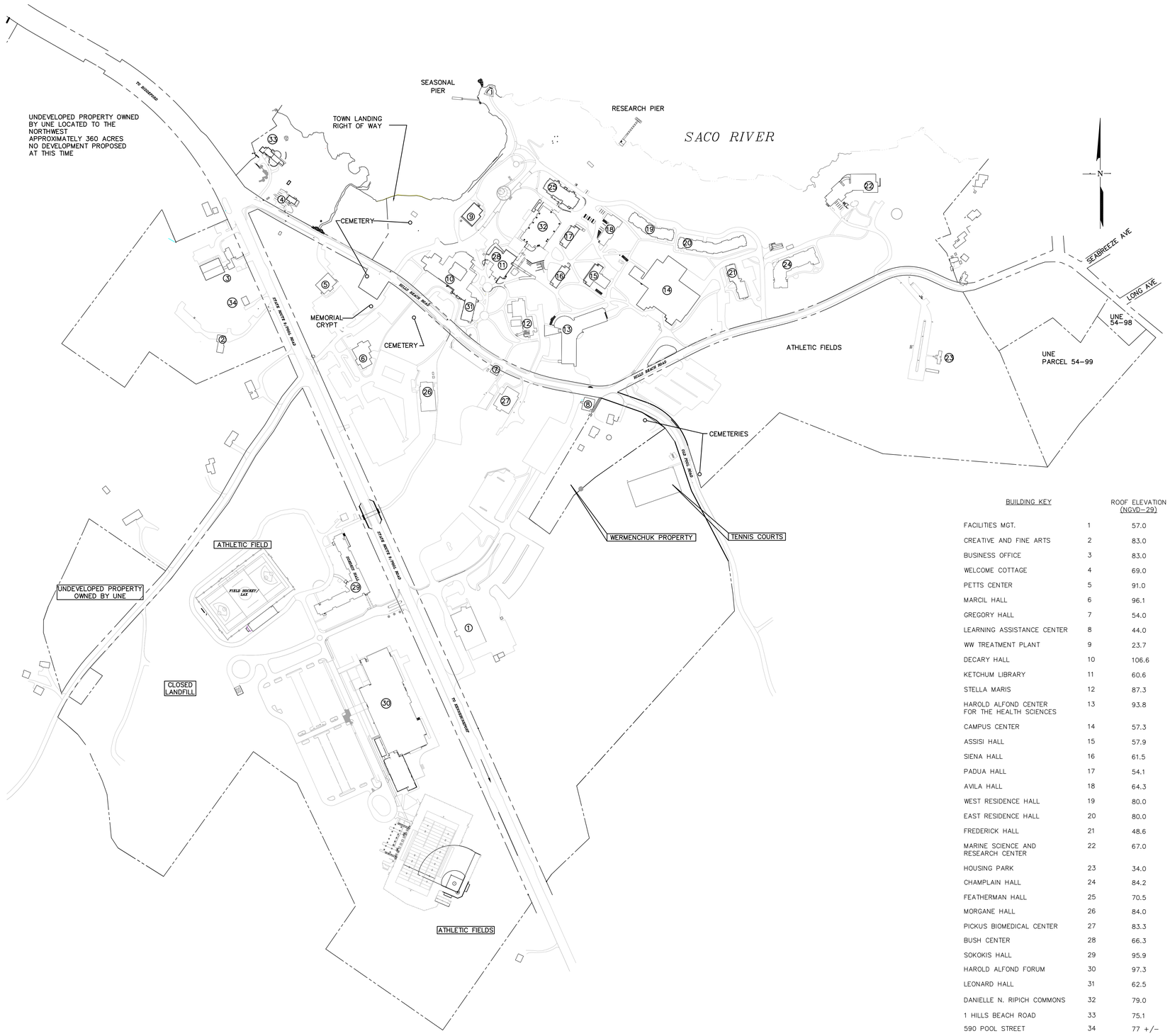

BUILDING KEY		ROOF ELEVATION (NGVD-29)	BUILDING HEIGHT (PER ORDINANCE DEFINITION)
FACILITIES MGT.	1	57.0	18.0
CREATIVE AND FINE ARTS	2	83.0	22.0
BUSINESS OFFICE	3	83.0	18.3
WELCOME COTTAGE	4	69.0	16.0
PETTS CENTER	5	91.0	27.5
MARCIL HALL	6	96.1	40.0
GREGORY HALL	7	54.0	16.0
LEARNING ASSISTANCE CENTER	8	44.0	14.0
WW TREATMENT PLANT	9	23.7	9.6
DECARY HALL	10	106.6	69.4
KETCHUM LIBRARY	11	60.6	30.4
STELLA MARIS	12	87.3	36.9
HAROLD ALFOND CENTER FOR THE HEALTH SCIENCES	13	93.8	55.3
CAMPUS CENTER	14	57.3	34.4
ASSISI HALL	15	57.9	31.2
SIENA HALL	16	61.5	30.8
PADUA HALL	17	54.1	30.4
AVILA HALL	18	64.3	40.1
WEST RESIDENCE HALL	19	80.0	47.0
EAST RESIDENCE HALL	20	80.0	47.0
FREDERICK HALL	21	48.6	23.2
MARINE SCIENCE AND RESEARCH CENTER	22	67.0	33.0
HOUSING PARK	23	34.0	13.5
CHAMPLAIN HALL	24	84.2	48.5
FEATHERMAN HALL	25	70.5	50.0
MORGANE HALL	26	84.0	35.0
PICKUS BIOMEDICAL CENTER	27	83.3	44.3
BUSH CENTER	28	66.3	40.0
SOKOKIS HALL	29	95.9	45.1
HAROLD ALFOND FORUM	30	97.3	46.4
LEONARD HALL	31	62.5	23.2
DANIELLE N. RIPICH COMMONS	32	79.0	49.83
1 HILLS BEACH ROAD	33	75.1	17.5
590 POOL STREET	34	77 +/-	14 +/-

GRAPHIC SCALE

200' 0 100' 200' 400' 800'

(IN FEET)
1 inch = 200 ft.

THIS PLAN SHALL NOT BE MODIFIED WITHOUT WRITTEN PERMISSION FROM SITE DESIGN ASSOCIATES, ANY ALTERATIONS, OTHERWISE, SHALL BE AT THE USER'S SOLE RISK AND WITHOUT LIABILITY TO SITE DESIGN ASSOCIATES.

REV.	DATE	STATUS	BY	CHKD.	APPD.
B	2/08/23	FOR SUBMISSION	DEPT	DEPT	TWS
A	1/20/23	FOR CITY OF BIDDEFORD REVIEW	DEPT	DEPT	TWS

Site Design Associates
Consulting Engineering & Land Planning
23 Whitney Way Topsham, Maine 04086 Tel: (207) 449-4275

CLIENT:
UNIVERSITY OF NEW ENGLAND
11 HILLS BEACH ROAD
BIDDEFORD, MAINE 04005

DESIGN: DEPT.
DRAWN: DEPT.
CHKD: TWS
DATE: JANUARY 2023
SCALE: 1" = 200 FT±

PROJECT: UNE CAMPUS MASTER PLAN
11 HILLS BEACH ROAD BIDDEFORD, MAINE 04005

EXISTING CONDITIONS PLAN

PROJ. NO. –
REV. B
DWG. NO. MP-101

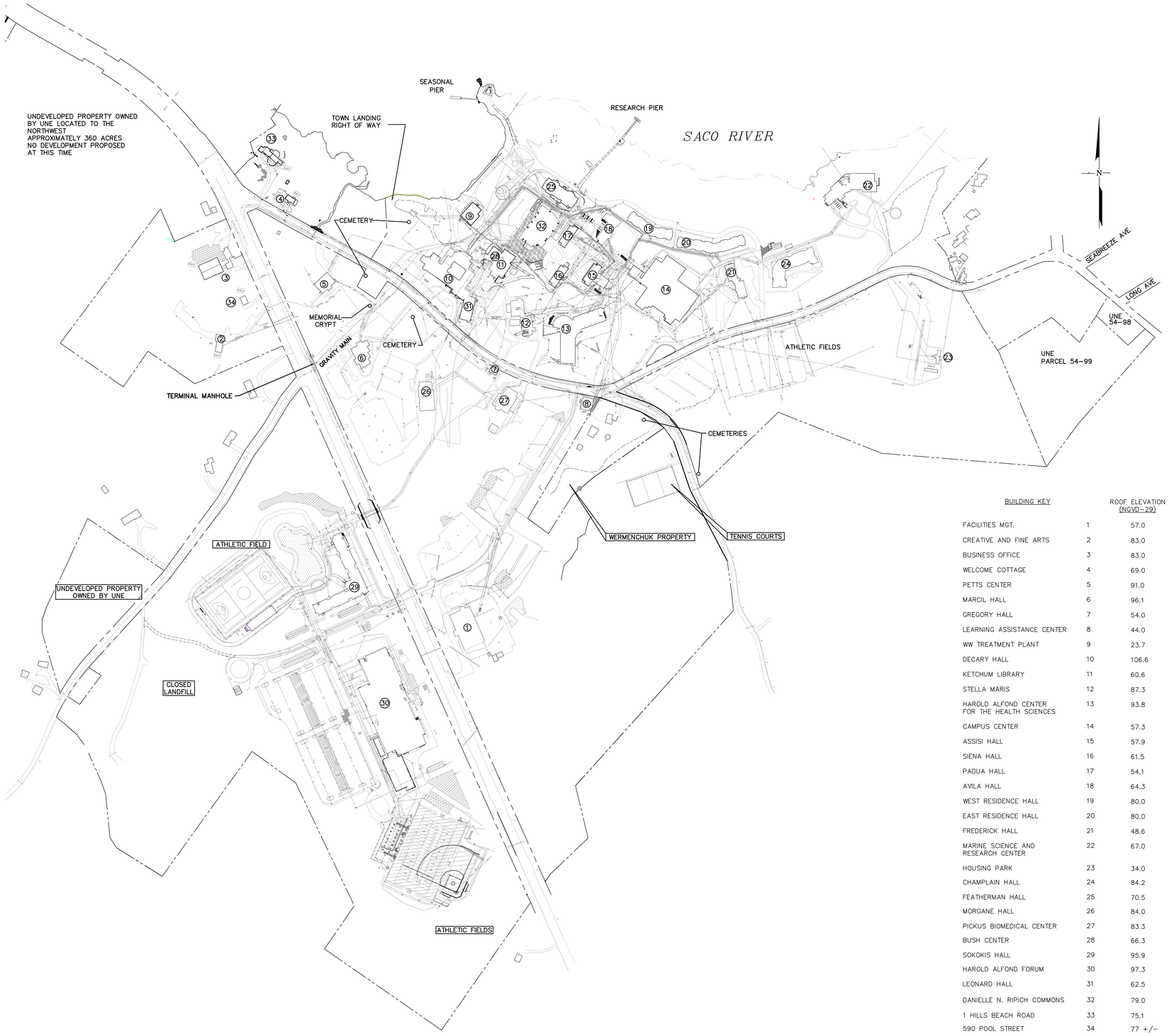

BUILDING KEY		ROOF ELEVATION (NGVD-29)	BUILDING HEIGHT (PER ORDINANCE DEFINITION)
FACILITIES MGT.	1	57.0	18.0
CREATIVE AND FINE ARTS	2	83.0	22.0
BUSINESS OFFICE	3	83.0	18.3
WELCOME COTTAGE	4	69.0	16.0
PETTS CENTER	5	91.0	27.5
MARCIL HALL	6	96.1	40.0
GREGORY HALL	7	54.0	16.0
LEARNING ASSISTANCE CENTER	8	44.0	14.0
WW TREATMENT PLANT	9	23.7	9.6
DECARY HALL	10	106.6	69.4
KETCHUM LIBRARY	11	60.6	30.4
STELLA MARIS	12	87.3	36.9
HAROLD ALFOND CENTER FOR THE HEALTH SCIENCES	13	93.8	55.3
CAMPUS CENTER	14	57.3	34.4
ASSISI HALL	15	57.9	31.2
SIENA HALL	16	61.5	30.8
PADUA HALL	17	54.1	30.4
AVILA HALL	18	64.3	40.1
WEST RESIDENCE HALL	19	80.0	47.0
EAST RESIDENCE HALL	20	80.0	47.0
FREDERICK HALL	21	48.6	23.2
MARINE SCIENCE AND RESEARCH CENTER	22	67.0	33.0
HOUSING PARK	23	34.0	13.5
CHAMPLAIN HALL	24	84.2	48.5
FEATHERMAN HALL	25	70.5	50.0
MORGANE HALL	26	84.0	35.0
PICKUS BIOMEDICAL CENTER	27	83.3	44.3
BUSH CENTER	28	66.3	40.0
SOKOKIS HALL	29	95.9	45.1
HAROLD ALFOND FORUM	30	97.3	46.4
LEONARD HALL	31	62.5	23.2
DANIELLE N. RIPICH COMMONS	32	79.0	49.83
1 HILLS BEACH ROAD	33	75.1	17.5
590 POOL STREET	34	77 +/-	14 +/-

GRAPHIC SCALE

200' 0 100' 200' 400' 800'

(IN FEET)
1 inch = 200 ft.

THIS PLAN SHALL NOT BE MODIFIED WITHOUT WRITTEN PERMISSION FROM SITE DESIGN ASSOCIATES, ANY ALTERATIONS, OTHERWISE, SHALL BE AT THE USER'S SOLE RISK AND WITHOUT LIABILITY TO SITE DESIGN ASSOCIATES.

REV.	DATE	STATUS	BY	CHKD.	APPD.
B	2/08/23	FOR SUBMISSION	DEPT	DEPT	TWS
A	1/20/23	FOR CITY OF BIDDEFORD REVIEW	DEPT	DEPT	TWS

Site Design Associates
Consulting Engineering & Land Planning
23 Whitney Way Topsham, Maine 04086 Tel: (207) 449-4275

CLIENT:
UNIVERSITY OF NEW ENGLAND
11 HILLS BEACH ROAD
BIDDEFORD, MAINE 04005

DESIGN: DEPT.
DRAWN: DEPT.
CHKD: TWS
DATE: JANUARY 2023
SCALE: 1" = 200 FT±

PROJECT: UNE CAMPUS MASTER PLAN
11 HILLS BEACH ROAD BIDDEFORD, MAINE 04005

EXISTING UTILITY PLAN

PROJ. NO. –
REV. A
DWG. NO. MP-102

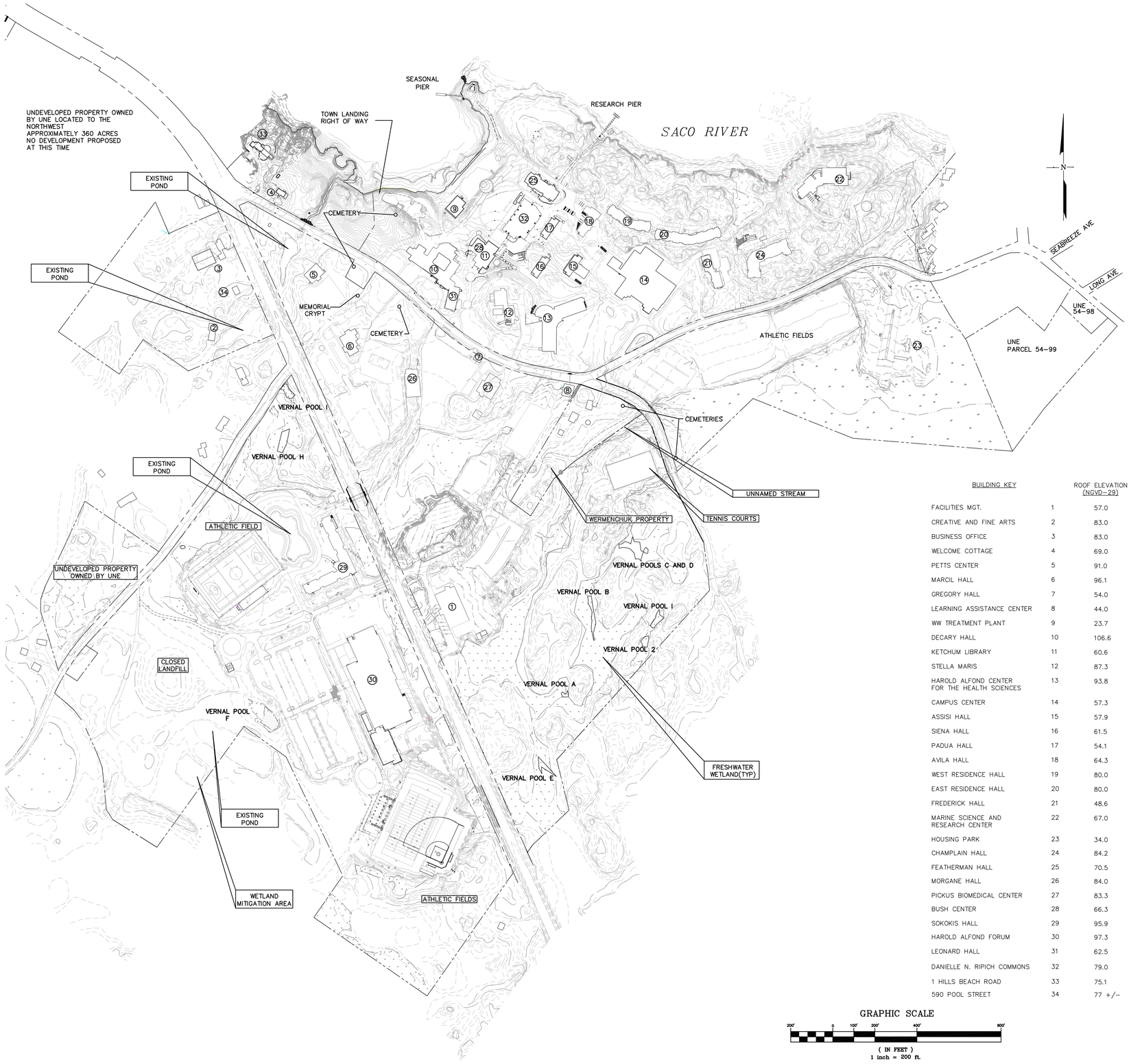

BUILDING KEY		ROOF ELEVATION (NGVD-29)	BUILDING HEIGHT (PER ORDINANCE DEFINITION)
FACILITIES MGT.	1	57.0	18.0
CREATIVE AND FINE ARTS	2	83.0	22.0
BUSINESS OFFICE	3	83.0	18.3
WELCOME COTTAGE	4	69.0	16.0
PETTS CENTER	5	91.0	27.5
MARCIL HALL	6	96.1	40.0
GREGORY HALL	7	54.0	16.0
LEARNING ASSISTANCE CENTER	8	44.0	14.0
WW TREATMENT PLANT	9	23.7	9.6
DECARY HALL	10	106.6	69.4
KETCHUM LIBRARY	11	60.6	30.4
STELLA MARIS	12	87.3	36.9
HAROLD ALFOND CENTER FOR THE HEALTH SCIENCES	13	93.8	55.3
CAMPUS CENTER	14	57.3	34.4
ASSISI HALL	15	57.9	31.2
SIENA HALL	16	61.5	30.8
PADUA HALL	17	54.1	30.4
AVILA HALL	18	64.3	40.1
WEST RESIDENCE HALL	19	80.0	47.0
EAST RESIDENCE HALL	20	80.0	47.0
FREDERICK HALL	21	48.6	23.2
MARINE SCIENCE AND RESEARCH CENTER	22	67.0	33.0
HOUSING PARK	23	34.0	13.5
CHAMPLAIN HALL	24	84.2	48.5
FEATHERMAN HALL	25	70.5	50.0
MORGANE HALL	26	84.0	35.0
PICKUS BIOMEDICAL CENTER	27	83.3	44.3
BUSH CENTER	28	66.3	40.0
SOKOKIS HALL	29	95.9	45.1
HAROLD ALFOND FORUM	30	97.3	46.4
LEONARD HALL	31	62.5	23.2
DANIELLE N. RIPICH COMMONS	32	79.0	49.83
1 HILLS BEACH ROAD	33	75.1	17.5
590 POOL STREET	34	77 +/-	14 +/-

GRAPHIC SCALE

200' 0 100' 200' 400' 800'

(IN FEET)
1 inch = 200 ft.

THIS PLAN SHALL NOT BE MODIFIED WITHOUT WRITTEN PERMISSION FROM SITE DESIGN ASSOCIATES, ANY ALTERATIONS, OTHERWISE, SHALL BE AT THE USER'S SOLE RISK AND WITHOUT LIABILITY TO SITE DESIGN ASSOCIATES.

REV.	DATE	STATUS	BY	CHKD.	APPD.
B	2/08/23	FOR SUBMISSION	DEPT	DEPT	TWS
A	1/20/23	FOR CITY OF BIDDEFORD REVIEW	DEPT	DEPT	TWS

Site Design Associates
Consulting Engineering & Land Planning
23 Whitney Way Topsham, Maine 04086 Tel: (207) 449-4275

CLIENT:
UNIVERSITY OF NEW ENGLAND
11 HILLS BEACH ROAD
BIDDEFORD, MAINE 04005

DESIGN: DEPT.
DRAWN: DEPT.
CHKD: TWS
DATE: JANUARY 2023
SCALE: 1" = 200 FT±

PROJECT:
UNE CAMPUS MASTER PLAN
11 HILLS BEACH ROAD BIDDEFORD, MAINE 04005

TOPOGRAPHIC AND NATURAL RESOURCES PLAN

PROJ. NO. –
REV. B
DWG. NO. MP-103

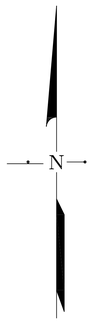

BUILDING KEY		ROOF ELEVATION (NGVD–29)	BUILDING HEIGHT (PER ORDINANCE DEFINITION)
FACILITIES MGT.	1	57.0	18.0
CREATIVE AND FINE ARTS	2	83.0	22.0
BUSINESS OFFICE	3	83.0	18.3
WELCOME COTTAGE	4	69.0	16.0
PETTS CENTER	5	91.0	27.5
MARCIL HALL 226500 N	6	96.1	40.0
GREGORY HALL	7	54.0	16.0
LEARNING ASSISTANCE CENTER	8	44.0	14.0
WW TREATMENT PLANT	9	23.7	9.6
DECARY HALL	10	106.6	69.4
KETCHUM LIBRARY	11	60.6	30.4
STELLA MARIS	12	87.3	36.9
HAROLD ALFOND CENTER FOR THE HEALTH SCIENCES	13	93.8	55.3
CAMPUS CENTER	14	57.3	34.4
ASSISI HALL	15	57.9	31.2
SIENA HALL	16	61.5	30.8
PADUA HALL	17	54.1	30.4
AVILA HALL	18	64.3	40.1
WEST RESIDENCE HALL	19	80.0	47.0
EAST RESIDENCE HALL 226500 N	20	80.0	47.0
FREDERICK HALL	21	48.6	23.2
MARINE SCIENCE AND RESEARCH CENTER	22	67.0	33.0
HOUSING PARK	23	34.0	13.5
CHAMPLAIN HALL	24	84.2	48.5
FEATHERMAN HALL	25	70.5	50.0
MORGANE HALL	26	84.0	35.0
PICKUS BIOMEDICAL CENTER	27	83.3	44.3
BUSH CENTER	28	66.3	40.0
SOKOKIS HALL	29	95.9	45.1
HAROLD ALFOND FORUM	30	97.3	46.4
LEONARD HALL	31	62.5	23.2
DANIELLE N. RIPICH COMMONS	32	79.0	49.83
1 HILLS BEACH ROAD	33	75.1	17.5
590 POOL STREET	34	77 +/–	14 +/–

ARCHAEOLOGICAL SURVEY BY ARC, INC. OF ELLSWORTH, MAINE.

- POSITIVE TEST PIT (TYP)
- NEGATIVE TEST PIT (TYP)
- TEST PIT IDENTIFICATION (TYP)
- APPROXIMATE TREE LOCATION

UNE CONTRACTED WITH A PRE HISTORIC ARCHAEOLOGIST TO MONITOR EARTHWORK DURING CONSTRUCTION OF FEATHERMAN HALL IN 2006. THE RESULTS WERE NEGATIVE

SACO RIVER

EXISTING FOUNDATION AND DUG WELL

A PHASE 1 ARCHAEOLOGICAL SURVEY WAS PERFORMED IN 2003 WITHIN A 200' RADIUS OF STELLA MARIS HALL. THE RESULTS WERE NEGATIVE

GRAPHIC SCALE

100' 0 50' 100' 200' 400'

(IN FEET)
1 inch = 100 ft.

THIS PLAN SHALL NOT BE MODIFIED WITHOUT WRITTEN PERMISSION FROM SITE DESIGN ASSOCIATES, ANY ALTERATIONS, OTHERWISE, SHALL BE AT THE USER'S SOLE RISK AND WITHOUT LIABILITY TO SITE DESIGN ASSOCIATES.

REV.	DATE	STATUS	BY	CHKD.	APPD.
B	2/08/23	FOR SUBMISSION	DEPT	DEPT	TWS
A	1/20/23	FOR CITY OF BIDDEFORD REVIEW	DEPT	DEPT	TWS

Site Design Associates
Consulting Engineering & Land Planning
23 Whitney Way Topsham, Maine 04086 Tel: (207) 449-4275

CLIENT:
UNIVERSITY OF NEW ENGLAND
11 HILLS BEACH ROAD
BIDDEFORD, MAINE 04005

DESIGN: DEPT.
DRAWN: DEPT.
CHKD: TWS
DATE: JANUARY 2023
SCALE: 1" = 100 FT±

PROJECT: UNE CAMPUS MASTER PLAN
11 HILLS BEACH ROAD BIDDEFORD, MAINE 04005

ARCHAEOLOGICAL SURVEY

PROJ. NO. –
REV. B
DWG. NO. MP–104

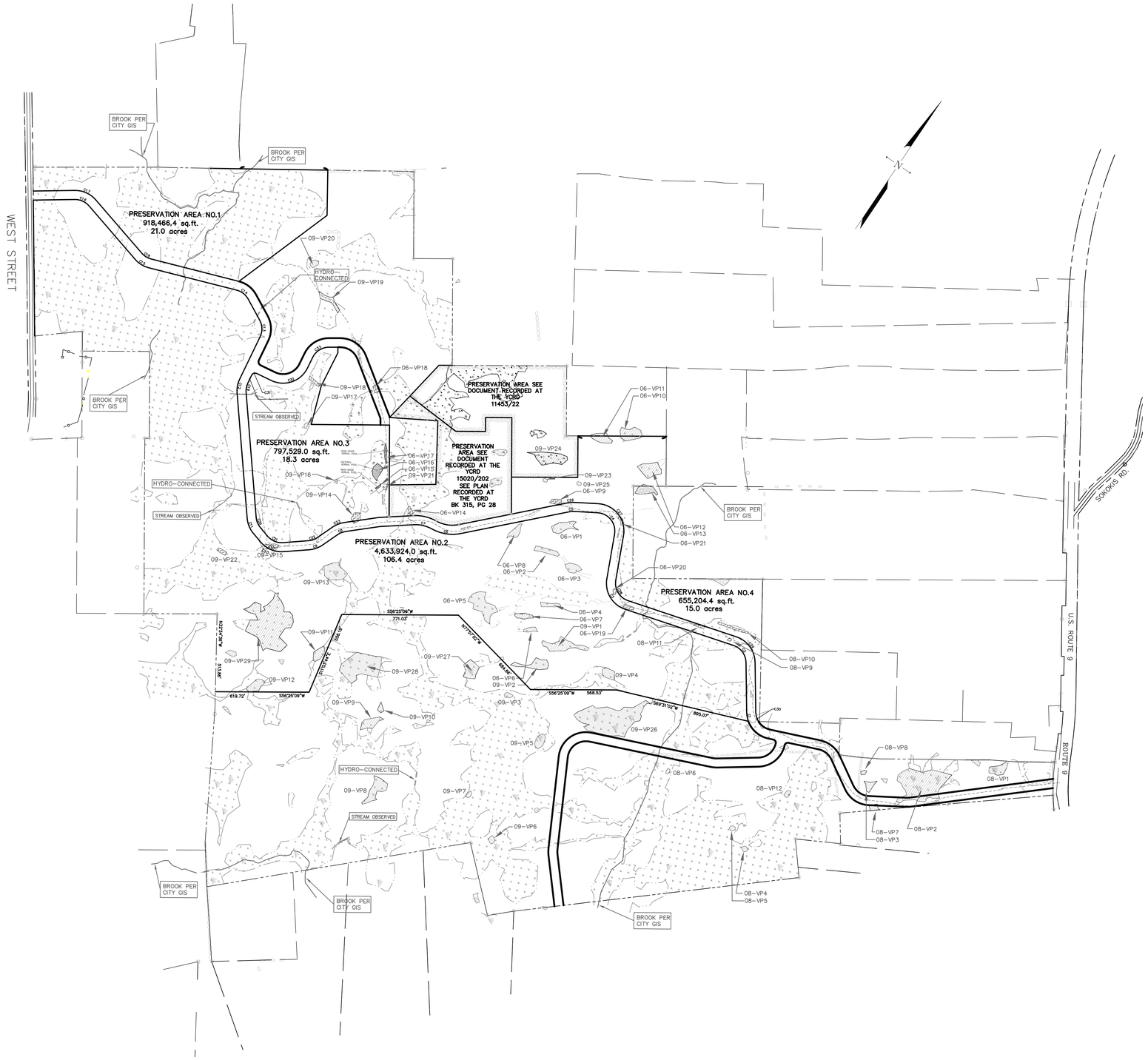

NO DEVELOPMENT IS PROPOSED FOR THIS PARCEL UNDER THE MASTER PLAN. IT WILL CONTINUE TO BE USED FOR RESEARCH AND EDUCATIONAL PURPOSES.

GRAPHIC SCALE

300 0 150 300 600 1200

(IN FEET)
1 inch = 300 ft.

THIS PLAN SHALL NOT BE MODIFIED WITHOUT WRITTEN PERMISSION FROM SITE DESIGN ASSOCIATES, ANY ALTERATIONS, OTHERWISE, SHALL BE AT THE USER'S SOLE RISK AND WITHOUT LIABILITY TO SITE DESIGN ASSOCIATES.

REV.	DATE	STATUS	BY	CHKD.	APPD.
B	2/08/23	FOR SUBMISSION	DEPT	DEPT	TWS
A	1/20/23	FOR CITY OF BIDDEFORD REVIEW	DEPT	DEPT	TWS

Site Design Associates
Consulting Engineering & Land Planning
23 Whitney Way Topsham, Maine 04086 Tel: (207) 449-4275

CLIENT:
UNIVERSITY OF NEW ENGLAND
11 HILLS BEACH ROAD
BIDDEFORD, MAINE 04005

DESIGN: DEPT.
DRAWN: DEPT.
CHKD: TWS
DATE: JANUARY 2023
SCALE: 1" = 300 FT±

PROJECT:
UNE CAMPUS MASTER PLAN
11 HILLS BEACH ROAD BIDDEFORD, MAINE 04005

EXISTING CONDITIONS AND NATURAL RESOURCES PLAN – 360 ACRE PARCEL

PROJ. NO. –
REV. B
DWG. NO. MP–105

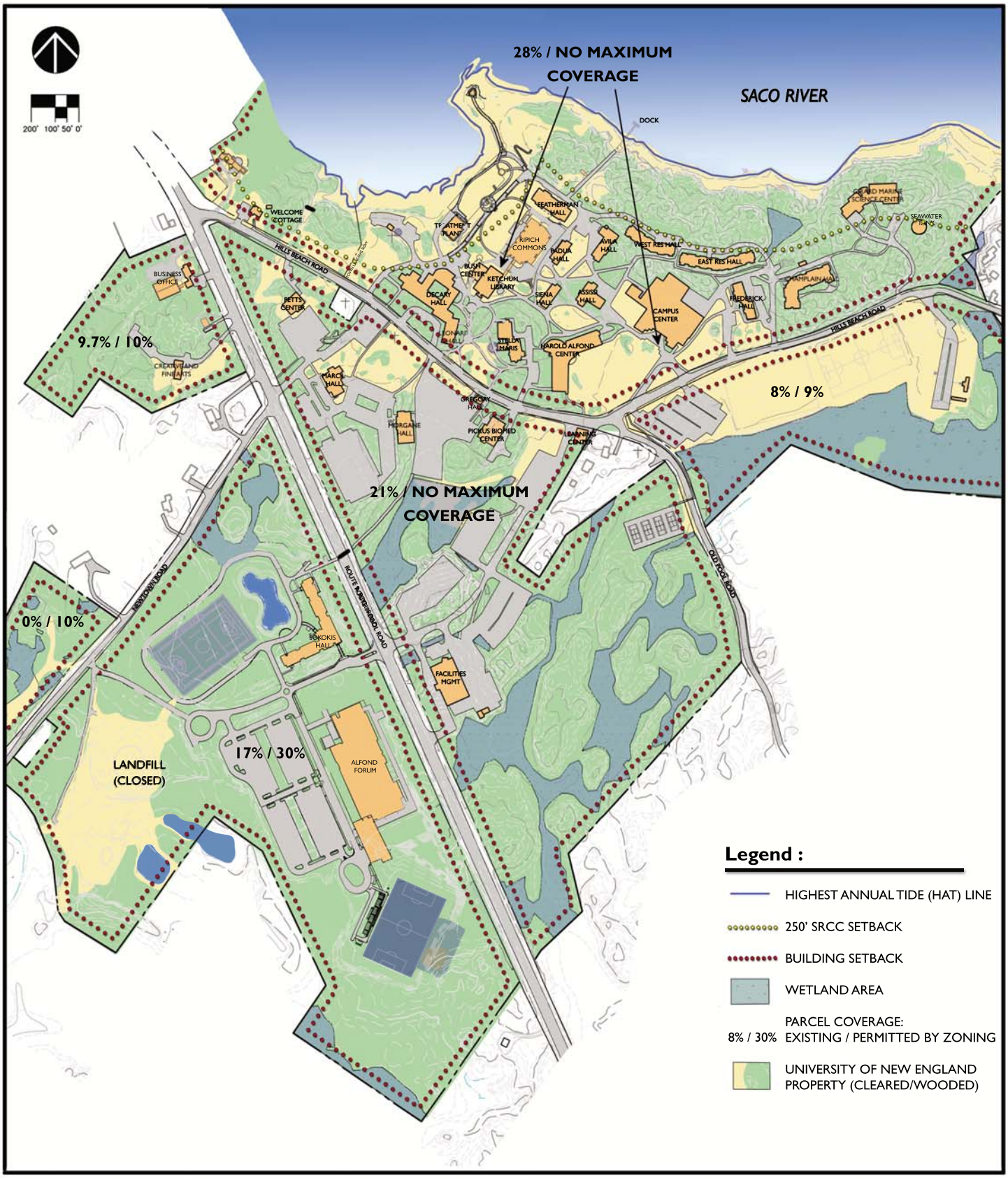

November 10, 2022

UNE

University of New England - Biddeford Campus

Campus Master Plan

Restrictions on Developable Areas

Site Design Associates
Civil Engineering and Land Planning

3-Programs and Activities

a.1 Current Educational Programs and Degree Offerings –

Undergraduate Programs

Majors

Animal Behavior
Applied Exercise Science
Applied Mathematics
Applied Social and Cultural Studies
Aquaculture and Aquarium Sciences
Art & Design Media
Art Education K-12
Athletic Training 3+2 Program
Biochemistry
Biological Sciences
Business Administration
Chemistry
Communications
Criminology
Data Science
Dental Hygiene (4-Year B.S.)
Educational Studies
Elementary Education
English
Environmental Science
Environmental Studies
Global Studies
Health, Wellness and Occupational Studies
History
Interdisciplinary Studies in the Humanities
Laboratory Science
Marine Affairs
Marine Entrepreneurship
Marine Sciences (Marine Biology Track)
Marine Sciences (Oceanography Track)
Marine Sciences (Medical Sciences)
Medical Biology (Pre-Physician Assistant Track – MPA)
Neuroscience
Nursing (4 Year B.S.N. Program)
Nursing (Accelerated B.S.N. – 16 Months)
Nutrition
Political Science
Pre-Pharmacy
Psychology
Public Health
Secondary Education
Social Work
Sociology

Special Education
Sport and Recreation Management
Sustainability and Business
Undeclared: GUST (Guided Undergraduate Studies)

Minors
Animal Behavior
Anthropology
Applied Mathematics
Aquaculture and Aquarium Sciences
Art
Art Therapy
Biochemistry
Biological Sciences
Biophysics
Business Administration
Chemistry
Climate Change Studies
Coaching
Communications
Computer Science
Economics
Education
English
Environmental Studies
Geographic Information Systems
Health, Law & Policy
Health, Medicine and Society
History
Latin American Studies
Marine Affairs
Marine Science
Medical Biology
Mental Health Rehabilitation
Neuroscience
Nutrition
Philosophy
Political Science
Psychology
Public Health
Social Innovation and Entrepreneurship
Social Work
Sociology
Special Education
Sport and Recreation Management
Women's and Gender Studies
Writing

Graduate Programs
Athletic Training (M.S.)
Biological Sciences (M.S.)
Marine Sciences (M.S.)
Professional Science Master's (PSM) in Ocean Food Systems
Osteopathic Medicine (D.O.)

a.2 Other regularly scheduled programs or activities offered or hosted by the institution:

Conferences and Events

Office of University Events & Conference Services

The Office of University Events & Conference Services hosts a wide range of seminars, workshops, training programs, meetings, summer camps, alumni events and many other special programs and events on both the Biddeford and Portland Campuses. These events are scheduled throughout the academic year and summer term. The following is an illustrative, but by no means complete list of University client organizations who regularly seek the assistance of University staff and facilities and are expected to contract with the University in the future for more programs.

Health
American Diabetes Association
Autism Society of Maine
Multiple nursing associations across Maine
Epilepsy New England
Multiple Sclerosis Great Maine Getaway
Narrative Informed Research on Aging

University Events/Education
Educate Maine
UArtic Events
Homecoming and Alumni Events
Deborah Morton Society
Sexual Assault Forensic Nursing Training
UNE Healthcare Exploration Camps
Social Security and Retirement Seminars

Government and Service
Biddeford City Council
Center for Excellence in Public Health events
Biddeford Cultural Heritage Center
Hills Beach Association Events
Junior League
Rotary Club

Sports
Team Envision
Zero Gravity
Seacoast United
Maine Mussels
Biddeford Youth Lacrosse
Maine Lacrosse Coaches Alliance
Southern Maine Middle School Hockey
New England Offensive Line Clinic
BobCat Big Man's Camp
Biddeford HS Hockey Boosters
Casco Bay Youth Hockey
New England Beach Bash Hockey
Adult Hockey leagues
207 Volleyball
HS Hockey
Maine Lightning Soccer
Biddeford Youth Hockey

Camps/Social Events
Semester at Sea Reunion
Biddeford class reunion
Memorial Reception
BYU Youth Summer Camp
Camp Pals

Corporate
Volk Packaging
ATX Advisory
Colby Engineering
SMRT Strategic Planning
Navadise Media

a.3 Current and Projected Enrollment of Full-Time and Part-Time students by head count based upon the most recent IPEDS Report

The base line year used for this report was the 2022-2023 academic year, which runs September through August. The 5-year projections are for the 2023-2024 through the 2027-2028 academic years.

The following clarifications are important to understand when reviewing the information related to enrollment baseline data. The most recent IPEDS (Integrated Post-Secondary Education Data Survey) was used as the source for this information. It was then adjusted as follows:

- The official IPEDS submitted by the University to the United States Department of Education includes both campuses. This information can be found at the following website: https://nces.ed.gov/ipeds/datacenter/institutionprofile.aspx?unitId=acb1acafb0b2

- For the purposes of this document, all data was adjusted to include the Biddeford campus only, unless specifically indicated otherwise.

- Enrollment data is by head count (i.e., all full time and part time students.)

- The enrollment data excludes duplicated headcounts. Thus, it excludes summer students already included in the fall semester.

- Enrollment data is adjusted for on-campus students only. It does not include off-campus enrollment – (i.e., 3rd and 4th year medical students, Masters in Education, Teacher Certification, Continuing Education, certificate programs, etc.) Off-campus is defined as spending less than 10 hours per week on campus, or less than one trip per week to campus.

Enrollment Projections - Biddeford campus only for Fall of:						
	2022	**2023**	**2024**	**2025**	**2027**	**2027**
Residential	1505	1410	1420	1440	1475	1515
Commuter	897	1095	745	750	760	775
Total	**2402**	**2505**	**2165**	**2190**	**2235**	**2290**

a.4 Current Employment by Type of Positions and Full-Time/Part-Time Status based upon the most recent IPEDS Report

The base line year used for this report was the 2022-2023 academic year, which runs September through August. The 5-year projections are for the 2023-2024 through the 2027-2028 academic years.

The following clarifications are important to keep in mind when reviewing the data related to employee baseline data. The most recent IPEDS (Integrated Post-Secondary Education Data Survey) was used as the source for this information. It was then adjusted as follows:

- The official IPEDS submitted by the University to the United States Department of Education includes all UNE campuses. For the purposes of this document, all data was adjusted to include the Biddeford campus only, unless specifically indicated otherwise.

    - UNE Employee data is by head count. Full time (FT) equates to 40 hours per week. Part time (PT) equates to less than 40 hours per week. Employees who work less than 20 hours are considered temporary but are required to be included in the IPEDS report as part time employees. The PT employees represented in the chart below are comprised primary of adjunct faculty and staff who are classified as temporary employees. Non-University contract employees (dining services, bookstore, etc.) regularly scheduled to work on the University Campus are not included in these numbers, but are included in the parking demand calculations.

Employee Projections - Biddeford campus only for Fall of:												
	2022		**2023**		**2024**		**2025**		**2026**		**2027**	
Status	FT	PT	FT	PT	FT	PT	FT	PT	FT	PT	FT	PT
FACULTY	178	72	183	44	110	44	120	44	130	44	140	44
STAFF	378	23	381	18	328	18	338	18	348	18	348	18
SUBTOTAL	556	95	564	62	438	62	458	62	478	62	488	62
TOTAL	**651**		**626**		**500**		**520**		**540**		**550**	

a.5 Number of Persons Living on Campus

Residential and Commuter Student Projections - Biddeford campus only for Fall of:						
	2022	**2023**	**2024**	**2025**	**2026**	**2027**
RESIDENTIAL STUDENTS	1505	1410	1420	1440	1475	1515
COMMUTER STUDENTS	897	1095	745	750	760	775
TOTAL	**2402**	**2505**	**2165**	**2190**	**2235**	**2290**

b. Narrative describing how the programs and activities and the number of students and employees, campus residents and program participants are anticipated to change over the next five years.

The University of New England values student-centered, multi- disciplinary and interdisciplinary programs that meet the highest ethical standards to achieve excellence in

support of an integrative approach to the liberal arts, health and the environment, as well as scholarship and research.

The University of New England recognizes that as a comprehensive University, it must continually upgrade and diversify its curriculum, degrees offered and its facilities in order to remain competitive and attract the best students and faculty. Anticipated changes in programs will be partially driven by demographics and challenges linked to industry. Program expansion and changes will also respond to the need to educate an older population, while preparing traditional students to participate in life-long learning experiences. With the changing pedagogy resulting from the rapidly changing technological advances, the University has put significant effort into its On-line offerings. These programs are integrated into the existing programs, as well as those entirely On-line, affording the campus students additional opportunities as well as the ability to complete their degrees in a shorter time period. Additionally, these On-line offering allow for a greater percentage of UNE students to study abroad while maintaining their curriculum requirements.

With the push towards On-line learning, the on-campus Undergraduate population is anticipated to have relatively insignificant growth over the next five years, as indicated in the tables above. However, the overall campus population will reduce significantly in the 2024-2025 academic year, with the relocation of the College of Osteopathic Medicine to the Portland Campus.

The University may also have to adjust programs over time. As a university recognized for its strength in the health professions, we foresee a need to participate in improving the quality of life for people in remote or rural areas of the State. The College of Osteopathic Medicine (COM) health program will assess its academic role in preparing students to work and provide health care for the elderly, Native American, and immigrant populations of the State.

UNE's unique role as the largest educator of health professionals for Maine, its select and comprehensive breadth of health professions degree programs, and its documented leadership in team-based health professions education have made the University an enviable institution in New England and the nation. Relocating the College of Osteopathic Medicine to Portland in July 2024 will "close the loop," creating a comprehensive, fully integrated health sciences campus that can efficiently and effectively tackle Maine's deepest health problems through systemic, coordinated education and clinical practice.

The relocation of the College of Osteopathic Medicine to UNE's Portland Campus will result in a decrease in campus population, bringing the totals to pre-2010 numbers. This move will also afford the opportunity to repurpose the Alfond Center for Health Sciences building on the Biddeford campus to expand existing academic programs and develop new programs to address the critical workforce needs for the state.

The University will also have to evaluate its role in:

- Multimedia pedagogy and multicultural education
- Dual enrollment in institutions
- Providing broad-based resources for distance education
- Developing Competency Based programs to allow for students to opt out of courses by demonstrating competency in those areas
- Developing additional master's degree programs
- Developing nontraditional learning programs

Like many other colleges and universities, the University of New England relies heavily on the income generated from its numerous conferences and continuing education programs to fund a significant portion of the University's operating costs. In doing so, the University avoids passing on those costs to its students in the form of increased tuition. Therefore, the University is able to remain competitive with other educational institutions. Towards that end, new opportunities are continually being explored as a way of operating year-round conferences and continuing education programs. During this vetting process the University considers it physical resources, including parking, and only accepts programs that can fit within the resources available. Thus, any large programs accepted during the academic year would typically be conducted during non-peak academic times.

The University projects the majority of future events and activities in this area will be similar to those listed in section 3.a.2 of this report, and the Office of University Events & Conference Services will continue to expand the current client listing. The COVID Pandemic has had a significant impact of the visitation to campus. UNE expects to increase the number of participants by approximately 25% in the first year of the Master Plan and approximately 5% per year thereafter. This will return the visitation numbers to be closer to the pre-COVID summers.

Below is a table that shows the current daily average and peak number of Office of University Events & Conference Services participants.

Current Total, Average and Peak Conferences Participants for 2021-2022
Biddeford campus only

	Total	Daily Peak	Daily Average
Fall Months (Sept-May)	4769	530	17.5
Summer Months (June-Aug)	1472	491	16

4- **Educational, Research, Residential, Support and Athletic Facilities**

a. A description and plan identifying what buildings and facilities are currently used for these purposes.

A campus plan illustrating the location of all the University Facilities, drawing *MP-101, Existing Conditions Plan*, is located at the rear of Section 2.

1 Hills Beach Road – This 4800sf residential style structure is a residence of the President of UNE. In 2012 it was renovated to allow it to serve as a function space for more intimate gatherings of students, trustees and special guests.

590 Pool St – This 864sf residential style facility is currently vacant. It was constructed in 1981.

Alfond Center for Health Sciences - This 72,372 SF four-story masonry building provides classroom, office, research, and laboratory space for the COM and CAS. It was built in 1996. An Osteopathic Medicine and Manipulation Clinic is located on the third floor where faculty and medical fellows see patients on a limited basis. A café is located on the first floor.

Alumni Cottage (3 Hills Beach Rd) - This 2-story wooden building is used as an office complex.

Assisi Hall - This 16,293 SF three-story brick building is a residence hall that was built in 1962. Rooms are double occupancy throughout with shared restrooms on each floor. A boiler plant is attached to this building.

Athletic Fields/Courts - Two adjacent grass fields, located along Hills Beach Road, are used as intercollegiate fields for soccer, rugby and some organized intramural programs. The artificial turf, Blue Storm Stadium is home to UNE's football and softball teams and is located west of Route 9. The artificial turf, Blue Bolt Field is utilized for the "stick" sports, lacrosse and field hockey, as well as for intramurals. Four tennis courts and a 1/3 mile recreational track are also located on campus.

Avila Hall - This 18,620 SF four-story brick building is a residence hall that was built in 1970. Rooms are typically double occupancy with shared restrooms on each floor. A 2,140 SF lounge is attached for a total of 20,760 SF.

Campus Center - This 58,579 SF masonry building houses recreational facilities, gymnasium, swimming pool, athletic offices, a snack bar/lounge, campus store, and three multi-purpose meeting rooms. It was built in 1989. A 2,675 SF chiller plant was added in 1996 to provide cooling for portions of the campus.

Champlain Hall – This 64,122 SF, four-story masonry structure, was opened in 2005. It is used to house students in double bedroom, suite style accommodations. A staff apartment is located on the main floor.

Creative and Fine Arts (592 Pool Rd) - This 5,120 SF, 2.5 story wooden structure is used as an academic support space and houses art studios and faculty offices. It was built in 1988 as a residence.

Decary Hall - This 77,502 SF masonry structure was built in 1939 with a major addition in 1949. It houses classrooms, research labs, skill development labs, computer labs, and offices.

East Hall - The East Hall opened in the fall of 2002 and is 58,410 SF. It is a masonry building with suites that accommodate four students sharing a living room, kitchenette, and two bathrooms with a private bedroom for each student. A lounge is included in East Hall, as well as support offices for housing staff. A faculty apartment is also included in the building to facilitate a learning community.

Facilities Management Building - This 18,547 SF steel frame building with metal panel walls includes office space for Facilities Management, the Department of Campus Services, and the Department of Safety and Security, central receiving and warehousing for the campus, maintenance shops for the trades and Copy/Mail Services. It opened in the Fall 2002.

Featherman Hall - This 42,018 SF four-story brick building is a residence hall that was built in 2007. Rooms are typically double occupancy with communal restrooms on each floor. There are two classrooms located on the first floor, which serve to assist in promoting a Living and Learning Community environment.

Finance and Administration/Business Office – This 6,960 SF metal building was constructed in 2017, and provides office and support space for the Finance and Administration functions.

Frederick Hall - This two-story 12,156 SF brick-veneer, wood framed building is a residence hall that was built in 1964. Rooms are typically double occupancy with shared restrooms on each floor and wing.

George and Barbara Bush Center - This three-story, 12,422 SF brick building was built in 2008. It houses a café, special collections, meeting and executive office space.

Gregory Hall - This 478 SF single story wood building built in early 1900's is used as an office building.

Harold Alfond Forum – This 143,392 SF, pre-engineered facility, houses an ice area, performance courts, locker rooms, concessions/snackbar, fitness and training centers, offices, classroom and laboratory spaces to support the university's athletic and academic programs. It was originally constructed in 2012, and was added onto in 2018.

Housing Park - The University built twenty one-story and two-story wood units in 1970 to house students. These were removed in the Spring of 2005. One residential unit, re-built in 1993, remains at this site.

Human Resources (588 Pool Rd) - This 4,393 SF wooden structure is used as an office building

Ketchum Library - This three-story 23,688 SF masonry building is the campus library. It was constructed in 1970 with an 8,000 SF addition constructed in 1991.

Kiosk - This canopy structure is located on the waterfront at Jordan Point.

Leonard Hall – This 5,798 SF masonry structure was renovated in 2013 and serves as a large interactive classroom facility. It is attached to Decary Hall.

Marcil Hall - This 21,420 SF steel frame unit block veneer building built in 1994 is primarily a classroom building with administrative office space for faculty.

Girard Marine Science Education and Research Center - This 26,744 SF steel frame building with brick veneer was built in 2001. It is used as a marine mammal rehabilitation and research center. Marine laboratories, classroom, and faculty offices are provided. A pump house, situated near the waterfront, pumps seawater to the saltwater storage tank on the site, which in turn is utilized in the Marine Science Education and Research Center.

Morgane Hall - This 25,800 SF brick building academic building, house sciences labs, classrooms and offices. It was constructed in 2008.

Padua Hall - This 13,368 SF three-story brick building is a residence hall that was built in 1962. Rooms are typically double occupancy with shared restrooms on each floor.

Petts Center – This 9,040 SF two-story wood frame building built in 1984 serves as a student health clinic, as well as an academic and administrative support facility.

Pickus Center for Biomedical Research - This 22,086 SF brick structure house labs and office in support of biomedical research. It was completed in 2008.

Ripich Commons – This 60,340 SF, four story student center was constructed in 2017 and houses student support services and the main dining facility.

Siena Hall - This 13,368 SF three-story brick building is a residence hall that was built in 1962. Rooms are typically double occupancy with shared restrooms on each floor.

Sokokis Hall – This four-story, 104,813 SF residence hall was constructed in 2010. Students reside in single and double bedroom suites.

Staging and Storage area - This area is used for staging of landscaping and surplus materials, and a staging area for construction projects. Soils for construction projects are often processed in this area before being transported to the actual project site. This use is approved by both the DEP and City of Biddeford. Several containers are also located at

the former landfill area and are used to store surplus property and new furniture during construction projects.

Stella Maris - This 32,450 SF, 4-story wood frame building was built in the mid 1700's. In 1978, half of the building was removed and a concrete block addition was added to support the College of Osteopathic Medicine. The building provides administrative offices, classrooms, research labs and faculty offices.

Storage sheds - A sand and salt storage facility and storage shed are located to the rear of the Facilities Management building. Other sheds are located on campus for storage of materials and equipment.

Student Academic Success Center - This 3,100 SF wooden building was built in 1940's. The facility is used as a Learning Center for Math and Writing Skills in support of all academic programs.

Waste Water Treatment Plant - This 4,300 SF masonry building was built in 1988 and expanded in 1993 and serves most of the buildings on campus.

Waterfront Activities Storage Facility/Docks - These structures support the waterfront and research programs and were built in 2001 and 2015.

West Hall - The West Hall opened in the fall of 2002 and is 40,339 SF. It is a masonry building with suites that accommodate four students sharing a living room, kitchenette, and two bathrooms with a private bedroom for each student. A faculty apartment is also included in the building to facilitate a learning community.

b. *The current bed capacity of all residence buildings and anticipated change in the total bed capacity.*

	Occupancy
Assisi Hall	75
Avila Hall	102
Champlain Hall	206
East Hall	179
Featherman Hall	226
Frederick Hall	71
Housing Park	2
Padua Hall	70
Siena Hall	73
Sokokis Hall	299
West Hall	127
Total	1430

The counts represented above reflect current bed capacity based on double occupancy in rooms designed for double occupancy and single occupancy in rooms designed for single occupancy. Featherman Hall is listed as triples. At times the University has more demand

for housing than can be made available utilizing double occupancy, and will "triple" double occupancy rooms to accommodate the extra demand. The actual number of residential students is provided in section 3. While "tripling" is common practice at most institutions of higher education, it is not the preferred situation. The University's goal in respect to residential housing capacity is to increase the capacity to meet its three-year residency requirement and minimize "tripling". Housing projects will be completed as the actual numbers of potential residential students warrant them. The Conceptual Development Plan, located in section 10, includes the potential of adding 300 beds.

c. *A description of any significant changes in the type of use made of existing buildings, significant expansions of existing buildings, or new buildings and facilities that are to be needed over the next five years.*

See text below.

d. A description of how the anticipated changes in facilities relate to program changes and the institution's mission.

See text below.

Overview of section 4c and d

Over the next five years, we may create new space for: additional housing, additional athletic venues, improved athletic facilities, expansions to our academic and research buildings, and student support services facilities. These essential improvements are critical to the health and viability of the University. The potential projects listed are all possible options for the University. However, the University does not intend to complete all of these projects within the period of this Master Plan.

The new buildings, renovations and sports facilities/venues support the mission of the University. The improvements enable delivery of quality instruction, as well as improved extracurricular and community outreach programs, all of which will enhance teaching and learning. For locations of potential areas to be developed, please refer to the *Concept Campus Plan-Five Year Development Strategy* plan in the back of section 10.

The University is developing a stronger reputation as a research university to meet accreditation requirements and to attract outstanding scholars and funding agencies. This goal requires additional research, teaching and meeting facilities, which will lead to a greater success by faculty and student researchers.

Below is an outline of the potential projects over the next 5 years. These projects will be prioritized based on ability to finance and actual programmatic need. Each building may include a combination of the needs as listed below.

Academic, Research and Administration Facilities

Research is a strategic goal of all of the University and is an integral component of our Mission Statement. Expansions of our research facilities will enable the University to continue to grow in this strategic area.

Classrooms, laboratories, and offices may need to be added as enrollment increases or to meet pedagogical changes. Space may be added by combining with an existing research, residential, or support building complex.

Housing, Student Services, and Athletic Facilities

Additional new **Student Housing** may be added based on the projection for residential students. These may be similar in style and scale as the residence halls recently constructed and will be located on the west side of Route 9.

Athletic field(s)/Courts/Track may be constructed to extend the playing season and to better compete with other peer institutions. These projects may have associated storage/press box facilities constructed with them.

Campus Center addition(s) may be necessary to provide for additional recreational space, meeting/activities spaces, offices, and/or an expansion to the natatorium.

Waterfront Access for Research and Recreation - increasing use of the waterfront for academic and research activities has resulted in a demand for year-round dock facilities. The current seasonal research facility limits the access to the water, thus a more permanent pier is required for the extensive programming being conducted. The ideal location for this year-round facility would be adjacent to the Girard Marine Science and Education Center.

The University has initiated crew and sailing programs, resulting in an increased demand for access to the waterfront for recreational and intercollegiate activities as well, and thus is looking to make the existing seasonal dock a permanent installation, with only the floats being removed annually.

Support Facilities

Parking is required by local and state regulatory agencies as a condition of granting building permits to meet anticipated needs of programs. A combination of on grade and structured parking is being considered. In addition to the construction of new lots shown, an effort will be made to re-configure existing lots throughout the campus to increase capacity and accessibility.

Miscellaneous Roadway and Walkway Improvements and Additions will be needed to improve pedestrian access on campus and reduce pedestrian vehicular conflicts. This may also include handicap accessible access to the trail system along the shoreline and to Freddy Beach.

Storage/Recycling Facilities may need to be constructed to replace the storage trailers being used for this purpose. Additional storage facilities may be required to support other activities, such as recreation, athletics and research. These would need to be appropriately located, dependent on their use.

Additional **heating and cooling facilities** may be needed to support the new facilities. These may be added through a combination of central and decentralized heating and cooling facilities similar to those attached to Assisi Hall and the Campus Center.

An addition to the **Wastewater Treatment Facility** may be required if the projected water usage is greater than anticipated.

Temporary Facilities

As with most educational facilities, some **temporary facilities** may be needed to provide space during construction of new buildings as well as to accommodate unanticipated needs on short notice. This will likely be modular units, which might be used for **support, office, teaching and research, and/or housing**. Final locations will be determined based on need, access to parking and utilities and relevant site plan review criteria.

5- Parking and Traffic

a. Information on current traffic volumes and conditions including Levels of Service on the principal public streets and intersections of public streets within the Zone and on the primary access routes to the campus.

Please see the attached *University of New England, Biddeford Maine Master Plan Traffic Analysis* prepared by Sewall.

b. A description of anticipated changes in traffic volumes over the next five years resulting from the changes in programs and facilities included in the Master Plan.

Please see the attached *University of New England, Biddeford Maine Master Plan Traffic Analysis* prepared by Sewall.

c. An analysis of the impact of these changes on traffic flow and vehicular and pedestrian safety on public streets within the Zone and that provide access to the campus.

Please see the attached *University of New England, Biddeford Maine Master Plan Traffic Analysis* prepared by Sewall.

d. A proposed program of improvements to address any unacceptable impacts resulting from changes in traffic volumes including activities that will be undertaken to mitigate any adverse impacts on adjacent residential neighborhoods.

Please see the attached *University of New England, Biddeford Maine Master Plan Traffic Analysis* prepared by Sewall.

e. Information on the number and location of existing parking spaces.

Please refer to *Drawing P-100, Existing Parking Plan,* which is located at the rear of this section.

f. An analysis of the adequacy of the existing parking to meet anticipated changes in programs and facilities over the next five years.

Please refer to the *Parking and Transportation Demand Management - 2022* report at the rear of this section.

g. An assessment of pedestrian and bicycle movements and safety related to the parking supply and locations.

All existing primary pedestrian/bike paths are 8' wide, and all secondary pedestrian/bike paths are 6' wide. The existing path network is satisfactory to meet the needs of both pedestrians and bicyclists. Dedicated bike lanes are not required as there is adequate

width to the existing walkway and roadway system. Furthermore, these dual use paths are more than sufficient, given the relatively limited biking season during student residence periods (arriving approximately mid-September and leaving early to mid May).

The Director of the Safety and Security Department was contacted in regards to concerns related to the increased use of bicycles on campus. He indicated that annually, all residential students were required to participate in an educational session in regards to bicycle safety and the Maine laws related to bicycling. This session was presented to the students by the Biddeford Police Department. He stated that there have been no significant issues raised to date in regards to bicycle and vehicular interactions.

h. A proposed program of parking improvements to meet any identified deficiencies.

Please refer to the *Parking and Transportation Demand Management - 2022* report at the rear of this section.

To insure a more precise analysis, all University and non-University contract employees regularly scheduled to work on the University Campus were included in this study.

The proposed parking facilities are illustrated on the *Campus Master Plan -Five Year Development Strategy* plan in the back of section 10.

UNIVERSITY OF NEW ENGLAND
BIDDEFORD, MAINE
MASTER PLAN TRAFFIC ANALYSIS

INTRODUCTION

This memorandum is written to summarize traffic assessment performed for the update of the University of New England (UNE) Master Plan for their Biddeford, Maine campus. The City of Biddeford's requirements for the plan related to traffic are outlined below:

a. Information on current traffic volumes and conditions including levels of service on the principal public streets and intersections of public streets within the zone and on the primary access routes to the campus.

b. A description of anticipated changes in traffic volumes over the next five years resulting from the changes in programs and facilities included in the master plan.

c. An analysis of the impact of these changes on traffic flow and vehicular and pedestrian safety on public streets within the zone and that provide access to the campus.

d. A proposed program of improvements to address any unacceptable impacts resulting from changes in traffic volumes including activities that will be undertaken to mitigate any adverse impacts on adjacent residential neighborhoods.

EXISTING TRAFFIC VOLUMES

Access to the Biddeford campus is provided by Pool Street (Route 9/208). Average annual daily traffic (AADT) data for the vicinity of the campus was obtained from the Maine Department of Transportation's (MaineDOT's) 2014 and 2019 Traffic Count Books as well as their Interactive Traffic Map. This data is summarized in the following table:

Location	Average Annual Daily Traffic 2010	2013	2016	2019
Pool Street, southeast of Meetinghouse Road	6730	5010	---	5950
Pool Street, northwest of Hills Beach Road	---	5990	5860	---
Pool Street, south of Hills Beach Road	3650	3430	3300	---
Pool Street, south of Newtown Road	---	3310	---	---
Hills Beach Road, northeast of Old Pool Road	---	1920	1510	---
Hills Beach Road, southeast of Pool Street	--	---	1990	---

As seen above, traffic volumes in the vicinity of the campus have declined from 2010 to 2019.

Turning movement counts were performed by Sewall at key intersections to determine existing volumes for capacity and level of service analysis purposes. The counts were conducted during the PM peak hour period (3:00 – 6:00), typically the highest volume hours of the day on Maine roadways. The count dates and peak hours are as follows:

Intersection	Count Date	Peak Hour
Pool Street and Hills Beach Road	11/4/21	3:15 – 4:15
Pool Street and Newtown Road	11/3/21	4:30 – 5:30
Pool Street, Hedley Reynolds Way and UNE drive	11/10/21	4:00 – 5:00
Pool Street and easterly Parking Lot	11/17/21	4:00 – 5:00

The above counts were factored to peak school year conditions, which occur in September, using MaineDOT group mean factors. The UNE drive volumes were not seasonally adjusted since they are expected to be consistent during the fall and spring semesters. The resulting September 2021 volumes are shown in Figure 1. Given that volumes have been declining, based upon the historical count data, a 2 % growth rate was utilized to project the 2021 to 2022 conditions to be conservative. The results are shown in Figure 2.

EXISTING CONDITIONS ANALYSIS

Traffic operations are evaluated in terms of level of service (LOS). Level of service is a qualitative measure that describes operations by letter designation. The levels range from A - very little delay to F - extreme delays. Level of service "D" is generally considered acceptable in urban locations while LOS "E" is generally considered the capacity of a facility and the minimum tolerable level. The level of service for unsignalized intersections is based upon average control delay per vehicle for each minor, opposed movement, as defined below:

Unsignalized Intersection Level of Service

LOS	Delay Range
A	< = 10.0 seconds
B	> 10.0 and <= 15.0
C	> 15.0 and <= 25.0
D	> 25.0 and <= 35.0
E	> 35.0 and <= 50.0
F	> 50.0

Level of service was determined for the primary campus intersections utilizing Synchro 11 and SimTraffic under the September 2022 volumes. The results for the PM peak hour analysis period, with the LOS followed by the delay in seconds, are summarized in the following tables:

Pool Street, Hills Beach Road & Seastar Market
PM Peak Hour Level of Service

Approach/Movement	Existing 2022
Eastbound Market Drive	A (7.3)
Westbound Hills Beach Road	A (6.7)
Northbound Lefts into Market	A (2.0)
Northbound Throughs/Rights	A (1.2)
Northbound Pool Street Overall	A (1.3)
South Lefts onto Hills Beach Road	A (3.0)
Southbound Throughs/Rights	A (1.4)
Southbound Pool Street Overall	A (2.1)
Overall Intersection	**A (3.3)**

Pool Street & Newtown Road
PM Peak Hour Level of Service

Approach/Movement	Existing 2022
Eastbound Newtown Road	A (5.6)
Westbound Newtown Road	A (5.4)
Northbound Pool Street	A (0.9)
Southbound Pool Street	A (0.8)
Overall Intersection	**A (1.8)**

Pool Street, Hedley Reynolds Way & UNE Drive
PM Peak Hour Level of Service

Approach/Movement	Existing 2022
Eastbound Hedley Reynolds Way Lefts	A (5.8)
Eastbound Hedley Reynolds Way Throughs/Rights	A (6.6)
Eastbound Hedley Reynolds Way Overall	A (6.4)
Westbound UNE Drive	A (5.5)
Northbound Pool Street	A (0.6)
Southbound Pool Street	A (1.0)
Overall Intersection	**A (2.0)**

As seen in the preceding tables, the level of service is currently "A" under peak September volumes for all movements at all primary access intersections. There are no capacity concerns at any of the primary access intersections and the results demonstrate that Pool Street has capacity to accommodate additional UNE trips.

SAFETY AND ACCIDENT REVIEW

The Maine Department of Transportation uses two criteria to determine high crash locations (HCLs). The first is the critical rate factor (CRF), which is a measure of the accident rate. A CRF greater than one indicates a location which has a higher than expected crash rate. The expected rate is calculated as a statewide average of similar facilities.

The second criterion, which must also be met, is based upon the number of accidents that occur at a particular location. Eight or more accidents must occur over the three-year study period for the location to be considered a high crash location. Accident data was obtained from MaineDOT for the vicinity of the campus for the most recent 3-year period, 2019 to 2021. The data is attached to this memorandum. There are no high crash locations (meeting both high crash criteria) within the following study area:

- Pool Street between Kennebunkport Town Line and Alfred Street (Route 111)
- Hills Beach Road between Pool Street and Long Avenue
- Old Pool Road between Hills Beach Road and Day's Landing

As a result, no safety deficiencies or concerns were identified, and no additional accident evaluation is necessary.

PROJECTED UNIVERSITY VOLUMES AND IMPACTS

Trip generation analysis was performed for the existing enrollment and projected enrollment at the end of the five-year plan period. Land use code (LUC) 550 – University/College was utilized from the most recent Institute of Transportation Engineers (ITE) "Trip Generation, 11th Edition". The calculations were performed on the basis of the 2,402 current students and projected 2,290 students in fall of 2027. The results are summarized in the table on the following page:

ITE TRIP GENERATION

Time Period	Existing	Projected	Change
Weekday	5,424	5,270	- 154
AM Peak Hour – Adjacent Steet + Gen.	360	344	-16
Entering	281	268	-13
Exiting	79	76	-3
PM Peak Hour – Adjacent Steet + Gen.	360	344	-16
Entering	115	110	-5
Exiting	245	234	-11

As seen above, based upon the ITE data, the existing campus generates approximately 360 one-way trips during both the AM and PM peak hours. At the end of the five-year plan period, with the projected decline in enrollment, there will be 344 one-way trips in peak hours. Given the small decrease in peak hour trip generation, no off-site impact on traffic operations would be expected. Additionally, since all primary intersections are currently operating at a good level of service “A”, and since the Pool Street volumes have not been increasing historically, and since university enrollments are projected to drop over the five-year plan period all intersections would be expected to remain at level of service “A”.

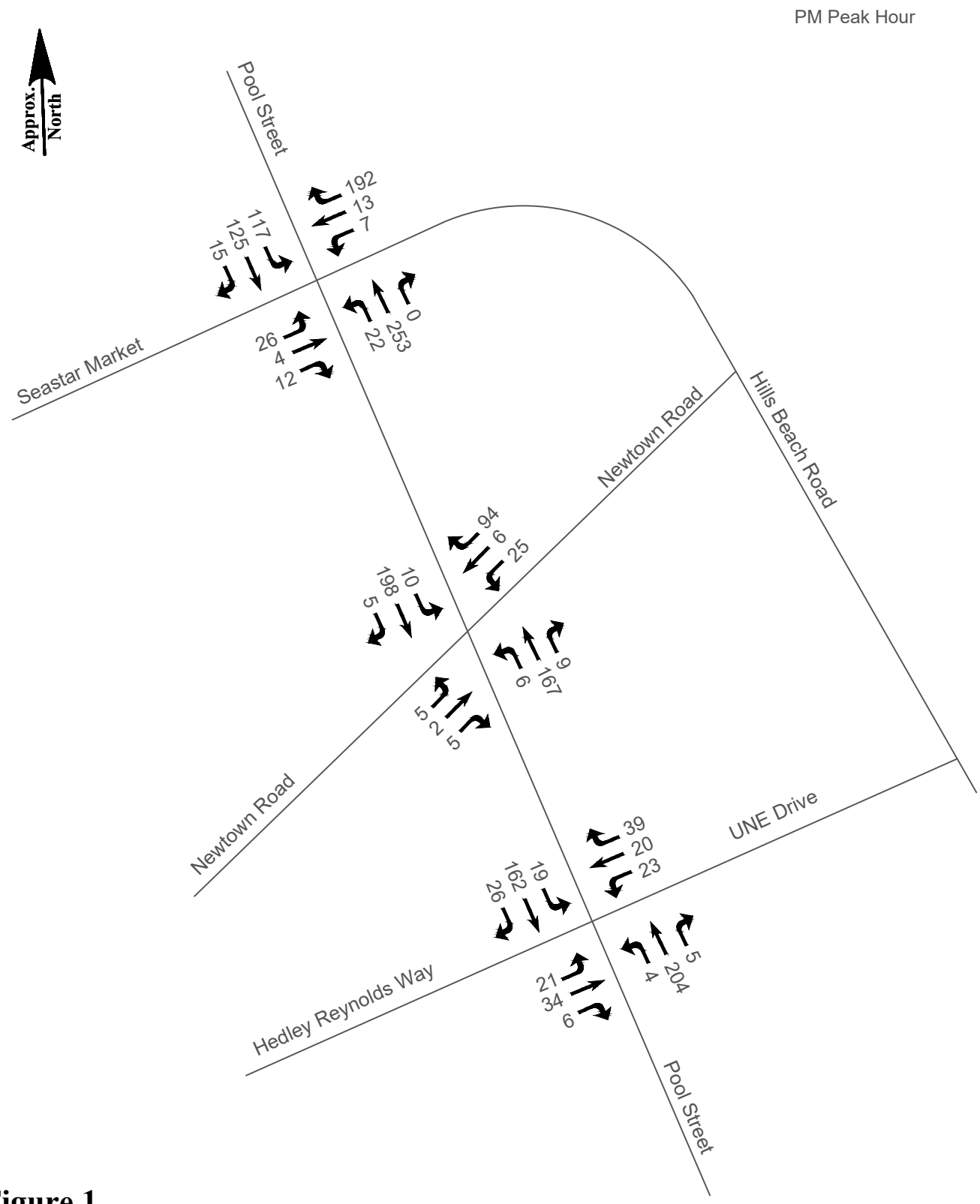

Figure 1

Existing 2021 Peak Hour Volumes
UNE, Biddeford
Biddeford, Maine

Sewall
The evolution of expertise
A TPK Company

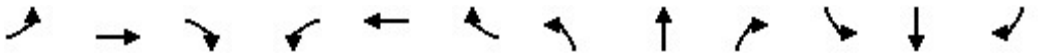

Lane Group	EBL	EBT	EBR	WBL	WBT	WBR	NBL	NBT	NBR	SBL	SBT	SBR
Lane Configurations												
Traffic Volume (vph)	5	2	5	25	6	94	6	167	9	10	198	5
Future Volume (vph)	5	2	5	25	6	94	6	167	9	10	198	5
Ideal Flow (vphpl)	1900	1900	1900	1900	1900	1900	1900	1900	1900	1900	1900	1900
Lane Util. Factor	1.00	1.00	1.00	1.00	1.00	1.00	1.00	1.00	1.00	1.00	1.00	1.00
Ped Bike Factor												
Frt		0.943			0.899			0.993			0.997	
Flt Protected		0.979			0.990			0.998			0.998	
Satd. Flow (prot)	0	1624	0	0	1674	0	0	1828	0	0	1853	0
Flt Permitted		0.979			0.990			0.998			0.998	
Satd. Flow (perm)	0	1624	0	0	1674	0	0	1828	0	0	1853	0
Link Speed (mph)		25			25			35			35	
Link Distance (ft)		1134			440			1148			848	
Travel Time (s)		30.9			12.0			22.4			16.5	
Confl. Peds. (#/hr)	1		1	19		19	4		4	1		1
Confl. Bikes (#/hr)									1			
Peak Hour Factor	0.47	0.47	0.47	0.86	0.86	0.86	0.93	0.93	0.93	0.87	0.87	0.87
Heavy Vehicles (%)	8%	8%	8%	1%	1%	1%	3%	3%	3%	2%	2%	2%
Adj. Flow (vph)	11	4	11	29	7	109	6	180	10	11	228	6
Shared Lane Traffic (%)												
Lane Group Flow (vph)	0	26	0	0	145	0	0	196	0	0	245	0
Enter Blocked Intersection	No	No	No	No	No	No	No	No	No	No	No	No
Lane Alignment	Left	Left	Right	Left	Left	Right	Left	Left	Right	Left	Left	Right
Median Width(ft)		0			0			12			12	
Link Offset(ft)		0			0			0			0	
Crosswalk Width(ft)		16			16			16			16	
Two way Left Turn Lane											Yes	
Headway Factor	1.00	1.00	1.00	1.00	1.00	1.00	1.00	1.00	1.00	1.00	1.00	1.00
Turning Speed (mph)	15		9	15		9	15		9	15		9
Sign Control		Stop			Stop			Free			Free	

Intersection Summary			
Area Type:	Other		
Control Type: Unsignalized			
Intersection Capacity Utilization 32.9%		ICU Level of Service A	
Analysis Period (min) 15			

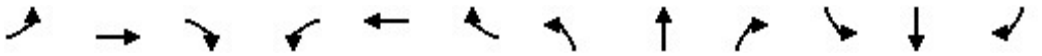

Lane Group	EBL	EBT	EBR	WBL	WBT	WBR	NBL	NBT	NBR	SBL	SBT	SBR
Lane Configurations												
Traffic Volume (vph)	26	4	12	7	13	192	22	253	0	117	125	15
Future Volume (vph)	26	4	12	7	13	192	22	253	0	117	125	15
Ideal Flow (vphpl)	1900	1900	1900	1900	1900	1900	1900	1900	1900	1900	1900	1900
Storage Length (ft)	0		0	0		0	300		0	200		0
Storage Lanes	0		0	0		0	1		0	1		0
Taper Length (ft)	25			25			25			25		
Lane Util. Factor	1.00	1.00	1.00	1.00	1.00	1.00	1.00	1.00	1.00	1.00	1.00	1.00
Ped Bike Factor												
Frt		0.962			0.878						0.984	
Flt Protected		0.970			0.998		0.950			0.950		
Satd. Flow (prot)	0	1721	0	0	1616	0	1736	1827	0	1752	1815	0
Flt Permitted		0.970			0.998		0.950			0.950		
Satd. Flow (perm)	0	1721	0	0	1616	0	1736	1827	0	1752	1815	0
Link Speed (mph)		30			25			35			35	
Link Distance (ft)		97			1075			848			1355	
Travel Time (s)		2.2			29.3			16.5			26.4	
Confl. Peds. (#/hr)	1		1				3		3			
Peak Hour Factor	0.83	0.83	0.83	0.82	0.82	0.82	0.85	0.85	0.85	0.74	0.74	0.74
Heavy Vehicles (%)	3%	3%	3%	3%	3%	3%	4%	4%	4%	3%	3%	3%
Adj. Flow (vph)	31	5	14	9	16	234	26	298	0	158	169	20
Shared Lane Traffic (%)												
Lane Group Flow (vph)	0	50	0	0	259	0	26	298	0	158	189	0
Enter Blocked Intersection	No	No	No	No	No	No	No	No	No	No	No	No
Lane Alignment	Left	Left	Right	Left	Left	Right	Left	Left	Right	Left	Left	Right
Median Width(ft)		0			0			12			12	
Link Offset(ft)		0			0			0			0	
Crosswalk Width(ft)		16			16			16			16	
Two way Left Turn Lane								Yes			Yes	
Headway Factor	1.00	1.00	1.00	1.00	1.00	1.00	1.00	1.00	1.00	1.00	1.00	1.00
Turning Speed (mph)	15		9	15		9	15		9	15		9
Sign Control		Stop			Stop			Free			Free	

Intersection Summary			
Area Type:	Other		
Control Type: Unsignalized			
Intersection Capacity Utilization 45.7%		ICU Level of Service A	
Analysis Period (min) 15			

Lane Group	EBL	EBT	EBR	WBL	WBT	WBR	NBL	NBT	NBR	SBL	SBT	SBR
Lane Configurations												
Traffic Volume (vph)	21	34	6	23	20	39	4	204	5	19	162	26
Future Volume (vph)	21	34	6	23	20	39	4	204	5	19	162	26
Ideal Flow (vphpl)	1900	1900	1900	1900	1900	1900	1900	1900	1900	1900	1900	1900
Storage Length (ft)	100		0	0		0	0		0	0		0
Storage Lanes	1		0	0		0	0		0	0		0
Taper Length (ft)	25			25			25			25		
Lane Util. Factor	1.00	1.00	1.00	1.00	1.00	1.00	1.00	1.00	1.00	1.00	1.00	1.00
Frt		0.978			0.936			0.997			0.983	
Flt Protected	0.950				0.986			0.999			0.995	
Satd. Flow (prot)	1736	1787	0	0	1736	0	0	1802	0	0	1770	0
Flt Permitted	0.950				0.986			0.999			0.995	
Satd. Flow (perm)	1736	1787	0	0	1736	0	0	1802	0	0	1770	0
Link Speed (mph)		25			25			35			35	
Link Distance (ft)		662			749			1070			1148	
Travel Time (s)		18.1			20.4			20.8			22.4	
Peak Hour Factor	0.59	0.59	0.59	0.73	0.73	0.73	0.76	0.76	0.76	0.86	0.86	0.86
Heavy Vehicles (%)	4%	4%	4%	1%	1%	1%	5%	5%	5%	5%	5%	5%
Adj. Flow (vph)	36	58	10	32	27	53	5	268	7	22	188	30
Shared Lane Traffic (%)												
Lane Group Flow (vph)	36	68	0	0	112	0	0	280	0	0	240	0
Enter Blocked Intersection	No	No	No	No	No	No	No	No	No	No	No	No
Lane Alignment	Left	Left	Right	Left	Left	Right	Left	Left	Right	Left	Left	Right
Median Width(ft)		12			12			0			0	
Link Offset(ft)		0			0			0			0	
Crosswalk Width(ft)		16			16			16			16	
Two way Left Turn Lane												
Headway Factor	1.00	1.00	1.00	1.00	1.00	1.00	1.00	1.00	1.00	1.00	1.00	1.00
Turning Speed (mph)	15		9	15		9	15		9	15		9
Sign Control		Stop			Stop			Free			Free	

Intersection Summary			
Area Type:	Other		
Control Type: Unsignalized			
Intersection Capacity Utilization 38.8%		ICU Level of Service A	
Analysis Period (min) 15			

Summary of All Intervals

Run Number	1	2	3	4	5	Avg
Start Time	3:50	3:50	3:50	3:50	3:50	3:50
End Time	5:00	5:00	5:00	5:00	5:00	5:00
Total Time (min)	70	70	70	70	70	70
Time Recorded (min)	60	60	60	60	60	60
# of Intervals	2	2	2	2	2	2
# of Recorded Intervals	1	1	1	1	1	1
Vehs Entered	1090	1142	1078	1078	1054	1088
Vehs Exited	1094	1141	1076	1084	1056	1090
Starting Vehs	17	18	13	23	21	13
Ending Vehs	13	19	15	17	19	16
Travel Distance (mi)	567	592	543	567	533	560
Travel Time (hr)	20.4	21.6	19.8	20.3	19.3	20.2
Total Delay (hr)	1.8	2.1	1.8	1.8	1.7	1.9
Total Stops	583	612	593	567	561	582
Fuel Used (gal)	18.6	19.7	17.9	18.7	17.5	18.5

Interval #0 Information Seeding

Start Time	3:50
End Time	4:00
Total Time (min)	10

Volumes adjusted by Growth Factors.
No data recorded this interval.

Interval #1 Information Recording

Start Time	4:00
End Time	5:00
Total Time (min)	60

Volumes adjusted by Growth Factors.

Run Number	1	2	3	4	5	Avg
Vehs Entered	1090	1142	1078	1078	1054	1088
Vehs Exited	1094	1141	1076	1084	1056	1090
Starting Vehs	17	18	13	23	21	13
Ending Vehs	13	19	15	17	19	16
Travel Distance (mi)	567	592	543	567	533	560
Travel Time (hr)	20.4	21.6	19.8	20.3	19.3	20.2
Total Delay (hr)	1.8	2.1	1.8	1.8	1.7	1.9
Total Stops	583	612	593	567	561	582
Fuel Used (gal)	18.6	19.7	17.9	18.7	17.5	18.5

3: Pool Street & Newtown Road Performance by lane

Lane	EB	WB	NB	SB	All
Movements Served	LTR	LTR	LTR	LTR	
Denied Del/Veh (s)					0.1
Total Del/Veh (s)	6.6	6.3	0.9	0.8	2.1

6: Pool Street & Seastar Market/Hills Beach Road Performance by lane

Lane	EB	WB	NB	NB	SB	SB	All
Movements Served	LTR	LTR	L	TR	L	TR	
Denied Del/Veh (s)							0.6
Total Del/Veh (s)	7.1	6.9	1.8	1.2	2.9	1.4	3.3

9: Pool Street & Hedley Reynolds Way/UNE Driveway Performance by lane

Lane	EB	EB	WB	NB	SB	All
Movements Served	L	TR	LTR	LTR	LTR	
Denied Del/Veh (s)						0.2
Total Del/Veh (s)	5.4	6.5	5.5	0.5	1.1	1.9

Total Network Performance

Denied Del/Veh (s)	0.6
Total Del/Veh (s)	5.5

Intersection: 3: Pool Street & Newtown Road

Movement	EB	WB	NB	SB
Directions Served	LTR	LTR	LTR	LTR
Maximum Queue (ft)	29	93	17	24
Average Queue (ft)	8	39	1	3
95th Queue (ft)	26	68	9	13
Link Distance (ft)	1073	393	1059	762
Upstream Blk Time (%)				
Queuing Penalty (veh)				
Storage Bay Dist (ft)				
Storage Blk Time (%)				
Queuing Penalty (veh)				

Intersection: 6: Pool Street & Seastar Market/Hills Beach Road

Movement	EB	WB	NB	NB	SB	SB
Directions Served	LTR	LTR	L	TR	L	TR
Maximum Queue (ft)	60	124	22	4	55	4
Average Queue (ft)	21	48	2	0	21	0
95th Queue (ft)	49	89	13	3	47	3
Link Distance (ft)	55	1025		762		1318
Upstream Blk Time (%)	0					
Queuing Penalty (veh)	0					
Storage Bay Dist (ft)			300		200	
Storage Blk Time (%)						
Queuing Penalty (veh)						

Intersection: 9: Pool Street & Hedley Reynolds Way/UNE Driveway

Movement	EB	EB	WB	NB	SB
Directions Served	L	TR	LTR	LTR	LTR
Maximum Queue (ft)	53	69	58	10	40
Average Queue (ft)	14	27	31	0	5
95th Queue (ft)	42	55	53	5	24
Link Distance (ft)		634	721	1036	1059
Upstream Blk Time (%)					
Queuing Penalty (veh)					
Storage Bay Dist (ft)	100				
Storage Blk Time (%)					
Queuing Penalty (veh)					

Network Summary

Network wide Queuing Penalty: 0

Summary of All Intervals

Run Number	1	2	3	4	5	Avg
Start Time	3:50	3:50	3:50	3:50	3:50	3:50
End Time	5:00	5:00	5:00	5:00	5:00	5:00
Total Time (min)	70	70	70	70	70	70
Time Recorded (min)	60	60	60	60	60	60
# of Intervals	2	2	2	2	2	2
# of Recorded Intervals	1	1	1	1	1	1
Vehs Entered	1090	1142	1078	1078	1054	1088
Vehs Exited	1094	1141	1076	1084	1056	1090
Starting Vehs	17	18	13	23	21	13
Ending Vehs	13	19	15	17	19	16
Travel Distance (mi)	567	592	543	567	533	560
Travel Time (hr)	20.4	21.6	19.8	20.3	19.3	20.2
Total Delay (hr)	1.8	2.1	1.8	1.8	1.7	1.9
Total Stops	583	612	593	567	561	582
Fuel Used (gal)	18.6	19.7	17.9	18.7	17.5	18.5

Interval #0 Information Seeding

Start Time	3:50
End Time	4:00
Total Time (min)	10

Volumes adjusted by Growth Factors.
No data recorded this interval.

Interval #1 Information Recording

Start Time	4:00
End Time	5:00
Total Time (min)	60

Volumes adjusted by Growth Factors.

Run Number	1	2	3	4	5	Avg
Vehs Entered	1090	1142	1078	1078	1054	1088
Vehs Exited	1094	1141	1076	1084	1056	1090
Starting Vehs	17	18	13	23	21	13
Ending Vehs	13	19	15	17	19	16
Travel Distance (mi)	567	592	543	567	533	560
Travel Time (hr)	20.4	21.6	19.8	20.3	19.3	20.2
Total Delay (hr)	1.8	2.1	1.8	1.8	1.7	1.9
Total Stops	583	612	593	567	561	582
Fuel Used (gal)	18.6	19.7	17.9	18.7	17.5	18.5

3: Pool Street & Newtown Road Performance by approach

Approach	EB	WB	NB	SB	All
Denied Del/Veh (s)	0.1	0.2	0.0	0.1	0.1
Total Del/Veh (s)	6.6	6.3	0.9	0.7	2.1

6: Pool Street & Seastar Market/Hills Beach Road Performance by approach

Approach	EB	WB	NB	SB	All
Denied Del/Veh (s)	0.1	0.2	0.0	1.6	0.6
Total Del/Veh (s)	7.1	6.9	1.3	2.1	3.3

9: Pool Street & Hedley Reynolds Way/UNE Driveway Performance by approach

Approach	EB	WB	NB	SB	All
Denied Del/Veh (s)	1.3	0.1	0.2	0.0	0.2
Total Del/Veh (s)	6.2	5.5	0.5	1.1	1.9

Total Network Performance

Denied Del/Veh (s)	0.6
Total Del/Veh (s)	5.5

Intersection: 3: Pool Street & Newtown Road

Movement	EB	WB	NB	SB
Directions Served	LTR	LTR	LTR	LTR
Maximum Queue (ft)	29	93	17	24
Average Queue (ft)	8	39	1	3
95th Queue (ft)	26	68	9	13
Link Distance (ft)	1073	393	1059	762
Upstream Blk Time (%)				
Queuing Penalty (veh)				
Storage Bay Dist (ft)				
Storage Blk Time (%)				
Queuing Penalty (veh)				

Intersection: 6: Pool Street & Seastar Market/Hills Beach Road

Movement	EB	WB	NB	NB	SB	SB
Directions Served	LTR	LTR	L	TR	L	TR
Maximum Queue (ft)	60	124	22	4	55	4
Average Queue (ft)	21	48	2	0	21	0
95th Queue (ft)	49	89	13	3	47	3
Link Distance (ft)	55	1025		762		1318
Upstream Blk Time (%)	0					
Queuing Penalty (veh)	0					
Storage Bay Dist (ft)			300		200	
Storage Blk Time (%)						
Queuing Penalty (veh)						

Intersection: 9: Pool Street & Hedley Reynolds Way/UNE Driveway

Movement	EB	EB	WB	NB	SB
Directions Served	L	TR	LTR	LTR	LTR
Maximum Queue (ft)	53	69	58	10	40
Average Queue (ft)	14	27	31	0	5
95th Queue (ft)	42	55	53	5	24
Link Distance (ft)		634	721	1036	1059
Upstream Blk Time (%)					
Queuing Penalty (veh)					
Storage Bay Dist (ft)	100				
Storage Blk Time (%)					
Queuing Penalty (veh)					

Network Summary

Network wide Queuing Penalty: 0

Crash Summary Report

Report Selections and Input Parameters

REPORT SELECTIONS

☑ **Crash Summary I** ☐ **Section Detail** ☑ **Crash Summary II** ☐ **1320 Public** ☐ **1320 Private** ☐ **1320 Summary**

REPORT DESCRIPTION

Biddeford
UNE Master Plan

REPORT PARAMETERS

Year 2018, Start Month 1 through Year 2020 End Month: 12

Route: **0009X**	Start Node: **54694**	Start Offset: **0**	☐ **Exclude First Node**
	End Node: **54740**	End Offset: **0**	☐ **Exclude Last Node**
Route: **3111398**	Start Node: **53380**	Start Offset: **0**	☑ **Exclude First Node**
	End Node: **54703**	End Offset: **0**	☑ **Exclude Last Node**
Route: **3110079**	Start Node: **53560**	Start Offset: **0**	☐ **Exclude First Node**
	End Node: **53380**	End Offset: **0**	☑ **Exclude Last Node**
Route: **3101398**	Start Node: **59177**	Start Offset: **0**	☐ **Exclude First Node**
	End Node: **53380**	End Offset: **0**	☐ **Exclude Last Node**

Crash Summary I

Nodes

Node	Route - MP	Node Description	U/R	Total Crashes	Injury Crashes K	A	B	C	PD	Percent Injury	Annual M Ent-Veh	Crash Rate	Critical Rate	CRF
54694	0009X - 29.51	TL Biddeford Kennebunkport	1	0	0	0	0	0	0	0.0	0.400	0.00	0.60	0.00
												Statewide Crash Rate:	0.14	
54695	0009X - 29.60	Int of OAK RIDGE RD POOL ST	1	1	0	0	0	1	0	100.0	0.901	0.37	0.54	0.00
												Statewide Crash Rate:	0.14	
54880	0009X - 29.65	Int of POOL ST SCADLOCK MILL RD	1	0	0	0	0	0	0	0.0	0.891	0.00	0.54	0.00
												Statewide Crash Rate:	0.14	
54881	0009X - 30.02	Int of POOL ST SCADLOCK MILL RD	1	0	0	0	0	0	0	0.0	0.854	0.00	0.55	0.00
												Statewide Crash Rate:	0.14	
54696	0009X - 30.14	Int of POOL ST WEST ST	2	1	0	0	0	0	1	0.0	1.126	0.30	0.54	0.00
												Statewide Crash Rate:	0.15	
54697	0009X - 30.53	Int of GRANITE POINT RD POOL ST	1	2	0	0	1	0	1	50.0	1.043	0.64	0.53	1.22
												Statewide Crash Rate:	0.14	
54698	0009X - 30.61	Int of FORTUNES ROCKS RD POOL ST	1	0	0	0	0	0	0	0.0	0.948	0.00	0.54	0.00
												Statewide Crash Rate:	0.14	
54699	0009X - 30.83	Int of ELIZABETH RD POOL ST	1	0	0	0	0	0	0	0.0	0.679	0.00	0.57	0.00
												Statewide Crash Rate:	0.14	
58277	0009X - 31.50	Int of MADDOX POND RD POOL ST	1	1	0	0	1	0	0	100.0	0.703	0.47	0.57	0.00
												Statewide Crash Rate:	0.14	
54882	0009X - 31.85	Int of POOL ST WATER TOWER WY	1	0	0	0	0	0	0	0.0	0.701	0.00	0.57	0.00
												Statewide Crash Rate:	0.14	
59000	0009X - 31.91	Int of BRIDGE RD POOL ST	2	1	0	0	0	0	1	0.0	0.720	0.46	0.60	0.00
												Statewide Crash Rate:	0.15	
54701	0009X - 31.96	Int of BRIDGE RD POOL ST	2	1	0	0	0	0	1	0.0	1.250	0.27	0.53	0.00
												Statewide Crash Rate:	0.15	
54702	0009X - 33.18	Int of NEWTOWN RD POOL ST	2	1	0	0	0	0	1	0.0	1.218	0.27	0.54	0.00
												Statewide Crash Rate:	0.15	
54703	0009X - 33.35	Int of OLD POOL RD POOL ST	2	4	0	0	0	1	3	25.0	2.234	0.60	0.46	1.30
												Statewide Crash Rate:	0.15	
54704	0009X - 33.96	Int of POOL ST SOKOKIS RD	2	0	0	0	0	0	0	0.0	2.551	0.00	0.45	0.00
												Statewide Crash Rate:	0.15	
57515	0009X - 34.06	Non Int POOL ST	2	0	0	0	0	0	0	0.0	2.446	0.00	0.45	0.00
												Statewide Crash Rate:	0.15	
54705	0009X - 34.43	Int of MEETINGHOUSE RD POOL ST SOKOKIS RD	2	0	0	0	0	0	0	0.0	2.334	0.00	0.46	0.00
												Statewide Crash Rate:	0.15	
54517	0009X - 34.68	Int of NO NAME RD POOL ST	2	0	0	0	0	0	0	0.0	1.989	0.00	0.47	0.00
												Statewide Crash Rate:	0.15	
54706	0009X - 34.74	Int of MARBLEHEAD LN POOL ST	2	0	0	0	0	0	0	0.0	2.028	0.00	0.47	0.00
												Statewide Crash Rate:	0.15	
54707	0009X - 35.05	Int of MEETING HOUSE RD POOL ST	2	3	0	1	1	0	1	66.7	2.342	0.43	0.46	0.00
												Statewide Crash Rate:	0.15	
59238	0009X - 35.18	Int of HIDDEN FARM RD POOL ST	2	1	0	0	0	0	1	0.0	2.392	0.14	0.45	0.00
												Statewide Crash Rate:	0.15	
59237	0009X - 35.27	Int of HIDDEN FARM RD POOL ST	2	0	0	0	0	0	0	0.0	2.402	0.00	0.45	0.00
												Statewide Crash Rate:	0.15	

Crash Summary I

Nodes

Node	Route - MP	Node Description	U/R	Total Crashes	Injury Crashes K	A	B	C	PD	Percent Injury	Annual M Ent-Veh	Crash Rate	Critical Rate	CRF
54708	0009X - 35.61	Int of DECARY RD POOL ST	2	0	0	0	0	0	0	0.0	2.408	0.00	0.45	0.00
												Statewide Crash Rate:	0.15	
54709	0009X - 35.89	Int of DECARY RD POOL ST	2	2	0	0	0	0	2	0.0	2.482	0.27	0.45	0.00
												Statewide Crash Rate:	0.15	
58537	0009X - 35.94	Int of LEDGEMERE DR POOL ST	2	0	0	0	0	0	0	0.0	2.617	0.00	0.44	0.00
												Statewide Crash Rate:	0.15	
58538	0009X - 36.20	Int of LIBBY DR POOL ST	2	2	0	0	1	0	1	50.0	2.655	0.25	0.44	0.00
												Statewide Crash Rate:	0.15	
54710	0009X - 36.29	Int of MARIAL AV, POOL ST	2	0	0	0	0	0	0	0.0	2.850	0.00	0.43	0.00
												Statewide Crash Rate:	0.15	
54711	0009X - 36.58	Int of LAFAYETTE ST POOL ST	2	2	0	0	0	1	1	50.0	3.134	0.21	0.42	0.00
												Statewide Crash Rate:	0.15	
54712	0009X - 36.68	Int of POOL ST SIMARD AV	2	1	0	0	0	0	1	0.0	3.355	0.10	0.41	0.00
												Statewide Crash Rate:	0.15	
54713	0009X - 36.73	Int of CLIFFORD ST POOL ST	2	4	0	0	0	0	4	0.0	3.478	0.38	0.41	0.00
												Statewide Crash Rate:	0.15	
54714	0009X - 36.85	Int of GEORGE ST POOL ST	2	1	0	0	0	0	1	0.0	2.011	0.17	0.47	0.00
												Statewide Crash Rate:	0.15	
54715	0009X - 36.89	Int of PARENT AV POOL ST	2	0	0	0	0	0	0	0.0	1.772	0.00	0.49	0.00
												Statewide Crash Rate:	0.15	
54716	0009X - 36.93	Non-Int POOL ST	2	0	0	0	0	0	0	0.0	1.775	0.00	0.49	0.00
												Statewide Crash Rate:	0.15	
54717	0009X - 36.98	Int of BRISTOL ST POOL ST	2	0	0	0	0	0	0	0.0	1.796	0.00	0.49	0.00
												Statewide Crash Rate:	0.15	
54718	0009X - 37.04	Int of PIKE ST PIKE ST EXT POOL ST	2	5	0	0	0	3	2	60.0	1.859	0.90	0.48	1.86
												Statewide Crash Rate:	0.15	
58539	0009X - 37.07	Int of POOL ST SCHOOL ST	2	0	0	0	0	0	0	0.0	1.838	0.00	0.48	0.00
												Statewide Crash Rate:	0.15	
54719	0009X - 37.08	Int of HIGH ST POOL ST	2	1	0	0	0	0	1	0.0	2.005	0.17	0.47	0.00
												Statewide Crash Rate:	0.15	
54720	0009X - 37.11	Int of OAK ST POOL ST	2	2	0	0	0	1	1	50.0	2.219	0.30	0.46	0.00
												Statewide Crash Rate:	0.15	
54721	0009X - 37.15	Int of MIDDLE ST POOL ST	2	0	0	0	0	0	0	0.0	2.266	0.00	0.46	0.00
												Statewide Crash Rate:	0.15	
58540	0009X - 37.16	Int of PHILLIPS LN POOL ST	2	0	0	0	0	0	0	0.0	2.287	0.00	0.46	0.00
												Statewide Crash Rate:	0.15	
54722	0009X - 37.20	Int of HILL ST, POOL ST	9	12	0	0	0	4	8	33.3	4.745	0.84	1.33	0.63
												Statewide Crash Rate:	0.77	
54723	0009X - 37.28	Int of FOSS ST POOL ST	2	3	0	0	0	1	2	33.3	2.659	0.38	0.44	0.00
												Statewide Crash Rate:	0.15	
54740	0009X - 37.34	Int of ALFRED ST JEFFERSON ST POOL ST	9	17	0	0	0	8	9	47.1	5.419	1.05	1.30	0.80
												Statewide Crash Rate:	0.77	
53560	3110079 - 1.31	3103157 BID,HILLS BEACH RD,LONG AVE	2	0	0	0	0	0	0	0.0	0.447	0.00	0.64	0.00
												Statewide Crash Rate:	0.15	

Crash Summary I

Nodes

Node	Route - MP	Node Description	U/R	Total Crashes	Injury Crashes K	A	B	C	PD	Percent Injury	Annual M Ent-Veh	Crash Rate	Critical Rate	CRF
57374	3110079 - 1.36	Int of HILLS BEACH RD SEABREEZE AV	2	0	0	0	0	0	0	0.0	0.498	0.00	0.63	0.00
												Statewide Crash Rate:	0.15	
57372	3110079 - 1.38	Int of BREAKWATER AV HILLS BEACH RD	2	1	0	0	0	0	1	0.0	0.571	0.58	0.62	0.00
												Statewide Crash Rate:	0.15	
59220	3110079 - 1.48	Int of HILLS BEACH RD RED OAK LN	2	0	0	0	0	0	0	0.0	0.604	0.00	0.62	0.00
												Statewide Crash Rate:	0.15	
57039	3110079 - 1.55	Non Int HILLS BEACH RD	2	0	0	0	0	0	0	0.0	0.300	0.00	0.65	0.00
												Statewide Crash Rate:	0.15	
53380	3101398 - 1.36	Int of HILLS BEACH RD OLD POOL RD	2	0	0	0	0	0	0	0.0	0.798	0.00	0.59	0.00
												Statewide Crash Rate:	0.15	
59177	3101398 - 0.60	Int of DAYS LNDG, OLD POOL RD	1	0	0	0	0	0	0	0.0	0.177	0.00	0.52	0.00
												Statewide Crash Rate:	0.14	
63672	3101398 - 1.05	Int of MARSH VIEW DR OLD POOL RD	2	0	0	0	0	0	0	0.0	0.194	0.00	0.60	0.00
												Statewide Crash Rate:	0.15	
Study Years:	3.00	**NODE TOTALS:**		69	0	1	4	20	44	36.2	91.371	0.25	0.29	0.87

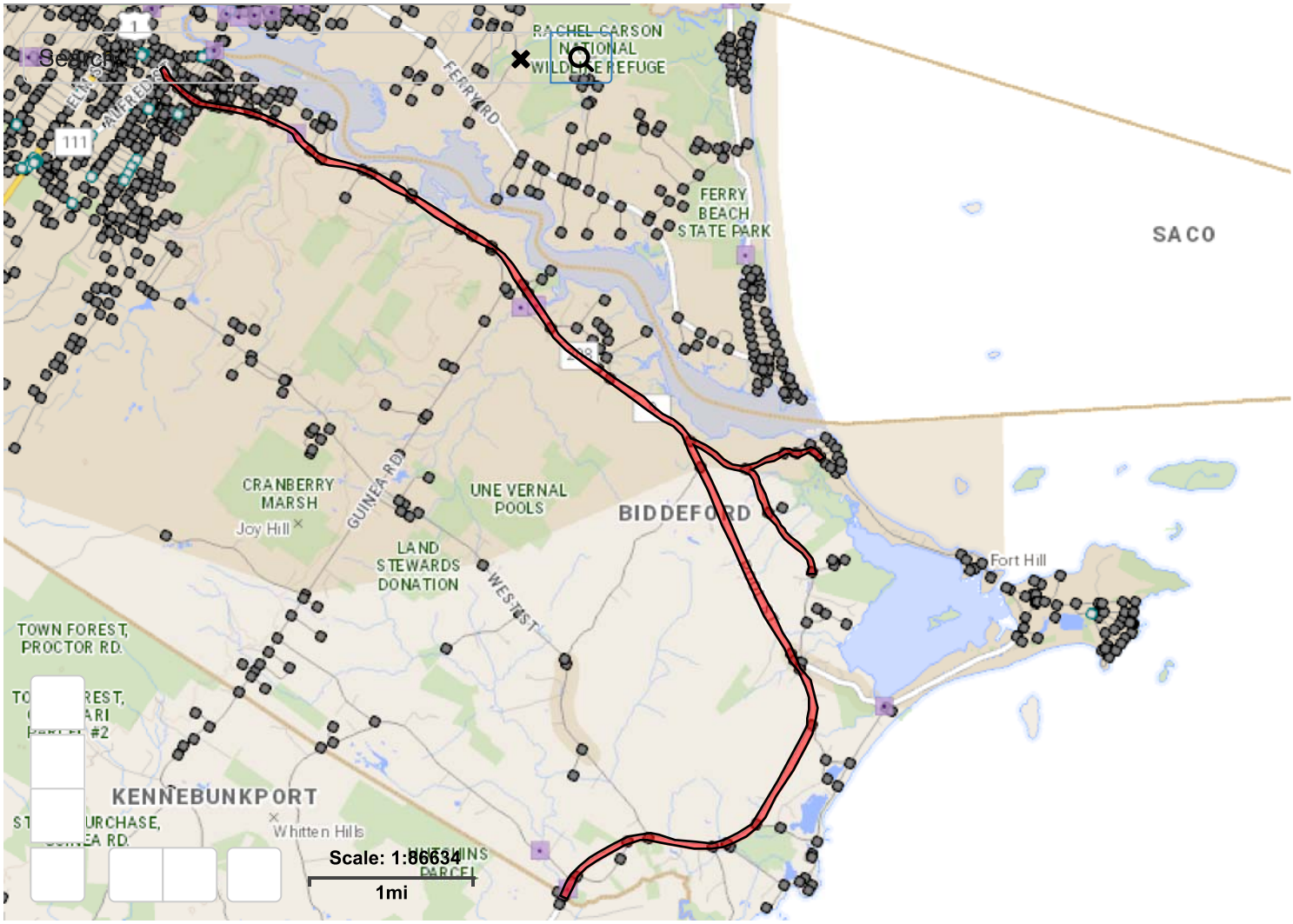
Search
RACHEL CARSON NATIONAL WILDLIFE REFUGE
FERRY RD
FERRY BEACH STATE PARK
SACO
CRANBERRY MARSH
Joy Hill
GUINEA RD
UNE VERNAL POOLS
BIDDEFORD
LAND STEWARDS DONATION
WEST ST
Fort Hill
TOWN FOREST, PROCTOR RD.
KENNEBUNKPORT
Whitten Hills
Scale: 1:86634
1mi

University of New England

Parking and Transportation Demand Management - 2022

The previous Master Plan parking demands were based upon data in a publication entitled *Parking for Institutions and Special Events*[1]**.** This specific source is cited in many later studies and appears to be in current use in evaluating university/college parking needs. The study itself does not cite a specific parking supply standard, but reports on the standards used at a number of institutions throughout the country. The most conservative rate cited is one space for each full time faculty and staff member and 0.5 spaces per enrolled student. For the previously approved master plan, these calculations include non-UNE employees who regularly report to work on campus (Dining Services and Bookstore contract employees). Based on that formula, the projected 2022 parking demand was 1952 spaces. A total of 2029 parking spaces are available on the campus. Annually in October and April, UNE conducts actual vacant parking space counts to confirm these calculations. Utilization of the October 2022 data indicates that during average peak demand, typically between 12:00 noon and 1:00PM, there were 167 spaces available on campus, thus confirming the relative accuracy and conservativeness of the formula.

UNE has an ongoing Transportation Demand Management plan (TDM) since 2010, to address the parking issues on campus, as well as reducing vehicular traffic on campus and in the vicinity of the campus. Specifically, the actions include:

- Residential Student parking permit fee of $300.
- $300 incentives to freshman to leave cars at home.
- Free on campus shuttle service.
- Subsidizing the shuttle bus service to downtown Biddeford, including all local routes as well as the ZOOM to Portland. The use of which is free to all UNE Community members.
- Providing free utilization of the South Portland Bus Service and the Portland Metro Bus system, including the Metro Breeze to Brunswick. The use of which is free to all UNE Community members.
- Providing free bicycles, helmets and locks for travel on and around campus.
- Car Pool Program that allows for free parking on campus.
- UNE utilizes the GoMaine service to encourage “greener commuting” to each campus as

[1] Edward M. Whitlock, P.E., Eno Foundation for Transportation, Westport, CT, 1982

well as between campuses when required. UNE has its own landing page on the GoMaine website, which helps users find carpool partners, map out alternative transportation methods with transit, walking and biking routes, incentivizes users with rewards, and offers emergency "ride home guarantee" for regular users. Additionally, UNE takes advantage of the expertise of GoMaine staff for educational and promotional events with informational tabling, swag give-aways, and educational presentations.

- During the last Way-2-Go, GoMaine competition in 2019, UNE won two awards: Most New Members in the XXL Company Category and the Team Spirit Awards. There was significant momentum developing in the alternative transportation realm and the university is eager to return to this pre-pandemic activity and progress. The TTT committee plans to participate in and support future Way-2-Go competitions.
- In addition to this, UNE has an extensive videoconferencing system to minimize the commuting needs of faculty and staff as a result of intercampus meetings.

The University's TDM program has had a significant impact on parking demand. The Freshman incentives are highly utilized and reduce on campus vehicles by approximately 250 each year.

In the previous academic year only 2796 passengers used the Biddeford shuttle bus. Students, faculty and staff ride free on both the shuttle and the Zoom system, as well as the South Portland and Portland bus systems. This is down considerably from the previously reported ridership rates, due primarily to COVID. UNE is working towards re-establishing a greater use of mass transit. The use of mass transportation has been proven to significantly reduce the traffic volumes on the local road system, minimizes the need to bring a vehicle to campus, and decreases the University's carbon footprint.

For Freshman students not requesting a parking permit, LYFT vouchers are available as incentives. Eligible students receive, at no cost, an annual credit against these rentals that can be used while on campus or at home. Additionally, for Freshman students not requesting a parking permit, they can also choose to receive a $300 credit at the UNE bookstore or at the UNE retail food service venues.

The University also has a Car Pool Program to encourage persons to ride share. This program allows for free parking on campus to faculty and staff, and requires a minimum of two persons commuting together to be eligible. Car Pool parking is designated and centrally located on campus.

As previously indicated, the existing supply of parking on the Biddeford Campus is 2029 spaces. Based upon projected student, faculty, and UNE and contracted staff statistics in the Master Plan (2023- 2027), parking demand is summarized below:

Year	2022	2023	2024	2025	2026	2027
Students	2402	2505	2165	2190	2235	2290
Faculty/Staff	751	726	600	620	640	650
Student Parking Demand	1201	1253	1083	1095	1118	1145
Faculty/Staff Parking Demand	751	726	600	620	640	650
Total Parking Demand	1952	1979	1683	1715	1758	1795
Projected Surplus/Deficit*	77	50	346	314	271	234
Actual Surplus+	167					

* Based upon existing supply of 2029 spaces

+ Based on actual vacant space counts, October 2022

Potential additional parking on campus is envisioned in the 2023 - 2027 Master Plan at locations on the west side of Route 9 near the Harold Alfond Forum and some new parking may be provided on the main campus near the Pickus Biomedical Center addition.

The University is now participating in intercollegiate football. These games are held during non-peak academic periods, thus parking that would typically be used by commuter students or faculty and staff is available for use during these events. This is similar to other large sporting events and programs. The University staffs all home games and major events on campus with Safety and Security Officers to assist with crowd control and pedestrian safety. For events that are determined to have a potentially significant impact on the community, notices are sent out to neighbors in advance to alert them and to solicit feedback prior to the event occurring. For example, the University had to host its Commencement on campus in 2014 as a result of the construction at the Cumberland County Civic Center. This resulted in a large number of vehicles coming to and from the campus during a limited amount of time. This event was coordinated with the local public safety officials and the community was notified well in advance, in order to minimize the impact of this event.

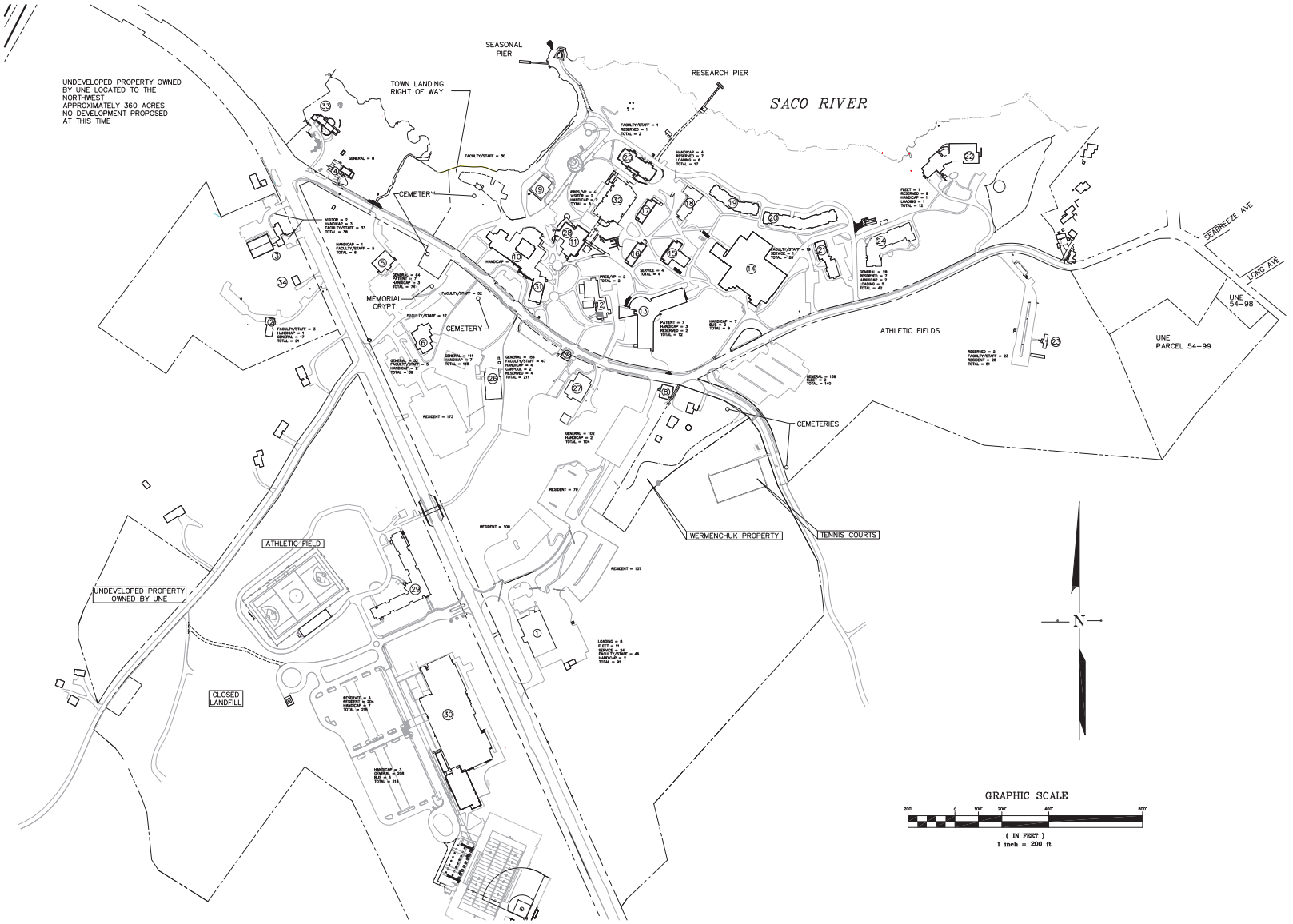

BUILDING KEY

FACILITIES MGT.	1
CREATIVE AND FINE ARTS	2
BUSINESS OFFICE	3
WELCOME COTTAGE	4
PETTS CENTER	5
MARCIL HALL	6
GREGORY HALL	7
LEARNING ASSISTANCE CENTER	8
WW TREATMENT PLANT	9
DECARY HALL	10
KETCHUM LIBRARY	11
STELLA MARIS	12
HAROLD ALFOND CENTER FOR THE HEALTH SCIENCES	13
CAMPUS CENTER	14
ASSISSI HALL	15
SIENA HALL	16
PADUA HALL	17
AVILA HALL	18
WEST RESIDENCE HALL	19
EAST RESIDENCE HALL	20
FREDERICK HALL	21
MARINE SCIENCE AND RESEARCH CENTER	22
HOUSING PARK	23
CHAMPLAIN HALL	24
FEATHERMAN HALL	25
MORGANE HALL	26
PICKUS BIOMEDICAL CENTER	27
BUSH CENTER	28
SOKOKIS HALL	29
HAROLD ALFOND FORUM	30
LEONARD HALL	31
DANIELLE N. RIPICH COMMONS	32
1 HILLS BEACH ROAD	33
590 POOL STREET	34

THIS PLAN SHALL NOT BE MODIFIED WITHOUT WRITTEN PERMISSION FROM SITE DESIGN ASSOCIATES, ANY ALTERATIONS, OTHERWISE, SHALL BE AT THE USER'S SOLE RISK AND WITHOUT LIABILITY TO SITE DESIGN ASSOCIATES.

REV.	DATE	STATUS	BY	CHKD.	APPD.
B	2/08/23	FOR SUBMISSION	DEPT	DEPT	TWS
A	1/20/23	FOR CITY OF BIDDEFORD REVIEW	DEPT	DEPT	TWS

Site Design Associates
Consulting Engineering & Land Planning
23 Whitney Way Topsham, Maine 04086 Tel: (207) 449-4275

CLIENT:
UNIVERSITY OF NEW ENGLAND
11 HILLS BEACH ROAD BIDDEFORD, MAINE 04005

DESIGN: TWS
DRAWN: DEPT.
CHKD: TWS
DATE: JANUARY 2023
SCALE: 1"=200 FT±

PROJECT:
UNE CAMPUS MASTER PLAN
11 HILLS BEACH ROAD BIDDEFORD, MAINE 04005

EXISTING PARKING PLAN

PROJ. NO. –
REV. B
DWG. NO. P-100

6 – Water and Sewer Service

a. A description of current provisions for water supply and sewage disposal including capacities, current utilization rates, and conformance with any permit or other legal standards.

b. An analysis of the change in demand for water supply and sewage disposal resulting from anticipated changes in programs and facilities over the next five years and the adequacy of the existing systems to meet this demand.

c. A proposed program of improvements to address any identified deficiencies

Water Service

Water service is generally available to the main campus area from the existing 8" main in Hills Beach Road owned by Maine Water. The 8" main branches at the intersection of the Hills Beach and Old Pool Roads and continues along both roads. The main along Hills Beach Road ends at a hydrant at the end of Hills Beach Road. The 8" main in Old Pool Road continues to a tie in with the Kennebunk Water District to provide a looped system. This connection was made in 1998, and water company personnel have indicated that this has improved the flow characteristics in the system. If a significant reduction in water pressure is experienced in the water system serving the campus and Hills Beach Community for any reason, a valve at the intersection of Old Pool and Bridge Roads can be opened, which will increase the pressure and flows in the system.

Two of the smaller residential style facilities have private wells. These include 590 Pool Street and the Creative and Fine Arts Building.

Please refer to the *Campus Plan-Five Year Development Strategy* plan in the back of section 10, for the locations of potential projects to be developed.

Water service to the proposed development will be provided from the existing distribution systems.

The *Campus Plan-Five Year Development Strategy* plan has been provided to the Maine Water for the proposed development. As noted in the attached letter from Maine Water, they have indicated they have the capacity to serve the future needs of UNE.

Sewerage Treatment Plant

The University currently operates a wastewater treatment plant licensed to discharge 150,000 gallons per day (gpd) to the Saco River. During 2022 the discharge rates averaged 59,096 gallons per day and the peak monthly average for 2022 was 86,679 gpd in February, with lower rates during other months. All University owned buildings on campus discharge wastewater to the campus system, excepting the Welcome Cottage, 590 Pool Street, the Creative and Fine Arts Building, 1 unit at the former housing park,

the president's residence at 1 Hills Beach Road, and the Business Office, which all have subsurface wastewater disposal systems.

The wastewater treatment plant is functioning properly and no problem areas are evident. The University has had only two violations of its effluent quality in the last 20 years.

The wastewater collection system is completely separated from the campus storm water collection systems, and the manholes sealed, thus there is no possibility of any overflows at the treatment plant due to storm water.

The total maximum projected daily discharge based upon 300 additional beds and all proposed projects is estimated to be 101,100 gpd. Based on the analysis of the current flow data at the treatment plant and the projected flows, it does not appear that expansion of the treatment facility to accommodate additional flow will be required at build out, and the plant will operate within its licensed capacity. This does not preclude expansions dictated by changes in local, state or federal regulations pertaining to treatment plant discharges.

d. A statement as to how water supply and sewer disposal improvements are or will be coordinated with City programs and the needs of neighboring residential areas.

Any water service improvements necessary will benefit the surrounding community through the increased capacity and added reliability of upgraded infrastructure.

The Maine Water Company
93 Industrial Park Road
Saco, ME 04072

T: 207.282.1543
F: 207.282.1544
www.mainewater.com

December 27, 2022

Site Design Associates
Attn: Thomas Saucier, PE
23 Whitney Way
Topsham, ME 04086

Re: University of New England Capital Plan Update

Dear Tom:

Thank you for forwarding the updated 2022 Capital Plan for the University of New England Biddeford Campus. It remains important for our Engineering and Service Delivery staff to become familiar with the recent construction and growth plans on campus and continue a relationship such that our goals remain aligned.

Based on the revised capital plan, we are comfortable that the water system has capacity for the projected growth and uses you have indicated. We also understand that we will have to opportunity to review individual projects in conjunction with the City of Biddeford and other applicable utilities and agencies.

We look forward to our continued relationship with you and the University and please do not hesitate to reach out to discuss specific projects

Sincerely,

Jon Earle

Jon Earle, PE
Manager of Engineering Technical Services

7- Municipal and Community Services

a. A description of all municipal and community services (police, fire, recreation, etc.) currently utilized by the institution and data on the current level of usage.

Emergency Services
The University employs Safety and Security Officers, who provide 24-hour coverage on a year-round basis. These officers are trained as first responders. The University also supports a student led Emergency Medical Services, EMS, team of 83 volunteers providing emergency medical coverage 7pm to 7am seven days a week when classes are in session. Twenty-five of these volunteers are licensed EMT's. The University has its own Student Health Center on campus as well as a full array of counselling services available to our students.

In addition, the University of New England receives Police, Fire, and Emergency Medical Services (EMS) from the City of Biddeford. The University's Fire Alarm systems are monitored by UNE Safety & Security Dispatch and reported to the Biddeford Fire Department. These following statistics were prepared utilizing records provided to the University by JoAnne Fisk, Deputy Chief, Biddeford Police Department, and the City's published annual reports.

The total calls for service from the University for the calendar year 2021 were two hundred and thirty-six (236), or 0.17 calls per resident student. Fire/EMS calls make up 98 of the total calls, and Police dispatch calls represent the other 138 calls. This is a decrease of 10 calls of service, or -4% from the previous submitted 2016- 2021 Master Plan, which had estimated an increase of 20 calls per year for the facilities that were actually constructed. **If** UNE realized a **full build out** of the 2023-2027 Master Plan, it is anticipated that an additional 54 calls for service may be generated per year.

Comparatively, the total number of calls for emergency service to the City of Biddeford's Communication Center, in 2021, was 51,374 or the equivalent of 2.28 calls per resident of Biddeford. In 2014 the total number of calls for emergency service to the the City of Biddeford's Communication Center was 48,103, or 2.25 calls per resident. This represents an increase of 6.8% from 2014 to 2021. In 2021, the calls to the University represented 0.46% of all calls for service.

While the University's calls for service was relatively insignificant in comparison to the overall call load, it is important to note that the small number of calls does not diminish, the critical role and the outstanding performance of duty by the Biddeford Police and Fire Departments. Their quick response, excellent level and quality of care, and the professional manner in which difficult situations were addressed and resolved were greatly appreciated by the University faculty, staff, and students.

The University occasionally contracts with the Biddeford Fire and Police departments to provide coverage at home football games or other significant events held on campus. The

University allows the Biddeford Fire Department to conduct training in the unoccupied Residence halls during the summer months.

In the event of a Fire Alarm being activated, the City Fire Department is notified by UNE Safety & Security Dispatch, and a response is initiated. If the University is aware that the alarm is a “false alarm”, the City is notified of such and only one vehicle responds to reset the system. All other vehicles return to the station, minimizing the impact of the “false alarm”.

It is important to note that the information received from the City may vary from similar data elements found in the University’s Compliance Document for Crime Awareness and Campus Security Act of 1990, which statistics track University student code violations as well as crimes.

Please see the *Estimates of Impact* document at the rear of this section.

Solid Waste
The University contracts for its waste disposal services. There is no impact to the City services.

The University actively recycles all of its waste streams, including cardboard, paper and returnable bottles and cans, in all of its facilities. Approximately 40% of all waste is recycled.

All electronics are re-furbished and/or recycled. All Universal Waste is managed and disposed in accordance with State and Federal Regulations.

All hazardous materials are inventoried upon arrival, and stored and managed in accordance with State and Federal Regulations. Any unused chemicals are offered to other users, or if deemed waste, then they are disposed of through licensed venders and manifested per regulations.

UNE started "SWOOP Days" in 2007 which is a collection drive during "move-out" week. The program has evolved to include a thrift shop event on campus in August to resell and gift gently used and curated items to students. Remaining items are brought to Goodwill for donation. The Sustainability Office, Residential Life and student environmental club collaborate to collect gently used clothes, furniture, small appliances, decorations and household accessories and store them over the summer for reuse in the fall, significantly reducing the waste generated from move-out. Unopened non-perishable food items are also collected, and donated to local food pantries.

Lightly used furniture is donated annually to homeless shelters and other organizations supporting those in need.

Recreation
The University has used the City of Biddeford's Saint Louis Field for its Club Baseball practices, scrimmages and games for the last ten years or so, and intends to continue utilizing the field. The games take place during September and October.

The University's Cross Country teams have and will continue to utilize Rotary Park for its home meets (one or two a year) and some practices. Additionally, the women's outdoor track & field team regularly practices during the months of March and April at the Biddeford High School track.

b. An analysis of the change in demand for municipal and community services and the adequacy of the existing services to meet this demand.

Based on current data, **IF** UNE realized **a full build out** of the proposed Master Plan, it is anticipated that an additional 54 calls of service would be generated per year. Assuming no other increases in Biddeford emergency service calls, these additional calls would increase the total calls for emergency services by 0.11%. It would be logical to assume that this increase would have a relatively insignificant impact on the adequacy of the existing emergency services.

In an effort to further minimize the impact of the increased level of calls for service to these entities, the University will continue to expand its education of its community on fire awareness, safety and health issues, offer additional health and wellness programs, and to continue to provide on-site health and counseling services to its community. The University maintains and inspects its safety systems on a regular basis to ensure that they are operating correctly, and imposes sanctions to the residents for any tampering of these systems, minimizing the potential for false alarms.

c. A proposed program of improvements to meet the identified deficiencies including proposed funding mechanisms.

The University has not identified any deficiencies in City or Community Services. However, UNE continues to work with the city to explore options for a remote Biddeford Fire substation in the coastal region of the city, proximal to the UNE campus.

University of New England - Biddeford Campus

Campus Master Plan - Five Year Projections *(2021- 2026)*

Estimates of Impact

1/2/2023

HOUSING			
Description	**Water Demand (Peak Gallons per Minute)**	**Waste Water (Gallons per day)**	**Parking Demand (Spaces)**	**Police/Fire/EMS Service (Calls per year)**
H1 New Residence Hall	33	6,000	150	26

ACADEMICS				
Description	**Water Demand (Peak Gallons per Minute)**	**Waste Water (Gallons per day)**	**Parking Demand (Spaces)**	**Fire/EMS Service (Calls per year)**
A1 Morgane Hall Addition	10	400	4	3
A2 Marine Science Patio Enclosure	5	100	0	0
A3 Marine Science Addition	10	800	5	2
A4 Creative and Fine Arts Addition	NA	NA	0	1
A5 Marcil Hall Addition	10	400	4	2

SUPPORT				
Description	**Water Demand (Peak Gallons per Minute)**	**Waste Water (Gallons per day)**	**Parking Demand (Spaces)**	**Fire/EMS Service (Calls per year)**
S1 Storage Facility	NA	NA	0	0
S2 Campus Center	10	300	2	5
S3 Waterfront Access for Recreation	NA	NA	0	1
S4 Waterfront Access for Research	NA	NA	1 (ADA)	1
S5 Storage Facility	NA	NA	0	0
S6 Petts Center Addition	5	200	6	7
S7 Pickus Center Addition	10	300	0	1
S8 Wastewater Treatment Facility Addition	NA	NA	0	0

ATHLETICS				
Description	**Water Demand (Peak Gallons per Minute)**	**Waste Water (Gallons per day)**	**Parking Demand (Spaces)**	**Fire/EMS Service (Calls per year)**
F1 Athletic Track/Field	NA	NA	2 (ADA)	2
F2 Athletic Storage	NA	NA	0	0
F3 Tennis Courts/Pressbox/Storage	NA	NA	1 (ADA)	1
F4 Athletic Field	NA	NA	2 (ADA)	2
F5 Athletic Storage	NA	NA	0	0

8- Neighborhood Impact

a. An assessment of how current campus activities impact neighboring residential areas including, but not limited to, traffic, noise, and visual intrusions. This assessment shall consider conformity to current City and state standards with respect to these items as well as documented evidence of any community or neighborhood concerns relative to these issues.

b. An evaluation of current efforts to mitigate these impacts.

Traffic

Consistent with the requirements of the Institutional Zone Master Plan and during Site Plan review processes, the University has had traffic engineering consultants conduct studies to assess the traffic situation around the campus and identify any problems, their causes, and potential mitigation opportunities (See detailed traffic report in Section 5 Parking and Traffic).

Hills Beach Road is the primary road that runs through the heart of the campus core. It is the primary access road for the Hills Beach residents to use while traveling to and from their homes and surrounding community. Both the University community and Hills Beach community also access the campus from Old Pool Road.

In response to concerns raised by the residents of the Hills Beach community in 2005, the University initiated a policy, that states "*No University of New England employee, office or department, student or student group shall sponsor or schedule any event, be it University related or one contracted by UNE with an outside group or organization, that would allow participants of that event to walk or run down Hills Beach Road*", into the Hills Beach Community. This policy has been successfully adhered to and is still in place.

During the period of time that the Institutional Zone was being created, the City, the University, and the abutting neighborhood of Hills Beach held numerous discussions about the need for a by-pass road to eliminate the need for through traffic within the campus. A survey conducted by a Mayor's Ad Hoc Commission, circa 2001, indicated that at that time, the majority of residents in the Hills Beach area did not support construction of a by-pass road. The Traffic Study located in Section 5 also concludes that the University's growth plans for the next five years do not warrant construction of a bypass road. However, the City may determine that it wishes to pursue construction of a bypass road or other traffic improvements, for economic development and anticipated residential growth of the neighborhood. UNE's conclusion that a bypass road is not required by the University's five-year growth plan is a separate issue from any City determination that a bypass road is desired to address other neighborhood needs.

With the development that has occurred on the westerly side of Route 9, there was the need to install pedestrian safety improvements on Route 9. The plan was fully

implemented and has resulted in a much safer environment for pedestrians and vehicles. A request was received in the Fall of 2015 to trim overhanging branches that were obstructing the pedestrian crossing lights. This work was completely shortly after the call was received. Several reports of pedestrians crossing Route 9 without activating the pedestrian crossing lights have been received. In response to this concern, the University's Safety and Security Department focus on this topic, and general pedestrian/vehicular safety, during their mandatory annual training sessions conducted with all resident students at the beginning of each year.

The University was issued a Traffic Movement Permit, TMP, from the Maine Department of Transportation in 2009. This was based on its development and projected student growth to 2623 students on its Biddeford Campus. This projection was never realized and the newest projection for 2027 is set at 2290 students. The existing TMP, and the improvements made as a result of that permit, more than adequately addresses the projected growth contained within this Master Plan update.

It is the University's plan to gradually transform the Biddeford campus into a "walking campus" that is safe for both pedestrians and motorists. The University intends to continue the dialogue with its most immediate neighbors, as well as with Biddeford City officials and other stakeholders in the community to discuss any ongoing vehicular/pedestrian safety issues that might arise.

The University staffs all home games and major events on campus with Safety and Security Officers to assist with crowd control and pedestrian safety. For events that are determined to have a potentially significant impact on the community, notices are sent out to neighbors in advance to alert them and to solicit feedback prior to the event occurring. For example, the University had to host its Commencement on campus in 2014 as a result of the ongoing construction at the Cumberland County Civic Center. This resulted in a large number of vehicles coming to and from the campus during a limited amount of time, and was coordinated with the local public safety officials and the community was notified well in advance, in order to minimize the impact of this event.

Concerns recently discussed at the University's Institutional Zone – Master Plan Submission Community Workshop, held on November 2, 2015, included pedestrian crossings at Decary Hall and lighting levels at the crosswalks along Hills Beach Road. The University has included the pedestrian crossing at Decary Hall on it Conceptual Development Plan, but will need to work with the City and local community to identify an acceptable plan that would address this concern. The lighting issue with be evaluated and solutions implemented as the University continues with its landscaping enhancement program.

Noise

During the development on the westerly side of Route 9, the University received several calls related to noise. These were a result of contractors staring work earlier than 7am or later into the evening. The calls were evaluated and addressed on a case by case basis.

The university attempts to provide notice to its neighbors when it anticipates louder than normal activities, such as the bi-annual cleaning of the seawater tank at the Marine Science Center and when construction activities, including increased vehicular traffic, may occur near their property.

To mitigate concerns about noise from construction activities, the University will continue to follow the model used during the construction of the last several projects, which includes making the contractors aware of the City noise ordinance and related times, and require that they notify the City Code Enforcement Office of any work activities before 7:00a.m and after 10:00p.m. The University has also maintained its waste pick up schedule to limit trash hauling before 7:00a.m. The University feels that these efforts will further reduce any real or perceived impacts from noise generated by on campus activities.

Visual Intrusions

The University believes its current campus does not cause any visual intrusions on the adjacent neighborhood. The University will continue to incorporate appropriate landscape design elements in all future projects. (See *Appendix A - Landscape Design Standards*)

Air Emissions

The University is signatory of the American College & University Presidents Climate Commitment (ACUPCC). Signing the ACUPCC is an affirmation of UNE's sustainability efforts already under way. The University has been working to reduce its air emissions though the use of cleaner burning fuels. For the past decade the University has been utilizing liquid propane in its central heating plant and has begun to utilize Bio-fuel in its other heating plants. The use of Bio-fuel and propane has resulted in a significant reduction of carbon dioxide emissions. The University conducts an annual, university-wide greenhouse gas inventory and reports this metric to its Board of Trustees on an annual basis since 2010. For each of these years, the University has been successful in reducing it Metric Tons of Carbon Dioxide Equivalent, MTCDE, from its emissions, even while increasing its population and/or square footage of buildings.

The University has had no violations of its Air Emissions license in the past ten years. In 2008 the DEP conducted a site inspection of the University Campus and found no issues with the University's heating plants or recordkeeping.

c. An assessment of any changes in these impacts resulting from the changes in programs or facilities included in the Master Plan.

In each and every instance where the University has identified either a realistic or perceived impact, the University will be proactive in its approach to communicate and collaborate with its neighbors and City officials. Early problem identification and frank

and open communication are cornerstones of the foundation that must be built in order to effectively and successfully build bridges of understanding and cooperation between the University, its immediate neighbors, and the City. Only then, the University believes, can the elusive common ground be sought and found together for the benefit of all parties involved.

d. A program for mitigating the adverse impacts of proposed changes or improvements on surrounding residential neighborhoods.

The detailed design process for any new structure on campus, which is a normal part of project development, will include assessments of traffic, landscaping, lighting, noise and foot traffic, and the University will be obliged to conform to the then-controlling federal, state, regional and local requirements for land use development site plan review. The design process for each project must, by law, address the requirements of these laws to assure that the levels of traffic, landscaping, lighting, and noise do not exceed lawful levels. But the precise standards may vary through time, and the University must address the specific requirements through the Site Plan review procedure, along with any required mitigation efforts.

In an effort to minimize the vehicles parking and traveling to and on campus the University has successfully implemented several programs. These Traffic Demand Management strategies and their effectiveness are outlined in detail in Section 6.

9- Community Outreach

a. Description of current community outreach activities.

The University of New England believes itself to be a good neighbor and active participant in the community. We have strong relationships and partnerships with many community and neighborhood organizations, as well as civic and local government entities. The following is just a brief sampling of the outreach the UNE conducts. Additional information can be found on the University's website. http://www.une.edu/

University representatives meet regularly with leaders from the Hills Beach Association to share information and identify, discuss and address any challenges. In addition, an annual Friends and Neighbors reception is held on campus every summer to gather and share information with our neighbors in the coastal area.

As the University of New England continues to broaden its profile in the region and beyond, ongoing engagement with citizens in the communities where we live and work is increasingly important.

Lecture Series and Public Events

President's Forum Lecture Series

The President's Forum is an event series consisting of moderated panel discussions, debates, or other highly interactive presentations on controversial issues. Underscoring the academy's unique role as the ultimate marketplace of ideas, the forum allows for open and robust discourse on timely topics, presenting diverse perspectives in a fair and balanced manner. The goal is not to privilege any particular ideology but, rather, to promote habits of mind and argumentation that enlighten students and the public and that promote a deeper understanding of critical issues facing our society.

George and Barbara Bush Distinguished Lecture Series

The George and Barbara Bush Distinguished Lecture Series is an annual event honoring the legacy of President and Mrs. Bush as pollical and community leaders.

The Center for Global Humanities Lecture Series

The Center for Global Humanities hosts speakers and films from around the globe and across the spectrum of the humanities.

For additional event and lecture opportunities please see the UNE website. http://www.une.edu/

Public Service and Volunteerism

Numerous members of the university hold volunteer leadership positions with local civic organizations.

The university continues to value its long-standing relationships with community groups by providing meeting space for events such as meetings of the Biddeford City Council, the Biddeford/Saco Chamber of Commerce, the City of Biddeford's Volunteer Recognition Dinner, as well as for the local Rotary clubs.

Within the City of Biddeford and throughout the state, University faculty, staff, and students provide thousands of hours of community service, both as volunteers and as part of their clinical training and grant-funded projects. It is estimated that UNE students volunteer about 10,000 hours to more than 150 Maine organizations each year. Here are *just a few* of the *hundreds of ways* that UNE reaches out into the community:

The University of New England supports the **Maine Area Health Education Center** (AHEC) Network's mission to alleviate health workforce shortages in rural and underserved areas of the state. AHEC supports that effort by working with academic and community partners to:

- **Provide** rural, community-based clinical training experiences for medical and other health professions students
- **Encourage** Maine youth and mid-career professionals to explore health careers
- **Support** practicing health professionals with continuing education and distance learning opportunities

Citizenship is a permanent part of the core curriculum at the University. Through the College of Arts and Sciences Citizenship Learning class, students provide more than 4,000 hours of community service each year at 16 sites in six communities. This outreach is largely focused in one-on-one mentoring projects at area schools. A Citizenship Service Learning Coordinator oversees these service experiences and strengthens the University's ties with the local community.

UNE's freshman orientation **Trailblazer program** engages new students to volunteer at soup kitchens, paint and maintain area homes for the elderly, enhance the YMCA camp facilities, and assist with special needs adults. Our Athletic program organizes fundraisers and holds clinics for area students. The faculty and students of the Department of Environmental Studies volunteer to teach in local schools, operate in planning offices, perform environmental clean-ups, manage preserved lands, and design environmentally sensitive projects.

UNE's College Community Mentoring Program (CCMP) is a volunteer mentoring program that seeks to engage UNE students in the community by serving as consistent, reliable adult role models for local children and teens.

Mentors build a structured and trusting relationship with their mentees by offering guidance, support, encouragement and academic assistance. Through the CCMP mentoring relationship, UNE mentors help young people develop into confident, competent and contributing members of society. In turn, student-mentors strengthen their dedication to the community and thoughtfully enhance their college experience.

Through the CCMP, the University of New England partners with the following schools and organizations: Biddeford Head Start, Biddeford Primary School, Biddeford Middle School, Kennebunkport Consolidated School, Sea Road School of Kennebunk, the Middle School of the Kennebunks, Jameson School of Old Orchard Beach and the Northern York County YMCA.

UNE students participate in numerous academic and research initiatives, many of which have significant local impact. While the research being conducted at the university is too expansive to detail in this document, from the study of the endangered short nose sturgeon, to the study of opioids on pain, and everything in between…UNE is committed to making the community in which we live better. See the attached link for an in-depth sampling of the research at UNE.
http://www.une.edu/research

UNE is proud to sponsor **Educate Maine** and work together to fulfill our common goal of increasing the number of Mainers earning post-secondary degrees and credentials that will serve them as members of a talented, globally competitive workforce. Educate Maine and UNE share the beliefs that education is the catalyst and foundation for individual success, engaged citizenship and sustainable economic growth and that all learners, traditional and adult, should have equal access to high quality educational opportunities and the resources to make a successful transition to post-secondary education. By working together with Educate Maine's network of educators, industry leaders and workforce development organizations, UNE gains further insight into the needs of Maine learners and employers.

The University of New England is addressing the region's need for **health informatics specialists** through a pilot initiative to create new models of education with funding from the Bill and Melinda Gates Foundation.

Health care is changing dramatically with physicians, hospitals and patients expecting decisions to be made on data, evidence and best practices. The challenge is turning the huge number of data points into meaningful information that can be used for improved outcomes. Health informatics professionals review the data sets to find trends and communicate results to guide those making decisions that affect the health of the people in our communities.

The University of New England (UNE) and **Biddeford High School** signed an agreement between the two institutions that will enable high performing Biddeford High students who matriculate at UNE to earn college transfer credits, potentially enabling the students to earn a bachelor's degree in just three years.

The agreement will give Biddeford high graduates the opportunity to receive course credit at UNE if accepted to the university, provided that their scores on Advanced Placement (AP) exams meet specific cut-offs. If students are able to transfer a minimum of 30 credits, they may enroll at UNE with sophomore standing.

The University of New England became is a local performance site of the **New England Public Health Training Center (NEPHTC)** with funding from Health Resources and Services Administration (HRSA). The NEPHTC is administratively housed at Boston University School of Public Health (BUSPH), and encompasses all six states in the region. In addition to UNE, other local performance sites include BUSPH, Dartmouth College, University of Massachusetts Amherst and Yale School of Public Health. The NEPHTC is one of 10 regional centers and one national coordinating center selected and funded by HRSA to address training needs of state and local public state practitioners nationwide. The goal of the NEPHTC is to strengthen the technical, scientific, managerial and leadership competencies of the current and future public health workforce in New England to ensure regional capacity to deliver high quality essential public health services

From sponsoring blood drives to student mentoring in area elementary schools to volunteering their talents on town committees, UNE faculty, staff and students volunteer thousands of hours of their time in important projects benefiting the southern Maine communities in which they serve and live. Additional examples of ways this is accomplished include the following:

- **Community Engagement**
    - The annual Brain Fair engages with local community in a science fair exploration of the brain
    - UNE faculty, professional staff and students involving 5-10 volunteers visit k-12 schools in the Biddeford system to run interactive lesson/modules about neuroscience including brain anatomy, function, and injury.
    - Southern Maine Brain Bee an international campaign organized by the Society of Neuroscience host the regional portion of the competition with local participants from the Biddeford High School. The participants of the brain bee are tutored by UNE students prior to the event.
    - Maine Science Festival brings science to the public. UNE faculty, professional staff and students involving 5-10 volunteers typically participate
    - Admission Leadership team

        - Providing practice college interviews for Biddeford High School juniors
        - Adding application review days for the junior year
    - Over the past five years, UNE has received an average of 25 applications / year from Biddeford High School students, and enrolled an average of 7 Biddeford students / year.
    - UNE admissions visits Biddeford High School at least twice per year – one for a traditional high school "UNE information" visit, the other for an on-spot review day of applicants. If Biddeford High School holds a general college fair, we will also attend. Other offerings have included a "transition to college" seminar for Biddeford high school seniors – offered in collaboration with UNE Affairs in 2018 – and an admissions essay writing workshop.
    - UNE has an articulation agreement with Biddeford High school, developed through our CAS Dean's office, recognizing students who have taken a significant number of Advanced Placement courses and exams with advanced standing at UNE.
    - We have employee and student discounts with business located in Biddeford.
    - UNE's residential meal plans have Nor'easter Dollars that can be spend at participating local restaurants.
    - UNE Athletic Events
        - From September 2019 to March 2020 welcomed 24,000 fans to varsity home games, many from our local community
        - From May 2019 – March 2020 we hosted just under 1,100 children age 4-18 at through our camps and clinics, again – many of were from our local community
        - We agreed to an MOU with the Biddeford Youth Hockey Association in March 2020, where UNE has given them permission to use "Junior Nor'easters" as their nickname. UNE recognizes that the roots of its ice hockey program began at Biddeford Ice Arena and recognizes the unique connection between the local youth hockey community, the Biddeford Ice Arena and UNE, UNE agrees to grant BYHA permission to use the Trademark, in the United States, under the terms provided herein.
    - Ketchum Library welcomes local community as a make shift coffee house.
    - The Ketchum Library participates with the MaineCAT system that allows anyone with a valid library card to borrow books from our library if they have a valid McArthur Library card.
    - Ketchum Library historical collections that are shared with the public
        - St. Francis High School and College Collection/ St. Francis Francophone Collection
        - The George & Barbara Bush Legacy collection

        - The Art gallery
        - Westbrook College history collection
        - Maine Women Writers collection

- **Clinic**
    - Cardiovascular Health Intervention Program for 100 students at Biddeford Intermediate School through UNE Department of Exercise and Sport Performance
    - Internship with Four Applied Exercise Science students at follow locations
        - Seacoast PT
        - Biddeford PT
        - Malon Chiropractic
        - Southern Maine Health Care
    - Internship with 5-7 students from UNE Athletic Training program intern at the Biddeford High School Athletics program
    - Laurie Cyr-Martel, UNE faculty, was recently called on by the Maine Association of Psychiatric Physicians and the Maine Department of Health and Human Services to assist with a new Frontline Warmline, designed to lend support to first responders and health care workers dealing with the coronavirus pandemic. She is part of the faculty who support the team of 90 volunteers made up of physicians, nurses, counselors, and social workers who staff the phone line from 8 a.m. until 8 p.m. each day. They offer what is known as psychological first-aid (PFA).
    - UNE Students volunteer to administer COVID-19 vaccinations to health care workers.
    - Five students in the College of Osteopathic Medicine formed the Maine COVID Sitters, a group of health professions students providing child care, pet care, and household services to health care families.
    - Their clinical studies on hold, UNE COM students take lead in COVID-19 testing efforts
    - UNE faculty providing vaccination training to help address public health emergency
    - UNE donates fit testing solution for N95 masks to Maine counties and Maine CDC
    - In remote Deer Isle, UNE COM students assist virus-stricken nursing home
    - UNE participates with City of Biddeford proclaiming March 15th -21st as Brain Awareness week.
    - UNE participates with City of Biddeford proclaiming the month of September as Chronic Pain Awareness month.
        - UNE schedules seminars through the UNE's Excellence in Collaborative Education (CECE & CEN) program to bring awareness of Chronic Pain

        - UNE Library & CEN created the Pain Chronicles at UNE with patient images and stories which were shared with the community about the research done at UNE.

- **Service**
    - UNE Student provide teachers as full-time educators in public school system
        - 3-current students are UNE Football players
    - Saco River Clean up: Sarae Sager (D.O.'21) is part of a group of scuba divers helping to remediate a portion of the Saco River which has been littered with beer bottles and other debris by inconsiderate partiers
    - UNE students, faculty and staff participate annually in Coastal Clean ups in Biddeford, Saco, and Old Orchard Beach
    - Biddeford Pool Water Quality sampling project. Over the past year, several UNE researchers, both faculty and student, and our Planning Office have been collaborating with the City of Biddeford and the Department of Marine Resources, DMR, on a testing protocol to continue and augment the work that the City and DMR have already done in this area. Along these lines, the University is committing research labor and $5000 towards the actual testing expenses.
    - West Brook Skating Rink; UNE Department of Campus Services staff have volunteered to work with the West Brook Rink volunteers to repair site lighting and snow removal equipment and to review the maintenance needs of the facility. UNE has offered the use of its bucket truck and assisted in obtaining donations of light fixtures.
    - Has provided space to host city events, like retirement parties
    - Donations of furniture to Biddeford schools and Public Works
    - Subsidizes the BSOOB Silver Line, and provides all faculty, staff and students free mass transit on BSOOB Transit, Portland Metro, South Portland City Bus Service, ZOOM and Metro Breeze
    - Provides ongoing maintenance of the Town Burial Grounds, including removal of downed trees this past winter
    - Provides maintenance of city sidewalks adjacent to campus
    - Has partnered with the Rachel Carson Wildlife Refuge to preserve approximately 5.79 acres of the Biddeford Pool Marshland.
    - Has partnered with Saco Valley Land Trust to preserve approximately 160 acres of UNE land, in its natural state.
    - UNE researchers have and are working on projects that effect the local environment and economy.
        - Green Crab
        - Kelp farming/Aquaculture
        - Salmon
        - Sturgeon

- Sustaining the Saco Estuary
- Saco River Water Quality
- Biddeford Pool Water Quality
- Assessment of the bird community that uses the Saco River's tidal marshes

- **Philanthropic**
  - 7-10 Students from UNE Applied Exercise Science program organize a 5k race to raise money and/or donations for the Biddeford Food Pantry
  - Annual Teddy Bear toss events at the UNE men's and women's hockey games, where after the first goals scored by UNE's teams, fans in attendance toss thousands of stuffed animals onto the ice. Those, and more, are then donated to the Southern Maine Health Center as well as the Seeds of Hope Neighborhood Center in Biddeford. This year, more than 3,400 stuffed animals were collected for donation, bringing the event's six-year total north of 18,000. The Forum Student Building Managers also raised $8,000 for the United Way of Southern Maine.
  - The University of New England lacrosse programs hosts the Annual Lax-4-Life event, with all the proceeds, benefiting The Barbara Bush Children's Hospital at Maine Medical Center in Portland
  - The University annually donates lightly used classroom furnishings to several agencies for repurposing in schools and recreational facilities. Residential furniture is donated annually to homeless shelters and other organizations supporting those in need.

b. An analysis of anticipated changes in outreach activities over the next five years.

The University will continue to provide an important service-related role in the community. Now more than ever, access to quality, free medical care is vital, and we recognize our commitment to providing this and other social service programs in the region. With cutbacks in budgets at area schools and in other programs, UNE understands the positive, important impact our student mentors and volunteers have, and will continue to build on those programs.

It is important to recognize that outside of UNE's significant volunteer and public service contributions to the region, UNE's economic impact is substantial. As of 2017 UNE's current direct sales impact on the Maine economy was is over $145 million, supporting over 3800 jobs and providing income of over $172 million to the households who hold these jobs – many right here in the local community. UNE is the 5th largest employer in York County and 20th largest in the state. These sales filter through to the local economy and provide ***a total economic impact on the state of over $1 billion***. Please see the attached 2016 report entitled "*The Economic & Fiscal Impact on Maine of The University*

of New England, Academic Year 2016".

This analysis estimates the UNE attracts over 24,000 visitors to Maine each year, generating $22 million in sales to local businesses and that UNE student spending drives another $42 million in sales.

Our ability to continue to positively impact the community through public service and volunteerism will increase exponentially with each new employee and student relationship we establish.

10 - Conceptual Development Program

a. A conceptual Site Plan at the same scale as the existing conditions plan showing the approximate size and location of proposed changes to buildings, structures, parking lots, pedestrian facilities, bicycle facilities, athletic fields and facilities, roads, and similar facilities proposed in the Master Plan. This should show new facilities, modifications or enlargements of existing facilities, and the planned removal of facilities.

Please refer to the *Campus Master Plan – University Properties* plan and the *Campus Master Plan - Five Year Development Strategy* plan, located in the back of this section.

b. An accompanying narrative or tables detailing the scale or size of the proposed improvements including the approximate height of buildings, the approximate peak elevation of buildings and structures referenced to NGVD, approximate floor area, approximate size of parking areas, or approximate occupancy.

Please refer to the *Campus Master Plan 5-year Projections* table, located at the back of this section.

c. A description of all development and design standards or provisions that will apply to the proposed improvements in accordance with subsection I.

See *Appendix A, Development and Design Standards*.

d. A schedule setting out when the improvements included in the conceptual development program are anticipated to be completed.

Please refer to the *Campus Master Plan 5-year Projections* table, located at the back of this section.

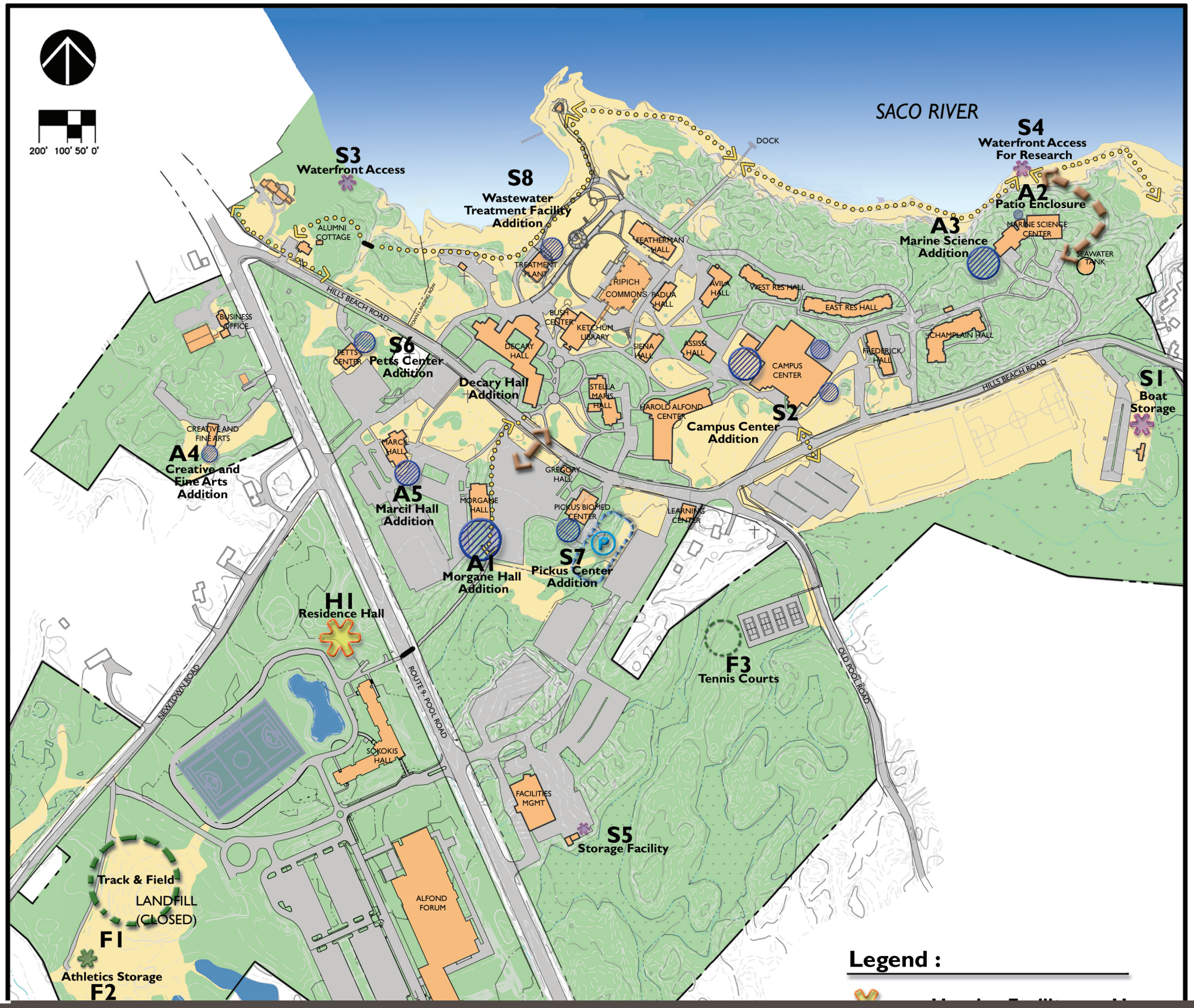
200' 100' 50' 0'
SACO RIVER
S3
Waterfront Access
S8
Wastewater
Treatment Facility
Addition
DOCK
S4
Waterfront Access
For Research
A2
Patio Enclosure
A3
Marine Science
Addition
ALUMNI
COTTAGE
TREATMENT
PLANT
FEATHERMAN
HALL
MARINE SCIENCE
CENTER
SEAWATER
TANK
HILLS BEACH ROAD
TOWN LANDING TRAIL
RIPICH
COMMONS
PADUA
HALL
AVILA
HALL
WEST RES HALL
EAST RES HALL
BUSINESS
OFFICE
BUSH
CENTER
KETCHUM
LIBRARY
CHAMPLAIN HALL
PETTS
CENTER
S6
Petts Center
Addition
DECARY
HALL
SIENA
HALL
ASSISI
HALL
FREDERICK
HALL
CAMPUS
CENTER
Decary Hall
Addition
STELLA
MARIS
HALL
HAROLD ALFOND
CENTER
S2
Campus Center
Addition
HILLS BEACH ROAD
S1
Boat
Storage
CREATIVE AND
FINE ARTS
A4
Creative and
Fine Arts
Addition
MARCIL
HALL
A5
Marcil Hall
Addition
GREGORY
HALL
MORGAN
HALL
PICKUS BIOMED
CENTER
LEARNING
CENTER
A1
Morgan Hall
Addition
S7
Pickus Center
Addition
H1
Residence Hall
F3
Tennis Courts
NEWTOWN ROAD
ROUTE 9, POOL ROAD
OLD POOL ROAD
SOKOKIS
HALL
FACILITIES
MGMT
S5
Storage Facility
ALFOND
FORUM
Track & Field
LANDFILL
(CLOSED)
F1
Athletics Storage
F2
Legend :

500' 250' 0'

ROUTE 9 - POOL ROAD

WETLAND PRESERVATION AREA

WEST STREET

WETLAND PRESERVATION AREA

364 ACRE PARCEL

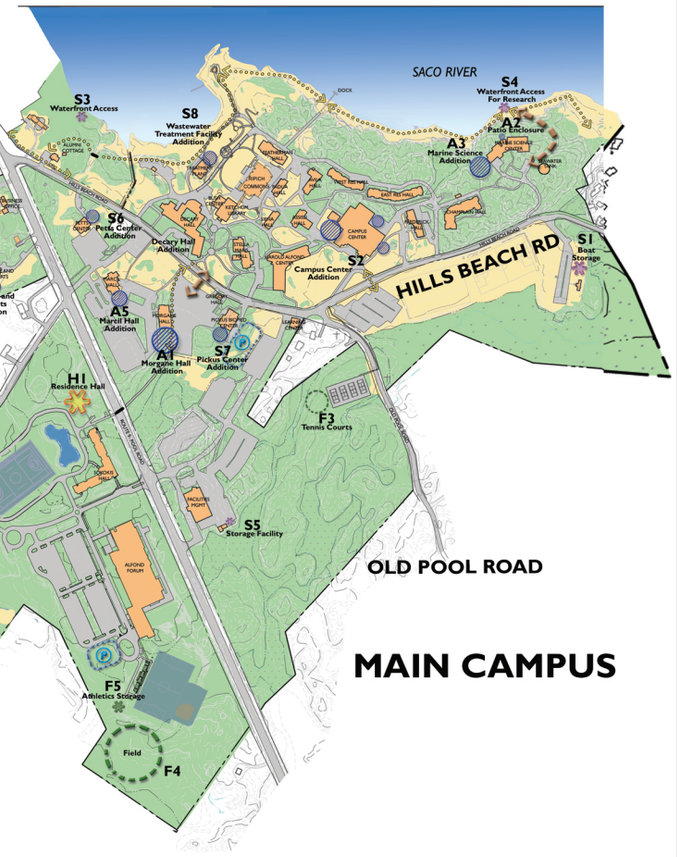

MAIN CAMPUS

Legend :

- Housing Facility
- Academic Facility
- Support Facility
- Athletic Facility
- Athletic Field
- Addition
- Vehicular Circulation
- Pedestrian Circulation
- Parking Facility
- University of New England Property (Cleared-Wooded)

January 18 2023

Note:
Graphic symbols are representative of approximate building size (footprint) but are not representative of building shape or height.

January 18, 2023

Site Design Associates
Civil Engineering and Land Planning

University of New England - Biddeford Campus
Campus Master Plan
University Properties

UNE

University of New England - Biddeford Campus

Campus Master Plan - Five Year Projections *(2023-2027)*

Programming Building Blocks

12/7/2022

HOUSING								
	Description	**PRIORITY**	**APPROXIMATE FOOTPRINT (SQ. FT.)**	**STORIES**	**APPROXIMATE TOTAL (SQ. FT.)**	**ESTIMATED OCCUPANCY**	**HEIGHT****	**NGVD****
H1	Residence Hall	3	25,000	4	100,000	300 (b)	50'	108
ACADEMICS								
	Description	**PRIORITY**	**APPROXIMATE FOOTPRINT (SQ. FT.)**	**STORIES**	**APPROXIMATE TOTAL (SQ. FT.)**	**ESTIMATED OCCUPANCY**	**HEIGHT****	**NGVD**
A1	Morgane Hall Addition	2	15,000	3	45,000	6 (o)	65'	107'
A2	Marine Science Patio Enclosure	1	1,100	1	1,100	0 (o)	35'	70
A3	Marine Science Addition	1	10,000	2	20,000	5 (o)	35'	70'
A4	Creative and Fine Arts Addition	2	5,000	2	10,000	0 (o)	35'	90'
A5	Marcil Hall Addition	3	7,000	3	21,000	6 (o)	50'	112'
SUPPORT								
	Description	**PRIORITY**	**APPROXIMATE FOOTPRINT (SQ. FT.)**	**STORIES**	**APPROXIMATE TOTAL (SQ. FT.)**	**ESTIMATED OCCUPANCY**	**HEIGHT****	**NGVD**
S1	Storage Facility	2	8,000	1	8,000	na	35'	55
S2	Campus Center	3	12,000	2	24,000	2 (o)	50'	80'
S3	Waterfront Access for Recreation	1	na	na	na	na	na	na
S4	Waterfront Access for Research	1	na	na	na	na	na	na
S5	Storage Facility	2	2,000	1	2,000	na	35'	75
S6	Petts Center Addition	2	5,000	2	10,000	7 (o)	35'	85'
S7	Pickus Center Addition	3	5,000	3	15,000	6 (o)	65'	89'
S8	Wastewater Treatment Facility Addition	3	6,000	1	6,000	0 (o)	35'	47'
ATHLETICS								
	Description	**PRIORITY**	**APPROXIMATE FOOTPRINT (SQ. FT.)**	**STORIES**	**APPROXIMATE TOTAL (SQ. FT.)**	**ESTIMATED OCCUPANCY**	**HEIGHT****	**NGVD**
F1	Athletic Track/Field	1	na	na	na	na	*na*	na
F2	Athletic Storage	2	2,500	1	2,500	0 (o)	35'	100
F3	Tennis Courts/Pressbox/Storage	1	160	2	240	na	*35'*	60
F4	Athletic Field	1	na	na	na	na	*na*	na
F5	Athletic Storage	2	2,500	1	2,500	0 (o)	35'	85

Occupancy Key:

(b) = Beds

(o) = Offices

** All building heights are approximates

Priority Key:

1. = 1-3 years
2. = 2-4 years
3. = 3-5 years

APPENDIX A

UNIVERSITY OF NEW ENGLAND
INSTITUTIONAL ZONE
MASTER PLAN SUBMISSION
2023-2027

Appendix Section 1 - Landscaping

I. Development and Design Standards

The Institutional Master Plan shall establish development and design standards that shall apply to all development proposals and other improvements within the Institutional Zone. These development and design standards will apply to individual projects that are submitted for site plan review. These standards shall foster the development of a visually and architecturally integrated campus that is safe, environmentally sensitive, and that minimizes the adverse impact of the campus on neighboring residential areas. At a minimum, these development and design standards shall address the following areas:

1. Landscaping - The standards shall establish a general pattern for all campus landscaping including the typical size and type of plantings and shall detail how landscaping will be used to enhance the visual environment of the campus, shield and soften service and parking areas, and minimize impacts on surrounding residential areas and the users of public streets through the campus.

Landscape and Planting Guidelines

Introduction

The campus contains an arrangement of buildings sited on an undulating landform within the confines of a wooded landscape.

These improvements shall consist of aesthetic planting designs that provide identity to site-specific areas, such as a specimen tree set in a corner of a quad or specialty plantings of native flowering trees at a building entrance. Specific street tree species may be planted along the primary vehicular routes to establish a 'spine' across the campus while other varieties are used along pedestrian ways. As well, improvements may consist of planting designs that provide identity and character to the campus as a whole. This will be generally be achieved with the use of native varieties present in the surrounding woodlands and reaffirming the rural character of the campus with preservation of the natural topography and existing native vegetation.

In addition to these general planting concepts and guidelines, the University seeks to begin the creation of a campus arboretum. The arboretum would serve to integrate the natural environment into the academic classroom. Areas of development would be selected based on their existing unique characteristics, or potential for enhancement. These areas would be developed with plantings (native and non-native specimen species) and hardscapes, in an effort to provide educational opportunities in an enhanced exterior setting.

Areas of consideration include the following:

The University will look to enhance the Main Entrance at Hills Beach Road and Route 9 to make it more welcoming and visible to drivers that are headed northbound. This work could include a new stone wall with institutional signage, gateway signage, landscaping elements and new planting beds.

A series of nature trails exist along much of the University of New England's shoreline. These trails provide an exceptional opportunity to experience the coastal environment, and connect the campus community to the Saco River and Atlantic Ocean. The University would like to expand this connectivity and would like to extend this trail system along its entire shoreline, connecting the Welcome Cottage to Jordan Point, and then on to the University's beach. This would enhance the connectivity to the Saco River and provide for many new educational opportunities, as there are several microhabitats in that area that do not exist anywhere else on campus. This new trail will require a bridge to cross over the stream in this area. This trail would be coordinated with the Maine DEP, Saco River Corridor Commission and the City. Handicap accessibility will be considered in this enhancement.

The vision of a campus wide arboretum is one that is shared by many in the Campus Community. Thus, the University may work towards developing landscaped areas specifically to utilize them to enhance the academic environment of the campus as a whole. These areas could have complimenting hardscaped areas (walks, patios, courtyards, seating or retaining walls, etc.) to allow for a more intense use, while protecting the adjacent, highlighted vegetative areas

Overview
Historically, a simple vocabulary of lawns and canopy trees defined the development of most American campus landscapes. The University of New England's Biddeford Campus contains the beginnings of such a vocabulary: mature trees among expanses of lawn. The purpose of the planting guidelines is to reinforce the positive elements of the existing planting vocabulary while accentuating the rural quality that currently defines the campus landscape character.

The planting guidelines are organized in nine categories of simple planting design intent that may bring individual identity to specific site locations or add continuity to the campus as a whole. Intrinsic to these guidelines are the following principals:

- Native plant species should be utilized, except in areas where it is advantageous to create pockets of non-native species in an effort to provide exposures to species that might not normally be found in the area.

- Sensitivity to natural ecosystems shall be enforced.

- Plant material with low maintenance and water use requirements should be specified.

- Proper arboricultural practices should be utilized for future tree planting.

- Existing mature trees should be protected in areas of defined open space.

- Landscaping designs and maintenance should consider the safety of the University community.

Guidelines

Street Trees

The planting of street trees is recommended in order to help establish a visual hierarchy across the campus relative to circulation, delineating between primary, secondary, and tertiary vehicular routes. A rhythm and pattern of street trees, mirrored along a road's centerline, provides a sense of perspective, channels views, establishes scale, and sets order across a longer distance. Tree species with similar growth habits should be used along Hills Beach Road to create definition of a campus edge along the primary vehicular route that bisects the campus. A different street variety should then be used along campus streets that branch off of Hills Beach Road in order to establish a hierarchical order to proposed street tree patterns.

The use of various species with similar growth habits on a longer road such as Hill Beach is to reduce susceptibility of disease and pest that may arise when a single species is used. Changes to the plant variety should be coordinated with breaks in tree rows due to sidewalk crossings, driveway curb cuts, and underground utilities.

Shade Trees

The rural character of the campus allows for shade trees to be planted in most locations, either individually or in groups. In turn, this will allow for an increase in the variety of native species and bio-diversity of the campus ecosystem.

Informal gathering places along pedestrian circulation routes should be planted with shade trees to provide shade and to act as a 'place marker' from a distance. Pedestrians looking for a place to rest or relax will have a visual cue of shaded lawn areas established by large shade trees. Additionally, intermittent plantings of a shade tree should be made along the edge of passive-use space to provide shade and rest from activities.

Multiple shade trees should be planted close together in various campus locations to create groves. This solid vegetative form may be formal or informal, but the result is that no individual tree stands out; instead the trees have a collective presence within the landscape. This type of planting should be encouraged because it is representative of the native vegetation found along the campus periphery.

Flowering Trees

The use of flowering trees creates an intimate scale due to the low height of the tree's canopy and with the tree's flowers and foliage commonly at pedestrian eye level.

Flowering trees should be used in various campus locations including campus gateways and building entrances. Designs for these site-specific locations create a spatial design individual to a location while adding continuity across the campus. For instance, a formal design at an academic building entrance can be made with pink flowering trees while the same trees are planted in an informal manner at residential buildings.

While a planting of flowering trees directs focus to an area, the planting design needs to be sensitive to the unique qualities and character of that area. Considerations should be made to site-specific soil conditions and other environmental constraints such as solar exposure.

Evergreen Trees
Low branching coniferous trees that are dense in their leafing pattern are often best utilized as visual and physical barriers. Plantings of evergreens should be used primarily to direct views away from or screen building service areas or other visually unattractive campus elements such as trash dumpsters.

Although evergreen trees and shrubs are useful as visual or circulation buffers, careful consideration should be made so that plantings do not interrupt desired view corridors, open space or pose a public safety concern by providing too much of a visual screen. Additionally, similar to all the other plant types, the long-term growth habits of particular species needs to be incorporated into the design process in order for the best suited plant material t to be selected.

Specimen Trees
Certain specimen trees should be considered for selection because of some unique quality that a specific tree may offer. Such trees are usually planted individually, to create a point of reference or focal point within a particular spatial context. For instance, a mature specimen tree may be located close to building to create a sense of scale or a planted alone so that its growth habit can be observed from a set distance.

Spatial character of a campus location can be well defined with a specimen tree. As new buildings are erected and the dynamics of the surrounding space changes, strategic plantings of specimen trees is encouraged to establish new visual connections. This is achieved by locating a specimen tree at terminal ends of an open space quadrangle. Special consideration should be paid to the selected specie of tree, with the ultimate aim of increasing bio-diversity on campus. Species should be selected and matched for particular locations through criteria such as seasonal interest and mature height of the tree, setting and backdrop of the tree from distant views, and environmental constraints similar to flowering trees.

Future development should be sensitive to the location and condition of applicable trees from early design stages. As well, the current maintenance program, which incorporates arboricultural practices, should continue in order to preserve and protect the existing trees.

Foundation Plantings
Historically, foundation plantings were very limited in use around American campus buildings. This planting design treatment should be a limited practice across the Biddeford campus. Where foundation plantings are used, the design shall consist of shrubs, groundcovers, flowering trees and specimen trees used in limited numbers to highlight building entrances or unique features of architecture. Additionally, foundation plantings consisting of mostly evergreen plant material shall be used in locations to screen building appurtenances such as air conditioning units and trash dumpsters.

Shrub and Groundcovers
This planting guideline is the only category to include both deciduous and coniferous plants. Recommended shrubs have a mature height of approximately two feet, seasonal interests of foliage, and may have horizontal growth habit. The recommended groundcovers will add color, uniformity, and texture to the ground plane, help prevent erosion, and provide an alternate to lawn plantings.

Use will be in limited locations to provide definition of space and control of pedestrian circulation. Supplement shade, flowering tree plantings and foundation plantings at campus gateways and building entries to establish campus identity and continuity. The use of native species will reinforce the rural campus character by bringing the character of the bordering existing woodlands into the campus interior.

Special Zones
Special zones incorporate all the previous planting guidelines. For example, a special zone may incorporate a design of flowering trees and evergreens to note a campus marker, such as sign or information board for prospective and new students to find their way across campus. In particular locations, planting designs of groundcovers and specimen trees connected with native grasses may create a visual corridor and links between academic buildings or informal seating areas along pedestrian routes. In particular, special zones are to be used to establish or supplement planting designs to reinforce a campus wide identity, such as enhancing campus entry areas into campus gateways.

Plant Species Guidelines

Plant species need to be appropriate to the particular landscape and its scale, land use, circulation and gathering character, topography, and views. Species selected should reinforce the strengths of the landscape area and relationship to similar landscapes around the campus. This will work to add individual identity of each zone while uniting the campus landscape.

All plant material has been selected for seasonal and visual interest, mature height relative to location, desired growth habit and structure, visual tolerance, and specific soil conditions found across the campus. All the listed plant material is native to the New England landscape and will work to ensure a sustainable campus landscape. (Non-native

species may be selected and utilized, particularly in areas designated as part of the proposed campus arboretum.)

Street Trees

Scientific Name	Common Name	Remarks
Acer rubrum	Red Maple	Salt tolerant
Acer saccharum	Sugar Maple	
Fraxinus americana	White Ash	
Fraxinus pensylvania	Green Ash	
Nyssa sylvatica	Black Gum	Salt tolerant
Platanus occidentalis	American Sycamore	
Quercus alba	White Oak	Salt tolerant
Quercus macroarpa	Bur Oak	Salt tolerant
Quercus borealis	Red Oak	Salt tolerant
Tilia americana	American Linden	

Shade Trees

Scientific Name	Common Name	Remarks
Acer rubrum	Red Maple	Salt tolerant
Acer saccharum	Sugar Maple	
Betula alleghaniensis	Yellow Birch	
Betula lenta	Sweet Birch	
Betula papyrifera	Paper Birch	
Carya ovata	Shagbark Hickory	Salt tolerant
Fagus grandifolia	American Beech	
Fraxinus americana	White Ash	
Fraxinus pensylvania	Green Ash	
Nyssa sylvatica	Black Gum	Salt tolerant
Platanus occidentalis	American Sycamore	
Quercus alba	White Oak	Salt tolerant
Quercus macroarpa	Bur Oak	Salt tolerant
Quercus rubra	Red Oak	Salt tolerant
Quercus palustris	Pin Oak	
Tilia americana	American Linden	

Flowering Trees

Scientific Name	Common Name	Remarks
Acer pensylvanicum	Striped Maple	Salt tolerant
Amelanchier canadensis	Shadblow Serviceberry	Salt tolerant
Amelanchier laevis	Allegheny Serviceberry	
Aronia arbutifolia	Red chokeberry	Salt tolerant
Aronia melanocarpa	Black Chokeberry	

Cornus alternifolia	Pagoda Dogwood	
Sorbus americana	American Mountain Ash	

Evergreen Trees

Scientific Name	Common Name	Remarks
Abies balsamea	Balsam Fir	
Chamaecyparis thyoides	Atlantic Whitecedar	
Juniperus virginiana	Eastern Red Cedar	Salt tolerant
Picea glauca	White Spruce	Salt tolerant
Pinus banksiana	Jack Pine	Salt tolerant
Pinus resinosa	Red Pine	
Pinus strobus	Eastern White Pine	
Thuja occidentalis	American Arbor-vitae	Salt tolerant
Tsuga canadensis	Canada Hemlock	

Specimen Trees

Scientific Name	Common Name	Remarks
Acer rubrum	Red Maple	Salt tolerant
Arctostaphylos uva-ursi	Bearberry	Evergreen
Aronia arbutifolia	Red Chokeberry	
Aronia melanocarpa	Black Chokeberry	
Betula alleghaniensis	Yellow Birch	
Betula papyrifera	Paper Birch	
Betula populifera	Gray Birch	
Carya ovata	Shagbark Hickory	Salt tolerant
Carpinus caroliniana	American Hornbeam	
Castanea dentata	American Chestnut	
Crategus crusgalli	Cockspur Hawthorn	
Crataegus viridis	Green Hawthorn	
Fagus grandifolia	American Beech	
Fraxinus americana	White Ash	
Fraxinus pensylvania	Green Ash	
Nyssa sylvatica	Black Gum	Salt tolerant
Populus grandidentata	Bigtooth Aspen	
Populus tremuloides	Quaking Aspen	
Quercus alba	White Oak	Salt tolerant
Quercus macroarpa	Bur Oak	Salt tolerant
Quercus rubra	Red Oak	Salt tolerant

Foundation Plantings

Scientific Name	Common Name	Remarks
Amelanchier arborea	Downy Serviceberry	
Amelanchier canadensis	Shadblow Serviceberry	Salt tolerant
Amelanchier laevis	Allegheny Serviceberry	
Amelanchier polifolia	Bog Rosemary	Evergreen
Arctostaphylos uva-ursi	Bearberry	Evergreen
Aronia arbutifolia	Red Chokeberry	
Aronia melanocarpa	Black Chokeberry	
Bouteloua gracilis	Misquito Grass	
Cornus sericea	Red-oiser Dogwood	Salt tolerant
Deschampsia caespitosa	Tufted Hair Grass	Salt tolerant
Hamamelis viriniana	Common Witchhazel	
Ilex glabra	Inkberry	Salt tolerant
Ilex verticillata	Winterberry	
Kalmia latifolia	Mountainlaurel	Evergreen
Myrica pensylvanica	Bayberry	Salt tolerant
Festuca amethystina	Large Blue Fescue	
Gaultheria procumbens	Checkerberry	
Geranium sanguineum	Blood-red Cranesbill	
Helictotrichon sempervirens	Blue Oat Grass	Salt tolerant
Kalmia latifolia	Mountainlaurel	
Koeleria glauca	Blue Hair Grass	
Panicum virgatum	Switch Grass	Salt tolerant
Pennisetum alopecuroides	Fountain Grass	Salt tolerant
Phalaris arundinacea picta	Ribbon Grass	
Phlox subulata	Moss Pink	Salt tolerant
Potentilla fruticosa	Shrubby Cinquefoil	Salt tolerant
Rhododendron maximum	Rosebay Rhododendron	
Rhododendron prinophyllum	Roseshell Azalea	Evergreen
Rhododendron viscosum	Swamp Azalea	Evergreen
Rosa rugosa	Rugosa Rose	
Rosa virgiania	Virginia Rose	
Symphoricarpos alba	Common Snowberry	
Symphoricarpos orbiculatus	Coralberry	
Vaccinium corymbosum	Highbush Blueberry	
Viburnum dentatum	Arrowwood	Salt tolerant
Vaccinium macrocarpon	American Cranberry	
Viburnum prunifolium	Blackhaw	Salt tolerant

Shrub and Groundcovers

Scientific Name	Common Name	Remarks
Bouteloua gracilis	Misquito Grass	
Casmanthium latifolium	Northern Sea Oats	Salt tolerant
Cornus sericea	Red-oiser Dogwood	Salt tolerant
Deschampsia caespitosa	Tufted Hair Grass	Salt tolerant
Festuca amethystina	Large Blue Fescue	
Gaultheria procumbens	Checkerberry	
Geranium sanguineum	Blood-red Cranesbill	
Hamamelis virginiana	Common Witchhazel	
Helictotrichon sempervirens	Blue Oat Grass	Salt tolerant
Kalmia latifolia	Mountainlaurel	
Koeleria glauca	Blue Hair Grass	
Panicum virgatum	Switch Grass	Salt tolerant
Pennisetum alopecuroides	Fountain Grass	Salt tolerant
Phalaris arundinacea picta	Ribbon Grass	
Phlox subulata	Moss Pink	Salt tolerant
Potentilla fruticosa var. *arbuscula*		Shrubby Cinquefoil
	Salt tolerant	
Rhododendron prinophyllum	Roseshell Azalea	Evergreen
Rhododendron viscosum	Swamp Azalea	Evergreen
Rosa rugosa	Rugosa Rose	
Rosa virgiania	Virginia Rose	
Symphoricarpos alba	Common Snowberry	
Symphoricarpos orbiculatus	Coralberry	
Vaccinium macrocarpon	American Cranberry	

Special Zones

Scientific Name	Common Name	Remarks
Amelanchier arborea	Downy Serviceberry	
Amelanchier canadensis	Shadblow Serviceberry	Salt tolerant
Amelanchier laevis	Allegheny Serviceberry	
Amelanchier polifolia	Bog Rosemary	Evergreen
Arctostaphylos uva-ursi	Bearberry	Salt tolerant
Aronia arbutifolia	Red Chokeberry	
Aronia melanocarpa	Black Chokeberry	
Bergenia cordifolia	Heartleaf Bergenia	Evergreen

Betula populifera	**Gray Birch**	
Bouteloua gracilis	**Misquito Grass**	
Cornus sericea	**Red-oiser Dogwood**	**Salt tolerant**
Deschampsia caespitosa	**Tufted Hair Grass**	**Salt tolerant**
Festuca amethystina	**Large Blue Fescue**	
Gaultheria procumbens	**Checkerberry**	
Geranium sanguineum	**Blood-red Cranesbill**	
Hamamelis virginiana	**Common Witchhazel**	
Helictotrichon sempervirens	**Blue Oat Grass**	**Salt tolerant**
Kalmia latifolia	**Mountainlaurel**	
Koeleria glauca	**Blue Hair Grass**	
Panicum virgatum	**Switch Grass**	**Salt tolerant**
Pennisetum alopecuroides	**Fountain Grass**	**Salt tolerant**
Phalaris arundinacea picta	**Ribbon Grass**	
Phlox subulata	**Moss Pink**	**Salt tolerant**
Potentilla fruticosa	**Shrubby Cinquefoil**	**Salt tolerant**
Rhododendron prinophyllum	**Roseshell Azalea**	**Evergreen**
Rhododendron viscosum	**Swamp Azalea**	**Evergreen**
Rosa rugosa	**Rugosa Rose**	
Rosa virgiania	**Virginia Rose**	
Sorbus Americana	**American Mountain Ash**	
Symphoricarpos alba	**Common Snowberry**	
Symphoricarpos orbiculatus	**Coralberry**	
Vaccinium macrocarpon	**American Cranberry**	

Appendix Section 2 – Exterior Lighting

I. Development and Design Standards

The Institutional Master Plan shall establish development and design standards that shall apply to all development proposals and other improvements within the Institutional Zone. These development and design standards will apply to individual projects that are submitted for site plan review. These standards shall foster the development of a visually and architecturally integrated campus that is safe, environmentally sensitive, and that minimizes the adverse impact of the campus on neighboring residential areas. At a minimum, these development and design standards shall address the following areas:

2. Exterior Lighting - The standards shall establish a general lighting theme for the campus and shall identify the appropriate maximum, average, or minimum illumination levels and uniformity ratios for various areas and facilities, the typical type of lighting fixtures and poles that will be used, and shall detail how nighttime sky glow and light intrusion on neighboring residential areas will be minimized.

Exterior Lighting – General Site

The purpose of this document is to provide recommendations for exterior lighting master plan standards in the Biddeford **IN Zone**. Included are lighting standards for parking lots, roadways, walkways, and landscape accent areas.

References are made in this document to lighting standards published by the *Illuminating Engineering Society of North America (IESNA)*.

- The Lighting Handbook, 9th Edition
- RP-33-99 Lighting for Exterior Environments
- RP-6-01 Sports and Recreational Area Lighting
- RP-8-00 Roadway Lighting
- DG-5-94 Recommended Lighting for Walkways and Class 1 Bikeways
- RP-33-99 Lighting for Exterior Environments
- RP-6-01 Sports and Recreational Area Lighting

Lighting Fixture Distribution Classifications

The primary components of a light fixture that determine its performance are the lamp, reflector/refractor system, and ballast. The *IESNA* classifies exterior lighting fixtures by their performance characteristics relating to optical control: full cutoff, cutoff, semicutoff and noncutoff:

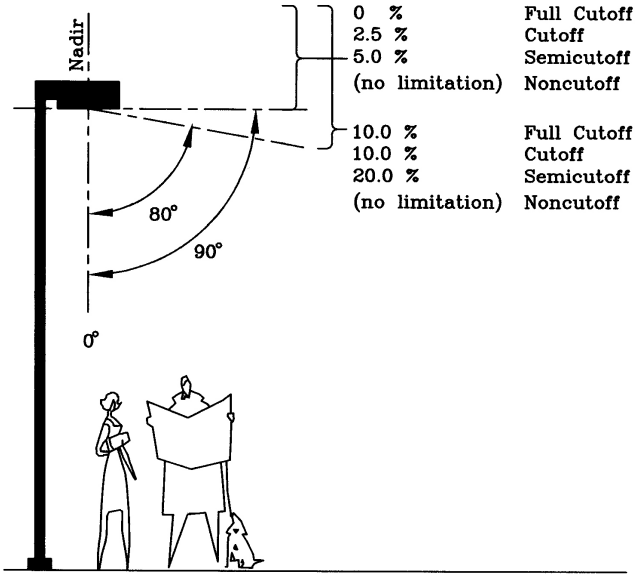

Fig. 1 *IESNA* Luminaire Cutoff Classifications

Full Cutoff

A luminaire light distribution where zero candela intensity occurs at an angle of 90° above nadir, and at all greater angles from nadir. Additionally, the candela per 1000 lamp lumens does not numerically exceed 100 (10 percent) at a vertical angle of 80° above nadir. This applies to all lateral angles around the luminaire.

Cutoff

A luminaire light distribution where the candela per 1000 lamp lumens does not numerically exceed 25 (2 1/2 percent) at a vertical angle of 90° above nadir and 100 (10 percent) at a vertical angle of 80° above nadir. This applies to all lateral angles around the luminaire.

Semicutoff

A luminaire light distribution where the candela per 1000 lamp lumens does not numerically exceed 50 (5 percent) at a vertical angle of 90° above nadir and 200 (20 percent) at a vertical angle of 80° above nadir. This applies to all lateral angles around the luminaire.

Noncutoff

A luminaire light distribution where there is no candela limitation in the zone above maximum candela.

Exterior Lighting Performance Standards

Roadways

Exterior illuminance levels for roadways in the **IN Zone** should conform to the following criteria listed in **Table 1.** For the **IN Zone**, there are two roadway use classifications that apply: *Collector* and *Local*. In each case, the classification for pedestrian/vehicle conflict would be a *High* rating.

Collector Roadway: Roadways servicing traffic between major and local streets. These are streets used mainly for traffic movements within residential, commercial and industrial areas. They do not handle long, through trips. Collector streets may be used for truck or bus movements and give direct service to abutting properties.

Local Roadway: Local streets are used primarily for direct access to residential, commercial, industrial, or other abutting property. They make up a large percentage of the total street system, but carry a small proportion of vehicular traffic.

High Pedestrian Conflict Areas: Areas with significant numbers of pedestrians expected to be on the sidewalks or crossing the streets during darkness. Examples are downtown retail areas, near theaters, concert halls, stadiums, and transit terminals.

IESNA RP-8-00 Roadway Lighting

MAINTAINED ILLUMINANCE
VALUES FOR ROADWAYS IN FOOTCANDLES
TABLE 1

	Pedestrian Conflict Area	*Ave. Illuminance (Footcandles)*	*Illuminance Uniformity Ratio (Average-to-Minimum)*
Collector	High	1.2	4.0 to 1
Local	High	0.8	6.0 to 1

Parking Areas

Exterior illuminance levels for outdoor parking lots in the **IN Zone** should conform to the following criteria listed in **Table 2.**

MAINTAINED ILLUMINANCE
VALUES FOR OPEN PARKING LOTS
TABLE 2

	Basic	*Enhanced Security*[1]
Minimum Horizontal Illuminance	0.2 footcandles[2]	0.5 footcandles[2]
Maximum Horizontal Illuminance	7.5 footcandles[2]	10.0 footcandles[2]
Average Horizontal Illuminance	1.5 – 2.0 footcandles	2.0 – 2.5 footcandles
Uniformity Ratio, Maximum to Minimum	20:1	15:1

[1] If personal security or vandalism is a likely and/or severe problem, an increase of the basic level may be appropriate.

[2] Measured on the parking surface, without any shadowing effect from parked vehicles or trees at points of measurement.

Walkways and Bikeways

Exterior illuminance levels for outdoor walkways and bikeways that are remote from streets in the **IN Zone** should conform to the following criteria listed in **Table 3.** The recommendations are based on classification of walkway locations. For the **IN Zone**, the walkway use classifications that best applies, is that of *Intermediate.*

Intermediate Walkway: Those areas of a municipality often characterized by moderately heavy nighttime pedestrian activity such as in blocks having libraries, community recreation centers, large apartment buildings, industrial buildings, or neighborhood retail stores.

MAINTAINED ILLUMINANCE
VALUES FOR WALKWAYS
TABLE 3

	Average Horizontal (footcandles)[1]	*Average Hor.Uniformity (Ave.-to-Min.)*	*Average Vertical (footcandles)*[2]	*Average Vert. Uniformity (Ave.-to-Min.)*
Intermediate (Average Conditions)	0.5	4:1		
Intermediate (Special Conditions)			1.0	5:1

[1] Values measured or calculated at ground level.

[2] Values measured or calculated at 5 feet above pavement, in both directions, parallel to the direction of travel on the walkway.

Exterior Lighting Control Standards

Light Trespass

Exterior lighting in the **IN Zone** should be selected and arranged such that not more than 0.1 footcandles are allowed to extend beyond property lines.

Glare Control

Exterior lighting fixtures shall include proper shielding and aiming such that excessive brightness is not seen from neighboring properties or along adjacent roadways.

Light Pollution

Exterior lighting fixtures used for the lighting of parking lots, walkways, and roadways shall not direct light at angles higher than 90 degrees above the horizontal. Directional accent lighting fixtures for accent of landscaping, signage and buildings shall include shielding as required to prevent light from being directed beyond the surfaces intended to be lighted.

Exterior Lighting Equipment Selection Standards

For the purposes of establishing a sense of visual consistency, and to assure that glare and fixture brightness are properly controlled, the following lighting equipment standards in **Table 4** should be followed.

EXTERIOR LIGHTING
EQUIPMENT REQUIREMENTS
TABLE 4

Roadways		
	Luminaires:	*IESNA* full cutoff distribution classification with flush, flat lenses.
	Lamps:	Metal Halide, 250 to 400 watt, or the equivalent in LED.
	Controls:	Integral photocell.
	Lighting Poles:	Pole heights between 12 and 20 feet.
Parking Areas		
	Luminaires:	*IESNA* full cutoff distribution classification with flush, flat lenses.
	Lamps:	Metal Halide, 250 to 400 watt, or the equivalent in LED.
	Controls:	Integral photocell.
	Lighting Poles:	Pole heights between 16 and 24 feet.

Walkways

Luminaires:	*IESNA* full cutoff distribution classification with flush, flat lenses.
Lamps:	Metal Halide, 100 to 250 watt, or the equivalent in LED.
Controls:	Integral photocell.
Lighting Poles:	Pole heights between 10 and 12 feet.

Building Entryways

Luminaires:	*IESNA* full cutoff, cutoff, or semi-cutoff distribution classification.
Lamps:	Metal Halide, 35 to 150 watt. Compact fluorescent 13 to 42 watts, or the equivalent in LED.
Controls:	Integral photocell and/or local switching.
Mounting Heights:	Between 10 and 16 feet

Building Entry Plazas

Luminaires:	36 inch high bollard lights with louver shields.
Lamps:	Metal halide 35 to150 watts, or the equivalent in LED.
Controls:	Local switching.

Building and Landscape Accent Lighting

Luminaires:	Ground mounted floodlights with front face louvers or top/side shields.
Lamps:	Metal halide 35 to150 watts, or the equivalent in LED.
Controls:	Integral photocell.

Exterior Lighting – Athletic Field Lighting

Class of Play

The *Illuminating Engineering Society of North America (IESNA)* publishes recommendations for sports lighting applications. Included in the *IESNA* publication *RP-6* is information pertaining to general outdoor sports lighting practices as well as specific suggestions for equipment layout and illuminance levels. Illuminance recommendations are organized in terms of need given the sport being lighted and the anticipated class of play. The *IESNA* has identified four general classes for consideration:

- Class I — For competition play before a large group of spectators (over 5000). Included in this classification are facilities for professional, college, semi-professional and sports club levels of play.
- Class II — For competition play with less than 5000 spectators. Included in this classification are facilities for college, semi-professional, sports club, amateur league, and high school levels of play.
- Class III — For competition play with some provisions for spectators. Included in this classification are facilities for sports club, high school, and training facilities levels of play.
- Class IV — Facilities with no provisions for spectators. Included in this classification are facilities for amateur leagues, high schools, training facilities, elementary schools, recreational events, and social events level of play.

Each of these classes requires different levels of illumination given the corresponding purpose of play, skill levels of players, and spectator/broadcasting needs.

Soccer Field Lighting

Soccer is considered a multi-directional aerial sport since it involves the playing of a ball in the air as well as on the ground. Accordingly, it is important that soccer field lighting provide both adequate levels of horizontal illuminance to light the playing field, as well as vertical illuminance to light the ball in flight. The degree to which a lighting solution can provide both high levels of horizontal and vertical illuminance is largely dependant upon the location of luminaires with respect to the playing field. Luminaires that are mounted on tall poles aimed in a sharp downward direction can easily provide high levels of horizontal illuminance at the field below. Lighting the sides of a ball in flight, however, is made difficult when a vast majority of the light is delivered from overhead at great mounting heights. Vertical illuminance is more easily achieved from luminaires that are located at lower mounting heights, allowing for light to be directed from the sides. A successful athletic field lighting solution is one that achieves a balance between horizontal and vertical illuminance needs. Lighting pole heights and setback locations play a critical role in achieving this balance. As a design guide, the relationship of the pole height to the pole setback dimension from the soccer field should be as follows: pole height = (setback dimension plus 1/3 the width of the playing field) times the tangent of 30 degrees.

$$PH = (SB + 1/3W)(\tan 30°)$$

As the setback dimension increases, so too does the pole height. At sites where there is a limitation of space available for pole setback, the pole heights become shorter. Ideally, the setback distance should not be less than about fifteen feet. This would result in a pole height of about fifty feet for the average size soccer field. Poles that are less than 50 feet in height significantly increase the chance for unacceptable glare seen from areas that are adjacent to the field due to the resulting high aiming angles of the sports lights.

Softball Field Lighting

Softball is also considered a multi-directional aerial sport since it involves the playing of a ball in the air as well as on the ground. Like soccer, it is important that softball field lighting provide both adequate levels of horizontal illuminance to light the playing field, as well as vertical illuminance to light the ball in flight. Lighting poles are generally located parallel to the base lines to light the infield, and along the outfield fence to light the outfield. Pole heights must be selected to not only provide proper coverage of the playing field, but also to assure that the top of the lighting beam from floodlights forms an angle with the horizontal of at least 10 degrees.

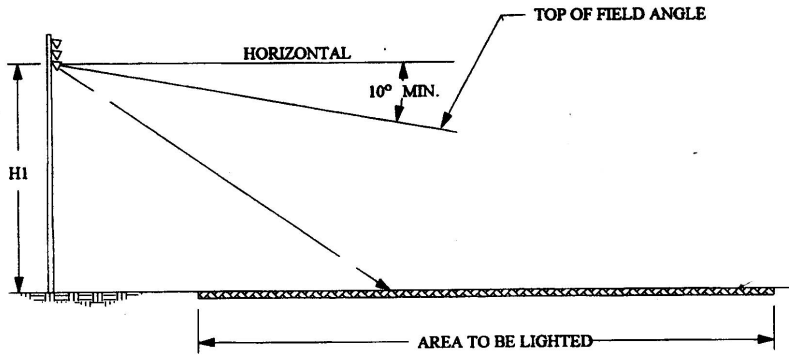

Fig. 1 *Softball Floodlight*

Athletic Field Lighting Performance Standards

Illuminance Standards

Maintained illuminance levels for athletic fields should be as listed in **Table 1** and **Table 2**, below. Illuminance criteria is listed in footcandles, measured at the playing surface.

MAINTAINED ILLUMINANCE
VALUES FOR SOCCER FIELDS

TABLE 1

	Illuminance	*Max. to Min. Uniformity*
Class I	75 FC	1.7 : 1
Class II	50 FC	2.5 : 1
Class III	30 FC	3 : 1
Class IV	20 FC	4 : 1

MAINTAINED ILLUMINANCE
VALUES FOR SOFTBALL FIELDS

TABLE 2

	Infield		**Outfield**	
	Infield Illuminance	*Max. to Min. Uniformity*	*Outfield Illuminance*	*Max. to Min. Uniformity*
Class I	150 FC	1.3 : 1	100 FC	1.7 : 1
Class II	100 FC	1.5 : 1	70 FC	2 : 1
Class III	50 FC	2 : 1	30 FC	2.5 : 1
Class IV	30 FC	2.5 : 1	20 FC	3 : 1

Athletic Field Lighting Control Standards

Light Trespass

Exterior lighting from athletic fields should be selected and arranged such that not more than 0.1 footcandles is allowed to extend beyond property lines.

Glare Control

Exterior lighting fixtures shall include proper shielding and aiming such that excessive brightness is not seen from neighboring properties or along adjacent roadways.

Light Pollution

Exterior lighting fixtures used for the lighting of athletic fields shall be positioned such that the top of the field angle of the selected luminaires is 10 degrees, or greater.

Revised 012010

Appendix Section 3 - Signage

I. Development and Design Standards

The Institutional Master Plan shall establish development and design standards that shall apply to all development proposals and other improvements within the Institutional Zone. These development and design standards will apply to individual projects that are submitted for site plan review. These standards shall foster the development of a visually and architecturally integrated campus that is safe, environmentally sensitive, and that minimizes the adverse impact of the campus on neighboring residential areas. At a minimum, these development and design standards shall address the following areas:

Signage

The standards shall establish a consistent design theme for all campus signs that enhances the visual environment of the campus and shall identify the general design, sizes, and locations for various types of campus signs.

In the IN Zone, the following signs shall be permitted provided that no individual sign shall be larger than thirty-two (32) square feet and that all signs shall be consistent with the design standards set forth in the approved Institutional Master Plan:

(a) *Institution Sign - One (1) sign identifying the institution in the center of the campus or at a key location within the campus. This sign shall be ground mounted, located within a landscape area, or attached to a landscape feature such as a wall, boulder or similar object. An institution sign may be externally lit with a shielded light source.*

(b) *Gateway Signs - One (1) sign identifying the institution located at each principal entrance to the campus from the major road network. Gateway signs shall be ground mounted, located within a landscape area, or attached to a landscape feature such as a wall, boulder or similar object. Gateway signs may be externally lit with a shielded light source.*

(c) *Building and Facility Signs - Each building or facility may be identified by a sign at the principal entrance and at each additional major entrance to the building or facility. Building or facility signs shall be attached to the building or facility or shall be ground mounted or attached to a landscape feature. Building and facility signs may be externally lit with a shielded light source.*

(d) *Directional Signs - Signs providing directions to buildings or facilities may be placed at appropriate locations within the campus in accordance with the sign standards contained in the Institutional Master Plan. Directional signs may be externally lit with a shielded light source.*

(e) *<u>Public Safety and Regulatory Signs</u>* ***-*** *Signs setting forth public safety regulations, parking regulations, or other public informational signs may be placed at appropriate locations within the campus in accordance with the sign standards contained in the Institutional Master Plan. Safety and regulatory signs may be externally lit with a shielded light source.*

(f) *<u>Informational Kiosks</u>* *– Facilities for the posting of temporary notices or campus information such as kiosks and bulletin boards may be placed at appropriate locations within the campus in accordance with the sign standards contained in the Institutional Master Plan. Kiosks and bulletin boards may be externally lit with a shielded light source.*

(g) *<u>Temporary Signs and Banners</u>* *- Temporary signs and banners related to campus events may be placed at appropriate locations within the campus in accordance with the sign standards contained in the Institutional Master Plan provided that such signs and banners do not remain in place for more than ten (10) days."*

UNIVERSITY OF NEW ENGLAND

INNOVATION FOR A HEALTHIER PLANET

Biddeford Campus

Signage Standards

January 31, 2023

BIDDEFORD SIGN TYPE LINE-UP

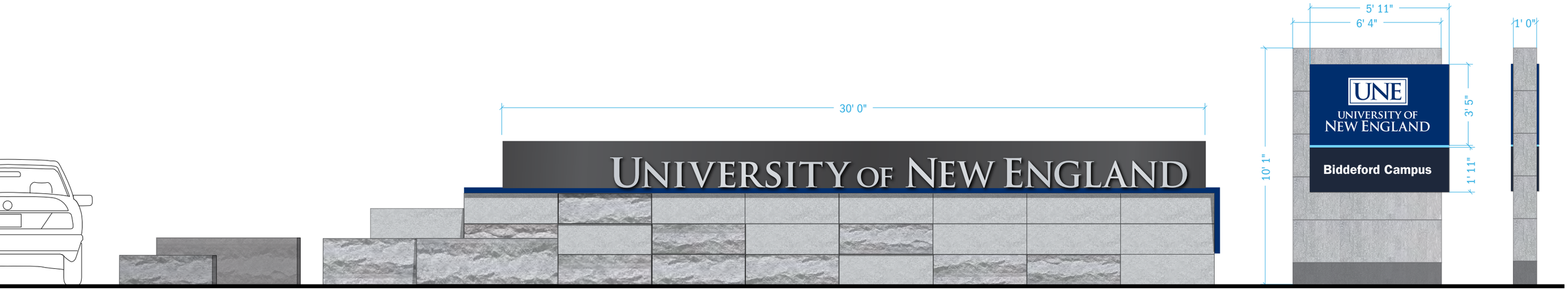

ID1 Primary Campus ID/Entry Sign

ID2 Secondary Campus ID/ Entry Sign

VARIES DECARY HALL

VARIES DECARY HALL

BI1 Primary Building ID, letters

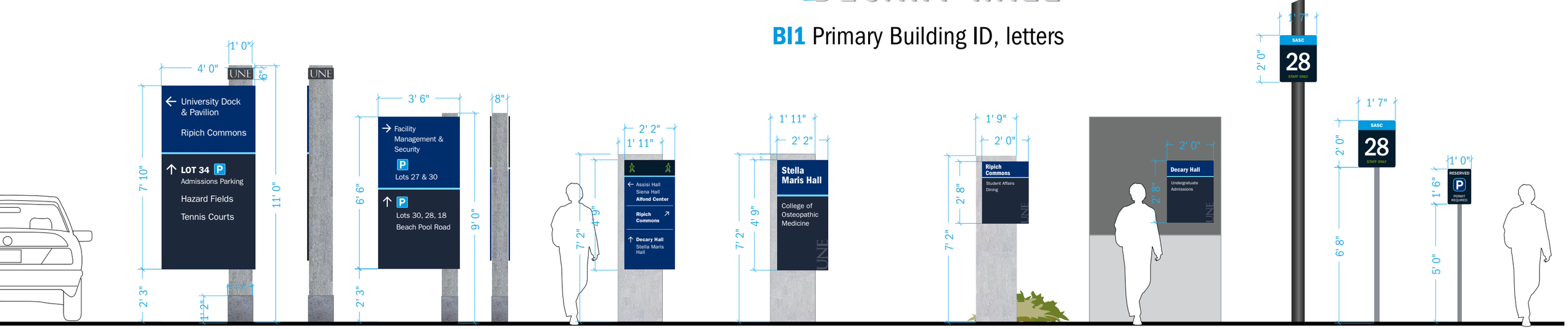

scale: 1/4" = 1'-0"

VD1
Primary Vehicular Directional

VD2
Secondary Vehicular Directional

PD
Pedestrian Directional

BI2
Primary Building ID, freestanding

BD1 **BD2**
Building ID/Directory, freestanding/wall mounted

PL
Parking Lot/space IDs

UNE UNIVERSITY OF NEW ENGLAND
BIDDEFORD CAMPUS

These drawings are not for construction. Designer shall review contractors shop drawings for fabrication. Contractors shall be responsible for verification of all dimensions and field conditions prior to performing work and inform Designer of any discrepancies.

WINTER HOLBEN
Architecture + Design
7 Wallingford Square Unit 209-9 Kittery, ME 03904
O: 207.994.3104 | winterholben.com

DOCUMENT SET
January 31, 2023

ST.L

PRIMARY CAMPUS ID

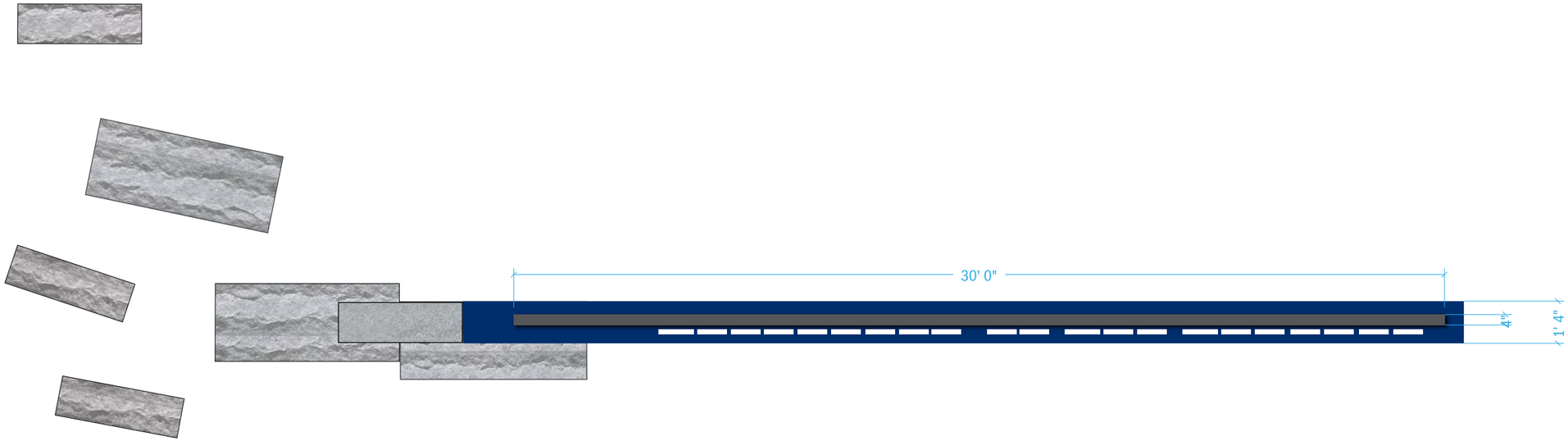

Granite Blocks

1. 4’-0” x 1’-4”, depth 1’-4” honed or thermal finish TBD
2. 4’-0” x 1’-4”, depth 1’-4” rough/rockface finish
3. 6’-0” x 2’-0”, depth 2’-6” rough/rockface finish

- **Base**
  Woodbury Gray Granite
- **Behind Logo**
  TBD

NOTE: granite can be cladding over internal sign cabinet.
All seems need to be shown in fabrication drawings front/rear seams as per elevation. Side elevation can show seam edge.

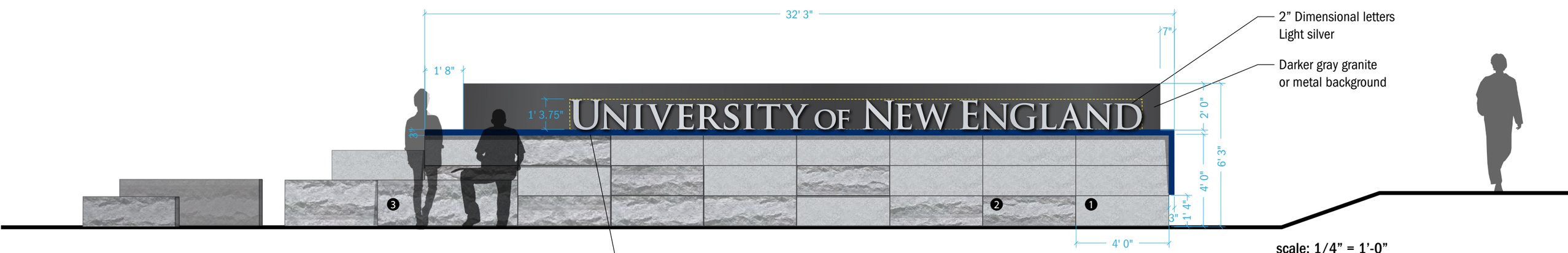

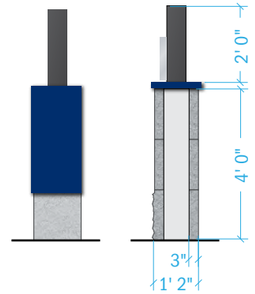

scale: 1/4” = 1’-0”

From code:
10. External illumination. In all zones where externally lit signs are allowed the illumination shall be by steady, stationary, shielded light sources directed solely on the sign in such a manner as to not cause glare for motorists, pedestrians, or neighboring premises.

a. Institution sign: one sign identifying the institution in the center of the campus or at a key location within the campus. This sign shall be ground mounted, located within a landscape area, or attached to a landscape feature such as a wall, boulder or similar object. An institution sign may be externally lit with a shielded light source.

UNE UNIVERSITY OF NEW ENGLAND
BIDDEFORD CAMPUS

These drawings are not for construction. Designer shall review contractors shop drawings for fabrication. Contractors shall be responsible for verification of all dimensions and field conditions prior to performing work and inform Designer of any discrepancies.

WINTER HOLBEN
Architecture + Design
7 Wallingford Square Unit 209-9 Kittery, ME 03904
O: 207.994.3104 | winterholben.com

DOCUMENT SET
January 31, 2023

ID1

SECONDARY CAMPUS ID



Context Image

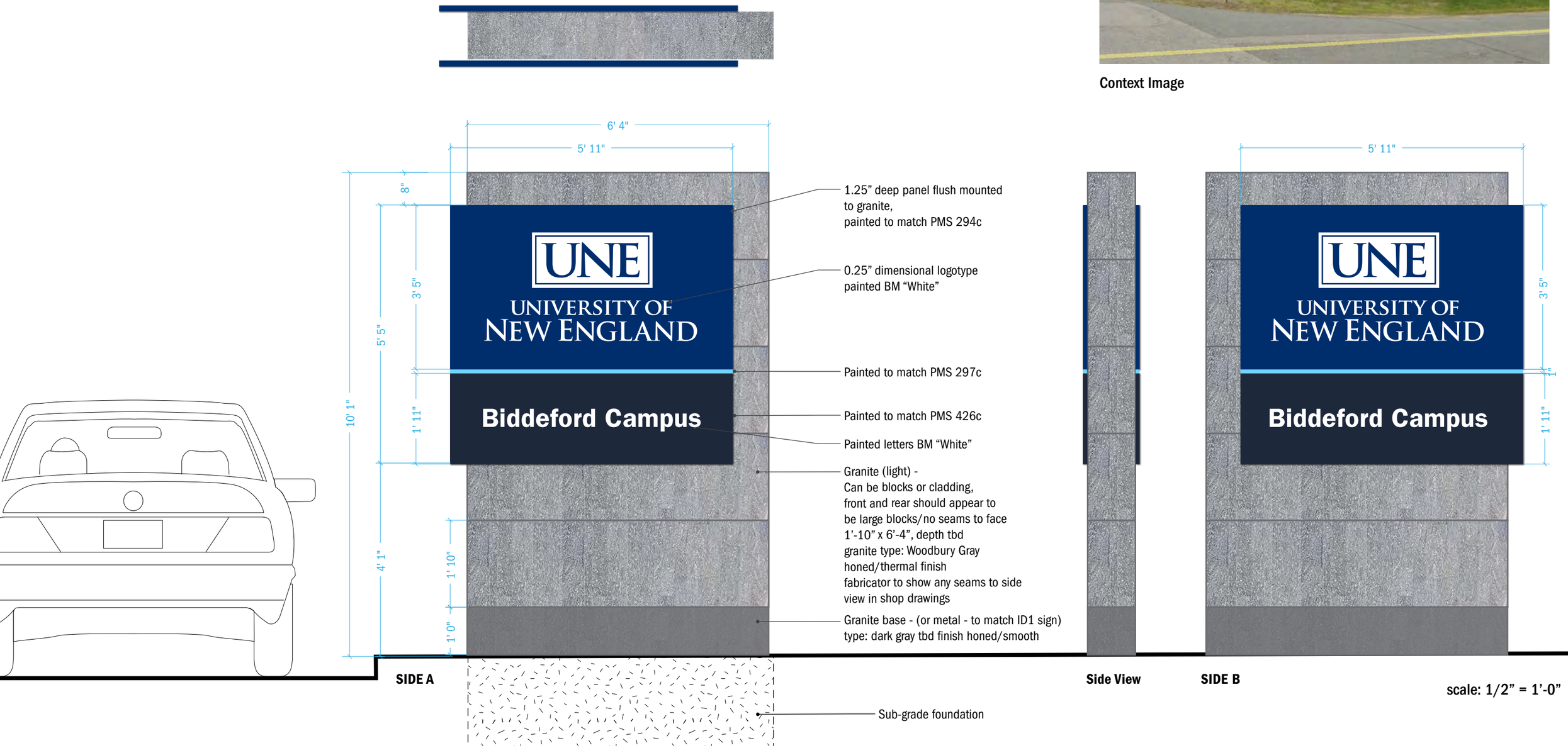

SIDE A

Side View

SIDE B

scale: 1/2” = 1’-0”

UNIVERSITY OF NEW ENGLAND
BIDDEFORD CAMPUS

These drawings are not for construction. Designer shall review contractors shop drawings for fabrication. Contractors shall be responsible for verification of all dimensions and field conditions prior to performing work and inform Designer of any discrepancies.

WINTER HOLBEN
Architecture + Design
7 Wallingford Square Unit 209-9 Kittery, ME 03904
O: 207.994.3104 | winterholben.com

DOCUMENT SET
January 31, 2023

ID2

PRIMARY VEHICULAR DIRECTIONAL

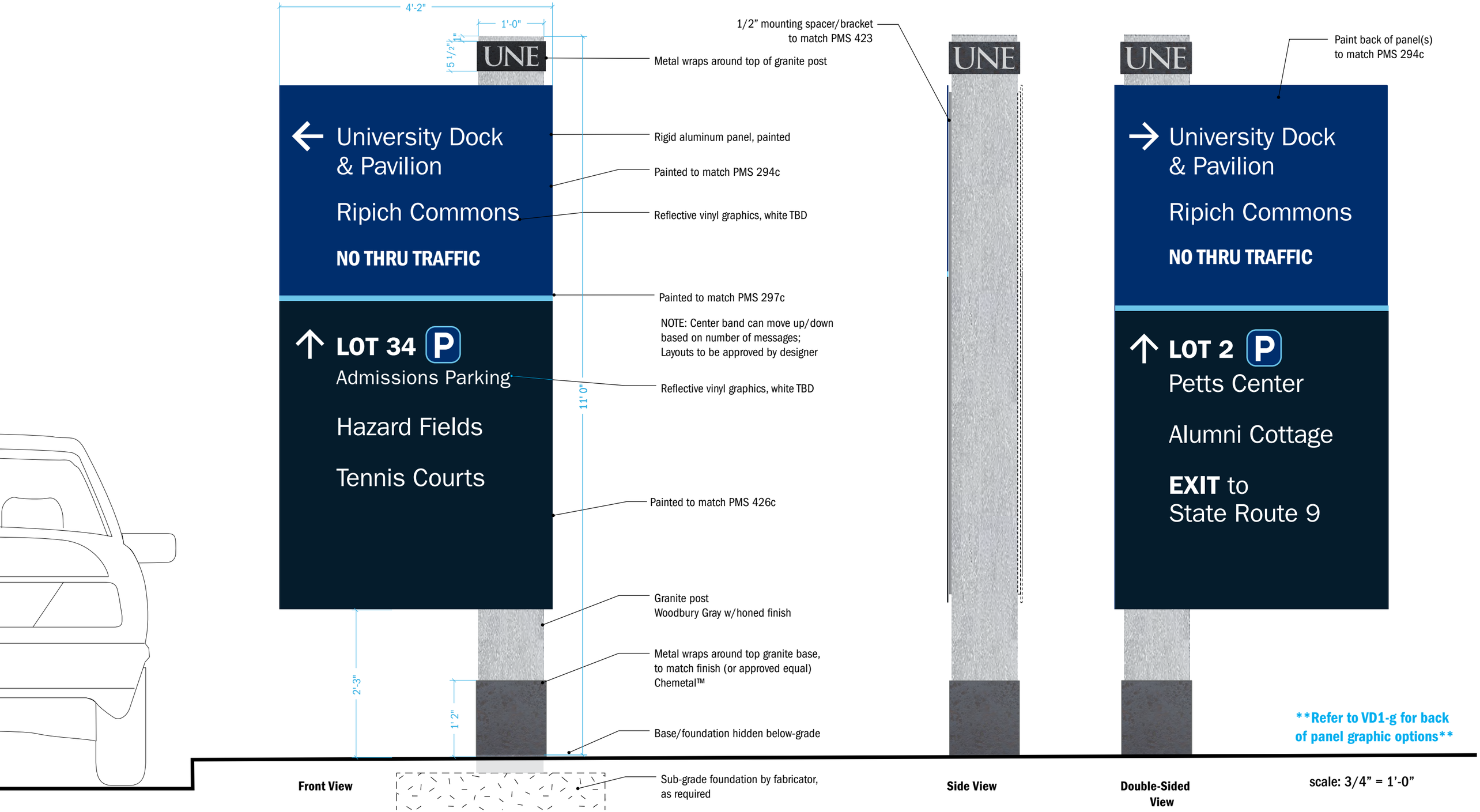

Front View | **Side View** | **Double-Sided View**

Refer to VD1-g for back of panel graphic options

scale: 3/4" = 1'-0"

UNIVERSITY OF NEW ENGLAND
BIDDEFORD CAMPUS

These drawings are not for construction. Designer shall review contractors shop drawings for fabrication. Contractors shall be responsible for verification of all dimensions and field conditions prior to performing work and inform Designer of any discrepancies.

WINTER HOLBEN
Architecture + Design
7 Wallingford Square Unit 209-9 Kittery, ME 03904
O: 207.994.3104 | winterholben.com

DOCUMENT SET
January 31, 2023

VD1.a

SECONDARY VEHICULAR DIRECTIONAL

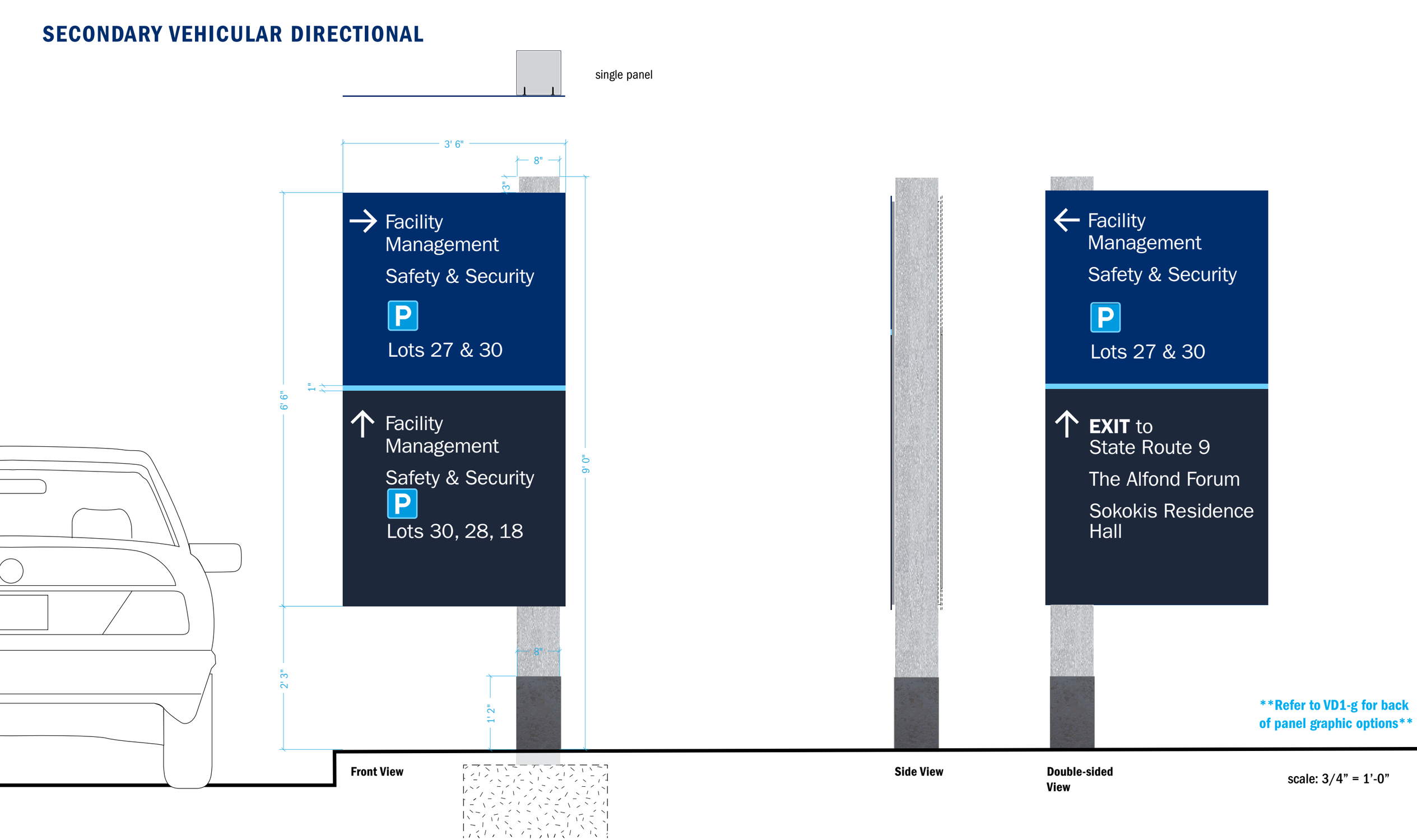

scale: 3/4” = 1’-0”

UNIVERSITY OF NEW ENGLAND
BIDDEFORD CAMPUS

These drawings are not for construction. Designer shall review contractors shop drawings for fabrication. Contractors shall be responsible for verification of all dimensions and field conditions prior to performing work and inform Designer of any discrepancies.

WINTER HOLBEN
Architecture + Design
7 Wallingford Square Unit 209-9 Kittery, ME 03904
O: 207.994.3104 | winterholben.com

DOCUMENT SET
January 31, 2023

VD2

PRIMARY BUILDING IDENTIFICATION

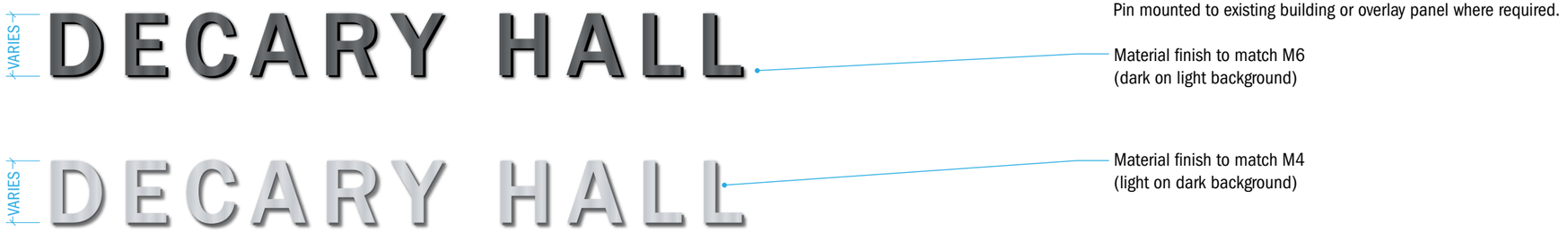

1” dimensional letters, 5”-10“ height letters are custom sized to entrance/placement on building.
Pin mounted to existing building or overlay panel where required.

Material finish to match M6
(dark on light background)

Material finish to match M4
(light on dark background)

ITC Franklin Gothic Std Medium, tracking 150pt

scale: 1/2” = 1’-0”







UNIVERSITY OF NEW ENGLAND
BIDDEFORD CAMPUS

These drawings are not for construction. Designer shall review contractors shop drawings for fabrication. Contractors shall be responsible for verification of all dimensions and field conditions prior to performing work and inform Designer of any discrepancies.

WINTER HOLBEN
Architecture + Design
7 Wallingford Square Unit 209-9 Kittery, ME 03904
O: 207.994.3104 | winterholben.com

DOCUMENT SET
January 31, 2023

BI1

PRIMARY BUILDING ID - FREESTANDING

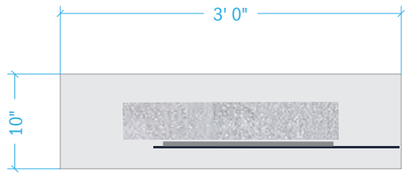

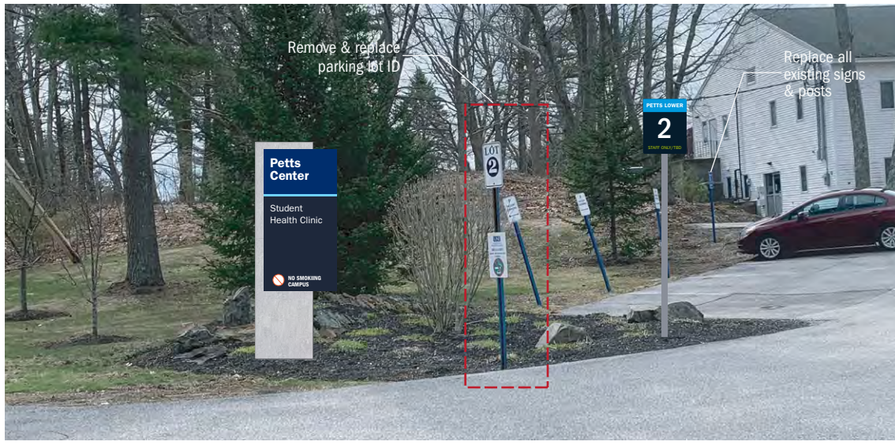

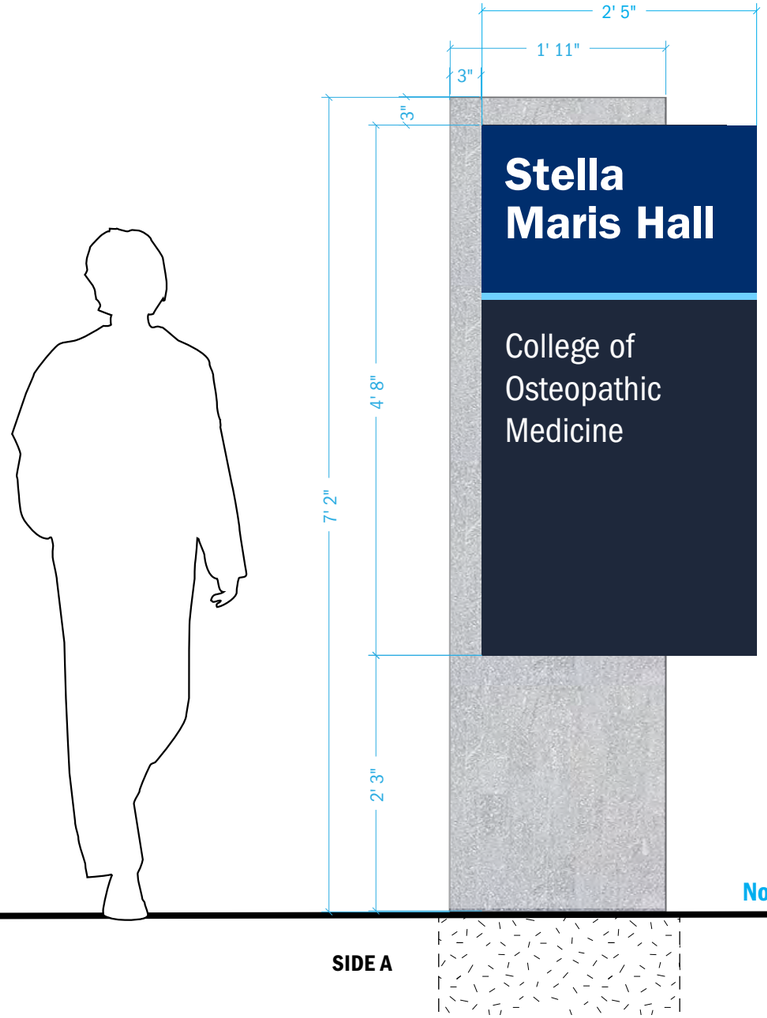

Note: Final panel size TBD





SIDE A | **Side View** | **Back View** | scale: 3/4” = 1’-0”

UNE UNIVERSITY OF NEW ENGLAND
BIDDEFORD CAMPUS

These drawings are not for construction. Designer shall review contractors shop drawings for fabrication. Contractors shall be responsible for verification of all dimensions and field conditions prior to performing work and inform Designer of any discrepancies.

WINTER HOLBEN
Architecture + Design
7 Wallingford Square Unit 209-9 Kittery, ME 03904
O: 207.994.3104 | winterholben.com

DOCUMENT SET
January 31, 2023

BI2

SECONDARY BUILDING ID/DIRECTORY - FREESTANDING

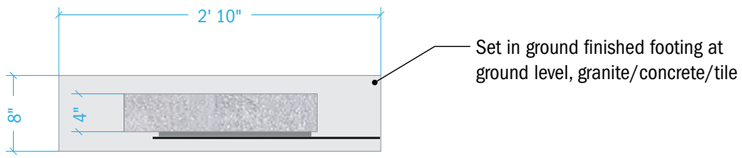

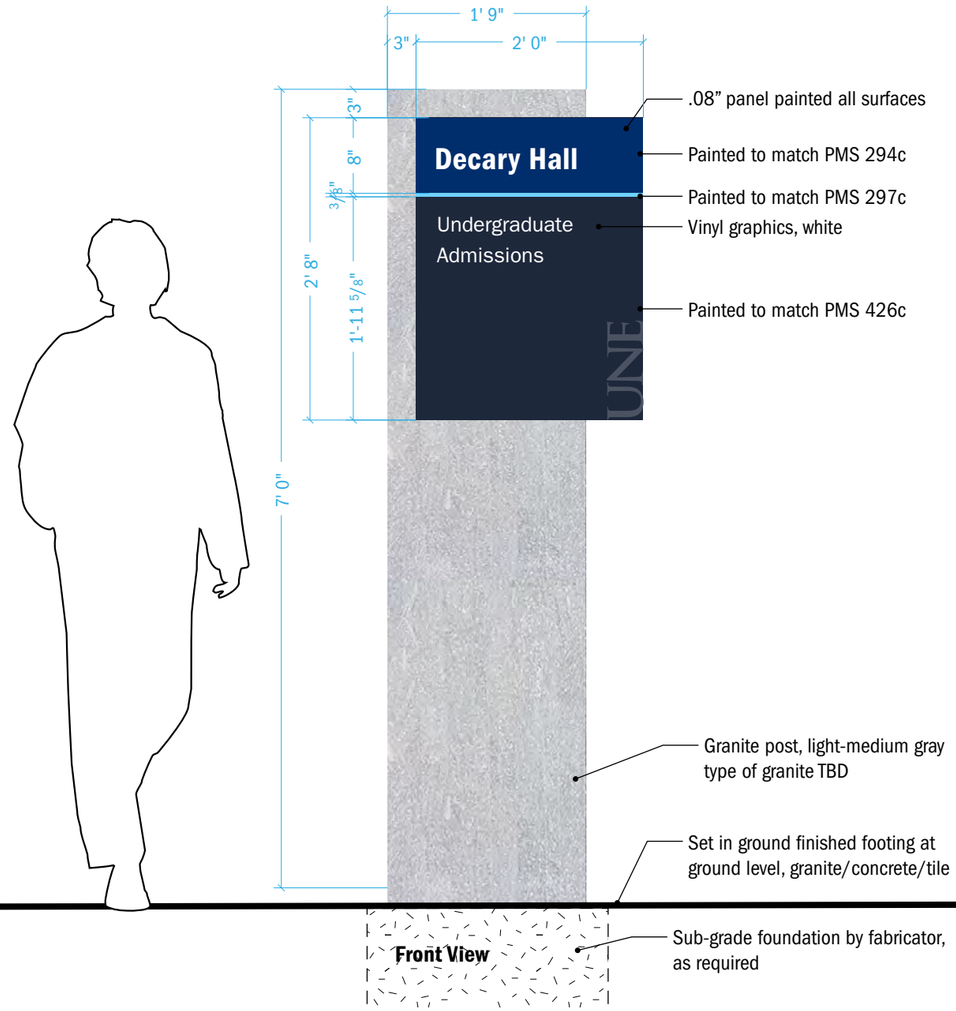

Front View



Side View

Back View

scale: 3/4" = 1'-0"

SECONDARY BUILDING ID/DIRECTORY - WALL MOUNTED

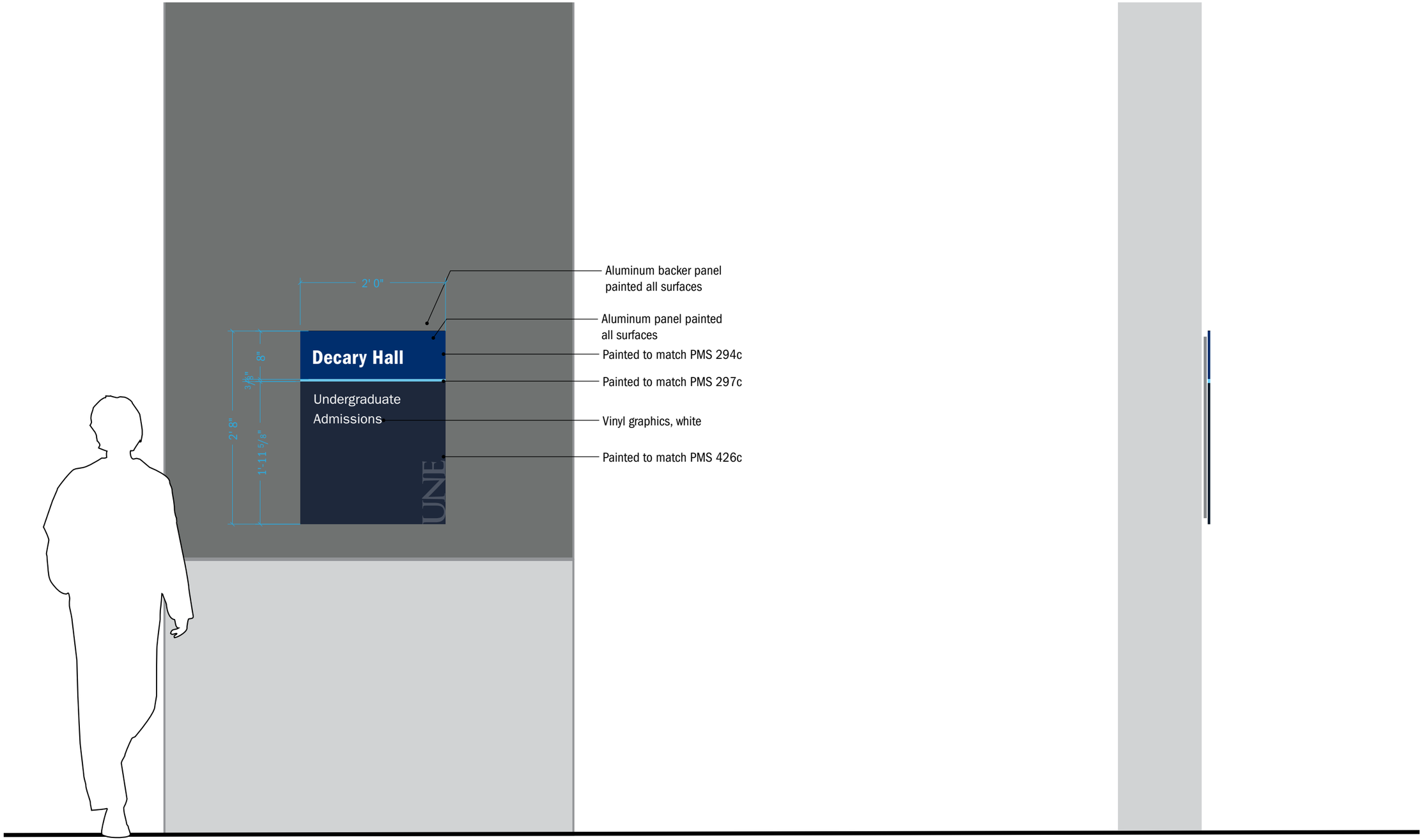

Front View

scale: 3/4” = 1’-0”

UNE UNIVERSITY OF NEW ENGLAND

BIDDEFORD CAMPUS

These drawings are not for construction. Designer shall review contractors shop drawings for fabrication. Contractors shall be responsible for verification of all dimensions and field conditions prior to performing work and inform Designer of any discrepancies.

WINTER HOLBEN
Architecture + Design
7 Wallingford Square Unit 209-9 Kittery, ME 03904
O: 207.994.3104 | winterholben.com

DOCUMENT SET
January 31, 2023

BD2

PEDESTRIAN DIRECTIONAL

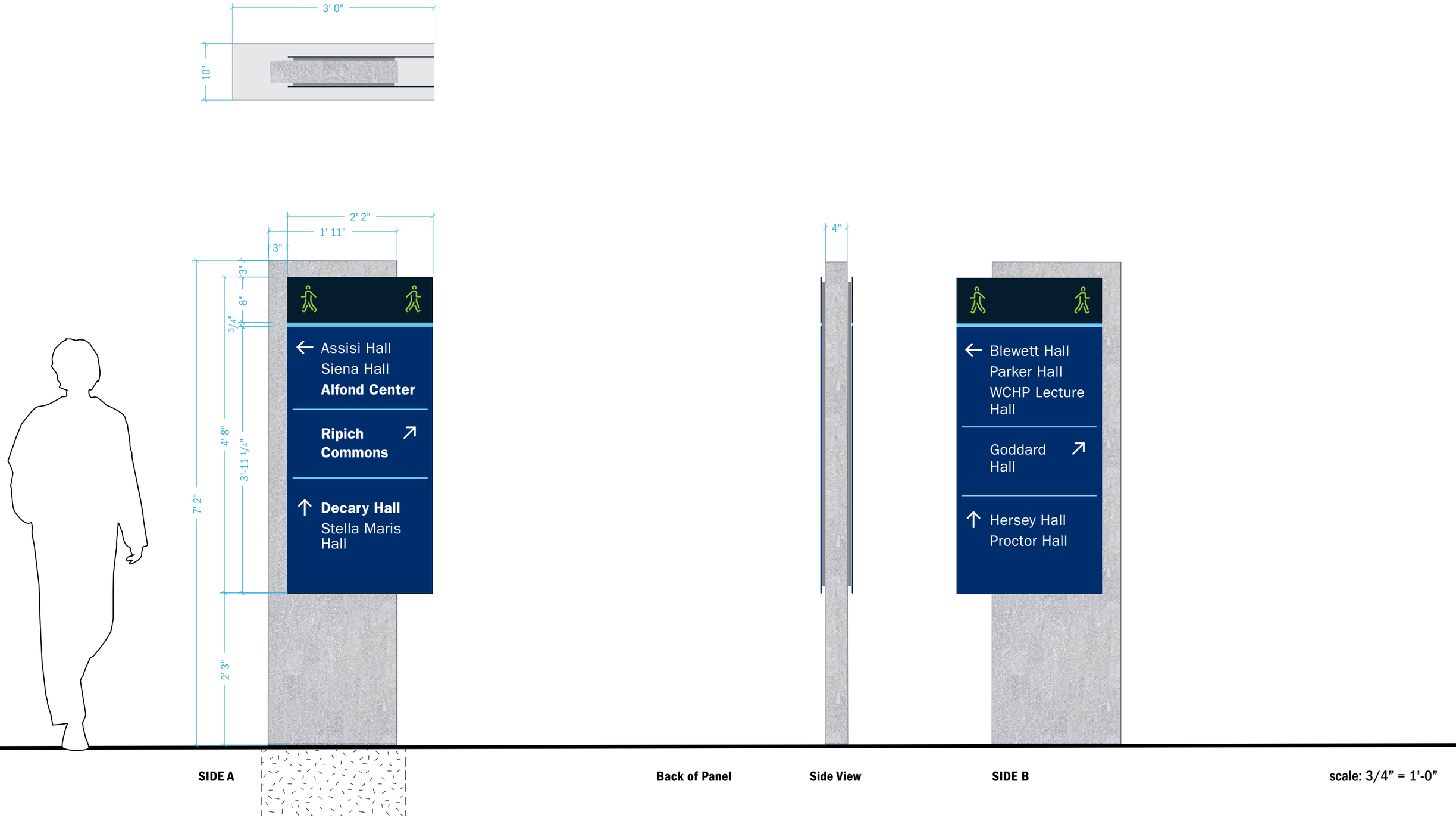

SIDE A | **Back of Panel** | **Side View** | **SIDE B** | scale: 3/4” = 1’-0”

These drawings are not for construction. Designer shall review contractors shop drawings for fabrication. Contractors shall be responsible for verification of all dimensions and field conditions prior to performing work and inform Designer of any discrepancies.

WINTER HOLBEN
Architecture + Design
7 Wallingford Square Unit 209-9 Kittery, ME 03904
O: 207.994.3104 | winterholben.com

DOCUMENT SET
January 31, 2023

PARKING LOT ID

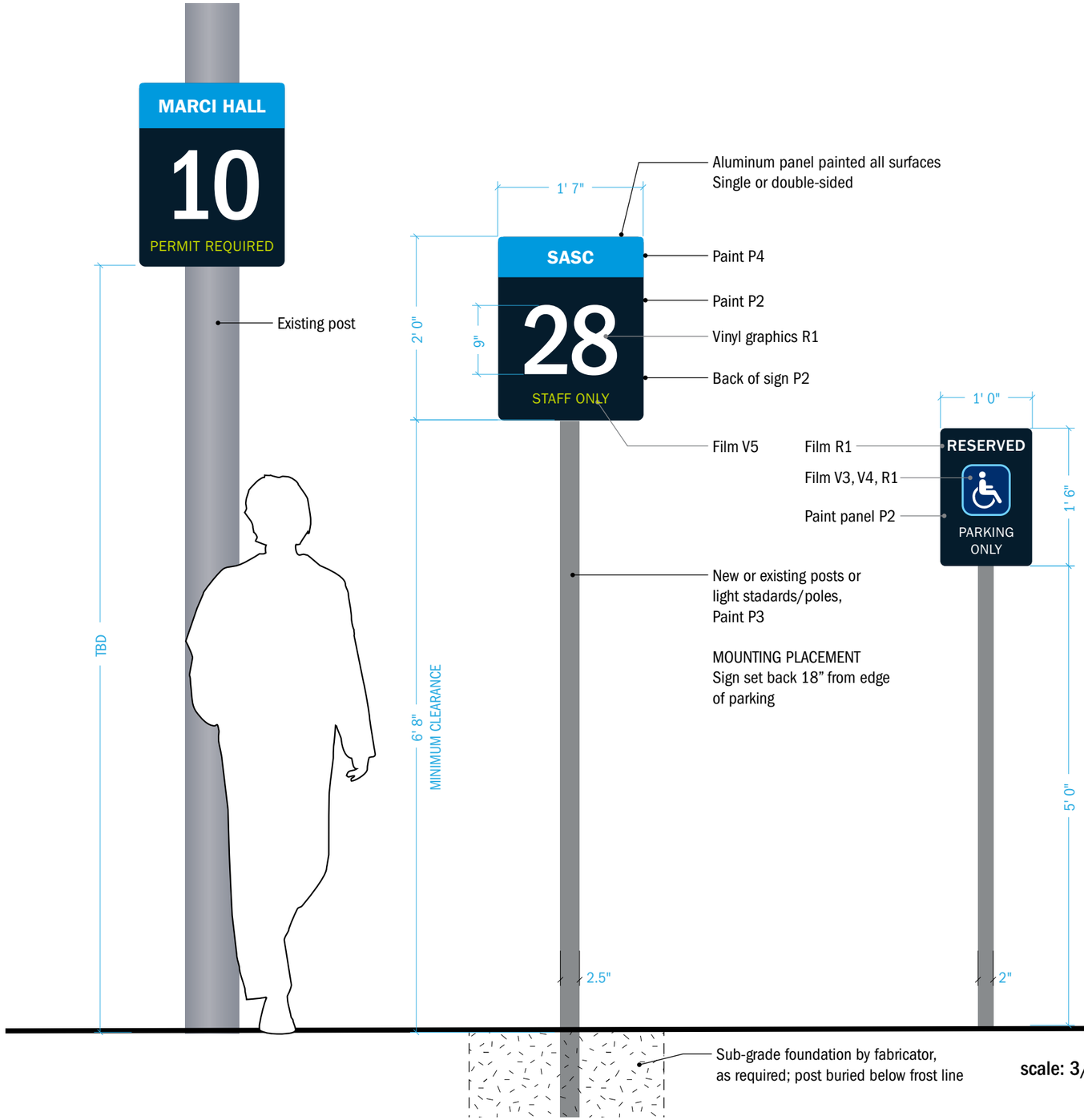

scale: 3/4" = 1'-0"

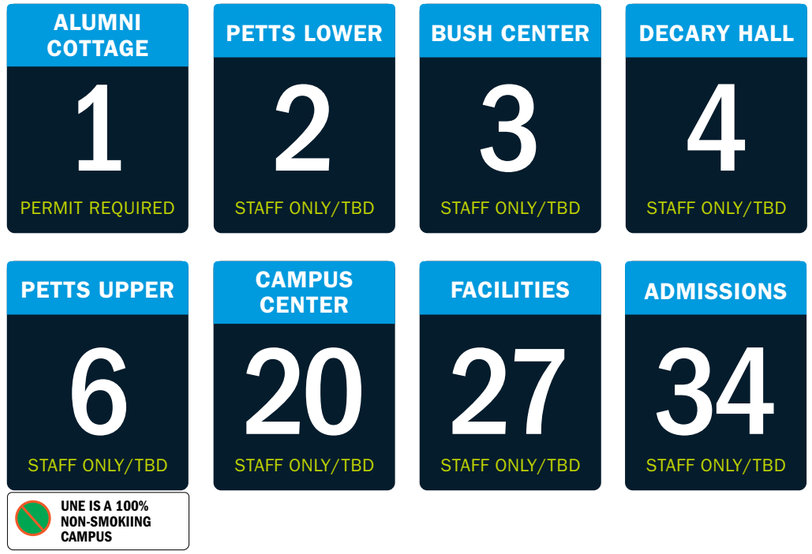



UNE UNIVERSITY OF NEW ENGLAND
BIDDEFORD CAMPUS

These drawings are not for construction. Designer shall review contractors shop drawings for fabrication. Contractors shall be responsible for verification of all dimensions and field conditions prior to performing work and inform Designer of any discrepancies.

WINTER HOLBEN
Architecture + Design
7 Wallingford Square Unit 209-9 Kittery, ME 03904
O: 207.994.3104 | winterholben.com

DOCUMENT SET
January 31, 2023

PID

Appendix Section 4 – Pedestrian and Bicycle Facilities

I. Development and Design Standards

The Institutional Master Plan shall establish development and design standards that shall apply to all development proposals and other improvements within the Institutional Zone. These development and design standards will apply to individual projects that are submitted for site plan review. These standards shall foster the development of a visually and architecturally integrated campus that is safe, environmentally sensitive, and that minimizes the adverse impact of the campus on neighboring residential areas. At a minimum, these development and design standards shall address the following areas:

4. Pedestrian and Bicycle Facilities - The standards shall establish an integrated program for accommodating pedestrians and bicyclists safely while promoting a campus environment that is pedestrian focused. The standards shall identify the types, general location, and typical design of various pedestrian and bicycle facilities.

Pedestrian and Bicycle Facilities

The following standards will be used to accommodate pedestrians and cyclist's safety while promoting a campus environment that is pedestrian focused:

The University provides bike racks at or near the main entrance of academic and residential buildings (see specification sheet on the following page). It is expected that pedestrians and cyclists will share common walkways following the normal "rules of the road" thus avoiding the need for specific bike paths or lanes.

The University also offers a Bike Share program for community members without bicycles. This is a cellphone app based program and members can "rent" a bike for free, to use to get across campus or out into the community.

Pedestrians and all campus visitors have access to exterior emergency phones, which are located in strategic locations throughout the campus (see specification sheet on the following page). These emergency call boxes are easily identifiable by the blue lights located adjacent to them. They allow the users to contact the University Safety and Security Staff at any time. The University provides Safety and Security coverage 24 hours a day, and these highly trained Officers respond to all emergency calls.

In addition to the above information, the University has developed specific standards for pedestrian and cyclist safety which have been incorporated into the University's landscaping (see *Appendix A-Section 1*), exterior lighting (see *Appendix A-Section 2*) and architectural design standards (see *Appendix A-Section 6*).

Emergency Call Box



Model 294AL Wall Mount

- One button call for help.
- Housing: Die-Cast Aluminum.
- Polyurethane finish for enhanced durability.
- Sealed metal keypad ideal for access control or similar local calls. Calls can be limited to avoid toll charges.
- Front panel design maximizes useability, simplifies maintenance, and allows customization.
- Microphone and speaker located for optimal performance.
- Large "Palm" activation button standard on all phones.
- Telephone line powered.
- Remote programming.
- Auto answer.
- Auxiliary output activates peripheral equipment.
- ADA Compliance features standard on all models. Features include Braille Help tag and "Call Received" LED.
- Custom colors and silkscreening available.

S.M.A.R.T. Also available in S.M.A.R.T. 294ALSL

See S.M.A.R.T. info located on page 3

Bike Storage Rack



UNE Bike Share Program



Appendix Section 5 - Noise

I. Development and Design Standards

The Institutional Master Plan shall establish development and design standards that shall apply to all development proposals and other improvements within the Institutional Zone. These development and design standards will apply to individual projects that are submitted for site plan review. These standards shall foster the development of a visually and architecturally integrated campus that is safe, environmentally sensitive, and that minimizes the adverse impact of the campus on neighboring residential areas. At a minimum, these development and design standards shall address the following areas:

5. Noise - The standards shall establish an overall program for minimizing the impact of campus noise on adjacent residential areas. The standards shall identify measures that will be employed to control noise at the source as well as to mitigate the impacts of noise on adjacent property.

Noise

The MDEP and the City have detailed noise regulations. Because Biddeford has a local noise ordinance that is more restrictive than the MDEP regulations, this Master Plan focuses compliance with the City's standard. The City noise ordinance includes the following requirements:

- Excessive noise between 9:00 pm and 7:00 am shall be muffled so as not to be objectionable due to intermittence, beat frequency, shrillness or volume.
- The maximum permissible sound pressure level of any continuance (continuing), regular or frequent source of sound produced activity regulated by this ordinance shall be as established by the time period and type of land use district listed below. Sound pressure levels shall be measured at the lot lines at a height of at least four feet above the ground.

	7:00 a.m.-10:00 p.m.		10:00 p.m.-7:00 a.m.	
	db(A)	db(C)	db(A)	db(C)
Industrial districts	70	82	60	72
Business districts	60	72	50	62
Other districts	55	67	45	57

- No person shall engage in construction activities on a site abutting any residential use between the hours of 9:00 p.m. and 7:00 a.m., which exceed those limits established for residential districts. Otherwise the following activities shall be exempt from these regulations.

1. Noises created by construction and maintenance activities between 7:00 a.m. and 6:00 p.m.
2. The noises of safety signals, warning devices, and emergency pressure relief valves and any other emergency activities.
3. Traffic noise on existing public roads, and railways.

The City noise standards will be adopted as the University's Noise Standard.

As for minimization of existing noise, see section 8 of this report.

Appendix Section 6 – Architectural Design and Details

I. Development and Design Standards

The Institutional Master Plan shall establish development and design standards that shall apply to all development proposals and other improvements within the Institutional Zone. These development and design standards will apply to individual projects that are submitted for site plan review. These standards shall foster the development of a visually and architecturally integrated campus that is safe, environmentally sensitive, and that minimizes the adverse impact of the campus on neighboring residential areas. At a minimum, these development and design standards shall address the following areas:

6. Architectural Design and Details - The standards shall establish an integrated design theme for campus buildings that is harmonious with existing buildings while promoting a high level of design for new buildings. The standards shall address the scale and massing of buildings, appropriate materials and colors, rooflines, locations of building entrances, architectural detailing, and similar features to create a visually attractive campus while minimizing impacts on surrounding residential areas.

Architectural Design and Details

ARCHITECTURAL DESIGN OVERVIEW

Introduction

An educational institution's quality is reflected in its buildings and campuses. To enrich and to provide architectural continuity to both of the University of New England's campuses in Biddeford and Portland, the following Architectural Design Guidelines have been established. These guidelines will preserve and enhance the image of the University's quality, beauty, consistency and permanence.

The University of New England has developed a Master Plan and guidelines to enhance its campuses and help it fulfill its greatest potential. The Master Plan locates potential future building sites within similar use groupings, allows for a fairly dense development of the campuses while creating / reinforcing outdoor spaces, and creates functional linkages with surrounding facilities. The Architectural Design Guidelines are to be used in conjunction with the Master Plan to help reinforce its ideas and give consistency to each campus in order that one would be able to identify buildings at a glance while still allowing for individual design. The Master Plan and the Architectural Design Guidelines incorporate several concepts to give the University a visual identity through building location, mass and consistent use of materials.

The first important step is to hire a qualified architectural and engineering team that is able to deliver a structure within the budget, meet the desirable parameters identified during programming and adhere to the University's established Architectural Design

Guidelines. In order to facilitate these requirements, it is important that the design team be familiar with the campus on which they are working. The design team will need to preserve and enhance the architectural concepts, which serve as the basis for design while meeting the goals of University's Master Plan.

Accessibility

All new building designs and major renovations need to be in accordance with the American with Disabilities Act. The University is committed to making its spaces accessible to the public.

Quality of Material

The American Society for Testing and Materials (ASTM) is recognized as the industry standard for establishing the performance requirements for various building materials. It is recognized that adherence to ASTM standards for design criteria, material performance and construction made available through the various building trade guidelines, will do much to control quality levels while eliminating untested / unproven materials, products and systems from consideration on future projects. No asbestos material is to be used in any facility.

Energy Efficiency

The focus on energy-efficient design will continue to influence the delivery of new and renovated buildings well into the next century. The University has adopted the Maine Energy Code. Whenever economically feasible, new and renovated buildings will be designed with approaches targeting energy conservation and energy efficiency at the LEED Silver Level of certification.

Sustainability

Whenever possible and economically feasible, the University practices sustainable design follows the criteria set forth by the United States Green Building Council.

Life Cycle Costs

Life Cycle Costing (LCC) is a process used to select the most appropriate and durable material based upon the owner's ability to initially purchase it, evaluate the materials' longevity, and its expected maintenance costs. LCC systems principally address mechanical, electrical and plumbing. Analysis of architectural, civil and structural materials is more of a "judgment" call based upon past performance, life, history and/or environmental factors that change from location to location. The University's life cycle expectations are based on a 50-year building.

Scale and Proportion

The concept of scale and proportion is composed of many separate elements, most notably the personal scale, pedestrian orientation of circulation and frequent placement of open spaces and places to congregate on campus. The perceived proportion of both individual and collective buildings needs to be well balanced, with deliberate designer efforts to avoid architectural competition between neighboring exterior elevations. The Architectural Design Guidelines offer some well-known aids to create and reinforce the concept of human scale on any new building or addition.

Graphics and Signage

The University currently has a comprehensive and consistent interior/exterior signage system on campus. Please see Appendix Section 3. All signs need to comply with ADA Guidelines.

Safety Standards

The safety standards identified in the Architectural Design Guidelines reflect the most recent safety guidelines established for materials and building systems. They also recognize and reference the importance of adhering to building code requirements in the design and construction of campus facilities.

Building Siting and Linkages

The Master Plan identifies potential building sites and maintained open areas. The design team should follow Architectural Design Guidelines to reinforce the University's Master Plan while creating a cohesive campus. Access for emergency and maintenance vehicles, ADA issues, the relationship of new facilities with respect to adjacent facilities and the surrounding natural environment must all be considered and maintained by the individual design teams.

Building sites should carefully maintain the concept of the Master Plan and work to maintain a relationship to existing buildings, as well as, creating systems of pedestrian pathways, which are a part of the University

Temporary Buildings

Temporary buildings are defined as structures that provide program support space in anticipation of the construction of new buildings. Temporary structures should be sited so as to minimize view from public streets, to the extent reasonably practical.

Lightning Protection

A UL Master Label lightning protection system will be installed when practical or whenever economically feasible,

ARCHITECTURAL DESIGN GUIDELINES

The Architectural Design Guidelines (ADG) were developed to address the following requirements and needs of the University of New England. These guidelines are intended to provide general guidance and direction and are not intended to supersede any local, state, or federal codes. It is the architect's responsibility to comply with all applicable codes.

1. Building Siting:

The first consideration in building design is the building siting including locations for entrances. While each building will have a primary entrance(s), all entrances should consider connections with neighboring buildings, the orientation to views and protection from inclement weather. The University requires coordination with its Master Plan and a site matrix analysis for new building sites.

- ❑ Building Linkages: New structures should respond to connections to existing buildings and to paths. Ideally, buildings serving the needs of similar departments or colleges should be located in close proximity to one another with paths linking them to reinforce the concept of the pedestrian campus.
- ❑ Enhance Pedestrian Activity Areas: Main entrances of new buildings should be oriented toward pedestrian-oriented activity areas including parking areas to facilitate safe and barrier free access.
- ❑ Out door spaces: Buildings should reinforce the existing exterior space.
- ❑ Respect Pedestrian Circulation Routes: New buildings should be sited to provide convenient connections for pedestrians. As much as possible, buildings should not be located in such a way as to block pedestrian corridors or compromise the ability to provide safe pedestrian corridors.
- ❑ Orient Buildings to Take Advantage of Views: Ideally, buildings should be sited to take advantage of views.
- ❑ Consider Placement of Parking Garages: Parking garages should not detract from the overall visual quality of the campus. As much as possible, garages should be visually incorporated as part of a

mixed-use facility, or sited to help diminish their visual impact from a public way.

- ❑ Utility Lines, Connections and Ancillary Equipment: Utility connections, including electric and tele-communications, should be located underground. Ideally, the location of transformers or meters should not be placed on exterior power poles or hung on the outside of a new building located in highly visible locations. Preferably, transformers, pump stations and other utility structures should be placed at grade and screened from view.
- ❑ Location of Utilities: The University requires a site matrix analysis for new building sites that includes the availability and proximity of utilities. Potential structure locations may not be feasible due to their distance from existing utilities.
- ❑ Service and Material Storage Areas: Ideally, service and material storage areas should be located at the side or rear of buildings in order to be screened from public view. Consideration for the movement of traffic, access to drives and parking areas should be evaluated.
- ❑ Loading Docks: Loading docks, where required, should, if practical, be recessed entirely within the building or appropriately screened.
- ❑ Existing Trees: Existing trees and existing tree canopy that have either historical or sentimental importance to the campus should be respected whenever possible.
- ❑ Topography: The site selection matrix requires the designer to evaluate the local topography of a site including the presence of ledge. In some cases, it will not be feasible to build on existing topography, while other locations may be suited for taking advantage of topography to enhance the building and allow two different levels of entrance.
- ❑ Soils and Wetland Constraints: Soil and Wetland conditions need to be assessed for every building site in order to comply with State and Local regulations. Under the Maine Natural Resources Protection Act there are provisions that permit the mitigation of wetlands by preserving or mitigating other lands.
- ❑ Site Features: There are many existing natural and manmade site features including existing open space that should be retained or reinforced by new structures, if possible, without comprising functional sites that are essential to programs.
- ❑ Snow Removal Areas: Care needs to be taken with the design to allow for easy snow removal and adequate space must be provided for the containment of excess snow.

2. Materials:

The materials standards are created to help designers choose acceptable materials for any new or renovated building as they relate to adjacent buildings. In its assessment of any materials the design team will consider the durability, maintainability, and uniformity to the adjacent structures.

- ❑ Color and Texture: A material's color and texture can affect a person's perception of a building or of a working environment. Care should be used when selecting finishes to aid in the person's interaction with the space. Colors should also be used to denote similar uses and enhance entries and special features.
- ❑ Detailing: All new or renovated building exteriors should relate to neighboring buildings in the level of detailing while considering current materials and technologies. Detailing may include brick pilasters, high water lines, dentils, and window trim. The following decorative elements should be incorporated where appropriate: brickwork patterning, coursing, window opening and entry rhythms, as well as medallions and reliefs.
- ❑ Durability: Materials exposed to weather, harsh cleaning, and traffic must be given special consideration and need to be detailed carefully. The design team should review the potential for fading or bleaching by UV exposure and salt air, resistance to acid rain, runoff from staining or corrosive materials, contraction/expansion, as well as vehicular, and pedestrian traffic.
- ❑ Maintenance and Cleaning: Consideration should be given where possible to the maintenance and cleaning of materials and fixtures incorporated in a design. For example, wall hung toilets and minimal horizontal surfaces make cleaning more efficient for janitorial staff.
- ❑ Materials should remain honest. There are many imitations of various materials. The substitution of materials must be disclosed and supported by a cost benefit analysis showing the rationale for a diminution of quality and substance.
- ❑ Energy Efficiency: Lighter, more reflective materials can reduce the heat load of the building. Additionally, lighter colored materials can be used in association with light shelves to bring indirect day lighting into the interior of the building, thereby reducing lighting loads.
- ❑ Lights: New or renovated buildings should have adequate exterior lighting to insure that entrances and surrounding areas are safe. See campus lighting standards.
- ❑ Standardized interior materials: Standardize interior materials with those that are currently used throughout the campus.

3. Massing:

While each building has its own functional program demands, it must also be sensitive to its neighboring context. Massing, fenestration and entries should be used to create interest and shall be sympathetic to adjoining structures. Building mass should be articulated both horizontally and vertically as much as possible. Fenestration and detailing should emphasize human scale and help to define the use and levels of the building.

- ❑ Massing: Building mass should have a 'base', 'building' and 'top'. The scale of materials usually diminishes as it is used at each of these points. Changes in material, coursing and fenestration help to define various levels of buildings. Cornices, roof forms, parapets, gables and crenellation add interest to building tops by drawing the eye upward.
- ❑ Proportion: New projects, in context with existing buildings, should strive to improve the relationship of fenestration, facades, coursing lines and materials. Buildings and other exterior elements should be scaled and proportioned to human dimension to help to impart a sense of comfort and well-being.
- ❑ Height: Where heights are much different than the context, care should be taken to match important horizontal building elements as bases, fenestration, cornices and parapet lines. On the University Campus the maximum allowable heights of buildings start at thirty-five feet on the perimeter and get taller towards the center and must meet the conditions of the City of Biddeford's Institutional Zone. Any future buildings should also take into consideration the scale of adjacent buildings.
- ❑ Roofs: Unless justified by a cost analysis, roofs should be sheathed with forty-year asphalt shingles, EPDM, slate or approved metal roofing.
- ❑ Spaces Characteristics: The relationships and the character of spaces should begin from the exterior and move to the interior with similar spaces flowing into each other. The exterior of a building should allude to interior spaces by reinforcing building functions on the facades. Most inhabited spaces should have natural light. Windows are preferred but in some cases, skylights can be substituted. As much as possible, formal and shared spaces should have windows that look out on the nicer local features and not at the back of other buildings or parking lots. There should be a hierarchy of spaces that should begin at the entrance and flow down hallways to any space. Formal and informal meeting spaces should be sited in quiet contemplative locations.

- ❑ Mechanical equipment: As much a practical or economically feasible, equipment on roofs should be hidden from view from the ground by centering on the roof or hidden by canted parapets or screening as appropriate. Exhaust stacks should be minimized consistent with safety requirements and integrated into the architecture.
- ❑ Façade Treatment: Due to the very public nature of most campus buildings, it is important to give the same quality of design effort to all of a project's facades. There should not be a 'rear' elevation per se. New projects should also endeavor to invite the public into the University at all major entrances of the building.
- ❑ Lighting: All new exterior lighting should comply with University of New England's Exterior Lighting Standards.
- ❑ Public Safety: Public spaces should be designed to facilitate building evacuation and maximize accessibility by fire, police and other emergency personnel and equipment. Consideration needs to be made for emergency equipment such as emergency phones.
- ❑ Security: All design concepts should be directed to keeping people easily observable. To do this, any structure or feature should not limit visibility of people, parking areas and building entrances, doors and windows should look out on to paths and parking areas; pedestrian-friendly sidewalks and streets; the provision for emergency call boxes: and finally, all these spaces require adequate nighttime lighting.
- ❑ Sight Distance: New construction should not be located in areas that will obstruct sight distance clear zones essential for safe vehicular and pedestrian movement. Landscaping and entrance signage should be setback and kept clear of these zones especially at intersections.

4. **Sustainable Design:**

Whenever possible and economically feasible, the University practices Sustainable Design by Reduce Reuse Recycle. The design team should consider: energy efficiency, the removal and replacement of trees, and the use of materials that conserve natural resources during their production and usage. The guidelines also encourage the incorporation of the building siting with respect to the orientation to the sun, wind and the coast to minimize energy use. The University, where possible, follows the criteria set forth by the United States Green Building Council (USGBC).

- ❑ Sustainable Materials: Materials should be chosen for their value in energy cost savings and renewable ability.

- ❑ Orientation: Building orientation, when it can, should be done in such a way as to make the most out of the site in order to gain solar benefits while also considering other issues such as building and pathway relationships etc.
- ❑ Building Envelope: A tight building envelope allows for increased energy efficiency and thereby decreases the impact on the environment.
- ❑ Proper Insulation: Maintain a standard set of R-values to prevent energy loss and meet Maine energy codes.
- ❑ Recycle Materials: Whenever possible or economically feasible, existing materials should be recycled or reused within the renovation.

5. External circulation:

Internal circulation needs to be coordinated with external access and egress points in order that main entrances to buildings relate to the campus Master Plan.

- ❑ Vehicular Circulation and Access: When possible coordinate vehicular access points to individual building sites with existing or proposed median breaks and/or curb cuts on the opposite side of the roadway. Shared access drives between adjacent sites are encouraged.
- ❑ Drop-Off Zones and Parking: Drop- off zone and parking should be located near main entrances.
- ❑ Parking: Parking areas should be arranged in a logical, efficient manner to minimize the land area dedicated to parking.
- ❑ Curbs and Pavement: All driveways, surface parking and other vehicular use areas should be paved in asphalt concrete in conformance with the University's Construction Standards. Care should be given in the design and layout of curbs to facilitate snow removal.
- ❑ Dimensions and Striping: Parking lot dimensions will meet local code.
- ❑ Handicap Parking: All parking lots must conform to federal handicapped accessibility requirements (ADA) Standards. Slopes in the handicap spaces should be 2% maximum in all directions. All handicap spaces must have adequate signage. Handicap spaces should be located near accessible entrances in renovated buildings and the main entrance on new structures.

- ❑ Parking Structures: The development of parking structures may be necessary as part of campus growth and should be carefully assessed as to impact, land ordinances and safety. Where proposed, special attention should be given to the exterior design and scale of the structure so that it is compatible with the surrounding context area. Screening at the perimeter of the structure should be provided for buffering and minimization of the visual impact on the landscape.
- ❑ Outdoor Uses: Outdoor spaces include intercollegiate sports, intramural sports, picnic areas, etc. Such areas should be located in areas relatively free of conflicting activities such as deliveries, service areas, major access routes and vehicular use areas.
- ❑ Outdoor Spaces: Building designs should strive to include a variety of open spaces and activities ranging from small intimate courtyards for contemplative study to open lawn areas for informal recreation and outdoor classes. Where applicable, provision should be made during the programming and conceptual design of new facilities to provide opportunities for outdoor use of open space as part of the site and for integration within the larger open space/conservation network.
- ❑ Natural features: A variety of natural features ranging from conservation areas, passive open space and vegetative areas should be retained as much as practicable on any future development site. Federal and State law currently protects many such areas and encroachment is highly regulated. In the case of jurisdictional wetlands and the Saco River, a setback buffer area is required around these areas. Site criteria for proposed new construction should provide early assessments to minimize potential impact and unnecessary work.

7. **Buffering:**

Various methods of separation may be used to foster compatibility between differing land and building uses within the campus as well as on the perimeter to form separation from the neighbors.

- ❑ Visual Separation: Maintain visual separation from neighbors and roadways by means of landscaping and topography.
- ❑ Tree Removal: Existing trees and existing tree canopy that have either historical or sentimental importance to the campuses should be respected whenever possible. For more information about which trees need to be preserved, see facilities management. Tree removal must be disclosed as part of any site evaluation process.

- ❑ Physical Separation: Maintain physical separation, where possible, between non-compatible buildings or areas.
- ❑ Screening of Service and Utility Areas and Waste Containers: Service areas and waste container locations should be located out of public view and in an inconspicuous but accessible location.

Architectural Design and Details

EXISTING CHARACTER/REQUIRED CHARACTER

The Architectural Design Guidelines for the color and texture of new and renovated / expanded facilities have been established to provide continuity between the new and existing facilities. In addition to providing aesthetic harmony in the campus' appearance, this approach allows more cost-efficient maintenance of all University facilities. The recommended guidelines for materials are included within the Architectural Design Guidelines.

Characteristics to strive for:

- ❑ Safe and healthy buildings for the users.
- ❑ Comfortable building for the users.
- ❑ Durable buildings both in details and materials.
- ❑ Ease in maintaining buildings and facilities.
- ❑ Resource efficient including energy, water, materials and capital.
- ❑ Adaptable use (includes chases from the lowest floor to the highest floor and adequate ceiling space for future electrical or mechanical upgrades).
- ❑ User friendly spaces / buildings from faculty, staff and students
- ❑ Buildings should support the academic and ancillary functions that dwell within and allude to such functions on the exterior.
- ❑ Natural lighting at all occupied spaces.
- ❑ Produce buildings that people love and they will take care of them.
- ❑ Meet ADA guidelines.
- ❑ Use ASTM approved materials.
- ❑ Provide safe and friendly outdoor space.
- ❑ Foster the living/learning committee approach throughout the campus to encourage interaction between residential and commuting students, faculty, and staff.

Existing Character – University Campus

The current campus is a mix of building types and materials. Not all current buildings on campus are in keeping with the intentions of the Master Plan buildings and they do not provide as timeless a look or have historical precedent. Many of these building should not be emulated. The character of the main campus can be generalized in the following way:

Site:

- ❑ Major public road through campus.
- ❑ Asphalt paths.
- ❑ Woodland landscape - shaded areas and shade perennials.

Building Characteristics:

- ❑ Brick buildings with lead coated copper accents.
- ❑ Aluminum windows.
- ❑ Flat roofs prevalent.

User:

- ❑ Predominantly residential campus.

Desired Character - University Campus

The following are goals to strive for in order to enrich the existing campus.

Site:

- ❑ Provide spaces within the landscape to promote gathering.
- ❑ The "heart of the campus" needs to be created as illustrated in the Master Plan and then maintained.
- ❑ The paths should be asphalt, masonry, or asphalt with masonry accents with concrete or masonry pads at all doors.
- ❑ Perennial gardens, with seating nodes throughout the campus when practical or economically feasible
- ❑ Exterior benches and seating.

Buildings:

- ❑ Exterior building materials should be compatible/complimentary to adjacent buildings.
- ❑ Shingle, slate, or metal roofing is encouraged.
- ❑ Peaked roofs with gable ends are preferred when appropriate to surrounding buildings and existing adjacent architecture. Provide canopies or snow guards at entrances and near pathways.
- ❑ All equipment should be out of sight or as inconspicuous as possible.

- ❑ When brick is selected as exterior treatment for an addition, Brick should match existing.
- ❑ Coated Copper accents are preferred.
- ❑ Granite, pre-cast concrete, cementitious composite panels, or architectural rubbed concrete should be used at the base of buildings.

Materials:

Major Approved Materials

- EIFS - accents should be at 8'-0" or above.
- Granite, pre-cast concrete, cementitious composite panels, or architectural rubbed concrete,
- Aluminum or fiberglass windows with finish-

Minor Approved Materials

- Lead-coated Copper
- Spandrel glass.
- Concrete with either architectural rubbed surface or coating / split-face CMU in limited quantities and in less prominent places.
- Painted exposed steel

Restricted Materials - Requiring Approval from the University

- Vinyl siding.
- Large quantities of cement block.

Appendix Section 7 – Protection of Scenic Views

I. Development and Design Standards

The Institutional Master Plan shall establish development and design standards that shall apply to all development proposals and other improvements within the Institutional Zone. These development and design standards will apply to individual projects that are submitted for site plan review. These standards shall foster the development of a visually and architecturally integrated campus that is safe, environmentally sensitive, and that minimizes the adverse impact of the campus on neighboring residential areas. At a minimum, these development and design standards shall address the following areas:

7. Protection of Identified Scenic Views - The standards shall establish a standard approach for protecting scenic views within or from the campus that have been formally identified and approved by the City Council.

Protection of Identified Scenic Views

The basic scenic view values are already addressed through a comprehensive array of state, regional and City land use protections. Therefore, this Master Plan process and the guiding framework of the City's Institutional Zone Ordinance, have required careful consideration of scenic view values throughout our Master Plan process.

The University must work within the confines of several laws and regulations that are fully protective of scenic values in fashioning its Master Plan:

State of Maine Site Location of Development Act, 38 MRSA section 484(3) and implementing regulations DEP Regulations Chapter 375(14) (providing that a proposed development may not have an unreasonable adverse effect on the scenic character of the surrounding area).

State of Maine Shoreland Protection Act, 38 MRSA section 435 "Shoreland Areas" and City of Biddeford implementing Shoreland Zoning Ordinance (providing for conservation of shore cover and visual access to inland and coastal waters in shoreland areas within 250 feet of the Saco River).

Saco River Corridor Commission law, 38 MRSA section 954, and implementing regulations (protecting against despoliation of scenic areas in the Saco River Corridor, an area extending at least 500 feet from the Saco River).

City of Biddeford Institutional Zone, creating “No Build” Zones within UNE campus, and requiring creation of a Master Plan incorporating a number of development and design standards, including: landscaping; exterior lighting; architectural design standards; and scenic view standards. Some performance standards, such as landscaping, even require that the Master Plan detail how landscaping will enhance the visual environment of the campus.

In response, this Master Plan encompasses the protection of scenic view values in its Architectural Design and Landscape designs standards.

APPENDIX B

UNIVERSITY OF NEW ENGLAND
INSTITUTIONAL ZONE
MASTER PLAN SUBMISSION
2023-2027

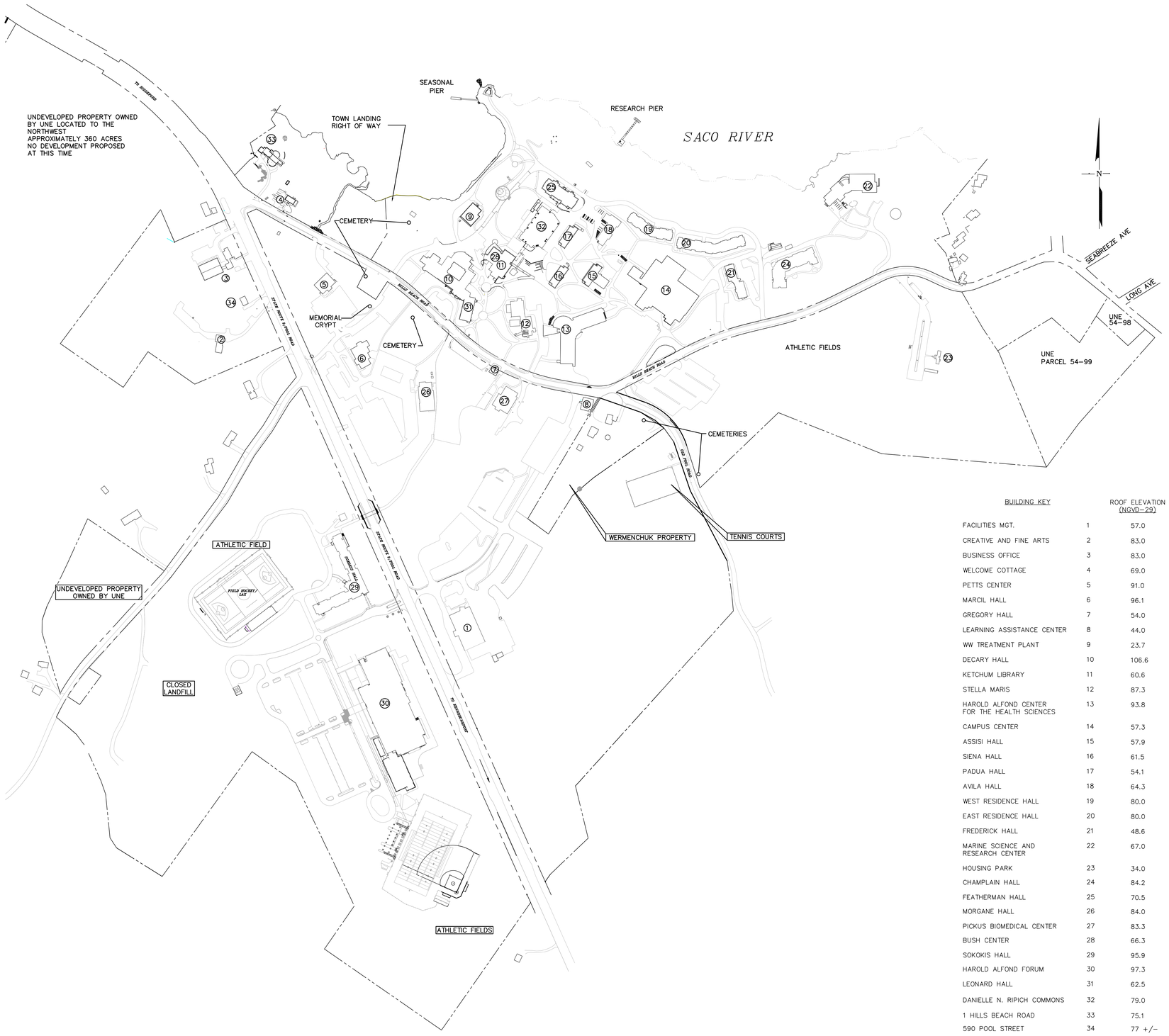

BUILDING KEY		ROOF ELEVATION (NGVD-29)	BUILDING HEIGHT (PER ORDINANCE DEFINITION)
FACILITIES MGT.	1	57.0	18.0
CREATIVE AND FINE ARTS	2	83.0	22.0
BUSINESS OFFICE	3	83.0	18.3
WELCOME COTTAGE	4	69.0	16.0
PETTS CENTER	5	91.0	27.5
MARCIL HALL	6	96.1	40.0
GREGORY HALL	7	54.0	16.0
LEARNING ASSISTANCE CENTER	8	44.0	14.0
WW TREATMENT PLANT	9	23.7	9.6
DECARY HALL	10	106.6	69.4
KETCHUM LIBRARY	11	60.6	30.4
STELLA MARIS	12	87.3	36.9
HAROLD ALFOND CENTER FOR THE HEALTH SCIENCES	13	93.8	55.3
CAMPUS CENTER	14	57.3	34.4
ASSISI HALL	15	57.9	31.2
SIENA HALL	16	61.5	30.8
PADUA HALL	17	54.1	30.4
AVILA HALL	18	64.3	40.1
WEST RESIDENCE HALL	19	80.0	47.0
EAST RESIDENCE HALL	20	80.0	47.0
FREDERICK HALL	21	48.6	23.2
MARINE SCIENCE AND RESEARCH CENTER	22	67.0	33.0
HOUSING PARK	23	34.0	13.5
CHAMPLAIN HALL	24	84.2	48.5
FEATHERMAN HALL	25	70.5	50.0
MORGANE HALL	26	84.0	35.0
PICKUS BIOMEDICAL CENTER	27	83.3	44.3
BUSH CENTER	28	66.3	40.0
SOKOKIS HALL	29	95.9	45.1
HAROLD ALFOND FORUM	30	97.3	46.4
LEONARD HALL	31	62.5	23.2
DANIELLE N. RIPICH COMMONS	32	79.0	49.83
1 HILLS BEACH ROAD	33	75.1	17.5
590 POOL STREET	34	77 +/-	14 +/-

GRAPHIC SCALE

200' 0 100' 200' 400' 800'

(IN FEET)
1 inch = 200 ft.

THIS PLAN SHALL NOT BE MODIFIED WITHOUT WRITTEN PERMISSION FROM SITE DESIGN ASSOCIATES, ANY ALTERATIONS, OTHERWISE, SHALL BE AT THE USER'S SOLE RISK AND WITHOUT LIABILITY TO SITE DESIGN ASSOCIATES.

REV.	DATE	STATUS	BY	CHKD.	APPD.	REV.	DATE	STATUS	BY	CHKD.	APPD.
B	2/08/23	FOR SUBMISSION	DEPT	DEPT	TWS						
A	1/20/23	FOR CITY OF BIDDEFORD REVIEW	DEPT	DEPT	TWS						

Site Design Associates
Consulting Engineering & Land Planning
23 Whitney Way Topsham, Maine 04086 Tel: (207) 449-4275

CLIENT:
UNIVERSITY OF NEW ENGLAND
11 HILLS BEACH ROAD
BIDDEFORD, MAINE 04005

DESIGN: DEPT.
DRAWN: DEPT.
CHKD: TWS
DATE: JANUARY 2023
SCALE: 1" = 200 FT±

PROJECT: UNE CAMPUS MASTER PLAN
11 HILLS BEACH ROAD BIDDEFORD, MAINE 04005

EXISTING CONDITIONS PLAN

PROJ. NO. –
REV. B
DWG. NO. MP-101

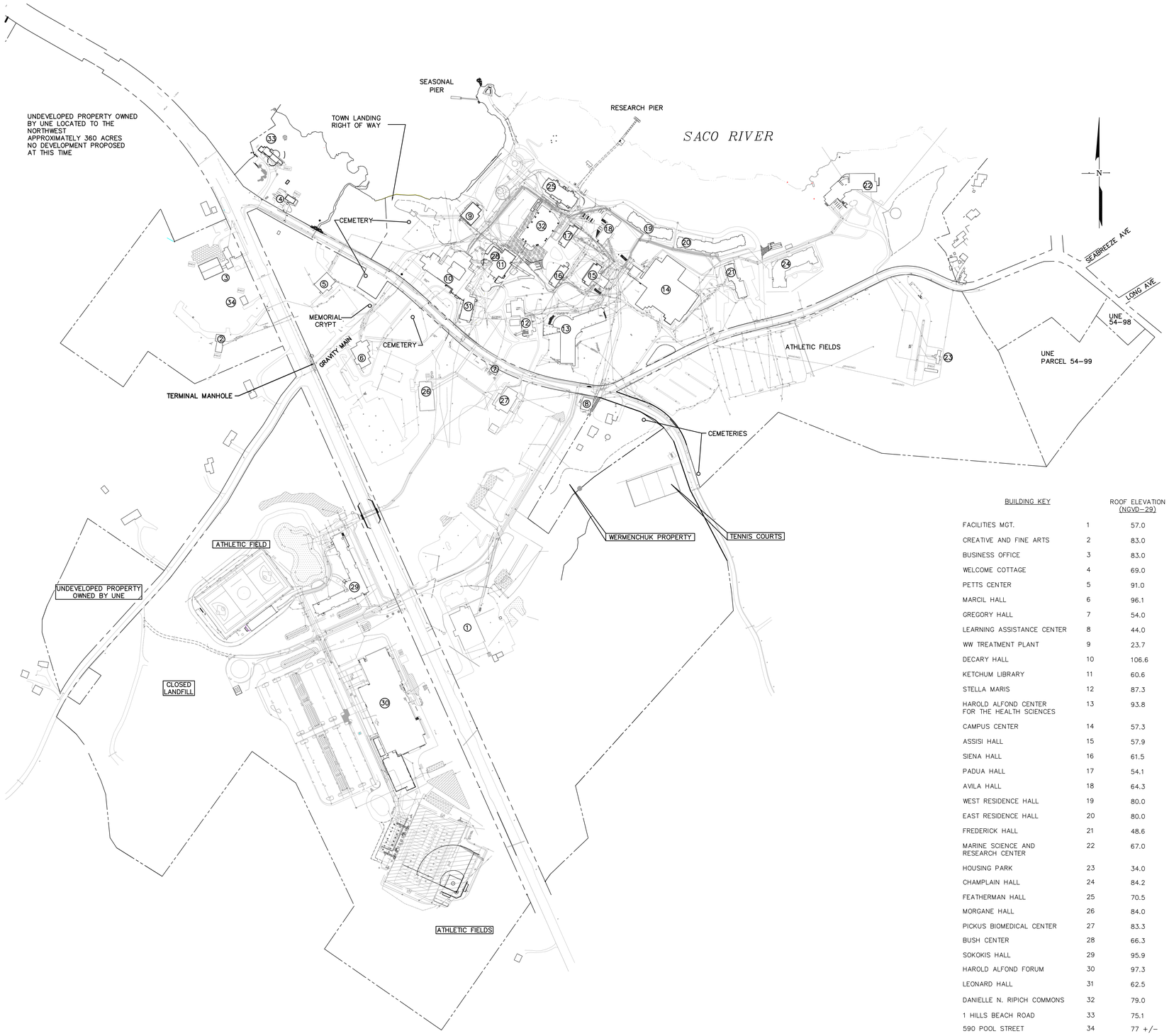

BUILDING KEY		ROOF ELEVATION (NGVD-29)	BUILDING HEIGHT (PER ORDINANCE DEFINITION)
FACILITIES MGT.	1	57.0	18.0
CREATIVE AND FINE ARTS	2	83.0	22.0
BUSINESS OFFICE	3	83.0	18.3
WELCOME COTTAGE	4	69.0	16.0
PETTS CENTER	5	91.0	27.5
MARCIL HALL	6	96.1	40.0
GREGORY HALL	7	54.0	16.0
LEARNING ASSISTANCE CENTER	8	44.0	14.0
WW TREATMENT PLANT	9	23.7	9.6
DECARY HALL	10	106.6	69.4
KETCHUM LIBRARY	11	60.6	30.4
STELLA MARIS	12	87.3	36.9
HAROLD ALFOND CENTER FOR THE HEALTH SCIENCES	13	93.8	55.3
CAMPUS CENTER	14	57.3	34.4
ASSISI HALL	15	57.9	31.2
SIENA HALL	16	61.5	30.8
PADUA HALL	17	54.1	30.4
AVILA HALL	18	64.3	40.1
WEST RESIDENCE HALL	19	80.0	47.0
EAST RESIDENCE HALL	20	80.0	47.0
FREDERICK HALL	21	48.6	23.2
MARINE SCIENCE AND RESEARCH CENTER	22	67.0	33.0
HOUSING PARK	23	34.0	13.5
CHAMPLAIN HALL	24	84.2	48.5
FEATHERMAN HALL	25	70.5	50.0
MORGANE HALL	26	84.0	35.0
PICKUS BIOMEDICAL CENTER	27	83.3	44.3
BUSH CENTER	28	66.3	40.0
SOKOKIS HALL	29	95.9	45.1
HAROLD ALFOND FORUM	30	97.3	46.4
LEONARD HALL	31	62.5	23.2
DANIELLE N. RIPICH COMMONS	32	79.0	49.83
1 HILLS BEACH ROAD	33	75.1	17.5
590 POOL STREET	34	77 +/-	14 +/-

GRAPHIC SCALE

200' 0 100' 200' 400' 800'

(IN FEET)
1 inch = 200 ft.

THIS PLAN SHALL NOT BE MODIFIED WITHOUT WRITTEN PERMISSION FROM SITE DESIGN ASSOCIATES, ANY ALTERATIONS, OTHERWISE, SHALL BE AT THE USER'S SOLE RISK AND WITHOUT LIABILITY TO SITE DESIGN ASSOCIATES.

REV.	DATE	STATUS	BY	CHKD.	APPD.
B	2/08/23	FOR SUBMISSION	DEPT	DEPT	TWS
A	1/20/23	FOR CITY OF BIDDEFORD REVIEW	DEPT	DEPT	TWS

Site Design Associates
Consulting Engineering & Land Planning
23 Whitney Way Topsham, Maine 04086 Tel: (207) 449-4275

CLIENT:
UNIVERSITY OF NEW ENGLAND
11 HILLS BEACH ROAD
BIDDEFORD, MAINE 04005

DESIGN: DEPT.
DRAWN: DEPT.
CHKD: TWS
DATE: JANUARY 2023
SCALE: 1" = 200 FT±

PROJECT: UNE CAMPUS MASTER PLAN
11 HILLS BEACH ROAD BIDDEFORD, MAINE 04005

EXISTING UTILITY PLAN

PROJ. NO. –
REV. A
DWG. NO. MP-102

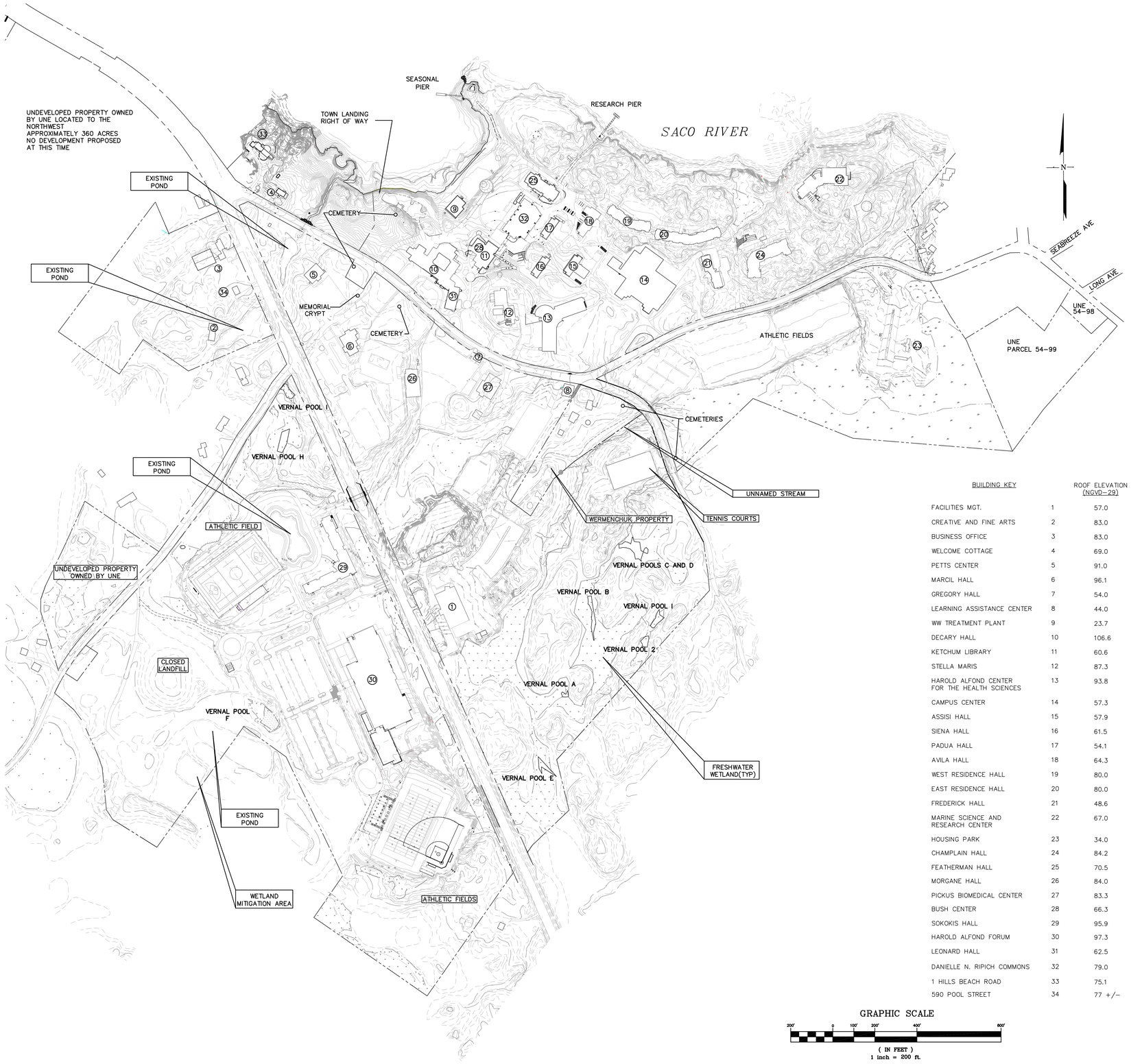

BUILDING KEY		ROOF ELEVATION (NGVD-29)	BUILDING HEIGHT (PER ORDINANCE DEFINITION)
FACILITIES MGT.	1	57.0	18.0
CREATIVE AND FINE ARTS	2	83.0	22.0
BUSINESS OFFICE	3	83.0	18.3
WELCOME COTTAGE	4	69.0	16.0
PETTS CENTER	5	91.0	27.5
MARCIL HALL	6	96.1	40.0
GREGORY HALL	7	54.0	16.0
LEARNING ASSISTANCE CENTER	8	44.0	14.0
WW TREATMENT PLANT	9	23.7	9.6
DECARY HALL	10	106.6	69.4
KETCHUM LIBRARY	11	60.6	30.4
STELLA MARIS	12	87.3	36.9
HAROLD ALFOND CENTER FOR THE HEALTH SCIENCES	13	93.8	55.3
CAMPUS CENTER	14	57.3	34.4
ASSISI HALL	15	57.9	31.2
SIENA HALL	16	61.5	30.8
PADUA HALL	17	54.1	30.4
AVILA HALL	18	64.3	40.1
WEST RESIDENCE HALL	19	80.0	47.0
EAST RESIDENCE HALL	20	80.0	47.0
FREDERICK HALL	21	48.6	23.2
MARINE SCIENCE AND RESEARCH CENTER	22	67.0	33.0
HOUSING PARK	23	34.0	13.5
CHAMPLAIN HALL	24	84.2	48.5
FEATHERMAN HALL	25	70.5	50.0
MORGANE HALL	26	84.0	35.0
PICKUS BIOMEDICAL CENTER	27	83.3	44.3
BUSH CENTER	28	66.3	40.0
SOKOKIS HALL	29	95.9	45.1
HAROLD ALFOND FORUM	30	97.3	46.4
LEONARD HALL	31	62.5	23.2
DANIELLE N. RIPICH COMMONS	32	79.0	49.83
1 HILLS BEACH ROAD	33	75.1	17.5
590 POOL STREET	34	77 +/-	14 +/-

GRAPHIC SCALE

200' 0 100' 200' 400' 800'

(IN FEET)
1 inch = 200 ft.

THIS PLAN SHALL NOT BE MODIFIED WITHOUT WRITTEN PERMISSION FROM SITE DESIGN ASSOCIATES, ANY ALTERATIONS, OTHERWISE, SHALL BE AT THE USER'S SOLE RISK AND WITHOUT LIABILITY TO SITE DESIGN ASSOCIATES.

REV.	DATE	STATUS	BY	CHKD.	APPD.
B	2/08/23	FOR SUBMISSION	DEPT	DEPT	TWS
A	1/20/23	FOR CITY OF BIDDEFORD REVIEW	DEPT	DEPT	TWS

Site Design Associates
Consulting Engineering & Land Planning
23 Whitney Way Topsham, Maine 04086 Tel: (207) 449-4275

CLIENT:
UNIVERSITY OF NEW ENGLAND
11 HILLS BEACH ROAD
BIDDEFORD, MAINE 04005

DESIGN: DEPT.
DRAWN: DEPT.
CHKD: TWS
DATE: JANUARY 2023
SCALE: 1" = 200 FT±

PROJECT:
UNE CAMPUS MASTER PLAN
11 HILLS BEACH ROAD BIDDEFORD, MAINE 04005

TOPOGRAPHIC AND NATURAL RESOURCES PLAN

PROJ. NO. –
REV. B
DWG. NO. MP-103

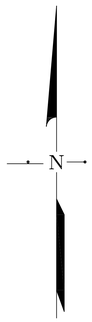

BUILDING KEY		ROOF ELEVATION (NGVD–29)	BUILDING HEIGHT (PER ORDINANCE DEFINITION)
FACILITIES MGT.	1	57.0	18.0
CREATIVE AND FINE ARTS	2	83.0	22.0
BUSINESS OFFICE	3	83.0	18.3
WELCOME COTTAGE	4	69.0	16.0
PETTS CENTER	5	91.0	27.5
MARCIL HALL 226500 N	6	96.1	40.0
GREGORY HALL	7	54.0	16.0
LEARNING ASSISTANCE CENTER	8	44.0	14.0
WW TREATMENT PLANT	9	23.7	9.6
DECARY HALL	10	106.6	69.4
KETCHUM LIBRARY	11	60.6	30.4
STELLA MARIS	12	87.3	36.9
HAROLD ALFOND CENTER FOR THE HEALTH SCIENCES	13	93.8	55.3
CAMPUS CENTER	14	57.3	34.4
ASSISI HALL	15	57.9	31.2
SIENA HALL	16	61.5	30.8
PADUA HALL	17	54.1	30.4
AVILA HALL	18	64.3	40.1
WEST RESIDENCE HALL	19	80.0	47.0
EAST RESIDENCE HALL 226500 N	20	80.0	47.0
FREDERICK HALL	21	48.6	23.2
MARINE SCIENCE AND RESEARCH CENTER	22	67.0	33.0
HOUSING PARK	23	34.0	13.5
CHAMPLAIN HALL	24	84.2	48.5
FEATHERMAN HALL	25	70.5	50.0
MORGANE HALL	26	84.0	35.0
PICKUS BIOMEDICAL CENTER	27	83.3	44.3
BUSH CENTER	28	66.3	40.0
SOKOKIS HALL	29	95.9	45.1
HAROLD ALFOND FORUM	30	97.3	46.4
LEONARD HALL	31	62.5	23.2
DANIELLE N. RIPICH COMMONS	32	79.0	49.83
1 HILLS BEACH ROAD	33	75.1	17.5
590 POOL STREET	34	77 +/–	14 +/–

ARCHAEOLOGICAL SURVEY BY ARC, INC. OF ELLSWORTH, MAINE.

- POSITIVE TEST PIT (TYP)
- NEGATIVE TEST PIT (TYP)
- TEST PIT IDENTIFICATION (TYP)
- APPROXIMATE TREE LOCATION

UNE CONTRACTED WITH A PRE HISTORIC ARCHAEOLOGIST TO MONITOR EARTHWORK DURING CONSTRUCTION OF FEATHERMAN HALL IN 2006. THE RESULTS WERE NEGATIVE

SACO RIVER

EXISTING FOUNDATION AND DUG WELL

A PHASE 1 ARCHAEOLOGICAL SURVEY WAS PERFORMED IN 2003 WITHIN A 200' RADIUS OF STELLA MARIS HALL. THE RESULTS WERE NEGATIVE

GRAPHIC SCALE

100' 0 50' 100' 200' 400'

(IN FEET)
1 inch = 100 ft.

THIS PLAN SHALL NOT BE MODIFIED WITHOUT WRITTEN PERMISSION FROM SITE DESIGN ASSOCIATES, ANY ALTERATIONS, OTHERWISE, SHALL BE AT THE USER'S SOLE RISK AND WITHOUT LIABILITY TO SITE DESIGN ASSOCIATES.

REV.	DATE	STATUS	BY	CHKD.	APPD.
B	2/08/23	FOR SUBMISSION	DEPT	DEPT	TWS
A	1/20/23	FOR CITY OF BIDDEFORD REVIEW	DEPT	DEPT	TWS

Site Design Associates
Consulting Engineering & Land Planning
23 Whitney Way Topsham, Maine 04086 Tel: (207) 449-4275

CLIENT:
UNIVERSITY OF NEW ENGLAND
11 HILLS BEACH ROAD
BIDDEFORD, MAINE 04005

DESIGN: DEPT.
DRAWN: DEPT.
CHKD: TWS
DATE: JANUARY 2023
SCALE: 1" = 100 FT±

PROJECT: UNE CAMPUS MASTER PLAN
11 HILLS BEACH ROAD BIDDEFORD, MAINE 04005

ARCHAEOLOGICAL SURVEY

PROJ. NO. –
REV. B
DWG. NO. MP–104

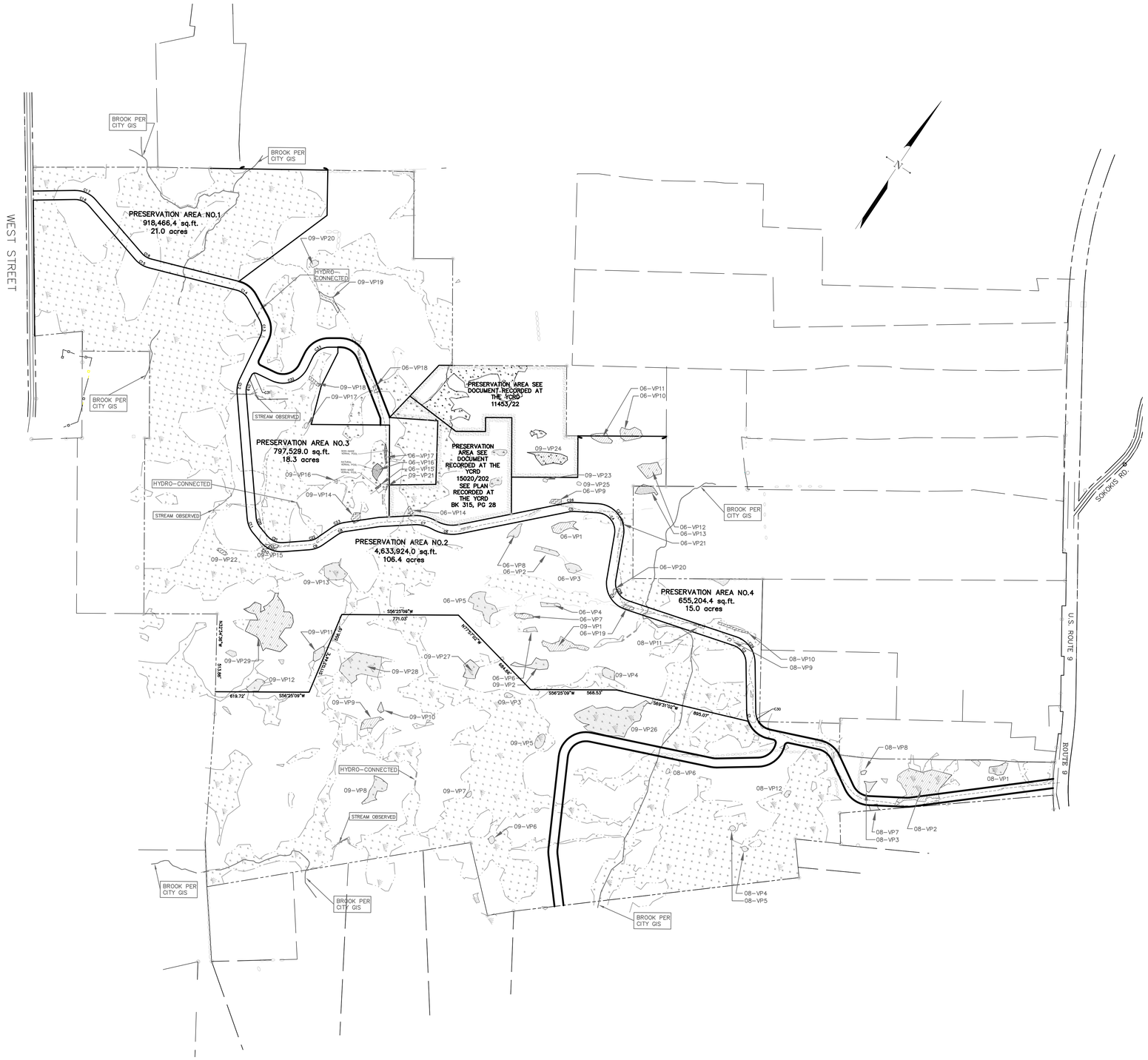

NO DEVELOPMENT IS PROPOSED FOR THIS PARCEL UNDER THE MASTER PLAN. IT WILL CONTINUE TO BE USED FOR RESEARCH AND EDUCATIONAL PURPOSES.

GRAPHIC SCALE

300 0 150 300 600 1200

(IN FEET)
1 inch = 300 ft.

THIS PLAN SHALL NOT BE MODIFIED WITHOUT WRITTEN PERMISSION FROM SITE DESIGN ASSOCIATES, ANY ALTERATIONS, OTHERWISE, SHALL BE AT THE USER'S SOLE RISK AND WITHOUT LIABILITY TO SITE DESIGN ASSOCIATES.

REV.	DATE	STATUS	BY	CHKD.	APPD.
B	2/08/23	FOR SUBMISSION	DEPT	DEPT	TWS
A	1/20/23	FOR CITY OF BIDDEFORD REVIEW	DEPT	DEPT	TWS

Site Design Associates
Consulting Engineering & Land Planning
23 Whitney Way Topsham, Maine 04086 Tel: (207) 449-4275

CLIENT:
UNIVERSITY OF NEW ENGLAND
11 HILLS BEACH ROAD
BIDDEFORD, MAINE 04005

DESIGN: DEPT.
DRAWN: DEPT.
CHKD: TWS
DATE: JANUARY 2023
SCALE: 1" = 300 FT±

PROJECT:
UNE CAMPUS MASTER PLAN
11 HILLS BEACH ROAD BIDDEFORD, MAINE 04005

EXISTING CONDITIONS AND NATURAL RESOURCES PLAN – 360 ACRE PARCEL

PROJ. NO. –
REV. B
DWG. NO. MP–105

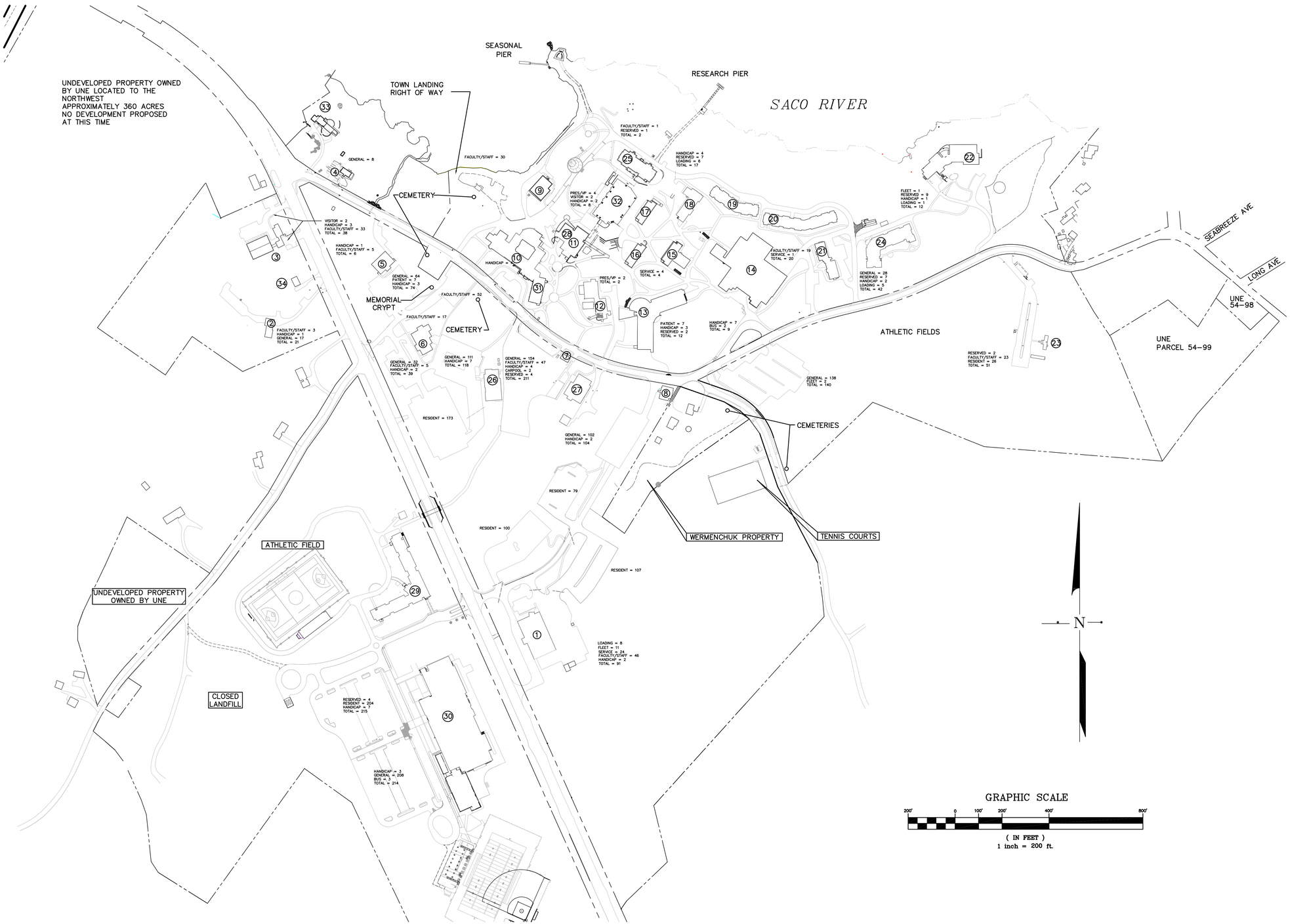

BUILDING KEY

FACILITIES MGT.	1
CREATIVE AND FINE ARTS	2
BUSINESS OFFICE	3
WELCOME COTTAGE	4
PETTS CENTER	5
MARCIL HALL 228500 N	6
GREGORY HALL	7
LEARNING ASSISTANCE CENTER	8
WW TREATMENT PLANT	9
DECARY HALL	10
KETCHUM LIBRARY	11
STELLA MARIS	12
HAROLD ALFOND CENTER FOR THE HEALTH SCIENCES	13
CAMPUS CENTER	14
ASSISSI HALL	15
SIENA HALL	16
PADUA HALL	17
AVILA HALL	18
WEST RESIDENCE HALL	19
EAST RESIDENCE HALL 228500 N	20
FREDERICK HALL	21
MARINE SCIENCE AND RESEARCH CENTER	22
HOUSING PARK	23
CHAMPLAIN HALL	24
FEATHERMAN HALL	25
MORGANE HALL	26
PICKUS BIOMEDICAL CENTER	27
BUSH CENTER	28
SOKOKIS HALL	29
HAROLD ALFOND FORUM	30
LEONARD HALL	31
DANIELLE N. RIPICH COMMONS	32
1 HILLS BEACH ROAD	33
590 POOL STREET	34

THIS PLAN SHALL NOT BE MODIFIED WITHOUT WRITTEN PERMISSION FROM SITE DESIGN ASSOCIATES, ANY ALTERATIONS, OTHERWISE, SHALL BE AT THE USER'S SOLE RISK AND WITHOUT LIABILITY TO SITE DESIGN ASSOCIATES.

REV.	DATE	STATUS	BY	CHKD.	APPD.	REV.	DATE	STATUS	BY	CHKD.	APPD.
B	2/08/23	FOR SUBMISSION	DEPT	DEPT	TWS						
A	1/20/23	FOR CITY OF BIDDEFORD REVIEW	DEPT	DEPT	TWS						

Site Design Associates
Consulting Engineering & Land Planning
23 Whitney Way Topsham, Maine 04086 Tel: (207) 449-4275

CLIENT:
UNIVERSITY OF NEW ENGLAND
11 HILLS BEACH ROAD BIDDEFORD, MAINE 04005

DESIGN: TWS
DRAWN: DEPT.
CHKD: TWS
DATE: JANUARY 2023
SCALE: 1"=200 FT±

PROJECT:
UNE CAMPUS MASTER PLAN
11 HILLS BEACH ROAD BIDDEFORD, MAINE 04005

EXISTING PARKING PLAN

PROJ. NO. –
DWG. NO. P–100
REV. B

Drawing Name: N:\08-21601 UNE Biddeford Master Plan\2021-22\Dwg\2023 Master Plan 01-13-23 | Plot Date / Time: Feb. 8, 23 / 8:00 PM

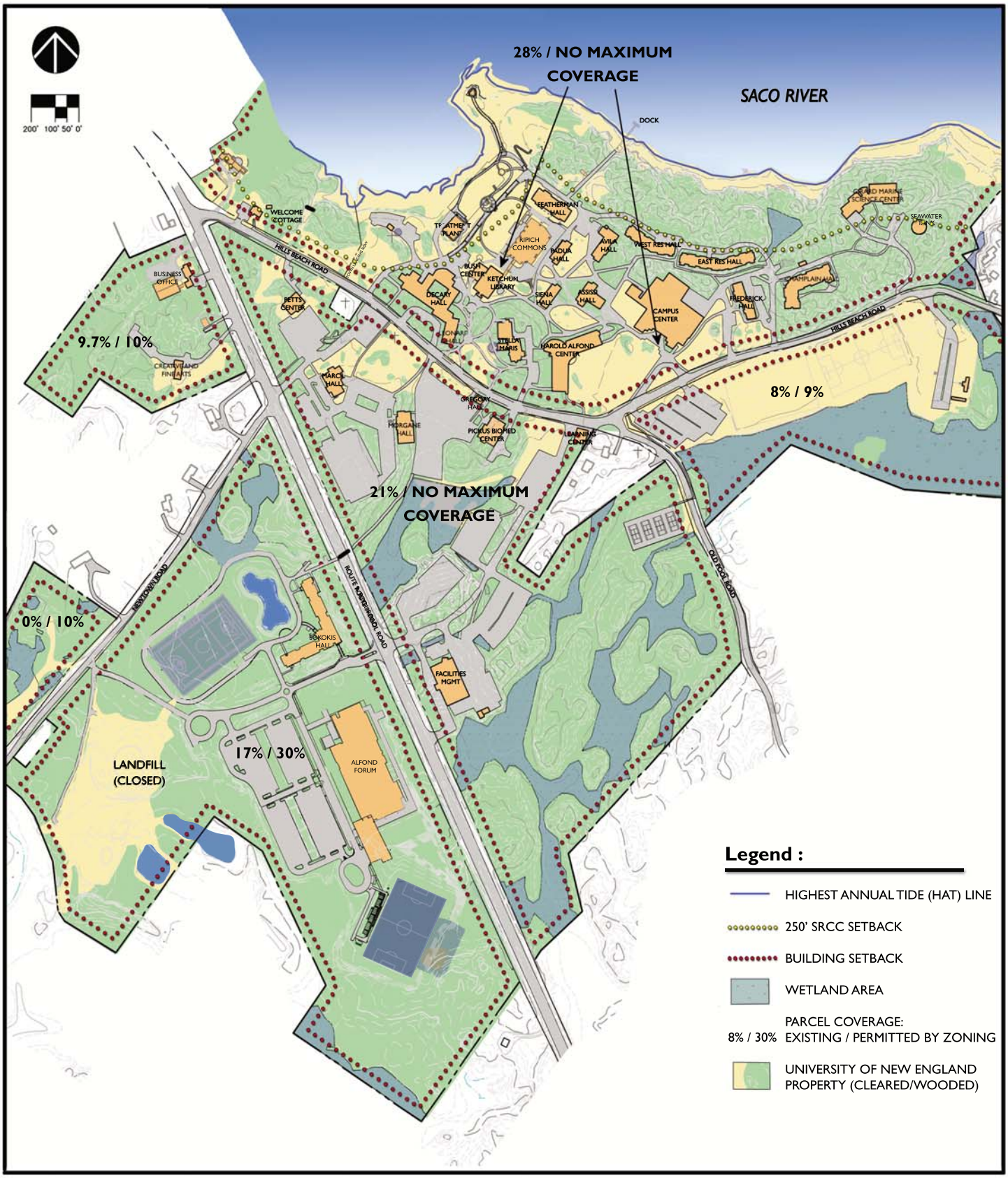

November 10, 2022

UNE

University of New England - Biddeford Campus

Campus Master Plan

Restrictions on Developable Areas

Site Design Associates
Civil Engineering and Land Planning

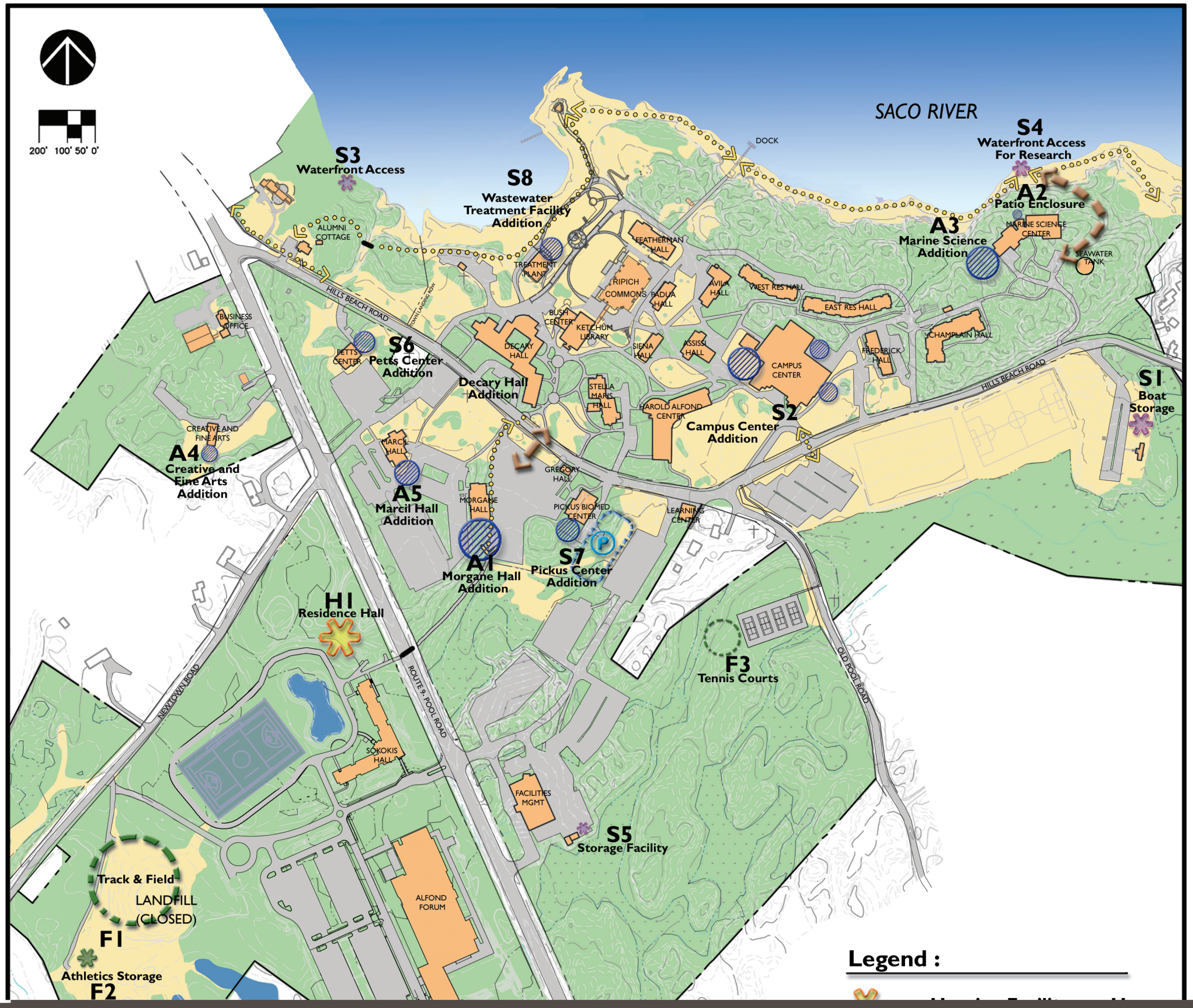
200' 100' 50' 0'
SACO RIVER
S3
Waterfront Access
S8
Wastewater
Treatment Facility
Addition
DOCK
S4
Waterfront Access
For Research
A2
Patio Enclosure
A3
Marine Science
Addition
ALUMNI
COTTAGE
TREATMENT
PLANT
FEATHERMAN
HALL
MARINE SCIENCE
CENTER
SEAWATER
TANK
HILLS BEACH ROAD
TOWN LANDING ROW
RIPICH
COMMONS
PADUA
HALL
AVILA
HALL
WEST RES HALL
EAST RES HALL
BUSINESS
OFFICE
BUSH
CENTER
KETCHUM
LIBRARY
CHAMPLAIN HALL
PETTS
CENTER
S6
Petts Center
Addition
DECARY
HALL
SIENA
HALL
ASSISI
HALL
FREDERICK
HALL
Decary Hall
Addition
CAMPUS
CENTER
S1
Boat
Storage
STELLA
MARIS
HALL
HAROLD ALFOND
CENTER
S2
Campus Center
Addition
CREATIVE AND
FINE ARTS
A4
Creative and
Fine Arts
Addition
MARCIL
HALL
GREGORY
HALL
A5
Marcil Hall
Addition
MORGAN
HALL
PICKUS BIOMED
CENTER
LEARNING
CENTER
A1
Morgan Hall
Addition
S7
Pickus Center
Addition
H1
Residence Hall
F3
Tennis Courts
NEWTOWN ROAD
ROUTE 9, POOL ROAD
OLD POOL ROAD
SOKOKIS
HALL
FACILITIES
MGMT
S5
Storage Facility
Track & Field
LANDFILL
(CLOSED)
ALFOND
FORUM
F1
Athletics Storage
F2
Legend :

500' 250' 0'

ROUTE 9 - POOL ROAD

WETLAND PRESERVATION AREA

WEST STREET

WETLAND PRESERVATION AREA

364 ACRE PARCEL

NEWTOWN ROAD

OLD POOL ROAD

MAIN CAMPUS

SACO RIVER

HILLS BEACH RD

S3 Waterfront Access
S8 Wastewater Treatment Facility Addition
S4 Waterfront Access For Research
A2 Patio Enclosure
A3 Marine Science Addition
S6 Pete's Center Addition
Decrey Hall Addition
S2 Campus Center Addition
S1 Boat Storage
A4 Creative and Performing Arts Addition
A5 Morrill Hall Addition
A1 Morgane Hall Addition
S7 Pickus Center Addition
H1 Residence Hall
F3 Tennis Courts
S5 Storage Facility
Track & Field LANDFILL (CLOSED)
F1
Athletics Storage F2
F5 Athletics Storage
Field F4

Legend :

- Housing Facility
- Academic Facility
- Support Facility
- Athletic Facility
- Athletic Field
- Addition
- Vehicular Circulation
- Pedestrian Circulation
- Parking Facility
- University of New England Property (Cleared-Wooded)

January 18 2023

Note:
Graphic symbols are representative of approximate building size (footprint) but are not representative of building shape or height.

January 18, 2023

Site Design Associates
Civil Engineering and Land Planning

University of New England - Biddeford Campus
Campus Master Plan
University Properties

UNE

APPENDIX

Institutional Zone

Ordinance

UNIVERSITY OF NEW ENGLAND
INSTITUTIONAL ZONE
MASTER PLAN SUBMISSION
2023-2027

Section 11. Institutional master plan. [Ord. No. 2001.90, § 7, 10-16-2001]

A. Applicability. Any university use or other use conducted by a college or university in an institutional zone shall be consistent with an institutional master plan approved by the Planning Board in accordance with this section. Any site plan approval or other approval for such uses shall be consistent with the approved institutional master plan.

B. Transition provisions.

1. Following the adoption of this section, the City shall continue to process any pending applications for site plan approval in the institutional zone and shall issue the required permits for these projects if approved and for any other approved but unbuilt projects. This shall include only the following University of New England projects:

a. Construction of two approved residence halls;

b. Expansion of the cafeteria;

c. Construction of a facilities management building;

d. Installation of lighting at the existing athletic fields.

2. The Planning Board shall not approve site plans for any other new or expanded buildings and structures, including parking lots, in the institutional zone not addressed in 1. until an institutional master plan has been approved for the college or university. Similarly, the City shall not issue building, plumbing, electrical, or other permits for any other new or expanded buildings or structures in the institutional zone not addressed in 1. until an institutional master plan is approved.

C. Coordination with site plan review. All projects in the institutional zone that require site plan review in accordance with Article XI of this Code shall continue to require site plan review and approval. In reviewing site plans for university uses or other uses conducted by a college or university in an institutional zone, the Planning Board shall consider the conformance of the proposed activities with the approved institutional master plan and shall approve the project only if it finds that the activities are consistent with the institutional master plan as well as the other standards of Article XI and the provisions of the institutional zone.

In its review of projects in the institutional zone, the Planning Board shall be guided by the approved institutional master plan and shall not impose conditions or requirements on an applicant that are in conflict with the approved institutional master plan. In those areas where the master plan addresses issues that are also covered by site plan review, the Planning Board shall be guided by the overall direction provided in the approved institutional master plan and shall limit the scope of its review under the site plan provisions to how the projects contained in the master plan are designed and constructed to conform to the standards of Section B of Article XI. The following chart outlines the respective areas of concern for the review of an institutional master plan and the site plans for individual projects contained in the master plan for those areas covered in both reviews:

Review Topic	**Institutional Master Plan Review Focus**	**Site Plan Review Focus**
Buildings, athletic facilities, and supporting structures	The need for the facilities is related to program growth and changes supported in the master plan, and the general sizes and locations are appropriate based upon those needs	The buildings and/or facilities generally conform to the approved master plan and meet the specific zoning and site plan review standards
Road network and traffic	The primary road network providing access to the campus and within the campus will be adequate to handle the anticipated increase in traffic safely and efficiently while minimizing the impact on other users as a result of the identified improvements	Any road or traffic improvements that are identified in the overall traffic management program in the master plan that are needed to support the specific development project will be built and will meet the technical standards set out in the ordinance
Parking	The amount of parking and general parking locations will be adequate to accommodate the anticipated increase in parking demand resulting from the growth and changes anticipated in the master plan	Any parking improvements that are identified in the overall parking program in the master plan that are needed to support the specific development project will be built and will meet the technical standards set out in the ordinance

Review Topic	Institutional Master Plan Review Focus	Site Plan Review Focus
Water and sewer	The water and sewer systems will be adequate to accommodate the anticipated increase in demand resulting from the growth and changes anticipated in the master plan	The location and design of the water and sewer facilities associated with the specific development proposal are consistent with the master plan and meet the technical standards set out in the ordinance
Landscaping, lighting, signs, noise, scenic views	The master plan establishes appropriate standards for the design of these elements and to minimize the impact on surrounding neighborhoods	The location and design of these elements are consistent with the standards set out in the master plan and meet any other applicable technical standards set out in the ordinance
Pedestrian and bicycle facilities	The pedestrian and bicycle facilities will be adequate to accommodate the anticipated increase in demand resulting from the growth and changes anticipated in the master plan and standards are established for the design of these elements	The location and design of these elements are consistent with the master plan, meet the standards set out in the master plan, and any other technical standards set out in ordinance

D. Variances. Notwithstanding the provisions of Section 4 of Article IX of this Code, the Zoning Board of Appeals shall not grant variances with respect to the dimensional standards of the institutional zone unless the need for such variation is identified in an approved institutional master plan and such variation is explicitly endorsed by the Planning Board in its approval of the master plan.

E. Timing of the initial master plan submission. Any college or university located within an institutional zone shall submit an institutional master plan meeting the requirements of this section to the Planning Board for review within two years of the adoption of this section.

F. Amendment of an approved master plan. A college or university may submit a request to amend the approved institutional master plan at any time provided that no request for an amendment shall be considered within three months of the date of the previous approval of the institutional master plan. The process, procedures, and standards for amending a master plan shall be the same as for the initial approval, however, the applicant may submit an application containing only those items that have been changed from the prior master plan.

G. Submission and review procedures. The institutional master plan shall contain the information and exhibits set forth in Subsection H. Upon receipt of the initial submission of an institutional master plan or a proposed amended master plan, the application shall be processed and reviewed in accordance with the procedures for reviewing site plan applications with the following additional provisions:

1. Upon receipt of an institutional master plan or an amendment to an approved master plan, the City planning staff shall have 14 days to review the plan for completeness. If the staff finds that the master plan provides all of the information set forth in Subsection H, the staff shall find the plan to be complete, shall notify the applicant, in writing, of this determination, and shall place the master plan on the agenda of the next regularly scheduled Planning Board meeting. The applicant will forward 10 copies of the proposed master plan for Planning Board review. If the staff finds the master plan to be incomplete, it shall notify the applicant, in writing, of this determination and shall indicate the additional information required.

2. Upon receipt of an institutional master plan, the planning department shall notify all agencies and departments regularly notified of site plan applications as well as the Biddeford Conservation Commission and any neighborhood organization that has requested to be notified of the submission of the master plan.

3. Prior to the approval of an institutional master plan or an amended institutional master plan, the Planning Board shall hold a public hearing.

4. The Planning Board shall review the institutional master plan at a regularly scheduled meeting of the Board. The Board shall have 30 days following its initial consideration of the plan to approve, approve with conditions, or deny the master plan.

5. A copy of any approved institutional master plan or an amendment to a master plan shall be filed with the City Clerk. **[Amended 3-5-2019 by Ord. No. 2019.14]**

H. Contents of the institutional master plan. An institutional master plan shall provide the City and abutting neighborhoods with a clear outline of the anticipated growth and changes of the institution over the next five to 10 years and the potential impact of those changes on the City and areas surrounding the institution. The master plan should, therefore, contain a description of the current programs and facilities of the college or university, a description of anticipated changes in programs and facilities over the next five years, an analysis of the potential impacts of the anticipated changes on the facilities and the surrounding neighborhoods, an assessment of actions proposed to mitigate any adverse impacts resulting from the anticipated changes, and a conceptual plan showing the approximate size and location of proposed facility improvements.

The institutional master plan shall contain at least the following information and exhibits:

1. Mission statement and institutional objectives.

    a. The institution's adopted mission statement.

    b. A statement of any anticipated changes in the institution's mission over the next five years.

    c. A statement of the institution's objectives with respect to growth and change over the next five years.

2. Existing physical conditions.

    a. A scaled plan at a scale of not more than one inch equals 200 feet showing the location of all existing buildings, structures, athletic fields and facilities, parking, walkways, service areas, and other impervious surfaces and the height of all buildings and structures referenced to the National Geodetic Vertical Datum (NGVD).

    b. A scaled plan at the same scale as the existing conditions plan showing the location of all existing utilities, sewer and water systems, and stormwater drainage facilities.

    c. A natural resources inventory and analysis showing the location of all significant natural resources within those areas of the campus that are already developed or where development activities including clearing or filling are proposed or that will be potentially impacted by proposed development activities. The analysis shall assess the significance of these resources and the issues they raise with respect to the master plan. This shall include a plan at the same scale as the existing conditions plan showing the locations of the significant resources.

    d. An historic and archeological resources inventory and analysis showing the location of any known historic or archeological resources and any area with potential as an area of historic or archeological significance within those areas of the campus that are already developed or where development activities including clearing or filling are proposed or that will be potentially impacted by proposed development activities. This shall include a plan at the same scale as the existing conditions plan.

    e. Data on the existing lot coverage and lot coverage ratio.

3. Programs and activities.

    a. A narrative providing at least the following information about current programs and activities:

        (1) The current educational programs and degree offerings.

        (2) Other regularly scheduled programs or activities offered or hosted by the institution.

(3) Current enrollment of full time and part time students by head count based upon the most recent integrated postsecondary data survey (IPDS) report.

(4) Current employment by type of positions and full time/part time status by head count based upon the most recent IPDS report.

(5) The number of people living on campus.

b. A narrative describing how the programs and activities and the number of students, employees, campus residents, and program participants are anticipated to change over the next five years.

4. Educational, research, residential, support and athletic facilities.

a. A description and plan identifying what buildings and facilities are currently used for these purposes.

b. The current bed capacity of all residential buildings and the anticipated change in the total bed capacity.

c. A description of any significant changes in the type of use made of existing buildings, significant expansions of existing buildings, or new buildings and facilities that are anticipated to be needed in the next five years.

d. A description of how the anticipated changes in facilities relate to program changes and the institution's mission.

5. Parking and traffic.

a. Information on current traffic volumes and conditions including levels of service on the principal public streets and intersections of public streets within the zone and on the primary access routes to the campus.

b. A description of anticipated changes in traffic volumes over the next five years resulting from the changes in programs and facilities included in the master plan.

c. An analysis of the impact of these changes on traffic flow and vehicular and pedestrian safety on public streets within the zone and that provide access to the campus.

d. A proposed program of improvements to address any unacceptable impacts resulting from changes in traffic volumes including activities that will be undertaken to mitigate any adverse impacts on adjacent residential neighborhoods.

e. Information on the number and location of existing parking spaces.

f. An analysis of the adequacy of the existing parking to meet anticipated changes in programs and facilities over the next five years.

g. An assessment of pedestrian and bicycle movements and safety related to the parking supply and locations.

h. A proposed program of parking improvements to meet any identified deficiencies.

6. Water and sewer service.

a. A description of current provisions for water supply and sewage disposal including capacities, current utilization rates, and conformance with any permit or other legal standards.

b. An analysis of the change in demand for water supply and sewage disposal resulting from anticipated changes in programs and facilities over the next five years and the adequacy of the existing systems to meet this demand.

c. A proposed program of improvements to address any identified deficiencies.

d. A statement as to how water supply and sewer disposal improvements are or will be coordinated with City programs and the needs of neighboring residential areas.

7. Municipal and community services.

a. A description of all municipal and community services (police, fire, rescue, recreation, etc.) currently utilized by the institution and data on the current level of usage.

b. An analysis of the change in demand for municipal and community services and the adequacy of the existing services to meet this demand.

c. A proposed program of improvements to meet the identified deficiencies including proposed funding mechanisms.

8. Neighborhood impacts.

a. An assessment of how current campus activities impact neighboring residential areas including, but not limited to, traffic, noise, and visual intrusions. This assessment shall consider conformity to current City and state standards with respect to these items as well as documented evidence of any community or neighborhood concerns relative to these issues.

b. An evaluation of current efforts to mitigate these impacts.

c. An assessment of any changes in these impacts resulting from the changes in programs or facilities included in the master plan.

d. A program for mitigating the adverse impacts of proposed changes or improvements on surrounding residential neighborhoods.

9. Community outreach.

    a. A description of current community outreach activities.

    b. An analysis of anticipated changes in outreach activities over the next five years.

10. Conceptual development program.

    a. A conceptual site plan at the same scale as the existing conditions plan showing the approximate size and location of proposed changes to buildings, structures, parking lots, pedestrian facilities, bicycle facilities, athletic fields and facilities, roads, and similar facilities proposed in the master plan. This should show new facilities, modifications or enlargements of existing facilities, and the planned removal of facilities.

    b. An accompanying narrative or tables detailing the scale or size of the proposed improvements including the approximate height of buildings, the approximate peak elevation of buildings and structures referenced to NGVD, approximate floor area, approximate size of parking areas, or approximate occupancy.

    c. A description of all development and design standards or provisions that will apply to the proposed improvements in accordance with Subsection I.

    d. A schedule setting out when the improvements included in the conceptual development program are anticipated to be completed.

I. Development and design standards. The institutional master plan shall establish development and design standards that shall apply to all development proposals and other improvements within the institutional zone. These development and design standards will apply to individual projects that are submitted for site plan review. These standards shall foster the development of a visually and architecturally integrated campus that is safe, environmentally sensitive, and that minimizes the adverse impact of the campus on neighboring residential areas. At a minimum, these development and design standards shall address the following areas:

1. Landscaping. The standards shall establish a general pattern for all campus landscaping including the typical size and type of plantings and shall detail how landscaping will be used to enhance the visual environment of the campus, shield and soften service and parking areas, and minimize impacts on surrounding residential areas and the users of public streets through the campus.

2. Exterior lighting. The standards shall establish a general lighting theme for the campus and shall identify the appropriate maximum, average, or minimum illumination levels and uniformity ratios for various areas and facilities, the typical type of lighting fixtures and poles that will be used, and shall detail how night-time sky glow and light intrusion on neighboring residential areas

will be minimized.

3. Signage. The standards shall establish a consistent design theme for all campus signs that enhances the visual environment of the campus and shall identify the general design, sizes, and locations for various types of campus signs.

4. Pedestrian and bicycle facilities. The standards shall establish an integrated program for accommodating pedestrians and bicyclists safely while promoting a campus environment that is pedestrian focused. The standards shall identify the types, general location, and typical design of various pedestrian and bicycle facilities.

5. Noise. The standards shall establish an overall program for minimizing the impact of campus noise on adjacent residential areas. The standards shall identify measures that will be employed to control noise at the source as well as to mitigate the impacts of noise on adjacent property.

6. Architectural design and details. The standards shall establish an integrated design theme for campus buildings that is harmonious with existing buildings while promoting a high level of design for new buildings. The standards shall address the scale and massing of buildings, appropriate materials and colors, rooflines, locations of building entrances, architectural detailing, and similar features to create a visually attractive campus while minimizing impacts on surrounding residential areas.

7. Protection of identified scenic views. The standards shall establish a standard approach for protecting scenic views within or from the campus that have been formally identified and approved by the City Council.

J. Approval standards. In reviewing an institutional master plan, the Planning Board shall approve the master plan if it finds that:

1. The activities and facilities proposed in the master plan are consistent with the institution's mission statement.

2. The facilities conform to the requirements of the institutional zone and other applicable provisions of the zoning ordinance.

3. There is a reasonable expectation that individual projects carried out in accordance with the institutional master plan will be able to be designed so that they comply with the site plan review standards of Article XI.

4. The activities and facilities will be designed in a manner that will not unreasonably increase adverse impacts on adjacent residential neighborhoods or the facilities or services of the City of Biddeford.

5. The City Council and UNE shall establish a scholarship and community grant program, within the first six months of the acceptance of the university's master plan.

K. Appeals of Planning Board action. Appeals of the actions of the Planning Board in

reviewing and approving institutional master plans under this section shall be to the City of Biddeford's Zoning Board of Appeals. The applicant and any party to the review of the institutional master plan may appeal any action of the Planning Board within 30 days of such action by providing written notice to the Board of Appeals setting forth the action being appealed and the specific basis for the appeal. Appeals of Planning Board actions in the review of an institutional master plan shall be processed in accordance with the procedures set out in Section 5 of Article IX of this ordinance.[1]

1. **Editor's Note: The provisions of former Section 12, Medical marijuana dispensary moratorium, added 3-16-2010 by Ord. No. 2010.23, have expired and therefore are not included in the Code.**

Fecteau, Roby

From: cheri@srcc-maine.org
Sent: Monday, October 20, 2025 10:50 PM
To: Fecteau, Roby
Cc: chairperson@srcc-maine.org; Dan Shorette; Haley Lachance
Subject: SRCC Staff Response to concerns about UNE Pier Permit (Permit #20-491)
Attachments: 2025_10_20 SRCC Staff Statement on Permit #20-491.pdf

Caution: This is an external email. Please take care when clicking links or opening attachments. When in doubt, contact the IT Department

Hello Roby,

I have found it necessary to write a staff-level response to recent misstatements or misleading statements about the permit granted to the UNE pier project by the Commission, as was put into an article recently in the online publication the Biddeford Gazette, and also sent to various audiences and news outlets via email. Please find my statements attached, which I hope will bring clarity and information to any Biddeford process or file that might benefit from them.

No other regulatory body is required to rely on the outcome of SRCC decisions (unless that is their policy), as each applies a different set of regulations, and the Saco River Corridor Act may be more or less strict than others that are applicable. The purpose of this letter is not to sway or convince any permitting deliberation – it is strictly to provide accurate information about SRCC, its permitting process, SRCC Permit #20-209 (issued in 2001), and the currently active SRCC Permit #20-491, for the UNE research pier.

Thank you,

Cheri

Cheri Dunning, Executive Director
Saco River Corridor Commission
207-625-8123
cheri@srcc-maine.org
81 Maple St.(office)
P.O. Box 283 (mailing address)
Cornish, ME 04020-0283

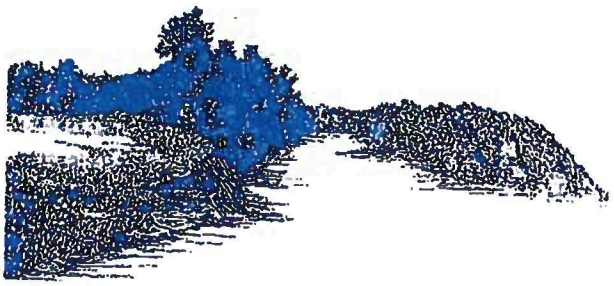

Saco River Corridor Commission

"Communities Working Together To Protect Our Rivers"

10/20/2025

Mr. Roby Fecteau
Biddeford Code Enforcement
P.O. Box 586
Biddeford, ME 04005

Re: Permit #20-491 (University of New England Research Pier)

Dear Mr. Fecteau,

I've prepared this letter in response to recent misconstrued statements that misrepresent the Commission's staff and process. This letter is intended to explain the SRCC's process in regards to permitting in general and the status of Permit #20-491, which was issued to the University of New England (UNE) in August 2024.

Staff statements, such as those contained in this letter or in any reported quotations, are not statements of the Commission and are made within the bounds of the staff's knowledge. My interest in providing a staff-level statement in response to recent communications/articles is to ensure that there is no misunderstanding about or misconstruing of the Commission's procedures, the validity of SRCC permits, or the actions/statements of the staff. To that purpose, I provide the following points:

1. To the knowledge of its staff, the Saco River Corridor Commission and the staff followed a correct and typical process for considering the application from UNE in August 2024, which was approved as Permit #20-491.
2. Permit #20-491, as granted by the Commission, remains valid and is neither under review nor in question at the SRCC office. No reconsideration petition was received, and there has been no finding of falsification in the application materials.
3. Any statement that the granting of the permit, or the permitted project itself, is "illegal" is incorrect, so far as the SRCC's review is concerned. The staff make no statement about the project's adherence to other rules and regulations not under the purview of the Commission.
4. There was a condition placed on an amendment to a different UNE permit in 2001 (Permit #20-209), which was phrased as follows:

   > "*The applicants are hereby required to retain and maintain a 250 foot wide vegetative buffer along the entire shoreline of the property, measured horizontally starting from the mean high water line and proceeding inland, described herein (Lot #4, Biddeford Property Map #52). Failure to do so will result in revocation of Permit #20-209 and all subsequent amendments.*"

5. That condition appears to require that the University refrain from clearing vegetation within the 250-foot buffer *without further permitting*. The condition restricts the actions of the University, and not the subsequent actions of the Commission.

P.O. Box 283 - Cornish, Maine 04020-0283 - (207) 625-8123 Fax (207) 625-7050 Email: srcc@srcc-maine.org

6. Since that condition was placed, UNE has applied for several permits for development within the 250-foot buffer, and the Commission has granted some of those requests with full knowledge of this previous buffer condition. The permit application files, permit orders, and meeting minutes can be made available for review upon request.

7. It is the understanding of staff, as advised by counsel, that the Commission is not restricted from granting further permits for development within the 250-foot buffer by the above-stated 2001 permit amendment condition. The condition was created by, and thus can be altered by, the Commission.

8. While the 2001 amendment condition was not discussed during the evaluation of Permit #20-491 in August 2024, the existence of that condition would not have prevented the Commission from issuing Permit #20-491 if the proposed pier project was found to be in line with the applicable regulations of the Saco River Corridor Act and its associated Chapters. The Commission granted the permit after such a review of the project as presented. As the permit has not been overturned or revoked by any mechanism, it remains valid until its expiration date of 9/13/2026.

9. SRCC staff did not have knowledge of the 2001 amendment prior to the August 2024 Commission meeting, and the 250-foot buffer condition was therefore not made part of the Commission's review materials. However, the omission of such information does not invalidate the Commission's decision.

10. The staff is aware of no evidence of deliberate omission or falsification of information presented to the Commission during the review of Permit #20-491. It is the conclusion of the SRCC's staff that the Commission acted with correct procedures in this matter.

11. There was no error in the staff-level handling of Application (now Permit) #20-491. Past permit research is an optional, sometimes helpful feature of the staff's process, and is not required by the Act or any Commission policy – it is conducted, when time allows, to provide context, or is researched to answer specific questions if there is a known issue.

12. Permit conditions like the one seen on Permit #20-209 that are applicable beyond the expiration date of the permit are rare, and our staff plans to implement an additional tracking measure to bring similar longstanding conditions to the attention of the staff at the time of a new application, so that they are more easily brought to the attention of the Commission if relevant. The lack of past permitting research in this case, or in any matter before the Commission, does not in any way invalidate the Commission's decisions.

If any further clarification is needed, please contact us at 207-625-8123 or srcc@srcc-maine.org.

Sincerely,

Cheri Dunning

Cheri Dunning
Executive Director
Saco River Corridor Commission
P.O. Box 283, 81 Maple Street
Cornish, Maine 04020
207-625-8123

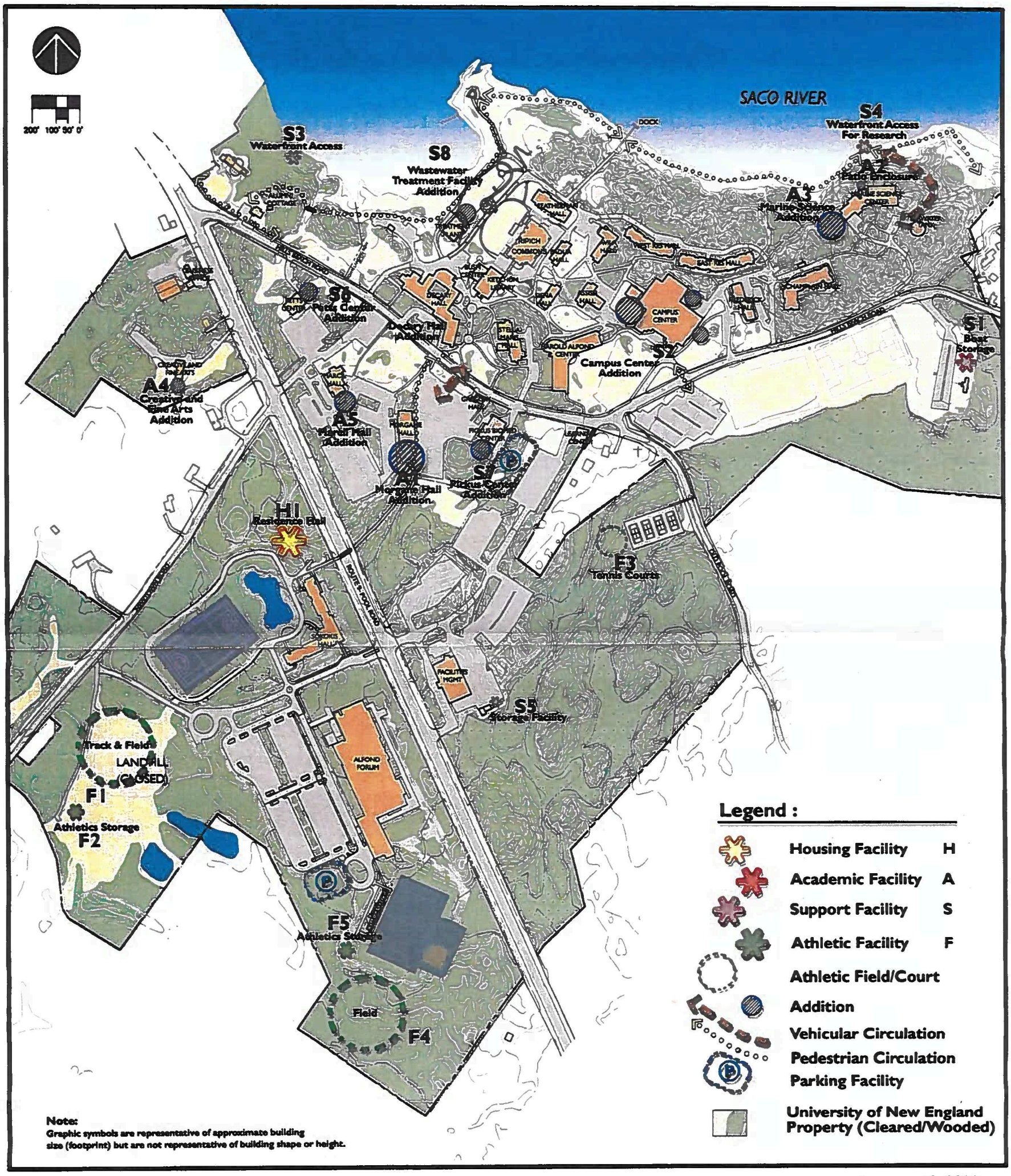

January 18, 2023

UNE
University of New England - Biddeford Campus
Campus Master Plan
Five Year Development Strategy

Site Design Associates
Civil Engineering and Land Planning

Whitten, Nan

From: Fishing Woes <fishingwoes@gmail.com>
Sent: Sunday, October 26, 2025 3:50 PM
To: Grohman, Martin
Subject: Mr. Mayor, here's why you lost the election

Caution: This is an external email. Please take care when clicking links or opening attachments. When in doubt, contact the IT Department

Just one example. After the planning board approved UNE's pier application, you, Mr. Belanger, and Mr. Lafountain were asked several questions about the city's role in expelling mooring owners so that UNE could begin building their pier. Mr. Belanger and Mr. Lafountain answered promptly and in detail.

You didn't answer at all. Asked a second time, you still refused to answer. Didn't even acknowledge that you had received the email. Your fear of constituents who ask tough questions was made crystal clear. Belanger and Lafountain had the courage to answer, you didn't.

Those were questions about the consequences of *your* policy. Voters now know that when faced with that situation, you take no responsibility, you run away and hide, you throw other people under the bus. Try to paper it over with another Facebook video. You've demonstrated this over and over again. That's why you lost the election.

Unfortunately, elections are not won or lost by the frequency of insipid Facebook posts. People know Jim Bennett fully briefed you on his UNE plan --- you're *the Mayor*, for God's sake. *You knew*. You defended the city's process right from the beginning. And you certainly took no action in the last two years to change the city's course and stand up for the little guy. Ever.

You were asked to put UNE on the agenda Tuesday night. Not only didn't you do it, you lied about it, right there in public. Pretended you didn't know. Two days later at the citizens meeting you told the newspaper, "It's important that people understand I had nothing to do with removing the harbormaster from the review process." At the debate you said, "That wasn't a decision made at my level."

How dumb do you think we are?

You chose to work not for the people, but for the Powerful. You heard loud and clear from the citizens the other night --- the city needs to start the UNE process over again. By now you should have already written to UNE's president, asking him to withdraw the application and then resubmit. You should have found a way for a real harbormaster to review the application as required by the city charter. That would have been actual leadership.

None of the current Councilors want you re-elected. They're all supporting Belanger or Lafountain. At least two candidates running to be new Councilors have rejected your endorsement.

You own it.

Whitten, Nan

From: Fishing Woes <fishingwoes@gmail.com>

Sent: Wednesday, October 8, 2025 4:28 PM
To: jherbert1@une.edu; sdelage@une.edu; athibeault@une.edu
Cc: wmtw@wmtw.com; desk@newscentermaine.com; tvmail@wgme.com; srichelieu@metln.org; dinamendros@gmail.com; newsdesk@sacobaynews.com; sean.a.murphy@charter.com
Subject: UNE pier in death throes

Caution: This is an external email. Please take care when clicking links or opening attachments. When in doubt, contact the IT Department

UNE People:

It has now been more than two months since the Planning Board approved your application for a new pier. At the time you were quoted as saying you wanted to start construction this fall, and that it was up to the City of Biddeford to clear the mooring owners out of the way.

At a neighborhood party several weeks ago, you told those gathered that construction would start "soon."

It won't. The location in which UNE wants to build its pier remains unavailable to the university. Other parties, mooring owners, already occupy that space on the river. The mooring owners submitted two letters to the City confirming no mooring owner would move.

Asked if City action to remove the mooring owners was imminent, the Mayor, true to form, simply refused to answer his constituents. He's too afraid to accept the consequences of his pro-pier lobbying. However, his two mayoral opponents, and other city councilors as well, reported they expect *no Council action* to remove mooring owners in good standing. The harbormaster remains the harbormaster, and he has been clear that he has no plans to relocate any current mooring owner.

We ask UNE yet again. **When, against whom, and on what legal basis will you be filing a lawsuit to expel current mooring owners?**

Whitten, Nan

From: Pier Review <unepierreview@yahoo.com>
Sent: Thursday, October 9, 2025 12:11 PM
To: Randy Seaver; sean.a.murphy@charter.com; srichelieu@metln.org; dinamendros@gmail.com; newsdesk@sacobaynews.com
Subject: A sincere THANK you

Caution: This is an external email. Please take care when clicking links or opening attachments. When in doubt, contact the IT Department

It's nice to have some good news for a change! This good news is about transparency, open government, and Biddeford's new city manager, Truc Dever.

As you know, the Planning Board's decision to approve UNE's pier has been appealed to the Zoning Board of Appeals (ZBA). Last month Biddeford's City Solicitor arranged for Attorney Keith Richard of Archipelago to provide legal counsel to the ZBA during the appeal.

Many months ago beach residents asked about hiring Archipelago to represent Biddeford citizens as UNE's application headed toward Planning Board review. Archipelago was compelled to decline the invitation due to a conflict of interest. The logical conclusion was that one or more of the firm's attorneys had previously had UNE as a client. Also:

- Sophia King is a Permitting Associate at the firm, having recently graduated from UNE with a B.A. in Marine Affairs.
- Elias Young is a Research Analyst and Paralegal at the firm. He is a recent graduate of the Marine Affairs program at UNE.
- Grayson Szczepaniak is an Attorney at the firm. She is a graduate of the Marine Science program at UNE.
- A co-founder of the firm, Attorney Sandra Guay, was a law partner of the City Solicitor at Woodman Edmands for many years, before she founded Archipelago.
- On September 23rd, a professor at UNE enthusiastically wrote about an attorney at Archipelago, "He and his staff are also good friends to UNE, having hired 3 of our graduates (25% of the staff! 2 marine affairs majors, 1 marine science major), and hosted interns."

Those were the folks who were going to hear the appeal about UNE's marine sciences research pier. On September 26, city manager Truc Devers wrote to various parties, "After careful consideration and discussion with staff and leadership, I have chosen to engage with another law firm to represent the Zoning Board of Appeals in the matter related to the UNE pier. Lisa Gilbreath from Pierce Atwood LLP has been assigned to this matter after a thorough conflict check."

Yes, we are all concerned about the location of UNE's pier. Most believe a better location exits than what has been proposed and approved. But the bigger concern has always been about transparency in government, and proper process.

By this single action of listening to constituent concerns and taking decisive action, Manager Dever sent a strong signal that better days may be ahead. She has our appreciation for this important decision, which came very early in her tenure.

Have a great day.

Whitten, Nan

From: Fishing Woes <fishingwoes@gmail.com>
Sent: Monday, October 13, 2025 10:28 AM
To: Grohman, Martin
Subject: Fake outrage, real desperation

Caution: This is an external email. Please take care when clicking links or opening attachments. When in doubt, contact the IT Department

Nobody's buying your attempt in the Saturday morning video to use city employees as props to deflect attention away from your poor performance. When a candidate said City Hall is broken, he wasn't talking about the fire department, the police department, public works, or the employees at City Hall. He was talking about you, and you know it.

In August, after the planning board decision, all three candidates were asked to give detailed answers about the status of moorings. Mr. Belanger answered the questions in detail. Same with Mr. Lafountain. You, on the other hand, refused to answer the questions. You just ran away.

When this is how the Mayor behaves, City Hall is broken. You are the top guy, and you have responsibility for all major decisions. The decision to remove Randy Desmaris as harbormaster for no reason at all was a major decision, yet when confronted with it on Friday night you said, "It wasn't a decision made at my level."

Passing the buck, accepting no responsibility, avoiding accountability. Duly noted, once again.

Whitten, Nan

From: Patterson, Robin
Sent: Thursday, August 14, 2025 7:09 AM
To: Dever, Truc; Galbraith, David; Phinney, Brian
Cc: Matherne, Gerry; Plotkin, Alexa; Whitten, Nan; Fecteau, Roby
Subject: Re: UNE Research Dock Approval

I would also add that we had 18 moorings not renew this year and 18 on the current waitlist. I sent the lists to Paul in July. I believe he has only approved a few of the waitlist applicants so far. Not every location would be a match for this group but at least there are potential openings to consider.

From: Dever, Truc <truc.dever@biddefordmaine.org>
Sent: Wednesday, August 13, 2025 9:03 PM
To: Patterson, Robin <Robin.Patterson@biddefordmaine.org>; Galbraith, David <David.Galbraith@biddefordmaine.org>; Phinney, Brian <Brian.Phinney@Biddefordmaine.org>
Cc: Matherne, Gerry <gerry.matherne@biddefordmaine.org>; Plotkin, Alexa <Alexa.Plotkin@biddefordmaine.org>; Whitten, Nan <Nan.Whitten@Biddefordmaine.org>; Fecteau, Roby <Roby.Fecteau@Biddefordmaine.org>
Subject: Re: UNE Research Dock Approval

Thank you Robin and David.
I think this is a very fair approach to relocating impacted mooring owners.
Brian-- let's connect on this real quick tomorrow. Unless it requires official approval from Council, I can include this in an email to Council and give direction to the Harbormaster.

Thanks!

Truc Dever, MPA
City Manager
City of Biddeford
(207) 284-9313
truc.dever@biddefordmaine.org

From: Patterson, Robin <Robin.Patterson@biddefordmaine.org>
Sent: Wednesday, August 13, 2025 2:54 PM
To: Galbraith, David <David.Galbraith@biddefordmaine.org>; Phinney, Brian <Brian.Phinney@Biddefordmaine.org>; Dever, Truc <truc.dever@biddefordmaine.org>
Cc: Matherne, Gerry <gerry.matherne@biddefordmaine.org>; Plotkin, Alexa <Alexa.Plotkin@biddefordmaine.org>; Whitten, Nan <Nan.Whitten@Biddefordmaine.org>; Fecteau, Roby <Roby.Fecteau@Biddefordmaine.org>
Subject: RE: UNE Research Dock Approval

David,

Thank you for sharing this update and the list of moorings.

Here is some information on the waitlist and application.

The waitlist does not carry over from year to year. We start fresh every January 1st. The current waitlist is on our website. No action is taken on a regular waitlist until the payment cut off (June 30th) has passed. The waitlist is at the discretion of the Harbor Master, I see no issue with him relocating this list before starting on the regular waitlist. They pay a $10 fee and there are no guarantees.

It is my understanding that the permits expire on December 31st as well. The March 15th deadline is to renew without a late fee. Harry has a copy of the application and could verify. I have also attached a copy. I'm not sure if anyone is using their mooring in the winter. Maybe #5. Paul would know.

I currently send out renewal reminders by hand and will not include these. If we are using the new business software at that point I will not enter them for renewal status.

Thank you,

Robin

From: Galbraith, David <David.Galbraith@biddefordmaine.org>
Sent: Wednesday, August 13, 2025 2:39 PM
To: Phinney, Brian <Brian.Phinney@Biddefordmaine.org>; Dever, Truc <truc.dever@biddefordmaine.org>
Cc: Patterson, Robin <Robin.Patterson@biddefordmaine.org>; Matherne, Gerry <gerry.matherne@biddefordmaine.org>; Plotkin, Alexa <Alexa.Plotkin@biddefordmaine.org>; Whitten, Nan <Nan.Whitten@Biddefordmaine.org>; Fecteau, Roby <Roby.Fecteau@Biddefordmaine.org>
Subject: UNE Research Dock Approval

Brian (& Truc), as you are aware, last Wednesday night (8-6-25) the Planning Board approved UNE's Research Dock Proposal. The research dock will displace between two to seven existing moorings which exist within the project area. The mooring locations are issued yearly and the mooring owners impacted or potentially impacted are listed below:

1. Tom Hatch, mooring #12,
2. Bob Brackett, mooring #150,
3. Gregg McPherson, mooring #138,
4. William Mitchell, mooring #48,
5. Captain Shawn Tibbetts, mooring #126,
6. Mike Ramunno, mooring # 46, and
7. Steve Goebeil, mooring number 248.

The above mooring licenses are valid until March 14, 2026. Harry Center (City Attorney) has already determined that the City has the legal rights to relocate these impacted moorings. During the public hearing process, UNE agreed to relocate the impacted moorings at their (UNE's) cost, and although the March 14th deadline is over 7 months away, I recommend the following items be considered / implemented as soon as possible. The project will require the relocation of at minimum 2 moorings,

but it COULD displace as many as 6. It is further my understanding that there is a waiting list for new moorings. The existing / impacted mooring owners have been seeking answers as they certainly don't want to be left without mooring space (particularly the commercial fishermen). Prior to final approval I had a quite positive meeting with Tom Hatch (Mooring # 12) who will CERTAINLY need to be relocated. The mooring owners are aware that there is a waiting list for mooring space/locations, and understandably don't want to lose their moorings entirely or be placed on a waiting list. My suggestions are below:

1. I recommend the Manager's Office and / or City Council send Paul Lariviere (Harbor Master) and Randy Desmaris (Assistant Harbor Master) an official directive to contact all of the impacted mooring owners to inform them of the needed relocation.

2. The impacted mooring owners should be given preference over folks on the waiting list.

3. Harbor Master should be directed to work with impacted mooring owners. Mr. Hatch (the only mooring owner to meet / talk with me) requested to be in the same general area as he is currently located as the waters are calmer and not impacted as much by ice. He also has a 22' boat which needs maneuvering room. Mr. Hatch's request seemed fairly reasonable, and it seems like we have the room to make this happen (I am NOT a certified harbormaster, nor an expert in waterway navigation).

4. UNE has agreed to pay the cost of relocating impacted moorings and I included a Condition of Approval (COA) within the Findings of Fact (FOF) document to hold them to this agreement (COA below).

   COA: *As agreed during the public hearing process, the University of New England (UNE) shall be responsible for the reasonable costs, as applicable, for the relocation of all impacted moorings displaced by the construction of the UNE research pier._*

5. The moorings will need to be relocated immediately before or upon permit expiration, and PRIOR to the construction of the UNE Pier.

6. <u>The above listed mooring permits should NOT be reissued by the Finance / Clerk's Office, until new locations have been assigned</u>.

Please advise
Thanks
David

David C.M. Galbraith
Deputy Director Planning and Development / City Planner
City of Biddeford
205 Main Street
Office Hours:
Monday- Tuesday 7:00 am – 5:00 pm
Wednesday- Thursday 8:00 am- 4:00 pm
Friday- Closed

Whitten, Nan

From: Paul Lariviere <paul@southernmainemarine.com>
Sent: Saturday, August 16, 2025 10:14 AM
To: Whitten, Nan
Subject: FW: history
Attachments: 2025-08-08_074604.pdf; 2025-08-08_074604.pdf

Caution: This is an external email. Please take care when clicking links or opening attachments. When in doubt, contact the IT Department

Not sure you received this,please pass this along .

From: Paul Lariviere
Sent: Saturday, August 16, 2025 8:31 AM
To: mppb2000@yahoo.com
Subject: FW: history

information

From: Paul Lariviere
Sent: Saturday, August 16, 2025 7:39 AM
To: b_wermenchuk@yahoo.com; sajanaku@lpc.com; Dale Wermenchuk <dalewermenchuk@gmail.com>
Subject: FW: history

Information.

From: Paul Lariviere
Sent: Friday, August 15, 2025 6:04 AM
To: To: Attorney General <Attorney.General@maine.gov>; Samuel.L.Sheppard@maine.gov; Wood, Robert <Robert.Wood@maine.gov>; hcenter@woodedlaw.com; Martin.Grohman@biddefordmaine.org; dking@metln.org; dmendros@metln.org; editor@inthecourier.com; news@pressherald.com; newsdesk@sacobaynews.com; Liam <liam.lafountain@biddefordmaine.org>; Marc <marc.lessard@biddefordmaine.org>; Doris <doris.ortiz@biddefordmaine.org>; William <William.Emhiser@Biddefordmaine.org>; Scott <scott.whiting@biddefordmaine.org>; Roger <roger.beaupre@biddefordmaine.org>; Dylan <dylan.doughty@biddefordmaine.org>; Neva <neva.gross@biddefordmaine.org>; Belanger, Norman <norman.belanger@biddefordmaine.org>
Cc: randy@randyseaver.com; Fisk, JoAnne <joanne.fisk@biddefordmaine.org>; Simmons, Robert <robert.simmons@biddefordmaine.org>; Macneill, Shelly <shelly.macneill@biddefordmaine.org>; Patterson, Robin <robin.patterson@biddefordmaine.org>; Phinney, Brian <brian.phinney@biddefordmaine.org>; board@mebaroverseers.org; schafernjohn@gmail.com; John Hennedy (john@bpbuildersme.com) <john@bpbuildersme.com>; nan.whitten@biddefordmaine.org; Daryen Granata <dgranata@maineharbormasters.org>; 'west_wind_04005@yahoo.com' <west_wind_04005@yahoo.com>; Jesse Loomer <jesse@southernmainemarine.com>; Bill Mackeil <billmdbi@gmail.com>; Fecteau, Roby <Roby.Fecteau@Biddefordmaine.org>; Jim Lupian (jimpipewrench@gmail.com) <jimpipewrench@gmail.com>; Kyle Noble (noblehouse@maine.rr.com)

<noblehouse@maine.rr.com>
Subject: history

A conflict of interest for an attorney, under Maine Bar rules, can arise when their prior financial gain, or any other interest, potentially compromises their ability to represent a client's interests impartially. This includes situations where the attorney's financial interests are averse to the clients, or where the attorney's prior relationship with another party could influence their judgment.

A note to all,6/17/24 the attached email was sent to all for concerns of conflict of interest. If one reviews all the recorded meetings of the planning boards UNE pier proposals it is very evident of the bias that is shown by the city's attorney ,during the last meeting of miss direction of our Water Ways Ordinances and miss interpretation expounded by the city's attorney was very evident to sway the vote of a democratic board of volunteers

.

The bias is shown at its worst most recently when a campaign was orchestrated by the city attorney who among other misdirection told Planning Board members not to worry about the mooring holders as their permits are only good for one year as the Board prepared to vote on the UNE application. This was captured on video. A false and misleading statement as by statute the location allocated to a mooring owner that has been assigned by the Harbor Master is valid until there are reasons to remove, nonpayment to the city of $180.00 per year, non-inspection ,hazard to navigation or probable cause to justify removal of a violation. The location assigned by the Harbor Master is good for the life of the mooring holder as long as the permit fee is paid every year per Biddeford's ordinance.

July of 2015 an alternate location was given to UNE with minimum encroachment of the Saco River and mooring holders , during the first meeting 8/2015 this pier location that was just approved was denied by Harbor Master Marshall Alexander and with the rep. from the Corps of Engineers for that reason of encroachment of others on State owned land/water ways. Colonial ordinance 1641-1647 ,Federal Regulation ,State of Maine Title 38 & 12 are the reasons for Biddeford Ordinance 74-35

. Harbor Masters by legislation of the State of Maine have been empowered with the authority to permit moorings to the public ,commercial moorings, moorings with Federal Permits, wharfs , piers, docks ,floats and landings . Our Ordinance 74-35 that had been imposed February 2013 to our Water-Ways Ordinance backs up the Harbor Masters authority. Dose the planning board actually have the authority to permit anything that is beyond the Mean High-Water line when Ordinance 74-35 was adopted for this reason? The City of Biddeford does not own the Saco River or its bottom ;the State of Maine does and belongs to the public. Federal regulations are about equal access to all under Colonial Ordinances that are still in effect today.
This document is for all to view ,it is a public document for Government Transparency ,feel free to share with the public.

Paul Lariviere
Southern Maine Marine Services Inc.
2461 Portland Rd.
Arundel, ME 04046
(207)283-1099

Wade Goldthwait

From: Paul Lariviere
Sent: Thursday, June 12, 2025 10:25 AM
To: Wade Goldthwait
Subject: FW: Conflict of Interest

From: Paul Lariviere
Sent: Monday, June 17, 2024 10:44 AM
To: Mayor Martin Grohman <martin.grohman@biddefordmaine.org>; liam.lafountain@biddefordmaine.com; JoAnne Fisk (joanne.fisk@bpd.net) <joanne.fisk@bpd.net>
Cc: Lamontagne, Danica <Danica.Lamontagne@Biddefordmaine.org>; schafernjohn@gmail.com; 'Bennett, James' <James.Bennett@Biddefordmaine.org>; 'Phinney, Brian' <brian.phinney@biddefordmaine.org>; anna.love@maine.gov; 'Macneill, Shelly' <shelly.macneill@biddefordmaine.org>; Simmons, Robert <robert.simmons@biddefordmaine.org>; hcenter@woodedlaw.com; Patterson, Robin <robin.patterson@biddefordmaine.org>; jthompson@memun.org; anna.love@maine.gov; Fecteau, Roby <Roby.Fecteau@Biddefordmaine.org>
Subject: Conflict of Interest

Good morning to all, I feel obligated to inform you of what is believed to be a conflict of interest held by the City Attorney Harry Center in the pending matter of James Bennett vs. Saco River Regulations including myself, the Deputy Harbor Master and Harbor Commission. Attorney Center has past business with UNE to include his sale of 13 acres of land to UNE in the year 2/15/2000 as evidence Book 9904 Page 92 of the York County Registry of Deeds. To complete further matters, the law firm of Woodman Edmands, Attorney At Law in which Attorney Center is a partner, has and continues to provide legal services to my business and personal affairs.

I as Harbor Master for the City of Biddeford highly recommend that those in elected authorities in the City of Biddeford consult with the Maine Overseers of Bar for their opinion as to conflict by a licensed attorney in the circumstances presented to you. As this saga continues to unfold, it's in the City's best interest to remove any party acting on the City's behalf that has realized a financial benefit from UNE and who's own law firm has had a financial interest with a regulator who has been targeted by Manager Bennett for removal from UNE proposed Saco River pier project regulatory process. It appears at this juncture that an outside investigation is warranted into the entire course of conduct by the City Manager and City Attorney that brings us to the complicated situation the city now finds itself.

This recommendation is part of my duty as a public servant and keeping with the best practices for municipal government .
This is a public document for the transparency of government needs.

BK 9904PG092

WARRANTY DEED 006678

We, Samuel Serpico and Florence Serpico, both of Saco, County of York, State of Maine and Harry B. Center II and Philomene A. Center, both of Biddeford, County of York and State of Maine and Paul J. Barton and Mary A. Barton both of Brighton, County of Suffolk, Commonwealth of Massachusetts for consideration paid, grant to University of New England, an educational corporation existing under law, located at Biddeford, County of York, State of Maine, whose mailing address is 11 Hills Beach Road, Biddeford, Maine 04005, with **WARRANTY COVENANTS**, the land in Biddeford, County of York, State of Maine, described as follows:

MAINE R.E. TRANSFER TAX PAID

Parcel 1

A certain lot or parcel of land situated in the City of Biddeford, County of York and State of Maine, bounded and described as follows:

Beginning at an iron rod with survey cap driven into the ground on the westerly side of the New Pool Road as shown on "Maine State Highway Commission Right of Way Map, State Aid Highway #2, Biddeford, Maine", Sheet 3 of 5 dated April, 1960 and recorded at the York County Registry of Deeds in Plan Book 34, Page 15 at the northerly corner of the second parcel of land described in the deed from Gary E. Thompson and Denise Y. Thompson to Celeste Roberge dated April 6, 1988 and recorded at said York County Registry of Deeds in Book 4671, Page 108;

Thence, South 52° 52' West, partly by said land of Roberge and partly by land described in the deed from Florence E. Haley et al to William N. Day and Stephen A. Foran dated May 22, 1998 and recorded at said York County Registry of Deeds in Book 8814, Page 72, a distance of 717.61 feet (said course called North 52° 25' East, in said deed to Celeste Roberge and North 52° 45' 23" East, in said deed to Day & Foran);

Thence, North 37° 19' 30" West, by said land of Day & Foran, 655.00 feet to an iron pipe found set in an old stump (said line called South 37° 14' 37" East – 655.76 in said deed to Day & Foran);

Thence, North 52° 33' East, partly by land described in the deed from Arlene T. Chappell to Richard E. Rhames dated April 1, 1992 and recorded at said York County Registry of Deeds in Book 6033, Page 217 and partly by the first parcel of land described in the deed from the Estate of Ormon W. Haley to the University of New England dated September 9, 1994 and recorded at said York County Registry of Deeds in Book 7183, Page 256 a distance of 598.00 feet to the southwesterly end of a stone wall (said course called South 52° 47' West, in said deed to the University of New England);

Thence, North 51° 52' East, by said land of the University of New England and by said stone wall, 315.06 feet to the northeasterly end of said stone wall;

Thence, North 53° 18' East, by said land of the University of New England, 205.05 feet to an iron rod with survey cap driven into the ground;

Thence, South 06° 06' 45" East, by said westerly side of the new Pool Road, 772.76 feet to the point of beginning (said course shown as South 06° 06' East on said Maine State Highway Commission Right of Way Map).

Containing 13.872 acres.

Parcel 2

A certain lot or parcel of land situated in the City of Biddeford, County of York and State of Maine, bounded and described as follows:

Beginning at an iron rod with survey cap driven into the ground on the westerly side of the Old Pool Road at the easterly corner of land described in the deed from Emile A. Martin to Roy O. Wermenchuk and Marguerite C. Wermenchuk, dated October 13, 1977 and recorded at said York County Registry of Deeds in Book 2268, Page 284 and shown on a "Plan Showing A Proposed Sale, Clarina Berry to Franciscan Fathers of Maine" dated November 14, 1961 made by Libby & Dow;

Thence, by said westerly side of the Old Pool Road by the following five lines, South 17° 51' 15" East, a distance of 76.50 feet to an iron rod with survey cap driven into the ground;

Thence, South 00° 46' 45" East, a distance of 238.65 feet to an iron rod with survey cap driven into the ground;

Thence, South 09° 47' 15" East, a distance of 364.29 feet to the southerly end of a short piece of stone wall;

Thence, South 10° 04' 45" West, a distance of 153.72 feet;

Thence, South 12° 31' 15" West, a distance of 78.93 feet to an iron rod with survey cap #1303 found driven into the ground;

Thence, South 59° 59' West, partly by land described in the deed from Florence E. Haley and Sylvia L. Bourgeault to Daniel J. Buisson and Dominique S. Buisson, dated February 19, 1999 and recorded at said York County Registry of Deeds in Book 9326, Page 174, partly by land described in a second deed from Haley and Bourgeault to said Buisson, dated November 12, 1999 and recorded at said York County Registry of Deeds in Book 9779, Page 66, and partly by the first parcel of land described in the deed from the Estate of Ormon W. Haley to Florence E. Haley and Sylvia L. Bourgeault, dated October 4, 1994 and recorded at said York County Registry of Deeds in Book 7243, Page 140, a distance of 1084.33 feet to an iron pipe found set in a stone wall (said course called South 59° 59' 07" West in both deeds to said Buissons);

Thence, South 04° 20' 00" West, by said land of Haley and Bourgeault, 247.38 feet to an iron pipe found set in the ground at said stone wall;

Thence, by land described in the deed from James F. Thompson and Eve B. Thompson to Robert C. Kirby and Susan A. Kirby dated November 18, 1987 and recorded at said York County Registry of Deeds in Book 4542, Page 2 by the following two lines: South 64° 15' West, a distance of 240.00 feet to an iron rod with survey cap driven into the ground;

Thence, South 52° 52' West, a distance of 40.68 feet to an iron rod with survey cap driven into the ground on the easterly side of the New Pool Road (said iron rod with survey cap bears North 52° 52' East, a distance of 116.69 feet from said iron rod with survey cap driven into the ground on said westerly side of the New Pool Road at the point of beginning of the first parcel of land herein described);

Thence, North 06° 06' 45" West, by said easterly side of the New Pool Road as shown on said Maine State Highway Commission Right of Way Map recorded at said York County Registry of Deeds in Plan Book 34, Page 15, a distance of 771.74 feet to an iron rod with survey cap driven into the ground (said course shown as North 06° 06' West on said Maine State Highway Commission Right of Way Map);

Thence, North 53° 18' 00" East, partly by the second parcel of land described in the deed from the Estate of Ormon W. Haley to the University of New England dated September 9, 1994 and recorded at said York County Registry of Deeds in Book 7183, Page 256, and partly by land described in the deed from Daniel Johnson to Edwin Tarbox dated November 28, 1849 and recorded at said Registry in Book 222, Page 162, a distance of 841.01 feet to an iron rod with survey cap driven into the ground;

Thence, thru land formerly of Edwin Tarbox and the current owner being unknown, by the following two lines; North 48° 49' 45" West, a distance of 178.00 feet to a drill hole set in a stone wall;

Thence, North 31° 44' 45" West, a distance of 67.20 feet to an iron pipe found driven into the ground;

Thence, North 49° 05' 15" East, partly by said second parcel of land described in the deed to the University of New England recorded at said York County Registry of Deeds in Book 7183, Page 256, and partly by said land of Wermenchuk, 166.50 feet;

Thence, by said land of Wermenchuk by the following three lines: North 50° 12' 45" East, a distance of 153.13 feet to the southwesterly end of a stonewall;

Thence, North 67° 44' 30" East, by said stone wall, 127.47 feet to the northeasterly end of said stonewall.

Thence, North 72° 45' 45" East, a distance of 395.14 feet to the point of beginning.

Containing 25.726 acres.

The above described parcel is conveyed subject to drainage rights taken to the State of Maine as described in the layout and notice of taking recorded at said York County Registry of Deeds in Book 1414, Page 548.

The above courses refer to the 1956 Magnetic Meridian.

The sideline of the Old Pool Road is the apparent line.

Reference is made to a "Plan showing A Standard Boundary Survey Made For Samuel Serpico, Mary A. Barton and Philomene A. Center", dated January 24, 2000 and the accompanying report made by Dow & Coulombe, Inc.

Also conveying herewith all of the Grantor's right, title and interest in the premises conveyed to Joseph Serpico by deed of Blanche A. Labbee dated November 22, 1960 and recorded in the York County Registry of Deeds in Book 1450, Page 237, whether encompassed within the bounds of the above surveyed description or not.

Meaning and intending to convey a portion of the parcel of land described in a Deed of Distribution by the Personal Representative of the Estate of Joseph C. Serpico to the Grantors herein dated March 15, 1999 and recorded in the York County Registry of Deeds in Book 9362, Page 177.

WITNESS our hands and seals, this _____ day of _____, 2000.

DATED at Bidoeford, Maine this 17th day of Feby, 2000.

Wtinesses

[signature]	[signature] Samuel Serpico
to all	[signature] Florence Serpico
three	[signature] Harry B. Center II
	[signature] Philomene a. Center

BK 9904 PG 096

[signature] Paul J. Barton by [signature]
Paul J. Barton

to both Mary A. Barton by [signature]
Mary A. Barton

STATE OF MAINE
COUNTY OF York Feby 15, 2000

Then personally appeared the above named Samuel Serpico and acknowledged the foregoing instrument to be ~~their~~ his free act and deed.

Before me,

[signature]
Notary Public Atty-at-law
Richard H. Hull III

STATE OF MAINE
COUNTY OF York Feby 15, 2000

Then personally appeared the above named Paul A. Barton and acknowledged the foregoing instrument to be ~~their~~ his free act and deed, in his said capacity

Before me,

[signature]
Notary Public Atty-at-law
Richard H. Hull III

Return to.
Univ New England
11 Hills Beach Rd.
Biddeford, ME
04005

RECEIVED YORK S.S.
2000 FEB 18 A 9:24
ATTEST: Lois M. Muse
REGISTER OF DEEDS

5 pg

Whitten, Nan

From: Fishing Woes <fishingwoes@gmail.com>
Sent: Wednesday, August 20, 2025 4:51 PM
To: apmaine@ap.org; awells@mainebiz.biz; cfox@metln.org; desk@newscentermaine.com; dinamendros@gmail.com; dking@metln.org; donovan.lynch@newscentermaine.com; erussell@pressherald.com; ggraham@pressherald.com; josh@themainemonitor.org; kate@themainemonitor.org; lmccauley@mainemorningstar.com; news@bangordailynews.com; news@pressherald.com; newsdesk@sacobaynews.com; pvanallen@mainebiz.biz; randyseaver01@gmail.com; sean.a.murphy@charter.com; srichelieu@metln.org; ssharon@mainepublic.org; tvmail@wgme.com; wmtw@wmtw.com; micaela@themainemonitor.org
Subject: Mayor doubles down on corrupt UNE process
Attachments: Screenshot 2025-08-20 at 4.02.59 PM.png

Caution: This is an external email. Please take care when clicking links or opening attachments. When in doubt, contact the IT Department

The Mayor of Biddeford Martin Grohman just announced on Facebook that he has initiated proceedings to remove Roch Angers from the Biddeford Planning Board.

Mr. Angers was one of three Board members of the Board to express grave reservations about regulatory review of UNE's proposed pier on the Saco River.

Grohman and former city manager Jim Bennett took extraordinary measures in 2024 to make sure a Harbormaster certified by the State of Maine would never review UNE's application for the pier. Along with two other Planning Board members and many Biddeford taxpayers, Angers objected to the crippling of normal review and the exclusion of local knowledge of the river. He told the City Council two weeks ago that, "something seems fishy" about the process Grohman initiated.

The Mayor's retribution has been swift. He announced about an hour ago that, "I initiated removal proceedings for a Planning Board member..." (Screen grab of Facebook post attached.)

Grohman is expected to hang his hat on a formal complaint filed against Angers by retired federal judge Tim Black, a Biddeford Pool resident, formerly a resident of Cincinnati, Ohio, who owns an oceanfront home assessed at $4 million. At a Planning Board meeting in June, Black stridently lectured Board members to pay close attention to a memo written by the city attorney, who had argued strenuously that the Planning Board should not concern itself with critical issues like river depth, wind, other moorings in the area proposed for the pier, currents, silt build-up, ice flow, extreme storms, etc.

As he was lecturing the Planning Board, Black did not reveal his personal conflict of interest. Information online indicates that Black has been hired by UNE to teach a class this Fall entitled "A Just Society?" According to the course description "This course explores how, on a daily basis throughout the United States, courts and judges are expected to apply laws whose purpose is to create a society which is protected from crime and one in which citizen's individual rights are respected."

The irony of Grohman and Black teaming up to remove Angers from the Planning is astounding. ***It's a sad day for transparency at Biddeford City Hall.*** It's not known what the process will be to formally shut Mr. Angers up, but one thing is perfectly clear. We all owe Roch Angers a huge thank-you for having the guts to stand up for the people of Biddeford.

Link to Tim Black's course description: https://www.coursicle.com/une/courses/SOC/421/

Whitten, Nan

From: Fecteau, Roby
Sent: Thursday, August 21, 2025 4:31 PM
To: Alan Thibeault; Galbraith, David
Cc: Whitten, Nan
Subject: RE: RE: 2025.29 Site Plan/Conditional Use Staff Review Committee

Good Afternoon Alan.

For purposes of establishing setbacks I did not consider this a private street. So I allowed the 10 setback

RIGHT-OF-WAY
All land that includes public or private streets, state and federal highways, private ways (now called public easements), or public land reservations for the purpose of access, including utility rights-of-way.

STREET
An existing state, county, town or private right-of-way or a right-of-way dedicated for public use and shown upon a plan duly approved by the Planning Board, accepted by Council, and recorded in the York County Registry of Deeds or a right-of-way dedicated for public use and shown on a plan duly recorded in the York County Registry of Deeds prior to the establishment of the Planning Board; or roads historically in use and accepted by the City. The term "street" shall not include those ways which have been discontinued or abandoned.

Roby Fecteau
Director of Code Enforcement &
Emergency Management
City of Biddeford
205 Main Street Suite 104
Monday- Tuesday 7:00 am – 5:00 pm
Wednesday- Thursday 8:00 am- 4:00 pm
Friday- Closed

From: Alan Thibeault <athibeault@une.edu>
Sent: Thursday, August 21, 2025 3:36 PM
To: Galbraith, David <David.Galbraith@biddefordmaine.org>; Fecteau, Roby <Roby.Fecteau@Biddefordmaine.org>
Cc: Whitten, Nan <Nan.Whitten@Biddefordmaine.org>
Subject: RE: RE: 2025.29 Site Plan/Conditional Use Staff Review Committee

Caution: This is an external email. Please take care when clicking links or opening attachments. When in doubt, contact the IT Department

David and Roby, I noted that there was construction commencing on the Wermenchuk property at 2 Old Pool Road.

As I looked at the foundation excavation, it did not appear that it was in compliance with the required setbacks from "Other ROW", of 25' from the ROW, as noted in my communication below and identified in NOTE 5 on the attached plan. If I understand correctly, the building would need to be 30' from the property line, and 25' from the existing ROW. See attached.

Could you please advise if the plans were revised accordingly and that the future building will be located in compliance with the ordinance?

David, in review of this Conditional Use, were any of the other issues I noted below discussed?

Thanks
AT

From: Alan Thibeault
Sent: Monday, July 14, 2025 11:42 AM
To: Galbraith, David <David.Galbraith@biddefordmaine.org>
Cc: Whitten, Nan <Nan.Whitten@Biddefordmaine.org>
Subject: RE: 2025.29 Site Plan/Conditional Use Staff Review Committee

David, hope you enjoyed your time away. UNE received a Public Notification on the aforementioned Site plan/Conditional Use review at 2 Old Pool Road. I had a few questions related to the plan.

- UNE has a shared 10' x 100' Right of Way adjacent to the proposed "Duplex" on the NW corner of the lot. The setback identified on the plan appears to be less than 10', when the stated code is 25'.
- As the Jordan Family burial plot does not have a fence, I was curious how the boundary was established as, it directly relates to the setback of the proposed Townhouse. Is there a standard for this determination? I understand that the deed for the parcel excludes this area, but it not defined in the deed.
- It appears the entire stream channel is not included in the Stream Protection Zone, is that accurate and if so what are the setbacks from the stream channel not in the SP
- Related to Conditional use, I was curious about the plans for landscaping/buffer to the UNE parcels.

Thanks

Alan Thibeault
Vice President for University Operations
University of New England
207.602.2253 (Office)
207.468.9296 (Cell)

Whitten, Nan

From: Pier Review <unepierreview@yahoo.com>
Sent: Tuesday, September 2, 2025 7:01 PM
To: Randy Seaver; newsdesk@sacobaynews.com; desk@newscentermaine.com; wmtw@wmtw.com; tvmail@wgme.com; dinamendros@gmail.com; srichelieu@metln.org
Subject: Grohman suffers stinging defeat in Biddeford

Caution: This is an external email. Please take care when clicking links or opening attachments. When in doubt, contact the IT Department

Biddeford mayor Grohman suffers stinging defeat

(Biddeford, Maine) It took less than five minutes for Mayor Martin Grohman to fail in his bid to bounce longtime public servant Roch Angers from the planning board.

Beginning in 2024, Grohman led the city's regulatory scheme that made sure a Saco River pier proposed by the University of New England (UNE) was never reviewed or approved by a Harbormaster certified by the State of Maine.

At a city council meeting in early August planning board member Roch Angers charged there was "something fishy" about Biddeford's regulatory review of UNE's pier. The mayor then quickly acted to remove Angers from the planning board, placing the item on tonight's council agenda. Shortly after 6:00 p.m., Grohman asked the city council for a motion and a second to remove Angers. One councilor made the motion, but none of the other eight councilors volunteered a second.

The motion died, and Angers stays a member of the Biddeford Planning Board.

Community members remain up in arms about a claim by the city attorney that UNE's pier application was approved by a Harbormaster. It never was. The attorney's incorrect assertion helped win planning board approval for the university, despite contrary information provided to the city by the Maine Harbor Masters Association.

###

Whitten, Nan

From:	Pier Review <unepierreview@yahoo.com>
Sent:	Tuesday, September 2, 2025 3:40 PM
To:	Randy Seaver; srichelieu@metln.org; dinamendros@gmail.com; newsdesk@sacobaynews.com
Subject:	POLL RESULTS: Biddeford mayor, UNE pier
Attachments:	Survey August 2025.pdf

Caution: This is an external email. Please take care when clicking links or opening attachments. When in doubt, contact the IT Department

A brief online poll ran in the first half of August. Five questions, targeting Facebook users in Biddeford +10 miles radius.

The results are unedited. Apologies for any profanity that appear in the comments.

Q1 The regulatory process for UNE's proposed pier on the Saco River in Biddeford is over. The Biddeford Planning Board approved the application. Did you know this?

Answered: 108 Skipped: 1

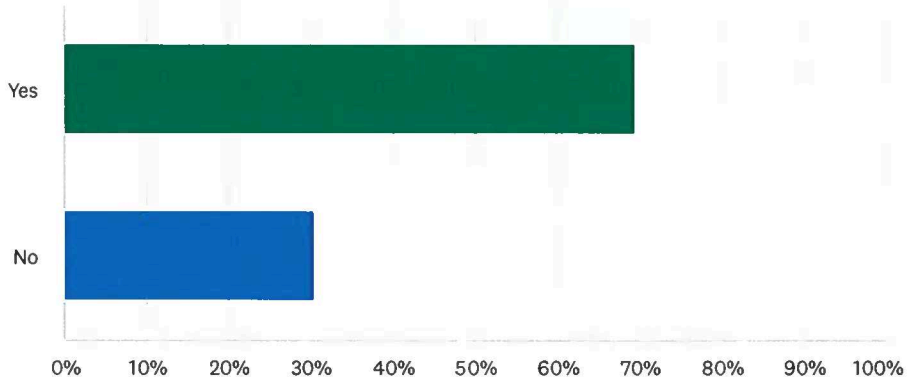

ANSWER CHOICES	RESPONSES	
Yes	69.44%	75
No	30.56%	33
TOTAL		108

Q2 No regulator --- local, state or federal --- ever got onto the river to look at critical factors like water depth, tidal action, wind, currents, etc. A harbormaster certified by the State of Maine never reviewed or approved the application. Did you know this?

Answered: 106 Skipped: 3

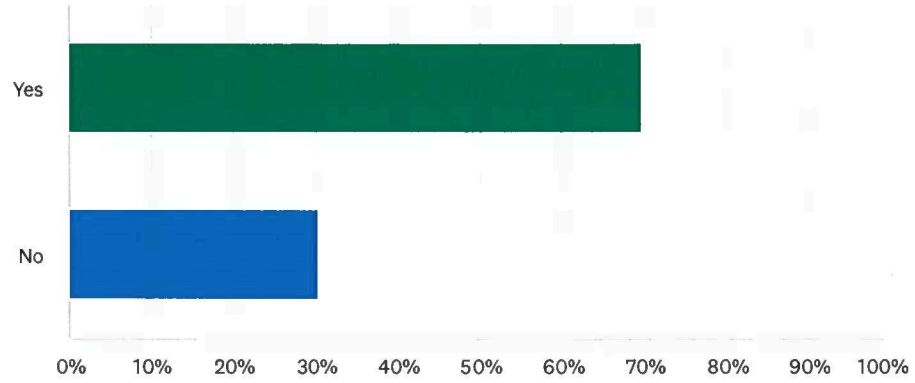

ANSWER CHOICES	RESPONSES	
Yes	69.81%	74
No	30.19%	32
TOTAL		106

Q3 Biddeford's mayor and former city manager Jim Bennett presided over the process in which pier location was never reviewed by a certified harbormaster. (As reported in a May news article, "Mayor defends city review of UNE pier proposal.") Are you aware of the mayor's role in helping UNE get its pier?

Answered: 108 Skipped: 1

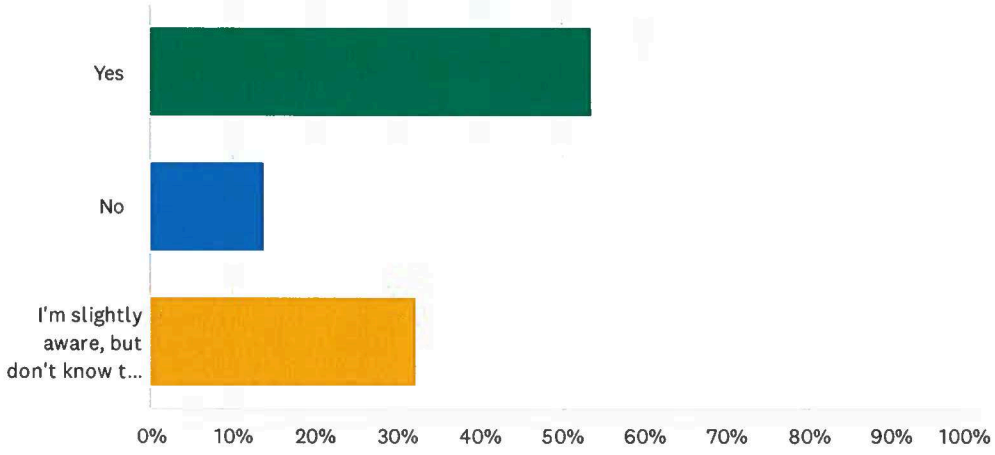

ANSWER CHOICES	RESPONSES	
Yes	53.70%	58
No	13.89%	15
I'm slightly aware, but don't know the whole story	32.41%	35
TOTAL		108

Q4 Has Biddeford's mayor been doing a good job?

Answered: 106 Skipped: 3

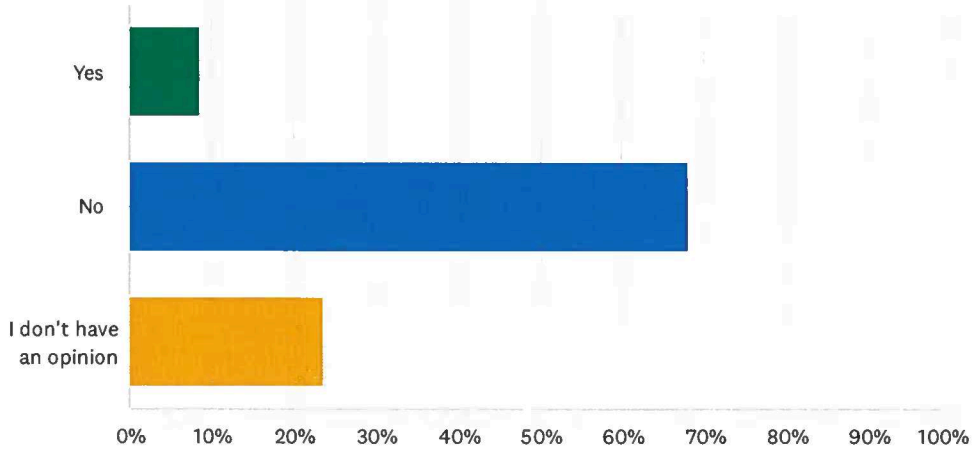

ANSWER CHOICES	RESPONSES	
Yes	8.49%	9
No	67.92%	72
I don't have an opinion	23.58%	25
TOTAL		106

#	COMMENTS?	DATE
1	The mayor is very much blinded by all the "FLASH" and does not care what is more beneficial to the community.	8/23/2025 5:48 PM
2	I'm skeptical	8/23/2025 1:20 AM
3	The previous city manager decided our harbormaster would be bias toward the community so he removed him. Two months later the city is removing the city manager. Some this just doesn't smell right and I don't believe the citizens of Biddeford have been well represented on this issue.	8/19/2025 4:47 PM
4	I live in Saco but this affects boats coming up the river to the ocean so I am concerned about impacts to fishery, boating, wildlife	8/17/2025 2:11 PM
5	The mayor should be working to protect those taxpayers who make a living on the working waterfront..	8/16/2025 1:11 PM
6	Mayor should consider harbor master opinion on this matter!	8/15/2025 11:17 PM
7	The harbormaster has sent his proposal with science backed points. UNE has not. This should not have gotten as far as it has.	8/13/2025 6:21 AM
8	He sold the property that Merck was on for one dollar to the developer that donated to his campaign	8/12/2025 10:35 AM
9	Mayor did what's best for UNE and screwed the residents	8/12/2025 4:44 AM
10	Do something to get rid of the street scum! The people are a direct public health hazard and make your city look like the shit hole reputation that it has!	8/11/2025 9:01 PM

11	He hasn't even returned email.	8/11/2025 10:11 AM
12	In this matter, no real transparency. Not good!	8/10/2025 11:53 AM
13	He sold the fisherman down the river	8/9/2025 3:16 PM
14	Doesn't appear to have been a good process	8/9/2025 11:59 AM
15	He gets 20 percent of the total cost per his contract	8/9/2025 8:00 AM
16	He and city attorney are not looking out for city or residents.... Both in UNE pockets	8/8/2025 9:36 PM
17	Local residents and mooring owners were systematically kept out of the review process until the Planning Board gave us the opportunity to speak. Unfortunately the City's counsel dominated the Planning Board process and the Chair provided the deciding vote. I have to question their relationship with UNE.	8/8/2025 9:16 PM
18	Blatant disregard of his office and loyalty to the people of Biddeford and Saco.	8/8/2025 8:36 PM
19	He is doing exemplary service for the community	8/8/2025 7:21 PM
20	The Harbormaster should have been reinstated to oversee the correct & legal process of UNE's Pier	8/8/2025 6:46 PM
21	This whole process is shady, dirty and unhanded. Is Grohman, Bennett or Center getting something out of this deal? Sure seems suspicious to me!	8/8/2025 6:44 PM
22	It is very apparent that this Mayor does not serve the tax paying residents of the City.	8/8/2025 6:11 PM
23	Mayor did not acknowledge the concerns citizens brought forward. He should have engaged everyone more	8/8/2025 6:02 PM
24	Waiting for the feds	8/8/2025 5:49 PM
25	Follow the money	8/8/2025 5:47 PM
26	The city council had NO authority to approve this project without the harbor master's approval.	8/8/2025 5:38 PM
27	No but other candidates are worse.	8/8/2025 5:32 PM
28	The entire process was flawed and the planning was DIRECTed by the planner and the city solicitor to Vote it in. THROW OUT THE Master Plan	8/8/2025 5:31 PM
29	Marty is too preoccupied with optics and helping those already in positions of power.	8/8/2025 5:06 PM

Q5 Does UNE respect input from local residents?

Answered: 108 Skipped: 1

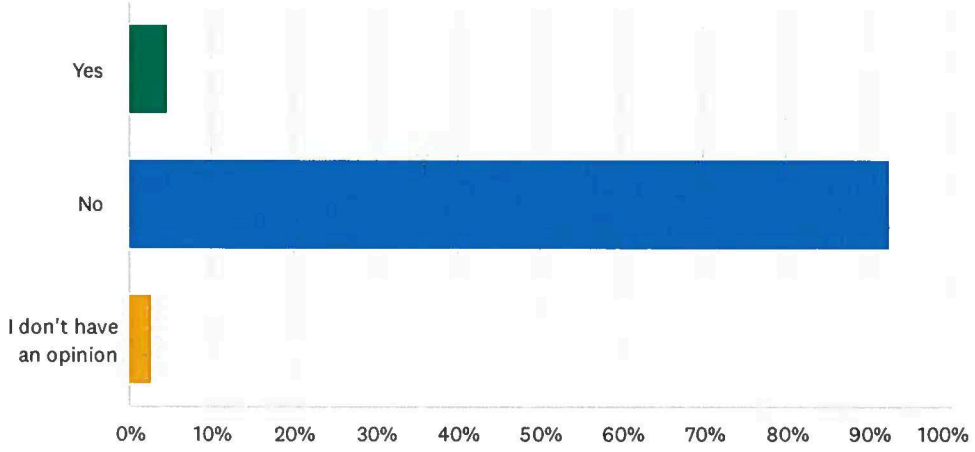

ANSWER CHOICES	RESPONSES	
Yes	4.63%	5
No	92.59%	100
I don't have an opinion	2.78%	3
TOTAL		108

#	COMMENTS?	DATE
1	UNE has no interest to please the citizens of Biddeford. They will do whatever they can to get their way.	8/23/2025 5:48 PM
2	Sometimes but not as often as they should. Otherwise they would have looked more closely at the alternative location and the effect the new pier will have on the fishing community & the mooring owners that will need to be moved. We all want the pier for UNE just in the alternative location. Another example is in regards to the pickleball courts they removed. We understand but with all the land they have and the popularity of PB with the community, its members and students, they should build 4 new PB courts. .	8/20/2025 10:22 AM
3	obviously not.	8/19/2025 4:47 PM
4	They don't care	8/16/2025 1:11 PM
5	They don't care about residents and what affect the pier has on other peoples moorings. They've hired a consultant/engineer who seems to be blind to common sense!	8/15/2025 11:17 PM
6	They also don't respect the science, which is interesting.	8/14/2025 7:03 AM
7	No taxes paid, no effort to try and give back to the city or even associate with the city. They want nothing to do with Biddeford besides furthering their agenda for growth	8/13/2025 6:21 AM
8	They should pay property taxes	8/12/2025 10:35 AM
9	UNE is a burden to Biddeford. They take all they can and really give nothing to the community	8/12/2025 10:19 AM
10	UNE gets what it wants. Always have, always will...	8/12/2025 7:09 AM
11	UNE only cares about themselves	8/12/2025 4:44 AM

12	They push their own agenda and don't care about Biddeford taxpayers at sll	8/12/2025 1:35 AM
13	The pier is a bad idea, anyone that knows anything about this thinks it's a bad idea, but Une is going to force it through anyway😡	8/11/2025 11:25 PM
14	Is fishing going to be allowed off this pier?? Are docking permits going to be needed to launch a small boat??	8/11/2025 11:25 PM
15	Not sure about other instances but not here.	8/10/2025 11:53 AM
16	Previous to this project, I would have said yes.	8/9/2025 11:59 AM
17	Very fishy review!	8/9/2025 9:01 AM
18	Only about them self	8/9/2025 8:00 AM
19	We love having UNE as a neighbor, but we're disappointed that they do and get anything they want and disregard concerned citizens input on matters that impact them. The process for the pier placement is a recent example.	8/9/2025 7:56 AM
20	With buried cars, overboard sewer, medical waste field, etc the college as an "environmental school" is total and complete joke!!	8/8/2025 9:36 PM
21	UNE had the deck stacked against the citizens of Biddeford.	8/8/2025 9:16 PM
22	I believe that UNE had hidden support and influence from senator King & Collins. I suspect Pingree also. Politics over people. The Saco River deserves better than this.	8/8/2025 8:36 PM
23	I live in the river and I have to jump through way more regulatory hoops for the minorest of changes to my property. I am extremely unhappy with the city in general but this is one of the biggest reasons.	8/8/2025 7:43 PM
24	They don't care that it's going to cost tax payers millions to dredge that river to get a 60' in at low tide let alone the pier will be out of the water at low tide	8/8/2025 7:00 PM
25	Only if it is what they want to hear and is in their favor	8/8/2025 6:46 PM
26	They have a total disregard for the local community based on current events.	8/8/2025 6:11 PM
27	It is unfortunate but UNE didn't give a rats ass about public input	8/8/2025 6:02 PM
28	question 2 is misleading	8/8/2025 5:53 PM
29	Tax them	8/8/2025 5:49 PM
30	They care only for themselves	8/8/2025 5:47 PM
31	They are only looking out for their own interests, with no respect for any local community.	8/8/2025 5:38 PM
32	UNE does not respect the shoreland, the marsh, the river or the Residents	8/8/2025 5:31 PM
33	Obviously not if they never offered their reasoning why the proposed pier placement by the boaters wouldn't work for them.	8/8/2025 5:06 PM

Whitten, Nan

From: Harry Center <hcenter@woodedlaw.com>
Sent: Wednesday, September 3, 2025 2:27 PM
To: Galbraith, David
Cc: Whitten, Nan
Subject: FW: Formal appeal of Planning Board's UNE decision

Caution: This is an external email. Please take care when clicking links or opening attachments. When in doubt, contact the IT Department

FYI, the email I just sent to Mr. Schafer.
Harry

Harry B. Center, II, Esq.
Woodman Edmands
234 Main Street
P.O. Box 468
Biddeford, Maine 04005
(207) 284-4581

CONFIDENTIALITY NOTICE: The contents in this message and any attachments are legally privileged and confidential and are intended only for the use of the designated recipient(s) stated above. If you are not the intended recipient, you may not review, copy or distribute either this message or any attachments. If you have received this message in error, please notify the sender immediately by telephone or reply e-mail and delete the entire message and any attachments. Thank you for your cooperation.

From: Harry Center
Sent: Wednesday, September 3, 2025 2:19 PM
To: 'Hills Beach John' <hillsbeachjohn@yahoo.com>; Truc.dever@biddefordmaine.org
Cc: Fecteau, Roby <roby.fecteau@biddefordmaine.org>; Ron Schneider <rschneider5@une.edu>
Subject: RE: Formal appeal of Planning Board's UNE decision

Mr. Schafer:

I cannot provide you with legal advice. I am copying Code Enforcement Officer Roby Fecteau with this email, as he generally handles appeals to the City's Zoning Board of Appeals.

I respectfully suggest that you immediately read the City's Ordinances on how to appeal a decision to the ZBA. It is not done by an email to the City Manager.

You may also contact Mr. Fecteau, and as you referenced in your email, the time to appeal the Planning Board's decision in this matter is running out. I believe the Code office has a form for filing an appeal and there is also a filing fee to be paid.

With all due respect, I will not tolerate any false statements about the City or myself somehow preventing an appeal to favor UNE or something like that. There is a process and anyone who believes they have standing to appeal the Planning Board's August 6, 2025 Final Decision must follow the City Ordinances.

Thank you,

Harry Center

Harry B. Center, II, Esq.
Woodman Edmands
234 Main Street
P.O. Box 468
Biddeford, Maine 04005
(207) 284-4581

CONFIDENTIALITY NOTICE: The contents in this message and any attachments are legally privileged and confidential and are intended only for the use of the designated recipient(s) stated above. If you are not the intended recipient, you may not review, copy or distribute either this message or any attachments. If you have received this message in error, please notify the sender immediately by telephone or reply e-mail and delete the entire message and any attachments. Thank you for your cooperation.

From: Hills Beach John <hillsbeachjohn@yahoo.com>
Sent: Wednesday, September 3, 2025 2:05 PM
To: Truc.dever@biddefordmaine.org
Subject: Formal appeal of Planning Board's UNE decision

Dear Ms. Dever,

First of all, welcome to Biddeford, and you certainly picked the very best time of year to start your new life in Maine! I know many, MANY people in the City are happy you are here and on the job. The very best of luck to you.

Under Part III of the City Code, Land Use Development, it appears that Article IX specifically defines the parameters and duties of the Board of Appeals.

Under Section 1, Establishment and Organization, the Mayor had a clear duty to appoint the Board. "Members of the Board of Appeals shall be nominated by the Mayor and confirmed by the Council."

Also, under Section 5, Appeals to the Board of Appeals, subsection A1, the code reads, "An appeal may be taken by any person aggrieved by a decision of the Building Inspector or Planning Board to the Board of Appeals within 30 days of such decision, and not otherwise, except that the Board, upon a showing of good cause, may waive the thirty-day requirement."

As an aggrieved party myself, and knowing that there are hundreds of other parties in this community aggrieved by the same decision, I would like this email to serve as formal notification to the City of Biddeford that I am filing an appeal of the decision made by the Biddeford Planning Board on August 6, 2025, approximately 28 days ago, a decision that granted approval to an application filed by the University of New England for a new marine research pier on the Saco River.

The basis of the Planning Board's decision was not rational, as specifically required by the Planning Board's own Code of Ethics. The decision is also not *perceived* in the community as rational, as is *also* required by the Planning Board's Code of Ethics. Members of the community will supply evidence during the course of the appeal.

Thank you for fielding my email, and if you need to transmit any relevant information to me, please do. I know that on September 6, which marks the expiration of 30 days since the Planning Board decision, that City Hall is closed.

Thanks very much for your time, and again, a warm welcome to you.

Sincerely,

John Schafer
Hills Beach, Biddeford

Whitten, Nan

From: Hills Beach John <hillsbeachjohn@yahoo.com>
Sent: Wednesday, September 3, 2025 2:05 PM
To: Dever, Truc
Subject: Formal appeal of Planning Board's UNE decision

Caution: This is an external email. Please take care when clicking links or opening attachments. When in doubt, contact the IT Department

Dear Ms. Dever,

First of all, welcome to Biddeford, and you certainly picked the very best time of year to start your new life in Maine! I know many, MANY people in the City are happy you are here and on the job. The very best of luck to you.

Under Part III of the City Code, Land Use Development, it appears that Article IX specifically defines the parameters and duties of the Board of Appeals.

Under Section 1, Establishment and Organization, the Mayor had a clear duty to appoint the Board. "Members of the Board of Appeals shall be nominated by the Mayor and confirmed by the Council."

Also, under Section 5, Appeals to the Board of Appeals, subsection A1, the code reads, "An appeal may be taken by any person aggrieved by a decision of the Building Inspector or Planning Board to the Board of Appeals within 30 days of such decision, and not otherwise, except that the Board, upon a showing of good cause, may waive the thirty-day requirement."

As an aggrieved party myself, and knowing that there are hundreds of other parties in this community aggrieved by the same decision, I would like this email to serve as formal notification to the City of Biddeford that I am filing an appeal of the decision made by the Biddeford Planning Board on August 6, 2025, approximately 28 days ago, a decision that granted approval to an application filed by the University of New England for a new marine research pier on the Saco River.

The basis of the Planning Board's decision was not rational, as specifically required by the Planning Board's own Code of Ethics. The decision is also not *perceived* in the community as rational, as is *also* required by the Planning Board's Code of Ethics. Members of the community will supply evidence during the course of the appeal.

Thank you for fielding my email, and if you need to transmit any relevant information to me, please do. I know that on September 6, which marks the expiration of 30 days since the Planning Board decision, that City Hall is closed.

Thanks very much for your time, and again, a warm welcome to you.

Sincerely,

John Schafer
Hills Beach, Biddeford

Whitten, Nan

From: Galbraith, David
Sent: Thursday, September 4, 2025 8:19 AM
To: Dever, Truc; Phinney, Brian
Cc: Whitten, Nan
Subject: FW: UNE's pier plan is dead
Attachments: Responses.pdf

FYI: Below is another email from Kyle Noble (aka Fishing Woes). Just wanted you to be aware that Mr. Noble's campaign continues.

From: Fishing Woes <fishingwoes@gmail.com>
Sent: Thursday, August 28, 2025 8:49 AM
To: jherbert1@une.edu; randyseaver01@gmail.com; srichelieu@metln.org; dinamendros@gmail.com; newsdesk@sacobaynews.com; wmtw@wmtw.com; desk@newscentermaine.com; tvmail@wgme.com; sean.a.murphy@charter.com
Cc: wowen@maineharbormasters.org; dgranata@maineharbormasters.org
Subject: UNE's pier plan is dead

Caution: This is an external email. Please take care when clicking links or opening attachments. When in doubt, contact the IT Department

The folks at UNE Pier Review sent out an email yesterday (below) revealing that Biddeford's mayor refuses to answer questions about the consequences of his pier review scheme, the one he hatched along with Jim Bennett. The news laid bare the mayor's glaring lack of transparency. But also quite clear is that UNE cannot build its pier in the location they proposed. Here's why:

1. The candidate survey discovered that the City Council does not intend to take an action forcing the relocation of legally-held moorings.
2. City Councilors are firm that Biddeford has a harbormaster in place, and he deals with moorings.
3. The harbormaster wrote recently, "I have no plans to remove or relocate any existing mooring."
4. The mooring owners are unified in their determination to keep their existing moorings.

UNE's pier proposal is dead in the water. It won't be built in the location they want, because that location is unavailable.

UNE's president, copied to this email, has been repeatedly asked, "*when, against whom, and on what legal* basis will you be filing litigation to bulldoze mooring owners out of the way?" Consistent with UNE's lack of transparency, he has refused to answer the question each time he's been asked.

But UNE's ivory tower dismissal of local concerns doesn't matter anymore. Given current circumstances, their pier proposal is dead.

---------- Forwarded message ---------
From: **Pier Review** <unepierreview@yahoo.com>
Date: Wed, Aug 27, 2025 at 11:23 AM
Subject: UNE pier scheme: Mayor hides from consequences
To: Maine Reporters
Cc: fishingwoes@gmail.com <fishingwoes@gmail.com>

Biddeford mayoral candidates Liam LaFountain and Norm Belanger have kindly provided detailed and thoughtful answers to 4 questions they were asked in early August:

1. In your opinion, will the current City Council schedule an agenda item before Election Day that calls upon city personnel to remove moorings so that UNE can begin construction this fall?
2. Will you support such a motion?
3. If you are elected as Biddeford's next Mayor and the legally-held moorings in question are not yet relocated, will you seek or support a Council motion to clear them out of the way so that UNE can begin building their pier?
4. If you feel these questions are not an accurate reflection of the process that will be necessary to relocate the moorings, can you explain what the process will be?

Mayor Martin Grohman and former city manager Jim Bennett made sure no Harbormaster certified by the State of Maine would review UNE's pier application to consider factors like wind, current, water depth, tidal flow, ice jams, etc. The Planning Board approved UNE's application, and a UNE spokesperson immediately announced the City has to now relocate the moorings. They want to begin construction this fall.

Grohman refused to answer the 4 questions. Just like his two opponents, he was originally asked on August 9th, and then given a reminder on August 20th. Candidates were asked to supply answers by the end of the day, August 24th. It's remarkable that the architect of this terrible City review process now refuses to answer questions about its consequences, but...that's the way things stand.

The replies from Councilor LaFountain and Councilor Belanger are attached for review. Their commitment to transparency and accountability is much appreciated.

Whitten, Nan

From:	Hills Beach John <hillsbeachjohn@yahoo.com>
Sent:	Thursday, September 4, 2025 2:51 PM
To:	Grohman, Martin
Cc:	Will Owen; dgranata@maineharbormasters.org
Subject:	Fw: FILED: appeal of Planning Board decision
Attachments:	Appeal Application.pdf; Appeal Documentation.pdf

Caution: This is an external email. Please take care when clicking links or opening attachments. When in doubt, contact the IT Department

----- Forwarded Message -----
From: Hills Beach John <hillsbeachjohn@yahoo.com>
To: Harry Center <hcenter@woodedlaw.com>
Cc: Truc Dever <truc.dever@biddefordmaine.org>; Randy Seaver <randyseaver01@gmail.com>
Sent: Thursday, September 4, 2025 at 02:37:20 PM EDT
Subject: FILED: appeal of Planning Board decision

Good afternoon, Harry.

I wanted to thank you for helping me out yesterday with important information and again, I'm sorry for having a hard time with the terminology on the city's website. I finally came to the correct understanding, and I did file the appeal with Roby Fecteau this afternoon and paid the required fee. The relevant documents are attached, please feel free to pass on to Mr. Schneider and UNE.

You'll notice that I filled out the application as "John Schafer & et. al." As an FYI, that's because I'm unlikely to be the captain on this effort. As you know, Mr. McCurry expressed an interest the other night, and I also heard from others in the community after the Council declined to remove Mr. Angers from the Planning Board. Several folks texted me, adamantly wanting this to go to appeal, so I was simply determined to take some action on their behalf before the deadline passed.

I had a great discussion with Roby. He told me that the ZBA hasn't met for three years, that it has all new members, and that they all need to receive training before this appeal can be heard. So I finally have a full understanding of the correct process, and I left his office with the impression that barring any complications, this appeal will be heard in early October. OK, that's all, thanks again for your help.

Sincerely,

JS

P.S. Ms. Dever, thank you as well for your responsiveness yesterday. I really appreciated it.

APPLICATION FOR VARIANCE OR APPEAL TO BOARD OF ZONING APPEALS

CITY OF BIDDEFORD, MAINE

NAME OF APPELLANT John Schafer, et. al.

MAILING ADDRESS 24 Sky Harbor Drive

CITY OR TOWN Biddeford

TELEPHONE 207-294-2410 MAP N/A LOT N/A ZONE N/A

NAME OF OWNER University of New England

PROPERTY LOCATION Saco River

The undersigned requests that the Board of Appeals consider one of the following:

___ **Administrative Appeal** Relief from decision, or lack of decision, of the Code Enforcement Officer or Planning Board in regard to an application for a permit. The undersigned believes that (check one).

___ an error was made in the denial of the permit.
___ the denial of the permit was based on misinterpretation of the ordinance.
___ there has been a failure to approve or deny the permit within a reasonable period of time.
___ other Approval of UNE's proposed pier was illegally granted by the Planning Board on August 6, 2025. Members knew that a certified Harbormaster never reviewed the application, as required by ordinance. Other omissions contributed to Members knowing UNE's application was incomplete.

Please explain in more detail the facts surrounding this appeal (please attach a separate piece of paper). You should be as specific as possible so that the Board of Appeals can give full consideration to your case.

___ **Variance**

a. Nature of Variance: Describe generally the nature of the variance _____

In addition, a sketch plan of the property must accompany this application showing dimensions and shape of the lot, the size and locations of existing buildings, the locations and dimensions of proposed buildings or alterations, and any natural or topographic peculiarities of the lot in question.

b. Justification of Variance: In order for a variance to be granted, the appellant must demonstrate to the Board of Appeals that the strict application of the terms of the Zoning Ordinance would cause undue hardship. The following criteria must be met before the Board of Appeals can find that a hardship exists. Please explain how our situation meets each of these criteria listed below.

1. The land in question cannot yield a reasonable return unless a variance is granted.

2. The need for a variance is due to the "unique circumstances of the property (not desired use or personal hardship) and not to the general conditions in the neighborhood.

3. The granting of a variance will not alter the essential character of the locality.

4. The hardship is not the result of action taken by the applicant or a prior owner.

5. Relief, if granted, would not cause substantial detriment to the public good, or impair the purposes and intent of this Ordinance.

Other: (Details supplied on a separate sheet of paper.)

I certify that the information contained in this application and its supplement is true and correct.

Date _____ _____

Evidence Summary

Appeal of Decision by Biddeford Planning Board August 6, 2025 to approve
Application by University of New England
For a proposed marine research pier on the lower Saco River

Presented by Biddeford resident John Schafer
& additional aggrieved parties
September 4, 2025

Basis for appeal

1. The Biddeford Planning Board approved UNE's application knowing that Member Larry Patoine had requested a copy of the application that the university filed with the National Institute of Standards & Technology (NIST.) The university did not honor Mr. Patoine's request, therefore the Board knew the application was incomplete.
2. An engineer with the U.S. Army Corps of Engineers recommended that her colleagues make sure that Biddeford's Harbormaster, Paul Larivierre, was "OK" with the latest design and location of UNE's proposed pier. The Board knew that the Corps never secured approval from Biddeford's Harbormaster.
3. The Board knew that Biddeford's harbor ordinance requires that a Harbormaster approve an application for a pier.
4. The city attorney emphatically advised the Planning Board several times that a Harbormaster had approved UNE's application.
5. The city attorney continues to insist that Wayne Duffett, P.E. is the Harbormaster who approved the application.
6. Mr. Duffett is not a Harbormaster.
7. It must be assumed that each Planning Board Member thoroughly reviewed all material submitted by the public, and listened carefully to all public testimony, as required by the Board's Code of Ethics.
8. Ample evidence was provided to the Board proving that Mr. Duffett is not a Harbormaster.
9. The Board knew that Biddeford's own ordinance requires that the City's Harbormaster must be a voting resident of five years, must have five years of marine experience and at least two on the ocean, and must get training annually from the Maine Harbor Masters Association.
10. The Board knew that the Maine Harbormasters Association confirmed that Mr. Duffett is not a Harbormaster.

11. The Board was aware that Mr. Duffett was hired by the city manager to review paperwork. His duties did not include reviewing or approving the location of the proposed pier, a function normally performed by a Harbormaster.
12. The Board knew that the Maine Harbor Master Association had informed the City that the plan to hire a "Harbormaster pro tem" is "inconsistent with prevailing law."
13. The Board knew that the City ignored the advice of the Association, and proceeded with hiring Mr. Duffett anyway, as a poor substitute for hiring a certified Harbormaster.
14. The Board had ample evidence, through submitted documents and verbal public testimony submitted *directly* to the Board, that the community knows Mr. Duffett is not a Harbormaster.
15. Thus the Board knew the community does not accept as rational the city attorney's adamant claim that Mr. Duffett is a Harbormaster.
16. The Board knew that according to its own Code of Ethics, "The Planning Board has the responsibility to ensure that the decision-making process it applies to any issue…is not only rational, but is also perceived as rational."

Conclusion

Members who voted to approve UNE's application could do so in one of two ways. First, they could approve by concluding that the city attorney did not make a mistake, and therefore Mr. Duffett is indeed a Harbormaster who approved the design and location of UNE's pier, as the city attorney (an authority figure) claimed. Or, second, Members could approve by intentionally choosing to ignore all evidence that Mr. Duffett is not a Harbormaster, and by ignoring all evidence that city ordinance requires Harbormaster approval for UNE's proposed pier.

Either scenario leads to a conclusion that the Planning Board's decision was improper, and should be vacated.

Formal Requests

The Chairman of the Zoning Board of Appeals, an honorable man, recused himself from the review of UNE's application at the Saco River Corridor Commission. It seems logical that he must also recuse himself from consideration of this appeal. As well, the city attorney remains adamant that Wayne Duffett, P.E. is a Harbormaster. This appeal rests upon the fundamental contention that he is not. The firm of Woodman Edmands normally represents Biddeford's various boards and commissions, and the city

attorney has a vested interest in a conclusion that proves his legal advice was correct. Should the Zoning Board of Appeals wish to be advised by legal counsel during this appeal, it seems reasonable that it should select a firm other than Woodman Edmands to perform that function. Thank you for considering these requests.

Supporting Documentation

All the following documents were submitted to the Planning Board, and this appeal pre-supposes that each Member diligently reviewed and understood their meaning.

1. ***The Planning Board knew the U.S. Army Corps of Engineers should have followed up to get an OK from Biddeford's Harbormaster:***

From: To: Cc: Subject: Date: Stukas, Heather CIV USARMY CENAE (USA)
Maaninen, Michael A CIV USARMY CENAE (USA)
Olmstead, Peter D CIV USARMY CENAE (USA)
NAE-2024-01623-UNIVERSITY OF NEW ENGLAND-Pier and floats
Tuesday, June 25, 2024 9:24:00 AM
Good Morning Mike,

FYI – This project has been ongoing, so the PM who ultimately assign, they should do a review of
previous authorization for the project. – I believe there are older ORMs associated with the project.
Nothing has been issued to my knowledge.

Project background – this project in the past has been dislike by Biddeford Harbormaster, Paul Lariviere, due to navigation concerns, - it seems like they have been communicating with the Biddeford Harbormaster and has modified their concept to incorporate his concerns.
Whoever is assigned my recommendation to follow-up with the Biddeford Harbormaster to ensure the new concept is acceptable.

Paul Lariviere - paul@southernmainemarine.com

The Saco River does have FNP – adjacent to this location just FYI.

Heather S. Stukas
Project Manager
U.S. Army Corps of Engineers
New England District,
Maine Project Office
442 Civic Center Dr. Suite 350
Augusta, ME 04330
Office (207)623-8367 ext. 8 or (978)318-8678
Cell (207)272-5219

2. *The Planning Board knew what the City's ordinance requires of a Harbormaster:*

☐ Sec. 74-51 **Criteria.**
[Ord. of 2-17-1998(2); Ord. No. 2007.11, 3-6-2007]

The criteria for the Harbormaster is as follows:

(1) Must be a voting resident of five years;

(2) Must have at least five years of marine experience with a minimum of two years on the ocean; and

(3) Must attend annual Maine Harbormasters Association training seminar.

3. *The Planning Board knew that contrary to what the city attorney continues to argue, Wayne Duffett, P.E. is not a Harbormaster:*

From: Maine Harbor Masters Assoc. Info <info@maineharbormasters.org>
Sent: Tuesday, June 17, 2025 1:14 PM
Subject: Inquiry

The Maine Harbor Masters Association has no record of Mr. Wayne Duffett attending Basic Harbor Master Training and Certification.

Thanks MHMA Board of Directors.

Thanks,

Maine Harbor Masters Assoc.
PO Box 1515
Scarborough, ME 04070

info@maineharbormasters.org
https://www.maineharbormasters.org/home

STATE OF MAINE
HARBOR MASTER'S
ASSOCIATION

4. The Planning Board knew the City had been advised that its plan for regulatory review of UNE's pier was incorrect:

From: Daryen Granata <dgranata@maineharbormasters.org>
Sent: Tuesday, June 4, 2024 11:34 AM
To: james.bennett@biddefordmaine.org
Subject: Harbor Master Protem question

Dear Mr. Bennett:

Thank you for reaching out to the Maine Harbormasters Association concerning the question of a 'Harbormaster Protem' for the City of Biddeford. Our Board is unaware of any precedent for such a position in the Association's jurisdiction. Review of the relevant state law, specifically Title 38, Chapter 1 of the Maine Revised Statutes, contains no provision regarding such a position. To do so would be inconsistent with the explicit state law. Harbormasters must be appointed for a term of not less than one year and are subject to all the duties and liabilities of that office as prescribed by state law, municipal ordinances and regulations adopted by the municipal officers, municipal harbor commissioners, municipal port authorities or other such bodies empowered to regulate municipal harbors.

I understand that the genesis for your inquiry centers around a pending proposal by the University of New England to construct some form of waterfront access. Section 74-35b of the Biddeford Harbor Ordinance states, "permission for the construction of any new wharf or pier within the jurisdictional limits of the City shall not be granted without approval of the Harbormaster, along with federal, state and local governing authorities." Assuming the harbormaster is unable to perform this duty for whatever reason, it usually falls to the assistant harbormaster to perform said duties. If there is no assistant or if the assistant also is unable to perform this duty, it is not uncommon for a Harbor Commission to perform this function. In fact, Section 74-62a of your harbor ordinance makes it very clear that the Biddeford Harbor Commission "...shall meet to hear appeals of decisions made by the Harbormaster and to act as an advisory vehicle for any construction from the mean high-water line down...".

The Maine Harbormasters Association discourages you from pursuing a 'protem' harbormaster as it is inconsistent with the prevailing law. Instead, we recommend that you work within the review hierarchy laid out in your harbor ordinance.

Thank you for contacting us for guidance in this matter. Please contact me if you have further questions.

Thanks,

Daryen Granata
Vice President & Training Coordinator

Maine Harbor Masters Assoc.
PO Box 1515
Scarborough, ME 04070

5. The Planning Board knew that the State of Maine requires specific training for a Harbormaster, training that Mr. Duffett does not have:

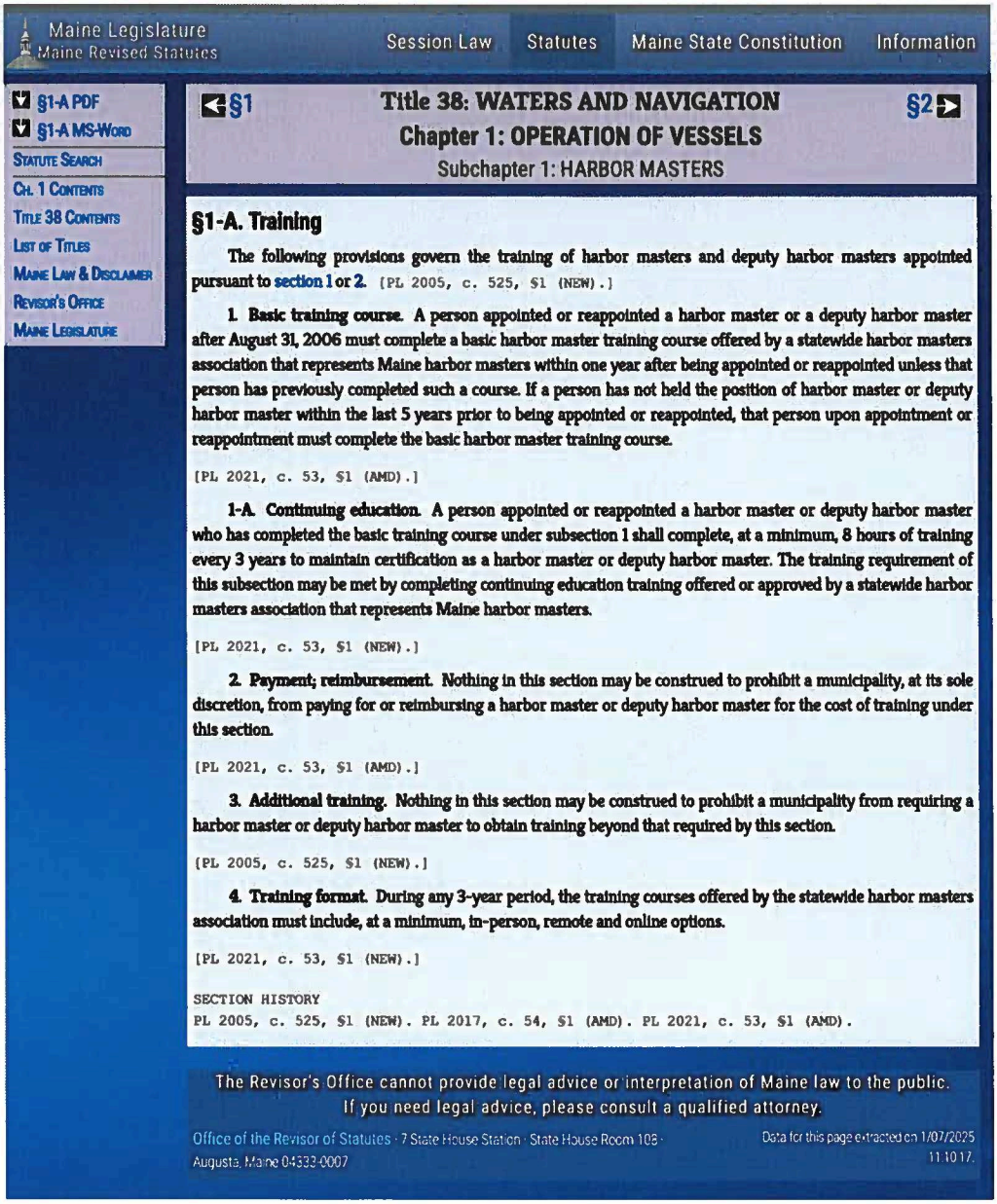

Maine Legislature
Maine Revised Statutes

Session Law | Statutes | Maine State Constitution | Information

§1-A PDF
§1-A MS-Word
Statute Search
Ch. 1 Contents
Title 38 Contents
List of Titles
Maine Law & Disclaimer
Revisor's Office
Maine Legislature

§1 **Title 38: WATERS AND NAVIGATION** §2
Chapter 1: OPERATION OF VESSELS
Subchapter 1: HARBOR MASTERS

§1-A. Training

The following provisions govern the training of harbor masters and deputy harbor masters appointed pursuant to section 1 or 2. [PL 2005, c. 525, §1 (NEW).]

1. Basic training course. A person appointed or reappointed a harbor master or a deputy harbor master after August 31, 2006 must complete a basic harbor master training course offered by a statewide harbor masters association that represents Maine harbor masters within one year after being appointed or reappointed unless that person has previously completed such a course. If a person has not held the position of harbor master or deputy harbor master within the last 5 years prior to being appointed or reappointed, that person upon appointment or reappointment must complete the basic harbor master training course.

[PL 2021, c. 53, §1 (AMD).]

1-A. Continuing education. A person appointed or reappointed a harbor master or deputy harbor master who has completed the basic training course under subsection 1 shall complete, at a minimum, 8 hours of training every 3 years to maintain certification as a harbor master or deputy harbor master. The training requirement of this subsection may be met by completing continuing education training offered or approved by a statewide harbor masters association that represents Maine harbor masters.

[PL 2021, c. 53, §1 (NEW).]

2. Payment; reimbursement. Nothing in this section may be construed to prohibit a municipality, at its sole discretion, from paying for or reimbursing a harbor master or deputy harbor master for the cost of training under this section.

[PL 2021, c. 53, §1 (AMD).]

3. Additional training. Nothing in this section may be construed to prohibit a municipality from requiring a harbor master or deputy harbor master to obtain training beyond that required by this section.

[PL 2005, c. 525, §1 (NEW).]

4. Training format. During any 3-year period, the training courses offered by the statewide harbor masters association must include, at a minimum, in-person, remote and online options.

[PL 2021, c. 53, §1 (NEW).]

SECTION HISTORY
PL 2005, c. 525, §1 (NEW). PL 2017, c. 54, §1 (AMD). PL 2021, c. 53, §1 (AMD).

The Revisor's Office cannot provide legal advice or interpretation of Maine law to the public. If you need legal advice, please consult a qualified attorney.

Office of the Revisor of Statutes · 7 State House Station · State House Room 108 · Augusta, Maine 04333-0007

Data for this page extracted on 1/07/2025 11:10:17.

Continue to last page...

6. **The Board knew that even the City acknowledges on its website that Mr. Duffett was not hired to perform the duties of a Harbormaster, that is, reviewing the design and location on the Saco River for UNE's proposed pier:**

19. **Was the firm hired to "rubber stamp" UNE's preferred site?**
The firm will not be selecting or commenting on the site of the pier. The work of the consultant is merely to determine completeness of application.

LAFOUNTAIN

- To: me · Fri, Aug 22 at 10:18 PM
- Dear UNE Pier Review,

Thank you for your inquiry and the chance to address the valid concerns you and others have raised about this process. As a candidate for Mayor, I am responding because these are reasonable questions, and Biddeford residents deserve to know how those seeking elected office may approach such consequential decisions. Please see my responses below.

Q1: In your opinion, will the current City Council schedule an agenda item before Election Day that calls upon city personnel to remove moorings so that UNE can begin construction this fall?

A1: I don't plan on introducing such a measure, and I have not heard that any of my fellow Councilors want to schedule such an agenda item before Election Day. As far as I am aware, there has been no indication to date that the Council intends to direct the removal of legally-held moorings this fall.

Q2: Will you support such a motion?

A2: I will not commit to supporting or opposing such a motion without first reviewing the specific language of any Council Order and understanding the legal, environmental, and community implications. Any decision would require careful consideration and meaningful input from those most directly affected.

Q3: If you are elected as Biddeford's next Mayor and the legally-held moorings in question are not yet relocated, will you seek or support a Council motion to clear them out of the way so that UNE can begin building their pier?

A3: If elected, I would not bring forward such a motion on my own. First, we have a harbormaster in place whose duty it is to deal with moorings. Second, should a future Council bring such a motion forward, I would work to see that before any item reaches the Council agenda, it is properly vetted, and once it is there, that our elected officials have the necessary information, expert guidance, and access to those with local knowledge of the river to make an informed decision. I would also prioritize ensuring the public has a clear opportunity to provide feedback to help guide such a decision.

Q4: If you feel these questions are not an accurate reflection of the process that will be necessary to relocate the moorings, can you explain what the process will be?

A4: The process to date has left many residents disappointed, as it did not fully reflect the experience and knowledge of those most familiar with our river. Going forward, we should expect decisions to be transparent, with elected and appointed officials having access to both technical expertise and the local knowledge that comes from living and working on the waterways. That balance is what will give the public confidence that such important matters are being decided responsibly and in the best interest of Biddeford residents.

Thank you again for the opportunity to share my perspective on this matter. I remain committed to making decisions with transparency, accountability, and respect for local knowledge in the service of Biddeford residents.

Best,
Liam

--
Liam LaFountain
Candidate for Mayor
City of Biddeford
https://www.lafountainformayor.com/



BELANGER

- To: me · Sat, Aug 23 at 1:09 PM

Message Body

First, I want to make clear that my responses reflect my personal opinion and are not to be construed as reflecting the position of the City or even my position as a City Councilor. Given that some of these issues could end up being the topic of subsequent lawsuits, they should not in any way be interpreted as binding the City in any way

In your opinion, will the current City Council schedule an agenda item before Election Day that calls upon city personnel to remove moorings so that UNE can begin construction this fall? This question assumes that the City Council has authority over the placement and removal of moorings. I don't believe that is the case. Generally, the Council does not have authority over the administration of the duties assigned to City staff, including the Harbormaster.

Will you support such a motion? Since it is not within our authority, I would not support such an agenda item.

If you are elected as Biddeford's next Mayor and the legally-held moorings in question are not yet relocated, will you seek or support a Council motion to clear them out of the way so that UNE can begin building their pier? This question assumes that mooring permits come with a legal right to continue at their current location. I would want a legal opinion on what rights are associated with a mooring permit. I could not support a motion to remove any legal rights associated with a mooring permit without a careful weighing of all the competing legal interests and the repercussions to the City. Any legal rights in the moorings need to be understood and carefully considered before any decision by the City to remove the moorings.

If you feel these questions are not an accurate reflection of the process that will be necessary to relocate the moorings, can you explain what the process will be? I would not expect that the decision of relocating the moorings would come before the Council. It is my understanding that the placement and removal of moorings have always been managed by appropriate staff and are not the type of policy issue I would expect to come before the Council. If it were to legally come before the Council, I want to make sure that I'm fully informed of all the facts and issues surrounding the decision so that I can make a decision that takes into account the best interests of the City, the mooring users and the other residents of the City.

Norman R. Belanger (he/him)
Councilor Ward 6

NOTICE: Under Maine's Freedom of Access (Right to Know) Law, documents, including emails, in the possession of public officials about City business are classified as public records. This means if anyone asks to see them, we are required to provide them. There are very few exceptions. We welcome citizens' comments and want to hear from our constituents, but please keep in mind that what you write in an email is not private and could show up in the media.

From: Pier Review <unepierreview@yahoo.com>

Whitten, Nan

From: Dever, Truc
Sent: Monday, September 15, 2025 7:20 PM
To: Keith Richard
Cc: Center, Harry; Fecteau, Roby; Whitten, Nan; Sandra Guay; Grayson Szczepaniak
Subject: RE: Accusations by John Schafer

Hello Keith,
Thank you for your email addressing the allegations of conflicts outlined by Mr. Schafer. I should have a decision on how the City would like to proceed by Wednesday.
I'll be back in touch soon.
All the best,

Truc Dever, MPA
City Manager
City of Biddeford
(207) 284-9313
truc.dever@biddefordmaine.org

From: Keith Richard <krichard@archipelagona.com>
Sent: Monday, September 15, 2025 12:26 PM
To: Dever, Truc <truc.dever@biddefordmaine.org>
Cc: Center, Harry <hcenter@woodedlaw.com>; Fecteau, Roby <Roby.Fecteau@Biddefordmaine.org>; Whitten, Nan <Nan.Whitten@Biddefordmaine.org>; Sandra Guay <sguay@archipelagona.com>; Grayson Szczepaniak <gszczepaniak@archipelagona.com>
Subject: Re: Accusations by John Schafer

Caution: This is an external email. Please take care when clicking links or opening attachments. When in doubt, contact the IT Department

City Manager Dever,

I received a copy of Mr. Schafer's email of yesterday alleging a conflict. While we do not think there is a disqualifying conflict, whether the City wants to proceed with the representation is for the City to decide. We want to make sure that whatever you choose to do, that it is an informed decision.

Archipelago does not and has never represented UNE. I have asked around and we have no written record of speaking with Mr. Schafer or anyone affiliated with him (I am not aware of any named coalition) about the UNE pier. Sandy Guay does recall that a phone call inquiry came in through the firm's receptionist about opposing the UNE pier but we declined the matter before our receptionist or anyone else had a substantive conversation with that person because we were in conversations at that time with an individual about joining the firm (that ultimately did not transpire) and while not a direct conflict, we were concerned that it could become an issue. We never represented the opposition group nor did we learn any confidential information from the interaction that would disqualify our firm from this current

representation. We routinely screen and decline matters at an early stage to avoid conflicts problems like this.

Our permitting associate Sophia King did speak with Mr. Schafer in a Zoom call through her professor when she was still a student in the spring. The call was about sedimentation and soils in the Hills Beach area and Sophia was invited to participate in the call because she had researched and written about the subject. The UNE pier was not part of that research or discussion. Based on my conversation with Sophia this morning, that interaction in another unrelated context does not create a conflict.

The appeal and pier issue fall squarely within our focus and expertise in municipal law and conflicts over coastal and marine resources. We founded this firm with the goal to position ourselves to help resolve those conflicts. Some of our staff (Sophia et al.) have degrees that are specific to our area of focus and expertise. It just so happens that UNE is the only university in Maine that offers a marine affairs degree. Our firm has not donated to UNE and I'm not aware we received any direct referrals from the university. We hire their graduates, but that does not mean that we can't be neutral and impartial in advising the Board of Appeals. Maine is a small state and even smaller legal community. These types of prior interactions and relationships arise fairly often and rarely require recusal or disqualification.

My goal in advising the Board of Appeals is to provide procedural guidance to the board to enable them to make their own independent conclusions and decision, so long as they remain within the bounds of the law. Whether they ultimately agree or disagree with the Planning Board's decision—and the UNE pier—is not my concern. I'm focused on ensuring that the hearing is conducted fairly and lawfully.

A few other disclosures about our connections with UNE: Attorney Ben Ford has guest lectured a marine affairs class there each year and previously served on an advisory board for the Artic program. He represented the former provost but after that person had left UNE. Our summer intern last summer from Maine Law, Bella Dube, was a UNE grad as well.

Lastly, the fact that Sandy Guay worked at Woodman Edmands approximately half a decade ago, and even then never worked on any issues concerning UNE, does not create a conflict. In addition, there appears to be no requirement in the City Charter that would require Council action to appoint what is commonly referred to as a conflict counsel, as opposed to the hiring of the City Solicitor. This firm has by agreement acted as conflict counsel in many municipalities, and retaining conflict counsel has consistently been the role of the City Manager or Administrator.

I would be happy to answer any questions you have.

Best,

Keith

Keith P. Richard, Esq., Principal
Archipelago
1 Dana Street
Portland, ME 04101
(207) 558-0102

Archipelago
Law • Science • Policy

From: Harry Center <hcenter@woodedlaw.com>
Sent: Monday, September 15, 2025 9:48 AM
To: Keith Richard <krichard@archipelagona.com>
Subject: Accusations by John Schafer

Keith

I'm cutting and pasting below, an email that John Schafer sent to the City Manager, with "cc" to the media and a bunch of Harbor Master people.

As we both know, only the Client can raise an issue with an attorney's employment and any potential conflicts. As a adverse party, Schafer cannot raise this issue to disqualify you pursuant to our Rules of Professional Responsibility. However at the end of the day, this is between you and the City. My only concern is whether some pier opponents meeting with your firm causes a problem.

Dear Manager Dever,

I am one of many Biddeford residents who has objected to a distinct lack of transparency and apparent conflicts of interest in Biddeford's regulatory review of UNE's proposed marine research pier on the Saco River. On behalf of those residents, I recently filed an appeal of the Planning Board decision to approve UNE's application.

I have been informed that Attorney Keith Richard of Archipelago will be representing the City of Biddeford Zoning Board of Appeals, as the ZBA takes up the appeal. Roby Fecteau, the ZBA's staff liaison, was copied to the email that informed me of this news.

Nobody in our group recalls seeing a recent City Council agenda item authorizing the City to hire Archipelago. Was this a public process?

Many months ago our coalition, via an acquaintance of one of our members, asked about hiring Archipelago to represent Biddeford citizens as UNE's application headed toward Planning Board review. Archipelago was compelled to decline the invitation due to a conflict of interest. Our logical conclusion was that one or more of the firm's attorneys had previously had UNE as a client. Please consider the following:

- ***A member of our coalition met one of Archipelago's new employees a few months ago, Sophia King. She is a Permitting Associate at the firm, having recently graduated from UNE with a B.A. in Marine Affairs.***
- ***Elias Young is a Research Analyst and Paralegal at the firm. He is a recent graduate of the Marine Affairs program at UNE.***

- ***Grayson Szczepaniak is an Attorney at the firm. She was copied to the email that Attorney Richard sent me and thus is involved somehow in the appeal. She is a graduate of the Marine Science program at UNE.***
- ***A co-founder of the firm, Attorney Sandra Guay, was a law partner of the City Solicitor at Woodman Edmands for many years, before she founded Archipelago. The City Solicitor's ardent contention that a Harbormaster approved UNE's application is the central issue in the appeal. The question of cronyism will inevitably surface.***

The Planning Board has a Code of Ethics which states, "The Planning Board has the responsibility to ensure that the decision-making process it applies to any issue...is not only rational, but is also perceived as rational." I would assume that the ZBA has a similar Code designed to prevent any appearance of a conflict.

I know for certain, Manager Dever, that you just moved to Maine. Not having had even the slightest chance to get to know the state or the professional players in the business world, there is no conceivable way that you are the person who made the decision to hire Archipelago to represent the ZBA.

Nevertheless, somebody did make that decision, and it's almost inconceivable that somebody working for the people of Biddeford thought this would be a wise choice. Given the extremely controversial nature of UNE's application and the lack of transparency that has plagued the Mayor's review process for more than a year and a half, the utmost care was required at this point in time to select an attorney to advise the ZBA during the appeal.

I happen to know that Archipelago is a fine and honorable firm. I'm casting no aspersions upon them whatsoever. However, the distinct flow of new employees to Archipelago from UNE's marine sciences programs makes Archipelago exactly the wrong choice to advise on an appeal involving UNE's marine sciences program. Surely the city's primary objective in the appeal is to restore trust and faith in Biddeford's city government, and confirm that its regulatory processes are fair and impartial.

I noticed in particular that even though you are the new city manager, you were omitted from the distribution list informing us of Attorney Richard's assignment. I thought I should bring this matter to your attention, given the recent media stories profiling you and your priorities. I know for sure that this community is relying upon you to help restore trust and faith in Biddeford's city government, after two years in which our faith and trust have been sorely tested.

Thank you very much for allowing me to pass along my thoughts about this matter.

John Schafer
Hills Beach, Biddeford

Harry B. Center, II, Esq.
Woodman Edmands

234 Main Street
P.O. Box 468
Biddeford, Maine 04005
(207) 284-4581

CONFIDENTIALITY NOTICE: The contents in this message and any attachments are legally privileged and confidential and are intended only for the use of the designated recipient(s) stated above. If you are not the intended recipient, you may not review, copy or distribute either this message or any attachments. If you have received this message in error, please notify the sender immediately by telephone or reply e-mail and delete the entire message and any attachments. Thank you for your cooperation.

Whitten, Nan

From: Galbraith, David
Sent: Monday, September 15, 2025 7:08 AM
To: Whitten, Nan
Subject: FW: yet another appearance of a conflict of interest

FYI:

From: Hills Beach John <hillsbeachjohn@yahoo.com>
Sent: Sunday, September 14, 2025 12:44 PM
To: Dever, Truc <truc.dever@biddefordmaine.org>
Cc: Randy Seaver <randyseaver01@gmail.com>; Will Owen <wowen@maineharbormasters.org>; dgranata@maineharbormasters.org
Subject: yet another appearance of a conflict of interest

Caution: This is an external email. Please take care when clicking links or opening attachments. When in doubt, contact the IT Department

Dear Manager Dever,

I am one of many Biddeford residents who has objected to a distinct lack of transparency and apparent conflicts of interest in Biddeford's regulatory review of UNE's proposed marine research pier on the Saco River. On behalf of those residents, I recently filed an appeal of the Planning Board decision to approve UNE's application.

I have been informed that Attorney Keith Richard of Archipelago will be representing the City of Biddeford Zoning Board of Appeals, as the ZBA takes up the appeal. Roby Fecteau, the ZBA's staff liaison, was copied to the email that informed me of this news.

Nobody in our group recalls seeing a recent City Council agenda item authorizing the City to hire Archipelago. Was this a public process?

Many months ago our coalition, via an acquaintance of one of our members, asked about hiring Archipelago to represent Biddeford citizens as UNE's application headed toward Planning Board review. Archipelago was compelled to decline the invitation due to a conflict of interest. Our logical conclusion was that one or more of the firm's attorneys had previously had UNE as a client. Please consider the following:

- A member of our coalition met one of Archipelago's new employees a few months ago, Sophia King. She is a Permitting Associate at the firm, having recently graduated from UNE with a B.A. in Marine Affairs.
- Elias Young is a Research Analyst and Paralegal at the firm. He is a recent graduate of the Marine Affairs program at UNE.

- Grayson Szczepaniak is an Attorney at the firm. She was copied to the email that Attorney Richard sent me and thus is involved somehow in the appeal. She is a graduate of the Marine Science program at UNE.
- A co-founder of the firm, Attorney Sandra Guay, was a law partner of the City Solicitor at Woodman Edmands for many years, before she founded Archipelago. The City Solicitor's ardent contention that a Harbormaster approved UNE's application is *the central issue* in the appeal. The question of cronyism will inevitably surface.

The Planning Board has a Code of Ethics which states, "The Planning Board has the responsibility to ensure that the decision-making process it applies to any issue...is not only rational, but is also perceived as rational." I would assume that the ZBA has a similar Code designed to prevent any appearance of a conflict.

I know for certain, Manager Dever, that you just moved to Maine. Not having had even the slightest chance to get to know the state or the professional players in the business world, there is no conceivable way that you are the person who made the decision to hire Archipelago to represent the ZBA.

Nevertheless, somebody *did* make that decision, and it's almost inconceivable that somebody working for the people of Biddeford thought this would be a wise choice. Given the extremely controversial nature of UNE's application and the lack of transparency that has plagued the Mayor's review process for more than a year and a half, the utmost care was required at this point in time to select an attorney to advise the ZBA during the appeal.

I happen to know that Archipelago is a fine and honorable firm. I'm casting no aspersions upon them whatsoever. However, the distinct flow of new employees to Archipelago from UNE's marine sciences programs makes Archipelago exactly the wrong choice to advise on an appeal involving UNE's marine sciences program. Surely the city's primary objective in the appeal is to restore trust and faith in Biddeford's city government, and confirm that its regulatory processes are fair and impartial.

I noticed in particular that even though you are the new city manager, you were omitted from the distribution list informing us of Attorney Richard's assignment. I thought I should bring this matter to your attention, given the recent media stories profiling you and your priorities. I know for sure that this community is relying upon you to help restore trust and faith in Biddeford's city government, after two years in which our faith and trust have been sorely tested.

Thank you very much for allowing me to pass along my thoughts about this matter.

John Schafer
Hills Beach, Biddeford

Whitten, Nan

From: Keith Richard <krichard@archipelagona.com>
Sent: Monday, September 15, 2025 12:26 PM
To: Dever, Truc
Cc: Center, Harry; Fecteau, Roby; Whitten, Nan; Sandra Guay; Grayson Szczepaniak
Subject: Re: Accusations by John Schafer

Caution: This is an external email. Please take care when clicking links or opening attachments. When in doubt, contact the IT Department

City Manager Dever,

I received a copy of Mr. Schafer's email of yesterday alleging a conflict. While we do not think there is a disqualifying conflict, whether the City wants to proceed with the representation is for the City to decide. We want to make sure that whatever you choose to do, that it is an informed decision.

Archipelago does not and has never represented UNE. I have asked around and we have no written record of speaking with Mr. Schafer or anyone affiliated with him (I am not aware of any named coalition) about the UNE pier. Sandy Guay does recall that a phone call inquiry came in through the firm's receptionist about opposing the UNE pier but we declined the matter before our receptionist or anyone else had a substantive conversation with that person because we were in conversations at that time with an individual about joining the firm (that ultimately did not transpire) and while not a direct conflict, we were concerned that it could become an issue. We never represented the opposition group nor did we learn any confidential information from the interaction that would disqualify our firm from this current representation. We routinely screen and decline matters at an early stage to avoid conflicts problems like this.

Our permitting associate Sophia King did speak with Mr. Schafer in a Zoom call through her professor when she was still a student in the spring. The call was about sedimentation and soils in the Hills Beach area and Sophia was invited to participate in the call because she had researched and written about the subject. The UNE pier was not part of that research or discussion. Based on my conversation with Sophia this morning, that interaction in another unrelated context does not create a conflict.

The appeal and pier issue fall squarely within our focus and expertise in municipal law and conflicts over coastal and marine resources. We founded this firm with the goal to position ourselves to help resolve those conflicts. Some of our staff (Sophia et al.) have degrees that are specific to our area of focus and expertise. It just so happens that UNE is the only university in Maine that offers a marine affairs degree. Our firm has not donated to UNE and I'm not aware we received any direct referrals from the university. We hire their graduates, but that does not mean that we can't be neutral and impartial in advising the Board of Appeals. Maine is a small state and even smaller legal community. These types of prior interactions and relationships arise fairly often and rarely require recusal or disqualification.

My goal in advising the Board of Appeals is to provide procedural guidance to the board to enable them to make their own independent conclusions and decision, so long as they remain within the bounds of the

law. Whether they ultimately agree or disagree with the Planning Board's decision—and the UNE pier—is not my concern. I'm focused on ensuring that the hearing is conducted fairly and lawfully.

A few other disclosures about our connections with UNE: Attorney Ben Ford has guest lectured a marine affairs class there each year and previously served on an advisory board for the Artic program. He represented the former provost but after that person had left UNE. Our summer intern last summer from Maine Law, Bella Dube, was a UNE grad as well.

Lastly, the fact that Sandy Guay worked at Woodman Edmands approximately half a decade ago, and even then never worked on any issues concerning UNE, does not create a conflict. In addition, there appears to be no requirement in the City Charter that would require Council action to appoint what is commonly referred to as a conflict counsel, as opposed to the hiring of the City Solicitor. This firm has by agreement acted as conflict counsel in many municipalities, and retaining conflict counsel has consistently been the role of the City Manager or Administrator.

I would be happy to answer any questions you have.

Best,

Keith

Keith P. Richard, Esq., Principal
Archipelago
1 Dana Street
Portland, ME 04101
(207) 558-0102



From: Harry Center <hcenter@woodedlaw.com>
Sent: Monday, September 15, 2025 9:48 AM
To: Keith Richard <krichard@archipelagona.com>
Subject: Accusations by John Schafer

Keith

I'm cutting and pasting below, an email that John Schafer sent to the City Manager, with "cc" to the media and a bunch of Harbor Master people.

As we both know, only the Client can raise an issue with an attorney's employment and any potential conflicts. As a adverse party, Schafer cannot raise this issue to disqualify you pursuant to our Rules of Professional Responsibility. However at the end of the day, this is between you and the City. My only concern is whether some pier opponents meeting with your firm causes a problem.

Dear Manager Dever,

I am one of many Biddeford residents who has objected to a distinct lack of transparency and apparent conflicts of interest in Biddeford's regulatory review of UNE's proposed marine research pier on the Saco River. On behalf of those residents, I recently filed an appeal of the Planning Board decision to approve UNE's application.

I have been informed that Attorney Keith Richard of Archipelago will be representing the City of Biddeford Zoning Board of Appeals, as the ZBA takes up the appeal. Roby Fecteau, the ZBA's staff liaison, was copied to the email that informed me of this news.

Nobody in our group recalls seeing a recent City Council agenda item authorizing the City to hire Archipelago. Was this a public process?

Many months ago our coalition, via an acquaintance of one of our members, asked about hiring Archipelago to represent Biddeford citizens as UNE's application headed toward Planning Board review. Archipelago was compelled to decline the invitation due to a conflict of interest. Our logical conclusion was that one or more of the firm's attorneys had previously had UNE as a client. Please consider the following:

- *A member of our coalition met one of Archipelago's new employees a few months ago, Sophia King. She is a Permitting Associate at the firm, having recently graduated from UNE with a B.A. in Marine Affairs.*
- *Elias Young is a Research Analyst and Paralegal at the firm. He is a recent graduate of the Marine Affairs program at UNE.*
- *Grayson Szczepaniak is an Attorney at the firm. She was copied to the email that Attorney Richard sent me and thus is involved somehow in the appeal. She is a graduate of the Marine Science program at UNE.*
- *A co-founder of the firm, Attorney Sandra Guay, was a law partner of the City Solicitor at Woodman Edmands for many years, before she founded Archipelago. The City Solicitor's ardent contention that a Harbormaster approved UNE's application is <u>the central issue</u> in the appeal. The question of cronyism will inevitably surface.*

The Planning Board has a Code of Ethics which states, "The Planning Board has the responsibility to ensure that the decision-making process it applies to any issue...is not only rational, but is also perceived as rational." I would assume that the ZBA has a similar Code designed to prevent any appearance of a conflict.

I know for certain, Manager Dever, that you just moved to Maine. Not having had even the slightest chance to get to know the state or the professional players in the business world, there is no conceivable way that you are the person who made the decision to hire Archipelago to represent the ZBA.

Nevertheless, somebody <u>did</u> make that decision, and it's almost inconceivable that somebody working for the people of Biddeford thought this would be a wise choice. Given the extremely controversial nature of UNE's application and the lack of transparency that has plagued the Mayor's review process for more than a year and a half, the utmost care was required at this point in time to select an attorney to advise the ZBA during the appeal.

I happen to know that Archipelago is a fine and honorable firm. I'm casting no aspersions upon them whatsoever. However, the distinct flow of new employees to Archipelago from UNE's marine sciences programs makes Archipelago exactly the wrong choice to advise on an appeal involving UNE's marine

sciences program. Surely the city's primary objective in the appeal is to restore trust and faith in Biddeford's city government, and confirm that its regulatory processes are fair and impartial.

I noticed in particular that even though you are the new city manager, you were omitted from the distribution list informing us of Attorney Richard's assignment. I thought I should bring this matter to your attention, given the recent media stories profiling you and your priorities. I know for sure that this community is relying upon you to help restore trust and faith in Biddeford's city government, after two years in which our faith and trust have been sorely tested.

Thank you very much for allowing me to pass along my thoughts about this matter.

John Schafer
Hills Beach, Biddeford

Harry B. Center, II, Esq.
Woodman Edmands
234 Main Street
P.O. Box 468
Biddeford, Maine 04005
(207) 284-4581

CONFIDENTIALITY NOTICE: The contents in this message and any attachments are legally privileged and confidential and are intended only for the use of the designated recipient(s) stated above. If you are not the intended recipient, you may not review, copy or distribute either this message or any attachments. If you have received this message in error, please notify the sender immediately by telephone or reply e-mail and delete the entire message and any attachments. Thank you for your cooperation.

THE BIDDEFORD GAZETTE

News | Opinion | Resources for Biddeford Maine

UNE pier opponents ramp up their efforts

SEPTEMBER 16, 2025SEPTEMBER 16, 2025 ~ RANDY SEAVER

Even as the University of New England begins construction of its controversial research pier, opponents of the project are ramping up their own efforts and raising new concerns about how the City of Biddeford handled its review of the project.

A group of Biddeford residents are now circulating a petition to require the mayor and city council members to host a citizens' grievance meeting.



This aerial photo from UNE shows where the university is planning to construct its new research pier

According to the city's charter, any Biddeford resident can force the council to publicly hear their concerns during a meeting in which only the citizens are allowed to speak if they can collect at least 100 signatures from registered voters.

Carole Alexander is one of the key organizers of the proposed Citizen Grievance meeting.

Alexander is the wife of the late Marshall Alexander who served as the city's harbor master for 37 years. She says her husband proposed an alternate location for UNE's pier more than 10 years ago.

"I'm angry," Alexander said. "The city has bungled the entire process and the truth has been distorted. First, they removed our harbormaster, and now they are going after a planning board member who raised concerns. It's time for citizens to stand up."

RELATED: Planning Board member: 'Something Smells Fishy" (https://biddeford-gazette.com/2025/08/06/planning-board-member-blasts-mayor-city-council-over-une-proposal-something-feels-fishy/)

Alexander says she is more than confident that her group can collect more than 100 signatures in order to force the meeting.

Meanwhile, questions are now being raised about the law firm that the city hired to represent the Zoning Board of Appeals and some potential conflict of interest issues.

Following the Planning Board's approval of the university's pier project, John Schafer – one of the project's most vocal opponents — filed an appeal of that decision with the city's Zoning Board of Appeals.

Schafer said that he and several other residents are appealing the planning board's decision because it hinges largely on one central point: whether the university's plan required the expressed approval of a harbor master.

"All I can hope for is that the zoning board will send this item back to the planning board," Schafer said. "The planning board got bad information about whether a harbormaster approved the project."

During the planning board's review of the proposed pier, City Attorney Harry Center repeatedly told the board that the project had been approved by a harbormaster.

This audio clip of a discussion between Planning Board Chair Alexa Plotkin and Center during one of the Planning Board's meetings shows that the role and definition of the harbormaster was a central issue of the board's review.

0:00 / 1:35

RELATED: Planning Board approves UNE pier proposal (https://biddeford-gazette.com/2025/08/06/city-gives-final-approval-for-unes-pier-proposal/)

But Schafer and others point to the city's own ordinances and say the private engineer who was hired to replace the city's harbormaster does not meet the definition of a harbormaster from both city and state regulations.

According to city ordinances, a harbormaster must meet specific requirements to hold that title, including being a "city resident for no less than five years; must have five years of marine experience and must attend annual Maine Harbormasters Association training."

Center, however, argues that the engineer hired by the city only needs to "facilitate" the review process and ensure that other local, state and federal agencies have approved the project.

But opponents say the city's ordinances are crystal clear in what defines a 'harbormaster' and what his or her responsibilities are.

Section 74-35 of Biddeford's ordinances reads: "Permission for the construction of any new wharf or pier within the jurisdictional limits of the city shall not be granted without approval of the Harbormaster, along with federal, state and local governing authorities."

"The planning board never heard from an actual harbormaster," Schafer said. "That's a big oversight that needs to be addressed."

More conflicts of interest?

Earlier this month, the city hired Archipelago Law, (https://archipelagona.com/) a small Portland-based law firm to represent the Zoning Board of Appeals.

Former city councilor Kyle Noble says that particular firm has several conflicts of interest issues because four of the firm's 12 employees graduated from the University of New England's Marine Sciences program.

Keith Richard, the attorney who will be representing the Zoning Board, refused to comment for this story.

Mayor Marty Grohman declined to comment on the matter because it is a pending legal issue for the city.

Council President Liam LaFountain also said he could not comment directly on the story, but did indicate that he is hoping to learn more about the firm and why they were chosen.

In an email response to Schafer, City Manager Truc Dever wrote: "While I cannot speak to your assertions regarding potential conflicts of interest, I will be looking into this in advance of the appeals hearing to ensure there is, in fact, no conflict."

Next steps?

A UNE spokesperson said the university is currently searching for a contractor and has initiated a bid process for the project.

Sarah Delage, Associate Vice President of Communications, said an actual construction schedule has not yet been established and that the university will need a building permit from the city's code enforcement officer.

"The total work can be done in six to eight months," Delage said, pointing out that both the land portion of the project and the water portion can be done in phases, as opposed to concurrently.

Delage said the university has not reached out to mooring owners who may be impacted by the project, saying that responsibility rests with city officials.

Delage also said the university will periodically update construction information on the school's website.

The Zoning Board of Appeals hearing has been set for October 9 and residents who are now gathering signatures for a Grievance meeting with the council say they expect to have more than the required number of signatures they need within a few days.

Editor's Note: A copy of the citizens petition may be viewed or downloaded using the link below:

Request for General Meeting of Citizens
Delivered to the Biddeford City Council in September 2025
via the Biddeford City Clerk, Robin Patterson

We the undersigned officially request that the Biddeford City Council schedule a General Meeting of the Citizens, as outlined by Article XII, Section 4 of the City Charter, on or before October 23, 2025. The purpose of the meeting is to redress grievances related to the city's regulatory review of a pier proposed to be built on the Saco River by the University of New England. The purpose is also to consult upon the public good, as allowed by the City Charter. The following signatories are registered voters and residents of Biddeford.

Request & Petition Drive organized by Carole Alexander, 31 Bridge Road, 207-282-3479

Printed Name	Street Address	Signature	Date

General Meeting (https://biddeford-gazette.com/wp-content/uploads/2025/09/general-meeting.pdf) Download (https://biddeford-gazette.com/wp-content/uploads/2025/09/general-meeting.pdf)

---

*Randy Seaver is the editor and founder of the Biddeford Gazette. He may be reached by email at r (mailto:randy@randyseaver.com)*andy@randyseaver.com (mailto:randy@randyseaver.com)

Never miss another update! Subscribe for free today!
POSTED IN ARCHIVES, BIDDEFORD NEWS

ARCHIPELAGO LAW BIDDEFORD NEWS KEITH RICHARD KYLE NOBLE. JOHN SCHAFER LIAM LAFOUNTAIN MARTY GROHMAN SARAH DELAGE TRUC DEVER UNIVERSITY OF NEW ENGLAND

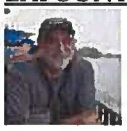

Published by Randy Seaver

Randy Seaver is a cranky, nearly insufferable malcontent living in Biddeford. He is a retired newspaper editor and the principal of a small strategic communications consulting firm. He may be contacted at randy@randyseaver.com *View all posts by Randy Seaver*

3 thoughts on "UNE pier opponents ramp up their efforts"

1. **butterynacho30c64cd31b**
   SAYS:
   SEPTEMBER 17, 2025 AT 2:15 PM
   Just tried to deliver some signatures: no one home and telephone is disconnected. Help.

   Reply
2. **Ken Buechs**
   SAYS:
   SEPTEMBER 18, 2025 AT 10:55 AM
   Still don't know how to submit signatures

   Reply
   1. **Randy Seaver**
      SAYS:
      SEPTEMBER 19, 2025 AT 11:22 AM
      I would suggest that John Schafer probably could help you out. Carole Alexander is also circulating petitions.

      Reply

BLOG AT WORDPRESS.COM.

Whitten, Nan

From: Pier Review <unepierreview@yahoo.com>
Sent: Tuesday, October 14, 2025 9:27 AM
To: Randy Seaver; srichelieu@metln.org; newsdesk@sacobaynews.com; dinamendros@gmail.com; wmtw@wmtw.com; sean.a.murphy@charter.com; desk@newscentermaine.com; tvmail@wgme.com
Subject: Grohman's defense of UNE pier review crumbles at Biddeford mayoral debate

Caution: This is an external email. Please take care when clicking links or opening attachments. When in doubt, contact the IT Department

Grohman's defense of UNE pier review crumbles at Biddeford mayoral debate

MEDIA CONTACT: unepierreview@yahoo.com

(Biddeford, Maine) During a mayoral debate on Friday night, current Mayor Martin Grohman blamed others for the decision to remove a qualified harbormaster from reviewing an application by the University of New England (UNE) on the Saco River.

Asked about silencing assistant harbormaster Randy Desmaris in 2024, Grohman began his answer by saying, "It wasn't a decision made at my level."

Grohman, city solicitor Harry Center, and former city manager Jim Bennett were strong advocates for preventing both the harbormaster and the assistant harbormaster from looking at UNE's application. In May of 2025, Grohman summoned a citizen critic to Biddeford City Hall for a "terse and heated" meeting about the regulatory process, and was joined by Center to justify Biddeford's regulatory review. According to the Biddeford Gazette, Grohman "defended the way the city has acted during the review of a controversial pier that the University of New England wants to construct on the Saco River."

Now running for re-election, Grohman suddenly changed his tune during the debate Friday night at Biddeford High School.

"This entire process has been really unfortunate," he said, "and some steps were bungled along the way."

Grohman did not take any responsibility for any of the "bungled steps," and the conclusion of his remarks was met with a stony silence from a large audience watching the debate at Biddeford High School. His two mayoral opponents both received warm applause after they indicated that Desmaris should not have been removed as harbormaster. City Councilor Norman Belanger, a candidate for mayor, was blunt.

"The whole process was botched," he said.

---END---

Whitten, Nan

From: Milligan, Tom
Sent: Thursday, October 23, 2025 2:55 PM
To: Whitten, Nan
Subject: FW: MEDIA ALERT: Angry citizens sound off in Biddeford tonight

As requested

Tom Milligan, PE, PLS, SE
City of Biddeford | P.O. Box 586, Biddeford, ME 04005
207-571-0638| tom.milligan@biddefordmaine.org *(Office Hours: Mon-Thu, Closed Fri)*

From: Pier Review <unepierreview@yahoo.com>
Sent: Thursday, October 23, 2025 12:51 PM
To: desk@newscentermaine.com; wmtw@wmtw.com; tvmail@wgme.com; sean.a.murphy@charter.com; Randy Seaver <randyseaver01@gmail.com>; ssharon@mainepublic.org; apmaine@ap.org
Subject: MEDIA ALERT: Angry citizens sound off in Biddeford tonight

Caution: This is an external email. Please take care when clicking links or opening attachments. When in doubt, contact the IT Department

MEDIA ALERT: Angry citizens sound off in Biddeford tonight

MEDIA CONTACT: unePierReview@Yahoo.com

(Biddeford, Maine) Only the third "General Meeting of the Citizens" in this city's history will take place tonight at 6:00 p.m., at Biddeford City Hall.

As allowed by the city charter, the city council and mayor must remain silent as residents air their grievances about how the city has gone about approving a new marine sciences research pier proposed by the University of New England (UNE). In just a few days last month, citizens gathered enough signatures to force the meeting.

Drawing particular attention will be Mayor Martin Grohman, a noted champion of the pier who defends the city's decision to prevent both the harbormaster and the assistant harbormaster from playing any significant role in reviewing UNE's application. Also, after a planning board member warned the city council in early August that the city's regulatory review was flawed, Grohman acted to remove him from his post. The city council refused to follow suit, a major embarrassment for the first-term mayor.

Adding fuel to the fire, last week the Biddeford Gazette reported that the Saco River Corridor Commission (SRCC) created a "no development" buffer in 2001, where the pier's access road will be built. The Commission confirmed the buffer was created in 2001, but then changed its story to describe the buffer as an "optional feature."

It was discovered yesterday that the SRCC changed their story after being pressured last week by UNE.

Tonight's meeting will be moderated by Craig Pendleton, a long-time commercial fisherman and the former executive director of the Biddeford-Saco-Old Orchard Beach Chamber of Commerce.

###

Whitten, Nan

From: Milligan, Tom
Sent: Wednesday, October 22, 2025 5:20 PM
To: Whitten, Nan
Subject: Fw: Biddeford's council president seeks AG help on UNE pier legality

As requested 😎

Get Outlook for iOS

From: Pier Review <unepierreview@yahoo.com>
Sent: Wednesday, October 22, 2025 11:35:53 AM
To: newsdesk@sacobaynews.com <newsdesk@sacobaynews.com>; Randy Seaver <randyseaver01@gmail.com>; dinamendros@gmail.com <dinamendros@gmail.com>; srichelieu@metln.org <srichelieu@metln.org>; desk@newscentermaine.com <desk@newscentermaine.com>; wmtw@wmtw.com <wmtw@wmtw.com>; tvmail@wgme.com <tvmail@wgme.com>; sean.a.murphy@charter.com <sean.a.murphy@charter.com>; ssharon@mainepublic.org <ssharon@mainepublic.org>
Subject: Biddeford's council president seeks AG help on UNE pier legality

Caution: This is an external email. Please take care when clicking links or opening attachments. When in doubt, contact the IT Department

Biddeford's council president seeks AG help on UNE pier legality

MEDIA CONTACT: unePierReview@Yahoo.com

(Biddeford, Maine) In a meeting last night Liam Lafountain, president of the Biddeford City Council, asked his colleagues to consider a "resolve" during their upcoming November 6 meeting, requesting the Maine Attorney General to help straighten out a crucial legal question about a pier proposed by the University of New England (UNE).

At issue is a 250-foot buffer to which the university agreed in 2001 that outlawed all future development along the entire riverfront of the university's Biddeford campus.

The Saco River Corridor Commission (SRCC) verified in an email to a Biddeford resident, and in a recent story reported by the Biddeford Gazette, that the shoreline of the Saco River on UNE's Biddeford campus is protected by the 250-foot "no development" buffer. The Commission's executive director Cheri Dunning confirmed this again just recently, writing that the 2001 order creating the buffer has "the force and effect of law."

The university disagrees, and wrote to elected officials that "the SRCC did not create a 'no development' or 'no build' buffer zone for UNE's property."

After a story about the buffer appeared in the Biddeford Gazette, Dunning beat a hasty retreat, writing to elected officials that the buffer is irrelevant to UNE's pier project. She wrote that previous orders of the Commission are merely an "optional feature" that her staff can consider --- or not --- when preparing Commissioners to review any application.

The SRCC is a quasi-state agency created by the Maine Legislature in the 1970s. It is widely credited with having protected water quality and scenic attributes of the Saco River all the way from Fryeburg to Biddeford Pool. Its Commissioners have a reputation for very stringent protection measures, penetrating questions about any building project adjacent to the river no matter how small, and requiring applicants to attend several meetings to win project approval. UNE's $5 million, 170 foot pier was approved at a single meeting in August of 2024.

According to SRCC minutes in 2001, UNE's then-president strongly supported the creation of the buffer. "Ms. Featherman stated that the University of New England has absolutely no plans to build within 250 feet of the river, and that the city as well as the university believe this buffer to be very sensitive and necessary for the protection of the river."

Given the SRCC's decades-long reputation for stringent adherence to environmental protections, Dunning's assertion that Commission orders can now be easily sidestepped has shocked many longtime observers. Lafountain noted in his remarks that elected officials have heard "two different things" from the SRCC. His request to discuss assistance from the Attorney General was met with immediate agreement from other councilors last night. It appears the council will formulate the resolve during its next meeting on November 6.

"Finally, someone shows true leadership, rather than run away and hide," said John Schafer, the former chair of the Biddeford Harbor Commission. "This buffer question is just the latest regulatory dispute connected to this application. Mr. Lafountain deserves credit for taking charge and getting answers for the people of Biddeford."

(This links to video of the Biddeford City Council meeting, October 21, 2025. At 01:45:00 Lafountain begins his remarks about the legal controversy.)

---30---

Whitten, Nan

From: Emhiser, William
Sent: Monday, March 31, 2025 11:57 AM
To: Hills Beach John; Grohman, Martin; Whitten, Nan
Cc: LaFountain, Liam; Lessard, Marc; Ortiz, Doris; Whiting, Scott; Beaupre, Rogerp; Gross, Neva; Belanger, Norman; Center, Harry; Planning Board; Gervais, George
Subject: Re: Question about process on the UNE pier application

Hi John,

I'm with the Mayor this afternoon, so we'll get the answers to these back to you shortly. Thanks.

- Bill

NOTICE: Under Maine's Freedom of Access (Right to Know) Law, documents, including emails, in the possession of public officials about City business are classified as public records. This means if anyone asks to see them, we are required to provide them. There are very few exceptions. We welcome citizens' comments and want to hear from our constituents, but please keep in mind that what you write in an email is not private and could show up in one of the local media

---

From: Hills Beach John <hillsbeachjohn@yahoo.com>
Sent: Monday, March 31, 2025 10:24:38 AM
To: Grohman, Martin <Martin.Grohman@Biddefordmaine.org>; Whitten, Nan <Nan.Whitten@Biddefordmaine.org>
Cc: LaFountain, Liam <Liam.LaFountain@Biddefordmaine.org>; Lessard, Marc <Marc.Lessard@Biddefordmaine.org>; Ortiz, Doris <Doris.Ortiz@Biddefordmaine.org>; Emhiser, William <William.Emhiser@Biddefordmaine.org>; Whiting, Scott <Scott.Whiting@Biddefordmaine.org>; Beaupre, Rogerp <Rogerp.Beaupre@biddefordmaine.org>; Gross, Neva <Neva.Gross@biddefordmaine.org>; Belanger, Norman <Norman.Belanger@Biddefordmaine.org>; Center, Harry <hcenter@woodedlaw.com>; Planning Board <planningboard@biddefordmaine.org>; Gervais, George <George.Gervais@biddefordmaine.org>
Subject: Re: Question about process on the UNE pier application

Caution: This is an external email. Please take care when clicking links or opening attachments. When in doubt, contact the IT Department

Hi Nan, thank you. Yes, that answers two of my questions, leaving only three.

1. Why did Biddeford's representative to the Saco River Corridor Commission abstain from voting on the pier proposal, when it was before that regulatory body last August?
2. Did the City Manager know ahead of time that he would abstain?
3. If the manager knew he would abstain, why didn't Biddeford's alternate representative attend the meeting and provide us with appropriate representation?

Thank you very much for getting back to me so quickly.

John

On Monday, March 31, 2025 at 09:47:38 AM EDT, Whitten, Nan <nan.whitten@biddefordmaine.org> wrote:

Good Morning, Mr. Schaffer:

The Planning Office received the attached Army Corp of Engineer approval today. However, the Planning Office has NOT received an official application yet, but this attachment includes proposed plans. Hopefully, this may answer some of your questions.

Respectfully,

Nan Whitten

City of Biddeford

Office Manager

Planning & Development

207-284-9115

From: Hills Beach John <hillsbeachjohn@yahoo.com>
Sent: Sunday, March 30, 2025 7:48 AM
To: Grohman, Martin <Martin.Grohman@Biddefordmaine.org>
Cc: LaFountain, Liam <Liam.LaFountain@Biddefordmaine.org>; Lessard, Marc <Marc.Lessard@Biddefordmaine.org>; Ortiz, Doris <Doris.Ortiz@Biddefordmaine.org>; Emhiser, William <William.Emhiser@Biddefordmaine.org>; Whiting, Scott <Scott.Whiting@Biddefordmaine.org>; Beaupre, Rogerp <Rogerp.Beaupre@biddefordmaine.org>; Gross, Neva <Neva.Gross@biddefordmaine.org>; dylyan.doughty@biddefordmaine.org; Belanger, Norman <Norman.Belanger@Biddefordmaine.org>; Center, Harry <hcenter@woodedlaw.com>; Planning Board <planningboard@biddefordmaine.org>; srichelieu@metln.org; dmendros@metln.org; ggraham@pressherald.com; newsdesk@sacobaynews.com; Randy Seaver <randyseaver01@gmail.com>; cfox@metln.org; erussell@pressherald.com; unepierreview@yahoo.com
Subject: Re: Question about process on the UNE pier application

Caution: This is an external email. Please take care when clicking links or opening attachments. When in doubt, contact the IT Department

Good morning Mayor Grohman, I hope all is well with you.

It would be unfortunate to inadvertently create an impression that the City of Biddeford has joined UNE, the City of Saco, the DEP, and Senator Collins' office in what appears to be an effort to chill public dialogue about UNE's pier location on the Saco River.

As examples, I cite UNE's refusal to release the application it submitted to NIST, the DEP Commissioner refusing a citizens request to hold a public hearing, Saco prohibiting a presentation on pier alternatives to its Coastal Waters Commission, Senator Collins' office refusing to provide contact information at NIST, UNE failing to allow public participation in the site survey it conducted for the Bureau of Submerged Lands, and of course UNE pressuring the editor of the Saco Bay News because the university didn't want them reporting on the controversy. (No story has appeared there since.) These incidents add up to just the opposite of transparency and open government

Ten months have passed since the university submitted its application to the City. Tomorrow marks six weeks since I asked a few questions about process. It has been four weeks since I sent a reminder email, and neither of my emails has resulted in answers to the questions or even acknowledgment of having received the inquiry. These are the questions I asked:

1. Why did Biddeford's representative to the Saco River Corridor Commission abstain from voting on the pier proposal, when it was before that regulatory body last August?
2. Did the City Manager know ahead of time that he would abstain?
3. If the manager knew he would abstain, why didn't Biddeford's alternate representative attend the meeting and provide us with appropriate representation?
4. Do you have any idea how far along the Army Corps is in their review, and when they might reach a determination?
5. If the Army Corps declines to issue a permit, what happens then?

I should mention again that I have received emails from Saco and Biddeford city councilors expressing their strong support for transparency and full disclosure as this pier proposal is reviewed by regulatory authorities. They seem committed to that principle, which is reassuring. With that in mind, I'd like to make a modest suggestion. At some point in Tuesday's 4/1 Council meeting, could either you or Mr. Phinney inform the public that the 5 questions listed above have been received by the City? And, would it not be reasonable to announce that the answers to those questions will be researched in the next two weeks and then provided at the next Council meeting on 4/15?

Thank you for your time, and please know that I plan to share your response with the many Saco and Biddeford residents who are following this issue.

Sincerely,

John Schafer

On Monday, March 3, 2025 at 09:02:27 PM EST, Hills Beach John <hillsbeachjohn@yahoo.com> wrote:

Dear Mayor Grohman,

I know it has been a busy time at Biddeford City Hall recently, so I am writing to let you know I understand that you may need a little more time to answer the 5 questions I posed on February 17. I also repeat my appreciation for the strong statements of support for openness and transparency from you and the Council.

In a related matter, as you know Sen. Collins and/or her staff, over the course of a month, did their best to make sure I didn't get some routine UNE pier information I requested. So I went around that obstacle and found the information myself. My next step was to file a FOIA request with NIST, and that agency promised to get back to me within 20 days. My request was for the application UNE filed with NIST to get $3.5 in taxpayer funding. Specifically, I am interested in learning what representations the university made to federal authorities about the local permitting process. I'd like to know what they said about the Planning Board and any other regulatory hurdles they face. I believe the citizens of Biddeford and Saco deserves to have that information, as does the Planning Board and City Council. I will let you know when NIST replies.

As mentioned, I don't want to be unreasonable in my petition to you. Please take what time you need to help me understand the answers to these questions. My original email is posted below.

Sincerely,

John Schafer

Hills Beach, Biddeford

On Monday, February 17, 2025 at 12:16:28 PM EST, Hills Beach John <hillsbeachjohn@yahoo.com> wrote:

Good afternoon, Mayor Grohman.

I have a few questions about process, in regard to UNE's proposal to build a new pier.

Many applicants have a difficult time proposing a small dock or structure, or some minor alteration on their riverfront property, to the Saco River Corridor Commission. Often the applicant must endure several meetings before a permit is granted. Some would say that the SRCC is notorious for making people really sweat before they are granted a permit.

It was a surprise to many last summer when UNE's proposal for a pier, a major intrusion into the river costing several million dollars, sailed through in one meeting. Also, it was alarming that Biddeford's SRCC representative abstained from the voting, and thus Biddeford citizens were unrepresented in the discussion and in the vote on this major proposal. Some questions:

1. Why did he abstain from voting?
2. Did the City Manager know ahead of time that he would abstain?

3. If the manager knew he would abstain, why didn't Biddeford's alternate representative attend the meeting and provide us with appropriate representation?

As to where UNE's application stands now, on the City website it states that UNE can seek review by all non-City review agencies/authorities. "Upon the completion of those processes, the local review processes will begin."

I can't vouch for the veracity of this information, but I have been told that the U.S. Army Corps of Engineers will not issue a permit if they don't have "sign off" from the harbormaster. Our harbormaster has been ordered not to comment on the application. The City Manager's intent to hire a temporary harbormaster was deemed illegal by the Maine Harbormasters Association, and since then I can't recall seeing information about another solution. As far as I know, the Army Corps is evaluating UNE's application without benefit of the local knowledge that a harbormaster would normally provide.

1. Do you have any idea how far along the Army Corps is in their review, and when they might reach a determination?
2. If the Army Corps declines to issue a permit, what happens then?

It seems to me this application is in some sort of limbo. It was submitted to the City more than eight months ago, but has yet to appear on a Planning Board agenda. Four months before UNE even submitted the application, the university threatened to sue Biddeford if the pier location is not approved exactly as submitted. Existing mooring owners have threatened litigation if their moorings are moved, yet they must be moved for UNE to build the pier as outlined in the current application. The City Manager silenced the harbormasters before securing a back-up plan, but he has since resigned and is leaving in two months, effectively leaving this crucial question for others to solve. Last, I don't see how the Army Corps can issue a permit without having in hand the local knowledge of the river that experts like a harbormaster would normally provide.

The situations seems complex and confusing. I recognize that consultation with the City Attorney and the City Council may be required before you can answer. If you can get back to me at some point with clarification, that would be most appreciated. I suggest also that when you have the answers, the "What happens next?" section of the FAQ page for this project might need to be updated.

Thank you, Mayor Grohman. I conclude by thanking you and the City Council for all previous strong statements of support for openness and transparency in the conduct of City business.

Sincerely

John Scahfer

Whitten, Nan

From: Whitten, Nan
Sent: Monday, March 31, 2025 10:27 AM
To: Hills Beach John; Grohman, Martin
Cc: LaFountain, Liam; Lessard, Marc; Ortiz, Doris; Emhiser, William; Whiting, Scott; Beaupre, Roger; Gross, Neva; Belanger, Norman; Center, Harry; Planning Board; Gervais, George
Subject: RE: Question about process on the UNE pier application

Hi John:

I'm sorry, I do not have the answers to these questions. However, I am happy to help when I can.

Have a good day

Nan.

From: Hills Beach John <hillsbeachjohn@yahoo.com>
Sent: Monday, March 31, 2025 10:25 AM
To: Grohman, Martin <Martin.Grohman@Biddefordmaine.org>; Whitten, Nan <Nan.Whitten@Biddefordmaine.org>
Cc: LaFountain, Liam <Liam.LaFountain@Biddefordmaine.org>; Lessard, Marc <Marc.Lessard@Biddefordmaine.org>; Ortiz, Doris <Doris.Ortiz@Biddefordmaine.org>; Emhiser, William <William.Emhiser@Biddefordmaine.org>; Whiting, Scott <Scott.Whiting@Biddefordmaine.org>; Beaupre, Roger <Roger.Beaupre@biddefordmaine.org>; Gross, Neva <Neva.Gross@biddefordmaine.org>; Belanger, Norman <Norman.Belanger@Biddefordmaine.org>; Center, Harry <hcenter@woodedlaw.com>; Planning Board <planningboard@biddefordmaine.org>; Gervais, George <George.Gervais@biddefordmaine.org>
Subject: Re: Question about process on the UNE pier application

Caution: This is an external email. Please take care when clicking links or opening attachments. When in doubt, contact the IT Department

Hi Nan, thank you. Yes, that answers two of my questions, leaving only three.

1. Why did Biddeford's representative to the Saco River Corridor Commission abstain from voting on the pier proposal, when it was before that regulatory body last August?
2. Did the City Manager know ahead of time that he would abstain?
3. If the manager knew he would abstain, why didn't Biddeford's alternate representative attend the meeting and provide us with appropriate representation?

Thank you very much for getting back to me so quickly.

John

On Monday, March 31, 2025 at 09:47:38 AM EDT, Whitten, Nan <nan.whitten@biddefordmaine.org> wrote:

Good Morning, Mr. Schaffer:

The Planning Office received the attached Army Corp of Engineer approval today. However, the Planning Office has NOT received an official application yet, but this attachment includes proposed plans. Hopefully, this may answer some of your questions.

Respectfully,

Nan Whitten

City of Biddeford

Office Manager

Planning & Development

207-284-9115

From: Hills Beach John <hillsbeachjohn@yahoo.com>
Sent: Sunday, March 30, 2025 7:48 AM
To: Grohman, Martin <Martin.Grohman@Biddefordmaine.org>
Cc: LaFountain, Liam <Liam.LaFountain@Biddefordmaine.org>; Lessard, Marc <Marc.Lessard@Biddefordmaine.org>; Ortiz, Doris <Doris.Ortiz@Biddefordmaine.org>; Emhiser, William <William.Emhiser@Biddefordmaine.org>; Whiting, Scott <Scott.Whiting@Biddefordmaine.org>; Beaupre, Rogerp <Rogerp.Beaupre@biddefordmaine.org>; Gross, Neva <Neva.Gross@biddefordmaine.org>; dylyan.doughty@biddefordmaine.org; Belanger, Norman <Norman.Belanger@Biddefordmaine.org>; Center, Harry <hcenter@woodedlaw.com>; Planning Board <planningboard@biddefordmaine.org>; srichelieu@metln.org; dmendros@metln.org; ggraham@pressherald.com; newsdesk@sacobaynews.com; Randy Seaver <randyseaver01@gmail.com>; cfox@metln.org; erussell@pressherald.com; unepierreview@yahoo.com
Subject: Re: Question about process on the UNE pier application

Caution: This is an external email. Please take care when clicking links or opening attachments. When in doubt, contact the IT Department

Good morning Mayor Grohman, I hope all is well with you.

It would be unfortunate to inadvertently create an impression that the City of Biddeford has joined UNE, the City of Saco, the DEP, and Senator Collins' office in what appears to be an effort to chill public dialogue about UNE's pier location on the Saco River.

As examples, I cite UNE's refusal to release the application it submitted to NIST, the DEP Commissioner refusing a citizens request to hold a public hearing, Saco prohibiting a presentation on pier alternatives to its Coastal Waters Commission, Senator Collins' office refusing to provide contact information at NIST, UNE failing to allow public participation in the site survey it conducted for the Bureau of Submerged Lands, and of course UNE pressuring the editor of the Saco Bay News because the university didn't want them reporting on the controversy. (No story has appeared there since.) These incidents add up to just the opposite of transparency and open government

Ten months have passed since the university submitted its application to the City. Tomorrow marks six weeks since I asked a few questions about process. It has been four weeks since I sent a reminder email, and neither of my emails has resulted in answers to the questions or even acknowledgment of having received the inquiry. These are the questions I asked:

1. Why did Biddeford's representative to the Saco River Corridor Commission abstain from voting on the pier proposal, when it was before that regulatory body last August?
2. Did the City Manager know ahead of time that he would abstain?
3. If the manager knew he would abstain, why didn't Biddeford's alternate representative attend the meeting and provide us with appropriate representation?
4. Do you have any idea how far along the Army Corps is in their review, and when they might reach a determination?
5. If the Army Corps declines to issue a permit, what happens then?

I should mention again that I have received emails from Saco and Biddeford city councilors expressing their strong support for transparency and full disclosure as this pier proposal is reviewed by regulatory authorities. They seem committed to that principle, which is reassuring. With that in mind, I'd like to make a modest suggestion. At some point in Tuesday's 4/1 Council meeting, could either you or Mr. Phinney inform the public that the 5 questions listed above have been received by the City? And, would it not be reasonable to announce that the answers to those questions will be researched in the next two weeks and then provided at the next Council meeting on 4/15?

Thank you for your time, and please know that I plan to share your response with the many Saco and Biddeford residents who are following this issue.

Sincerely,

John Schafer

On Monday, March 3, 2025 at 09:02:27 PM EST, Hills Beach John <hillsbeachjohn@yahoo.com> wrote:

Dear Mayor Grohman,

I know it has been a busy time at Biddeford City Hall recently, so I am writing to let you know I understand that you may need a little more time to answer the 5 questions I posed on February 17. I also repeat my appreciation for the strong statements of support for openness and transparency from you and the Council.

In a related matter, as you know Sen. Collins and/or her staff, over the course of a month, did their best to make sure I didn't get some routine UNE pier information I requested. So I went around that obstacle and found the information myself. My next step was to file a FOIA request with NIST, and that agency promised to get back to me within 20 days. My request was for the application UNE filed with NIST to get $3.5 in taxpayer funding. Specifically, I am interested in learning what representations the university made to federal authorities about the local permitting process. I'd like to know what they said about the Planning Board and any other regulatory hurdles they face. I believe the citizens of Biddeford and Saco deserves to have that information, as does the Planning Board and City Council. I will let you know when NIST replies.

As mentioned, I don't want to be unreasonable in my petition to you. Please take what time you need to help me understand the answers to these questions. My original email is posted below.

Sincerely,

John Schafer

Hills Beach, Biddeford

On Monday, February 17, 2025 at 12:16:28 PM EST, Hills Beach John <hillsbeachjohn@yahoo.com> wrote:

Good afternoon, Mayor Grohman.

I have a few questions about process, in regard to UNE's proposal to build a new pier.

Many applicants have a difficult time proposing a small dock or structure, or some minor alteration on their riverfront property, to the Saco River Corridor Commission. Often the applicant must endure several meetings before a permit is granted. Some would say that the SRCC is notorious for making people really sweat before they are granted a permit.

It was a surprise to many last summer when UNE's proposal for a pier, a major intrusion into the river costing several million dollars, sailed through in one meeting. Also, it was alarming that Biddeford's SRCC representative abstained from the voting, and thus Biddeford citizens were unrepresented in the discussion and in the vote on this major proposal. Some questions:

1. Why did he abstain from voting?
2. Did the City Manager know ahead of time that he would abstain?
3. If the manager knew he would abstain, why didn't Biddeford's alternate representative attend the meeting and provide us with appropriate representation?

As to where UNE's application stands now, on the City website it states that UNE can seek review by all non-City review agencies/authorities. "Upon the completion of those processes, the local review processes will begin."

I can't vouch for the veracity of this information, but I have been told that the U.S. Army Corps of Engineers will not issue a permit if they don't have "sign off" from the harbormaster. Our harbormaster has been ordered not to comment on the application. The City Manager's intent to hire a temporary harbormaster was deemed illegal by the Maine Harbormasters Association, and since then I can't recall seeing information about another solution. As far as I know, the Army Corps is evaluating UNE's application without benefit of the local knowledge that a harbormaster would normally provide.

1. Do you have any idea how far along the Army Corps is in their review, and when they might reach a determination?
2. If the Army Corps declines to issue a permit, what happens then?

It seems to me this application is in some sort of limbo. It was submitted to the City more than eight months ago, but has yet to appear on a Planning Board agenda. Four months before UNE even submitted the application, the university threatened to sue Biddeford if the pier location is not approved exactly as submitted. Existing mooring owners have threatened litigation if their moorings are moved, yet they must be moved for UNE to build the pier as outlined in the current application. The City Manager silenced the harbormasters before securing a back-up plan, but he has since resigned and is leaving in two months, effectively leaving this crucial question for others to solve. Last, I don't see how the Army Corps can issue a permit without having in hand the local knowledge of the river that experts like a harbormaster would normally provide.

The situations seems complex and confusing. I recognize that consultation with the City Attorney and the City Council may be required before you can answer. If you can get back to me at some point with clarification, that would be most appreciated. I suggest also that when you have the answers, the "What happens next?" section of the FAQ page for this project might need to be updated.

Thank you, Mayor Grohman. I conclude by thanking you and the City Council for all previous strong statements of support for openness and transparency in the conduct of City business.

Sincerely

John Scahfer

Whitten, Nan

From: Grohman, Martin
Sent: Wednesday, April 2, 2025 3:10 PM
To: Hills Beach John; Whitten, Nan
Cc: LaFountain, Liam; Lessard, Marc; Ortiz, Doris; Emhiser, William; Whiting, Scott; Beaupre, Rogerp; Gross, Neva; Belanger, Norman; Center, Harry; Planning Board; Gervais, George
Subject: Re: Question about process on the UNE pier application

Hi John,

Thank you for reaching out with your questions regarding the proposed pier at the University of New England's Marine Science Center. Councilor Emhiser asked me to jump in with responses. I appreciate your engagement on this topic.

1. Why did Biddeford's representative to the Saco River Corridor Commission abstain from voting on the pier proposal last August?
It's my understanding that this was a personal decision made just to be certain nobody would interpret any bias one way or the other, as Don's wife is a former UNE Trustee and currently serves as Trustee Emerita. Additionally, the proposal passed with a 6–3 vote, so his abstention did not affect the final outcome either way.

2. Did the City Manager know ahead of time that he would abstain?
Not likely. The Saco River Corridor Commission has 20 member communities and is an agency separate from the City of Biddeford that operates independently under state law. While members are appointed by the member communities' Mayor and confirmed by the City Council or Select Board, they are expected to serve on the Commission as independent voices. There is no indication that the Biddeford City Manager—or any municipal manager, for that matter—would be informed in advance of how an individual SRCC member intends to vote or recuse him or herself.

3. If the City Manager knew he would abstain, why didn't Biddeford's alternate representative attend the meeting?
At the time of the vote, Biddeford did not have an alternate member appointed to the SRCC. That position was and is vacant. These volunteer roles are a big time commitment, and as is the case for many City committees and appointments, I am currently looking for a volunteer to serve. Please send anyone you think would be good (for any committee) my way.

Thank you,
Marty

From: Hills Beach John <hillsbeachjohn@yahoo.com>
Sent: Monday, March 31, 2025 10:24 AM
To: Grohman, Martin <Martin.Grohman@Biddefordmaine.org>; Whitten, Nan <Nan.Whitten@Biddefordmaine.org>
Cc: LaFountain, Liam <Liam.LaFountain@Biddefordmaine.org>; Lessard, Marc <Marc.Lessard@Biddefordmaine.org>;

Ortiz, Doris <Doris.Ortiz@Biddefordmaine.org>; Emhiser, William <William.Emhiser@Biddefordmaine.org>; Whiting, Scott <Scott.Whiting@Biddefordmaine.org>; Beaupre, Rogerp <Rogerp.Beaupre@biddefordmaine.org>; Gross, Neva <Neva.Gross@biddefordmaine.org>; Belanger, Norman <Norman.Belanger@Biddefordmaine.org>; Center, Harry <hcenter@woodedlaw.com>; Planning Board <planningboard@biddefordmaine.org>; Gervais, George <George.Gervais@biddefordmaine.org>
Subject: Re: Question about process on the UNE pier application

Caution: This is an external email. Please take care when clicking links or opening attachments. When in doubt, contact the IT Department

Hi Nan, thank you. Yes, that answers two of my questions, leaving only three.

1. Why did Biddeford's representative to the Saco River Corridor Commission abstain from voting on the pier proposal, when it was before that regulatory body last August?
2. Did the City Manager know ahead of time that he would abstain?
3. If the manager knew he would abstain, why didn't Biddeford's alternate representative attend the meeting and provide us with appropriate representation?

Thank you very much for getting back to me so quickly.

John

On Monday, March 31, 2025 at 09:47:38 AM EDT, Whitten, Nan <nan.whitten@biddefordmaine.org> wrote:

Good Morning, Mr. Schaffer:

The Planning Office received the attached Army Corp of Engineer approval today. However, the Planning Office has NOT received an official application yet, but this attachment includes proposed plans. Hopefully, this may answer some of your questions.

Respectfully,

Nan Whitten
City of Biddeford
Office Manager
Planning & Development
207-284-9115

From: Hills Beach John <hillsbeachjohn@yahoo.com>
Sent: Sunday, March 30, 2025 7:48 AM
To: Grohman, Martin <Martin.Grohman@Biddefordmaine.org>
Cc: LaFountain, Liam <Liam.LaFountain@Biddefordmaine.org>; Lessard, Marc <Marc.Lessard@Biddefordmaine.org>; Ortiz, Doris <Doris.Ortiz@Biddefordmaine.org>; Emhiser, William

<William.Emhiser@Biddefordmaine.org>; Whiting, Scott <Scott.Whiting@Biddefordmaine.org>; Beaupre, Rogerp <Rogerp.Beaupre@biddefordmaine.org>; Gross, Neva <Neva.Gross@biddefordmaine.org>; dylyan.doughty@biddefordmaine.org; Belanger, Norman <Norman.Belanger@Biddefordmaine.org>; Center, Harry <hcenter@woodedlaw.com>; Planning Board <planningboard@biddefordmaine.org>; srichelieu@metln.org; dmendros@metln.org; ggraham@pressherald.com; newsdesk@sacobaynews.com; Randy Seaver <randyseaver01@gmail.com>; cfox@metln.org; erussell@pressherald.com; unepierreview@yahoo.com

Subject: Re: Question about process on the UNE pier application

Caution: This is an external email. Please take care when clicking links or opening attachments.
When in doubt, contact the IT Department

Good morning Mayor Grohman, I hope all is well with you.

It would be unfortunate to inadvertently create an impression that the City of Biddeford has joined UNE, the City of Saco, the DEP, and Senator Collins' office in what appears to be an effort to chill public dialogue about UNE's pier location on the Saco River.

As examples, I cite UNE's refusal to release the application it submitted to NIST, the DEP Commissioner refusing a citizens request to hold a public hearing, Saco prohibiting a presentation on pier alternatives to its Coastal Waters Commission, Senator Collins' office refusing to provide contact information at NIST, UNE failing to allow public participation in the site survey it conducted for the Bureau of Submerged Lands, and of course UNE pressuring the editor of the Saco Bay News because the university didn't want them reporting on the controversy. (No story has appeared there since.) These incidents add up to just the opposite of transparency and open government

Ten months have passed since the university submitted its application to the City. Tomorrow marks six weeks since I asked a few questions about process. It has been four weeks since I sent a reminder email, and neither of my emails has resulted in answers to the questions or even acknowledgment of having received the inquiry. These are the questions I asked:

1. Why did Biddeford's representative to the Saco River Corridor Commission abstain from voting on the pier proposal, when it was before that regulatory body last August?
2. Did the City Manager know ahead of time that he would abstain?
3. If the manager knew he would abstain, why didn't Biddeford's alternate representative attend the meeting and provide us with appropriate representation?
4. Do you have any idea how far along the Army Corps is in their review, and when they might reach a determination?
5. If the Army Corps declines to issue a permit, what happens then?

I should mention again that I have received emails from Saco and Biddeford city councilors expressing their strong support for transparency and full disclosure as this pier proposal is reviewed by regulatory authorities. They seem committed to that principle, which is reassuring. With that in mind, I'd like to make a modest suggestion. At some point in Tuesday's 4/1 Council meeting, could either you or Mr. Phinney inform the public that the 5 questions listed above have been received by the City? And, would it not be reasonable to announce that the answers to those questions will be researched in the next two weeks and then provided at the next Council meeting on 4/15?

Thank you for your time, and please know that I plan to share your response with the many Saco and Biddeford residents who are following this issue.

Sincerely,

John Schafer

On Monday, March 3, 2025 at 09:02:27 PM EST, Hills Beach John <hillsbeachjohn@yahoo.com> wrote:

Dear Mayor Grohman,

I know it has been a busy time at Biddeford City Hall recently, so I am writing to let you know I understand that you may need a little more time to answer the 5 questions I posed on February 17. I also repeat my appreciation for the strong statements of support for openness and transparency from you and the Council.

In a related matter, as you know Sen. Collins and/or her staff, over the course of a month, did their best to make sure I didn't get some routine UNE pier information I requested. So I went around that obstacle and found the information myself. My next step was to file a FOIA request with NIST, and that agency promised to get back to me within 20 days. My request was for the application UNE filed with NIST to get $3.5 in taxpayer funding. Specifically, I am interested in learning what representations the university made to federal authorities about the local permitting process. I'd like to know what they said about the Planning Board and any other regulatory hurdles they face. I believe the citizens of Biddeford and Saco deserves to have that information, as does the Planning Board and City Council. I will let you know when NIST replies.

As mentioned, I don't want to be unreasonable in my petition to you. Please take what time you need to help me understand the answers to these questions. My original email is posted below.

Sincerely,

John Schafer
Hills Beach, Biddeford

On Monday, February 17, 2025 at 12:16:28 PM EST, Hills Beach John <hillsbeachjohn@yahoo.com> wrote:

Good afternoon, Mayor Grohman.

I have a few questions about process, in regard to UNE's proposal to build a new pier.

Many applicants have a difficult time proposing a small dock or structure, or some minor alteration on their riverfront property, to the Saco River Corridor Commission. Often the applicant must endure several meetings before a permit is granted. Some would say that the SRCC is notorious for making people really sweat before they are granted a permit.

It was a surprise to many last summer when UNE's proposal for a pier, a major intrusion into the river costing several million dollars, sailed through in one meeting. Also, it was alarming that Biddeford's SRCC representative abstained from the voting, and thus Biddeford citizens were unrepresented in the discussion and in the vote on this major proposal. Some questions:

1. Why did he abstain from voting?
2. Did the City Manager know ahead of time that he would abstain?
3. If the manager knew he would abstain, why didn't Biddeford's alternate representative attend the meeting and provide us with appropriate representation?

As to where UNE's application stands now, on the City website it states that UNE can seek review by all non-City review agencies/authorities. "Upon the completion of those processes, the local review processes will begin."

I can't vouch for the veracity of this information, but I have been told that the U.S. Army Corps of Engineers will not issue a permit if they don't have "sign off" from the harbormaster. Our harbormaster has been ordered not to comment on the application. The City Manager's intent to hire a temporary harbormaster was deemed illegal by the Maine Harbormasters Association, and since then I can't recall seeing information about another solution. As far as I know, the Army Corps is evaluating UNE's application without benefit of the local knowledge that a harbormaster would normally provide.

1. Do you have any idea how far along the Army Corps is in their review, and when they might reach a determination?
2. If the Army Corps declines to issue a permit, what happens then?

It seems to me this application is in some sort of limbo. It was submitted to the City more than eight months ago, but has yet to appear on a Planning Board agenda. Four months before UNE even submitted the application, the university threatened to sue Biddeford if the pier location is not approved exactly as submitted. Existing mooring owners have threatened litigation if their moorings are moved, yet they must be moved for UNE to build the pier as outlined in the current application. The City Manager silenced the harbormasters before securing a back-up plan, but he has since resigned and is leaving in two months, effectively leaving this crucial question for others to solve. Last, I don't see how the Army Corps can issue a permit without having in hand the local knowledge of the river that experts like a harbormaster would normally provide.

The situations seems complex and confusing. I recognize that consultation with the City Attorney and the City Council may be required before you can answer. If you can get back to me at some point with clarification, that would be most appreciated. I suggest also that when you have the answers, the "What happens next?" section of the FAQ page for this project might need to be updated.

Thank you, Mayor Grohman. I conclude by thanking you and the City Council for all previous strong statements of support for openness and transparency in the conduct of City business.

Sincerely
John Scahfer

Whitten, Nan

From: Whitten, Nan
Sent: Tuesday, April 22, 2025 9:44 AM
To: 'Hills Beach John'
Cc: Gervais, George; Galbraith, David
Subject: RE: A request for notification
Attachments: 2025_04_16 UNE Research Pier Plans.pdf; 2025_04_16 UNE Research Pier Site Plan - Shoreland Application.pdf

Good morning, John:

UNE submitted the attached last week. We have not reviewed it yet but are hoping to complete this portion of the process within the next few weeks. David (City Planner) is out this week therefore his portion will not be completed until next week. Our third-party engineers have yet to look at it as well. Please let us know if you have any questions.

Thank you

Nan.

From: Hills Beach John <hillsbeachjohn@yahoo.com>
Sent: Monday, April 21, 2025 1:06 PM
To: Whitten, Nan <Nan.Whitten@Biddefordmaine.org>
Subject: Re: A request for notification

Caution: This is an external email. Please take care when clicking links or opening attachments. When in doubt, contact the IT Department

Hi Nan, thanks again for your courtesy.

Just checking in, has UNE submitted an application to the Planning Board yet for its new pier? Thanks!

---m.r.

On Wednesday, April 9, 2025 at 12:31:44 PM EDT, Whitten, Nan <nan.whitten@biddefordmaine.org> wrote:

Good afternoon, John:

We have not received a submittal for this project yet but anticipate receiving one soon.

We are happy to add you to the notification list when we notify abutters of meetings.

Would you mind providing me with your mailing address and last name and you will be on the notification list?

Thank you

Nan.

Nan Whitten

City of Biddeford

Office Manager

Planning & Development

207-284-9115

From: Hills Beach John <hillsbeachjohn@yahoo.com>
Sent: Wednesday, April 9, 2025 12:15 PM
To: Phinney, Brian <Brian.Phinney@Biddefordmaine.org>
Cc: Galbraith, David <David.Galbraith@biddefordmaine.org>; Planning Board <planningboard@biddefordmaine.org>; Whitten, Nan <Nan.Whitten@Biddefordmaine.org>; Macneill, Shelly <shelly.macneill@biddefordmaine.org>
Subject: A request for notification

Caution: This is an external email. Please take care when clicking links or opening attachments. When in doubt, contact the IT Department

Good morning, Brian. Love the work you are doing on behalf of the City. I know it's not an easy time, and we are lucky to have had you available and willing to step into the breach.

As far as the UNE pier is concerned, am I correct in assuming that the application has not yet been scheduled for a Planning Board agenda? Also, I won't belabor the point, but due to "unique" circumstances, Planning Board review will be the one and only time during which those with local knowledge of how the river flows will be able to provide their input to a regulatory body. Essentially, Planning Board proceedings will be the only chance for Biddeford citizens to actually be represented.

For that reason, may I ask that you ensure that I be copied from this point on to all future communications between the Planning Department and UNE, and vice versa, in regard to the application for a new marine sciences research pier? If I could also be notified as to when this application is first scheduled onto a Planning Board agenda, that would be great. I look forward to your reply, and thank you very much.

Sincerely,

John

Whitten, Nan

From: Galbraith, David
Sent: Wednesday, May 28, 2025 11:51 AM
To: Alan Thibeault; Plotkin, Alexa; Patoine, Larry; Dubois, Matthew; Angers, Roch; Susan Deschambault; Deschambault, Susan; Lewis, Kayla; Beaudette, Stephen
Cc: Center, Harry; Whitten, Nan
Subject: UNE Research Pier
Attachments: Shoreland Zone Ordinance Relating to Piers Docks Wharfs.pdf

All, this email was sent to me by the City Solicitor (Harry Center) late last night. In his email Harry states *"I will provide this advice/opinion to the Planning Board before the June 18, 2925 meeting and I would ask the Planning Department to please forward this email to all members of the planning board and the designated official from UNE"*. As such, I am forwarding the entire email string and Harry's response.

As always, please do not respond to this email or discuss this matter with other Board members. I have also copied Alan Thibeault of UNE.

Thanks all & looking forward to seeing you all at the site walk on June 9th.
David

From: Harry Center <hcenter@woodedlaw.com>
Sent: Tuesday, May 27, 2025 8:31 PM
To: Matthew Haas <matthew1@maine.rr.com>; Whitten, Nan <Nan.Whitten@Biddefordmaine.org>
Cc: Galbraith, David <David.Galbraith@biddefordmaine.org>
Subject: RE: Public notice

Caution: This is an external email. Please take care when clicking links or opening attachments. When in doubt, contact the IT Department

Mr. Hass:
Attached is the provision of the City's Shoreland Zoning Ordinance relating to "approval" of piers. There are no standards for "local knowledge"; depth, current, moorings or any other complaints by the opponents of the UNE project.
These are the standards and provisions that the City Planning Board must apply to the application. Additionally, because this is a non-residential development, site review is also required-- however, none of the standards in that provision of the City Code of Ordinances relate to telling an applicant where the location of a pier should be located.
I will provide this advice/opinion to the Planning Board before the June 18, 2925 meeting and I would ask the Planning Department to please forward this email to all members of the planning board and the designated official from UNE. I will continue to follow the law and due process requirements to all parties.
At this time, I see no basis for the City's Planning Board to deny this permit based upon the water depth at the location, the current, or any of the accusations made at the last meeting- as there are no standards within the City's Code of Ordinances/Shoreland Zoning Ordinance that would justify or support the denial of a pier based on such claims by the opponents. If someone can point to a Shoreland Zoning Ordinance provision, City land use standard or other ordinance within the City's jurisdiction to deny this request for approval, then the Planning Board should consider any such provision and decide. Further if an opponent can point to a City Ordinance provision that allows the City to dictate the location of the pier, I will be happy to review it.

I made that statement at the meeting, in good faith, that after the Planning Board heard from the public, I would give them legal advice regarding my opinion as to the legal standards the Planning Board must apply, as many of the public comments related to issues that are not within the Planning Board's jurisdiction. However I will respond to your email now.
The Planning Board will make its decision based on the standards set forth in the attached Ordinance. I have not located any other City of Biddeford Land Use Ordinance provision related to docks, piers, wharfs and City staff has not alerted me to any others. If you or anyone else are aware of anything within the City's Code (available online at the City's website) please feel free to raise such provisions and staff and I will review them.
Thank you,
Harry B. Center, II Esq.
City Attorney

From: Matthew Haas <matthew1@maine.rr.com>
Sent: Tuesday, May 27, 2025 4:52 PM
To: Nan Whitten <Nan.Whitten@biddefordmaine.org>
Cc: David Galbraith <David.Galbraith@biddefordmaine.org>; Harry Center <hcenter@woodedlaw.com>
Subject: Re: Public notice

During the meeting near the end there was a discussion on the limits of the boards review . harry center stated he has and will issue them some guidance on the extent and limits of their review. and he said it was available to the public.

Matthew Haas
Sent from my iPhone

On May 27, 2025, at 1:57 PM, Whitten, Nan <Nan.Whitten@biddefordmaine.org> wrote:

Guidance, do you mean the ordinance or do you have something specific in mind?

From: matthew1@maine.rr.com <matthew1@maine.rr.com>
Sent: Tuesday, May 27, 2025 1:51 PM
To: Whitten, Nan <Nan.Whitten@Biddefordmaine.org>
Subject: RE: Public notice

Caution: This is an external email. Please take care when clicking links or opening attachments. When in doubt, contact the IT Department

Good afternoon, Can I get copies of the guidance the planning board was issued by city legal council?

From: "Whitten, Nan"
To: "Matthew Haas"
Cc:

Sent: Tuesday May 27 2025 7:46:38AM
Subject: RE: Public notice

Thank you Matthew, you are on the list

From: Matthew Haas <matthew1@maine.rr.com>
Sent: Thursday, May 22, 2025 6:33 PM
To: Whitten, Nan <Nan.Whitten@Biddefordmaine.org>
Subject: Re: Public notice

Caution: This is an external email. Please take care when clicking links or opening attachments. When in doubt, contact the IT Department

Matthew haas

36 meeting house road

Biddeford maine

297-590-3889

Matthew Haas

Sent from my iPhone

On May 22, 2025, at 2:34 PM, Whitten, Nan <Nan.Whitten@biddefordmaine.org> wrote:

Happy to do so. May I please have your full name and mailing address?

Thank you for reaching out

Nan Whitten

City of Biddeford

Office Manager

Planning & Development

207-284-9115

From: matthew1@maine.rr.com <matthew1@maine.rr.com>
Sent: Thursday, May 22, 2025 2:32 PM
To: Whitten, Nan <Nan.Whitten@Biddefordmaine.org>
Subject: Public notice

Caution: This is an external email. Please take care when clicking links or opening attachments. When in doubt, contact the IT Department

Please add me to the public notice roster for the UNE pier project. Thank you

Whitten, Nan

From: Whitten, Nan
Sent: Thursday, May 29, 2025 11:05 AM
To: Thomas Hatch; Planning Board
Subject: RE: Planning Board Meetings
Attachments: Abutter Packet.pdf

Hi Mr. Hatch,

Thank you for reaching out.

Other than executive sessions, all Planning Board meetings are open to the public and that includes the Site Walk on the 9th. I have attached an abutter packet for you for the Site Walk for your information.

Thank you again, please let us know if you have any other questions or concerns.

Respectfully,

Nan Whitten
City of Biddeford
Office Manager
Planning & Development
207-284-9115

From: Thomas Hatch <thomas.hatch.trh@gmail.com>
Sent: Thursday, May 29, 2025 11:00 AM
To: Planning Board <planningboard@biddefordmaine.org>
Subject: Planning Board Meetings

Caution: This is an external email. Please take care when clicking links or opening attachments. When in doubt, contact the IT Department

Hello,

I am a resident of Biddeford and am curious if the planning board meetings are open to the general public.

I would also like to attend the UNE Pier Proposal site walk on Monday June 9th, if this is open to concerned or affected citizens of Biddeford.

Regards,

Tom Hatch

Whitten, Nan

From: Whitten, Nan
Sent: Tuesday, June 3, 2025 10:38 AM
To: Hills Beach John; geoffreybove@gmail.com
Subject: FW: EXT: UNE Research Dock - SITE WALK DATE

Importance: High

Good Morning,

Yesterday, I had told you that we were going to reschedule the site walk and that I would keep you updated.

The decision was made this morning to keep the site walk as originally scheduled on June 9th at 5:00.

I have included the email David Galbraith sent out to the Board for your reference.

Please let me know if you have any questions.

Thank you

Nan.

From: Galbraith, David <David.Galbraith@biddefordmaine.org>
Sent: Tuesday, June 3, 2025 10:29 AM
To: Whitten, Nan <Nan.Whitten@Biddefordmaine.org>; Iriqat, Adi <adi.iriqat@biddefordmaine.org>; Gervais, George <George.Gervais@biddefordmaine.org>
Subject: FW: EXT: UNE Research Dock - SITE WALK DATE

FYI

From: Galbraith, David
Sent: Tuesday, June 3, 2025 10:25 AM
To: Plotkin, Alexa <Alexa.Plotkin@biddefordmaine.org>; Patoine, Larry <Larry.Patoine@biddefordmaine.org>; Angers, Roch <Roch.Angers@biddefordmaine.org>; Dubois, Matthew <Matthew.Dubois@biddefordmaine.org>; Lewis, Kayla <kayla.lewis@biddefordmaine.org>; Plotkin, Alexa <Alexa.Plotkin@biddefordmaine.org>; Beaudette, Stephen <Stephen.Beaudette@biddefordmaine.org>; Susan Deschambault <susan.deschambault@gmail.com>; Deschambault, Susan <susan.deschambault@biddefordmaine.org>
Cc: Alan Thibeault <athibeault@une.edu>; Lamontagne, Danica <Danica.Lamontagne@Biddefordmaine.org>; Macneill, Shelly <shelly.macneill@biddefordmaine.org>
Subject: RE: EXT: UNE Research Dock - SITE WALK DATE

As directed, we have been looking for alternate dates to conduct the UNE Site Walk so that all Planning Board members are able to attend. However, it has been challenging, especially as we (prior to being asked about alternate dates) sent written notification to all abutting property owners. We have also been fielding phone calls from the public interested in attending. **This morning Alexa and I talked and after weighing the options, we agree it is best to keep the original Site Walk on Monday, June 9th at 5:00pm**. We based this decision on a number of factors, namely:

1. June 9th has the best tide conditions (low tide 4:52pm) for viewing the proposed dock's location.
2. Staff already sent public notices to abutters for the 9th.
3. Transparency. This project has already generated a huge amount of public comment and "misinformation" is being spread. Ultimately, we agreed that changing the Site Walk date, at this time, would likely be perceived by opponents / general public as "suspicious", "non-transparent" and an attempt to "disrupt or confuse the proceedings"… Due to prior complaints about the "lack of transparency" the Planning Office has gone out of our way to share all citizen comments with the Planning Board and UNE and they, in turn, have tried to answer questions. It should be noted that despite not having an application for this project until this past April, we have been collecting and sharing citizen concerns about the project for about a year prior to submittal of UNE's complete application.

The site walk will be conducted from the shore. For Board members unable to attend, I/we apologize. After weighing the options we thought it best to hold to the original site walk date. I would be happy to visit the site, with Board members who are unable to attend on the 9th at your convenience, prior to the scheduled Preliminary Plan review on 6-18-25. Also, if you have specific questions, you would like us to ask on your behalf please send them to Nan, Alexa and I and we can certainly get answers for you.

I have taken the liberty to copy Alan Thibeault (UNE) on this email, so he and his team are aware that **we be conducting the site walk on June 9th starting at 5:00pm**.

Sorry for all the confusion.
David

From: Galbraith, David
Sent: Monday, June 2, 2025 2:56 PM
To: Plotkin, Alexa <Alexa.Plotkin@biddefordmaine.org>; Patoine, Larry <Larry.Patoine@biddefordmaine.org>; Angers, Roch <Roch.Angers@biddefordmaine.org>; Dubois, Matthew <Matthew.Dubois@biddefordmaine.org>; Lewis, Kayla <kayla.lewis@biddefordmaine.org>; Plotkin, Alexa <Alexa.Plotkin@biddefordmaine.org>; Beaudette, Stephen <Stephen.Beaudette@biddefordmaine.org>; Susan Deschambault <susan.deschambault@gmail.com>; Deschambault, Susan <susan.deschambault@biddefordmaine.org>
Cc: Alan Thibeault <athibeault@une.edu>
Subject: FW: EXT: UNE Research Dock - SITE WALK DATE

Following my email of last Thursday afternoon regarding the possible rescheduling the UNE site walk. Alan Thibeault forwarded me the tide charts for the various suggested site walks and the 16th and 18th low tide times low tides will be at 9:42pm and 11:40pm respectively. The 9th & 11th seem to be the dates we would conduct the site visit closest to low tide conditions. I had hoped that the board would be able to view the proposed dock location during low tide, but it seems increasingly challenging. Due to the challenges of securing boats / captains etc. and the desire for "transparency" I think we will need to do the site walk from the shore. My $0.02. Regardless, we need to make a decision on the time/date today. Please let Nan & I know your thoughts.
David

From: Alan Thibeault <athibeault@une.edu>
Sent: Thursday, May 29, 2025 3:58 PM
To: Galbraith, David <David.Galbraith@biddefordmaine.org>
Cc: Whitten, Nan <Nan.Whitten@Biddefordmaine.org>
Subject: RE: EXT: UNE Research Dock - SITE WALK DATE

Caution: This is an external email. Please take care when clicking links or opening attachments. When in doubt, contact the IT Department

David, in review of the tide charts...
June 9 low tide is at 4:52pm
June 11 low tide is at 6:08pm
June 16 low tide is at 9:42pm
June 18 low tide is at 11:40pm

Thanks
AT

From: Galbraith, David <David.Galbraith@biddefordmaine.org>
Sent: Thursday, May 29, 2025 2:59 PM
To: Plotkin, Alexa <Alexa.Plotkin@biddefordmaine.org>; Whitten, Nan <Nan.Whitten@Biddefordmaine.org>; Alan Thibeault <athibeault@une.edu>
Cc: Angers, Roch <Roch.Angers@biddefordmaine.org>; Patoine, Larry <Larry.Patoine@biddefordmaine.org>; Dubois, Matthew <Matthew.Dubois@biddefordmaine.org>; Susan Deschambault <susan.deschambault@gmail.com>; Deschambault, Susan <Susan.Deschambault@biddefordmaine.org>; Lewis, Kayla <Kayla.Lewis@biddefordmaine.org>; Beaudette, Stephen <Stephen.Beaudette@biddefordmaine.org>; Macneill, Shelly <shelly.macneill@biddefordmaine.org>
Subject: EXT: UNE Research Dock - SITE WALK DATE
Importance: High

This email originated from outside of UNE.

Hi all, as you are aware, we scheduled a site walk at UNE for their research pier project on Monday, June 9th @ 5:00 pm. Nan has sent abutter notification cards of the event. However, Roch is unable to attend this meeting, but would like to attend the site walk. I also received a call from Larry, who thinks it is important that all Planning Board members attend this site walk. As such, we could probably reschedule to the following dates (if the Board wants to reschedule):

1. Wednesday, June 11th @ 5:00pm
2. Monday, June 16th @ 5:00pm
3. Wednesday, June 18th @ 4:00 – 4:30pm until 6:00pm when we would come back to City Hall for our regular scheduled meeting. This seems to be the worst option as we would come straight from UNE's site walk to the hearing, which doesn't give UNE any response time to research / comments and questions posed. Further, we seem to have a fairly full agenda for that evening, so adding a site walk is not advisable.

Therefore, the 2 decent alternative dates are:

1. Wednesday, June 11th @ 5:00pm
2. Monday, June 16th @ 5:00pm

The Planning Office was planning on conducting the site walk from the shoreland. A couple of individuals offer to take Planning Board, Staff and the public into the river in their boats. I am slightly anxious about this as I don't want any perceptions of "favoritism" from either "side".
Can each of you please answer the following questions:

1. Should the Board reschedule the site walk?
2. If rescheduled, can you meet on Wednesday, June 11th @ 5:00pm
3. If rescheduled, can you meet on Monday, June 16th @ 5:00pm
4. Regardless of the site walk date, does the Board wish for us to try to coordinate boat rides with the folks that offered?

If we do decide to reschedule, we will need to make a decision by early next week (Monday) as we need to get the word out and send corrected public notices. I want to make sure we can get new notices out so that they arrive before the 9th. Don't want anyone thinking "we" are not trying to stifle public input. I have copied Alan Thibeault (UNE) on this correspondence, so he is aware of this potential change. **Please respond directly to Nan & me on the 4 questions asked above.**

Thanks, and sorry for the lengthy email.

David C.M. Galbraith
Deputy Director Planning and Development / City Planner
City of Biddeford
205 Main Street
Office Hours:
Monday- Tuesday 7:00 am – 5:00 pm
Wednesday- Thursday 8:00 am- 4:00 pm
Friday- Closed

Whitten, Nan

From: Whitten, Nan
Sent: Monday, June 9, 2025 9:20 AM
To: Geoffrey Bove
Cc: Galbraith, David
Subject: RE: Sorry to ask...
Importance: High

Good Morning Geoff

This evening's site walk is more like a workshop for our Planning Board. The public is welcome to attend but only to listen, in a workshop we cannot take questions or comments from the public.

David Galbraith, the Planner, will go over this code of conduct at the beginning of the meeting and we hope all will respect that.

Thank you for reaching out.

Please let us know if you have any questions.

Nan.

From: Geoffrey Bove <geoffreybove@gmail.com>
Sent: Monday, June 9, 2025 5:54 AM
To: Whitten, Nan <Nan.Whitten@Biddefordmaine.org>
Subject: Sorry to ask...

Caution: This is an external email. Please take care when clicking links or opening attachments.
When in doubt, contact the IT Department

Hi,
I seem to have some moderating influence on issues like the current UNE one by helping people stick to facts. For today's site visit, it seems by some publicity that this will be somewhat of a public forum. My question is- will members of the public be allowed to ask questions to UNE or Planning Board members? If not, I'll respond to the FaceBook posts about this.

Even better, is there a written "code of conduct" for this sort of meeting? I could post that.

I think that it has potential to turn into a circus. I'm very unlikely to attend

Thank you!

Geoff

Geoffrey Bove, DC PhD
dba Bove Consulting
27 Nettie Lane
Kennebunkport ME 04046
207 590 8949

Whitten, Nan

From: Harry Center <hcenter@woodedlaw.com>
Sent: Monday, June 16, 2025 3:47 PM
To: Hills Beach John
Cc: Galbraith, David; Whitten, Nan; Grohman, Martin
Subject: RE: any late additions?

Caution: This is an external email. Please take care when clicking links or opening attachments. When in doubt, contact the IT Department

John-

You're welcome and I appreciate your response.

What I sent to you is in the package provided to the Planning Board and submitted by me to the Planning Board.
You have every right to draft and craft any response you deem appropriate. However, respectfully I would request that you not engage in debate with me but rather address your response or disagreement with my opinions to the Planning Board along the lines of "*…you disagree with the legal advice provided on the issue of the harbormaster's role…*" or something like that. I'm not being disrespectful to you- but my advice was my advice to my client-the City and the City Manager at the time. He chose to follow my advice, and my advice and his decision was not a type of policy decision that can now be debated. Thank you for your understanding.

My only point is that debating or arguing with me gets no one anywhere; the Planning Board has my legal opinion, and as a member of the public, you have every right to address the Board on that.

Thanks and I'm sure I'll see you Wednesday night.

Harry

PS: Someone's already emailed everyone and said that I gave " really bad advice"!

From: Hills Beach John <hillsbeachjohn@yahoo.com>
Sent: Monday, June 16, 2025 3:18 PM
To: Harry Center <hcenter@woodedlaw.com>
Cc: Galbraith, David <david.galbraith@biddefordmaine.org>; Whitten, Nan <nan.whitten@biddefordmaine.org>; Grohman, Martin <martin.grohman@biddefordmaine.org>
Subject: Re: any late additions?

Dear Harry, I also appreciate the civility with which you have treated <u>me</u>. I will continue to do the same with you, City Staff, the Mayor, the Council and the Planning Board.

Thank you for sending me this information. I glanced at it briefly, but will take more time to read it carefully tonight. I anticipate that I will respond, and I will do so by close of business tomorrow, Tuesday. A quick preview: the past is the past, and I'm not interested in re-litigating previous decisions. I am more concerned about the Planning Board process, and that they have full information for the decision they will make in the near future.

Thanks very much for the very quick response to my inquiry, and for your continuing service to the City.

Best,

JS

On Monday, June 16, 2025 at 02:32:45 PM EDT, Harry Center <hcenter@woodedlaw.com> wrote:

Mr. Schafer/John:

Because of my respect for you regarding the civil manner which you have expressed your opposition to the UNE pier, I am responding directly to you questions on this matter. However, please understand that I am not engaging in a debate or further defense of my legal advice to the City of Biddeford, in 2024, relating to the conduct of the current Harbormaster and the Harbor Commission for pre-judging, pre-determination of the potential- at the time- request for permission by UNE to construct a Pier pursuant to the City's code, 74-35.

I'm writing to you out of respect and to easily allow you to find my legal opinion on that issue that was sent to the former city manager, regarding the City's engagement of TEC Associates to be the mere facilitator of the UNE application. That opinion is proceeded by a brief memorandum addressing this issue that I wrote last week.

It is further my opinion that any potential challenge to the City's ability to hire an independent entity to review the UNE application has long passed.

Thank you,

Harry Center

From: Whitten, Nan <Nan.Whitten@Biddefordmaine.org>
Sent: Monday, June 16, 2025 1:49 PM
To: Harry Center <hcenter@woodedlaw.com>
Cc: Galbraith, David <David.Galbraith@biddefordmaine.org>
Subject: FW: any late additions?

Whitten, Nan

From: Whitten, Nan
Sent: Monday, June 16, 2025 1:59 PM
To: Hills Beach John
Subject: RE: any late additions?

Hi John,

Thank you for bringing this to my attention. I am looking into it and have asked Harry Center for an explanation and something tangible that I can use in the packet. I will keep you posted.

Thank you again
Nan.

From: Hills Beach John <hillsbeachjohn@yahoo.com>
Sent: Monday, June 16, 2025 1:33 PM
To: Whitten, Nan <Nan.Whitten@Biddefordmaine.org>
Subject: any late additions?

Caution: This is an external email. Please take care when clicking links or opening attachments. When in doubt, contact the IT Department

Good afternoon, Nan, hope you had a great weekend. I have downloaded the packet for Wednesday night's meeting, and I want to thank you for continuing to do a superb job keeping the public thoroughly informed. That's critical, and appreciated.

In that packet I did not see a submission about whether or not Wayne Duffett, P.E. is a credentialed Harbormaster. Harry Center stated very firmly at the May 21 meeting that UNE's application has been approved by a Harbormaster. I know the packet was published on the city website sometime last week. I was wondering, since then have Harry, UNE, Mr. Duffett, UNE or the Maine Harbor Master Association supplied the Planning Department with Mr. Duffett's Harbormaster certification?

At your convenience of course. Thanks very much.

John

Whitten, Nan

From: Whitten, Nan
Sent: Monday, June 16, 2025 1:56 PM
To: Paul Lariviere
Subject: RE: 74-51

Hi Paul,

I'm sorry I do not know about this but have asked for an explanation for our records. Thank you for bringing this to our attention.

Nan.

From: Paul Lariviere <paul@southernmainemarine.com>
Sent: Monday, June 16, 2025 1:13 PM
To: Whitten, Nan <Nan.Whitten@Biddefordmaine.org>
Subject: 74-51

Caution: This is an external email. Please take care when clicking links or opening attachments. When in doubt, contact the IT Department

Please read 74-51 , there has been a violation of this ordinance during the so call appointment of the hired engineer the city paid $2800.00 to for viewing the process of our ordinances being call the interim Harbor Master ,none of the Criteria was ever met or recognized by the Maine Harbor Masters Association ,just hired to overlook the process. I believed the planning board has been fed miss information of the facts by the Harry Center.

Paul Lariviere
Southern Maine Marine Services Inc.
2461 Portland Rd.
Arundel, ME 04046
(207)283-1099

Whitten, Nan

From: Whitten, Nan
Sent: Tuesday, June 17, 2025 12:40 PM
To: Mark Robinson; Planning Board; Galbraith, David
Subject: RE: letter for Planning Board

Hi Mr. Robinson,

Thank you for reaching out and bringing your letter to our attention.

By copying the Planning Board on this email, you brought your concern to the Planning Board directly.

We have added your letter to the packet. If you check the packet now, I believe you will see your letter.

Thank you again.

Respectfully
Nan Whitten

Nan Whitten
City of Biddeford
Office Manager
Planning & Development
207-284-9115

From: Mark Robinson <markrobinsonpr@gmail.com>
Sent: Tuesday, June 17, 2025 12:21 PM
To: Planning Board <planningboard@biddefordmaine.org>; Whitten, Nan <Nan.Whitten@Biddefordmaine.org>; Galbraith, David <David.Galbraith@biddefordmaine.org>
Subject: Fwd: letter for Planning Board

Caution: This is an external email. Please take care when clicking links or opening attachments. When in doubt, contact the IT Department

Good morning. I have downloaded the packet for Wednesday's planning board meeting and reviewed. I have a headache!

On a serious note, I did not find my May 20 letter to the planning board in the packet. This concerns me. If possible, I respectfully would like its omission brought to the board's attention. It is direct commentary on the the UNE pier proposal. Thank you very much.

---m.r.

Whitten, Nan

From: Galbraith, David
Sent: Thursday, June 26, 2025 1:05 PM
To: dinamendros@icloud.com
Cc: Whitten, Nan
Subject: RE: UNE Pier

Hi Dena, Below is the answers to your questions:

1.) I'm wondering how the university would get the okay to proceed with the pier at their proposed location. I understand they have permission from the Maine DEP, the Army Corps of Engineers and the Maine Historic Commission. Is the Planning Board the last permission than need to get their permit to build? If not, what else would be required?
The Planning Board is the last approval that they need from a public body. If the project, is approved by the Board, UNE would then need to schedule a "pre-construction meeting", establish bonding, and apply for building permits.

2.) What grounds would the Planning Board have to deny the application for the Shoreland and Site Plan Review of the pie? The Planning Board may ONLY deny the application based upon the specific criteria of the City's Site Plan and Shorland standards for a pier or dock. They are not permitted to just deny the application because they don't like it, don't like the location etc. Their decision may only be based upon the criteria.

If this is denied, would the university be unable to build the pier, at least at their proposed site?
No. If the dock is denied by the Board, the denial MUST include specific statements of how the proposed dock does not meet the City's standards. UNE could file an appeal to the decision, arguing that the Planning Board errored in their decision. UNE could also decide to modify their plans to either comply with all the standards (assuming the denial listed the standards they didn't meet) which may or may not propose the pier / dock in the same location.

3.) One of the objections raised last night was regarding moorings at the proposed pier site, which I understand by perusing some documents on the city website that the city has the discretion to move. Do you know how many moorings are in the area and how many would be affected? I am not certain on the number of moorings being impacted by the proposal. We are in the process of identifying the specific locations and "owner" information. I believe the number will be around 5-6, but can't answer with 100% accuracy until we have verified the locations (currently being researched).

I hope this helps
David

From: dinamendros@icloud.com <dinamendros@icloud.com>
Sent: Thursday, June 19, 2025 2:35 PM
To: Galbraith, David <David.Galbraith@biddefordmaine.org>
Subject: UNE Pier

Whitten, Nan

From: Whitten, Nan
Sent: Thursday, June 26, 2025 10:49 AM
To: Thomas Hatch; Planning Board
Cc: Galbraith, David; Alan Thibeault; Andrew Philippe; Tom Saucier; Center, Harry
Subject: RE: Question for Upcoming Planning Board Meeting - UNE Pier Proposal

Good Morning, Mr. Hatch

Thank you for raising your concern regarding Mr. Saucier's qualifications. Please see below for the provision taken from our ordinance Article II, Section 2, A7

Plans including the seal and signature of a Maine registered licensed land surveyor and/or professional engineer on the plat submitted, or as required by the board.
Mr. Saucier is a professional engineer, therefore his plans are acceptable.

Thank you again.

Nan Whitten
City of Biddeford
Office Manager
Planning & Development
207-284-9115

From: Thomas Hatch <thomas.hatch.trh@gmail.com>
Sent: Thursday, June 26, 2025 9:53 AM
To: Planning Board <planningboard@biddefordmaine.org>
Subject: Question for Upcoming Planning Board Meeting - UNE Pier Proposal

Caution: This is an external email. Please take care when clicking links or opening attachments. When in doubt, contact the IT Department

Hello,

I had a question concerning the survey done by Tom Saucier for the UNE Research pier. While reviewing the documents posted, I noticed that Mr. Saucier is not licensed as a land surveyor. You can verify this information here.

My question is - In order to submit plans for review, is the applicant required to submit a survey completed by a licensed surveyor?

Regards,

Tom Hatch
726 South St, Biddeford, ME 04005

Whitten, Nan

From: Whitten, Nan
Sent: Thursday, July 31, 2025 2:04 PM
To: matthew1@maine.rr.com
Subject: RE: request for information
Attachments: NOD Marine Science Building.pdf

Hi Matt,

I hope this is what you had in mind. If not, please let me know and I will keep digging!

Nan.

From: matthew1@maine.rr.com <matthew1@maine.rr.com>
Sent: Thursday, July 31, 2025 1:16 PM
To: Whitten, Nan <Nan.Whitten@Biddefordmaine.org>
Subject: request for information

Caution: This is an external email. Please take care when clicking links or opening attachments. When in doubt, contact the IT Department

Hi Nan, Can I get a copy of the UNE Marine Science Center planning board approval notice and conditions?

Matt Haas
36 meeting house road
Biddeford
207-590-3889

CITY OF BIDDEFORD, MAINE
PLANNING BOARD

P. O. BOX 586
BIDDEFORD, ME 04005

(207) 284-9115
(207) 286-9388 Fax

NOTICE OF DECISION

December 10, 1999

Ben Chretien
University of New England
11 Hills Beach Road
Biddeford, Maine 04005

SUBJECT: Conditional Use/Site Plan/Shoreland review of 26,000 s.f. Marine science and Research Center and Seasonal Dock System on the University of New England's campus at 11 Hills Beach Road, (Tax map 52/Lot 4).

Dear Mr. Chretien:

At its meeting of December 1, 1999, the Biddeford Planning Board reviewed your request for conditional use, shoreland, and site plan review for final approval of the construction of a 26,000 s.f. Marine Science and Research Center and Seasonal Dock System on the University of New England's campus at 11 Hills Beach Road. You and your assigns presented a site plan and other materials in support of your application.

As part of your presentation at the November 3, 1999 meeting, you submitted, and the Board granted the following requests for waivers:

Request No. 1
Ordinance and Item: Article VI, Section 49, Off-Street Parking and Loading.
Waiver Requested: Waive the parking requirements to allow seven parking spaces instead of 23.

Request No. 2
Ordinance and Item: Article VI, Section 26, Erosion Control.
Waiver Requested: Waive the maximum slope requirements to allow steeper slopes at selected locations.

Request No. 3
Ordinance and Item: Article XI, Part II, Section 5 B. 1.(a), Drainage.
Waiver Requested: Waive the maximum post development to allow a five-cfs increase.

This approval is based on the information presented to the Board. Any changes to this information without prior Planning Board approval shall void this approval.

FOR THE BIDDEFORD PLANNING BOARD:

Daniel B. Stevenson
City Planner

cc:
Jobie Chase
Matt Haas
Hills Beach Association
Mayor Dion
Code Enforcement
Planning File
File

CONFIDENTIAL
MEMORANDUM

To: Biddeford Planning Board

From: Harry B. Center, II, Esq., City Solicitor

Date: June 11, 2025

RE: UNE Pier Application

I am writing to supplement my memorandum dated June 9, 2025 regarding the pending University of New England pier application. Citizens have raised the issue regarding TEC Associates review of the initial application pursuant to the Harbor ordinance (Ordinance 74-35). Again, I caution the planning board that its review of this matter must be limited to the applicable city ordinances. There is not a provision within Article 14 §15(C), in the Shoreland zoning ordinance or site plan review, which authorizes the planning board to review the permission requirement in the city's Harbor ordinance.

Attached please find my memorandum dated July 8, 2024, which was sent to the former city manager. In that memorandum, I address the role of the harbormaster, specifically citing the city council's policy committee meeting of August 7, 2023, during which the current ordinance was presented and ultimately adopted by the council. Because the permission required from the harbormaster is not an opportunity to approve or deny an application for a pier, and the harbormaster role is "nothing but a facilitator," I provided a legal opinion that concluded an engineering firm could be delegated the task of reviewing the pier application and determining whether the application was complete. As stated in the memorandum, it is common for the City of Biddeford, including this planning board, to engage outside experts, such as traffic engineers, environmental engineers, and individuals to perform soil or water tests. In this matter, the city appropriately delegated the task of the harbormaster facilitating an applicant request pursuant to the ordinance. Lastly, I note that should there have been any interested party who would have had standing, the time for any judicial review of the city's activity in July and August 2024 has long passed.

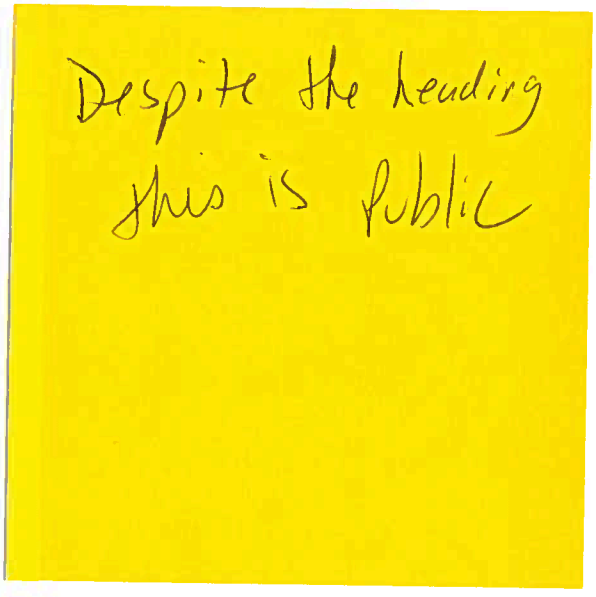

CONFIDENTIAL
MEMORANDUM

To: City Manager James Bennett

From: Harry B. Center, II, Esq., City Solicitor

Date: July 8, 2024

RE: Opinion and Interpretation of City Code 74-35

You have asked me to provide you with my interpretation and legal opinion regarding City of Biddeford Code of Ordinances Sec. 74-35, which relates to construction of marine piers. This code provision has become the subject of interpretation as a result of the University of New England's recent application for a marine pier. This current ordinance provision was recently amended in September, 2023. An August 9, 2023 policy committee meeting approved a proposed draft ordinance that was submitted by Chair of the Harbor Commission, John Schafer. Set forth below is the full section of the current ordinance:

Sec. 74-35. Construction of wharf, pier or landing regulated.

[Ord. of 4-20-1993, S 26-29; Ord. No. 2007.11, 3-6-2007; amended 2-19-2013 by Ord. No. 2013.7; 9-19-2023 by Ord. No. 2023.1021

(a) *No additions, alterations, new construction or/or changes to an existing wharf, pier or landing shall be made without prior permission of the Harbormaster.*

(b) *Permission for the construction of any new wharf or pier within the jurisdictional limits of the City shall not be granted without approval of the Harbormaster, along with federal, state, and local governing authorities.*

(c) *To obtain permission for any new wharf or pier, the applicant must provide the following information:*

(1) *A formal boundary survey that has been documented at the Registry of Deeds.*

(2) *A copy of the boundary survey showing the littoral zone, established by extending property lines seaward.*

(3) *A location map from a portion of a USGS topographic map or coastal chart.*

(4) *Distance to navigable channels or any federal navigation project.*

(5) *Mean high- and low-water boundary.*

(6) *A plan view on the drawing(s) that shows the location and dimensions of the applicant's structure(s) in relation to the applicant's property lines.*

(7) *A typical cross section/side view of the applicant's structures on the drawing(s).*

(8) *Evidence that owners of abutting properties have been notified of the applicant's intended project.*

(9) *Evidence that the 1) Maine Historic Preservation Commission, 2) Aroostook Band of Micmac, 3) Passamaquoddy Tribe of Indians: Pleasant Point; Indian Township, 4) Houlton Band of Maliseet Indians, and 5) Penobscot Indian Nation have been notified of the applicant's intended project.*

(10) *Completed applications to the Army Corps of Engineers, Department of Environmental Protection and Biddeford Code Enforcement. A regulatory permit from the Saco River Corridor Commission may also be required in some instances.*

(d) *The process to obtain permission for any new wharf or pier shall be facilitated by the Harbormaster. Initially, the Harbormaster shall be available to guide the applicant through the application process and finally, to sign off that all regulatory approvals have been obtained for construction.*

I have previously provided you with opinions relating to allegations regarding the current City of Biddeford Harbormaster's prejudicial and biased statements regarding the potential University of New England pier. I have opined those statements made by the current harbormaster prior to any formal application from UNE, such as "I will never approve the pier application in that location," constituted bias and a violation of the University's due process rights. You removed the current harbormaster from consideration of the UNE marine pier application. While the City determines who, on behalf of the City, will function in the role as harbormaster regarding the UNE marine pier application, you have asked me to review and provide you with a legal opinion as to what conditions and criteria would be applied to the marine pier application on behalf of the City, pursuant to the aforementioned code provisions.

The interpretation of the provisions of a municipal ordinance is a question of law. *Rockland Plaza Realty Corporation v. City of Rockland, 2001 Me. 81.* Numerous Maine Supreme Court Opinions provide that ordinance provisions should be given their plain and ordinary meaning, and any interpretation of ordinance language should be done in a manner to avoid absurd, illogical, or inconsistent results. *Wright v. Town of Kennebunkport, 1998 Me. 184.* There is a legal presumption favoring the validity of municipal ordinances and a municipal ordinance's constitutionality and reasonableness will be presumed. *Gabriel v. Town of Old Orchard Beach, 390 A.2d 1065 (Me. 1978).* In construing and interpreting municipal ordinances, a reviewing Court may review the purpose of the enactors to determine the intent of the ordinance. *Natale v. Kennebunkport Board of Zoning Appeals, 363 A.2d 1372 (Me. 1976).* Applying these legal principles regarding ordinance interpretation, I can provide you with the following opinions.

Subsection (a) and (b) of Sec. 74-35 expressly provide that any new construction of a pier, within the jurisdictional limits of the City of Biddeford, requires permission of the harbormaster. The issue is what criteria the harbormaster applies when determining whether to "grant permission." On its face, it would appear that the harbormaster has the authority to "deny" permission of a pier application. However, applying the aforementioned legal principles when reviewing the ordinance at (c) (1-10), it is my opinion that the role of a harbormaster granting permission is limited to a review of the information set forth in items 1-10. The harbormaster's review is limited to inspection of the items for completeness, then upon the applicant's receipt of all other agency's approval, permission is then granted to the applicant to proceed to the City Planning Board and Code Office.

The ordinance provides at subsection (d), that the harbormaster shall ***guide*** the applicant through the application process, and ***"sign off that all regulatory approvals have been obtained for construction."*** In my opinion, a plain and ordinary interpretation of the entire ordinance set forth in Section 74-35 leads to the conclusion that the harbormaster's role in granting permission is limited to an initial determination that all of the items set forth in (c) (1-10) have been completed and submitted to the appropriate governing bodies, and then a subsequent determination as to whether those agencies have granted approval.

When interpreting ordinance provisions, the court looks to the legislative intent of the enacting body. A review of the intent of the City Policy Committee and ultimately the City Council's intent supports my opinions regarding interpretation of the ordinance. Ordinance 74–35 was initially reviewed by the city Council subcommittee, the Policy Committee. At a public meeting on August 7, 2023, chairperson of the Harbor Commission, John Schaeffer, presented the proposed ordinance. During that meeting, City Counselor, Norman Belanger asked Mr. Schaeffer, whether the harbormaster was the person who issued a permit for a new pier. Mr. Schaeffer expressly responded, *"that is absolutely not the case."* Mr. Schaeffer further explained that the harbormaster is *"nothing but a facilitator"*. This legislative intent, combined with reading the ordinance as a whole, leads to the legal conclusion that the harbor-master's role is to guide an applicant through the process, and determine whether the items in subsection (c) (1-10), are complete and ultimately approved by the other agencies.

Construing the ordinance in its entirety and a review of the legislative (City Council) intent unequivocally evidences a clear intent defining the role of the harbormaster as a facilitator. An applicant for a new pier must, as a condition precedent, initially establish that items 1 through 10 are complete. Upon return to the harbormaster following completion of those items and receipt of approval from the regulatory bodies, the harbormaster, then ***"signs off"***. The express use of the term ***"signs off"*** establishes the role of the harbormaster in the process.

It is further my opinion that review of items 1 through 10 are not exclusively delegated to the appointed harbormaster. Facilitation and review of those items may be delegated to a person or entity with technical expertise, such as an engineering firm. It is common for the City to engage independent experts to review permit applications such as traffic engineers, environmental engineers and others depending on the nature of the approval sought. Because the review process is not the final approval by the City, such delegation is permissible. It is important to note that the harbormaster, the code enforcement officer and other individuals in city offices, such as

planners and assistant code personnel, are generally not licensed, professional engineers, nor do their approvals act as performing those expert reviews. The Planning Board, Code Office and other City employees rely on submissions from the applicant such as a stamped professional engineer's approval on plans submitted, structural plans, and other highly technical information that is beyond the scope of city officials. The city does not want to be held liable for the soundness of any project, nor the technical approvals of those projects. City officials rely on the applicant's expert's submitted plans and/or approvals from other regulatory bodies such as the Army Corp of Engineers and the State Department of Environmental Protection in the case of marine piers.

It is my legal opinion that the harbormaster does not issue or approve a permit to construct a marine pier. Pursuant to the ordinance, the harbormaster acts as a facilitator to ensure the prerequisites have been submitted, then once all those approvals are obtained then performs the ministerial act of signing off/granting permission to proceed to the City Planning Board and Code Office. The City Shoreland Zoning Ordinance, as well as the duties of the code enforcement officer to issue permits for structures, provide the city with the necessary final review of the process and protect the City's interests. The harbormaster role pursuant to the ordinance is limited to being a facilitator of the application and ultimately signing off, moving the application forward to the Planning Board and Code Office.

CONCLUSION

1. Reading the ordinance as a whole and applying legal principles for interpretation of the ordinance, the harbormasters role is as a facilitator to ensure that an applicant for a marine pier has completed items in section (c) 1-10 as a condition precedent.
2. The City may delegate the harbormaster tasks (facilitation of submission to AOC, DEP, etc.) and ensuing completeness, to a third party such as an independent engineer or firm.
3. Once an applicant has received information that includes APPROVALS from the agencies that have expertise in reviewing such projects, the harbormaster performs that ministerial task of granting permission to the applicant or "signs off", pursuant to section (d) of the ordinance.
4. Once the harbormaster signs off on the marine pier application, the Planning Board and Code office review the project and ultimately decide whether grant approval and issue the appropriate permits, pursuant to the City's Shoreland Zoning Ordinance and Floodplain Management Ordinance.

Whitten, Nan

From: Fishing Woes <fishingwoes@gmail.com>
Sent: Wednesday, August 6, 2025 9:36 AM
To: srichelieu@meltn.org
Subject: Finally, SOMEBODY has the courage to speak up

Caution: This is an external email. Please take care when clicking links or opening attachments. When in doubt, contact the IT Department

"Something seems fishy about this." (Roch Angers, Biddeford Planning Board member, speaking to Biddeford City Council, 8/5/25)

Last week Biddeford's mayor refused to answer any questions about the impact to mooring owners from UNE's proposed pier. Simply refused. So much for government that works for the people.

Of course that's not a surprise, given that the City was left unrepresented at the Saco River Corridor Commission, the U.S. Army Corps tossed out every last piece of public comment, the DEP refused to hold a public hearing, and many other egregious examples of actively shutting the public out. That's how City leadership has been operating.

Thankfully, Mr. Angers had the courage to tell the Mayor and Council last night that all of this is just plain wrong. The Planning Board meets tonight at 6:00 p.m. at Biddeford City Hall. Here is an online story about what Mr. Angers told Biddeford's elected leaders last night: https://biddeford-gazette.com/2025/08/06/planning-board-member-blasts-mayor-city-council-over-une-proposal-something-feels-fishy/

Whitten, Nan

From: Angers, Roch
Sent: Tuesday, August 5, 2025 7:51 PM
To: Planning Board; Center, Harry; Galbraith, David; Whitten, Nan; Iriqat, Adi; Grohman, Martin; LaFountain, Liam; Lessard, Marc; Ortiz, Doris; Emhiser, William; Whiting, Scott; Beaupre, Roger; Doughty, Dylan; Gross, Neva; Belanger, Norman; Phinney, Brian
Cc: angersrock@gmail.com
Subject: My statement at the council meeting on Tuesday night

Good Evening: My name is Roch Angers and I live at 26 Cathedral Oaks Drive in Biddeford.

Some of you may know me but others may not. I was a former city councilor & volunteered & appointed to the Planning Board by this present Mayor and this council. My term expires in 17 months. I want to make sure that you know that I am not representing the planning board but giving you my own opinion and only my opinion.

I would like to bring something up about the Pier project at UNE. This project I believe has some real hard questions to be answered and I believe it is tainted. UNE as far as I am concerned has not been transparent with the public and the mooring owners and have not been given the time of day during this whole process.

Why was UNE so quiet in its presentation to the Army Corp of engineering? Nobody got notified and found out later that no public comment was to be allowed. Why were they not up front about the DEP presentation and letting people know they were going to present their plans about the Pier? Saco River Corridor had their meeting and lo and behold the members from the City of Biddeford and the alternate were not present to vote on this matter. Something fishy!!!! Don't you think?

The Coce of ordinances States in Chapet 74 Waterways Article 2 Harbor Division 2. Harbor-master Section 74-51 Criteria.

The Criteria for the Harbormaster is as follows

1. **Must be a voting resident of five years**
2. **Must have at least five years of marine experience with a minimum of two years on the ocean**
3. **Must attend annual Maine Harbormasters Association training seminar.**

The Harbormaster in the city website is Mr. Larivière. He was removed by the City manager on the pier issue as he was told that he was biased on the UNE project and that someone else would make the decision in his place.

Well lo and behold the City manager at the time appointed a railroad engineer in his place to become the facilitator of this project. This person does not met the criteria of the code of Ordinance for the city of Biddeford Chapter 74 Article 2, Harbor Division 2 Harbormaster Waterways or State of Maine MRS Title 38 Chapter 10 operations of Vessels of the State of Maine. I was told by our City Solicitor Harry Center that the railroad engineer was not a voting resident of five years, and he did not have five years of Marine experience with a minimum of two years on the ocean and never attended Annual Maine Harbormaster

Association training seminar. I was told this 2 weeks ago at the planning Board meetings and documented in the minutes of the meeting. These are the Biddeford codes of ordinances & Maine State Title 38 Subsection 2 that you as council members must follow and the planning board should follow also. These statutes from Maine and the ordinances are not written on a whim!! They were written for a purpose to follow the law. We are supposed to follow those LAWS.

Tomorrow night at the planning board meting I am going to try to table this vote on the UNE Pier. My reasoning is this as I think that the council should be making this decision as a whole as you are the representative of the cit and you are the ones who makes policy decisions and make sure laws are abided to. I am not trying to tell you what to do but asking that if and maybe if this passes at the Planning Board that you take a hard look at this Pier project and ask yourself if everything is on the up and up. I cannot understand why you as council members were never informed about this project. It should have started with you as a council and not just the Mayor. Thank you for letting me speak in front of you tonight with my concerns. Speaking as a taxpayer of the City of Biddeford.

Thanks for your time

Roch A Angers

Get Outlook for iOS

Whitten, Nan

From: matthew1@maine.rr.com
Sent: Tuesday, August 5, 2025 3:26 PM
To: Whitten, Nan; Plotkin, Alexa
Subject: UNE comments
Attachments: COB final.docx

Caution: This is an external email. Please take care when clicking links or opening attachments. When in doubt, contact the IT Department

I am submitting the following for the 8/6 planning board meeting regarding the UNE project.

I have spoken regarding the UNE project 3 times and have yet to receive a single answer to any of my questions. I am again requesting the Board, who are the final decision makers to answer these questions related to Biddeford's Shore land zoning ordinance:

Section 1. Purposes. [Ord. of 9-15-1998(4)]

The purposes of this ordinance are to:

to protect fish spawning grounds, aquatic life, bird and other wildlife habitat;

to protect commercial fishing and maritime industries; This project does not help me as a Maine guide or any of the working fisher people. It will negatively impact us.

to conserve shore cover, and visual as well as actual points of access to inland and coastal waters; to conserve natural beauty and open space; We all use this area to access the river, the beach and the fish. **How does this project conserve natural beauty and open space?**

SZO sec 15 part C The facility shall be no larger in dimension than necessary to carry on the activity and be consistent with the surrounding character and uses of the area

The site walk was helpful to appreciate the size and scale of this project. Speaking of scale, this site walk confirmed that the numerous regulatory requirements make this so massive it is no longer meet Sec 15c. **What is the next largest privately owned dock comparable in size that supports this requirement under the ordnance? ON what basis does the UNE project meet this standard?**

Sec 15 sec 10a When necessary, the removal of trees and other vegetation to allow for construction equipment access to the stabilization site via land must be limited to no more than 12 feet in width. When the stabilization project is complete, the construction equipment accessway must be restored.

The entrance will be a 20' road (not ' 12 per the law), combined with the turn around and the building as a backdrop will rip open the vegetation to a massive scale. Fire department requirements conflict with an ordinance, the ordinance-the law- still stands. **How is the project in compliance with this requirement? How is the city reconciling the SRCC approval of a 16' road, vs the 20' road being proposed?**

Ms. Alexa Plotkin
Chair, Biddeford Planning Board
Biddeford, Maine

I've always been impressed with the way you handle planning board meetings, until now.

In reference to the last meeting where you asked Mr. Schafer to "take your seat": Harry Center, with his body language and verbal comments (mic off unfortunately, so its not on the video), tried to interrupt Mr. Schafer's presentation to the board and those attending the meeting.

Mr. Center should have been the one to be "called out" for interrupting Mr. Schafer. He could have commented on what Mr. Schafer said after he was finished, and you should have diplomatically (as always, in most cases) reprimanded Mr. Center for his sophomoric antics.

Personally I would have liked to hear what Mr. Schafer had to say.

You owe Mr. Schafer a public apology.

This is between you and me and will not be mentioned to anyone else...thank you for your thoughtful and dedicated service to the community.

Very Sincerely,

(Name withheld out of fear of retribution by power hungry ego-maniacs defending the UNE pier proposal)

p.s."

1.It is more than apparent that this permit process is not about what's good for the community, but good for UNE, regardless of the impact on the community. For Mr. Center (and Alan Thibeault) it's about winning, not about what's best for the community as a whole.

2.No one in the community of boaters in the Biddeford/Saco Area has spoken positively about the location of the pier that UNE has chosen. Mr. Center stated in the last planning board meeting that if the board does not grant UNE the location it has chosen it will appeal the decision and he will be unable to defend the decision based on existing regulations/code (?).....not because he can't but because is on the inside of UNE's cabal. You need a new lawyer. FWIW, it was brought up in previous meetings that the Army Corp of Engineers (paraphrasing what was presented to the planning board) has the responsibility to consider alternative locations for projects that fall under its area of responsibility, which has not been done.

3.UNE, over time, has become a microcosm of what's been going on in this country for the last 25 years, maybe more. Their focus/motive is on greed and profit rather than their original goal of just becoming a well respected university, and a good neighbor to the community.

Concerned Citizen
General Delivery
Biddeford, Maine 04005

SO. MAINE P&DC 041
28 JUL 2025 PM 2 L

Ms. Alexa Plotkin
Chair, Biddeford Planning Board

Whitten, Nan

From: matthew1@maine.rr.com
Sent: Friday, August 1, 2025 3:24 PM
To: Whitten, Nan
Subject: UNE Pier
Attachments: COB SRCC (1).docx

Caution: This is an external email. Please take care when clicking links or opening attachments. When in doubt, contact the IT Department

8/1/2025

I'm writing to request that the planning board table UNE's site plan review. At the last meeting Planning Board members referenced the Saco River Corridor Commission's "approval" of this project as part of their decision making. It's imperative to understand a few key facts regarding the Soccer River Court Commission's approval before using it as a basis for approval.

Fact: the SRCC review that was cited by the planning board **excluded** all structures over the water. Their review was limited to only the onshore structures up to the high-water line. Furthermore, their review standards are completely different standards that the Planning Board is required to review under the Shore Land Zoning Ordinance. The SRCC encourages any board member to contact them to better understand the extend, limits and specific standards of their review.

Fact: The University of New England submitted an inaccurate application to the SRCC in that it failed to acknowledge their prior requirements and limitations to the existing 250 foot no build zone. As stated in previous documents submitted to the board, in 2001 the SRCC imposed a 250 no build zone.

Specifically, during the meeting at the SRCC in 2001 where this was agreed in order to gain 50' height on the dormitories, in response, Sandra Featherman stated on the record that **"the University has absolutely no intention to build within the 250 of the river, and that the city as well as the University believe the buffer the be very sensitive and necessary for the protection of the river."**

The intent of UNE accepting this condition was clear. The SRCC reason was crystal clear as the minutes indicated. No more building in the 250 buffer zone period. No exceptions.

Fact: The SRCC has confirmed that they we not aware of the 250 no build zone in their most recent deliberations on UNE's proposed dock. Because of this I have requested that the SRCC allow us to appeal their decision.

I have spoken with Cheri from the SRCC, and she has agreed to speak to the Policy Committee regarding this issue later in August.

I ask the planning board to allow this process to be completed. As required under the Shoreland Zoning Ordinance, Article 7. Sec 7. Whenever a provision of this ordinance conflicts with or is inconsistent with another provision of this ordinance or of any other ordinance, regulation or statute administered by the City of Biddeford, the more restrictive provision shall control, except that where there are conflicts or inconsistencies between Section 12 (Nonconformance) of this ordinance and any other ordinance, regulation or statute administered by the City of Biddeford, Section 12 (Nonconformance) of this ordinance shall prevail.

Another month will allow the SRCC to complete its work, and allow the Planning board to better understand the significance of the SRCC role in this project.

Sincerely,

Matthew Haas

36 Meeting House Road

Biddeford Maine

Whitten, Nan

From:	Hills Beach John <hillsbeachjohn@yahoo.com>
Sent:	Wednesday, July 30, 2025 10:02 AM
To:	Grohman, Martin
Cc:	Randy Seaver; tvmail@wgme.com; wmtw@wmtw.com; desk@newscentermaine.com; newsdesk@sacobaynews.com; sean.a.murphy@charter.com; josh@themainemonitor.org; kate@themainemonitor.org; micaela@themainemonitor.org
Subject:	Official request for "credible news" about UNE pier

Caution: This is an external email. Please take care when clicking links or opening attachments. When in doubt, contact the IT Department

Dear Mayor Grohman,

This is Day 7, and no answers. I'm astonished that your choice, as a declared candidate for office, was to just ignore the two questions I posed to you a week ago.

On May 5, 2025, the Biddeford Gazette published an article, "Mayor defends city review of UNE pier proposal." That review purposefully excluded the professional knowledge of local experts who know the river, and you aren't on the record anywhere as having argued that local knowledge of the Saco River should have been considered. You and your Administration successfully pulled the right levers leading to final approval for the pier, and I've got to tip my hat to you. You outmaneuvered local opposition to UNE's preferred location, and we were no match for you.

Of course, the only thing you can't do now is run away from your success. On behalf of the community members to whom I report, I repeat two questions to the man who wants to be re-elected to Biddeford's top leadership position.

1. What person now working for the city will boot the mooring owners from the spots on the river that they have lawfully held for many years?
2. What city authority will direct the city's agent to take that action, and hand over those mooring locations to UNE?

This is not some theoretical exercise. These are two legitimate and pressing questions that need to be answered now, because Alan Thibeault told the Saco Bay News that UNE wants to begin construction this fall. Your job is to sweep those mooring owners out of the way, and soon.

Hard to believe, but at the symposium on local news last night at McArthur Library you said, "I'm constantly looking for credible news. With so many different things online, it can be difficult to find credible news." This is your opportunity to relay credible news to your constituents. You have been asked two questions, and I look forward to passing on your answers to those who want to stay informed.

Sincerely,

John Schafer
Hills Beach, Biddeford, Maine

P.S. I have made sure to copy The Maine Monitor and the Saco Bay News to this email.

Whitten, Nan

From: Fishing Woes <fishingwoes@gmail.com>
Sent: Monday, July 28, 2025 12:12 PM
To: attorney.general@maine.gov
Subject: UNE's desired pier location unavailable

Caution: This is an external email. Please take care when clicking links or opening attachments. When in doubt, contact the IT Department

---------- Forwarded message ---------
From: **Fishing Woes** <fishingwoes@gmail.com>
Date: Mon, Jul 28, 2025 at 12:06 PM
Subject: UNE's desired pier location unavailable
To: <jherbert1@une.edu>
Cc: <wmtw@wmtw.com>, <tvmail@wgme.com>, <desk@newscentermaine.com>, <srichelieu@mettn.org>, <dinamendros@gmail.com>, <newsdesk@sacobaynews.com>

Mr. Herbert:

On May 27, 2025, you sent a broadcast email to the community asking that we contact you "with any questions" about UNE's pier application. The mooring owners wrote to you in early July with one question. Consistent with how UNE treats this community, you did not reply.

Mooring owners have been told by city officials that there are no plans to relocate any moorings. Mooring owners informed UNE several times that they are not moving. That remains true. The place on the Saco River that you want for your new pier remains unavailable to you.

Alan Thibeault recently told a reporter that Biddeford now needs to "work with mooring owners to relocate the two impacted moorings."

That won't be happening. And so therefore the president of UNE is asked once again. When, against whom, and on what legal basis will you be filing litigation to bulldoze mooring owners out of the way?

Whitten, Nan

From: Hills Beach John <hillsbeachjohn@yahoo.com>
Sent: Thursday, July 24, 2025 9:47 AM
To: Grohman, Martin
Cc: Randy Seaver; srichelieu@metln.org; Dina Mendros; newsdesk@sacobaynews.com
Subject: UNE pier: two final questions

Caution: This is an external email. Please take care when clicking links or opening attachments. When in doubt, contact the IT Department

Good morning, Mayor Grohman.

As you know, I resigned from the harbor commission just over a year ago, seeking more transparency in the regulatory review of UNE's proposed pier for the Saco River. At one point you invited me to your office to discuss the matter, along with the city attorney. Thank you for that opportunity.

The planning board will soon vote to grant final approval to UNE's application. The result of that impending decision is that *no* professional, who knows the river and works for the city, ever approved this application after personally getting onto the river to evaluate current, river depth, wind, extreme storms, tides, other moorings, and so forth. (Nor did any state or federal regulator.) That was a gaping hole in the Biddeford's regulatory process. You are probably aware that UNE neighbors and those who use the river, both in Biddeford and Saco, are now bitter and angry about the flawed regulatory process that *actively excluded* local knowledge of the river. They are especially upset about the former city manager's role in facilitating events that gifted UNE the upper hand. It's hard to believe that's the way things were allowed to happen, right to the very end. As you prophesied in the Saco Bay News a year ago, "At this point they (UNE) are holding all the cards."

I read in the Biddeford Gazette that you are running for re-election. Congratulations. Coincidentally, your first mayoral term ran almost concurrently with the UNE controversy from start to finish. A few days ago, in anticipation of final success before the planning board, Alan Thibeault told the Saco Bay News, "…the city will then need to work with mooring owners to relocate the two impacted moorings." I am winding down my personal involvement in this issue, but before I (eagerly) retire as a community organizer, I have two questions to ask on behalf of my friends and neighbors.

As Biddeford's top government leader, you have been privy to policy and strategy discussions during the last two years. As I understand the current situation the mayor has no power, we don't have a city manager, the former city manager obliterated the relevance of the harbormaster, the assistant harbormaster, and the harbor commission, and the mooring owners have made it clear that they're not going to move. UNE holds all the cards and wants to start construction this fall. Can you tell me (and the voters) what person now working for the city will boot the mooring owners from the spots on the river that they have lawfully held for many years? The second question is, what city authority will direct the city's agent to take that action, and give those mooring locations to UNE?

Thank you very much. I ask these two questions not only as the former chair of the now crippled and dormant harbor commission, but as a voter who proudly displayed a "Grohman For Mayor" sign on my lawn in the Fall of 2023. I look forward to your reply.

Sincerely,

John Schafer
Hills Beach, Biddeford, Maine

Whitten, Nan

From: Hills Beach John <hillsbeachjohn@yahoo.com>
Sent: Wednesday, July 23, 2025 9:17 AM
To: Lewis, Kayla; Angers, Roch; Beaudette, Stephen; susan.deschambault@biddefordmaine.org; Patoine, Larry; Plotkin, Alexa; Dubois, Matthew; Galbraith, David
Cc: Whitten, Nan; Randy Seaver; srichelieu@metln.org; Dina Mendros; newsdesk@sacobaynews.com
Subject: UNE pier: final submitted comments

Caution: This is an external email. Please take care when clicking links or opening attachments. When in doubt, contact the IT Department

Dear Biddeford Planning Board:

I have written and sent this email to you on Wednesday, July 23, 2025. As of this morning, no future Planning Board meeting is scheduled on the city's website. Encouraged by Mr. Galbraith's articulation of his department's complete transparency at the last Planning Board meeting, I would like to respectfully make a request.

At the future Planning Board meeting during which UNE will seek final approval for its new pier, could Mr. Galbraith, the Chair, or a Member of the Board please read my remarks into the record, so that those watching at home can know that the Board is fully aware of this information before it votes. Thank you very much for the consideration. My testimony:

Preparation of litigation against the City of Biddeford, to be filed after the Planning Board grants final approval to the University of New England (UNE) for a new marine sciences research pier, is easily based on an undisputed set of facts.

It is the duty of each Member to fully review all information and testimony supplied to the Board. Therefore, all three Members of the Planning Board who voted to grant preliminary approval to UNE's application were aware of these facts on July 16, because they were available in emails and documents contained in the packets of information that were supplied to the Board, and in public testimony given to the Board.

On July 16, 2025, the three Members who voted in the affirmative knew each of the following to be true.

1. Mr. Patoine requested a copy of the application that UNE filed with NIST, and UNE refused to provide it.
2. Daryen Granata, Vice President & Training Coordinator for the Maine Harbor Masters Association, wrote to the city manager on June 4, 2024, "Section 74-35b of the Biddeford Harbor Ordinance states, 'permission for the construction of any new

wharf or pier within the jurisdictional limits of the City shall not be granted without approval of the Harbormaster.'"

3. In the same email, Mr. Granata wrote, "We recommend that you work within the review hierarchy laid out in your harbor ordinance."
4. In the same email Mr. Granata laid out the normal "chain of command" for municipal regulatory review of UNE's application: harbormaster, or assistant harbormaster, or finally, the harbor commission. None of these regulatory entities reviewed or approved UNE's application.
5. In the same email, Mr. Granata described the city manager's plan to circumvent normal regulatory review as "inconsistent with the prevailing law."
6. On July of 2025, Mr. Granata confirmed in writing that, "The Maine Harbor Masters Association has no record of Mr. Wayne Duffett attending Basic Harbor Master Training and Certification." In other words, the vendor that Jim Bennett hired while trying to circumvent Biddeford's municipal regulatory process, as outlined in Section 74-35b of the Biddeford Harbor Ordinance, is not a certified harbormaster in the State of Maine.
7. On June 11, 2025, Alan Thibeault of UNE confirmed in a letter to the city planner, "The Ordinance begins with Section 74-35(a), which states: "No additions, alterations, new construction or/or changes to an existing wharf, pier or landing shall be made without prior permission of the Harbormaster."
8. In the same memo, Mr. Thibeault cited language from Section 74-35(d) and wrote "...the Harbormaster shall...sign off that all regulatory approvals have been obtained for construction." Wayne Duffett is not a harbormaster in Biddeford, or anywhere. Paul Lariviere remains Biddeford's harbormaster. Mr. Lariviere has not "signed off" on any such document.
9. On June 25, 2024, Heather Stukas of the U.S. Army Corps of Engineers instructed her colleagues to "follow-up" to make sure the latest UNE location and design was acceptable to Biddeford's harbormaster, and that never happened.
10. In its application UNE argued strenuously that pier location was previously approved by virtue of a previous Board's approval of a Master Plan. UNE's argument was specious. Everyone knows approval of a conceptual Master Plan is not Planning Board approval of a specific application.
11. There can be no doubt about the previous fact. That's why the city manager wrote to UNE on August 19, 2024, "While I don't believe it is necessary, let me emphatically state that this communication does not in any form, imply that the City has in any way made a determination that the location submitted has been approved."
12. Finally, the three Board members voting to approve the application on July 16, 2025 knew that Biddeford's delegate to the Saco River Corridor Commission abstained from all discussion and voting on the application, leaving Biddeford residents completely unrepresented. The DEP Commissioner refused a request for a public hearing. No certified harbormaster reviewed or approved the application. UNE made sure the public was not invited to the site survey it conducted for the Bureau of Submerged Lands. Perhaps most maddening of all, the U.S. Army Corps of Engineers notified Biddeford residents that voluminous testimony and documentation that had been submitted to that agency was summarily discarded.

The items listed above are a set of facts, not opinions. Included in that set of facts is the conclusion by the Maine Harbor Masters Association that Biddeford's intentional deviation from its harbor ordinance was "inconsistent with the prevailing law." To use language that is more direct, it was illegal.

The Planning Board was specifically warned not to *deny* the application based on currents, tides, water depth, and so forth. That is understood and not in dispute. But the Planning Board also knows that no independent professional has looked at these things, either. Therefore, we all know when the Board grants final approval tonight, *nobody* who knows the river will have considered those critical factors. Through no fault of its own, the only information the Planning Board had was submitted by UNE's paid engineers, sitting behind computers.

The Code of Ethics guides the Board to "explicitly evaluate all facts, alternatives, means, and consequences relevant to its decisions." One of those facts is that the Planning Board *knows* that no professional who knows the river, working for the city, has ever approved this application *after* evaluating current, river depth, tides, other moorings, and so forth. Nor has any state or federal regulator. That is a gaping hole in the regulatory process. Any proof of such a critical examination of those physical realities, by a certified and experienced *independent* authority, is missing from the application. The Board is aware of this.

Nevertheless, the vote tonight won't be to table the application until that gaping hole is filled. It will be --- knowing what the Board knows --- to approve the application. That needs to be made clear to all parties concerned, especially the people of Biddeford. I appreciate you introducing this set of facts into the public record.

In conclusion, I thank each Planning Board Member for your public service, and I also thank all Saco & Biddeford residents who have been relaying their concerns to me since the beginning of 2024. Those who actually know the river have a lot of practical wisdom.

Respectfully,

John Schafer
Hills Beach, Biddeford

Whitten, Nan

From: Public Affairs <publicaffairsinfo@gmail.com>
Sent: Tuesday, July 15, 2025 9:36 AM
To: randyseaver01@gmail.com; wmtw@wmtw.com; desk@newscentermaine.com; tvmail@wgme.com
Subject: River mariners challenge UNE president to reveal pier lawsuit

Caution: This is an external email. Please take care when clicking links or opening attachments. When in doubt, contact the IT Department

River mariners challenge UNE president to reveal pier lawsuit

July 15, 2025

MEDIA CONTACT, MOORING OWNERS:

1. Capt. Shawn Tibbetts, captshawntibbets@gmail.com, 207-502-0368
2. Michael Ramunno, mramunno@maine.rr.com, 207-423-3650

(Biddeford, Maine) Because the spot on the Saco River that the University of New England (UNE) wants for a new pier is unavailable, to seize it the university will have to file a lawsuit to expel current mooring holders. Those who own the moorings want university president James Herbert to be transparent about the issue at a planning board meeting tomorrow night.

"We're not moving, and we are certain the city will take no action to forcibly remove us from the moorings we've held for many years, in good standing and in good faith," said Shawn Tibbetts, a commercial fisherman who owns a mooring on the river. "UNE has to stop tap dancing around this issue, and address it head on in front of the planning board."

UNE wants to build a new marine sciences research pier on the lower Saco River, near where the river empties into the Atlantic Ocean. With the help of U.S. Senator Collins, UNE secured a $3.5 million grant from the National Institute of Standards and Technology (NIST), to help with construction. But the local mooring holders already occupy UNE's preferred location, and have for years.

Herbert wrote a broadcast email to the coastal community on May 27 and promised to answer "any question" about UNE's pier proposal. The mooring holders wrote to Herbert about ten days ago and asked, "when, against whom, and on what legal basis will you be filing litigation to bulldoze mooring owners out of the way?"

Biddeford's harbormaster says he has no plans to move any current moorings. That's why Tibbetts and his fellow mooring holders are adamant that UNE can't have the location they want. If the university fails to detail a plan to forcibly remove moorings, then UNE's planning board application is incomplete. Tibbetts said an incomplete application is likely to be denied, and UNE can't dodge the issue any longer.

"It is improper procedure to expect the planning board to approve an application in a location that is off limits. UNE has no power to assign, remove, replace or commandeer moorings, and Mr. Herbert has been aware of this issue since May 14th. The university's had more than eight weeks to come up with a plan, and they haven't done it. They have to answer the question --- who are they going to sue?"

The Biddeford Planning Board meets tomorrow, Wednesday, July 16, at Biddeford City Hall. The meeting begins at 6:00 p.m.

###

Whitten, Nan

From: Tom Hatch <thatch8099@gmail.com>
Sent: Wednesday, July 23, 2025 12:39 PM
To: Galbraith, David
Cc: Whitten, Nan; Iriqat, Adi
Subject: Re: UNE Research Pier

Caution:This is an external email. Please take care when clicking links or opening attachments. When in doubt, contact the IT Department

Thank you David
I would like to schedule a short meeting next week to discuss some potential ideas/solutions.
How about Tuesday at 9?
Thanks in advance
Tom Hatch
Sent from my iPhone

> On Jul 21, 2025, at 12:04 PM, Galbraith, David <David.Galbraith@biddefordmaine.org> wrote:
>
> Mr. Hatch, I am planning on being in the office during our office hours the week of the July 28th. Monday's tend to be my busiest day of the week but I will certainly make time for you that week. I would be happy to schedule a meeting with you that week if you let me know your available times. My assistant (Nan Whitten) is out of the office this week but will be returning on the 28th. Nan has full access to my calendar so can help coordinate a date and time that works for you.
>
> Thanks again
> David
>
> -----Original Message-----
> From: Tom Hatch <thatch8099@gmail.com>
> Sent: Monday, July 21, 2025 11:43 AM
> To: Galbraith, David <David.Galbraith@biddefordmaine.org>
> Subject: Re: UNE Research Pier
>
> Caution:This is an external email. Please take care when clicking links or opening attachments. When in doubt, contact the IT Department
>
>
>
>
> Good Morning David
> Thank you for the response; it's frankly refreshing. I will be in the area the week of July 28TH so if you have any time that week I would be happy to meet with you.
> Thanks
> Tom Hatch

> Sent from my iPhone
>
>> On Jul 21, 2025, at 8:37 AM, Galbraith, David <David.Galbraith@biddefordmaine.org> wrote:
>>
>> Mr. Hatch, I really appreciate your email. I apologize that the Mayor and City Manager haven't returned your messages. I would be happy to meet with you to discuss your concerns. I, like you, would also like to be able to bring forward a solution regarding any relocating of moorings as I do believe that you and any other mooring owner impacted by this development should be accommodated. Would you like to set up a time where we could meet / talk about possible solutions to these issues I inherited.
>> Thank you and I look forward to meeting with you.
>> David
>>
>> -----Original Message-----
>> From: Tom Hatch <thatch8099@gmail.com>
>> Sent: Friday, July 18, 2025 12:19 PM
>> To: Galbraith, David <David.Galbraith@biddefordmaine.org>
>> Subject: UNE Research Pier
>>
>> Caution:This is an external email. Please take care when clicking links or opening attachments. When in doubt, contact the IT Department
>>
>>
>>
>>
>> Good Day David,
>> My name is Tom Hatch and I happen to be the owner of a mooring that will be affected by the UNE Research Pier. I read the quote attributed to you in the Gazette from the town meeting on 7/16 suggesting that this process has been "Open and accommodating". While I do not agree with folks who wish to disparage you, I do have to take issue with your statement that this process has been open and accommodating. At least from my perspective it has been the complete opposite. I say this because I have reached out to numerous folks including the mayor, the city manager and even Susan Collins. I have only asked simply, what are my rights and responsibilities as a mooring owner. To this day, I received no response. Let me repeat that, "No Response". Not even the courtesy of a response indicating that they got my email. Further, there has not to date been any communication with me from any authority about the future of my mooring. So I think you would agree that from my perspective, "Open and accommodating", couldn't be further from the facts.
>> I would think at this point, if it becomes the city's responsibility to displace us, an "Open and accommodating" gesture would be to reach out to the affected mooring holders giving us plenty of time and options to help us make the best possible decisions concerning our displacement.
>> This would certainly create some goodwill and I'm sure lower some of the animosity with the city and UNE.
>> As usual, I would like to get a courtesy response detailing the city's plans or maybe a contact person to go to. Anything less would not be open and accommodating, Sincerely Tom Hatch Mooring #12 UNE Research Cove
>>
>> Sent from my iPhone

Whitten, Nan

From: Hills Beach John <hillsbeachjohn@yahoo.com>
Sent: Friday, July 25, 2025 9:31 AM
To: Randy Seaver; srichelieu@metln.org; Dina Mendros; newsdesk@sacobaynews.com; cfox@metln.org
Subject: Fw: A message to Ms. Plotkin & the Board

Caution: This is an external email. Please take care when clicking links or opening attachments. When in doubt, contact the IT Department

I would like to thank our local reporters who worked so diligently to report on this story for the last year and a half. My final effort, to the Biddeford Planning Board this morning, is copied below.

Regards,

John Schafer
Hills Beach, Biddeford, Maine

----- Forwarded Message -----
From: Hills Beach John <hillsbeachjohn@yahoo.com>
To: alexa.plotkin@biddefordmaine.org <alexa.plotkin@biddefordmaine.org>
Cc: stephen.beaudette@biddefordmaine.org <stephen.beaudette@biddefordmaine.org>; roch.angers@biddefordmaine.org <roch.angers@biddefordmaine.org>; susan.deschambault@biddefordmaine.org <susan.deschambault@gmail.com>; kayla.lewis@biddefordmaine.org <kayla.lewis@biddefordmaine.org>; larry.patoine@biddefordmaine.org <larry.patoine@biddefordmaine.org>; matthew.dubois@biddefordmaine.org <matthew.dubois@biddefordmaine.org>
Sent: Friday, July 25, 2025 at 09:17:42 AM EDT
Subject: A message to Ms. Plotkin & the Board

Good morning, Alexa.

With this message, I conclude my personal involvement trying to bring sunlight and open discussion to the UNE pier issue.

I want to apologize to you personally for losing my cool at the July 16 planning board meeting. I'm sure you could see that something got under my skin, but…no excuse. I put you in a tough spot, and I didn't mean for that to happen. Further, I cost myself the opportunity to support the astute observations of Members Angers and Lewis about the fundamental flaws in this particular regulatory review process. I apologize to both of them as well for being of little help on that particular evening.

At the end of my three minutes at the podium I had intended to make what I felt were some important and honest comments. Although I sharply disagree with the logic articulated that evening in favor of the application's approval, I would like to deliver my comments to you now. They still hold true. And they apply to the *entire* planning board, and certainly to you as Chair.

Your process was the most democratic thing I've seen in a long, time. That's democratic with a small "d." Right at the start we heard about your Code of Ethics. Everything was transparent, and

participation by local folks was amazing. Everyone who wanted to do so was allowed to supply information, and felt very welcomed to approach the podium. All planning board members were paying attention, and I strongly believe all members researched and deliberated with integrity.

In the democratic process with a small "d," everyone gets to say their piece and then a decision is made. Although your decision did not go the way I had hoped, I certainly respect it. Because what you folks put together was an inclusive *model exercise* in local democracy. You were the *only* regulatory agency to welcome and seriously consider citizen input, and that is to your credit.

I wish you and each planning board member the best, and I hope you all enjoy what remains of this fabulous summer weather.

Sincerely,

John Schafer
Hills Beach, Biddeford, Maine

Whitten, Nan

From: Fishing Woes <fishingwoes@gmail.com>
Sent: Wednesday, July 9, 2025 4:34 PM
To: Whitten, Nan
Cc: Lewis, Kayla; Deschambault, Susan; Patoine, Larry; Angers, Roch; Beaudette, Stephen; Dubois, Matthew; Plotkin, Alexa; Galbraith, David; Center, Harry; randyseaver01 @gmail.com; dinamendros@gmail.com; srichelieu@metln.org; newsdesk@sacobaynews.com; Iriqat, Adi
Subject: Re: Repeating official request to Biddeford City Planner

Caution: This is an external email. Please take care when clicking links or opening attachments. When in doubt, contact the IT Department

The mooring owners are anything but anonymous. We have been very public. We are:

Tom Hatch, mooring #12, Bob Brackett, mooring #150, Gregg McPherson, mooring #138, William Mitchell, mooring #48, Captain Shawn Tibbetts, mooring #126, Mike Ramunno, mooring # 46, and Steve Goebeil, mooring number 248.

We are unified, and we're not moving. We submitted a signed Letter of Notice to the Planning Board on May 21, 2025, and we sent a letter to UNE president James Herbert on July 3, 2025.

The site on the Saco River that the Planning Board is looking at this evening is unavailable to UNE. That's a fact.

On Tue, Jul 8, 2025 at 1:43 PM Whitten, Nan <Nan.Whitten@biddefordmaine.org> wrote:

> ***Good Afternoon***
>
> ***The purpose of the site walk is a workshop for the Planning Board; it is not a forum to make decisions or announcements as such. If he feels it is appropriate, the City Planner will make the announcements you request at the Planning Board meeting of July 16th.***
>
> ***If you would like to identify yourself, we would be happy to post the letter with the agenda packet but where it is anonymous, it will be kept in the file.***

Thank you for your input, we will pass it onto the applicant and keep it on file.

Nan Whitten

City of Biddeford

Office Manager

Planning & Development

207-284-9115

From: Fishing Woes <fishingwoes@gmail.com>
Sent: Tuesday, July 8, 2025 1:05 PM
To: Lewis, Kayla <kayla.lewis@biddefordmaine.org>; Deschambault, Susan <Susan.Deschambault@biddefordmaine.org>; Patoine, Larry <Larry.Patoine@biddefordmaine.org>; Angers, Roch <Roch.Angers@biddefordmaine.org>; Beaudette, Stephen <Stephen.Beaudette@biddefordmaine.org>; Dubois, Matthew <Matthew.Dubois@biddefordmaine.org>; Plotkin, Alexa <Alexa.Plotkin@biddefordmaine.org>; Galbraith, David <David.Galbraith@biddefordmaine.org>; Whitten, Nan <Nan.Whitten@Biddefordmaine.org>
Cc: randyseaver01@gmail.com; dinamendros@gmail.com; srichelieu@metln.org; newsdesk@sacobaynews.com
Subject: Repeating official request to Biddeford City Planner

Caution: This is an external email. Please take care when clicking links or opening attachments. When in doubt, contact the IT Department

Since so much time and effort has been invested to arrange tomorrow's site walk at UNE, it is crucially important that Biddeford's city planner verbally inform everyone who makes the effort to attend, at the start of the meeting, that the viewing party will be looking out on a site on the river that is unavailable to UNE for building a pier. Thank you in advance for being fully transparent about this.

FACTS:

1. UNE has proposed a pier in a location that is unavailable to them. Other mariners are already legally moored in that spot, and have been for many years.

2. The current mooring holders categorically reject UNE's offer to pay for our relocation.

SUPPORTING INFORMATION IN DOCUMENTS:

1. Al Thibeault, memo June 11, 2025: "The Biddeford Mooring Permit Application clearly states 'The location is subject to change at any time **at the discretion of Harbor Master** or Deputy…'"

2. Biddeford Harbormaster, email to mooring holders, April 12, 2025: "Several mooring owners in the lower part of the Saco River have recently expressed concerns to me about the imminent removal or relocation of their mooring. You may have a similar concern. I am writing to let you know that, as Harbormaster, I have no plans to remove or relocate any existing mooring."

3. Mooring owners, letter to UNE president James Herbert, July 7, 2025: "We are the local mooring owners. We will all be affected by your proposed pier location, and two of us sit directly *on* your coveted location. *None of us are moving*."

Whitten, Nan

From: Pier Review <unepierreview@yahoo.com>
Sent: Thursday, July 10, 2025 9:59 AM
To: Randy Seaver; srichelieu@metln.org; newsdesk@sacobaynews.com; dinamendros@gmail.com; wmtw@wmtw.com; tvmail@wgme.com; desk@newscentermaine.com; sean.a.murphy@charter.com
Subject: Media update after yesterday's UNE pier site walk
Attachments: Put Pier Here Composite.jpg

Caution: This is an external email. Please take care when clicking links or opening attachments. When in doubt, contact the IT Department

- Regulatory review of UNE's proposed marine sciences research pier on the lower Saco River continued yesterday, Wednesday, July 9, 2025. The site walk began at 5:00 p.m. and was a repeat of the June 9 site walk, which Biddeford's city planner had scheduled despite knowing that three planning board members could not attend.
- The planner did not attend the site walk last night. His absence came after Tuesday's press announcement revealing his hasty attempt last month to persuade the planning board that some of some sort of official agreement was in place between the Biddeford Fire Department and UNE. (No such agreement exists.)
- Photo attached. In advance of the site walk, residents erected a sign on public land at the low tide mark. Text on the sign read, "PUT THE PIER HERE, LESS IMPACT ON THE MOORING FIELD AND NAVIGATION."
- The sign was in the suggested alternative location that Biddeford's harbormaster recommends for the pier. (The harbormaster is under orders from the City to remain silent about UNE's application.)
- The sign is in the general location UNE's attorney Ron Schneider claimed has no deep water, and therefore a pier there "would sit in water too shallow to use." Schneider made his false declaration while threatening to sue the City of Biddeford.
- During the site walk last night, Schneider ordered the former chairman of Biddeford's Harbor Commission to tell whoever put the sign up to remove it.
- The sign, however, was not on UNE's property.
- The sign was in the general location GEI Consultants described in a memo to UNE that directly contradicts Schneider. GEI is UNE's hired consultant. On November 28, 2023 they wrote, "The suggested alternative location does have greater depth at the main berth, approximately 11 to 12 feet at MLLW."
- Last week the city planner instructed the planning board that, in reaching a decision, it cannot consider factors like water depth, current, tides, other moorings, ice flow, etc.
- Even at this late stage of regulatory review, no certified Harbormaster has reviewed or approved UNE's application.

The Biddeford Planning Board meets next Wednesday, July 16, to continue its deliberations on UNE's application. The meeting will be at 6:00 p.m. at Biddeford City Hall.

Whitten, Nan

From:	Pier Review <unepierreview@yahoo.com>
Sent:	Tuesday, July 8, 2025 3:17 PM
To:	Randy Seaver; wmtw@wmtw.com; tvmail@wgme.com; desk@newscentermaine.com
Subject:	In UNE pier review, Biddeford planner puts heavy thumb on scale
Attachments:	galbraith to chief.pdf

Caution: This is an external email. Please take care when clicking links or opening attachments. When in doubt, contact the IT Department

In UNE pier review, Biddeford planner puts heavy thumb on scale

MEDIA CONTACT: Kyle Noble, UNEPierReview@yahoo.com, 207-468-5296

(Biddeford, Maine) After the Biddeford City Council and Planning Board publicly scolded the city's planner for repeatedly pressuring them to approve development projects without full documentation, it has come to light that the planner personally tried to pave the way for approval of an application that the University of New England (UNE) has in front of the planning board.

(VIDEO, planner reprimanded by Biddeford Planning Board and City Council: https://youtu.be/-Kfno9gmvAY)

Galbraith discovered that a key agreement between the Biddeford Fire Department and UNE doesn't exist, so he tried to manufacture one.

On May 28, a Hills Beach resident had written, "The Board should request any evidence of a signed agreement between the City and UNE about hosting a fireboat. If one doesn't exist, the need isn't documented, and the pier is over-designed and too large by definition." On June 9, a planning board member asked Galbraith for a copy of the agreement. The next day Galbraith wrote to Biddeford's fire chief, "I would love to provide a letter to the Board" about an agreement between the fire department and UNE. (Email excerpts attached.)

"It is not the planner's job to write UNE's application for them," said Kyle Noble, a Biddeford resident and former city councilor. "He is way out of line. Begging the fire chief to manufacture a document is an insult to the intelligence and integrity of this board."

Coincidentally, discovery of the planner's appeal to the fire chief came after he wrote to the city attorney last week trying to limit the scope of planning board review. On Thursday he wrote that for UNE's proposed dock, a very large structure that would dominate the lower Saco River, the planning board must strictly avoid looking at tides, river depth, currents, silt build-up, and many other issues that typically affect any marine structure. "The Board may only base their decision on the specific criteria listed in the Site Plan and Shoreland Zoning laws as they specifically relate to Piers & Docks," he wrote.

Noble said area residents have faith in Biddeford's planning board members, despite efforts by other

government authorities to circumvent normal regulatory review and ignore public input.

"The general feeling is that the planning board members will successfully ward off all attempts by UNE and city staff to unfairly manipulate the process, as they have been trying to do all along. This board is capable of resisting maneuvers to short-circuit proper procedures," he said.

---30---

Whitten, Nan

From: Fishing Woes <fishingwoes@gmail.com>
Sent: Saturday, July 5, 2025 10:03 AM
To: Galbraith, David
Cc: randyseaver01@gmail.com; dinamendros@gmail.com; desk@newscentermaine.com; Plotkin, Alexa; Patoine, Larry; Dubois, Matthew; Lewis, Kayla; Beaudette, Stephen; susan.deschambault@gmail.com; Deschambault, Susan
Subject: Official request to Biddeford's City Planner

Caution: This is an external email. Please take care when clicking links or opening attachments. When in doubt, contact the IT Department

Dear Mr. Galbraith,

This is an official request to you in your role as Biddeford's City Planner, a self-professed champion for openness and transparency in the planning process. Please inform the Planning Board, both *before* the July 9 site walk at UNE and *before* the July 16 planning board meeting, of the following information. Please do so verbally, so that every member of the public who attends those events can plainly hear you directly inform the Board of these facts.

1. UNE has proposed a pier in a location that is unavailable to them. Other mariners are already legally moored in that spot, and have been for many years.
2. The current mooring holders categorically reject UNE's offer to pay for our relocation. Period. They need to stop mentioning the offer --- it is irrelevant, because it has been emphatically and repeatedly refused. We aren't moving.
3. In light of the previous two facts, mooring holders sent a letter to university president James Herbert asking him to publicly reveal his plan to forcibly remove current mooring holders from their legally-held spots on the river.
4. The university has been aware of Facts #1 and #2 since May 14, 2025. Therefore, mooring holders asked Mr. Herbert to make the university's mooring-extermination plan available by the close of business Tuesday, July 15, a day before the next Planning Board meeting.

We very much appreciate your public statements supporting openness and transparency at the May 21 and June 18 Planning Board meetings. Thank you in advance for honoring this request.

Whitten, Nan

From: Paul Lamontagne <paullamontagne.maine@gmail.com>
Sent: Saturday, July 5, 2025 7:38 PM
To: Planning Board
Subject: This UNE pier decision seems pretty simple

Caution: This is an external email. Please take care when clicking links or opening attachments. When in doubt, contact the IT Department

Dear Planning Board,

Although I now live in western Maine near the NH border, my grandparents allowed me to spend many, many hours with them on the Saco River when I was growing up. They lived in Biddeford all their lives. These days I will still come over to Biddeford fairly regularly with my own boat, putting in at Marblehead and enjoying the day, as I did on the 4th of July this year.

A fellow boater I've known for many years told me about the UNE thing yesterday, so this morning I went to the Biddeford website, downloaded all the documents, and watched all the videos. Here's my point of view:

--- The chairperson of the planning board made an excellent point during the May 21st meeting. You are guided by a code of ethics to make sure every claim that UNE makes is documented.
--- It's pretty clear that the guys who have moorings where UNE wants to build are not moving, so I don't see how you can approve UNE's application. Other people are already there.
--- The pier has not been reviewed or approved by a real harbor master.
--- The engineering outfit that UNE hired to sell their pier to you wrote in a memo, contained in the materials that you have reviewed, that the place Biddeford's harbor master suggested has deeper water than the location UNE wants. I mean...c'mon! Why can't the university use common sense?
--- I read your code of ethics very carefully. You are each required to obtain what information and knowledge is necessary to make the wisest decision possible. It seems to me there's a better location than what UNE proposed, and the planning board has no choice but to investigate that issue.

To conclude, UNE's own consultant says there's deeper water where the harbormaster wanted the pier to go all along, making it a better place for a 60-foot research vessel. Also, putting it in the deeper water would avoid the entire problem of current mooring owners, who have made it clear that they're not moving.

I don't see that you have any choice but to deny this application, and invite UNE to submit another one that is thought out in a much better way.

That's my opinion, and thanks for listening.

Paul

Whitten, Nan

From: Hills Beach John <hillsbeachjohn@yahoo.com>
Sent: Monday, July 7, 2025 9:49 AM
To: Center, Harry; attorney.general@maine.gov
Cc: Lewis, Kayla; Plotkin, Alexa; Beaudette, Stephen; Dubois, Matthew; Angers, Roch; Patoine, Larry; susan.deschambault@biddefordmaine.org; Planning Board; Whitten, Nan; Grohman, Martin; Phinney, Brian; Randy Seaver; newsdesk@sacobaynews.com; Dina Mendros; srichelieu@metln.org; Galbraith, David
Subject: Biddeford people trust Planning Board's ethics

Caution: This is an external email. Please take care when clicking links or opening attachments. When in doubt, contact the IT Department

Hi Harry,

The City Planner wrote, "The Board may only base their decision on the specific criteria listed in the Site Plan and Shoreland Zoning laws as they specifically relate to Piers & Docks." You wrote, "I concur with David's position."

After that explanation circulated in the community, I got a ton of feedback. I regret to say some of it was angry feedback. If I had to paraphrase, I would say community sentiment is that the Planner's analysis is an extremely narrow interpretation, concocted to encourage the Planning Board to approve UNE's application. It was pointed out to me that, better than a single opinion, a controlling and legally binding document exists, "Biddeford Planning Board RULES OF PROCEDURE AND CODE OF ETHICS." Excerpts:

- "The Planning Board's purpose is to implement the Comprehensive Plan and to foster coordinated and harmonious development…that will…best and most efficiently promote the public health, safety, and general welfare."

- "Appointment to the Planning Board…represents a public trust…"

- "Board members are therefore expected to keep consideration of the general public interest foremost in their deliberations."

- "Board members are also expected to retain an open mind to all viewpoints."

- "…the Board should attempt to draw out and clarify the positions of people on all sides of the issue…"

- "Each Planning Board member has the responsibility to acquire whatever information and knowledge is necessary to fully understand and make wise decisions and recommendations in the interest of the City."

- "Members are encouraged to expand their knowledge and understanding of planning issues…"

- "...members have the responsibility to insist that they are provided...information of sufficient scope and depth to allow them to fully understand the issues before the Board and the alternative actions available to the Board."

- "If the application....and other documents...are insufficient to enable a Board member to fully understand the issues immediately before the Board, that Board member has the responsibility to ask questions...to acquire the necessary understanding."

- The Planning Board has the responsibility to ensure that the decision-making process it applies to any issue before it is not only rational, but is also perceived as rational."

- "Furthermore...findings should be supported by information available to the Board, whether it is information...contained in...(a) document submitted to the Board, or included in testimony presented before the Board..."

- "The Board should thus explicitly evaluate all facts, alternatives, means, and consequences relevant to its decisions."

I have been asked by my neighbors to point out that members of the Planning Board took an oath not to faithfully adhere to the opinion of the City Planner, but to faithfully adhere to the Rules of Procedure and Code of Ethics.

The Planner is trying to persuade the Board *not* to look at important information. Whereas the Code of Ethics specifically instructs each Board member to "evaluate all facts, alternatives, means, and consequences." Further, "Each Planning Board member has the responsibility to acquire whatever information and knowledge is necessary to fully understand and make wise decisions and recommendations in the interest of the City."

We suggest that the Planner's advice to the Board directly contradicts the Rules of Procedure and Code of Ethics. This is alarming, given the fact that the Planning Board has been left completely unadvised by the Harbormaster, the Assistant Harbormaster and the Biddeford Harbor Commission. And as the Maine Harbor Masters Association has pointed out, no certified Harbormaster has reviewed or approved UNE's application.

With all that said, despite the unprecedented and highly irregular circumstances of this situation, I think Biddeford citizens are very confident that each member of the Planning Board will adhere to the Rules of Procedure and the Code of Ethics. In our opinion, that includes the certainty that Board members will "acquire the necessary understanding" of water depth, current, wind, silt build-up, extreme weather events, extreme high tides, extreme low tides, boat traffic on the river, moorings in the immediate area, etc.

As always, Harry, thank you for your professional and courteous consideration of information that this community submits to you.

Respectfully,

JS

Whitten, Nan

From: Hills Beach John <hillsbeachjohn@yahoo.com>
Sent: Tuesday, July 8, 2025 10:41 AM
To: Lewis, Kayla; Patoine, Larry; Dubois, Matthew; Beaudette, Stephen; Whitten, Nan; Galbraith, David; Deschambault, Susan; Angers, Roch
Subject: For the record, UNE denied Mr. Patoine's request

Caution: This is an external email. Please take care when clicking links or opening attachments. When in doubt, contact the IT Department

During the May 21 Planning Board meeting, member Larry Patoine appropriately asked that the Board be supplied with a copy of the application that UNE filed with the National Institute of Standards & Technology (NIST.)

Buried in the almost one thousand pages of materials that the Planning Board has made available online is notification to the Board and Mr. Patoine that UNE has refused Mr. Patoine's request. That is made clear at the bottom of page 5 in a memo written by Alan Thibeault and submitted to the City on June 11, 2025.

Sincerely,

JS

Whitten, Nan

From: Hills Beach John <hillsbeachjohn@yahoo.com>
Sent: Monday, June 30, 2025 10:26 AM
To: Center, Harry; attorney.general@maine.gov
Cc: Galbraith, David; Planning Board; Whitten, Nan; Phinney, Brian; Grohman, Martin
Subject: A request for legal analysis: city's regulatory process

Caution: This is an external email. Please take care when clicking links or opening attachments. When in doubt, contact the IT Department

Good morning, Harry, I hope you had a great weekend.

Al Thibeault said during the site walk on June 9 that he knows nothing about boats and nothing about the river. The Maine Harbor Masters Association has confirmed that Wayne Duffett of TEC Associates is not a Harbormaster. Just like Al Thibeault, he doesn't know the river --- no Harbormaster has approved UNE's application. Biddeford went totally unrepresented at the Saco River Corridor Commission --- our delegate abstained completely from all discussion, did not raise concerns, and did not vote. The DEP Commissioner denied a request for a public hearing. The U.S. Army Corps confirmed that all public input submitted until they made their decision was tossed into the garbage can and not considered.

Further, the Maine Harbor Masters wrote to Jim Bennett on June 4, 2024, "...we recommend that you work within the review hierarchy laid out in your harbor ordinance." But as he was busy ruining the city's finances, Bennett also made sure that the Harbormaster could not review the UNE proposal. He made sure the Assistant Harbormaster could not review the UNE proposal. As a result, he in effect liquidated the Harbor Commission, which has ceased to function or even meet. It never reviewed the UNE proposal.

Clearly UNE is fast-tracked on their way to a clean sweep. Their threat to sue the City if their exact location is not approved has been extremely effective. The largest structure ever built on the lower Saco River, in the busiest part of the river, subject to very dynamic tidal and weather forces, is going to slip by with absolutely nobody in authority looking at those dynamic forces to which the pier and a 60-foot vessel will be subjected. That's like Big Pharma rushing a new opioid onto the market without the FDA looking at potential side effects.

Many suspect Bennett intended this specific outcome all along --- easy approval without meaningful review. Certainly UNE is delighted with how far they have come without anybody in authority looking at actual river conditions.

As I have written before, I have the highest respect for your integrity and legal analysis. And therefore I am quite sure you were 100% accurate when you wrote the following:

"At this time, I see no basis for the City's Planning Board to deny this permit based upon the water depth at the location, the current, or any of the accusations made at the last meeting - as there are no standards within the City's Code of Ordinances/Shoreland Zoning Ordinance that would justify or support the denial of a pier based on such claims by the opponents."

I understand and respect your strict interpretation of the Code. For the benefit of local residents and of Planning Board members, I'd like to ask one question. Do the City's Code of Ordinances/Shore Ordinance in any way *prohibit* members of the Planning Board from asking questions about water depth, current, wind, silt build-up, extreme weather events, extreme high tides, extreme low tides, boat traffic on the river, moorings in the immediate area, etc.?

Thank you, Harry. I understand that the complete disintegration of the normal regulatory process has put you into a very difficult position, unfairly so. We are grateful for your continued service to the people of Biddeford.

Whitten, Nan

From: Hills Beach John <hillsbeachjohn@yahoo.com>
Sent: Monday, June 23, 2025 8:47 AM
To: Randy Seaver; sean.a.murphy@charter.com; desk@newscentermaine.com; wmtw@wmtw.com; tvmail@wgme.com; dinamendros@gmail.com; newsdesk@sacobaynews.com
Cc: Emily.Horton@mail.house.gov; pam_buck@collins.senate.gov; Sarah_Stanley@king.senate.gov
Subject: Collins, King, Pingree staffers lock arms, advance UNE pier secrecy
Attachments: 25.06.23 communications HISTORY.pdf

Caution: This is an external email. Please take care when clicking links or opening attachments. When in doubt, contact the IT Department

Collins, King, Pingree staffers lock arms, advance UNE pier secrecy

PRESS CONTACT: John Schafer, HillsBeachJohn@yahoo.com, 207-294-2410

(Biddeford, Maine) It appears Saco and Biddeford residents will not get information requested from Maine's federal delegation about components of a federal grant awarded to the University of New England (UNE) by the National Institute of Standards & Technology (NIST).

Several months ago a community organizer asked if the $3.5 million grant to help build a new marine research pier on the Saco River has a portion of its funds set aside for "administration" of the grant and if it does, what percentage of the funds UNE would pocket for that function. Local field representatives for U.S. Senator Susan Collins, U.S. Senator Angus King and U.S. Representative Chellie Pingree won't answer the two questions.

"Today I'm distributing the email history. It shows constituents have been polite in requesting the information, and it seems clear that the failure to even reply is intentional," said John Schafer, former Chair of the Biddeford Harbor Commission.

(One document attached: 1) email messages to Collins, King, & Pingree staffers, followed by 2) Schafer dialogue with Collins' staff about NIST grant.)

Schafer said he's not surprised by the stonewalling, because it follows a successful effort earlier this year by Collins' office to dodge a request for contact info at NIST so that he could file a FOIA request and obtain a copy of the application UNE filed to secure the grant.

"I made several requests, they tried several times to talk to me on the phone instead of just giving me the information, and ultimately never provided the contact information after promising it to send it. They also denied ever having been in contact with NIST via email, which I found hard to believe. After all, Senator Collins sent out a press release taking full credit for securing the grant for the university," Schafer said.

Last Wednesday the Biddeford Planning Board tabled UNE's effort to secure approval for the proposes research pier.

---30---

Pages 2 - 3:

Four group emails (all unanswered) to staffers for U.S. Senator Susan Collins, U.S. Senator Angus King, U.S. Representative Chellie Pingree, April – June 2025

Page 4 –9:

Record of dialogue between former Chair of Biddeford Harbor Commission and office of U.S. Senator Susan Collins, January – February 2025

John Schafer, HillsBeachJohn@yahoo.co,. 207-294-2410

On Sunday, April 6, 2025 at 03:58:33 PM EDT, Hills Beach John <hillsbeachjohn@yahoo.com> wrote:

Good afternoon.

This is a question for Senator Collins and/or Senator King and/or Representative Pingree, posed via their esteemed local field representatives. Thank you in advance for researching and relaying the answer back to me. If you would, please Reply All, as I have copied Biddeford's Mayor, City Council, and City Manager to this email inquiry.

My question concerns the $3.5 million awarded to UNE by the National Institute of Science and Technology (https://www.highergov.com/grant/60NANB23D148/). This may be completely wrong, but I have been told that the grant contains a 10%, 15% or 20% outlay for "administration." Does the award contain funding for administration of the grant (or a similar purpose), and if it does, what percentage of the $3.5 million is dedicated to that purpose?

Thank you very much for your time and constituent service.

JS

On Friday, April 11, 2025 at 04:01:16 PM EDT, Hills Beach John <hillsbeachjohn@yahoo.com> wrote:

The work week draws to a close. I'll repeat these two very uncomplicated but unanswered questions in regard to Project Grant 60NANB23D148:

1. Does the award contain funding for administration of the grant (or a similar purpose)?
2. if it does, what percentage of the $3.5 million is dedicated to that purpose?

Thank you.

JS

On Tuesday, May 13, 2025 at 06:43:07 PM EDT, Hills Beach John <hillsbeachjohn@yahoo.com> wrote:

We're closing in on 6 weeks since I asked two questions about Project Grant 60NANB23D148. None of you has replied, or has acknowledged having been asked:

1. Does the award contain funding for administration of the grant (or a similar purpose)?
2. If it does, what percentage of the $3.5 million is dedicated to that purpose?

From: Hills Beach John <hillsbeachjohn@yahoo.com>
To: pam_buck@collins.senate.gov <pam_buck@collins.senate.gov>; Sarah_Stanley@king.senate.gov <sarah_stanley@king.senate.gov>; Emily.Horton@mail.house.gov <emily.horton@mail.house.gov>
Sent: Monday, June 16, 2025 at 01:52:12 PM EDT
Subject: Re: inquiry from a constituent

Good afternoon, hope everyone had an enjoyable weekend.

I *always* try to work within proper chain of command. That's why I wrote my original message 70 days ago to the local field representatives for Senator Collins, Senator King, and Representative Pingree, and then politely followed up.

All correspondence about the 2 simple UNE grant questions I posed has gone unacknowledged by all three offices.

Before I elevate this constituent service issue directly to all three members of the delegation, I figured I would write one last time. I'll hold off on taking additional steps for the duration of this work week. Thank you very much.

JS

From: Hills Beach John <hillsbeachjohn@yahoo.com>
To: pam_buck@collins.senate.gov <pam_buck@collins.senate.gov>
Sent: Tuesday, January 28, 2025 at 07:37:27 PM EST
Subject: Need contact info --- thank you!

I know that the Senator's office was instrumental in securing a $3,465,000 grant for UNE from the National Institute of Standards and Technology, and that the grant was awarded in 2023. To make that happen I am sure that ample correspondence with NIST staff was required. Could I please have a list of all NIST staff who worked on processing and approving UNE's application, along with their email addresses. Please send the information to John Schafer: hillsbeachjohn@yahoo.com. Thank you very much.

John Schafer
Hills Beach, Biddeford

----- Forwarded Message -----
From: Buck, Pam (Collins) <pam_buck@collins.senate.gov>
To: Hills Beach John <hillsbeachjohn@yahoo.com>
Sent: Wednesday, January 29, 2025 at 03:10:12 PM EST
Subject: RE: Need contact info --- thank you!

Dear John,

Letting you know I received your request and I will respond promptly.

Respectfully, Pam

Pamela D. Buck
State Office Representative
U.S. Senator Susan Collins
160 Main Street
Biddeford, ME 04005
207-283-1101 Office
202-834-2907 Cell/Text
Pam_Buck@collins.senate.gov
Sign up for Senator Collins' Weekly Newsletter here.

Jan 29 at 4:52 PM

Dear Mr. Schafer,

Thank you for your email concerning CDS applications submitted to Senator Collins' office and/or website. All of the applications for Congressionally Directed Spending(CDS) are confidential to our offices. All CDS applications are reviewed. Concerning application project information related to permitting processes, this is the responsibility of the applicant to complete and have

approved before the project can move forward. Additionally, there is not a congressional "shovel ready" requirement. In fact, some projects are in their planning stages.

If you are interested in learning more about these permitting requirements, I suggest you reach out to the CDS's applicant, town officials, and/or Maine DEP to inquire about these permitting requirements. Concerning your request of National Institute of Standards and Technology staff contacts, this is not information we have access to, even if we did it is again confidential.

Respectfully, Pam

Thu, Jan 30 at 10:37 AM

Dear Ms. Buck,

Thank you for answering so promptly. Excellent constituent service!

I am perplexed that in your reply you made the specific point that a CDS application is confidential to your office, because I did not ask you for a copy of the application. I also did not mention permitting, whether or not there is a "shovel ready" requirement, nor did I ask anything about projects that are in the planning stages. I didn't ask for any of that, so I don't understand why you volunteered this information to me.

My request was extremely narrow. I asked for appropriate contact information at a federal agency, a division of the U.S. Department of Commerce. That's all.

Back to my narrow request, I originally had no intent of making public my correspondence with the Senator's office, but should that need to change, I want to make sure I understand precisely what you mean by your concluding statements.

1. You wrote, "even if we did (have the information) it is again confidential." Am I correct in understanding that according to Sen. Collins office she cannot provide, to a constituent, contact information at a federal agency about an initiative on which that person has been working?
2. Also, by writing that "this is not information we have access to," is Sen. Collins effectively claiming that there have been no email exchanges between her office and NIST staff in regard to the UNE application?

I look forward to your reply. If my two questions require consultation with legal counsel and therefore a reply might take a little time, I completely understand. Again, thank you for the very quick response to my original email, I appreciate the professionalism, and I hope you have a great day!

With respect,

John Schafer

Thu, Jan 30 at 10:42 AM

Dear Mr. Schafer,

I will inquire on your two questions presented being:

1. You wrote, "even if we did (have the information) it is again confidential." Am I correct in understanding that according to Sen. Collins office she cannot provide, to a constituent, contact information at a federal agency about an initiative on which that person has been working?
2. Also, by writing that "this is not information we have access to," is Sen. Collins effectively claiming that there have been no email exchanges between her office and NIST staff in regard to the UNE application?

Respectfully, Pam

Thu, Jan 30 at 11:43 AM

Thank you very much.

JS

Fri, Jan 31 at 10:40 AM

Hi Pam, I'd like to revise and narrow my original request. I don't need a list of names of NIST staff who worked on the UNE application. I just need contact information for a "project leader" or something like that. Just one person who was involved and is familiar with the application. Also, I repeat that I am not asking the Senator to provide me with a copy of the application.

Thanks very much, and have a great weekend.

John

Fri, Jan 31 at 1:55 PM

Thank you John for your revised question. I will follow through and respond back to you.

And hope you have a great weekend as well!

Respectfully, Pam

Thu, Feb 6 at 2:54 PM

Dear John,

Your request was submitted last week and our team has reached out to NIST to identify the best point of contact.

Also, I would like the opportunity to explain the CDS process on a larger scale for more understandings.

Appreciate your time, Pam

Fri, Feb 7 at 10:26 AM

Hi Pam,

You are free to call or send me whatever information that explains the CDS process on a larger scale, and I will carefully consider any information that you think is important.

However, as mentioned before I note that the assistance I am seeking from the Senator is not understanding the CDS process, getting a copy of UNE's application from your office, or other specific aspects of the application. My request is extremely narrow. I am only looking for a name and email address for an NIST staffer who has ample familiarity with the application process in which UNE submitted documents to that federal agency. That process culminated in the award of Project Grant 60NANB23D148.

As I have sought this email address, you have written that the Senator did not have access to that information, and that your team is now reaching out to NIST to identify the best point of contact. I therefore conclude that there have been no previous email communications between the Senator's office and NIST connected to UNE's application for federal funds --- otherwise you would already have that email address. If you could confirm for me that the Senator's office has not previously been in touch with NIST about this matter, thank you very much.

Have a great weekend.

Sincerely,

John Schafer

February 7, 2025 Voicemail

Hey John, this is Pam Buck calling from Senator Collins' office. I just wanted to try to reach out to you before this week ended. It's 4:49. I'm trying to get a call in before 5. Just wanted to let you know, I was hoping to speak to you in person because sometimes emails can get lost in

explanations. So, yes, I wanted to save you a question. Did Senator Collins' office or did her staff actually reach out to the NIST for any information?

And the answer is current staff here, I mean myself, the legislative staff that I've been working with, we have not reached out to NIST other than recently to get a point of contact for you which they have not we we put the request in and they haven't sent anything back so we have not you're correct in stating that um that we did not access any information from nist and that is honestly correct so and the other thing is i wanted to know i know um you mentioned that you don't want any information about the cds process but um i'm willing to explain it to you, take maybe all of 10 minutes, and also my legislative staff in DC is willing to be on the call as well in case you have

Any more detailed questions about the process, and we'll probably set that up another time. So John, have a great weekend. Pam Buck, Senator Collins' office here in beautiful downtown Biddeford, and yes, you're correct. Our office has not had any, our current office staff here working with the program and CDS has not had any communications, emails, or phone communication, except for just recently when we reached out for a point of contact on your behalf. Pam Buck, Senator Collins' office here in beautiful downtown Biddeford, and yes, you're correct. Our office has not had any, our current office staff here working with the program and CDS has not had any communications, emails, or phone communication, except for just recently when we reached out for a point of contact on your behalf. So, thank you. Have a great day.

February 11, 2025 Voicemail

Hi, John, this is Pam Buck from Senator Collins' office. Ah, it's quite difficult, possibly, if you tried to call back. We're still getting a lot of calls right now.

Um…wanted to give you a call concerning the questions that we've been going back and forth for the CDS and, um, for UNE, and just wanted to make sure you got my comment. If you can call me, it'd be wonderful. So it's 207-283-1101, and we're here, um, here till 5 o'clock every night.

So I'll try to call you again. Thank you. Hope you're having a great day.

Take care. Bye.

Mon, February 24 at 3:00 PM

Dear Pam,

I'm writing to let you know that I've decided to conclude this constituent's attempt to get information from Senator Collins.

I made my original and very simple request on January 28. On January 30, I wrote that I would understand if your office felt that the request needed legal review before replying. On February 6, you wrote that your team had reached out to a federal agency (NIST) to identify the best point of contact. It is now February 24, and I still don't have an email address. I suspect that's not an

accident. I conclude that senior staff or even the Senator herself has instructed you not to give me the information, and/or to do everything possible to deter me from further pursuit.

My request was innocuous and simple, just an email address. Specifically, an email address for a person who is familiar with the application that UNE filed with NIST, a division of the U.S. Department of Commerce. The application was for a pier that "will expand UNE's capabilities to conduct ocean-going research and facilitate scientific and practical exchanges with local, regional, and national marine researchers and industry partners." Obviously national security has nothing to do with this application, which resulted in the award of $3.5 million dollars in taxpayer money to UNE.

You told me that your office did not have "access" to this contact information for a federal employee. Also, in a February 7 voicemail, you said the Senator's office "has not had any communications, emails, or phone communication, except for just recently when we reached out for a point of contact on your behalf." That had me scratching my head because in July of 2022 Senator Collins issued a press release, "$3.5 Million for UNE Coastal Research Secured by Senator Collins in Funding Bill in First Key Step." I don't see how she could secure the funding while never having been in email contact with NIST about UNE's pier.

It has been 27 days since I first contacted you. Senator Collins is the Chair of the Appropriations Committee, which approves all NIST funding. She has enormous influence with every federal agency. Surely anybody from her office could obtain a name and address of an NIST staffer, in two minutes or less, with a phone call. Assuming the Senator is routinely briefed by staff, her intent to block my request is clear.

For your files and for the press folks copied to this message, I am attaching a record of all voicemails and emails about my request since I first reached out to you on January 28. I am confident in my conclusion that as a staffer you have been put in a very bad spot personally, tasked with making sure I don't get the information. Despite that, please know that I have no quarrel with you. You have been nothing but courteous and professional with me. Thank you for that, and I hope I have been just as courteous and respectful with you.

Sincerely,

John Schafer

Dear Biddeford Planning Board,

I wrote to you recently, and to re-cap very briefly, I spent 46 years in the commercial fishing industry. I was appointed to Saco's very first Coastal Waters Commission, was executive director of the local Chamber of Commerce for several years, served as Director of Transportation for BSOOB Transit, and founded the Northwest Atlantic Marine organization (NAMA), an organization that emphasized *collaboration* and *rational discussion* between commercial fishermen and federal regulators. Hardly an easy task, I assure you!

I have a positive relationship with UNE and its president, and always look forward to teaching my seminars with students who are in the Marine Science Program. My relationship with UNE spans over 15 years. I agree 100% that UNE needs a new pier for its ambitious and critical research activities.

I attended the May 21 Planning Board meeting, and the Board left no doubt that it will do a site survey. Mr. Dubois correctly surmised that this should happen at low tide, and Mr. Patoine asked that a system for easily determining river depth be in place. Since getting the Board onto the river is now a certainty, I would like to volunteer my services to help the Planning Board achieve this mission. And of course in the spirit of transparency and openness, which as a common theme during the planning board meeting, entrusting me as a third party, we can assure you these important criteria will be addressed.

I've been brainstorming just a bit, and here are some initial thoughts:

- I assume UNE will want at least two or three people on board. The City will want Board members, the Planner, and probably a reporter or two to act as the eyes and ears for the public. I anticipate a handful of others as well, so my guess is between 12 and 15 people in total.
- Most likely you'll need three boats, and it's less likely but possible you'll need four.
- At least one of the boats should have a depth finder. Two would be better. I can help round up the boats.
- You'll want at least one independent person who knows the river extremely well, and who can serve as a captain for the expedition. That person would coordinate navigation of the boats, and serve as an authority figure for any questions that the Board, UNE or the press may have about how the river flows. That person should anticipate coordinating the outing with the Biddeford Planning Department. I'd be happy to assist.
- Off the top of my head, I think Saco's present Harbormaster would be a good candidate. I am unaware of any public statements he has made about UNE's application. Together, he and I can provide the necessary expertise and knowledge to accomplish this important sight visit.

- Since the main question at hand is depth at two locations on the river, the captain of the expedition will be able to figure out the best way to safely acquire the data that the site visit is intended to collect.
- A good launching point for the site visit would be the Camp Ellis pier. Mr. Angers mentioned that he would like to see the site from the Saco side as well, so his request would be satisfied. I would be happy to work with Saco City Hall to see if free parking passes could be arranged for everyone who will be on the boats that day.

That's just a brief sketch, but I hope it illustrates the type of planning that's going to be necessary. Several months ago I wrote to James Herbert, president of UNE, and offered my services to help bring parties in the community together so that the rancor could be reduced, and important work completed. If I can help the City of Biddeford complete the mission of a professional site survey, then I volunteer in the same spirit of collaboration with which I offered my assistance to President Herbert.

You can reach me by phone at 207-590-9614 or by email at cpendle5@gmail.com.

Sincerely,

Craig A. Pendleton

Craig A. Pendleton
81 Cascade Road
Old Orchard Beach, ME 04064

Tonight, we need to remove the passion from the conversation and focus on the technical and legal aspects of this proposal.

And based on these alone I would argue that you cannot approve this project.

15 part C The facility shall be no larger in dimension than necessary to carry on the activity and be consistent with the surrounding character and uses of the area

The site walk was helpful to appreciate the size and scale of this project. Speaking of scale, this site walk confirmed that the numerous regulatory requirements make this so massive it is no longer meet Sec 15c

I implore the University provide a scaled 3D computer rendering to demonstrate this. This will severe restrict movement in and around this area forever.

A 3D rendering will affirm if this is approved, this will be Biddeford's new MERC.

Sec 15 sec 10a When necessary, the removal of trees and other vegetation to allow for construction equipment access to the stabilization site via land must be limited to no more than 12 feet in width. When the stabilization project is complete, the construction equipment accessway must be restored.

The entrance will be a 20' road (not `12 per the law), combined with the turn around and the building as a backdrop will rip open the vegetation to a massive scale. Fire department requirements conflict with an ordinance, the ordinance-the law- still stands.

I also believe it's a violation of original the conditions of approval for the Marine Science Center.

Harry center who gave guidance to the board on the relevant technical sections of the shoreland zone. In addition to the technical areas they were provided, but there are other sections I want to bring to your attention.

Section 1. Purposes. [Ord. of 9-15-1998(4)]

The purposes of this ordinance are to:

to protect fish spawning grounds, aquatic life, bird and other wildlife habitat;

to protect commercial fishing and maritime industries; This project does not

help me as a Maine guide or any of the working fisher people. It will negatively impact us.

to conserve shore cover, and visual as well as actual points of access to inland and coastal waters; to conserve natural beauty and open space; We all use this area to access the river, the beach and the fish. How does this project conserve natural beauty and open space?

UNE by its own admission doesn't have or need the capacity this provides. They already have facilities that can be expanded. Where I come from, we focus on needs, not wants. UNE doesn't need it,, and we don't want it or need it.

Sec 7. Whenever a provision of this ordinance conflicts with or is inconsistent with another provision of this ordinance or of any other ordinance, regulation or statute administered by the City of Biddeford, the more restrictive provision shall control, except that where there are conflicts or inconsistencies between Section 12 (Nonconformance) of this ordinance and any other ordinance, regulation or statute administered by the City of Biddeford, Section 12 (Nonconformance) of this ordinance shall prevail.

This is the second part

In 2001 the SRCC imposed a 250 no build zone. Its important not only to recognize the requirement and that it relates to the ordnance conflicts provision of this ordinance. But let's understand the intent.

During the meeting at the SRCC where this was agreed in order to gain 50' height on the dormitories, in response, Sandra Featherman stated on the record that "the University has absolutely no intention to build within the 250 of the river, and that the city as well as the University believe the buffer the be very sensitive and necessary for the protection of the river."

The intent of UNE accepting this condition was clear. The SRCC reason was crystal clear as the minutes indicated. No more building in the 250 buffer zone period. No exceptions.

This project does not meet the purpose or intent of the shoreland zone and is in direct conflict with the SRCC and UNEs previously stated in intentions, and previous conditions of approval.

To the planning board, you are not responsible for the city administrations failure to guide UNE. Its not your Fault UNE overreached. Under article 10, section 1.b.3 it's your job only to review and approve, approve with conditions or disapprove. Based on the ordinance, based on the law, you must disapprove.

I submit these comments and the minutes from the SRCC from 2001 and 2017 for the record.

Whitten, Nan

From: Mark Robinson <markrobinsonpr@gmail.com>
Sent: Tuesday, June 17, 2025 12:21 PM
To: Planning Board; Whitten, Nan; Galbraith, David
Subject: Fwd: letter for Planning Board
Attachments: Robinson LETTER to Planning Board.pdf

Caution: This is an external email. Please take care when clicking links or opening attachments. When in doubt, contact the IT Department

Good morning. I have downloaded the packet for Wednesday's planning board meeting and reviewed. I have a headache!

On a serious note, I did not find my May 20 letter to the planning board in the packet. This concerns me. If possible, I respectfully would like its omission brought to the board's attention. It is direct commentary on the the UNE pier proposal. Thank you very much.

---m.r.

---------- Forwarded message ---------
From: **Mark Robinson** <markrobinsonpr@gmail.com>
Date: Tue, May 20, 2025 at 3:10 PM
Subject: letter for Planning Board
To: nan.whitten@biddefordmaine.org <nan.whitten@biddefordmaine.org>
Cc: <planningboard@biddefordmaine.org>

Nan, thank you very much for accepting my letter. It is attached.

--
Mark Robinson
207-332-3798
www.MainePR.com
MarkRobinsonPR@gmail.com

From Mark Robinson, Biddeford resident, May 20, 2025

LETTER RE: proposal by the University of New England, new research pier

Dear Biddeford Planning Board,

I submit this letter as comment about UNE's proposal to build a new marine research pier on the Saco River.

I start by presenting you excerpts from a Maine Sunday Telegram article about how MERC came to be, published on February 27, 2000 and written by reporter Kelley Bouchard.

"The cities were impressed by a proposal from the newly formed Kuhr Technologies Inc. (KTI) and General Electric to form the Maine Energy Recovery Co.

"In October, local businessman and former state legislator Plato Truman gave Biddeford Mayor Robert Farley a petition signed by 800 residents. They wanted a nonbinding referendum on the Lincoln Street site.

"'The people, who are proud of their city, are horrified that a project of this magnitude could be put in this location and affect people for the next hundred years,' Truman told Biddeford councilors at the time.

"The council killed the referendum for fear it might jeopardize the project."

I worked for 13 years to help create the political conditions necessary to empower Biddeford's elected leaders to act decisively and remove MERC from Biddeford's downtown. (As they did.) In that 13 years I can't tell you how many times I heard, as MERC was still on the drawing board, how impressed local officials were by the fact that the great and powerful GE was willing to do business with the City of Biddeford. "It's GE, how can we go wrong!" How could we possibly question their extraordinary expertise, went the thinking.

Well, let's not forget that the "experts" are not always right, as Biddeford found out to our deep dismay once MERC started operating. I see distinct parallels with this pier situation. UNE is an impressive institution, yes, but there is no law saying we have to swallow every last bite they try to feed us.

From what I have read in all the media reports, this project has benefitted from an unusual set of circumstances, and its journey to approval seems to have had an exceptionally smooth ride so far. Certain elements of a "normal" review seem to be missing.

I do not know the river well, and so I will withhold any specific critique. I have noticed, however, that many of my friends and neighbors have said they don't oppose a pier for UNE.

What they want to make sure of is that it's built in the right location. That seems eminently reasonable to me.

You cannot go wrong carefully considering information from all sources. I know several members of the current Planning Board, and therefore have the highest confidence in the Board's integrity and its commitment to transparency. Thank you in advance for letting people know that you welcome public input. I have a feeling you might get a lot of it.

There are some very smart people in this community, and they don't all work for engineering firms. Good luck in your deliberations.

Sincerely,

Mark O. Robinson

Mark Robinson
128 Fortunes Rocks Road
Biddeford, Maine 04005
207-332-3798

Whitten, Nan

From: Public Affairs <publicaffairsinfo@gmail.com>
Sent: Monday, June 16, 2025 11:40 AM
To: Grohman, Martin
Subject: Mooring holders repeat challenge to UNE on pier lawsuit, transparency

Caution: This is an external email. Please take care when clicking links or opening attachments. When in doubt, contact the IT Department

PRESS RELEASE from Saco River mooring holders
June 16 2025

Mooring holders repeat challenge to UNE on pier lawsuit, transparency

MEDIA CONTACTS, MOORING OWNERS:

1. Capt. Shawn Tibbetts, captshawntibbets@gmail.com, 207-502-0368
2. Michael Ramunno, mramunno@maine.rr.com, 207-423-3650
3. Tom Hatch, thatch8099@gmail.com, 508-294-2723

(Biddeford, Maine) Private mooring holders on the Biddeford side of the lower Saco River say the University of New England (UNE) carefully avoided the topic of impending litigation about moorings during a site walk on June 9, but should not dodge the issue during a meeting of the Biddeford Planning Board on Wednesday, June 18.

"They didn't say a word about it last Monday, but pretending the problem doesn't exist won't fly," said Shawn Tibbetts, a commercial fisherman and one of the mooring holders who would be directly affected by UNE's pier proposal. "We are unified, we're not moving, and that's final. UNE is powerless to assign moorings, so who are they going to sue to get that location on the river? Don't keep sweeping it under the rug, tell the planning board right now."

Local boaters say between seven and a dozen moorings would be affected by UNE's proposal, including two that are directly on top of the site that the university wants. The Maine Harbor Masters Association has reminded the city that according to its own ordinance, "permission for the construction of any new wharf or pier within the jurisdictional limits of the City shall not be granted without approval of the Harbormaster."

"That location is not available to the university, so the planning board's hands are tied. How can they approve an application in a spot that is already occupied?" Tibbetts asked.

The Biddeford Planning Board meets Wednesday, June 18 at 6:00 p.m., second floor at Biddeford City Hall, 300 Main Street.

###

Whitten, Nan

From: Andrea Delorge <andreacdelorge@gmail.com>
Sent: Thursday, June 12, 2025 11:11 AM
To: Planning Board; Whitten, Nan; Galbraith, David
Subject: a question for UNE to answer next week

Caution: This is an external email. Please take care when clicking links or opening attachments.
When in doubt, contact the IT Department

I read in the Biddeford Gazette that the mooring owners where UNE wants to build their pier have said that they won't move. To me that seems like an obstacle that the university cannot overcome, unless somebody sues somebody. How can the Planning Board approve their application if somebody else is already there?

At next week's meeting I'd like UNE to explain what's going to happen. An answer that they'll persuade the mooring owners to move, and pay for it, is not good enough. Please have UNE explain --- in detail --- what steps they will take to free up that location for building a pier, given what they know now, that the mooring owners won't move.

Thank you for your continued work on this complex project. You are helping the community.

ANDREA

Whitten, Nan

From: Norm Labbe <norm.labbe@gmail.com>
Sent: Thursday, June 12, 2025 11:01 AM
To: Whitten, Nan; Galbraith, David; Plotkin, Alexa; Patoine, Larry; Dubois, Matthew; Lewis, Kayla; Beaudette, Stephen; susan.deschambault@gmail.com; Angers, Roch
Subject: Planning Board site visit to UNE on 6-9-25

Caution: This is an external email. Please take care when clicking links or opening attachments. When in doubt, contact the IT Department

Dear Planning Board,

Thank you for the opportunity to attend the Planning Board's June 9th site visit of UNE's proposed pier location. As stated by the Board at the beginning of the tour, the public was to refrain from commenting to or asking UNE representatives any questions and to submit them in writing to the Board within a few days, in order for the Board to get them to UNE to answer at the upcoming Board meeting on the 18th. Accordingly, the following are observations and questions that came to mind during the site walk.

1. During the site walk UNE stated it was very concerned about minimizing environmental impacts, in particular those relating to the access road (e.g., minimizing width of impact by proposing to cut into bedrock vertically rather than at a slope, etc.). It became obvious while walking to UNE's proposed Pier location 7 that Pier location 8 (which is in the general area of the Harbormasters' recommended location) is a couple hundred feet closer to the beginning of the proposed access road. Wouldn't this result in location 8 requiring considerably less access road – and less environmental impact and less cost – than would location 7? A simple yes or no answer would be appreciated.

2. UNE's proposed $3 + million pier will apparently be paid for in large part by our tax dollars. As such, did UNE consider other potential beneficial uses for the pier? How about the ability to accommodate larger - deeper draft - boats? It appears that the largest boat being considered is the University of New Hampshire's Gulf Challenger, which has a draft of 5 feet (which is potentially problematic given location 7's approximate 6 foot depth at mean low tide). Being that the city of Biddeford has no deep water pier with ocean access, wouldn't the community benefit from the ability to accommodate other ships for things such as emergency response, civil defense or maybe even special events to celebrate the City's nautical heritage? More specific questions on this topic are: Will UNE's Gulf Challenger be able to safely tie up to the proposed pier at a lower than normal (-1.5 ft.) tide? Also, did UNE seriously consider the ability to accommodate boats with more than a five foot draft? A yes or no answer to both of these specific questions would be appreciated.

Thank you for the opportunity to present these observations and questions. I look forward to UNE's responses at your upcoming meeting on January 18. More importantly, I appreciate the Planning Board's insistence on transparency, and the need for the application you are reviewing to be fully documented.

Sincerely,

Norm Labbe
8 Eagle Rock Point
207-229-6324

Whitten, Nan

From: Laura Anderson <laurainbuxton@gmail.com>
Sent: Wednesday, June 11, 2025 12:43 PM
To: Plotkin, Alexa; Patoine, Larry; Dubois, Matthew; Lewis, Kayla; Beaudette, Stephen; susan.deschambault@gmail.com; Deschambault, Susan; Planning Board
Subject: Really bad legal advice

Caution: This is an external email. Please take care when clicking links or opening attachments. When in doubt, contact the IT Department

The City will be sued immediately if UNE's pier application is approved under the current set of "facts." TEC Associates is a not a certified Harbormaster in the State of Maine. All you have to do is be in touch with the Maine Harbor Masters Association to find the truth.

I was at the planning board meeting a couple weeks ago when the lawyer told you that a Harbormaster working for Biddeford has approved UNE's application. I saw your planner nodding along in agreement. That's simply not true. The city's own website says about TEC Associates, "The firm will not be selecting or commenting on the site of the pier." How embarrassing.

It's too bad that the planning board has been so poorly advised by the professionals that are supposed to be helping you. Hopefully board members themselves can insist that the truth be established and the record corrected.

Laura Anderson

Whitten, Nan

From: Hills Beach John <hillsbeachjohn@yahoo.com>
Sent: Wednesday, June 11, 2025 8:28 AM
To: Plotkin, Alexa; Patoine, Larry; Dubois, Matthew; Lewis, Kayla; Beaudette, Stephen; susan.deschambault@gmail.com; Deschambault, Susan
Cc: Whitten, Nan; Galbraith, David; Randy Seaver; newsdesk@sacobaynews.com; srichelieu@metln.org; ggraham@pressherald.com; Planning Board
Subject: Transparency at the 6/18 Planning Board meeting

Caution: This is an external email. Please take care when clicking links or opening attachments. When in doubt, contact the IT Department

Dear Biddeford Planning Board,

By next week's Planning Board meeting, UNE will have had a full month to supply documentation missing from their application, and to address concerns raised by Planning Board members and the public.

1. Mr. Patoine asked to see a copy of the application that UNE filed with NIST.

2. Mr. Dubois requested evidence that UNE provided Maine's Native American Tribes with final pier design and proper notice.

3. The public requests evidence of an Agreement between the City and UNE that justifies the need for pier design to include a fireboat.

4. The public asks why UNE's existing classroom space at the university is insufficient, and why a classroom intruding onto the river is necessary.

5. The public requests documentation that a directive by U.S. Army Corps engineer Heather Stukas was honored. She wrote in 2024 that the Corps must "follow-up with the Biddeford Harbormaster to ensure the new concept is acceptable."

6. The public requests documentation that Wayne Duffett, P.E., president of TEC Associates, approved the location and design of UNE's proposed pier, as claimed by the City Attorney.

7. The public asks for documentation as to when the City of Biddeford formally appointed Wayne Duffett, P.E. as Harbormaster.

8. The public requests documentation that Wayne Duffett, P.E. is a Harbormaster, or is currently training to be certified as a Harbormaster, as specifically mandated by Maine Title 38, Section 1-A.

9. Mooring holders have been clear that they are not moving from the spot in which UNE wants to build a pier. Therefore, the university is inappropriately asking the Planning Board to approve an application at a location that is unavailable. The public requests that during the approaching June 18,

2025 meeting, the Board thoroughly question UNE representatives about their plan to forcibly expel current mooring holders from their locations on the river. The public has a right to know what legal steps UNE will be taking, and when those legal actions will begin.

Once again, we thank the Board for their clear statements about mission, ethics, transparency, and the need for documentation to be complete. The Biddeford Planning Board is the only regulatory agency that has honorably encouraged transparency and public input.

JS

John Schafer

Former Chair, Biddeford Harbor Commission
Hills Beach, Biddeford

Whitten, Nan

From: kbuechs@earthlink.net
Sent: Wednesday, June 11, 2025 10:10 AM
To: Hills Beach John; Plotkin, Alexa; Patoine, Larry; Dubois, Matthew; Lewis, Kayla; Beaudette, Stephen; susan.deschambault@gmail.com; Deschambault, Susan
Cc: Whitten, Nan; Galbraith, David; Randy Seaver; newsdesk@sacobaynews.com; srichelieu@metln.org; ggraham@pressherald.com; Planning Board
Subject: Additional comments/questions for 6/18 Planning Board meeting

Caution: This is an external email. Please take care when clicking links or opening attachments. When in doubt, contact the IT Department

Nan, et al:Please insure this email has gotten to to the right channels and add my comments and questions to the package for next week's Planning Board agenda:1. Given that the Saco River, especially with regard to the location of the pier proposal, is the dividing property line between Saco and Biddeford, **why isn't Saco, as an "abutter," part of the approval process?** More specifically, why isn't the Saco Harbor Master and the Saco Planning Board part of the review process? I have read that this proposal was, at one time on the Saco Planning Board agenda and was unexplicitly removed prior to their meeting. **Note:** when the original Factory Island project was proposed in Saco, our City Manager and the Biddeford Conservation Commission both added written comments to the Saco Planning Board reviews.2. The Saco River Corridor Commission has apparently approved the proposal. Biddeford has two approved representative positions, primary and alternate, on the SRCC. Biddeford did not cast their vote! When I asked why, the Mayor said he was asked by the primary representative if he should be recused because his wife is employed by UNE and they agreed he should recuse himself. Biddeford has no alternate. The Mayor added that he has not appointed an alternate and was having difficulty finding someone to accept that position. **So, ironically, Biddeford did not even vote on this very important proposal.**3. If approved by the Biddeford Planning Board, may their decision be challenged through an appeal before the Biddeford Zoning Board (ZBA)?Kenneth BuechsWard 1282-3954

Whitten, Nan

From: Geoffrey Bove <geoffreybove@gmail.com>
Sent: Monday, June 9, 2025 9:34 AM
To: Whitten, Nan
Cc: Galbraith, David
Subject: Re: Sorry to ask...

Caution: This is an external email. Please take care when clicking links or opening attachments. When in doubt, contact the IT Department

Thank you Nan. I have made a comment to this effect on "UNE Pier Review." I hope that it goes well.
Geoff

On Mon, Jun 9, 2025 at 9:20 AM Whitten, Nan <Nan.Whitten@biddefordmaine.org> wrote:

Good Morning Geoff

This evening's site walk is more like a workshop for our Planning Board. The public is welcome to attend but only to listen, in a workshop we cannot take questions or comments from the public.

David Galbraith, the Planner, will go over this code of conduct at the beginning of the meeting and we hope all will respect that.

Thank you for reaching out.

Please let us know if you have any questions.

Nan.

From: Geoffrey Bove <geoffreybove@gmail.com>
Sent: Monday, June 9, 2025 5:54 AM
To: Whitten, Nan <Nan.Whitten@Biddefordmaine.org>
Subject: Sorry to ask...

Caution: This is an external email. Please take care when clicking links or opening attachments. When in doubt, contact the IT Department

Hi,

I seem to have some moderating influence on issues like the current UNE one by helping people stick to facts. For today's site visit, it seems by some publicity that this will be somewhat of a public forum. My question is- will members of the public be allowed to ask questions to UNE or Planning Board members? If not, I'll respond to the FaceBook posts about this.

Even better, is there a written "code of conduct" for this sort of meeting? I could post that.

I think that it has potential to turn into a circus. I'm very unlikely to attend

Thank you!

Geoff

Geoffrey Bove, DC PhD
dba Bove Consulting
27 Nettie Lane
Kennebunkport ME 04046
207 590 8949

Whitten, Nan

From: Hills Beach John <hillsbeachjohn@yahoo.com>
Sent: Thursday, June 5, 2025 8:30 AM
To: Planning Board
Cc: Whitten, Nan; Galbraith, David; Randy Seaver; srichelieu@metln.org; dmendros@metln.org; ggraham@pressherald.com; newsdesk@sacobaynews.com
Subject: Important clarification before Monday's site walk

Caution: This is an external email. Please take care when clicking links or opening attachments. When in doubt, contact the IT Department

Dear Planning Board,

Since City Hall is closed tomorrow, and the site survey at UNE is on Monday, it occurred to me that I need to send this email today. Hopefully you'll get it in time.

The FAQ that UNE rushed out after the May 21 meeting of the Biddeford Planning Board is in error, and I wanted you to have this information before you look at Site 7 and Site 8 on Monday.

The FAQ states definitively, "Opponents to the Site 7 location are now advocating for an alternative design," and it also states that critics have proposed "a 200-foot pier head." The piece then goes into a lengthy dissertation of why our design is inferior to UNE's preferred design.

The problem with that wordsmithing is that it's completely misleading. Our community group has never produced a design *of any sort*. Nor will we ever produce a pier and dock design. Proposing the best design and location is UNE's job. Not ours, not the Harbormaster's and not anyone else's. But what our neighborhood group *has* done is produce conclusive evidence that shows UNE's argument that Site 7 is the only possibility is flimsy.

Their argument has been advanced in public and false statements to the media and to Biddeford's city attorney by their lawyer and their PR person. Their argument against the *general area* recommended by the Harbormaster, Site 8 or what we call The Forbidden Zone, is that deep enough water does not exist there. They have been adamant about inadequate depth there --- and they're wrong. A GEI memo in the Planning Board's packet confirms that they're wrong. Yet the statements by the lawyer and their PR department have neither been retracted nor corrected. Those false statements remain on the public record, and frankly that seems to be intentional.

Opponents of Site 7 have been quite clear: Almost everyone agrees UNE should have a new pier. As you are looking out at Site 8 on Monday, please keep in mind we are certain that UNE's talented engineering vendors could easily design an innovative pier system in that *general area*, recommended by local river experts, that at low tide has *twice* the depth of water that Site 7 does.

"*Look at the deep water at Site 8*" is our position, plain and simple. It's unfortunate that UNE falsely alleges we have proposed a pier design. It's important for the Planning Board to know that we haven't, and that we won't. We appreciate and applaud the Planning Board's clear intent to consider all information objectively.

Respectfully,

JS
John Schafer

Whitten, Nan

From: Public Affairs <publicaffairsinfo@gmail.com>
Sent: Monday, June 9, 2025 7:31 AM
To: Emily.Horton@mail.house.gov; Sarah_Stanley@king.senate.gov
Subject: Biddeford mooring holders to UNE: "Announce your pier lawsuit tonight"

Caution: This is an external email. Please take care when clicking links or opening attachments. When in doubt, contact the IT Department

PRESS RELEASE

Biddeford mooring holders to UNE: "Announce your pier lawsuit tonight"

(Biddeford, Maine) Private mooring holders on the Biddeford side of the lower Saco River say that at a planned site walk tonight, the University of New England (UNE) should announce when and on what legal basis the university will sue the city.

"We legally hold moorings where they want to build a pier, and we've already told them that we're not moving," said Shawn Tibbets, a local commercial fisherman. "But UNE never listens, so here's the deal. They have to sue Biddeford to force the city to move our moorings, and that's just for starters. So make the announcement tonight, to the planning board, that you're filing a lawsuit to push us out. That's the only possible way UNE gets rid of us, but their chances are slim to none."

Biddeford's planning board is attending a site walk tonight at 5:00 p.m. on the UNE campus. It will tour "Site 7," where UNE wants to build a new marine sciences research pier. With the help of U.S. Senator Collins, UNE has secured a $3.5 million grant from the National Institute of Standards and Technology (NIST), to help with pier construction. But those with local knowledge of how the river flows say there's a better site choice very close by.

Residents packed a planning board meeting on May 21 to oppose the sketch plan for the pier's design and location. Not one person spoke in favor of the university's proposal, while more than a dozen aired complaints about a lack of transparency and UNE's arrogance in ignoring local expertise. Failing to sense the mood after the meeting, university president James Herbert made things worse by broadcasting an email on May 27 in which he accused local residents of making "outright false statements."

Mooring holders don't own the submerged land on which their mooring are placed, but their mooring locations are legally assigned by Biddeford's harbormaster. UNE has no power at all to assign, remove or replace moorings. Tibbets and others say the only way for UNE to get their coveted pier location is to ask a court to make Biddeford expel the people who are already there.

The Maine Harbor Masters Association has reminded the city that according to its own ordinance, "permission for the construction of any new wharf or pier within the jurisdictional limits of the City shall not be granted without approval of the Harbormaster." Earlier this year, several mooring owners expressed concern to Biddeford's harbormaster that they would lose their moorings.

He wrote in reply, "I am writing to let you know that, as Harbormaster, I have no plans to remove or relocate any existing mooring. My records indicate that you are a mooring owner in good standing, your fees are paid up to date, and there have been no navigation issues connected to your boating activities on the river."

UNE downplays the moorings issue by saying that only one or two mooring are affected. However, those two mooring owners are part of the group that steadfastly refuses to move. Tibbetts said UNE circulated a public relations FAQ sheet a few days after the May 21 planning board meeting in which they wrote, "UNE will pay to relocate" moorings affected by the new pier.

"I guess they don't understand the English language over there at the college. We're not moving. The site they want for their pier is unavailable to the University of New England," Tibbetts said.

###

Whitten, Nan

From: Hills Beach John <hillsbeachjohn@yahoo.com>
Sent: Tuesday, June 3, 2025 1:26 PM
To: Planning Board; Galbraith, David; Whitten, Nan
Cc: Randy Seaver; wmtw@wmtw.com; tvmail@wgme.com; desk@newscentermaine.com; srichelieu@metln.org; ggraham@pressherald.com; dmendros@metln.org; newsdesk@sacobaynews.com
Subject: UNE pier: an ill-advised change in course

Caution: This is an external email. Please take care when clicking links or opening attachments. When in doubt, contact the IT Department

Dear Planning Board,

After many encouraging comments by several Members during your May 21 meeting about transparency and openness, I have no choice but to strenuously object that an email sent by the university's Alan Thibeault has had undue influence on the scheduling of a site survey on the UNE campus. Yes, I learned this morning that UNE butted in and the site survey will now be rushed to take place on June 9th after all.

In their recent FAQ, the university wrote that federal funding is "not contingent on location or on a specific timeline…"

Get the facts --- there is no rush!

The Planning Board had started confidently down the road to full transparency and openness, until Mr. Thibeault sent his email with text highlighted in red. Now the City has caved and reversed course.

Mr. Angers wanted to be on the site survey. Mr. Patoine specifically asked that a system be in place for measuring depth at various locations. Now neither of those can happen. Further, there will be plenty of low tides this summer, after the normal workday is done, and with plenty of daylight left. I understand that a commercial fisherman formally offered to organize an expedition from the Camp Ellis pier for the Board, on boats with depth finders. That would have satisfied Mr. Patoine's curiosity about depths. NONE of that information can be collected by walking along the shore. Why even bother?

There was PLENTY of time to organize this outing correctly, because UNE's federal funds are not in any danger whatsoever. But UNE wants this pier approved quickly, facts be damned.

This is an extremely unfortunate turn of events. Mr. Thibeault should not have sent that email. The university wrote in its FAQ, "UNE has responded to all questions posed by the various regulatory agencies. As noted above, UNE is happy to meet with any interested community members to address questions about the proposed pier."

BALONEY.

If UNE was "happy" with the fact-finding process, they would not have torpedoed the attempts by Mr. Patoine, Mr. Angers, and the rest of the Board to fully inform themselves.

Despite this bad news, my neighbors and I continue to hope that the Board is determined to make sure the application is complete, and to be guided by a Code of Ethics in doing so. Thank you for hearing me out on UNE's latest attempt to subvert the regulatory process.

Respectfully,

JS

Whitten, Nan

From: Walter Alexander <walexanderele@gmail.com>
Sent: Wednesday, May 21, 2025 9:13 PM
To: Whitten, Nan; Galbraith, David; Planning Board
Subject: UNE pier **I believe you were misinformed

Caution: This is an external email. Please take care when clicking links or opening attachments. When in doubt, contact the IT Department

To whom it may concern:

I spoke this afternoon, my name is Walter Alexander. I believe you were misinformed by the city attorney who doesn't seem to be doing very well at his job. Please look into Sec. 74-35. Construction of wharf, pier or landing regulated. (D)

Ch 70 **Utilities**
Ch 71 **Utilities/Industrial Pretreatmen Program**
Ch 74 **Waterways**
Ch 74 Art II Div 1 GENERALLY
Sec. 74-26 Definitions.
Sec. 74-27 Qualified mooring inspect
Sec. 74-28 Channels.
Sec. 74-29 Abandoned vessels.
Sec. 74-30 Derelict vessel.
Sec. 74-31 No-wake zones, headway zones, idle speed zones, no-wake zones, slow-no-wake zones.
Sec. 74-32 Obstructing public wharv landings.

Whitten, Nan

From: Giselle Lawrence <giselleannlawrence@gmail.com>
Sent: Wednesday, May 28, 2025 12:41 AM
To: jherbert1@une.edu
Cc: athibeault@une.edu; rschneider5@une.edu; sdelage@une.edu; Planning Board; pam_buck@collins.senate.gov
Subject: Please clarify for Biddeford Planning Board

Caution: This is an external email. Please take care when clicking links or opening attachments. When in doubt, contact the IT Department

Mr. Herbert, this is from the FAQ you sent around yesterday:

Is UNE at risk of losing federal funding if the pier is not built at site 7? *"No. The University received a federal appropriation of $3.5 million to support building the pier. These funds are not contingent on location or on a specific timeline for the project."*

This is what your lawyer wrote to the City of Biddeford last year:

"Very importantly, continued delays would put at risk significant federal dollars specifically earmarked by Senator Collins for this project."

You wrote in your "Dear friends" email yesterday that "outright false statements" cannot go unanswered by UNE. Perhaps you can start answering false statements by explaining to the Biddeford Planning Board why UNE's lawyer lied to the City Attorney.

Whitten, Nan

From: Hills Beach John <hillsbeachjohn@yahoo.com>
Sent: Wednesday, May 28, 2025 11:12 AM
To: Planning Board; Whitten, Nan; Galbraith, David
Subject: Missing documentation from UNE's pier application
Attachments: email MAINE HARBORMASTERS.pdf; email STUKAS.pdf

Caution: This is an external email. Please take care when clicking links or opening attachments. When in doubt, contact the IT Department

Dear Biddeford Planning Board,

As I do my best to help represent many of my coastal neighbors, I regret that I am submitting yet another communication about UNE's pier proposal to you, but I feel I have no other choice. Please bear with me.

Board members were articulate on May 21 about mission, ethics, and the need for documentation to be complete. Without documentation, declarations by the applicant insisting their word is gospel cannot be admitted as evidence to the Board. I know that the community very much appreciated your very clear statements of purpose and process integrity.

We believe a significant amount of documentation is missing from UNE's application, and therefore it remains incomplete, unable to be approved in its current state by the Biddeford Planning Board. We cite the following omissions.

- At the last Planning Board meeting, the Chair asked, "So to be clear, a Harbormaster has approved this application." The City Attorney answered, "Yes." Accordingly, if the City Attorney is correct, the Board must be provided with written documentation supplied to the City by Wayne Duffett, P.E. TEC Associates, that he approved the design and location of UNE's proposed pier.
- On June 25, 2024 Heather Stukas of the U.S. Army Corps of Engineers wrote to her colleagues that UNE had modified its pier concept. (Email attached.) She wrote that therefore the Corps must "follow-up with the Biddeford Harbormaster to ensure the new concept is acceptable." The Board should request proper documentation that the sequence of events Stukas requested took place sometime after June 25, 2024.
- Mr. Patoine requested that an exact copy of the application UNE filed with NIST be provided to the Board. This is especially important so that the Board and the public can understand what representations UNE made to federal authorities about the local, state and permitting process.
- Mr. Dubois requested evidence that Maine's Native American Tribes have been properly notified. Obviously, proper notice includes the courtesy of seeing final pier design, so that they understand the full impact of what is proposed.
- The application must include clear evidence that the Biddeford Harbor Commission has approved the design and location of the pier. The City received specific professional direction (email attached) from the Maine Harbor Masters Association on June 4, 2024 as follows: "Section 74-35b of the Biddeford Harbor Ordinance states, 'permission for the construction of any new wharf or pier within the jurisdictional limits of the City shall not be granted without approval of the Harbormaster, along with federal, state and local governing authorities.' Assuming the harbormaster is unable to perform this duty for whatever reason, it usually falls to the assistant harbormaster to perform said duties. If there is no assistant or if the assistant also is unable to perform this duty, it is not uncommon for a Harbor

Commission to perform this function. In fact, Section 74-62a of your harbor ordinance makes it very clear that the Biddeford Harbor Commission '...shall meet to hear appeals of decisions made by the Harbormaster and to act as an advisory vehicle for any construction from the mean high-water line down...'" The Association's Training Coordinator then concluded, "...we recommend that you work within the review hierarchy laid out in your harbor ordinance." Biddeford does indeed have a Harbor Commission, and both the Harbormaster and his assistant were prevented from approving UNE's pier design and location. Therefore, the Planning Board needs to see documentation that the Harbor Commission deliberated and approved design and location, as required by ordinance and as affirmed by the Maine Harbor Masters Association.

- The Board should request any evidence of a signed agreement between the City and UNE about hosting a fireboat. If one doesn't exist, the need isn't documented, and the pier is over-designed and too large by definition.
- UNE should explain to the Board why existing classroom space at the university is insufficient, and why a classroom intruding out onto the river is necessary.
- While threatening to sue the City, UNE's lawyer wrote several times that a general dock site recommended by Biddeford's Harbormaster doesn't have deep enough water to be useful. The university's PR person told the Portland Press Herald the same thing. Yet GEI, the paid consultant working for UNE on this application, wrote that indeed the alternative location has ***more*** depth than does Site 7, but that the university doesn't need that much water. ***This glaring contradiction cannot go unexplained by UNE representatives*** as they seek Board approval for their application. If their attorney won't fully retract his false claims in a direct statement to this Board, then UNE must supply detailed depth data to the Board proving that he is correct.
- Mooring owners couldn't have been any clearer that they won't move from the impact area created by Site 7. That discussion is over. The site at which UNE wants to build is simply *unavailable*, and UNE's contention that they will pay to relocate mooring owners is obsolete. It's now a non-starter and a non-explanation. The university needs to spell out for the Board how it will make the site available by suing either the mooring holders or the City, and forcing expulsion of the moorings from Site 7.
- The Board should probably ask the City Manager, the City Attorney or the City Council if they have plans to expel current mooring holders from their legally-held locations. If they do not, then Site 7 remains unavailable to UNE for building a pier.

Thank you for accepting these observations from several of my neighbors and me.

JS
John Schafer
Former Chair, Biddeford Harbor Commission
Hills Beach, Biddeford

Whitten, Nan

From: Hills Beach John <hillsbeachjohn@yahoo.com>
Sent: Tuesday, May 27, 2025 9:12 AM
To: Planning Board
Cc: Whitten, Nan; Galbraith, David; aarondana@wabanaki.com; Grohman, Martin; jmacphail@sacomaine.org
Subject: UNE pier: proper notification to Maine's Tribes

Caution: This is an external email. Please take care when clicking links or opening attachments. When in doubt, contact the IT Department

TO: Biddeford Planning Board, May 27, 2025

In the May 21 meeting, Member Dubois noted that Staff had reported as "not received" certain evidence of notification. Proper notification is required for the full list of Native American Tribes that Mr. Dubois recited. UNE only provided evidence to the Biddeford Planning Board that a single letter was sent on April 10, 2023, *well before* the pier design was even close to being finished. (As the Planner noted during the meeting, he only received full pier design in April of 2025, two years later.)

For the application to be complete, UNE must document that *all* the entities Mr. Dubois listed have been properly notified. Further, I would suggest that just as Mr. Galbraith and the Board have been provided with final design, then UNE must prove that each of the Tribes also received the same courtesy. Proper notification logically includes a copy of final design so that each Tribal entity can grasp the *full impact* of what is proposed.

Further, the way the discussion unfolded the other night, I believe some folks watching the meeting could have mistakenly concluded that the City Attorney was saying that the Tribes had been properly notified and that they had approved pier design and application. "That criteria for the City has closed," he said convincingly.

On Friday, May 23, 2025, I called Chief Aaron Dana, voting member of the Passamaquoddy Tribe in the Maine House of Representatives. I explained to Mr. Dana that the UNE application is now in front of the Biddeford Planning Board and specifically asked him if design and location of this pier have been approved. He confirmed that they have not. That is an important point for the Board, the public, City officials and the media to understand.

I have copied Chief Dana to this email. Also, I conclude this communication by reporting to the Board that after the May 21 meeting, coastal residents in Saco and Biddeford very much appreciate your insistence that UNE's application must be complete, and include full documentation. Validation that the Planning Board process will be transparent and thorough comes is a great relief to this community. Thank you for your professionalism.

Sincerely,

JS

John Schafer, Former Chair, Biddeford Harbor Commission

P.S.

- VIDEO Excerpts, May 21 Planning Board meeting, discussion of Native American notification: https://youtu.be/lyBh7aeZaPY
- QUOTE from Rep. Aaron Dana, Passamaquoddy Tribe, Maine Morning Star, January 15, 2025: *The land and water resource "belongs to the seven generations after us, so we only take what we need and make sure that it is always clean and accessible for our children's children's children, and so on."*

TEC ASSOCIATES CONSULTING ENGINEERS

22 July 2024

Mr. James A. Bennett
City Manager
City of Biddeford, Maine
205 Main Street
Biddeford, ME 04005

Re: Agreement for Professional Engineering – UNE Pier Project

Dear Mr. Bennett:

TEC Associates proposes to provide professional engineering services for the above referenced project for a fee of $2,800. Our scope of services for this project includes the following tasks:

1. Review an application by the University of New England to construct a pier on the Saco River in Biddeford and make a determination if the application contains the information required by Section 74-35 (c).

All work shall be in accordance with the attached *Statement of Terms and Conditions* and *Engineering Rate Schedule*. Thank you for asking us to assist you with this project.

Very truly yours,
TEC ASSOCIATES

Wayne Duffett, P.E.
President

Enclosed: Statement of Terms and Conditions
Engineering Rate Schedule

I understand and accept this proposal for the City of Biddeford, Maine.

By: _____ Title: City Manager
(Authorized Representative)

By: James A Bennett Date: 7.23.24
(Print or Type Name)

Please sign and return one copy of this proposal to TEC Associates.

40 Mechanic Street South Portland, Maine 04106
Phone: 207-767-6068

John Schafer
Former Chair, Biddeford Harbor Commission

Biddeford Planning Board
c/o Alexa Plotkin, Chair
Biddeford City Hall
205 Main Street
Biddeford, Maine 04005

May 24, 2025

Dear Chairperson Plotkin,

Thank you for the professional manner in which you conducted the May 21 Planning Board meeting. Your experience was evident, and your guidance to those members of the audience who are unfamiliar with meeting protocol was extremely helpful.

I am following up on one important item that was discussed *without ambiguity* that evening. Were the Board to approve the application under present circumstances, the City will face litigation. That's because the Board, and you in particular, received an emphatic but totally incorrect answer from the City Attorney. Here's the transcript of his inaccurate legal analysis:

> Chair: "So to be clear, a Harbormaster has approved this application."
> Attorney: "Yes, yes."
> Chair: "Not necessarily *the* Harbormaster that we had in place before, but an interim Harbormaster that was assigned…"
> Attorney: "Yes."
> Chair: "…in their stead."
> Attorney: "Yes."
> Chair: "OK. I'm just trying to understand that."
> Attorney: "Yes. It should be in the package, but if not I can get it to you."

No such thing ever happened. The City Attorney is wrong.

Attached please find a 1-page letter signed 7/24/24 by TEC Associates, the consultant the City Attorney mistakenly calls a "Harbormaster." You'll see that company president Wayne Duffett was tasked *only* with making sure the application was "complete" before it was sent off to state and federal agencies for review. That's *all he did* --- perform a mundane bureaucratic chore to make sure the application contained the right pieces of paper. The taxpayers gave him $2,800 for his troubles.

Mr. Duffett is no Harbormaster. In fact, the FAQ section still on the City website spells it right out: "The firm will not be selecting or commenting on the site of the pier. The work of the consultant is merely to determine completeness of application." Exactly as outlined in Mr. Duffett's letter to the City Manager.

In a letter the following month to UNE, the City Manger wrote, "While I don't believe it is necessary, let me emphatically state that this communication does not in any form, imply that the City has in any way made a determination that the location submitted has been approved."

In your packet you will not find any listing of credentials that confirms Mr. Duffett is a Harbormaster. Nor will you find any document from Mr. Duffett confirming that he approved the design and location of the proposed pier. And the City Attorney will not get these documents to you as he promised, because they don't exist.

It is illuminating to study the advice and observations that you provided to your fellow Board members during the May 21 meeting:

"I think there's a reference throughout their application…to documents…you know, these professionals have approved this, and it's they've done this, they've done this, and I appreciate that all that happened, but we often say on this dais, like if I don't have it in front of me, it's like it *never* happened. Because if I can't see it, if I can't know, that it happened, like we are …responsible for saying yay or nay to some very big projects that have huge impacts on Biddeford and it is in our Code of Ethics that we as individual members have all of the information that we need to make decisions in this capacity, so I request all those documents that show any sort of analysis or decision making documentation."

You were right on the money with that analysis. If the Board doesn't have the proof, it didn't happen.

I have the highest respect for the City Attorney. Almost always he advises the City well, and we are all entitled to an occasional mistake. But as I pointed out, Biddeford is now in legal jeopardy if the record is not corrected --- and corrected in the same emphatic manner that the original mistake was made.

The Board cannot approve UNE's application with that faulty legal counsel lingering on the public record. No Harbormaster has approved UNE's application. There are many other documents missing from that application as well, and that is why it remains incomplete.

Thank you very much for reviewing my email and a HUGE thank-you, to you and the Board, for making it very clear that you are listening to citizen input.

Sincerely,

John Schafer
Former Chair, Biddeford Harbor Commission

Craig A. Pendleton 81 Cascade Road Old Orchard Beach, ME. 04064
207-590-9614 cpendle5@gmail.com

5/22/2025

To: Biddeford Planning Board

Issue: University of New England Pier Proposal

Dear Planning Board Members,

My name is Craig Pendleton. I was a long-time resident of Saco and now reside in Old Orchard Beach. I feel compelled to provide written comments on the subject of the UNE Pier Proposal.

Local Knowledge and Expertise

I spent 46 years in the commercial fishing industry, served as executive director of the Biddeford+Saco Chamber of Commerce+Industry and most recently as Director of Transportation at BSOOB Transit. I was appointed to the inaugural Saco Coastal Waters Commission and served for several years. Let me touch on my interactions with UNE as it relates to my career.

Much of my commercial fishing career was spent navigating the Saco River and Saco Bay. Due to my connections within the Chamber, my expertise and local knowledge of the river and surrounding coastal waters, I was engaged by the University of New England for five years to help with their newly developed Marine Science Entrepreneur Degree. Well over ten years ago, I was consulted by faculty at the Marine Science Center on concept plans being developed for a research pier. That design was very similar to the one you're now examining but with far less detail.

It was my opinion then, as it is now, that there are legitimate concerns regarding the proposed location.

1. As it sticks out 150 ft into the river, I felt it would be a hazard to navigation during foggy and bad weather situations as many vessels do not have radar and it is a historically popular recreational fishing spot.
2. Winter ice build up and ice flow would cause damage to the pier and shoreline. As an example, the Camp Ellis pier takes a beating from ice even with the thick ice sheathing we added to the upriver facing section of the pier.
3. The proposed area has a very strong current making it difficult to maneuver and dock a vessel. As another example, the last two boats I owned were 45 ft and 54 ft both drawing between 6 and 9 feet of water respectively. Even with 350-450 horsepower, there were several occasions I could not safely operate and maneuver.
4. The proposed area is too shallow. Why would UNE want to limit future expansion and usage of the pier and facilities? As silt and mud from upriver makes it way downriver, the new structure could actually create enough of an obstacle to fill in an already shallow area thus requiring some level of dredging on a regular basis.

Education and Collaboration

I continue my relationship with UNE. As executive director of the Biddeford+Saco Chamber, I was asked to pick up President Herbert when he was hired and moving to Maine.

Craig A. Pendleton 81 Cascade Road Old Orchard Beach, ME. 04064
207-590-9614 cpendle5@gmail.com

He told me that he spoke fluent French so I took him to LaKermesse where he interacted with the organizers. James and I have maintained a positive and respectful friendship.

Annually, I speak to students in the Marine Science Program on the history of fisheries management and how I was involved in creating Northwest Atlantic Marine Alliance back in 1998. The discussion almost always turns to how students can collaborate with marine resource users after they graduate. As this relates to the positioning of the proposed pier, it is hard to not notice the significant improvements being made in the lobby of the Marine Science Center. The view will overlook the proposed location.

Collaboration is the cornerstone of my career. In my roles as Chamber Executive Director and Director of Transportation at BSOOB Transit, I worked collaboratively with President Ripich and staff at UNE to incentivize students into our downtowns with discounts and free public transportation. We put aside the negative past relations with the City and were building toward a positive future. I had high hopes that the university would continue to follow in that path. Now I am not quite so sure.

Reputation Risk

I have served on the Board of PeoplesChoice Credit Union for thirty years. One of our strategic principles is: do not create a product or service that will impact our reputation in the community. It is concerning that this pier proposal has caused such unnecessary controversy. I personally told President Herbert during a phone call, that he initiated, that turning over the public comments, interaction and public face of UNE to hired lawyers was a mistake. Threatening a lawsuit if they don't get their way doesn't sit well with anyone. Collaboration ended at that point. And here we are.

It is an interesting fact that during your May 21 meeting, not a single person said they don't want UNE to build a research pier. What I question is why so many local opinions, local expertise of the river and local knowledge of underlying conditions related to the proposed sight get trumped by paid consultants and lawyers.

If this pier proposal is passed, it will be interesting to look back after 10 years (if I'm lucky enough to be above the dirt) and see if negative impacts lead the community to say, "I told you so." I can do that now with many fisheries management decisions that I opposed in the past, but I can assure you that eventually being proven right about a bad decision years ago doesn't feel good. At all.

Thank you for your time and consideration of my comments.

Respectfully,

Craig A. Pendleton

Craig A. Pendleton

From Mark Robinson, Biddeford resident, May 20, 2025

LETTER RE: proposal by the University of New England, new research pier

Dear Biddeford Planning Board,

I submit this letter as comment about UNE's proposal to build a new marine research pier on the Saco River.

I start by presenting you excerpts from a Maine Sunday Telegram article about how MERC came to be, published on February 27, 2000 and written by reporter Kelley Bouchard.

"The cities were impressed by a proposal from the newly formed Kuhr Technologies Inc. (KTI) and General Electric to form the Maine Energy Recovery Co.

"In October, local businessman and former state legislator Plato Truman gave Biddeford Mayor Robert Farley a petition signed by 800 residents. They wanted a nonbinding referendum on the Lincoln Street site.

" 'The people, who are proud of their city, are horrified that a project of this magnitude could be put in this location and affect people for the next hundred years,' Truman told Biddeford councilors at the time.

"The council killed the referendum for fear it might jeopardize the project."

I worked for 13 years to help create the political conditions necessary to empower Biddeford's elected leaders to act decisively and remove MERC from Biddeford's downtown. (As they did.) In that 13 years I can't tell you how many times I heard, as MERC was still on the drawing board, how impressed local officials were by the fact that the great and powerful GE was willing to do business with the City of Biddeford. "It's GE, how can we go wrong!" How could we possibly question their extraordinary expertise, went the thinking.

Well, let's not forget that the "experts" are not always right, as Biddeford found out to our deep dismay once MERC started operating. I see distinct parallels with this pier situation. UNE is an impressive institution, yes, but there is no law saying we have to swallow every last bite they try to feed us.

From what I have read in all the media reports, this project has benefitted from an unusual set of circumstances, and its journey to approval seems to have had an exceptionally smooth ride so far. Certain elements of a "normal" review seem to be missing.

I do not know the river well, and so I will withhold any specific critique. I have noticed, however, that many of my friends and neighbors have said they don't oppose a pier for UNE.

What they want to make sure of is that it's built in the right location. That seems eminently reasonable to me.

You cannot go wrong carefully considering information from all sources. I know several members of the current Planning Board, and therefore have the highest confidence in the Board's integrity and its commitment to transparency. Thank you in advance for letting people know that you welcome public input. I have a feeling you might get a lot of it.

There are some very smart people in this community, and they don't all work for engineering firms. Good luck in your deliberations.

Sincerely,

Mark O. Robinson

Mark Robinson
128 Fortunes Rocks Road
Biddeford, Maine 04005
207-332-3798

Whitten, Nan

From: Galbraith, David
Sent: Tuesday, May 20, 2025 1:12 PM
To: Whitten, Nan; Alan Thibeault
Subject: FW: MEDIA ADVISORY: university's pier meeting is tomorrow night

FYI:

From: Hills Beach John <hillsbeachjohn@yahoo.com>
Sent: Tuesday, May 20, 2025 1:10 PM
To: Grohman, Martin <Martin.Grohman@Biddefordmaine.org>
Subject: MEDIA ADVISORY: university's pier meeting is tomorrow night

Caution: This is an external email. Please take care when clicking links or opening attachments. When in doubt, contact the IT Department

ADVISORY

MEDIA CONTACT: John Schafer, schaferniohn@yahoo.com

(Biddeford, Maine) The University of New England (UNE) presents a sketch plan of its proposed marine sciences research pier to the Biddeford Planning Board tomorrow night.

WHAT: Planning Board Meeting, application for controversial Saco River pier proposal
WHEN: Wednesday, May 21, 6:00 p.m.
WHERE: City Council Chambers, 2nd floor, Biddeford City Hall, 205 Main Street
WHO: University of New England, GEI Consultants (for UNE), area residents, Biddeford Planning Board

The meeting occurs after the U.S. Army Corps of Engineers announced that it had refused to consider all public input that had been sent to it earlier this year. The Corps then issued UNE a permit. In contrast, the Biddeford Planning Board has signaled that it welcomes public input.

Local residents have complained about a lack of transparency in local, state and federal review, as well as what they say are false public statements by UNE's attorney. Also, private mooring owners have notified the City that they will not move from the spot in which UNE wants to build its pier. The university has yet to reveal how they plan to force the mooring owners out of the way.

The university has threatened to sue Biddeford if their proposed location is not approved as submitted. Their attorney has written that any delays in approving what UNE wants threatens a $3.5 million federal grant from the National Institute of Science & Technology to help build the pier.

---END---

Whitten, Nan

From: Pier Review <unepierreview@yahoo.com>
Sent: Sunday, May 18, 2025 11:19 AM
To: Grohman, Martin; jmacphail@sacomaine.org
Cc: cfox@metln.org; dmendros@metln.org; erussell@pressherald.com; sean.a.murphy@charter.com
Subject: Crucial UNE pier meeting, survey results available

Caution: This is an external email. Please take care when clicking links or opening attachments. When in doubt, contact the IT Department

Key Meeting

The Biddeford Planning Board gets its first look at UNE's proposed Saco River pier this Wednesday, May 21, at 6:00 p.m. The meeting is on the 2nd floor of Biddeford City Hall, in the Council Chambers. Saco's mayor has said the controversy has nothing to do with Saco residents, but it does. The Saco is a joint jurisdiction river. Saco residents please feel free to attend and speak your mind.

Survey Results

A survey entitled, "Your opinion about UNE and its new marine sciences research pier?" has run for the last 3 weeks. Almost 300 people have taken it.

Note that Questions 6 and 13 have more than a couple hundred comments, so you have to scroll to read all of them. The comments are unedited. Luckily only a few felt compelled to use profanity. Here's the link to the survey results:

https://www.surveymonkey.com/results/SM-GTjzlqBu_2B6Q1DsFeDdwv8A_3D_3D/

Not a scientific poll, it is what it is, a simple survey. Best not to draw any absolute conclusions from it, other than government leaders and the media might be interested in the results. Methodology: the link to SurveyMonkey was put in a Facebook post and then boosted. The target audience was Facebook accounts in Biddeford, plus a radius of 10 miles. Those who answered are the people who wanted to answer --- no demographic data is attached to the results.

Keeping Community Informed

UNE Pier Review is an informal coalition of Saco & Biddeford residents that formed after the chair of the Biddeford Harbor Commission resigned last summer, objecting to a lack of government transparency about the proposed pier. On Facebook:
https://www.facebook.com/profile.php?id=61561717344761

Whitten, Nan

From: Hills Beach John <hillsbeachjohn@yahoo.com>
Sent: Thursday, May 15, 2025 11:28 AM
To: Planning Board; Galbraith, David; Whitten, Nan
Cc: srichelieu@metln.org; Randy Seaver; newsdesk@sacobaynews.com
Subject: Public comment UNE pier proposal
Attachments: Stukas.pdf

Caution: This is an external email. Please take care when clicking links or opening attachments. When in doubt, contact the IT Department

To the Biddeford Planning Board:

Attached please find a copy of an email sent on June 25, 2024 by Heather Stukas at the U.S. Army Corps of Engineers. At the time she was the project manager for the UNE pier application, but was getting ready to move on to other duties. She was writing to two of her colleagues about how her replacement should approach critical concerns.

In her email she made it clear that Biddeford's Harbormaster disliked the project due to navigational concerns. She was explicit that her replacement should "follow-up" with the Harbormaster to make sure UNE's final design was acceptable.

You should be aware of this, because I know that the Planning Board must concern itself with lawful and proper procedure. I would bet it's absolutely certain the Army Corps never secured "acceptance" by the Harbormaster. Or any other City official, for that matter. I suggest that the Board look into this matter during its regulatory review.

Also, it should be noted that in late March of this year, Stukas' replacement notified local residents that all public input and comments that had been supplied to the Army Corps about the application were ignored, as the agency reached its decision to issue UNE a permit.

I know we will get far better diligence from the Biddeford Planning Board. Thank you very much for considering my input.

John Schafer
Hills Beach, Biddeford
former Chair, Biddeford Harbor Commission

Whitten, Nan

From: Kyle H. Noble <noblehouse@maine.rr.com>
Sent: Thursday, May 15, 2025 10:06 AM
To: Phinney, Brian
Cc: Grohman, Martin; Center, Harry; Whitten, Nan; Galbraith, David; Planning Board
Subject: Research Pier to intrude or not ?

Caution: This is an external email. Please take care when clicking links or opening attachments. When in doubt, contact the IT Department

Dear Mr. Phinney,

Seven weeks ago I submitted photographic evidence to the U.S. Army Corps, and a press release entitled, "Drone photograph refutes UNE lawyer's claim." The package of materials detailed false statements by the university's lawyer about water depth along the banks of the Saco River.

On April 21, I asked you if the City had received any communication from UNE either refuting the charge that the statements were false, or retracting the statements and admitting a mistake had been made. You did not reply to my April 21 email.

I have submitted an updated package to the Biddeford Planning Board that includes the same drone photograph. Like before, it proves that the lawyer's statements about inadequate water depth at a suggested alternative location are false, and it proves that local experts have been correct about river depths all along.

Respectfully, there is no other interpretation for your non-reply other than the City did not receive a rebuttal from UNE. This is logical because facts are facts. There is plenty of water for UNE's pier where the harbormasters have always said there was, in their suggested alternative location. While UNE's claim of inadequate water depth was probably useful in threatening the city with a lawsuit, it was never true. It still isn't.

In contrast, the materials I have submitted to the Planning Board are accurate. Because the truth can't be altered I am expecting to hear an argument for disqualification of everything I have said along with impossible reasoning as to why UNE should prevail for its first choice of location without any public vetting of a much less intrusive and fully functional construction. Sorry to UNE if it may cost more to build yet that can be the nature of public protection.

Yours truly,

Kyle H. Noble
56 Hills Beach Road
#207-468-5296

Letter of Concern and Inquiry

ATTN: Biddeford Planning Board / City of Biddeford

Subject: University of New England (UNE) Pier proposal

Date: 14 May 2025

Dear members of the planning board and any person or party representing the interests of the City of Biddeford,

It is my understanding that the following two statements are true: First, UNE has submitted an application to build a pier in a location that is currently in use by commercial fisherman for the purposes of mooring their vessels. Second, the Biddeford Planning Board intends to meet at 6:00 PM on 21 May 2025 regarding this application. As a mooring holder (#72), payments current and in good standing, I have some concerns and inquiries that I would like to bring to the attention of the board. The following is a list of concerns or inquiries that I share with other citizens of Biddeford and the surrounding areas that are impacted by this proposal:

1) A decision of this magnitude should not be taken lightly as it involves public areas that are considered property of the City of Biddeford, State of Maine, and the public at large. The decision to divest any property, land space, or access to navigable waters from the City to another entity is a decision that belongs to the citizens of Biddeford, the citizens of the local area, and the public at large. To my knowledge, none of these parties have been notified of this decision or voted on this issue as of the date of this letter.

2) A decision of this nature is permanent and is highly unlikely to be reversed or modified in the future, thus the importance of involving all interested stakeholders in the decision.

3) Has the planning board and all responsible parties conducted a comprehensive analysis of the proposed location and any alternate locations as a part of their decision?

4) Has the planning board and all responsible parties considered alternate locations for the pier that would be suitable for its intended operation and use and not change any current mooring locations?

5) What does the planning board and all responsible parties intend to do about the moorings that will be affected if the proposal is accepted as written?

I humbly ask that you carefully consider the magnitude of this decision and how it impacts the people of our community. On a personal level, I spent 20+ years in the U.S. Army so that one day I could pursue my "American Dream." I wanted to be a commercial fisherman, support our veterans, and contribute to my community. I have worked very hard my entire life, putting others needs before my own and sacrificing so that one day I could live my American Dream. I went to the Landing School to learn how work on boats, gave back to my community by serving as an Ed-Tech in the Biddeford School System, and have taken those that are terminally ill on their last fishing trip. I continue to serve my community in other ways after my military service. I am asking you to consider people like me that live and work in our community and I hope this letter is received with sincere empathy and compassion for the same.

Respectfully,

Ed McCaskey

ateasefishing@gmail.com

207-284-3168

May 19, 2025

City of Biddeford Officials,

My name is Carole Alexander, I feel compelled to weigh in regarding the pier which UNE plans to construct on the Saco River. My husband, Marshall Alexander, who is no longer with us, was a 78 year resident of Biddeford, starting his lifelong career in commercial fishing at the age of 14 (only to take a brief pause to serve in the United States Navy Submarine Service), founder of Biddeford Pool Mooring Services, an owner in Vessel Services (a dock side fuel and ice plant on the commercial fish pier in Portland, ME), and the previous Biddeford harbormaster for 37 years. I have heard about this UNE issue first hand many times in the past.

On or about August 2015, UNE presented a plan to my husband in his capacity of harbormaster and current harbormaster Paul Lariviere regarding UNE's interest in constructing a pier on the Saco River jutting approximately 140 feet into the river...and their plan to dock a 60-foot vessel at said pier. Marshall and Paul took our 21-foot Pointer to the location to check the feasibility and depth of water. Ultimately, they suggested a more desirable alternative site to UNE ... a little further down river with deeper water and parallel to shore. Their decision was based not only on the impact the UNE location would have infringing on the mooring field, but the severe impact on river navigation overall. Mind you, turning a 60-foot vessel in a mooring field with a narrow channel is not an easy feat. It requires an experienced mariner... which is why many harbors have a "pilot" to facilitate turning and docking large vessels in tight narrow waterways ... pilots who have a vast abundance of knowledge and expertise of the area... which is an entity that the Saco River has yet to need.

UNE's entire justification for presenting their original location to the Planning Board is apparently a 2016 unsubstantiated memo stating, "This is where the harbormaster told us to build it." Hmm, NO... I know that the alternate site chosen by Marshall and Paul is the site they suggested... Closer to shore, deeper water and less impact to the navigable waterway.

In order for UNE to get what they want... at all costs, the present harbormaster and assistant were silenced and their authority rescinded on the subject. Clearly it states in Biddeford's own Harbor Ordinance, Section 74-35b that no permit for a pier can be granted without approval of the Harbormaster.

In addition, the Corps follows certain criteria in the evaluation of every application they receive... including but not limited to:

The relative extent of the public and private need for the proposed activity.

The practicable use of reasonable alternative locations and methods to accomplish the objective of the proposed activity.

The extent and permanence of the proposed activity's beneficial and detrimental effects on the public and private uses to which the area is suited.

In summary, the harbormasters- past and present- have done their due diligence. They did not deny UNE the ability to construct a pier... rather they wanted it built in a slightly different location... parallel to shore with more water depth and less impact on the mooring field and navigable waterway. Marshall and Paul were both of the opinion that equal and fair access was important for ALL residents using the Saco River... not just UNE.

Respectfully submitted,

Carole Alexander

Carole Alexander

MEMO

TO:	Biddeford Planning Board
FROM:	UNE Pier Review, an informal collaboration of Biddeford & Saco residents
PRESENTED BY:	Kyle Noble, Biddeford resident and former City Councilor
DATE:	May 13, 2025
RE:	UNE's pier application to the Biddeford Planning Board

Executive Summary

UNE must prove the truth of their public statements about inadequate water depth at a suggested alternative location, a location they do not prefer. Without doing so, their application to the Biddeford Planning Board is incomplete.

Brief descriptions of Exhibits

1. Exhibit A --- Technical chart (unedited), submitted by GEI (UNE's paid consultant) to regulatory authorities.
2. Exhibit B --- A drone photo taken from 355 feet in the air.
3. Exhibit C --- The same drone photo, but with information superimposed.
4. Exhibit D --- The technical chart submitted by GEI, but with information superimposed.
5. Exhibit E --- A three-page PDF of a NOAA chart, Page 1 unedited, Pages 2 & 3 contain superimposed information.
6. Exhibit F --- A video of the former Saco Harbormaster, accompanied by a newspaper reporter, taking depth soundings along the shoreline of the Saco River. The location of the soundings is where UNE's attorney has alleged that water depth is insufficient to dock a 60-foot research vessel. A thumb drive with this video has been supplied to Biddeford's City Planner.

Introduction

Water depth at two spots on the Saco River is a central question in UNE's application to the Biddeford Planning Board for a new pier. In fact, there may be no more important issue. The disagreement about water depth at a suggested alternative location is perhaps *the* principal reason why City Staff deprived the Planning Board of the expertise that normally would have been provided by the Harbormaster or the Assistant Harbormaster.

The Harbormaster's contention that better water depth exists in a location other than what UNE wants led the University of New England to publicly mock local expertise. Their lawyer told the City Solicitor that the Harbormaster's suggestion for deeper water "makes no sense." From there they alleged bias, and on that basis the Harbormaster was muzzled.

Therefore, by using statements about inadequate water depth to exclude local expertise, UNE now must prove that those statements are *true*. If they fail to do so, the Planning Board doesn't have enough information to approve the application.

Legal intimidation to discourage factual review

In 2024, while threatening in to sue the City of Biddeford, UNE's attorney wrote that the Planning Board had previously "voted unanimously to approve UNE's Master Plan." He used this routine procedural checkpoint to conclude, "In other words, the location of the pier is a settled matter." (Letter to city attorney, Feb. 13, 2024)

The chairman of the Board at that time has confirmed that no detailed discussion of UNE's proposed pier location took place then, in 2016. It's his opinion that approval of a master plan simply confers a blessing on general concepts, not specific engineering proposals. That is normal procedure, giving the applicant a chance to outline a general plan early in the process, and giving the Board a chance to provide feedback early in the process. UNE's legal argument is that approval of a master plan nine years ago is an acceptable substitute for thorough review of pier location in the current proposal. That might be useful in threatening a lawsuit, but outside of that context it's absurd.

UNE didn't submit an application to the Planning Department until April of 2025. *This* Planning Board, the one currently seated, is the body that reviews the application. The university's threats to sue the City, if the pier location exactly as submitted is not approved, are inappropriate.

UNE's false claim

UNE participated in the process that led to a charge of bias against a City official and the exclusion of local expertise --- the outcome the university wanted. To help secure that result, UNE made a claim about inadequate water depth that is unambiguous, in letters to the City of Biddeford and as quoted in newspaper articles:

- "A pier hugging the shoreline would not reach deep enough water." (Portland Press Herald)
- A pier in the suggested alternative location "...would sit in water too shallow to use." (Letter to City)
- A pier in the suggested alternative location wouldn't work "given the depth of the water..." (Letter to City)
- "Our position is that the planned location of the GMSC Pier is a settled issue." (Letter to City)
- "We take the position that the GMSC Pier's location has already been approved and that any denial of the pier at Site 7 will be an illegal act." (Letter to City)
- The suggested alternative location "...makes no sense." (Letter to City)

As those statements make clear, UNE wants the Board to approve their preferred location as proposed, no questions asked. They expect you and Biddeford residents to believe --- without proof --- that those statements about inadequate water depth are true.

UNE engineer contradicts client

GEI is the engineering firm that will explain details of the application to the Board. On Nov. 28, 2023, GEI revealed in a memo that UNE's repeated claims about inadequate water depth at the suggested alternative location are flat-out wrong: *"The suggested alternative location does have greater depth at the main berth, approximately 11 to 12 feet at MLLW."*

It has to be one or the other. Either UNE is correct that a dock at the alternate location would "sit in water that is too shallow to use," or GEI is correct that plenty of deep water exists at the suggested alternative location.

Measurements prove GEI correct, UNE's statements false

In February of 2025, concerned parties consulted separately with two licensed civil engineers who don't work for GEI, used their guidance, and deployed to the site to take physical measurements and drone photographs. The measurements took place on Wednesday, Feb. 26, 2025, a day on which Mean Low Tide occurred at 4:01 p.m.

SHEET NO. B-001 (**Exhibit A**), a technical drawing produced by GEI for UNE and submitted to regulatory agencies, guided the taking of all measurements.

In the middle of SHEET NO. B-001, you can see that GEI drew a red line denoting MLLW in a NE direction, around "LEDGE," then for a very short distance in a SE direction, and then in an ENE direction before bathymetric gradient lines approaching the mouth of the river are discontinued.

Our team's first step was to consult with the non-GEI civil engineers, and to reach the conclusion that SHEET NO. B-001 is accurate. The next step was to deploy into the field to place a bright orange marker on the ledge. Next, using the scaling information provided on SHEET NO. B-001, to proceed along the bathymetric gradient line marked "0" by GEI, the mean low tide line. Along that line our team placed bright orange markers at 20-foot intervals.

The drone pilot then launched his camera to take a high resolution photo (**Exhibit B**) from approximately 355 feet up in the air. The photo was taken at precisely 3:37:10 p.m. on February 26, 2025, about 14 minutes before low tide. The drone photo (**Exhibit B**) is of a general area, an area that those who know the river very well have suggested has more than enough deep water to meet UNE's needs. Note the exceptional clarity of the photograph.

Photos don't lie

In **Exhibit C**, the alternative location that UNE does not want discussed is superimposed on the original drone photograph and labeled as "The Forbidden Zone." It's an area that measures approximately 190 feet by 20 feet. You can see the orange markers at 20-foot intervals along the "0-value" bathymetric gradient line, and a superimposed yellow line marking the Low Tide Line that day. A very striking element of this photograph is the very dark green area just a few footsteps to the north of the low tide line, with the dark green color clearly indicating deep water. You can't miss it.

Please refer back to SHEET NO. B-001 (**Exhibit A**). Just a few feet to the north of the "0" gradient line is the "-10" gradient line, indicating 10 feet of water at a very low tide. With stunning definition, the drone photograph and dark green area prove that there is ample deep water just a few feet away from the low tide line, and that GEI's SHEET NO. B-001 (**Exhibit A**) is accurate. Everything the UNE attorney has been claiming about inadequate water depth close to shore, in that location, is wrong. He has failed to discredit local expertise.

GEI accurately charts "smoking gun" depth marker

After taking the drone photograph and superimposing markings to define the zone that local experts have been forbidden to speak about, our team asked one of the non-GEI engineers to accurately superimpose the Forbidden Zone onto GEI's drawing, SHEET NO. B-001. This is **Exhibit D**. Please observe the "-10" gradient line, labeled as the Smoking Gun. This denotes 10 feet of water at Mean Low Tide, just a few feet from shore. The significance of the -10 gradient line is that once again GEI's own work, based on bathymetric surveys and confirmed by two other civil engineers, proves that ample depth does exist close to shore, *exactly* what local experts have been saying for more than a decade.

Further, SHEET NO. B-001 indicates approximately 2,660 sq. feet in total required for fixed and floating dock surfaces, as proposed by UNE. In **Exhibit D**, the "Forbidden Zone" at the suggested alternative location is 20 feet by 190 feet, approaching almost 4,000 sq. feet. That is ample room in which to design an adequate pier and docking system to meet research needs, a system that does not interfere with other mariners.

NOAA data doesn't lie

Supporting the GEI statement, GEI diagrams, and the drone photograph, and also directly contradicting UNE's attorney, is a chart produced by the Office of Coast Survey, a division of the National Oceanic and Atmospheric Administration (NOAA). The attached 3-page PDF, **Exhibit E**, clearly shows deep water swinging in very close to shore, at the proposed alternative location.

Depth finders don't lie

Saco's former Harbormaster (Dan Chadbourne) was also forbidden by his city manager from making any public comment about the suggested alternative location revealed in the drone photograph. Mr. Chadbourne served as Saco's Harbormaster for more than twenty years, and has a Master's License from the United States Coast Guard. (None of GEI's personnel hold that credential.) On October 25, 2024 a newspaper reporter accompanied Mr. Chadbourne as he took depth soundings in the Forbidden Zone. His findings confirm exactly what's seen in the drone photograph --- deep water --- and you can watch him calling out actual depth soundings in this video: https://youtu.be/gtwhDOmZTI4. We have submitted the video file on a thumb drive to Biddeford's City Planner as **Exhibit F**.

Further on-site investigation required

SHEET NO. B-001 is accurate, the Saco Harbormaster's depth soundings are accurate, the drone photograph is accurate, the NOAA chart is accurate, the Biddeford Harbormaster's observations about deep water have been accurate, and GEI was accurate when it wrote, *"The suggested alternative location does have greater depth at the main berth."* Unfortunately, 100% inaccurate are UNE's statements, part of the public record, that the suggested alternate location makes no sense because deep enough water close to shore does not exist.

Of grave concern is that the Board is presently handicapped by a glaring information deficit. You don't have what you need to approve the application that is in front of you. The silencing of the Harbormaster is history, and nothing can be done about that. Nevertheless, it's clear the city manager knew that as the Board does its work, it *still needs to be properly advised* by a professional with local knowledge. On May

22, 2024, he wrote: "*I will soon announce the appointment of a special 'Harbormaster Pro Tem' for the sole purpose of hearing and deciding on the anticipated application.*"

He never made any such appointment. Therefore, the application in its present form has never been professionally evaluated by someone who has deep and thorough knowledge of that part of the Saco River. UNE is demanding that the Board approve its application while deprived of the invaluable contribution of local expertise.

Conclusion

UNE is an asset to the City of Biddeford. Local residents have been unified in stating that UNE should have a new research pier to support their marine sciences center. Our memo is not an effort to prevent UNE from having a much-needed research pier. Nor are we even remotely attempting to design what UNE's pier "should" look like.

What we *are* asking is that the pier be built in the right place. That's why we hope for proper regulatory process from local officials, because state and federal regulatory agencies have utterly failed to ask the right questions. Important expertise has been forcibly excluded from the discussion. Now, very late in the game, only the Biddeford Planning Board can insist upon an open and transparent process that requires the scientific data necessary to site the pier in the best possible location.

One thing is obvious. Until UNE supplies data proving the truth of its statements about inadequate water depth at the suggested alternative location, the application remains incomplete.

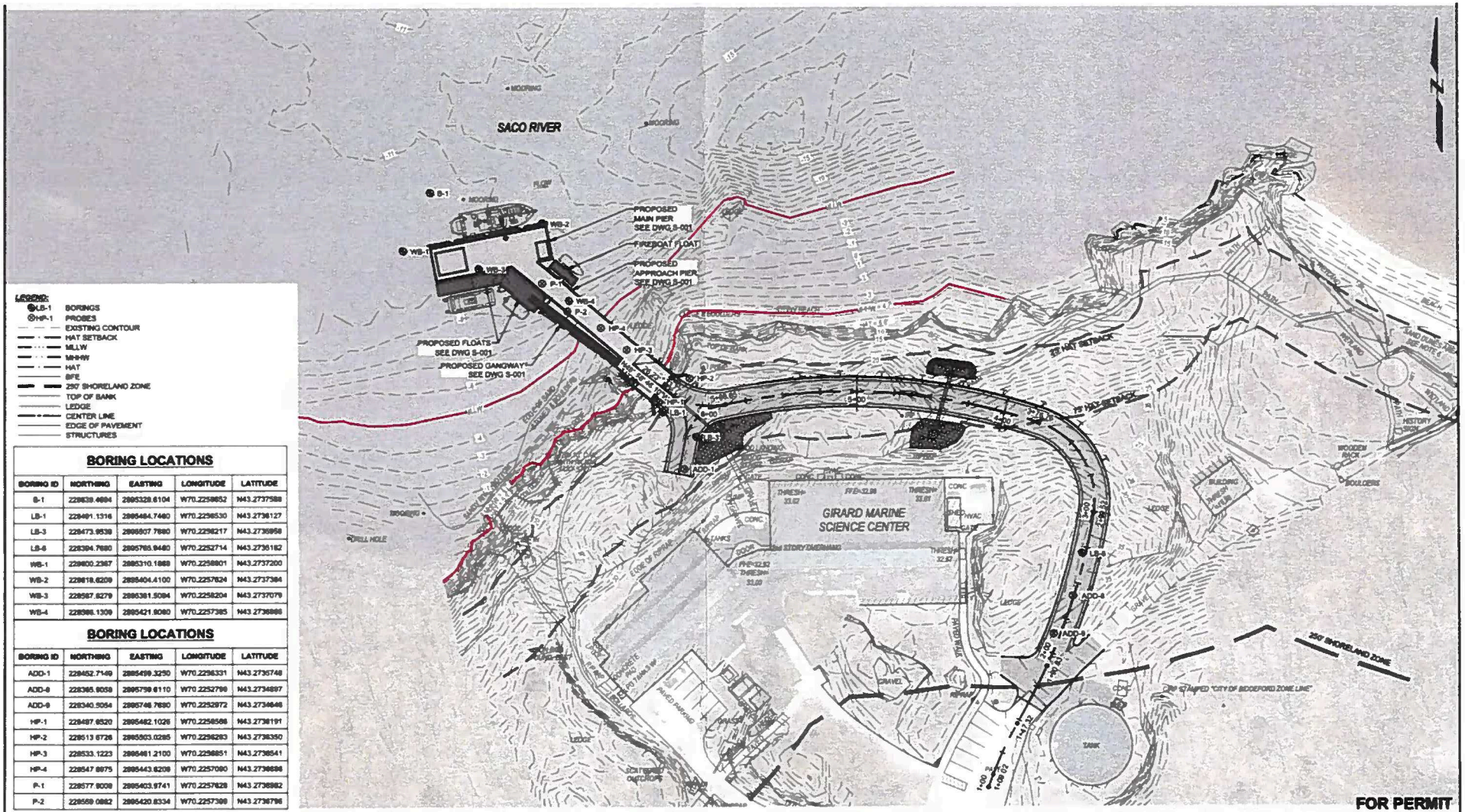

LEGEND:

- LB-1 BORINGS
- HP-1 PROBES
- EXISTING CONTOUR
- HAT SETBACK
- MLLW
- MHHW
- HAT
- BFE
- 250' SHORELAND ZONE
- TOP OF BANK
- LEDGE
- CENTER LINE
- EDGE OF PAVEMENT
- STRUCTURES

BORING LOCATIONS

BORING ID	NORTHING	EASTING	LONGITUDE	LATITUDE
B-1	228839.4694	2895328.6104	W70.2258652	N43.2737588
LB-1	228491.1316	2895484.7460	W70.2258530	N43.2736127
LB-3	228473.9539	2895507.7680	W70.2258217	N43.2735958
LB-6	228394.7680	2895765.9480	W70.2252714	N43.2735182
WB-1	228600.2367	2895310.1868	W70.2258801	N43.2737200
WB-2	228618.6209	2895404.4100	W70.2257624	N43.2737384
WB-3	228567.8279	2895361.5094	W70.2258204	N43.2737079
WB-4	228566.1309	2895421.9080	W70.2257385	N43.2736866

BORING LOCATIONS

BORING ID	NORTHING	EASTING	LONGITUDE	LATITUDE
ADD-1	228452.7149	2895499.3250	W70.2256331	N43.2735748
ADD-6	228365.9058	2895759.6110	W70.2252799	N43.2734897
ADD-9	228340.5054	2895746.7680	W70.2252972	N43.2734646
HP-1	228487.6520	2895482.1026	W70.2256566	N43.2736191
HP-2	228513.6726	2895503.0285	W70.2256263	N43.2736350
HP-3	228533.1223	2895461.2100	W70.2256851	N43.2736541
HP-4	228547.8975	2895443.6209	W70.2257090	N43.2736686
P-1	228577.9008	2895403.9741	W70.2257628	N43.2736982
P-2	228559.0882	2895420.8334	W70.2257399	N43.2736796

ELEVATION	MLLW	NAVD88*
BFE	+19.0	+14.0
HAT	+11.6	+6.6
MHHW	+9.7	+4.7
MHW	+9.3	+4.3
MSL	+4.8	-0.2
MLW	+0.3	-4.7
MLLW	0.0	-5.0

*PROJECT DATUM

0 30 60
SCALE, FEET

Attention:
0 1"
If this scale bar does not measure 1" then drawing is not original scale.

STATE OF MAINE
DANIEL J. GAMON
April 22, 2024

Designed:	DJB
Drawn:	JAM
Checked:	BJB
Approved:	BMM
P.E. No:	13033
GEI Project	2203703

GEI Consultants
GEI CONSULTANTS, INC.
5 MILK STREET
PORTLAND, ME 04101
(207)797-8881

UNE
UNIVERSITY OF NEW ENGLAND
11 HILLS BEACH RD.
BIDDEFORD, MAINE

UNIVERSITY OF NEW ENGLAND MARINE SCIENCE CENTER PIER
11 HILLS BEACH ROAD
BIDDEFORD, YORK COUNTY, MAINE

NO	DATE	ISSUE/REVISION	APP
4	9/14/2023	DEP PERMIT SET	DJB
3	6/28/2023	75% DESIGN SUBMISSION	DJB
2	2/15/2023	30% DESIGN SUBMISSION	DJB
1	12/9/2022	15% DESIGN SUBMISSIONREV	DJB
0	11/11/2022	15% DESIGN SUBMISSION	DJB

SHEET NAME: BORING LOCATION PLAN

SHEET NO.: B-001

FOR PERMIT


0'
100'
DATE-TIME: 02/26/2025 - 03:47:10 PM
MLT (Mean Low Tide) @ 4:01 PM
FORBIDDEN ZONE
MLT TIDE LINE

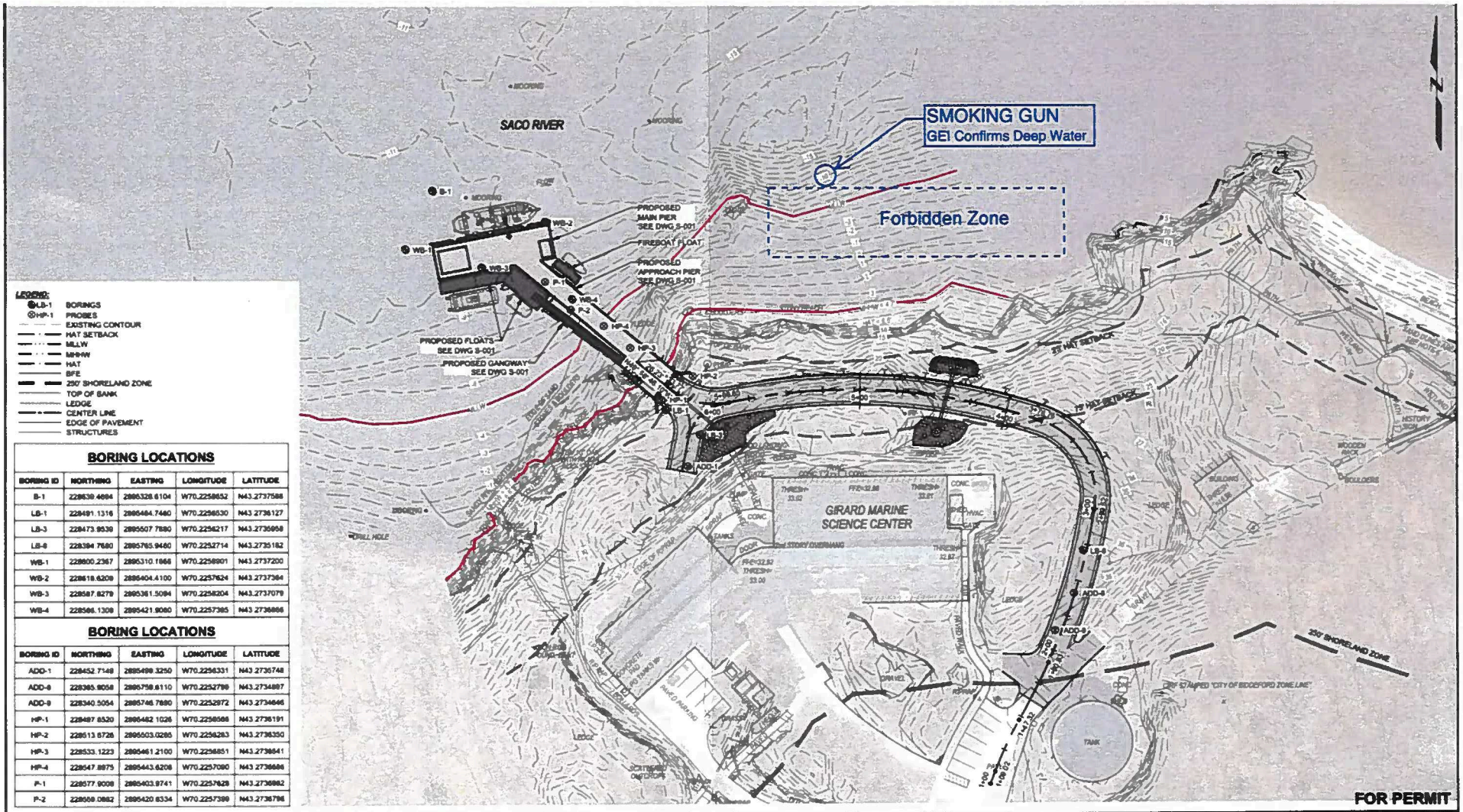

LEGEND:

- LB-1 BORINGS
- HP-1 PROBES
- EXISTING CONTOUR
- HAT SETBACK
- MLLW
- MHHW
- HAT
- BFE
- 250' SHORELAND ZONE
- TOP OF BANK
- LEDGE
- CENTER LINE
- EDGE OF PAVEMENT
- STRUCTURES

BORING LOCATIONS

BORING ID	NORTHING	EASTING	LONGITUDE	LATITUDE
B-1	228639.4694	2895328.6104	W70.2258652	N43.2737588
LB-1	228491.1316	2895484.7460	W70.2256530	N43.2736127
LB-3	228473.9539	2895507.7880	W70.2256217	N43.2735958
LB-8	228394.7680	2895765.9460	W70.2252714	N43.2735182
WB-1	228600.2367	2895310.1866	W70.2258901	N43.2737200
WB-2	228618.6209	2895404.4100	W70.2257624	N43.2737364
WB-3	228587.8279	2895361.5094	W70.2258204	N43.2737079
WB-4	228566.1309	2895421.9060	W70.2257385	N43.2736866

BORING LOCATIONS

BORING ID	NORTHING	EASTING	LONGITUDE	LATITUDE
ADD-1	228452.7148	2895499.3250	W70.2256331	N43.2735748
ADD-8	228365.9058	2895759.6110	W70.2252799	N43.2734897
ADD-9	228340.5054	2895746.7690	W70.2252972	N43.2734646
HP-1	228497.8520	2895482.1026	W70.2256566	N43.2736191
HP-2	228513.8726	2895503.0285	W70.2256283	N43.2736350
HP-3	228533.1223	2895461.2100	W70.2256851	N43.2736541
HP-4	228547.8975	2895443.6208	W70.2257090	N43.2736686
P-1	228577.9008	2895403.9741	W70.2257628	N43.2736982
P-2	228559.0882	2895420.8334	W70.2257399	N43.2736796

ELEVATION	MLLW	NAVD88*
BFE	+19.0	+14.0
HAT	+11.6	+6.6
MHHW	+9.7	+4.7
MHW	+9.3	+4.3
MSL	+4.8	-0.2
MLW	+0.3	-4.7
MLLW	0.0	-5.0

*PROJECT DATUM

0 30 60
SCALE, FEET

Attention:
If this scale bar does not measure 1" then drawing is not original scale.

STATE OF MAINE
DANIEL J. DAMON
April 22, 2024

Designed:	DJB
Drawn:	JAM
Checked:	BJB
Approved:	BMM
P.E. No:	13033
GEI Project	2303703

GEI Consultants
MID COMBIA SAINTS, INC
5 MILK STREET
PORTLAND, ME 04101
(207)797-4661

UNE
UNIVERSITY OF NEW ENGLAND
11 HILLS BEACH RD.
BIDDEFORD, MAINE

UNIVERSITY OF NEW ENGLAND MARINE SCIENCE CENTER PIER
11 HILLS BEACH ROAD
BIDDEFORD, YORK COUNTY, MAINE

NO	DATE	ISSUE/REVISION	APP
4	9/14/2023	DEP PERMIT SET	DJB
3	6/28/2023	75% DESIGN SUBMISSION	DJB
2	2/15/2023	30% DESIGN SUBMISSION	DJB
1	12/9/2022	15% DESIGN SUBMISSION/REV	DJB
0	11/11/2022	15% DESIGN SUBMISSION	DJB

SHEET NAME: **BORING LOCATION PLAN**

SHEET NO.: **B-001**

Office of Coast Survey
National Oceanic and Atmospheric Administration
U.S. Department of Commerce

Page 1 of 3 pages

NOAA Custom Chart Version 3.0
Choose your own chart scale and location
Save charts to a personal chart catalog

Help & Feedback

Guides | Feedback | What's New

Use these links to open the two-page Quick Start Guide or the detailed-instructions in the User Guide. U.S. Chart No. 1 describes the meaning of symbols used on nautical charts.

- Quick Start Guide
- User Guide
- "Using NOAA Custom Chart" Video Transcript
- "Updating Custom Charts" Video Transcript
- Legend (U.S. Chart No. 1)
- NOAA Custom Chart PDF Printing

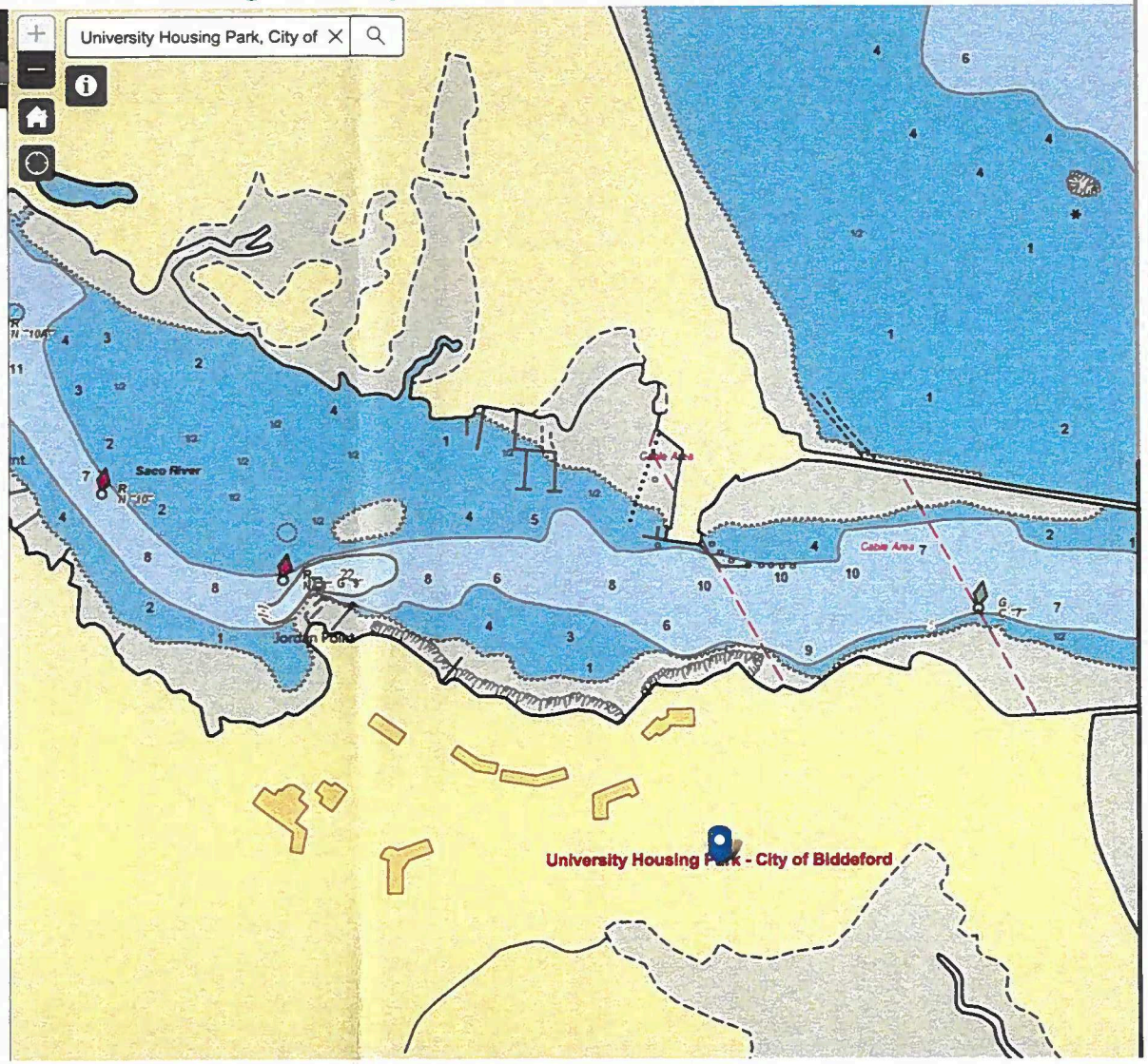

Page 2 of 3 Pages

General Vicinity

- UNE proposed location
- Suggested alternative location

See Next Page

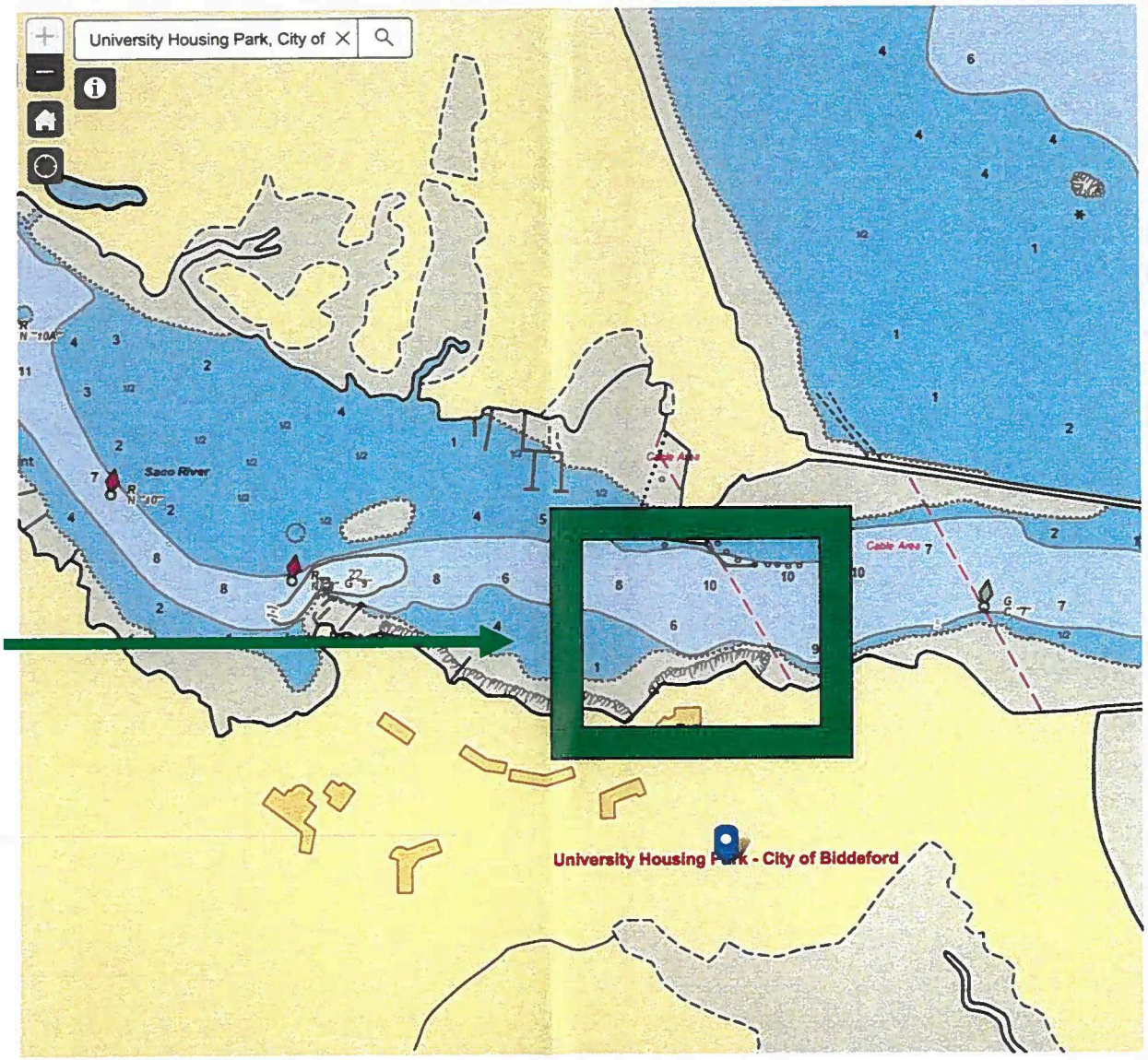

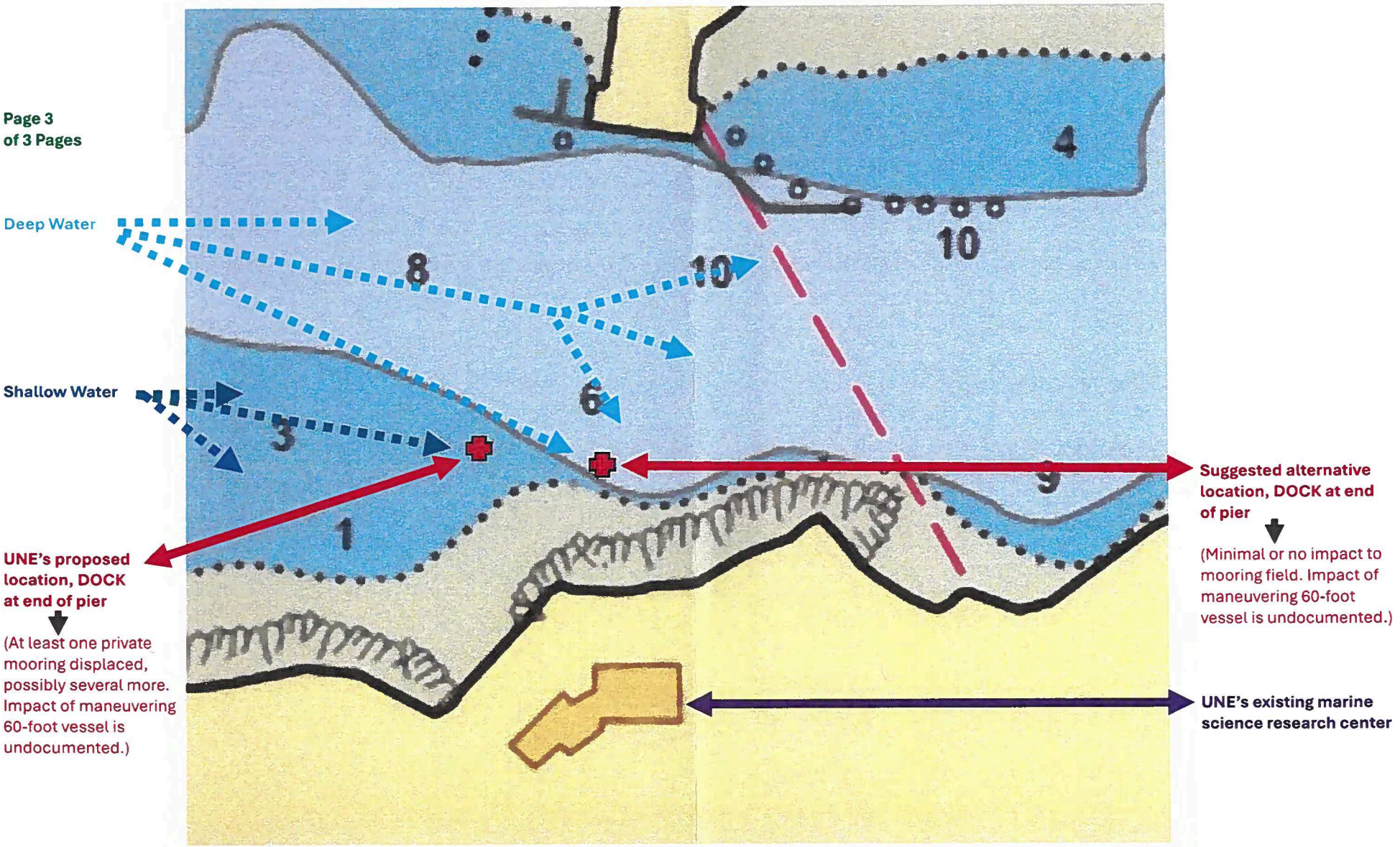
Deep Water
Shallow Water
4
10
8
10
6
3
1
9
UNE's proposed location, DOCK at end of pier
(At least one private mooring displaced, possibly several more. Impact of maneuvering 60-foot vessel is undocumented.)
Suggested alternative location, DOCK at end of pier
(Minimal or no impact to mooring field. Impact of maneuvering 60-foot vessel is undocumented.)
UNE's existing marine science research center

Whitten, Nan

From: Hills Beach John <hillsbeachjohn@yahoo.com>
Sent: Tuesday, May 13, 2025 9:22 AM
To: jherbert1@une.edu
Cc: Randy Seaver; srichelieu@metln.org; newsdesk@sacobaynews.com; Whitten, Nan; Galbraith, David; Planning Board
Subject: in search of transparency
Attachments: Question 10.pdf

Caution: This is an external email. Please take care when clicking links or opening attachments. When in doubt, contact the IT Department

Dear President Herbert,

I'd like to respectfully renew my request that UNE release a copy of the application it filed with NIST, in time for the Biddeford Planning Board meeting next Wednesday, May 21.

In January I wrote an email to you asking that UNE release an exact copy of the application that was filed with NIST. You didn't reply to my email. Our reason for asking was that in the NIST application, UNE may have made representations about the local, state and federal permitting process. Since the taxpayers will foot the bill for your $3.5 million grant, your NIST application should be available for public inspection. Certainly the Biddeford Planning Board deserves the chance to review it.

The informal community coalition "UNE Pier Review" is conducting an online survey that asks this question: "*To help build the pier, UNE applied for and won a $3.5 million grant from the National Institute of Science & Technology (NIST). UNE's president was asked to release a copy of the NIST application, but he refused. Does this affect your attitude about UNE?*"

We don't claim that the survey is scientific. It has run for two weeks among Facebook users in Biddeford and within a 10 mile radius. UNE Pier Review is not making any claims based on the results, but the fact is that people are answering the question. The results so far for Question 10 are attached, for you to use or discard as you see fit.

UNE presents its sketch plan to the Biddeford Planning Board, at 6:00 p.m. on Wednesday, May 21, 2025. The NIST application has no national security concerns attached to it. Last July your PR person told the Press Herald, "UNE has proceeded in good faith and with full transparency." Release of the application would be helpful to the Biddeford Planning Board, and for that reason it seems prudent to release it in advance of next Wednesday night's meeting. Thank you very much.

Sincerely,

John Schafer

Whitten, Nan

From: Hills Beach John <hillsbeachjohn@yahoo.com>
Sent: Saturday, May 10, 2025 12:08 PM
To: Planning Board
Subject: Fw: We've decided not to file FOAA requests

Caution: This is an external email. Please take care when clicking links or opening attachments. When in doubt, contact the IT Department

----- Forwarded Message -----
From: Hills Beach John <hillsbeachjohn@yahoo.com>
To: Danica Lamontagne <danica.lamontagne@biddefordmaine.org>; Nan Whitten <nan.whitten@biddefordmaine.org>; David Galbraith <david.galbraith@biddefordmaine.org>
Cc: Randy Seaver <randyseaver01@gmail.com>; srichelieu@metln.org <srichelieu@metln.org>; newsdesk@sacobaynews.com <newsdesk@sacobaynews.com>
Sent: Saturday, May 10, 2025 at 11:58:57 AM EDT
Subject: We've decided not to file FOAA requests

From: Lamontagne, Danica <danica.lamontagne@biddefordmaine.org>
Sent: Thursday, April 10, 2025 at 12:13:26 PM EDT
Subject: FW: UNE Research Dock e FW: A request for notification

Your email was forwarded to me as I am the City's Public Access Officer for Freedom of Access Act requests...Maine's Freedom of Access Act (FOAA) does not require public agencies to honor "standing requests" for information...Based on the guidance provided by the State of Maine and a review by our City Solicitor, I must deny your request to be copied on all communications by the Planning Department and the University of New England....

Hi Danica, first I'd like to make clear that I know this decision did not come from you. You were simply following instructions to relay the bad news.

Second, given the history of non-transparency about UNE's pier application by various government officials at the local, state and federal levels, it's my personal opinion that this was an unwise decision by whomever made it. Although the law does "not require" City Hall to comply with the request, it would have been a routine and painless task to complete and would have been an easy way to encourage an atmosphere of transparency and civility.

Last but not least, I have discussed the City's decision with the coalition of Biddeford residents that is concerned about UNE's pier application. While we appreciate your helpful

information about filing FOAA requests, we have decided not to do so. There are three reasons for that. It's an expense to the taxpayers to have the City Solicitor review each and every request. Also, my recent meeting with Mayor Grohman and Attorney Center, to which the press was invited, was a positive event that advanced transparency and civility. Most important, we are confident that the Biddeford Planning Board will accept and fairly consider all input from citizens as it reviews the UNE application.

At this time we have decided not to file any FOAA requests, and thank you for your professionalism in replying promptly.

Respectfully,

John Schafer

THE BIDDEFORD GAZETTE

News | Opinion | Resources for Biddeford Maine

Mayor defends city review of UNE pier proposal

MAY 5, 2025MAY 5, 2025 ~ RANDY SEAVER

During a sometimes terse and heated meeting, Biddeford Mayor Marty Grohman defended the way the city has acted during the review of a controversial pier that the University of New England wants to construct on the Saco River.

The nearly hour-long meeting was held at the request of John Schafer, the former chair of the Biddeford Harbor Commission and a Hills Beach resident who has been outspoken about the need for transparency during the review process.

City Attorney Harry Center also took part in the late Monday morning meeting in Grohman's second-floor office at City Hall.

Center stressed that the meeting was a strictly informal and not part of the review process. "The mayor has simply set aside some time to listen to the concerns of a constituent," he said.

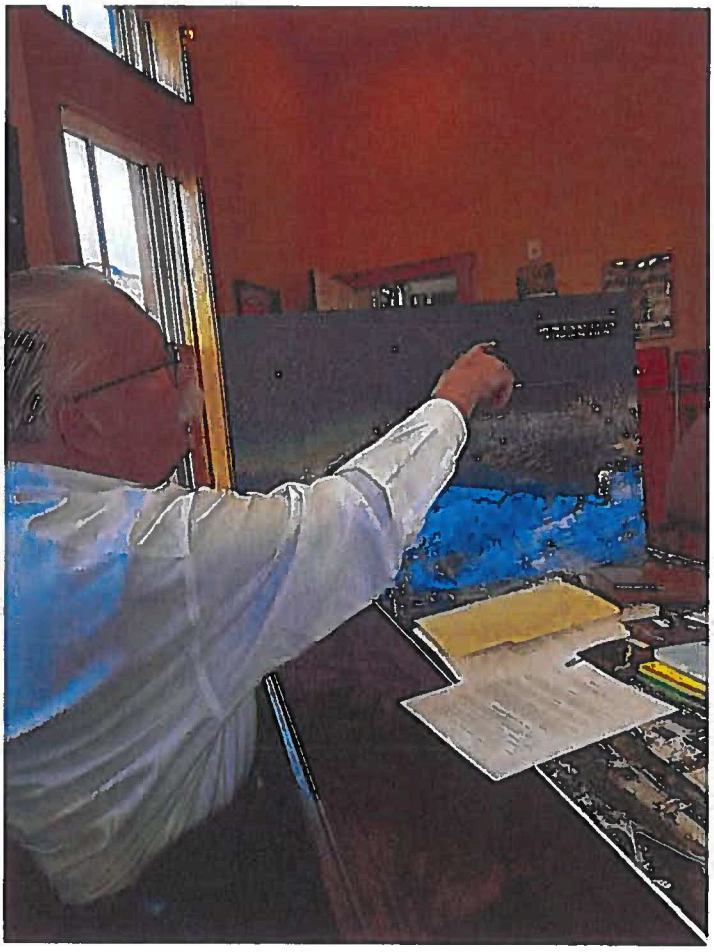

Hills Beach resident and former chair of Biddeford's Harbor Commission John Schafer points to a diagram that shows inadequate depth where UNE is hoping to build a 177-foot pier to dock its research vessel near the mouth of the Saco River (Seaver photo)

No one from the university was at the meeting, and other media outlets declined invitations to attend, according to Schafer.

Schafer's concerns center on three essential points: the impact and necessary removal of at least seven private moorings on the river if the project is approved; concerns about the water depth where the university wants to construct its pier; and the process that has been used to review the university's proposal.

The permitting process for the proposed pier is complex and multi-layered, requiring the review and approval by several state, federal and local agencies.

Earlier this year, UNE cleared two major hurdles in the review process, winning approval from both the Saco River Corridor Commission and the U.S. Army Corps of Engineers.

But a very critical part of the review process is expected to begin in just a few weeks when the Biddeford Planning Board begins its formal review of the proposal.

"I don't have any say over what the Planning Board does or doesn't do," Grohman said during Monday's meeting. "I simply appoint members, and those appointments are then confirmed by the council. I think we have a really good planning board, and I have full confidence in them."

But Schafer said he is concerned about the lack of public input during the review process and how the city has approached the project thus far. He also criticized the university for its "lack of transparency" and for "bullying those who raise questions and concerns" about the proposed pier.

"I think [UNE's] application is both incomplete and full of misinformation," Schafer told the mayor. "Don't you think it's a bit presumptuous for a private entity to dictate how the city will review its application; to show no regard for those who have private moorings in that area just so they can construct a vanity pier?"

When contacted by the Biddeford Gazette, a university spokesperson declined an opportunity to address Schafer's remarks.

"Since this was not an open meeting and a representative from UNE was not present, it would not be appropriate to comment on the conversation that took place," wrote Sarah Delage in an email response. "UNE will continue to follow the public regulatory process, and we look forward to presenting our application to the Planning Board."

Schafer said he and "a growing coalition of residents" have no problem with the university building a pier to dock its 60-foot research vessel. Instead, he says, all the concerns boil down to the exact location of the pier and the dismissal of public concerns about the project.

Survey says?

Schafer roundly criticized Grohman for allowing former City Manager James Bennett to "silence" the city's harbormaster and assistant harbormaster last year, preventing them from participating in the city's review of the proposal simply because they voiced concerns about the pier's location.

But Grohman shot back and said Bennett was simply trying to avoid the appearance of bias. He also reminded Schafer that the harbormaster's role – as outlined in city ordinances – is strictly an "advisory position," a change that was first proposed by Schafer himself last year when he was chair of the harbor commission.

Schafer said a growing number of residents have serious concerns about a review process that seems to have a pre-ordained outcome, pointing to the results and comments found in a recent public survey about the project.

Nearly 40 percent of respondents indicated that they had a "very low" level of confidence in the city's handling of the review process, while roughly 30 percent of respondents indicated that they had "moderately low" confidence in the city's handling of the matter.

The online survey was conducted over several days in late April on a Facebook page called "UNE Pier Review," a group that Schafer has helped organize.

The survey asked respondents a wide range of questions about the proposed pier and the review process thus far. The survey allowed respondents to maintain their anonymity.

The multi-question survey included feedback from 156 respondents, showing an overwhelming lack of public confidence on the issues of transparency and the mayor's handling of the issue.

Nearly 40 percent of respondents indicated that they had "very low" level of confidence in the city's handling of the review process. And roughly 30 percent of respondents indicated that they had "moderately low" confidence in the city's handling of the matter.

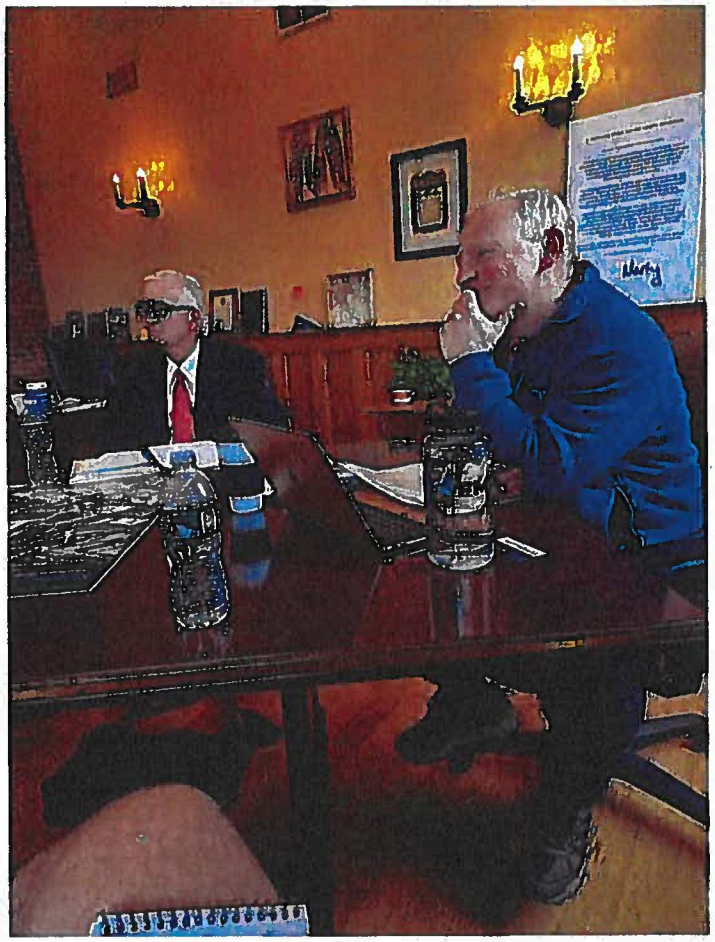

City
Attorney
Harry
Center
(left) and
Mayor
Marty
Grohman
listen as
John
Schafer
details
his
concerns
about
UNE's
proposal

Fewer than 10 percent of respondents indicated that they had "very high" confidence in the process, while slightly less than 20 percent of respondents indicated that they are not sure.

Many respondents added comments saying the city has been "too secretive" while other questioned the motives of city officials, speculating that some members of the city seem to have a "cozy relationship" with the university.

Grohman described the survey as "interesting," but also said it was not a professional survey conducted by a polling firm.

"An anonymous survey is not something that a public permitting process could use, as it does not include an opportunity for all parties involved to publicly comment," Grohman wrote in a text message to the Gazette after the meeting.

Schafer told the mayor that several mooring owners have already written to regulatory authorities stating quite plainly that they have "no intentions of moving their moorings where UNE wants to build their pier."

Schafer also said that UNE has threatened the city with litigation if its desired location for the pier is not approved, referencing a letter sent to the city by Ron Schneider, the university's lead attorney, several months before the university had submitted its application for review.

Grohman described Schafer as a good friend, and said he was happy to hear the concerns that were raised.

In a moment of levity during the meeting, Grohman pointed out that the mayor does not vote on or control the regulatory review process. "I don't have the authority to change what sodas are sold in the vending machines downstairs," Grohman laughed.

After the meeting Schafer said he very much appreciated the opportunity to share his concerns with the mayor. "Nothing in the meeting surprised me," he said. "It's about what I expected."

Never miss another update! Subscribe for free today!
POSTED IN ARCHIVES, BIDDEFORD NEWS, UPDATES
BIDDEFORD BIDDEFORD NEWS HARRY CENTER JOHN SCHAFER MAINE MARTY GROHMAN RANDY SEAVER SARAH DELAGE UNE UNE PIER UNIVERSITY OF NEW ENGLAND



Published by Randy Seaver

Randy Seaver is a cranky, nearly insufferable malcontent living in Biddeford. He is a retired newspaper editor and the principal of a small strategic communications consulting firm. He may be contacted at randy@randyseaver.com *View all posts by Randy Seaver*

BLOG AT WORDPRESS.COM.

Whitten, Nan

From:	Hills Beach John <hillsbeachjohn@yahoo.com>
Sent:	Tuesday, May 6, 2025 8:34 AM
To:	Grohman, Martin; Center, Harry
Cc:	Phinney, Brian; Galbraith, David; LaFountain, Liam; Lessard, Marc; Gross, Neva; Belanger, Norman; Planning Board; Fecteau, Roby; Beaupre, Rogerp; Whiting, Scott; Macneill, Shelly; Emhiser, William; Whitten, Nan; Lamontagne, Danica; Randy Seaver; srichelieu@metln.org; newsdesk@sacobaynews.com; Mark Robinson; cpendle5 @gmail.com
Subject:	It was a good day for transparency

Caution: This is an external email. Please take care when clicking links or opening attachments. When in doubt, contact the IT Department

Dear Mr. Mayor,

After yesterday's meeting with you and Attorney Center, I'd like to withdraw my request of April 5 that the City reach out to UNE president James Herbert and ask him to release the application that it filed with NIST. He has already refused once, and Senator Collins' office purposefully hid the ball when I asked them for NIST contact information. I've made my point --- clearly, they will go to whatever lengths are at their disposal to keep the public from knowing what's in that application. Further pursuit would be unproductive busywork for the City.

Also, I do have faith that the Biddeford Planning Board will accept and respect input from citizens, unlike the DEP, the U.S. Army Corps of Engineers, and others.

Most important, I'm very encouraged by yesterday's meeting with you and Mr. Center. Thank you for inviting me to the meeting, and for keeping the door open to the Biddeford Gazette, the Courier, and the Saco Bay News. All that I and my neighbors have been seeking in the last year is that somebody shine a light on the important nuances of this application. Public input is to be welcomed, not feared, and yesterday's meeting was an encouraging chapter of openness and transparency.

Thank you again for your hospitality.

John Schafer

Whitten, Nan

From: Hills Beach John <hillsbeachjohn@yahoo.com>
Sent: Tuesday, April 29, 2025 8:55 AM
To: Lamontagne, Danica
Cc: Galbraith, David; Whitten, Nan; srichelieu@metln.org; Randy Seaver; newsdesk@sacobaynews.com; dmendros@metln.org; editor@inthecourier.com; erussell@pressherald.com; ggraham@pressherald.com
Subject: Re: UNE Research Dock e FW: A request for notification

Caution: This is an external email. Please take care when clicking links or opening attachments. When in doubt, contact the IT Department

Good morning, Danica.

On April 9 I wrote to the City Manager and requested to be copied on email traffic, going forward, between UNE and the City as the pier application makes its way through the Planning Board process. I am confirming that I received your email on April 10 denying the request. I also understand that the reason you were asked to give me is that such a courtesy is not required by law. Thank you for making the effort to reply.

On the same topic of transparency, you may know that I wrote to the Mayor, the City Manager, and the City Council on April 5. I suggested, in the interests of openness and transparency, that the City contact the president of the University of New England and ask him to voluntarily release a copy of the application that UNE had submitted to NIST to secure $3.5 million in taxpayer funding. It is a public document not subject to national security concerns.

When I didn't get an answer, I re-submitted the request on April 16. It is now two weeks later and still no reply.

I believe my request, both times, was respectful and uncomplicated. Can you confirm for me that in advance of Planning Board review, the Mayor and municipal leaders have decided they will not ask UNE to make the NIST application public?

Thank you for your time and your professionalism.

Respectfully,

John

On Thursday, April 10, 2025 at 12:13:26 PM EDT, Lamontagne, Danica <danica.lamontagne@biddefordmaine.org> wrote:

Good afternoon John,

Your email was forwarded to me as I am the City's Public Access Officer for Freedom of Access Act requests.

Maine's Freedom of Access Act (FOAA) does not require public agencies to honor "standing requests" for information, such as a request for a document to be sent when it is published or to be copied on ongoing communications. Per the Maine FOAA website, "Persons seeking to inspect or obtain copies of public records on a continuing basis are required to make a new request for any additional records sought after the date of the original request."

Based on the guidance provided by the State of Maine and a review by our City Solicitor, I must deny your request to be copied on all communications by the Planning Department and the University of New England. However, you may submit future FOAA requests for these communications. If a request is received once the communications already exist, they would be made available (subject to any applicable exemptions and/or fees).

For your convenience, we have an online request form for records requests, or you may send me an email directly with your request.

Thank you,

Danica Lamontagne

City of Biddeford

Asst. to the City Manager

danica.lamontagne@biddefordmaine.org

207-282-8423

Follow us: Facebook | Instagram

Please note our Business Hours:

Monday & Tuesday: 7 AM – 5 PM, Wednesday & Thursday: 8 AM – 4 PM

From: Hills Beach John <hillsbeachjohn@yahoo.com>
Sent: Wednesday, April 9, 2025 12:15 PM
To: Phinney, Brian <Brian.Phinney@Biddefordmaine.org>
Cc: Galbraith, David <David.Galbraith@biddefordmaine.org>; Planning Board <planningboard@biddefordmaine.org>; Whitten, Nan <Nan.Whitten@Biddefordmaine.org>; Macneill, Shelly <shelly.macneill@biddefordmaine.org>
Subject: A request for notification

Caution: This is an external email. Please take care when clicking links or opening attachments. When in doubt, contact the IT Department

Good morning, Brian. Love the work you are doing on behalf of the City. I know it's not an easy time, and we are lucky to have had you available and willing to step into the breach.

As far as the UNE pier is concerned, am I correct in assuming that the application has not yet been scheduled for a Planning Board agenda? Also, I won't belabor the point, but due to "unique" circumstances, Planning Board review will be the one and only time during which those with local knowledge of how the river flows will be able to provide their input to a regulatory body. Essentially, Planning Board proceedings will be the only chance for Biddeford citizens to actually be represented.

For that reason, may I ask that you ensure that I be copied from this point on to all future communications between the Planning Department and UNE, and vice versa, in regard to the application for a new marine sciences research pier? If I could also be notified as to when this application is first scheduled onto a Planning Board agenda, that would be great. I look forward to your reply, and thank you very much.

Sincerely,

John

Whitten, Nan

From: Pier Review <unepierreview@yahoo.com>
Sent: Saturday, April 26, 2025 10:30 AM
To: attorney.general@maine.gov
Cc: Grohman, Martin
Subject: UNE pier: Biddeford & Feds pile on more secrecy
Attachments: UNE Pier Secrecy.pdf

Caution: This is an external email. Please take care when clicking links or opening attachments. When in doubt, contact the IT Department

UNE pier: Biddeford & Feds pile on more secrecy

Fresh refusals to reply, another denial of requested information

(Biddeford, Maine) As the University of New England (UNE) gets closer to seeking approval from the Biddeford Planning Board for a new pier on the Saco River, the City of Biddeford has refused a request by coastal residents to be copied on communications between the municipality and UNE.

The former Chair of Biddeford's Harbor Commission had asked the city manager to be copied on emails about the proposed pier from April 9th of this year onward, as the application goes through planning board review. Danica Lamontagne, assistant to the city manager, responded that "I must deny your request" and cited the technicality that Biddeford is not legally required to honor it.

"They lawyered up," said John Schafer, the former Chair of the Harbor Commission who resigned his position last year to seek more transparency in the UNE pier review process. "Wrong choice."

In late March the U.S. Army Corps of Engineers notified Biddeford and Saco residents that all public suggestions, videos and comments submitted about the application had been ignored. The Corps' project manager cited a bureaucratic technicality that allowed the agency to freeze out public input.

In January UNE's president was asked to release a copy of the grant application the university filed with the National Institute of Standards & Technology (NIST). He did not reply. When U.S. Sen. Collins was asked for proper contact information at NIST so that a FOIA request could be filed to obtain a copy of the application, she refused to provide it. Once NIST confirmed that the application is a public document and not protected due to national security concerns, Schafer twice asked Biddeford officials to prevail upon UNE's president to release the NIST application before the planning board begins its review. The City chose not to reply.

Recently, U.S. Sen Collins, U.S. Sen King, and U.S. Rep. Pingree have been asked three times to detail how much of a federal $3.5 million grant of taxpayer funding to help build the pier is earmarked for administering the grant --- money that goes into UNE's pocket. All members of Maine's federal delegation have refused to answer.

Last year, Saco's harbormaster and Biddeford's harbormaster were forbidden to make any comment about the application. Schafer said he has assembled a long list of similar incidents (PDF attached)

that demonstrate a clear pattern of local, state and federal officials trying to prevent the public from knowing key details of UNE's proposed pier.

"All of them have clammed up and clamped down," Schafer said. "Information is being withheld from the taxpayers, and that's by design. What we don't know is why."

- UNE Pier Review on Facebook: https://www.facebook.com/profile.php?id=615617173447 61

---END---

Whitten, Nan

From: Hills Beach John <hillsbeachjohn@yahoo.com>
Sent: Wednesday, April 16, 2025 7:57 AM
To: Grohman, Martin; Phinney, Brian; LaFountain, Liam; Lessard, Marc; Ortiz, Doris; Emhiser, William; Whiting, Scott; Beaupre, Roger; Gross, Neva; dylyan.doughty@biddefordmaine.org; Belanger, Norman; Planning Board; Center, Harry
Cc: Randy Seaver; newsdesk@sacobaynews.com; ggraham@pressherald.com; srichelieu@meltn.org; dmendros@meltn.org; cfox@meltn.org
Subject: Re: A request to assist Biddeford citizens

Caution: This is an external email. Please take care when clicking links or opening attachments. When in doubt, contact the IT Department

Good morning. I have not received a reply to my April 5 email. Last night I watched the City Manager's Report, Council Updates, and President & Mayor Addressing the Council --- no mention of the request.

I believe my request was respectful and uncomplicated, and I would like to renew it. Thank you for your time and attention.

JS

On Saturday, April 5, 2025 at 09:20:13 AM EDT, Hills Beach John <hillsbeachjohn@yahoo.com> wrote:

Dear Council, Mayor Grohman & Mr. Phinney,

Despite an effort by Senator Susan Collins' office to prevent me from doing so, I filed a FOIA request about the UNE pier with the National Institute of Standards and Technology (NIST). I'm pleased to report that the agency notified me recently that the request is able to move forward --- it is not denied due to national security concerns or any of the other "exceptions" that could theoretically apply. Yes, it turns out the application that UNE filed with NIST in order to secure $3.5 million in taxpayer funds is indeed a public document.

In January, I wrote to the president of UNE, James Herbert, and asked him to proactively release the application that the university filed with NIST. He ignored me.

I asked because most likely the NIST application includes representations about pier location and the process of securing local, state and federal permits. Since UNE is about to bring an application to the Biddeford Planning Board, *it is vital* that the public have access to any and *all representations the university has made* about the location of the proposed pier. And is very strange that UNE has refused to release it.

Commenting about the pier proposal, UNE's lawyer wrote last year that the university "cherishes" its relationship with the City of Biddeford. Respectfully, I formally request that the Mayor, the City Manager or the City Council contact Mr. Herbert and ask him to release the full NIST application to

the City of Biddeford and the Planning Board. I ask that this contact with UNE's president take place before the first Planning Board meeting at which UNE introduces its pier proposal. Thank you very much for your continuing commitment to transparency and open government, and I look forward to your reply.

Sincerely,

John Schafer
Biddeford

Whitten, Nan

From: Hills Beach John <hillsbeachjohn@yahoo.com>
Sent: Wednesday, April 9, 2025 12:15 PM
To: Phinney, Brian
Cc: Galbraith, David; Planning Board; Whitten, Nan; Macneill, Shelly
Subject: A request for notification

Caution: This is an external email. Please take care when clicking links or opening attachments. When in doubt, contact the IT Department

Good morning, Brian. Love the work you are doing on behalf of the City. I know it's not an easy time, and we are lucky to have had you available and willing to step into the breach.

As far as the UNE pier is concerned, am I correct in assuming that the application has not yet been scheduled for a Planning Board agenda? Also, I won't belabor the point, but due to "unique" circumstances, Planning Board review will be the one and only time during which those with local knowledge of how the river flows will be able to provide their input to a regulatory body. Essentially, Planning Board proceedings will be the only chance for Biddeford citizens to actually be represented.

For that reason, may I ask that you ensure that I be copied from this point on to all future communications between the Planning Department and UNE, and vice versa, in regard to the application for a new marine sciences research pier? If I could also be notified as to when this application is first scheduled onto a Planning Board agenda, that would be great. I look forward to your reply, and thank you very much.

Sincerely,

John

Whitten, Nan

From: Hills Beach John <hillsbeachjohn@yahoo.com>
Sent: Thursday, April 10, 2025 1:43 PM
To: Grohman, Martin; jmacphail@sacomaine.org
Cc: jbohenko@sacomaine.org; Phinney, Brian
Subject: Deadline looms, UNE hasn't submitted pier application
Attachments: all mooring holders.pdf

Caution: This is an external email. Please take care when clicking links or opening attachments. When in doubt, contact the IT Department

Deadline looms, UNE hasn't submitted pier application

(Biddeford, Maine) A Biddeford city official confirmed that as of yesterday the University of New England (UNE) had not submitted an application to the Biddeford Planning Board for a new marine sciences pier it would like to build near the mouth of the Saco River.

The U.S. Army Corps of Engineers (USACE) informed the university last month that permitting conditions require construction on the pier to begin by October 14 of this year. Typically a project so large takes at least several meetings for the Planning Board to thoroughly vet an application. Additionally, anger in the community about UNE's secretive methodology for gaining necessary approvals may spur robust participation by the public, encouraging the board to take extra care in reviewing the application.

"I promise you one thing, the university threatening to sue the city more than a year before it submits an application is going to be a big deal," said John Schafer, former chair of Biddeford's Harbor Commission. "In February of 2024 their lawyer said the pier's location is a settled matter, and anything but city approval for their desired location would be an illegal act. Planning board members may have a thing or two to say about that."

Schafer said another significant hurdle for planning board approval is the existence of private moorings where UNE wants to build. Only Biddeford's harbormaster has the authority to assign, remove or re-assign moorings on the lower Saco River and in the harbor areas at Biddeford Pool. If UNE tries to forcibly expel mooring owners and the matter ends up in court, Schafer believes that process could lead to expiration of the permit from USACE.

"UNE doesn't own the river. I can't see any way around the issue of moorings unless UNE sues Biddeford. And if that happens, I can't see the planning board granting its approval until all of that is sorted out," Schafer said.

Further complicating the process is the $3.5 million in taxpayer money that UNE plans to use for its pier. In February of 2024, while threatening Biddeford's city attorney with a lawsuit, UNE's attorney Ron Schneider wrote, "Very importantly, continued delays would put at risk significant federal dollars specifically earmarked by Senator Collins for this project."

"I'm strongly in favor of UNE having a pier, but it needs to be in the right place," according to Schafer.

(**1 attachment**: 5 emails from mooring owners to City and to USACE)

---30---

Whitten, Nan

From:	Hills Beach John <hillsbeachjohn@yahoo.com>
Sent:	Saturday, April 5, 2025 7:55 AM
To:	Whitten, Nan; Grohman, Martin; Randy Seaver; srichelieu@metln.org; newsdesk@sacobaynews.com
Cc:	LaFountain, Liam; Lessard, Marc; Ortiz, Doris; Emhiser, William; Whiting, Scott; Beaupre, Rogerp; Gross, Neva; Belanger, Norman; Center, Harry; Planning Board; Gervais, George
Subject:	Re: Question about process on the UNE pier application

Caution: This is an external email. Please take care when clicking links or opening attachments. When in doubt, contact the IT Department

Mr. Mayor, thank you for answering these questions that I posed to you on February 17. It confirms for me that you and the Council respect members of the public and are committed to transparency and open government. That is very important and much appreciated.

You and I disagree strongly on one point. You wrote that Mr. Fuhrman's abstention "did not affect the final outcome either way." Not only did he abstain from the vote, he also abstained from any discussion of the application. As a lawyer, he could have been persuasive with other Commissioners. Several Biddeford residents attended the hearing, and discussion was heated. The UNE attorney made a glaring misstatement, and that went uncorrected. In general, SRCC is infamous for tormenting applicants. Some poor guy on Cleaves Street wants to build a shed, he has to go to two or three meetings to get grilled. UNE and a $3.5 million pier sail through in a single meeting? UNHEARD OF. Believe me, Mr. Fuhrman's abstention and complete silence was a critical factor in the outcome. I was there and witnessed the evening's proceedings. Biddeford's residents were completely unrepresented at the meeting, as they have been through this entire process.

That said, my neighbors tell me Mr. Fuhrman is honorable, and a skilled attorney. I'm sure his personal abstention was well considered and proper. The SRCC proceedings are over and nothing can be done about it now. The important part of my message back to you is that I appreciate the response to my questions. Thank you very much, and have a great weekend.

John

On Wednesday, April 2, 2025 at 03:10:19 PM EDT, Grohman, Martin <martin.grohman@biddefordmaine.org> wrote:

Hi John,

Thank you for reaching out with your questions regarding the proposed pier at the University of New England's Marine Science Center. Councilor Emhiser asked me to jump in with responses. I appreciate your engagement on this topic.

1. Why did Biddeford's representative to the Saco River Corridor Commission abstain from voting on the pier proposal last August?

it's my understanding that this was a personal decision made just to be certain nobody would interpret any bias one way or the other, as Don's wife is a former UNE Trustee and currently serves as Trustee Emerita. Additionally, the proposal passed with a 6–3 vote, so his abstention did not affect the final outcome either way.

2. Did the City Manager know ahead of time that he would abstain?
Not likely. The Saco River Corridor Commission has 20 member communities and is an agency separate from the City of Biddeford that operates independently under state law. While members are appointed by the member communities' Mayor and confirmed by the City Council or Select Board, they are expected to serve on the Commission as independent voices. There is no indication that the Biddeford City Manager—or any municipal manager, for that matter—would be informed in advance of how an individual SRCC member intends to vote or recuse him or herself.

3. If the City Manager knew he would abstain, why didn't Biddeford's alternate representative attend the meeting?
At the time of the vote, Biddeford did not have an alternate member appointed to the SRCC. That position was and is vacant. These volunteer roles are a big time commitment, and as is the case for many City committees and appointments, I am currently looking for a volunteer to serve. Please send anyone you think would be good (for any committee) my way.

Thank you,
Marty

Whitten, Nan

From: Hills Beach John <hillsbeachjohn@yahoo.com>
Sent: Saturday, April 5, 2025 9:20 AM
To: Grohman, Martin; Phinney, Brian; LaFountain, Liam; Lessard, Marc; Ortiz, Doris; Emhiser, William; Whiting, Scott; Beaupre, Roger; Gross, Neva; dylyan.doughty@biddefordmaine.org; Belanger, Norman; Planning Board; Center, Harry
Cc: Randy Seaver; newsdesk@sacobaynews.com; ggraham@pressherald.com; srichelieu@metln.org; dmendros@metln.org; cfox@metln.org
Subject: A request to assist Biddeford citizens
Attachments: NIST response FOIA.pdf

Caution: This is an external email. Please take care when clicking links or opening attachments. When in doubt, contact the IT Department

Dear Council, Mayor Grohman & Mr. Phinney,

Despite an effort by Senator Susan Collins' office to prevent me from doing so, I filed a FOIA request about the UNE pier with the National Institute of Standards and Technology (NIST). I'm pleased to report that the agency notified me recently that the request is able to move forward --- it is not denied due to national security concerns or any of the other "exceptions" that could theoretically apply. Yes, it turns out the application that UNE filed with NIST in order to secure $3.5 million in taxpayer funds is indeed a public document.

In January, I wrote to the president of UNE, James Herbert, and asked him to proactively release the application that the university filed with NIST. He ignored me.

I asked because most likely the NIST application includes representations about pier location and the process of securing local, state and federal permits. Since UNE is about to bring an application to the Biddeford Planning Board, *it is vital* that the public have access to any and *all representations the university has made* about the location of the proposed pier. And is very strange that UNE has refused to release it.

Commenting about the pier proposal, UNE's lawyer wrote last year that the university "cherishes" its relationship with the City of Biddeford. Respectfully, I formally request that the Mayor, the City Manager or the City Council contact Mr. Herbert and ask him to release the full NIST application to the City of Biddeford and the Planning Board. I ask that this contact with UNE's president take place before the first Planning Board meeting at which UNE introduces its pier proposal. Thank you very much for your continuing commitment to transparency and open government, and I look forward to your reply.

Sincerely,

John Schafer
Biddeford

Whitten, Nan

From:	Hills Beach John <hillsbeachjohn@yahoo.com>
Sent:	Sunday, March 30, 2025 7:48 AM
To:	Grohman, Martin
Cc:	LaFountain, Liam; Lessard, Marc; Ortiz, Doris; Emhiser, William; Whiting, Scott; Beaupre, Rogerp; Gross, Neva; dylyan.doughty@biddefordmaine.org; Belanger, Norman; Center, Harry; Planning Board; srichelieu@metln.org; dmendros@metln.org; ggraham@pressherald.com; newsdesk@sacobaynews.com; Randy Seaver; cfox@metln.org; erussell@pressherald.com; unepierreview@yahoo.com
Subject:	Re: Question about process on the UNE pier application

Caution: This is an external email. Please take care when clicking links or opening attachments. When in doubt, contact the IT Department

Good morning Mayor Grohman, I hope all is well with you.

It would be unfortunate to inadvertently create an impression that the City of Biddeford has joined UNE, the City of Saco, the DEP, and Senator Collins' office in what appears to be an effort to chill public dialogue about UNE's pier location on the Saco River.

As examples, I cite UNE's refusal to release the application it submitted to NIST, the DEP Commissioner refusing a citizens request to hold a public hearing, Saco prohibiting a presentation on pier alternatives to its Coastal Waters Commission, Senator Collins' office refusing to provide contact information at NIST, UNE failing to allow public participation in the site survey it conducted for the Bureau of Submerged Lands, and of course UNE pressuring the editor of the Saco Bay News because the university didn't want them reporting on the controversy. (No story has appeared there since.) These incidents add up to just the opposite of transparency and open government

Ten months have passed since the university submitted its application to the City. Tomorrow marks six weeks since I asked a few questions about process. It has been four weeks since I sent a reminder email, and neither of my emails has resulted in answers to the questions or even acknowledgment of having received the inquiry. These are the questions I asked:

1. Why did Biddeford's representative to the Saco River Corridor Commission abstain from voting on the pier proposal, when it was before that regulatory body last August?
2. Did the City Manager know ahead of time that he would abstain?
3. If the manager knew he would abstain, why didn't Biddeford's alternate representative attend the meeting and provide us with appropriate representation?
4. Do you have any idea how far along the Army Corps is in their review, and when they might reach a determination?
5. If the Army Corps declines to issue a permit, what happens then?

I should mention again that I have received emails from Saco and Biddeford city councilors expressing their strong support for transparency and full disclosure as this pier proposal is reviewed by regulatory authorities. They seem committed to that principle, which is reassuring. With that in mind, I'd like to make a modest suggestion. At some point in Tuesday's 4/1 Council meeting, could either you or Mr. Phinney inform the public that the 5 questions listed above have been received by the City? And, would it not be reasonable to announce that the answers to those questions will be researched in the next two weeks and then provided at the next Council meeting on 4/15?

Thank you for your time, and please know that I plan to share your response with the many Saco and Biddeford residents who are following this issue.

Sincerely,

John Schafer

On Monday, March 3, 2025 at 09:02:27 PM EST, Hills Beach John <hillsbeachjohn@yahoo.com> wrote:

Dear Mayor Grohman,

I know it has been a busy time at Biddeford City Hall recently, so I am writing to let you know I understand that you may need a little more time to answer the 5 questions I posed on February 17. I also repeat my appreciation for the strong statements of support for openness and transparency from you and the Council.

In a related matter, as you know Sen. Collins and/or her staff, over the course of a month, did their best to make sure I didn't get some routine UNE pier information I requested. So I went around that obstacle and found the information myself. My next step was to file a FOIA request with NIST, and that agency promised to get back to me within 20 days. My request was for the application UNE filed with NIST to get $3.5 in taxpayer funding. Specifically, I am interested in learning what representations the university made to federal authorities about the local permitting process. I'd like to know what they said about the Planning Board and any other regulatory hurdles they face. I believe the citizens of Biddeford and Saco deserves to have that information, as does the Planning Board and City Council. I will let you know when NIST replies.

As mentioned, I don't want to be unreasonable in my petition to you. Please take what time you need to help me understand the answers to these questions. My original email is posted below.

Sincerely,

John Schafer
Hills Beach, Biddeford

On Monday, February 17, 2025 at 12:16:28 PM EST, Hills Beach John <hillsbeachjohn@yahoo.com> wrote:

Good afternoon, Mayor Grohman.

I have a few questions about process, in regard to UNE's proposal to build a new pier.

Many applicants have a difficult time proposing a small dock or structure, or some minor alteration on their riverfront property, to the Saco River Corridor Commission. Often the applicant must endure

several meetings before a permit is granted. Some would say that the SRCC is notorious for making people really sweat before they are granted a permit.

It was a surprise to many last summer when UNE's proposal for a pier, a major intrusion into the river costing several million dollars, sailed through in one meeting. Also, it was alarming that Biddeford's SRCC representative abstained from the voting, and thus Biddeford citizens were unrepresented in the discussion and in the vote on this major proposal. Some questions:

1. Why did he abstain from voting?
2. Did the City Manager know ahead of time that he would abstain?
3. If the manager knew he would abstain, why didn't Biddeford's alternate representative attend the meeting and provide us with appropriate representation?

As to where UNE's application stands now, on the City website it states that UNE can seek review by all non-City review agencies/authorities. "Upon the completion of those processes, the local review processes will begin."

I can't vouch for the veracity of this information, but I have been told that the U.S. Army Corps of Engineers will not issue a permit if they don't have "sign off" from the harbormaster. Our harbormaster has been ordered not to comment on the application. The City Manager's intent to hire a temporary harbormaster was deemed illegal by the Maine Harbormasters Association, and since then I can't recall seeing information about another solution. As far as I know, the Army Corps is evaluating UNE's application without benefit of the local knowledge that a harbormaster would normally provide.

1. Do you have any idea how far along the Army Corps is in their review, and when they might reach a determination?
2. If the Army Corps declines to issue a permit, what happens then?

It seems to me this application is in some sort of limbo. It was submitted to the City more than eight months ago, but has yet to appear on a Planning Board agenda. Four months before UNE even submitted the application, the university threatened to sue Biddeford if the pier location is not approved exactly as submitted. Existing mooring owners have threatened litigation if their moorings are moved, yet they must be moved for UNE to build the pier as outlined in the current application. The City Manager silenced the harbormasters before securing a back-up plan, but he has since resigned and is leaving in two months, effectively leaving this crucial question for others to solve. Last, I don't see how the Army Corps can issue a permit without having in hand the local knowledge of the river that experts like a harbormaster would normally provide.

The situations seems complex and confusing. I recognize that consultation with the City Attorney and the City Council may be required before you can answer. If you can get back to me at some point with clarification, that would be most appreciated. I suggest also that when you have the answers, the "What happens next?" section of the FAQ page for this project might need to be updated.

Thank you, Mayor Grohman. I conclude by thanking you and the City Council for all previous strong statements of support for openness and transparency in the conduct of City business.

Sincerely
John Scahfer

Whitten, Nan

From: Hills Beach John <hillsbeachjohn@yahoo.com>
Sent: Monday, March 24, 2025 12:33 PM
To: Phinney, Brian; Center, Harry
Cc: srichelieu@metln.org; editor@inthecourier.com; dmendros@metln.org; Randy Seaver; newsdesk@sacobaynews.com; Planning Board
Subject: Re: UNE could trigger litigation over moorings
Attachments: 25.03.24 McCaskey to USACE.pdf

Caution: This is an external email. Please take care when clicking links or opening attachments. When in doubt, contact the IT Department

Good morning, Mr. Phinney, I hope you had a great weekend. Attached, for your files, please find another letter from a private mooring owner on the Saco River. When the UNE pier reaches municipal regulatory review, it appears the collective preference of the mooring holders will be that UNE choose a location that does not interfere with already well established navigation patterns on the Saco River.

Thank you for your time.

Sincerely,

John Schafer
Hills Beach, Biddeford

On Saturday, March 15, 2025 at 05:59:47 PM EDT, Hills Beach John <hillsbeachjohn@yahoo.com> wrote:

Dear Mr. Phinney & Attorney Center,

Before he was fired, the previous city manager removed the harbormaster from regulatory review of UNE's proposed pier, and did the same to the assistant harbormaster, citing the curious logic that the harbormaster had trained the assistant harbormaster.

The previous city manager then told the media that he would replace the harbormasters' expertise and local knowledge of the Saco River. He never did, and has now exited the stage. Of course, he muzzled the harbormasters after UNE threatened to sue the City if, after the university submitted an application several months later, the application was not approved as submitted.

Mr. Phinney, I have heard nothing but great things about your professionalism and respectful treatment of the City's residents. Very good news for Biddeford.

I am providing you with a few emails to which I have been copied in the last couple of months. They make it plain that a situation exists in regard to existing mooring owners and it probably should not be minimized or brushed aside, as UNE has been trying to do. I'm just stating my personal opinion here, but I would imagine that if Biddeford's regulatory process continues to omit the expertise that a qualified

harbormaster would normally provide, and if UNE then tries to force removal of existing moorings, the possibility of litigation has to be considered.

I know you are just beginning your managerial duties, but I felt you should be alerted to these emails. Three were written to the U.S. Army Corps of Engineers, and one to the previous city manager.

Good luck, and I wish you much success.

John Schafer

Whitten, Nan

From: Pier Review <unepierreview@yahoo.com>
Sent: Thursday, March 20, 2025 6:43 PM
To: Grohman, Martin
Subject: Drone photograph refutes UNE lawyer's claim
Attachments: NOAA Chart.pdf; DIAGRAM - Fig. 7.pdf; PHOTO - Forbidden Zone.pdf; 25.03.20 memo to USACE.pdf; DIAGRAM - Smoking Gun.pdf

Caution: This is an external email. Please take care when clicking links or opening attachments. When in doubt, contact the IT Department

Drone photograph refutes UNE lawyer's claim

(Biddeford, Maine) The University of New England (UNE), through its attorney, made public statements last year about water depth on the Saco River that appear to be fabrications.

The statements were in letters to the City of Biddeford and in a Portland Press Herald article. In rebuttal, a coalition of Biddeford and Saco residents has submitted a memo and photographic evidence to the U.S. Army Corps of Engineers (USACE) showing why the attorney's statements are deceptive, and why they may be part of a strategy of intimidation by the university. The letters containing false statements threatened Biddeford with a lawsuit if the city does not approve a new marine sciences research pier that UNE wants to build on the Saco River.

"UNE's lawyer says a specific spot on the river doesn't have deep enough water, while their engineers say the very same spot has plenty of deep water but they don't need it," said Kyle Noble, a Biddeford resident and former city councilor. "Both cannot be true. It appears the engineers are telling the truth and the lawyer is not."

As controversy swirled around the proposal last year, UNE's lawyer and PR department ridiculed Biddeford's harbormaster, who suggested the pier might be better sited at a location other than what the university prefers. The alternative location would afford UNE deeper water at mean low tide, making it much easier for the university to maneuver its 60-foot research vessel in and out of the river. But in defending UNE's preferred pier location, the attorney mocked the harbormaster's expertise by saying his idea "makes no sense." He threatened to sue the city. As a result, Biddeford's former city manager acquiesced to UNE's charge that the harbormaster is biased. The former city manager then used that pretext to remove the harbormaster and his assistant from their normal duties of reviewing UNE's application.

"A NOAA chart, photographic evidence we submitted to the Army Corps, and UNE's hired engineers all confirm deep water very close to shore, exactly where the harbormaster says it is." Noble said. "As we have suggested all along, UNE should have a new pier, but science and hard data should be used to site it properly."

(Attached: "MEMO to USACE" and four supporting documents.)

Noble said USACE's internal guidelines require the agency to consider alternative locations for the proposed pier, and to minimize impact and disruption to the "aquatic environment" that any new structure on the river would create. He said local residents, commercial fishermen and pleasure boaters simply want to make sure that a normal and thorough regulatory review of UNE's application takes place. According to Noble, the process must include input from those who have extensive local knowledge of how the Saco River flows.

---END---

Whitten, Nan

From:	Hills Beach John <hillsbeachjohn@yahoo.com>
Sent:	Saturday, March 15, 2025 6:00 PM
To:	Phinney, Brian; Center, Harry
Cc:	srichelieu@metln.org; editor@inthecourier.com; dmendros@metln.org; Randy Seaver; newsdesk@sacobaynews.com; Planning Board
Subject:	UNE could trigger litigation over moorings
Attachments:	Chadbourner to Jacobson.pdf; Tibbetts to Bennett.pdf; Tibbetts to Jacobson.pdf; Hatch to Jacobson.pdf

Caution: This is an external email. Please take care when clicking links or opening attachments. When in doubt, contact the IT Department

Dear Mr. Phinney & Attorney Center,

Before he was fired, the previous city manager removed the harbormaster from regulatory review of UNE's proposed pier, and did the same to the assistant harbormaster, citing the curious logic that the harbormaster had trained the assistant harbormaster.

The previous city manager then told the media that he would replace the harbormasters' expertise and local knowledge of the Saco River. He never did, and has now exited the stage. Of course, he muzzled the harbormasters after UNE threatened to sue the City if, after the university submitted an application several months later, the application was not approved as submitted.

Mr. Phinney, I have heard nothing but great things about your professionalism and respectful treatment of the City's residents. Very good news for Biddeford.

I am providing you with a few emails to which I have been copied in the last couple of months. They make it plain that a situation exists in regard to existing mooring owners and it probably should not be minimized or brushed aside, as UNE has been trying to do. I'm just stating my personal opinion here, but I would imagine that if Biddeford's regulatory process continues to omit the expertise that a qualified harbormaster would normally provide, and if UNE then tries to force removal of existing moorings, the possibility of litigation has to be considered.

I know you are just beginning your managerial duties, but I felt you should be alerted to these emails. Three were written to the U.S. Army Corps of Engineers, and one to the previous city manager.

Good luck, and I wish you much success.

John Schafer

Whitten, Nan

From: Kevin Mcmanus <kjmcmanus@verizon.net>
Sent: Monday, March 3, 2025 10:48 PM
To: Hills Beach John; Grohman, Martin
Cc: LaFountain, Liam; Lessard, Marc; Ortiz, Doris; Emhiser, William; Whiting, Scott; Beaupre, Roger; Gross, Neva; dylyan.doughty@biddefordmaine.org; Belanger, Norman; Center, Harry; Planning Board; srichelieu@meltn.org; dmendros@meltn.org; ggraham@pressherald.com; newsdesk@sacobaynews.com; Randy Seaver; cfox@meltn.org; erussell@pressherald.com
Subject: Re: Question about process on the UNE pier application

Caution: This is an external email. Please take care when clicking links or opening attachments. When in doubt, contact the IT Department

John - As usual a great job in keeping the City honest in their review of the Pier - I have a thought for your review as follows- As a concerned citizen, with some knowledge of the Saco River from years of boating, who is also knowledgeable on the City structure and committee assignments, a Long time Biddeford beach resident and a retired executive with an available calendar for volunteer work--- I am considering offering the mayor if he would support my engagement on his behalf to do the in depth analysis to provide him with the information necessary to respond and provide a written answer to your five questions ??

I will also commit to be totally impartial in my research and would serve as an unbiased intermediary in seeking data from UNE, city files, Senator Collins office , the Federal Bereau of Investigation, Indian council, ME dept of Environmental Affairs, SRCC, ME department of Submerged Lands, Biddeford City Manager, Biddeford Council, Biddeford Planning dept and the Army Corps of Engineers. I am sure, given the complexity of answering your questions - I am positive Mayor Grohman will immediately consent to my offer to volunteer on this matter.

Sent from the all new AOL app for iOS

On Monday, March 3, 2025, 9:02 PM, Hills Beach John <hillsbeachjohn@yahoo.com> wrote:

Dear Mayor Grohman,

I know it has been a busy time at Biddeford City Hall recently, so I am writing to let you know I understand that you may need a little more time to answer the 5 questions I posed on February 17. I also repeat my appreciation for the strong statements of support for openness and transparency from you and the Council.

In a related matter, as you know Sen. Collins and/or her staff, over the course of a month, did their best to make sure I didn't get some routine UNE pier information I requested. So I went around that obstacle and found the information myself. My next step was to file a FOIA request with NIST, and that agency promised to get back to me

within 20 days. My request was for the application UNE filed with NIST to get $3.5 in taxpayer funding. Specifically, I am interested in learning what representations the university made to federal authorities about the local permitting process. I'd like to know what they said about the Planning Board and any other regulatory hurdles they face. I believe the citizens of Biddeford and Saco deserves to have that information, as does the Planning Board and City Council. I will let you know when NIST replies.

As mentioned, I don't want to be unreasonable in my petition to you. Please take what time you need to help me understand the answers to these questions. My original email is posted below.

Sincerely,

John Schafer
Hills Beach, Biddeford

On Monday, February 17, 2025 at 12:16:28 PM EST, Hills Beach John <hillsbeachjohn@yahoo.com> wrote:

Good afternoon, Mayor Grohman.

I have a few questions about process, in regard to UNE's proposal to build a new pier.

Many applicants have a difficult time proposing a small dock or structure, or some minor alteration on their riverfront property, to the Saco River Corridor Commission. Often the applicant must endure several meetings before a permit is granted. Some would say that the SRCC is notorious for making people really sweat before they are granted a permit.

It was a surprise to many last summer when UNE's proposal for a pier, a major intrusion into the river costing several million dollars, sailed through in one meeting. Also, it was alarming that Biddeford's SRCC representative abstained from the voting, and thus Biddeford citizens were unrepresented in the discussion and in the vote on this major proposal. Some questions:

1. Why did he abstain from voting?
2. Did the City Manager know ahead of time that he would abstain?
3. If the manager knew he would abstain, why didn't Biddeford's alternate representative attend the meeting and provide us with appropriate representation?

As to where UNE's application stands now, on the City website it states that UNE can seek review by all non-City review agencies/authorities. "Upon the completion of those processes, the local review processes will begin."

I can't vouch for the veracity of this information, but I have been told that the U.S. Army Corps of Engineers will not issue a permit if they don't have "sign off" from the harbormaster. Our harbormaster has been ordered not to comment on the application. The City Manager's intent to hire a temporary harbormaster was deemed illegal by the Maine Harbormasters Association, and since then I can't recall seeing information about

another solution. As far as I know, the Army Corps is evaluating UNE's application without benefit of the local knowledge that a harbormaster would normally provide.

1. Do you have any idea how far along the Army Corps is in their review, and when they might reach a determination?
2. If the Army Corps declines to issue a permit, what happens then?

It seems to me this application is in some sort of limbo. It was submitted to the City more than eight months ago, but has yet to appear on a Planning Board agenda. Four months before UNE even submitted the application, the university threatened to sue Biddeford if the pier location is not approved exactly as submitted. Existing mooring owners have threatened litigation if their moorings are moved, yet they must be moved for UNE to build the pier as outlined in the current application. The City Manager silenced the harbormasters before securing a back-up plan, but he has since resigned and is leaving in two months, effectively leaving this crucial question for others to solve. Last, I don't see how the Army Corps can issue a permit without having in hand the local knowledge of the river that experts like a harbormaster would normally provide.

The situations seems complex and confusing. I recognize that consultation with the City Attorney and the City Council may be required before you can answer. If you can get back to me at some point with clarification, that would be most appreciated. I suggest also that when you have the answers, the "What happens next?" section of the FAQ page for this project might need to be updated.

Thank you, Mayor Grohman. I conclude by thanking you and the City Council for all previous strong statements of support for openness and transparency in the conduct of City business.

Sincerely
John Scahfer

Whitten, Nan

From: Hills Beach John <hillsbeachjohn@yahoo.com>
Sent: Tuesday, February 25, 2025 12:00 PM
To: robert.slocum@nist.gov
Cc: Grohman, Martin; Phinney, Brian; LaFountain, Liam; Lessard, Marc; Ortiz, Doris; Emhiser, William; Whiting, Scott; Beaupre, Rogerp; Gross, Neva; dylyan.doughty@biddefordmaine.org; Belanger, Norman; Planning Board
Subject: Freedom of information request to NIST

Caution: This is an external email. Please take care when clicking links or opening attachments. When in doubt, contact the IT Department

Good afternoon, Mr. Slocum.

This is a request under the Freedom of Information Act, 5 U.S.C. Sec. 552. I request PDF copies of all documents that the University of New England submitted to NIST, during an application process that culminated in the award of Project Grant 60NANB23D148.

I have carefully reviewed the exceptions, listed on the NIST website, that prevent compliance with a FOIA request. For a pier that facilitates "ocean-going research activities," I can't see that any of the exceptions apply.

In addition, I would like copies of all email traffic discussing this application as follows:

- Sent or received from January 1, 2022 through February 25, 2025.
- The sender and the recipient have email addresses that end in @collins.senate.gov and in @nist.gov. (In other words, all conversations about the UNE pier application, within the timeframe mentioned above, between NIST personnel and the office of U.S. Senator Susan Collins.)

Thank you, Mr. Slocum.

On a related matter, I have the 9/9/24 letter you wrote to the Maine Coastal Program at the Maine Department of Marine Sources. You note at the end of the first paragraph that your letter was "based, in large part, on information provided by UNE to NIST." That certainly explains your liberal use of the term "Preferred Alternative" throughout the rest of the letter.

Please be advised that while that jargon may be UNE's preferred language, the U.S. Army Corps of Engineers has yet to issue a permit to the university. Further, the City of Biddeford has written to UNE and in stern language made it clear that "in no way" has the City approved the pier's location.

Several months before submitting its application to the City, UNE threatened to sue the City if *their* preferred location is not approved exactly as submitted. However, the attempt at intimidation failed. Our local elected officials have promised Biddeford residents that regulatory review of the application will be open, transparent, and thorough. I might suggest that some respect for the Biddeford Planning Board by the Applicant is appropriate, because it will be that authority who decides what the Preferred Alternative actually is. Until then use of the term may be premature. Last note, UNE hasn't even put its application in front of the Planning Board yet.

Thank you for fielding my email, and I look forward to receipt of the requested information.

Sincerely,

John Schafer
Hills Beach, Biddeford, Maine

Whitten, Nan

From:	Hills Beach John <hillsbeachjohn@yahoo.com>
Sent:	Monday, February 24, 2025 2:56 PM
To:	Buck Pam (Collins)
Cc:	Randy Seaver; srichelieu@metln.org; dmendros@metln.org; cfox@metln.org; ggraham@pressherald.com; erussell@pressherald.com; desk@newscentermaine.com; newsdesk@sacobaynews.com; wmtw@wmtw.com; tvmail@wgme.com; aldiamon@herniahill.net; ssharon@mainepublic.org; lmccauley@mainemorningstar.com; sean.a.murphy@charter.com; attorney.general@maine.gov
Subject:	UNDERSTOOD: Sen. Collins won't penetrate UNE pier secrecy
Attachments:	25.02.24 Communications TRANSCRIPT.pdf

Caution: This is an external email. Please take care when clicking links or opening attachments. When in doubt, contact the IT Department

Dear Pam,

I'm writing to let you know that I've decided to conclude this constituent's attempt to get information from Senator Collins.

I made my original and very simple request on January 28. On January 30, I wrote that I would understand if your office felt that the request needed legal review before replying. On February 6, you wrote that your team had reached out to a federal agency (NIST) to identify the best point of contact. It is now February 24, and I still don't have an email address. I suspect that's not an accident. I conclude that senior staff or even the Senator herself has instructed you not to give me the information, and/or to do everything possible to deter me from further pursuit.

My request was innocuous and simple, just an email address. Specifically, an email address for a person who is familiar with the application that UNE filed with NIST, a division of the U.S. Department of Commerce. The application was for a pier that "will expand UNE's capabilities to conduct ocean-going research and facilitate scientific and practical exchanges with local, regional, and national marine researchers and industry partners." Obviously national security has nothing to do with this application, which resulted in the award of $3.5 million dollars in taxpayer money to UNE.

You told me that your office did not have "access" to this contact information for a federal employee. Also, in a February 7 voicemail, you said the Senator's office "has not had any communications, emails, or phone communication, except for just recently when we reached out for a point of contact on your behalf." That had me scratching my head because in July of 2022 Senator Collins issued a press release, "$3.5 Million for UNE Coastal Research Secured

by Senator Collins in Funding Bill in First Key Step." I don't see how she could secure the funding while never having been in email contact with NIST about UNE's pier.

It has been 27 days since I first contacted you. Senator Collins is the Chair of the Appropriations Committee, which approves all NIST funding. She has enormous influence with every federal agency. Surely anybody from her office could obtain a name and address of an NIST staffer, in two minutes or less, with a phone call. Assuming the Senator is routinely briefed by staff, her intent to block my request is clear.

For your files and for the press folks copied to this message, I am attaching a record of all voicemails and emails about my request since I first reached out to you on January 28. I am confident in my conclusion that as a staffer you have been put in a very bad spot personally, tasked with making sure I don't get the information. Despite that, please know that I have no quarrel with you. You have been nothing but courteous and professional with me. Thank you for that, and I hope I have been just as courteous and respectful with you.

Sincerely,

John Schafer

(1 attachment)

Whitten, Nan

From: Kevin Mcmanus <kjmcmanus@verizon.net>
Sent: Thursday, February 13, 2025 5:08 PM
To: Hills Beach John; Randy Seaver; newsdesk@sacobaynews.com; ggraham@pressherald.com; erussell@pressherald.com; dmendros@metln.org; srichelieu@metln.org; editor@inthecourier.com; cfox@metln.org
Cc: Planning Board; attorney.general@maine.gov
Subject: Re: Discovery about UNE's claims on pier location

Caution: This is an external email. Please take care when clicking links or opening attachments. When in doubt, contact the IT Department

John - My compliments to Kyle and yourself go the comprehensive, factual and articulate memo to USACE. Hopefully this memo receives wide circulation to all parties impacted by the proposed new pier
!!!!

Sent from the all new AOL app for iOS

On Thursday, February 13, 2025, 4:19 PM, Hills Beach John <hillsbeachjohn@yahoo.com> wrote:

Good afternoon. Today I was copied on an email to the U.S. Army Corps of Engineers, sent by a Biddeford resident who served 4 terms on the Biddeford City Council. (The email is below.) He cites a memo that GEI Consultants sent to the City of Biddeford that directly contradicts public statements that UNE has repeatedly made about depth close to shore on the Saco River. I checked the City website today, and yes, GEI's memo is posted there. And the memo language cited below in his note to the Army Corps is accurate.

Also, you may want to look at the chart he sent to the Army Corps. It is attached, and it is compelling.

Sincerely,
John Schafer

From: Kyle H. Noble <noblehouse@maine.rr.com>
To: jana.l.jacobson@usace.army.mil <jana.l.jacobson@usace.army.mil>
Sent: Thursday, February 13, 2025 at 02:27:14 PM EST
Subject: UNE research pier bathymetrics continued

February 13, 2025
MEMO to: Jana Jacobson, Project Manager, U.S. Army Corps of Engineers
From: Kyle Noble, resident, Biddeford, Maine

Dear Ms. Jacobson,

I am following up my recent email about questionable aspects of the public case that the University of New England has been trying to make, as it seeks <u>uncontested</u> approval of an application for a new marine research pier on the Saco River. (Please note that I do not have the documents filed with the U.S. Army Corps of Engineers, but I refer to the application available on the City of Biddeford website. I presume that it is very similar if not identical to what UNE has submitted to USACE.)

Here is my premise: The exploration of a reasonable alternative location is <u>required</u> by the U.S. Army Corps of Engineers (USACE), but UNE may be trying to make sure that such an exploration <u>never</u> takes place.

I begin with public information for Applicants written by the USACE. In an online document called GENERAL PERMITS FOR THE STATE OF MAINE, the Corps writes that UNE can receive a permit <u>only if</u> UNE satisfies all terms and general conditions. (A permit is referred to as a "GP.") Here is the text of the 2nd general condition:

- ***"Minimal Direct, Secondary and Cumulative Effects****. To be eligible and subsequently authorized by these GPs, an activity shall result in no more than minimal individual and cumulative effects on the aquatic environment as determined by the Corps in accordance with the criteria listed within these GPs and GCs. This may require project modifications involving avoidance, minimization, or compensatory mitigation for unavoidable impacts to ensure that the net adverse effects of an activity are no more than minimal."*

Also, according to a USACE manual, Guide for Permit Applications: *"The Corps will consider the following general criteria in the evaluation of every application:*

- *the relative extent of the public and private need for the proposed activity;*
- *the practical use of reasonable alternative locations and methods to accomplish the objective of the proposed activity; and*
- *the extent and permanence of the proposed activities' beneficial and detrimental effects on the public and private uses to which the area is suited."*

In harmony with USACE guidance, several parties with extensive physical knowledge of the lower Saco River have suggested a "reasonable alternative location" many times in recent years. The proposed alternative would "result in no more than minimal individual and cumulative effects on the aquatic environment."

"The water close to shore isn't deep enough"

UNE has ridiculed and derided the notion of a reasonable alternative by proclaiming that deep water close to shore does not exist. Therefore, they argue, there is absolutely no need to explore a possible alternative. For instance, on March 7, 2024, UNE's attorney wrote to the City of Biddeford that the suggested alternative "makes no sense," because a dock in that location "would sit in water that is too shallow to use."

The attorney repeated his allegation about inadequate water depth several times in two different letters to the City of Biddeford, and the university's PR person doubled down by telling the *Portland Press Herald* that a dock in the alternative location "would not reach deep enough water."

Not satisfied with the claim about inadequate water depth, the lawyer upped the ante by twice threatening to sue the City of Biddeford. He wrote, "…the location of the pier is a settled matter," and "any denial of the pier at Site 7 will be an illegal act."

The only logical purpose of the false assertion

The charts and diagrams included in the application and the lawyer's hostile rhetoric serve to discourage any regulatory authority, including USACE, from asking for a physical on-site investigation of an alternative location. And UNE appears to be asking regulatory authorities and the public to accept their claim, *no questions asked*, that there isn't enough water at the alternative location. They hope the assertion remains unchallenged.

But USACE has very good reason to ask questions --- starting with the fact that UNE's hired consultant soundly contradicts the attorney's claim about inadequate water depth. GEI Consulting wrote a memo to its client on November, 23, 2023. As part of the process of filing its application with the City of Biddeford, UNE supplied that memo to the municipality. It clearly states that there is plenty of water at the alternative location:

"The suggested alternative location does have greater depth at the main berth, approximately 11 to 12 feet…..while this additional depth could allow larger vessels to use the pier, it is not needed to support the currently proposed and/or future envisioned uses."

There is no other interpretation: UNE's own consultant has proven that the university made false statements about depth on the Saco River.

Confirming GEI's report that the alternative location has greater depth at the main berth, a local newspaper reporter published an investigative video just a few months ago in which a local mariner took depth soundings. The soundings were evidence that the attorney's statements about river depth are false (Link: https://youtu.be/kwFCvp7VAzk)

Most compelling is a chart produced by the Office of Coast Survey, a division of the National Oceanic and Atmospheric Administration (NOAA). The chart clearly shows deep water swinging in very close to shore, at the proposed alternative location. (Exactly as Biddeford's harbormaster has been saying for years, and completely consistent with depth soundings in the reporter's video. See 3-page *NOAA Chart,* PDF attached.)

In other words, data from NOAA 1.) confirms the GEI statement, 2.) directly contradicts UNE's attorney, and 3.) calls into question conclusions about optimum siting of a dock that UNE's charts and diagrams imply.

Summary of objections to UNE application and their public communications:

- UNE is trying to discourage examination of a reasonable alternative location by asserting that deep water close to shore does not exist.
- Charts and diagrams in the application help advance that false assertion.
- The false assertion, and the intimidation the charts supply, formed the basis for UNE's threat to sue Biddeford if their application is not approved *exactly* as submitted.
- As a result of legal threats, Biddeford prohibited its harbormasters from providing USACE with their expert opinions about the false assertion. USACE, at least so far, has been forced to evaluate the UNE application while deprived of expertise from those who know the river best.
- *The NOAA chart dramatically contradicts the false assertion.*
- Depth soundings on the river contradict the false assertion.
- GEI contradicts the false assertion with this succinct observation: *"The suggested alternative location does have greater depth at the main berth."*
- UNE continued to make the false assertion even while knowing that GEI disagrees with it.
- UNE's forceful statements about inadequate depth at the alternative location are wrong. Whether making those statements was an honest mistake or intentional deception is unknown.

Partial but critical tasks of permit review as *mandated* in USACE publications:

- USACE must evaluate the application to ensure "minimal individual and cumulative effects on the aquatic environment."
- USACE must consider "the practical use of reasonable alternative locations."

As far as I know, an on-site, physical investigation of the suggested alternative location has never taken place. *UNE's charts and diagrams have no value in the review of a reasonable alternative location.* And according to clearly stated USACE's own guidelines, without examining the practical use of an alternate location USACE *cannot* issue a permit to UNE for the construction of a new pier.

I hope to gather additional documents that question UNE's application, and will get that information to you as soon as possible. In the meantime, I wanted you to have the NOAA chart right away. I recognize that my email is lengthy, but I appreciate you taking the time to read and consider its contents.

Sincerely,

Kyle Noble
56 Hills Beach Road, Biddeford

Whitten, Nan

From:	Hills Beach John <hillsbeachjohn@yahoo.com>
Sent:	Monday, February 17, 2025 12:16 PM
To:	Grohman, Martin
Cc:	LaFountain, Liam; Lessard, Marc; Ortiz, Doris; Emhiser, William; Whiting, Scott; Beaupre, Rogerp; Gross, Neva; dylyan.doughty@biddefordmaine.org; Belanger, Norman; Center, Harry; Planning Board; srichelieu@metln.org; dmendros@metln.org; ggraham@pressherald.com; newsdesk@sacobaynews.com; Randy Seaver
Subject:	Question about process on the UNE pier application

Caution: This is an external email. Please take care when clicking links or opening attachments. When in doubt, contact the IT Department

Good afternoon, Mayor Grohman.

I have a few questions about process, in regard to UNE's proposal to build a new pier.

Many applicants have a difficult time proposing a small dock or structure, or some minor alteration on their riverfront property, to the Saco River Corridor Commission. Often the applicant must endure several meetings before a permit is granted. Some would say that the SRCC is notorious for making people really sweat before they are granted a permit.

It was a surprise to many last summer when UNE's proposal for a pier, a major intrusion into the river costing several million dollars, sailed through in one meeting. Also, it was alarming that Biddeford's SRCC representative abstained from the voting, and thus Biddeford citizens were unrepresented in the discussion and in the vote on this major proposal. Some questions:

1. Why did he abstain from voting?
2. Did the City Manager know ahead of time that he would abstain?
3. If the manager knew he would abstain, why didn't Biddeford's alternate representative attend the meeting and provide us with appropriate representation?

As to where UNE's application stands now, on the City website it states that UNE can seek review by all non-City review agencies/authorities. "Upon the completion of those processes, the local review processes will begin."

I can't vouch for the veracity of this information, but I have been told that the U.S. Army Corps of Engineers will not issue a permit if they don't have "sign off" from the harbormaster. Our harbormaster has been ordered not to comment on the application. The City Manager's intent to hire a temporary harbormaster was deemed illegal by the Maine Harbormasters Association, and since then I can't recall seeing information about another solution. As far as I know, the Army Corps is evaluating UNE's application without benefit of the local knowledge that a harbormaster would normally provide.

1. Do you have any idea how far along the Army Corps is in their review, and when they might reach a determination?
2. If the Army Corps declines to issue a permit, what happens then?

It seems to me this application is in some sort of limbo. It was submitted to the City more than eight months ago, but has yet to appear on a Planning Board agenda. Four months before UNE even submitted the application, the university threatened to sue Biddeford if the pier location is not approved exactly as submitted. Existing mooring owners have threatened litigation if their moorings are moved, yet they must be moved for UNE to build the pier as outlined in the current application. The City Manager silenced the harbormasters before securing a back-up plan, but he has since resigned and is leaving in two months, effectively leaving this crucial question for others to solve. Last, I don't see how the Army Corps can issue a permit without having in hand the local knowledge of the river that experts like a harbormaster would normally provide.

The situations seems complex and confusing. I recognize that consultation with the City Attorney and the City Council may be required before you can answer. If you can get back to me at some point with clarification, that would be most appreciated. I suggest also that when you have the answers, the "What happens next?" section of the FAQ page for this project might need to be updated.

Thank you, Mayor Grohman. I conclude by thanking you and the City Council for all previous strong statements of support for openness and transparency in the conduct of City business.

Sincerely
John Scahfer

Whitten, Nan

From:	Hills Beach John <hillsbeachjohn@yahoo.com>
Sent:	Monday, February 17, 2025 12:16 PM
To:	Grohman, Martin
Cc:	LaFountain, Liam; Lessard, Marc; Ortiz, Doris; Emhiser, William; Whiting, Scott; Beaupre, Rogerp; Gross, Neva; dylyan.doughty@biddefordmaine.org; Belanger, Norman; Center, Harry; Planning Board; srichelieu@metln.org; dmendros@metln.org; ggraham@pressherald.com; newsdesk@sacobaynews.com; Randy Seaver
Subject:	Question about process on the UNE pier application

Caution: This is an external email. Please take care when clicking links or opening attachments. When in doubt, contact the IT Department

Good afternoon, Mayor Grohman.

I have a few questions about process, in regard to UNE's proposal to build a new pier.

Many applicants have a difficult time proposing a small dock or structure, or some minor alteration on their riverfront property, to the Saco River Corridor Commission. Often the applicant must endure several meetings before a permit is granted. Some would say that the SRCC is notorious for making people really sweat before they are granted a permit.

It was a surprise to many last summer when UNE's proposal for a pier, a major intrusion into the river costing several million dollars, sailed through in one meeting. Also, it was alarming that Biddeford's SRCC representative abstained from the voting, and thus Biddeford citizens were unrepresented in the discussion and in the vote on this major proposal. Some questions:

1. Why did he abstain from voting?
2. Did the City Manager know ahead of time that he would abstain?
3. If the manager knew he would abstain, why didn't Biddeford's alternate representative attend the meeting and provide us with appropriate representation?

As to where UNE's application stands now, on the City website it states that UNE can seek review by all non-City review agencies/authorities. "Upon the completion of those processes, the local review processes will begin."

I can't vouch for the veracity of this information, but I have been told that the U.S. Army Corps of Engineers will not issue a permit if they don't have "sign off" from the harbormaster. Our harbormaster has been ordered not to comment on the application. The City Manager's intent to hire a temporary harbormaster was deemed illegal by the Maine Harbormasters Association, and since then I can't recall seeing information about another solution. As far as I know, the Army Corps is evaluating UNE's application without benefit of the local knowledge that a harbormaster would normally provide.

1. Do you have any idea how far along the Army Corps is in their review, and when they might reach a determination?
2. If the Army Corps declines to issue a permit, what happens then?

It seems to me this application is in some sort of limbo. It was submitted to the City more than eight months ago, but has yet to appear on a Planning Board agenda. Four months before UNE even submitted the application, the university threatened to sue Biddeford if the pier location is not approved exactly as submitted. Existing mooring owners have threatened litigation if their moorings are moved, yet they must be moved for UNE to build the pier as outlined in the current application. The City Manager silenced the harbormasters before securing a back-up plan, but he has since resigned and is leaving in two months, effectively leaving this crucial question for others to solve. Last, I don't see how the Army Corps can issue a permit without having in hand the local knowledge of the river that experts like a harbormaster would normally provide.

The situations seems complex and confusing. I recognize that consultation with the City Attorney and the City Council may be required before you can answer. If you can get back to me at some point with clarification, that would be most appreciated. I suggest also that when you have the answers, the "What happens next?" section of the FAQ page for this project might need to be updated.

Thank you, Mayor Grohman. I conclude by thanking you and the City Council for all previous strong statements of support for openness and transparency in the conduct of City business.

Sincerely
John Scahfer

Whitten, Nan

From: Kevin Mcmanus <kjmcmanus@verizon.net>
Sent: Monday, February 3, 2025 11:44 AM
To: Hills Beach John; editor@inthecourier.com; Randy Seaver; newsdesk@sacobaynews.com; desk@newscentermaine.com; srichelieu@metln.org; wmtw@wmtw.com; tvmail@wgme.com; ggraham@pressherald.com; dmendros@metln.org; donovan.lynch@newscentermaine.com; caroline.lecour@newscentermaine.com; cfox@metln.org; erussell@pressherald.com
Cc: Planning Board; attorney.general@maine.gov
Subject: Re: UNE trying to stifle release of federal documents

Caution: This is an external email. Please take care when clicking links or opening attachments. When in doubt, contact the IT Department

John - Great job on the news release - I too have become suspicious of the reluctance (stonewalling) of the University in not providing full access to a public document requesting public funds for a project to build a pier in public waterway that impact the general public in the state of Maine.
I believe, up to this point , UNE has been in the past a good neighbor. I am hopeful your request, supported by myself and others, will not be the cause of the favorable perception of our neighbor. A continuation of the withholding of these documents will change the opinion of many Hills Beach residents from a "good neighbor" to a "bully university " intent on demanding they can do what they want, where they want, when they want- with PUBLIC funds being used to construct a PRIVATE PIER in PUBLIC waterways !!!!

As a resident of Hills Beach I appreciate your efforts to seek information on this project that will impact our community for the life of the Saco River !!!!

Sent from the all new AOL app for iOS

On Monday, February 3, 2025, 9:00 AM, Hills Beach John <hillsbeachjohn@yahoo.com> wrote:

February 3, 2025

UNE trying to stifle release of federal documents

PRESS CONTACT: John Schafer, 207-294-2410, hillsbeachjohn@yahoo.com

(Biddeford, Maine) Although the University of New England (UNE) asked the National Institute of Standards and Technology (NIST) for $3,465,000 to build a permanent pier on the Saco River, it doesn't want the media, Biddeford/Saco residents or U.S. taxpayers looking at the application that secured the funds.

On Tuesday, January 21 the former chairman of Biddeford's Harbor Commission, John Schafer, wrote to UNE President James Herbert, asking him to release a copy of the

application the university submitted to NIST. Herbert did not reply. (*Copies of 2 Schafer emails to Herbert, below.)* Schafer then received a phone call from one of Herbert's underlings, who tried to persuade Schafer that he did not need to see the application, while also protesting that the university is "not required" to release it. At Schafer's request he reluctantly agreed to ask about permission to release the application and said he'd be back in touch. The official never got back to Schafer with an answer.

"It's obvious that UNE's president directed the employee to try and shut me up," Schafer said. "I am undeterred. In that application UNE mostly likely made representations to the feds about the permitting process in Biddeford and in Maine. Let's see what they wrote. Also, UNE has never once mentioned national security concerns attached to their proposal. If a federal agency receives an application for federal funds and national security does not factor in, that is a public document."

Schafer commended Biddeford City Manager Jim Bennett and Mayor Martin Grohman for informing UNE last year that the location of the proposed pier is not in any way approved by the city. Bennett wrote that the city intends to conduct a comprehensive regulatory review that is open to public participation and thoroughly transparent. Schafer said the U.S. Army Corps of Engineers has not issued a permit for the proposed pier, and he expects Biddeford's planning board to review an application from UNE sometime in 2025.

"The application filed with NIST could very well affect Biddeford's regulatory process, but UNE doesn't want it released to me, to Biddeford, or to Saco. Luckily freedom of information laws exist to deal with this type of obstruction," Schafer said.

2 Schafer emails to James Herbert, President, University of New England:

On Tuesday, January 21, 2025 at 02:03:11 PM EST, Hills Beach John <hillsbeachjohn@yahoo.com> wrote:
Dear President Herbert,
I hope you had a restful holiday season, and I expect that you are already well on your way to another happy and productive year leading the University of New England.
I think it is a reasonable to assume that at some point in 2025, UNE's application for a new marine sciences research pier will reach the Biddeford Planning Board. I have a simple request for which the following points provide proper context:

1. In February, your attorney wrote to the City of Biddeford that, "UNE cherishes its relationship with the City and its people and only wishes to continue to be a valuable member of the community."
2. In July, your spokesperson told the Portland Press Herald that, "UNE has proceeded in good faith and with full transparency."
3. In August, Biddeford's city manager James Bennett wrote to UNE to confirm that the City of Biddeford has "in no way" approved a location for the new pier.
4. Mr. Bennett also wrote that regulatory review would be fully transparent and open to public participation.
5. In October, Mayor Martin Grohman wrote to city residents and confirmed that Biddeford indeed will indeed perform appropriate regulatory review of the application.
6. Throughout 2024, I received several direct email messages from Biddeford and Saco city councilors expressing strong support for openness and full transparency in the regulatory process.

UNE applied for and was approved for federal funding for its pier project. Since all parties appear to be unified in their commitment to full transparency, I would like to request that the university provide to both the City of Saco and the City of Biddeford a copy of the full application that UNE submitted to federal authorities to secure federal funding.

I presume the application includes representations about pier location and the process of securing local, state and federal permits. Obviously that information is directly pertinent to the permitting process that will take place in Biddeford this year, and therefore it is vital that the public have access to any and all representations about the location of the proposed pier.

As mentioned, the request is easy to satisfy and I'm sure both cities would gladly load the information onto their websites, to the benefit of their residents. I look forward to your reply, and thank you very much.

Sincerely,
JS
John Schafer
Hills Beach, Biddeford

----- Forwarded Message -----
From: Hills Beach John <hillsbeachjohn@yahoo.com>
To: jherbert1@une.edu <jherbert1@une.edu>
Sent: Friday, January 24, 2025 at 05:07:46 PM EST
Subject: Re: Completing the public record: UNE pier

Dear President Herbert,

The business week has drawn to a close and I have no reply from you. Several days after making the simplest of requests, I deduce that you are resolved not to reply.

I did get a phone call from one of your lieutenants, who pleasantly explained to me that I could obtain alternate or distilled versions of the application from various sources. Although I appreciated the attempt to be helpful, his suggestion was off point. The public needs access to the *exact* application that was filed with federal authorities to seek taxpayer funding. When I asked yet again for that to be released, his reasons for stonewalling were basically, "I don't have permission" and "We are not required to release it."

He argued that there's nothing in the application that can't be found in other places. That is welcome news, because it means that there are no national security concerns attached to this application. Therefore it is a simple matter for you, as President of the university, to give your lieutenant permission to release a PDF of the application to me, to Biddeford, and to Saco. Consequently, I respectfully renew my request that UNE release the document.

Speaking about the pier to the Portland Press Herald, Sarah Delage referenced "good faith" and "full transparency" as she described UNE's community engagement efforts. I am prepared to launch a laborious FOIA process if the university continues to rely on

the excuse that you are not required to release the application. However, I think it would be so much easier to avoid all that.

As you know, a local reporter revealed that the FBI had been interviewing people about the application process for the proposed research pier. I know his report was accurate, because I was one of those interviewed. Please allow me to gently suggest that given the history of this project, it would be wise at this point to refer back to the guiding principles of good faith and full transparency, as invoked by Ms. Delage. Please release the application, so that Biddeford and Saco may post the document on their websites.

In closing, I respectfully request that all future communications between UNE and me occur in writing, rather than in phone calls. It is important that the record be clear and unambiguous and not subject to flawed interpretation, deliberate misrepresentation or eventually, foggy memories. Thank you for your time, and have a great weekend.

Sincerely,

John Schafer
Hills Beach, Biddeford

Whitten, Nan

From: Hills Beach John <hillsbeachjohn@yahoo.com>
Sent: Monday, February 3, 2025 9:01 AM
To: editor@inthecourier.com; Randy Seaver; newsdesk@sacobaynews.com; desk@newscentermaine.com; srichelieu@metln.org; wmtw@wmtw.com; tvmail@wgme.com; ggraham@pressherald.com; dmendros@metln.org; donovan.lynch@newscentermaine.com; caroline.lecour@newscentermaine.com; cfox@metln.org; erussell@pressherald.com
Cc: Planning Board; attorney.general@maine.gov
Subject: UNE trying to stifle release of federal documents

Caution: This is an external email. Please take care when clicking links or opening attachments. When in doubt, contact the IT Department

February 3, 2025

UNE trying to stifle release of federal documents

PRESS CONTACT: John Schafer, 207-294-2410, hillsbeachjohn@yahoo.com

(Biddeford, Maine) Although the University of New England (UNE) asked the National Institute of Standards and Technology (NIST) for $3,465,000 to build a permanent pier on the Saco River, it doesn't want the media, Biddeford/Saco residents or U.S. taxpayers looking at the application that secured the funds.

On Tuesday, January 21 the former chairman of Biddeford's Harbor Commission, John Schafer, wrote to UNE President James Herbert, asking him to release a copy of the application the university submitted to NIST. Herbert did not reply. (*Copies of 2 Schafer emails to Herbert, below.)* Schafer then received a phone call from one of Herbert's underlings, who tried to persuade Schafer that he did not need to see the application, while also protesting that the university is "not required" to release it. At Schafer's request he reluctantly agreed to ask about permission to release the application and said he'd be back in touch. The official never got back to Schafer with an answer.

"It's obvious that UNE's president directed the employee to try and shut me up," Schafer said. "I am undeterred. In that application UNE mostly likely made representations to the feds about the permitting process in Biddeford and in Maine. Let's see what they wrote. Also, UNE has never once mentioned national security concerns attached to their proposal. If a federal agency receives an application for federal funds and national security does not factor in, that is a public document."

Schafer commended Biddeford City Manager Jim Bennett and Mayor Martin Grohman for informing UNE last year that the location of the proposed pier is not in any way approved by the city. Bennett wrote that the city intends to conduct a comprehensive regulatory review that is open to public participation and thoroughly transparent. Schafer said the U.S. Army Corps of Engineers has not issued a permit for the proposed pier, and he expects Biddeford's planning board to review an application from UNE sometime in 2025.

"The application filed with NIST could very well affect Biddeford's regulatory process, but UNE doesn't want it released to me, to Biddeford, or to Saco. Luckily freedom of information laws exist to deal with this type of obstruction," Schafer said.

2 Schafer emails to James Herbert, President, University of New England:

On Tuesday, January 21, 2025 at 02:03:11 PM EST, Hills Beach John <hillsbeachjohn@yahoo.com> wrote:
Dear President Herbert,
I hope you had a restful holiday season, and I expect that you are already well on your way to another happy and productive year leading the University of New England.
I think it is a reasonable to assume that at some point in 2025, UNE's application for a new marine sciences research pier will reach the Biddeford Planning Board. I have a simple request for which the following points provide proper context:

1. In February, your attorney wrote to the City of Biddeford that, "UNE cherishes its relationship with the City and its people and only wishes to continue to be a valuable member of the community."
2. In July, your spokesperson told the Portland Press Herald that, "UNE has proceeded in good faith and with full transparency."
3. In August, Biddeford's city manager James Bennett wrote to UNE to confirm that the City of Biddeford has "in no way" approved a location for the new pier.
4. Mr. Bennett also wrote that regulatory review would be fully transparent and open to public participation.
5. In October, Mayor Martin Grohman wrote to city residents and confirmed that Biddeford indeed will indeed perform appropriate regulatory review of the application.
6. Throughout 2024, I received several direct email messages from Biddeford and Saco city councilors expressing strong support for openness and full transparency in the regulatory process.

UNE applied for and was approved for federal funding for its pier project. Since all parties appear to be unified in their commitment to full transparency, I would like to request that the university provide to both the City of Saco and the City of Biddeford a copy of the full application that UNE submitted to federal authorities to secure federal funding.

I presume the application includes representations about pier location and the process of securing local, state and federal permits. Obviously that information is directly pertinent to the permitting process that will take place in Biddeford this year, and therefore it is vital that the public have access to any and all representations about the location of the proposed pier.

As mentioned, the request is easy to satisfy and I'm sure both cities would gladly load the information onto their websites, to the benefit of their residents. I look forward to your reply, and thank you very much.

Sincerely,
JS
John Schafer
Hills Beach, Biddeford

----- Forwarded Message -----
From: Hills Beach John <hillsbeachjohn@yahoo.com>
To: jherbert1@une.edu <jherbert1@une.edu>

Sent: Friday, January 24, 2025 at 05:07:46 PM EST
Subject: Re: Completing the public record: UNE pier

Dear President Herbert,

The business week has drawn to a close and I have no reply from you. Several days after making the simplest of requests, I deduce that you are resolved not to reply.

I did get a phone call from one of your lieutenants, who pleasantly explained to me that I could obtain alternate or distilled versions of the application from various sources. Although I appreciated the attempt to be helpful, his suggestion was off point. The public needs access to the *exact* application that was filed with federal authorities to seek taxpayer funding. When I asked yet again for that to be released, his reasons for stonewalling were basically, "I don't have permission" and "We are not required to release it."

He argued that there's nothing in the application that can't be found in other places. That is welcome news, because it means that there are no national security concerns attached to this application. Therefore it is a simple matter for you, as President of the university, to give your lieutenant permission to release a PDF of the application to me, to Biddeford, and to Saco. Consequently, I respectfully renew my request that UNE release the document.

Speaking about the pier to the Portland Press Herald, Sarah Delage referenced "good faith" and "full transparency" as she described UNE's community engagement efforts. I am prepared to launch a laborious FOIA process if the university continues to rely on the excuse that you are not required to release the application. However, I think it would be so much easier to avoid all that.

As you know, a local reporter revealed that the FBI had been interviewing people about the application process for the proposed research pier. I know his report was accurate, because I was one of those interviewed. Please allow me to gently suggest that given the history of this project, it would be wise at this point to refer back to the guiding principles of good faith and full transparency, as invoked by Ms. Delage. Please release the application, so that Biddeford and Saco may post the document on their websites.

In closing, I respectfully request that all future communications between UNE and me occur in writing, rather than in phone calls. It is important that the record be clear and unambiguous and not subject to flawed interpretation, deliberate misrepresentation or eventually, foggy memories. Thank you for your time, and have a great weekend.

Sincerely,

John Schafer
Hills Beach, Biddeford

Whitten, Nan

From: Hills Beach John <hillsbeachjohn@yahoo.com>
Sent: Wednesday, January 29, 2025 10:39 AM
To: srichelieu@metln.org; Randy Seaver; editor@inthecourier.com; dmendros@metln.org; desk@newscentermaine.com; caroline.lecour@newscentermaine.com; wmtw@wmtw.com; tvmail@wgme.com; donovan.lynch@newscentermaine.com; ggraham@pressherald.com; newsdesk@sacobaynews.com
Cc: Planning Board; attorney.general@maine.gov
Subject: UNE pier: Army Corps, regulatory update

Caution: This is an external email. Please take care when clicking links or opening attachments. When in doubt, contact the IT Department

Good morning.

After her hiatus to work on emergency response operations for Hurricane Helene, I was notified last week by Jana Jacobson at the U.S. Army Corps of Engineers that she has returned as Project Manager on UNE pier review. She has confirmed that the Corps has not issued a permit to the university, and that project review is ongoing.

Community members here in Biddeford recently produced a new video (https://youtu.be/U29T_WrNEWE) and sent it to Ms. Jacobson for use in the review. The video invokes training and education that the Army Corps provides to all Harbor Masters in Maine and elsewhere. The USACE manual, Guide for Permit Applications, requires the consideration of:

"the practical use of reasonable alternative locations and methods to accomplish the objective of the proposed activity."

It is reasonable to assume that given the unusual circumstances to date in this particular regulatory review, alternative locations and methods have yet to be investigated.

Have a great day.

John Schafer
Hills Beach, Biddeford

Whitten, Nan

From: Hills Beach John <hillsbeachjohn@yahoo.com>
Sent: Friday, January 24, 2025 5:08 PM
To: jherbert1@une.edu
Cc: Bennett, James; Grohman, Martin; jbohenko@sacomaine.org; jmacphail@sacomaine.org; Center, Harry; Planning Board
Subject: Re: Completing the public record: UNE pier

Caution: This is an external email. Please take care when clicking links or opening attachments. When in doubt, contact the IT Department

Dear President Herbert,

The business week has drawn to a close and I have no reply from you. Several days after making the simplest of requests, I deduce that you are resolved not to reply.

I did get a phone call from one of your lieutenants, who pleasantly explained to me that I could obtain alternate or distilled versions of the application from various sources. Although I appreciated the attempt to be helpful, his suggestion was off point. The public needs access to the *exact* application that was filed with federal authorities to seek taxpayer funding. When I asked yet again for that to be released, his reasons for stonewalling were basically, "I don't have permission" and "We are not required to release it."

He argued that there's nothing in the application that can't be found in other places. That is welcome news, because it means that there are no national security concerns attached to this application. Therefore it is a simple matter for you, as President of the university, to give your lieutenant permission to release a PDF of the application to me, to Biddeford, and to Saco. Consequently, I respectfully renew my request that UNE release the document.

Speaking about the pier to the Portland Press Herald, Sarah Delage referenced "good faith" and "full transparency" as she described UNE's community engagement efforts. I am prepared to launch a laborious FOIA process if the university continues to rely on the excuse that you are not required to release the application. However, I think it would be so much easier to avoid all that.

As you know, a local reporter revealed that the FBI had been interviewing people about the application process for the proposed research pier. I know his report was accurate, because I was one of those interviewed. Please allow me to gently suggest that given the history of this project, it would be wise at this point to refer back to the guiding principles of good faith and full transparency, as invoked by Ms. Delage. Please release the application, so that Biddeford and Saco may post the document on their websites.

In closing, I respectfully request that all future communications between UNE and me occur in writing, rather than in phone calls. It is important that the record be clear and unambiguous and not subject to flawed interpretation, deliberate misrepresentation or eventually, foggy memories. Thank you for your time, and have a great weekend.

Sincerely,

John Schafer
Hills Beach, Biddeford

On Tuesday, January 21, 2025 at 02:03:11 PM EST, Hills Beach John <hillsbeachjohn@yahoo.com> wrote:

Dear President Herbert,

I hope you had a restful holiday season, and I expect that you are already well on your way to another happy and productive year leading the University of New England.

I think it is a reasonable to assume that at some point in 2025, UNE's application for a new marine sciences research pier will reach the Biddeford Planning Board. I have a simple request for which the following points provide proper context:

1. In February, your attorney wrote to the City of Biddeford that, "UNE cherishes its relationship with the City and its people and only wishes to continue to be a valuable member of the community."

2. In July, your spokesperson told the Portland Press Herald that, "UNE has proceeded in good faith and with full transparency."

3. In August, Biddeford's city manager James Bennett wrote to UNE to confirm that the City of Biddeford has "in no way" approved a location for the new pier.

4. Mr. Bennett also wrote that regulatory review would be fully transparent and open to public participation.

5. In October, Mayor Martin Grohman wrote to city residents and confirmed that Biddeford indeed will indeed perform appropriate regulatory review of the application.

6. Throughout 2024, I received several direct email messages from Biddeford and Saco city councilors expressing strong support for openness and full transparency in the regulatory process.

UNE applied for and was approved for federal funding for its pier project. Since all parties appear to be unified in their commitment to full transparency, I would like to request that the

university provide to both the City of Saco and the City of Biddeford a copy of the full application that UNE submitted to federal authorities to secure federal funding.

I presume the application includes representations about pier location and the process of securing local, state and federal permits. Obviously that information is directly pertinent to the permitting process that will take place in Biddeford this year, and therefore it is vital that the public have access to any and all representations about the location of the proposed pier.

As mentioned, the request is easy to satisfy and I'm sure both cities would gladly load the information onto their websites, to the benefit of their residents. I look forward to your reply, and thank you very much.

Sincerely,

JS

John Schafer
Hills Beach, Biddeford

Whitten, Nan

From: Hills Beach John <hillsbeachjohn@yahoo.com>
Sent: Tuesday, January 21, 2025 2:03 PM
To: jherbert1@une.edu
Cc: Bennett, James; Grohman, Martin; jbohenko@sacomaine.org; jmacphail@sacomaine.org; Center, Harry; Planning Board
Subject: Completing the public record: UNE pier

Caution: This is an external email. Please take care when clicking links or opening attachments. When in doubt, contact the IT Department

Dear President Herbert,

I hope you had a restful holiday season, and I expect that you are already well on your way to another happy and productive year leading the University of New England.

I think it is a reasonable to assume that at some point in 2025, UNE's application for a new marine sciences research pier will reach the Biddeford Planning Board. I have a simple request for which the following points provide proper context:

1. In February, your attorney wrote to the City of Biddeford that, "UNE cherishes its relationship with the City and its people and only wishes to continue to be a valuable member of the community."

2. In July, your spokesperson told the Portland Press Herald that, "UNE has proceeded in good faith and with full transparency."

3. In August, Biddeford's city manager James Bennett wrote to UNE to confirm that the City of Biddeford has "in no way" approved a location for the new pier.

4. Mr. Bennett also wrote that regulatory review would be fully transparent and open to public participation.

5. In October, Mayor Martin Grohman wrote to city residents and confirmed that Biddeford indeed will indeed perform appropriate regulatory review of the application.

6. Throughout 2024, I received several direct email messages from Biddeford and Saco city councilors expressing strong support for openness and full transparency in the regulatory process.

UNE applied for and was approved for federal funding for its pier project. Since all parties appear to be unified in their commitment to full transparency, I would like to request that the university provide to both the City of Saco and the City of Biddeford a copy of the full application that UNE submitted to federal authorities to secure federal funding.

I presume the application includes representations about pier location and the process of securing local, state and federal permits. Obviously that information is directly pertinent to the permitting process that will take place in Biddeford this year, and therefore it is vital that the public have access to any and all representations about the location of the proposed pier.

As mentioned, the request is easy to satisfy and I'm sure both cities would gladly load the information onto their websites, to the benefit of their residents. I look forward to your reply, and thank you very much.

Sincerely,

JS

John Schafer
Hills Beach, Biddeford

Whitten, Nan

From: Hills Beach John <hillsbeachjohn@yahoo.com>
Sent: Wednesday, December 11, 2024 11:53 AM
To: cenae-r-me@usace.army.mil; jana.l.jacobson@usace.army.mil; dmrcoastalprogram_fc@maine.gov; karen.l.foust@maine.gov; attorney.general@maine.gov; dgranata@maineharbormasters.org; Planning Board; Fecteau, Roby
Cc: aarondana@wabanaki.com; cheri@srcc-maine.org; kevin.martin@maine.gov; marybeth.richardson@maine.gov; melanie.loyzim@maine.gov; david.madore@maine.gov
Subject: emails from commercial fisherman: UNE pier

Good morning. Two major issues in the UNE pier controversy are transparency by government officials/UNE and the inclusion in proposal review of data/knowledge from those who know the river best. In the last 10 days I was copied to an email exchange between Captain Shawn Tibbetts, a commercial fisherman, and Biddeford's city manager Jim Bennett. I feel the discussion is significant enough that I should forward to interested parties. Their dialogue is just below. Have a great day.

John Schafer
Hills Beach, Biddeford

On Mon, Dec 2, 2024, 5:01 PM Capt. Shawn Tibbetts <captshawntibbetts@gmail.com> wrote:

Dear Mr. Bennett, City Manager

I find it very concerning I'm just hearing now through social media that UNE plans to build a pier opposite their marine science center. I have owned my mooring for over ten years, at a location that will be **too close** to the proposed pier, limiting access to my mooring and UNE's access to their pier. As a commercial fisherman my livelihood is already hard enough.

It is also my understanding that a mooring owner who has an assigned mooring location cannot be legally forced to a new location. The only reason a mooring can be legally moved without his consent would be that the owner was not current with his mooring fees, or the mooring became a hazard to navigation. I know the Harbor Masters Association can site examples where municipalities have tried to move moorings without the owner's consent which have resulted in a lawsuit. In almost every case, the court has ruled for the mooring owner and against the municipality.

I can only ask why there hasn't been discussion with the entire public to determine the best location for the UNE pier.

If the City of Biddeford tries to assist UNE in the removal or relocation of moorings to accommodate the new pier, Biddeford will face one or more similar lawsuits, and I promise you I will be one of them. You're not moving my mooring.

I believe that the odds of Biddeford losing in court are pretty good, because of the way you and the university have conducted the pier review process:

- Biddeford's harbormaster has been silenced because he was suggesting an alternate location.
- Whenever it can, UNE tries to keep the public from participating in the site review process. For example, (1) there have been no public discussions regarding the pier and (2) the site survey conducted by the department of Submerged Lands was kept out of public view. This is no accident.
- No local or state agency has attempted to review the alternate location suggested by the harbormaster.

I think it is very possible to argue in court that the City and UNE are colluding to get whatever UNE wants to include the illegal removal of private moorings. As I stated previously, you're not moving my mooring and I like my chances of winning the lawsuit.

Please share this letter with the Mayor, Council and City Attorney.

City leadership and the general public need to be aware of the possible litigation because of the way you have been conducting business.

Sincerely,

Capt Shawn J Tibbetts

From:james.bennett@biddefordmaine.org

To:Capt. Shawn Tibbetts

Cc:Grohman, Martin,LaFountain, Liam,Center, Harry,hillsbeachjohn@yahoo.com,Contact all Councilors

Tue, Dec 3 at 8:33 AM

Captain Tibbetts,

Thank you for the email and I am responding accordingly. Let me provide you some factual information regarding the current UNE Pier application. The City has not approved nor have they had any formal hearings, any review or taking any action on the application or the merits of the application. Those are yet to occur. The public, including you, will be given the opportunity to participate in the processes.

I would encourage you to read some of the information we have provided on the City website. You will find that information FAQs • Are the City Manager's decisions allowing UNE.

In addition, please find the following factual information regarding the application.

- On May 22, 2024, I notified the Harbormaster that his public and private actions prior to the submittal of the application by UNE has demonstrated a clear, concise and absolute decision made by him regarding the location of the pier. Like other administrative hearing authorities of any government agency, he is required to consider the application based on the merits of the application and without any appearance of bias. On a number of occasions, public and privately, he made it clear that he would not consider the location requested.
- On the same day, I notified the Mayor, City Council, the Harbor Commission and UNE of the same decision.
- I engaged the services of an independent consulting services (TEC Associates) with expertise in pier design, application and permitting in Maine to evaluate one specific portion of our City Code, namely 74-35, subsection (c) 1-10. This section evaluates whether the applicant has complied with very specific submittal requires. In essence, is the application complete? Their initial review found it was not complete. Once that was corrected, I issued an Aug 19, 2024 letter that informed them of the same.
- In that Aug 19, 2024 letter, they were given permission to proceed with applications for all the necessary permits required beyond the City permits. Once they have concluded those processes, they will return to the City for the review by the required hearing authorities. I also made stated, 'let me empathically state that this communication does not in any form, imply that the City has in any way made a determination that the location submitted has been approved.'
- UNE attorney has contended that the former Harbormaster approved the location desired in 2015. I have informed them that I disagree. The City continues to operate that the location has not been approved by any body or agent of the City.
- At no time, have I stepped outside of my role/responsibility as the City Manager. I have no role in considering the merits of the location. I have made the decision to protect the City by removing the current Harbormaster from the review for the reasons noted above. Failure to act given the knowledge I had of his actions would have opened the City up for adverse outcomes, including the possibility that UNE preferred location would have been awarded because of the bias process.

- Each of the documents I have mentioned are public and available for inspection.
- I encourage you to activity participate in the public review processes that are ongoing and the ones yet to occur in order to be most informed and have your concerns addressed. Any impact on your mooring will be duly considered by the various reviewing agencies (and/or agencies requiring notification), including:
  - Maine Historic Preservation Commission
  - Aroostook Band of Micmac
  - Passamaquoddy Tribe of Indians: Pleasant Point, Indian Township
  - Houlton Band of Maliseet Indians
  - Penobscot Indian Nation
  - Army Corps of Engineers
  - Maine Department of Environmental Protection
  - Saco River Corridor Commission
  - Biddeford Code Enforcement

Please reach out to me if you have any further questions or clarifications.

James A. Bennett

City Manager

Biddeford, Maine 04005

----- Forwarded Message -----

From: Capt. Shawn Tibbetts <captshawntibbetts@gmail.com>

To: "james.bennett@biddefordmaine.org" <james.bennett@biddefordmaine.org>

Cc: "martin.grohman@biddefordmaine.org" <martin.grohman@biddefordmaine.org>; "liam.lafountain@biddefordmaine.org" <liam.lafountain@biddefordmaine.org>; "hcenter@woodedlaw.com" <hcenter@woodedlaw.com>; "hillsbeachjohn@yahoo.com" <hillsbeachjohn@yahoo.com>

Sent: Wednesday, December 11, 2024 at 06:53:40 AM EST

Subject: Re: My commercial mooring

Mr. Bennett.

I understand why you try to defend your actions, but you're missing the major point. There is no substitute for the knowledge gained from the practical experience of someone with over 40 years on the Saco River. The river doesn't flow according to administrative rules and regulations, and that's why bureaucrats are not equipped to complete the most important part of this regulatory review.

The harbormaster has been removed, its done. But what you haven't done is replace his intimate knowledge of the river or implement a process that would require the consideration of real world data. Until you do, the regulatory review of this pier is flawed.

The email from city attorney Center proves my point. Filtered or incomplete information has led him to believe that the pier affects only two moorings. That is wrong. I can't blame the city attorney because he's working with the information he was given and that information does not show the entire picture. Yes, there are two moorings that fall directly under the footprint of the proposed pier. But there are ten more in the immediate vicinity around the pier that will prevent a vessel of significant size to reach its berth at the end of the pier.

Reality is that a 60-foot vessel is far bigger than any other boat now moored in that section of the river. Compared to its neighbors, that vessel is a monster. Navigating in and out of position alongside the new pier is going to be a nightmare unless the city moves more than two moorings. By my count a minimum of 6. A full outgoing tide creates eddies and surges in the area. That's the real challenge here, one that anyone sitting behind a desk pushing a mouse cannot grasp. You have to know every inch of the river to understand.

It's clear that UNE wants to pull the wool over the city's eyes, claiming the new pier requires the removal of only two moorings. I'll say it again, the pier and a 60-foot vessel will affect far more than two moorings….including mine.

Only someone with an intimate knowledge of the physical reality of the river can determine the best onshore location of the pier, one with sufficient water at mean low tide and one that minimizes the displacement of existing moorings. Nobody has done that yet. If you ram through the approval for UNE without those important steps, you leave the city exposed.

I'll close on a positive note. You write that the city has yet to conduct any hearings or review, it has not approved the pier in any way, and that when the UNE application is reviewed sometime in the future, it will be an open process in which the public can participate. That is a good thing and very significant news. If the city conducts an open process that welcomes data and knowledge supplied by those who actually know the river, then an honest outcome can be reached……and this pier controversy will end.

Capt Shawn Tibbetts

Whitten, Nan

From: Hills Beach John <hillsbeachjohn@yahoo.com>
Sent: Friday, December 6, 2024 2:47 PM
To: Planning Board
Subject: Fw: STATUS REPORT to Media: UNE pier application

----- Forwarded Message -----
From: Hills Beach John <hillsbeachjohn@yahoo.com>
To: Randy Seaver <randyseaver01@gmail.com>; Pressherald News <news@pressherald.com>; ggraham@pressherald.com <ggraham@pressherald.com>; ssharon@mainepublic.org <ssharon@mainepublic.org>; pvanallen@mainebiz.biz <pvanallen@mainebiz.biz>; newsdesk@sacobaynews.com <newsdesk@sacobaynews.com>; desk@newscentermaine.com <desk@newscentermaine.com>; wmtw@wmtw.com <wmtw@wmtw.com>; tvmail@wgme.com <tvmail@wgme.com>; srichelieu@metln.org <srichelieu@metln.org>; editor@inthecourier.com <editor@inthecourier.com>; dmendros@metln.org <dmendros@metln.org>; caroline.lecour@newscentermaine.com <caroline.lecour@newscentermaine.com>; donovan.lynch@newscentermaine.com <donovan.lynch@newscentermaine.com>
Cc: dmrcoastalprogram_fc@maine.gov <dmrcoastalprogram_fc@maine.gov>; cheri@srcc-maine.org <cheri@srcc-maine.org>; jana.l.jacobson@usace.army.mil <jana.l.jacobson@usace.army.mil>; melanie.loyzim@maine.gov <melanie.loyzim@maine.gov>; david.madore@maine.gov <david.madore@maine.gov>; kevin.martin@maine.gov <kevin.martin@maine.gov>; karen.l.foust@maine.gov <karen.l.foust@maine.gov>; marybeth.richardson@maine.gov <marybeth.richardson@maine.gov>; aarondana@wabanaki.com <aarondana@wabanaki.com>; cenae-r-me@usace.army.mil <cenae-r-me@usace.army.mil>; attorney.general@maine.gov <attorney.general@maine.gov>
Sent: Friday, December 6, 2024 at 01:20:10 PM EST
Subject: STATUS REPORT to Media: UNE pier application

As you know, the University of New England has proposed a new marine research pier on the Saco River. Thank you to those media folks who have reported on the story in 2024. The public has been well served by your coverage.

I'm pleased to report that I believe the City of Biddeford seems to have corrected course, and now may not permit the completion of a process in which regulators "look the other way" when considering how the physical characteristics of the Saco River --- in the *real* world --- affect proper onshore siting of the proposed pier. This is excellent news. I was copied to an email this week in which Biddeford's city manager wrote the following about UNE's application:

"The City has not approved nor have they had any formal hearings, any review or taking any action on the application or the merits of the application.

"UNE attorney has contended that the former Harbormaster approved the location desired in 2015. I have informed them that I disagree. The City continues to operate that the location has not been approved by any body or agent of the City."

It is worth remembering that four months before even submitting its application to the City and to other regulatory agencies, UNE's lawyer threatened to sue Biddeford if their pier location is not approved exactly as proposed. He wrote, "the location of the pier is a settled matter" and that, "UNE's patience has grown thin."

The only "settled matter" is that the city manager removed two personalities from the process, the harbormaster and the assistant harbormaster. That is done. What their removal did not change,

however, is that in this review process the City of Biddeford must replace their expertise with someone who knows every inch of the river as well as they do. That's the only way Biddeford will know if the proposed pier is properly sited. For instance, one major issue is the removal of existing moorings required by a huge pier and a 60-foot research vessel. Dan Chadbourne was Saco's harbormaster for about 20 years, and has a master's license from the U.S. Merchant Marine. Here's what he had to say recently about the practical reality of moorings in regard to UNE's application: https://youtu.be/Vp3KAG9Fyq0

As far as I know, no regulatory agency responsible for protecting navigation has yet to approve UNE's application. In his email this week, the city manager promised complete openness, and that the public "will be given the opportunity to participate in the process." If during this process "the physical reality of this river" is taken into proper consideration, then regulatory review will have integrity.

In summary, I resigned as Chairman of Biddeford's Harbor Commission in June because I believe this process needs complete transparency, and I need to be able to speak frankly. I have been encouraged by messages from the Mayor and certain City Councilors as they strongly endorsed the call for transparency. And judging by the city manager's email this week, it looks like full transparency, including full and accurate consideration of the physical reality of the river, may take place after all.

I have no idea as to the timing, but as we close out the year I would guess that the regulatory process in Biddeford might begin sometime in the first half of 2025.

I wish everyone a happy holiday season.

JS

John Schafer
Hills Beach, Biddeford

Whitten, Nan

From: mainemom20@yahoo.com
Sent: Monday, November 4, 2024 10:59 AM
To: Grohman, Martin; Bennett, James; LaFountain, Liam
Cc: jherbert1@une.edu; Planning Board; ggraham@pressherald.com; srichelieu@metln.org; newsdesk@sacobaynews.com; wmtw@wmtw.com; tvmail@wgme.com; desk@newscentermaine.com
Subject: Appreciation for Biddeford's decision to inspect UNE pier location

EXTERNAL: This email originated from outside of the City of Biddeford email system. Do not click links or open attachments unless you recognize the sender and know the content is safe.

After the newspaper reported this summer that Biddeford was raising the white flag and would not review UNE's pier proposal, I was relieved to learn that the city has *not* surrendered, and that the application will face appropriate analysis after all.

Also, the city manager needs to be congratulated for telling UNE very clearly that its pier is not yet approved, including the location. That sent a strong and very appropriate message that the city will consider the question of proper siting, as it should. Here are the questions I have:

1. What authority did a Biddeford city councilor have to contact UNE directly earlier this summer and work on pier design with them?
2. Did the council, the city manager or the mayor authorize or direct his contact with the university and his actions?
3. Did the city pay for the professional services needed to produce the diagram he represented as his own?
4. If not, did UNE pay for the diagram?
5. Did the city councilor himself pay for the diagram?
6. Late in the summer the city manager made it clear that Biddeford has not approved the pier location. I assume that means the city has not yet examined physical location. Then the mayor announced that the pier will undergo local review. Yet the councilor working with UNE claimed that there "needs to be a pretty significant outward pier" to get to a river depth of ten feet. What are his professional qualifications and credentials for reaching such a conclusion?
7. Does that city councilor speak officially for Biddeford? I'm not sure, but I don't think the application has even gone to the planning board yet.
8. If anything having to do with UNE comes before the city council, will that city councilor recuse himself from voting? He seems to be carrying UNE's water.
9. Everybody knows that people have been interviewed by the FBI. Have any city employees or elected officials been interviewed by the FBI in connection with this pier proposal?
10. Has any UNE employee been interviewed by the FBI?

I've copied James Herbert to this email in case he would like to speak for UNE and answer any of these questions.

Thank you.

Whitten, Nan

From: Hills Beach John <hillsbeachjohn@yahoo.com>
Sent: Monday, October 28, 2024 1:16 PM
To: Planning Board
Subject: Fw: Thank you for the call

EXTERNAL: This email originated from outside of the City of Biddeford email system. Do not click links or open attachments unless you recognize the sender and know the content is safe.

----- Forwarded Message -----
From: Hills Beach John <hillsbeachjohn@yahoo.com>
To: martin.grohman@biddefordmaine.org <martin.grohman@biddefordmaine.org>
Cc: ggraham@pressherald.com <ggraham@pressherald.com>; srichelieu@metln.org <srichelieu@metln.org>; newsdesk@sacobaynews.com <newsdesk@sacobaynews.com>
Sent: Sunday, October 27, 2024 at 06:51:36 PM EDT
Subject: Thank you for the call

Dear Mayor Grohman,

I got your voicemail earlier this week asking me to call you back and offering to update me on the regulatory process for the proposed marine research pier that UNE would like the City to approve.

I think it would be best that you and I do not do that by phone.

First of all, as I have stated before, I do not deserve special consideration and have never asked for it. Second, I resigned as Chair of the Harbor Commission in June specifically because I was dismayed that a lot of the public's business was being conducted behind closed doors and in personal conversations, inappropriately so in my opinion. I was very unhappy with what I considered to be improper fast-tracking. Early this year I began calling for full transparency in all aspects of this review of the pier. Everything about this application, including the determinants of onshore location, should be front and center, no secrets, and easily available for public inspection.

Therefore, I think it best that all communications on this issue should be in writing and part of the public record, and obviously a phone call is not. (Unless it is recorded, which I don't want to do because that just feels wrong.) So respectfully, I prefer to keep all communications in writing so that the public is privy to all that is said and done. In terms of my own written communications released to the public, the press and government officials, those are sprinkled with my personal opinions, naturally. But I also take great care to

make sure that any absolute statements I make are 100% accurate. I'm pretty sure I've used only factual material to date, but if you ever have any concerns, please let me know and I'll be happy to review anything at all for accuracy.

Thank you for the call, I appreciate the generous impulse that motivated it, and I thank you for announcing in your recent newsletter to Biddeford residents that the UNE pier proposal will indeed return to the City for regulatory review. With your guidance, I know that review will examine pier location and river depths, and it will be thorough and fair to the applicant and to Biddeford residents.

Sincerely,

John Schafer

Whitten, Nan

From: Alan Thibeault <athibeault@une.edu>
Sent: Friday, October 11, 2024 1:58 PM
To: Whitten, Nan
Cc: Gervais, George; Galbraith, David; Iriqat, Adi
Subject: RE: EXT: Marine Research Pier

EXTERNAL: This email originated from outside of the City of Biddeford email system. Do not click links or open attachments unless you recognize the sender and know the content is safe.
Nan, appreciate your sending this information along. When you get more, please continue to forward them.

I have offered to, or met with each one of the individuals, with the exception of Mr Buechs, who is new to the discussion. I will reach out to him soon to see if he would like to meet to discuss his concerns.

Thanks
AT

From: Whitten, Nan <Nan.Whitten@Biddefordmaine.org>
Sent: Monday, October 7, 2024 11:43 AM
To: Alan Thibeault <athibeault@une.edu>
Cc: Gervais, George <George.Gervais@biddefordmaine.org>; Galbraith, David <David.Galbraith@biddefordmaine.org>; Iriqat, Adi <adi.iriqat@biddefordmaine.org>
Subject: EXT: Marine Research Pier
Importance: High

This email originated from outside of UNE.

Good Morning Alan:

We have been receiving a fair amount of public comments on the proposed marine research pier. You are not copied on the majority of them so we are sharing them so that you will know what we are receiving. Please let us know if you have any questions.

nan

Whitten, Nan

From:	Kyle H. Noble <noblehouse@maine.rr.com>
Sent:	Monday, October 7, 2024 7:44 AM
To:	wmtw@wmtw.com; desk@newscentermaine.com; tvmail@wgme.com; ggraham@pressherald.com; dmendros@metln.org; editor@inthecourier.com; srichelieu@metln.org; Pressherald News; newsdesk@sacobaynews.com; ssharon@mainepublic.org; caroline.lecour@newscentermaine.com; donovan.lynch@newscentermaine.com; apmaine@ap.org
Cc:	Planning Board
Subject:	FW: Landfilled cars at Town Landing on Biddeford campus of UNE
Attachments:	TL UNE landfill.pdf; K315end slope bumper.JPG; K316end slope.JPG; KIMG1418.JPG; KIMG1421.JPG; KIMG1422.JPG; KIMG1423.JPG

EXTERNAL: This email originated from outside of the City of Biddeford email system. Do not click links or open attachments unless you recognize the sender and know the content is safe.

In the interest of deeper public discussion you are copied here of my recent query to Maine DEP regarding old landfill at the public Town Landing at UNE. This old contamination has devalued the utility of Town Landing. The public access rights at Town Landing were made part of a City Council order on 9/3/24 to relinquish them as an unrelated side effect to other proposed land transfer between the City and UNE. That Council order has been on the table since 9/3/24 when I and others spoke against it.

Kyle Noble
56 Hills Beach Road
Biddeford, ME
#207-468-5296

From: "Kyle H. Noble" <noblehouse@maine.rr.com>
Date: Saturday, October 5, 2024 at 9:08 AM
To: "Crockett, Peter G" <Peter.G.Crockett@maine.gov>, "Redmond, Christopher" <Christopher.Redmond@maine.gov>
Cc: "Bennett, James" <jbennett@Biddefordmaine.org>, Holly Hammond <hnass@une.edu>, "Olsen, Sam" <Sam.Olsen@NEWSCENTERmaine.com>, <acanfield@metln.org>, Martin Grohman <martin.grohman@biddefordmaine.org>, <liam.lafountain@biddefordmaine.org>, <Marc.Lessard@Biddefordmaine.org>, <doris.ortiz@Biddefordmaine.org>, "Belanger, Norman" <Norman.Belanger@Biddefordmaine.org>, Bill Emhiser <bill_emhiser@yahoo.com>
Subject: Landfilled cars at Town Landing on Biddeford campus of UNE

Hello Peter,

Is there any written field report for the landfill site inspections at University of New England conducted on April 23, 2024?

Before the April field inspection one of my 4/13/24 photos shows an exposed vehicle bumper and a yellow object near the Town Landing site. Subsequent removal of those items has exposed another vehicle part beneath the ground. Yesterday also revealed a third exposed vehicle part some distance from the first and possibly within the City's easement area for waterfront access.

Yesterday's shoreline photos show uncontained junk on the cove face at Town Landing. Is there a public document detailing the about-to-be in 2025 marsh restoration adjoining Town Landing? Since there have been recently active users of Town Landing will this shore be made more accessible for personal watercraft by some cleanup activity?

Thank you for your attention to these matters.

Kyle H. Noble
56 Hills Beach Road
Biddeford, ME
#207-468-5296

Whitten, Nan

From: Hills Beach John <hillsbeachjohn@yahoo.com>
Sent: Sunday, October 6, 2024 5:50 PM
To: Emhiser, William; bill_emhiser@yahoo.com
Cc: Center, Harry; LaFountain, Liam; Lessard, Marc; Ortiz, Doris; Emhiser, William; Whiting, Scott; roger.beaupre@biddefordmaine.org; Gross, Neva; dylyan.doughty@biddefordmaine.org; Belanger, Norman; Planning Board
Subject: UNE pier, Transparency, Ethics

EXTERNAL: This email originated from outside of the City of Biddeford email system. Do not click links or open attachments unless you recognize the sender and know the content is safe.

----- Forwarded Message -----
From: Bill Emhiser <bill_emhiser@yahoo.com>
To: Hills Beach John <hillsbeachjohn@yahoo.com>
Sent: **Wednesday, October 2,** 2024 at 02:45:11 PM EDT
Subject: Re: UNE's pier: are marketing objectives in play?

Not exactly ethical sending around a private email without my permission. Was going to call you later this afternoon to discuss, but will hold off for now.

Sent from my iPhone

##########

Dear Bill,

You are a gentleman. You have always treated me with respect, and that's why I have always treated you with respect. I will continue to do so. And with respect, I must tell you that your allegation of an ethical breach is way off the mark, and I reject it.

You are the City Councilor for my Ward. I voted for you. Any email that I receive from you discussing City business is a public document. In fact, it was not until you sent the email last Wednesday (above) that I noticed your August 6th email, with UNE pier diagrams that you produced, had been sent from a Yahoo address.

Maine law is crystal clear that non-governmental email addresses that elected officials use to conduct public business are subject to FOAA requests, just like their government-issued email addresses. No City employee or City Councilor is able to skirt sunshine laws by hiding communications about City business. You may want to check with City Attorney Center, who will confirm this for you.

I do not deserve special treatment, I did not ask for special treatment, and you did not ask me in writing or verbally to conceal our communications. Had you asked to send me official material as long as I kept it secret, I would have emphatically rejected the request.

Here's what I wrote to you, the Mayor, and the rest of the Council when I resigned as Chair of the Harbor Commission: "In recent months I have written about the importance of transparency and openness in decisions that affect Biddeford citizens, and I have been gratified by responses from the Mayor and several Councilors. These fundamental democratic principles are very important to me, and it has been a relief to have you confirm that they are just as important to you." And further, "You are the only ones who can intervene and insist upon complete transparency, an indispensable requirement when doing the people's business."

Since my resignation, I have freely communicated about the UNE pier with scores of Biddeford residents, with Biddeford officials, with Saco officials, with many state senators, many state representatives, the Attorney General, the Governor, state agencies, federal agencies, and the press. I will continue to do so. Each email I send to a public official about UNE's proposed pier is a public document, and each email I receive on the topic from a public official is a public document. The same is especially true for you, an elected official.

I have made my point.

During a phone conversation earlier this year, you rebuked me as follows. "It's too bad you don't have faith in your elected officials." I then wrote on July 3rd that you were mistaken, that I have faith in my elected officials, and that I appreciated the work you had been doing. Specifically I wrote, "I do have faith in my elected officials, particularly my Ward Councilor."

Last week I noted that to date, it appears the intent of this particular regulatory process is to avoid scrutiny of UNE's pier location, rather than to welcome it. The City of Biddeford appears deeply complicit in this lack of transparency, and I'm sorry to say that your use of the Yahoo address for transmitting documents --- and it's now apparent to me you wanted to keep the email secret --- has only made things worse. Shall we try for a fresh start?

I have the following questions.

1. This summer you had direct discussions with UNE and produced drawings of an alternate pier location, emailed to me on August 6th. When and how did your concern arise about a visual "impression that the docks are right up against the cliff?" What is the origin of that concern, and its relevance?
2. I have invited you, the other eight councilors, and a delegation of your choosing to get on the Saco River by boat and help prove that a substantial stretch of Saco River shoreline at UNE does in fact not have a depth of 10 feet just a couple feet offshore. Such proof would end this controversy instantly. Do you accept the invitation?

Please respond in writing, not with a phone call.

It's very late in the game, Bill. The normal review process has been corrupted by the City Manager and/or UNE, either separately or in collaboration. That has ensured that no regulatory authority has examined the question of the pier's onshore location. You and your fellow Councilors have the power to intervene and insist upon complete transparency, an indispensable requirement when doing the people's business. Or you can look the other way.

To repeat, you have always treated me with respect, and I appreciate it. Once again, thank you for your service to the people of Biddeford.

JS

John Schafer
Hills Beach, Biddeford

Whitten, Nan

From: Hills Beach John <hillsbeachjohn@yahoo.com>
Sent: Sunday, October 6, 2024 5:50 PM
To: Emhiser, William; bill_emhiser@yahoo.com
Cc: Center, Harry; LaFountain, Liam; Lessard, Marc; Ortiz, Doris; Emhiser, William; Whiting, Scott; roger.beaupre@biddefordmaine.org; Gross, Neva; dylyan.doughty@biddefordmaine.org; Belanger, Norman; Planning Board
Subject: UNE pier, Transparency, Ethics

EXTERNAL: This email originated from outside of the City of Biddeford email system. Do not click links or open attachments unless you recognize the sender and know the content is safe.

----- Forwarded Message -----
From: Bill Emhiser <bill_emhiser@yahoo.com>
To: Hills Beach John <hillsbeachjohn@yahoo.com>
Sent: **Wednesday, October 2**, 2024 at 02:45:11 PM EDT
Subject: Re: UNE's pier: are marketing objectives in play?

Not exactly ethical sending around a private email without my permission. Was going to call you later this afternoon to discuss, but will hold off for now.

Sent from my iPhone

##########

Dear Bill,

You are a gentleman. You have always treated me with respect, and that's why I have always treated you with respect. I will continue to do so. And with respect, I must tell you that your allegation of an ethical breach is way off the mark, and I reject it.

You are the City Councilor for my Ward. I voted for you. Any email that I receive from you discussing City business is a public document. In fact, it was not until you sent the email last Wednesday (above) that I noticed your August 6th email, with UNE pier diagrams that you produced, had been sent from a Yahoo address.

Maine law is crystal clear that non-governmental email addresses that elected officials use to conduct public business are subject to FOAA requests, just like their government-issued email addresses. No City employee or City Councilor is able to skirt sunshine laws by hiding communications about City business. You may want to check with City Attorney Center, who will confirm this for you.

I do not deserve special treatment, I did not ask for special treatment, and you did not ask me in writing or verbally to conceal our communications. Had you asked to send me official material as long as I kept it secret, I would have emphatically rejected the request.

Here's what I wrote to you, the Mayor, and the rest of the Council when I resigned as Chair of the Harbor Commission: "In recent months I have written about the importance of transparency and openness in decisions that affect Biddeford citizens, and I have been gratified by responses from the Mayor and several Councilors. These fundamental democratic principles are very important to me, and it has been a relief to have you confirm that they are just as important to you." And further, "You are the only ones who can intervene and insist upon complete transparency, an indispensable requirement when doing the people's business."

Since my resignation, I have freely communicated about the UNE pier with scores of Biddeford residents, with Biddeford officials, with Saco officials, with many state senators, many state representatives, the Attorney General, the Governor, state agencies, federal agencies, and the press. I will continue to do so. Each email I send to a public official about UNE's proposed pier is a public document, and each email I receive on the topic from a public official is a public document. The same is especially true for you, an elected official.

I have made my point.

During a phone conversation earlier this year, you rebuked me as follows. "It's too bad you don't have faith in your elected officials." I then wrote on July 3rd that you were mistaken, that I have faith in my elected officials, and that I appreciated the work you had been doing. Specifically I wrote, "I do have faith in my elected officials, particularly my Ward Councilor."

Last week I noted that to date, it appears the intent of this particular regulatory process is to avoid scrutiny of UNE's pier location, rather than to welcome it. The City of Biddeford appears deeply complicit in this lack of transparency, and I'm sorry to say that your use of the Yahoo address for transmitting documents --- and it's now apparent to me you wanted to keep the email secret --- has only made things worse. Shall we try for a fresh start?

I have the following questions.

1. This summer you had direct discussions with UNE and produced drawings of an alternate pier location, emailed to me on August 6th. When and how did your concern arise about a visual "impression that the docks are right up against the cliff?" What is the origin of that concern, and its relevance?
2. I have invited you, the other eight councilors, and a delegation of your choosing to get on the Saco River by boat and help prove that a substantial stretch of Saco River shoreline at UNE does in fact not have a depth of 10 feet just a couple feet offshore. Such proof would end this controversy instantly. Do you accept the invitation?

Please respond in writing, not with a phone call.

It's very late in the game, Bill. The normal review process has been corrupted by the City Manager and/or UNE, either separately or in collaboration. That has ensured that no regulatory authority has examined the question of the pier's onshore location. You and your fellow Councilors have the power to intervene and insist upon complete transparency, an indispensable requirement when doing the people's business. Or you can look the other way.

To repeat, you have always treated me with respect, and I appreciate it. Once again, thank you for your service to the people of Biddeford.

JS

John Schafer
Hills Beach, Biddeford

Whitten, Nan

From: kbuechs@earthlink.net
Sent: Sunday, October 6, 2024 9:14 PM
To: Hills Beach John; Emhiser, William; bill_emhiser@yahoo.com
Cc: Center, Harry; LaFountain, Liam; Lessard, Marc; Ortiz, Doris; Emhiser, William; Whiting, Scott; roger.beaupre@biddefordmaine.org; Gross, Neva; dylyan.doughty@biddefordmaine.org; Belanger, Norman; Planning Board
Subject: Re: UNE pier, Transparency, Ethics

EXTERNAL: This email originated from outside of the City of Biddeford email system. Do not click links or open attachments unless you recognize the sender and know the content is safe.

John et al, if you need any help to get this issue back into the public's eye please let me know, be it testimony at council, distribution/cost of printed material or publication. The facts need to be aired.

Ken Buechs

Sent using myEarthLink

On Sun Oct 06 17:55:08 EDT 2024 Hills Beach John wrote:

----- Forwarded Message -----

From: Bill
Emhiser <

bill_emhiser@yahoo.com

>

To: Hills Beach
John <

hillsbeachjohn@yahoo.com

>
Sent: **Wednesday, October 2**, 2024 at 02:45:11 PM EDT
Subject: Re: UNE's pier: are marketing objectives in play?

Not exactly ethical sending around a private email without my permission. Was going to call you later this afternoon to discuss, but will hold off for now.

Sent from my iPhone

##########

Dear Bill,

You are a gentleman. You have always treated me with respect, and that's why I have always treated you with respect. I will continue to do so. And with respect, I must tell you that your allegation of an ethical breach is way off the mark, and I reject it.

You are the City Councilor for my Ward. I voted for you. Any email that I receive from you discussing City business is a public document. In fact, it was not until you sent the email last Wednesday (above) that I noticed your August 6th email, with UNE pier diagrams that you produced, had been sent from a Yahoo address.

Maine law is crystal clear that non-governmental email addresses that elected officials use to conduct public business are subject to FOAA requests, just like their government-issued email addresses. No City employee or City Councilor is able to skirt sunshine laws by hiding communications about City business. You may want to check with City Attorney Center, who will confirm this for you.

I do not deserve special treatment, I did not ask for special treatment, and you did not ask me in writing or verbally to conceal our communications. Had you asked to send me official material as long as I kept it secret, I would have emphatically rejected the request.

Here's what I wrote to you, the Mayor, and the rest of the Council when I resigned as Chair of the Harbor Commission: "In recent months I have written about the importance of transparency and openness in decisions that affect Biddeford citizens, and I have been gratified by responses from the Mayor and several Councilors. These fundamental democratic principles are very important to me, and it has been a relief to have you confirm that they are just as important to you." And further, "You are the only ones who can intervene and insist upon complete transparency, an indispensable requirement when doing the people's business."

Since my resignation, I have freely communicated about the UNE pier with scores of Biddeford residents, with Biddeford officials, with Saco officials, with many state senators, many state representatives, the Attorney General, the Governor, state agencies, federal agencies, and the press. I will continue to do so. Each email I send to a public official about UNE's proposed pier is a public document, and each email I receive on the topic from a public official is a public document. The same is especially true for you, an elected official.

I have made my point.

During a phone conversation earlier this year, you rebuked me as follows. "It's too bad you don't have faith in your elected officials." I then wrote on July 3rd that you were mistaken, that I have faith in my elected officials, and that I appreciated the work you had been doing. Specifically I wrote, "I do have faith in my elected officials, particularly my Ward Councilor."

Last week I noted that to date, it appears the intent of this particular regulatory process is to avoid scrutiny of UNE's pier location, rather than to welcome it. The City of Biddeford appears deeply complicit in this lack of transparency, and I'm sorry to say that your use of the Yahoo address for transmitting documents --- and it's now apparent to me you wanted to keep the email secret --- has only made things worse. Shall we try for a fresh start?

I have the following questions.

1. This summer you had direct discussions with UNE and produced drawings of an alternate pier location, emailed to me on August 6th. When and how did your concern arise about a visual "impression that the docks are right up against the cliff?" What is the origin of that concern, and its relevance?
2. I have invited you, the other eight councilors, and a delegation of your choosing to get on the Saco River by boat and help prove that a substantial stretch of Saco River shoreline at UNE does in fact not have a depth of 10 feet just a couple feet offshore. Such proof would end this controversy instantly. Do you accept the invitation?

Please respond in writing, not with a phone call.

It's very late in the game, Bill. The normal review process has been corrupted by the City Manager and/or UNE, either separately or in collaboration. That has ensured that no regulatory authority has examined the question of the pier's onshore location. You and your fellow Councilors have the power to intervene and insist upon complete transparency, an indispensable requirement when doing the people's business. Or you can look the other way.

To repeat, you have always treated me with respect, and I appreciate it. Once again, thank you for your service to the people of Biddeford.

js

John Schafer
Hills Beach, Biddeford

Whitten, Nan

From: Hills Beach John <hillsbeachjohn@yahoo.com>
Sent: Monday, October 7, 2024 2:08 AM
To: Emhiser, William; bill_emhiser@yahoo.com; Buechs, Ken
Cc: Center, Harry; LaFountain, Liam; Lessard, Marc; Ortiz, Doris; Whiting, Scott; roger.beaupre@biddefordmaine.org; Gross, Neva; dylyan.doughty@biddefordmaine.org; Belanger, Norman; Planning Board; Randy Seaver; wmtw@wmtw.com; desk@newscentermaine.com; tvmail@wgme.com; ggraham@pressherald.com; dmendros@metln.org; editor@inthecourier.com; srichelieu@metln.org; Pressherald News; newsdesk@sacobaynews.com; ssharon@mainepublic.org; caroline.lecour@newscentermaine.com; donovan.lynch@newscentermaine.com; apmaine@ap.org; Patty Wight
Subject: Re: UNE pier, Transparency, Ethics

EXTERNAL: This email originated from outside of the City of Biddeford email system. Do not click links or open attachments unless you recognize the sender and know the content is safe.

Thank you, Ken. As you know, the continuing collapse of the local media, a nation-wide phenomenon, has contributed to a prevailing sense that "nobody is watching." This emboldens public officials and institutions like UNE. (Only one local reporter has had the guts to thoroughly report on this story, and UNE has now thrown a few well-placed elbows and silenced him.)

Ken, your long-term service to the community and your passion for protecting Biddeford's coastal resources are very well known, and I appreciate your willingness to stand up and be counted.

Thank you, sir. Let's plan on shining some more light on the subject, by the meager means that are still available to us. Through no fault of their own, the "traditional media" cannot help us --- they just don't have the resources.

Best,

J.S.

On Sunday, October 6, 2024 at 09:13:45 PM EDT, <kbuechs@earthlink.net> wrote:

John et al, if you need any help to get this issue back into the public's eye please let me know, be it testimony at council, distribution/cost of printed material or publication. The facts need to be aired.

Ken Buechs

Sent using myEarthLink

On Sun Oct 06 17:55:08 EDT 2024 Hills Beach John wrote:

----- Forwarded Message -----

From: Bill
Emhiser <
bill_emhiser@yahoo.com

>

To: Hills Beach
John <

hillsbeachjohn@yahoo.com

>
Sent: **Wednesday, October 2**, 2024 at 02:45:11 PM EDT
Subject: Re: UNE's pier: are marketing objectives in play?

Not exactly ethical sending around a private email without my permission. Was going to call you later this afternoon to discuss, but will hold off for now.

Sent from my iPhone

##########

Dear Bill,

You are a gentleman. You have always treated me with respect, and that's why I have always treated you with respect. I will continue to do so. And with respect, I must tell you that your allegation of an ethical breach is way off the mark, and I reject it.

You are the City Councilor for my Ward. I voted for you. Any email that I receive from you discussing City business is a public document. In fact, it was not until you sent the email last Wednesday (above) that I noticed your August 6th email, with UNE pier diagrams that you produced, had been sent from a Yahoo address.

Maine law is crystal clear that non-governmental email addresses that elected officials use to conduct public business are subject to FOAA requests, just like their government-issued email addresses. No City employee or City Councilor is able to skirt sunshine laws by hiding communications about City business. You may want to check with City Attorney Center, who will confirm this for you.

I do not deserve special treatment, I did not ask for special treatment, and you did not ask me in writing or verbally to conceal our communications. Had you asked to send me official material as long as I kept it secret, I would have emphatically rejected the request.

Here's what I wrote to you, the Mayor, and the rest of the Council when I resigned as Chair of the Harbor Commission: "In recent months I have written about the importance of transparency and openness in decisions that affect Biddeford citizens, and I have been gratified by responses from the Mayor and several Councilors. These fundamental democratic principles are very important to me, and it has been a relief to have you confirm that they are just as important to you." And further, "You are the only ones who can intervene and insist upon complete transparency, an indispensable requirement when doing the people's business."

Since my resignation, I have freely communicated about the UNE pier with scores of Biddeford residents, with Biddeford officials, with Saco officials, with many state senators, many state representatives, the Attorney General, the Governor, state agencies, federal agencies, and the press. I will continue to do so. Each email I send to a public official about UNE's proposed pier is a public document, and each email I receive on the topic from a public official is a public document. The same is especially true for you, an elected official.

I have made my point.

During a phone conversation earlier this year, you rebuked me as follows. "It's too bad you don't have faith in your elected officials." I then wrote on July 3rd that you were mistaken, that I have faith in my elected officials, and that I appreciated the work you had been doing. Specifically I wrote, "I do have faith in my elected officials, particularly my Ward Councilor."

Last week I noted that to date, it appears the intent of this particular regulatory process is to avoid scrutiny of UNE's pier location, rather than to welcome it. The City of Biddeford appears deeply complicit in this lack of transparency, and I'm sorry to say that your use of the Yahoo address for transmitting documents --- and it's now apparent to me you wanted to keep the email secret --- has only made things worse. Shall we try for a fresh start?

I have the following questions.

1. This summer you had direct discussions with UNE and produced drawings of an alternate pier location, emailed to me on August 6th. When and how did your concern arise about a visual "impression that the docks are right up against the cliff?" What is the origin of that concern, and its relevance?
2. I have invited you, the other eight councilors, and a delegation of your choosing to get on the Saco River by boat and help prove that a substantial stretch of Saco River shoreline at UNE does in fact not have a depth of 10 feet just a couple feet offshore. Such proof would end this controversy instantly. Do you accept the invitation?

Please respond in writing, not with a phone call.

It's very late in the game, Bill. The normal review process has been corrupted by the City Manager and/or UNE, either separately or in collaboration. That has ensured that no regulatory authority has examined the question of the pier's onshore location. You and your fellow Councilors have the power to intervene and insist upon complete transparency, an indispensable requirement when doing the people's business. Or you can look the other way.

To repeat, you have always treated me with respect, and I appreciate it. Once again, thank you for your service to the people of Biddeford.

JS

John Schafer
Hills Beach, Biddeford

Whitten, Nan

From: Geoffrey Bove <gbove@bovelabs.com>
Sent: Wednesday, October 2, 2024 3:39 PM
To: Hills Beach John
Cc: Emhiser, William; LaFountain, Liam; Lessard, Marc; Ortiz, Doris; Whiting, Scott; roger.beaupre@biddefordmaine.org; Gross, Neva; dylyan.doughty@biddefordmaine.org; Belanger, Norman; Grohman, Grohman, Martin; Bennett, James; Planning Board
Subject: Re: UNE's pier: are marketing objectives in play?

EXTERNAL: This email originated from outside of the City of Biddeford email system. Do not click links or open attachments unless you recognize the sender and know the content is safe.
This is now out of hand on all sides. I don't even know who this is too, but here goes.

1. BUILDINGS? LIGHTS? For WHAT? No.

2. A pier where the floating docks are parallel to the shore will in this case be OBVIOUSLY better both cosmetically and functionally. "Right up against the cliffs" is the best case (not that there is anything remotely resembling a cliff).

3 and 4 and 5. Something no one has mentioned in this discussion is the "needs of the marine research center." There is no vigorous program there. They currently only have one little boat. Are there plans to grow that center (again), where they would need a pier? I think that they should. If they had plans for that, to enrich and grow marine science research, I would be at least onboard for the idea that they need the pier at all.

6. Also, the whole UNE granite thing facing upriver seems only there for marketing, since the only people who can see it are those on the water. So marketing might have some play here as well. They don't really take care of that area in terms of landscaping any longer, but perhaps that's because it includes Biddeford's ROW. Who knows!

Geoff

On Wed, Oct 2, 2024 at 12:48 PM Hills Beach John <hillsbeachjohn@yahoo.com> wrote:

---------- Forwarded message ---------
From: **Bill Emhiser** <bill_emhiser@yahoo.com>
Date: Tue, Aug 6, 2024 at 12:13 PM
Subject: UNE Pier Design
To: **John Schafer**

John,

As I mentioned I had discussed alternative design with UNE. Here is what I proposed. There still needs to be a pretty significant outward pier to get the outer edge of the floating docks to the same edge depth of -10'. This I believe is more realistic, and avoids the impression that the docks are right up against the cliff. And thanks for the discussion.

-- Bill

##################

Dear Bill,

Thank you for your August 6 email about your direct discussions with UNE, and for the diagrams (attached) of the concept that you proposed to the university. I had not realized that you had those technical capabilities, but they certainly must be helpful to the rest of the Council. I appreciate your continuing interest in arriving at the best outcome.

For the past two months I have repeatedly turned the following statement over in my mind, and I continue to find it very odd: "This I believe is more realistic, and avoids the impression that the docks are right up against the cliff."

Why in the world would it matter if a pier that fully meets the functional needs of the marine research center creates "the impression that the docks are right up against the cliff?" Let me explain why I think it's very important to zero in closely on that statement.

The only plausible explanation I can possibly come up with for the university's efforts to avoid regulatory scrutiny of their proposed pier location is marketing. Marketing and PR. They want a gleaming new pier, with two buildings on it, to extend *well into the river* so that the pier absolutely dominates the lower Saco River. Imagine the video and photographs of this impressive new installation, easily the most commanding presence on the river. Imagine the breathtaking drone footage! Imagine it lit up at night! All of it plastered on the university's website and published in brochures sent to prospective students. The ultimate recruitment tool in the never-ending but lucrative quest for tuition cash and government grants.

So far UNE has engineered a process in which regulatory agencies ignore pier location. Marketing and PR would explain that sequence of curious episodes, and I can think of no other reasonable explanation.

I could be wrong, of course. But if I am, consider this chronology of events: UNE submitted its application to the City in early June, a media firestorm broke out, you had direct discussions with the applicant presumably in your role as a City Councilor, you devised your own proposal and drawings, and you sent them to me on August 6. I have to ask --- along the way, when and how did your concern arise about a visual "impression?" Why was such an impression a factor that had to be taken into consideration as you worked to produce an alternate design, proposed to both UNE and to me? I have not seen that concern articulated anywhere else. What is its origin, and what is its relevance?

Thank you again for your public service to the people of Biddeford. I know it requires ample dedication, time and effort.

Best wishes,
John

--
Geoffrey Bove, DC PhD
Bove Consulting and Boatyard
27 Nettie Ln.

Kennebunkport, ME 04046
www.bovelabs.com
Cell: 207 590 8949

Whitten, Nan

From: Hills Beach John <hillsbeachjohn@yahoo.com>
Sent: Wednesday, October 2, 2024 12:48 PM
To: Emhiser, William
Cc: LaFountain, Liam; Lessard, Marc; Ortiz, Doris; Whiting, Scott; roger.beaupre@biddefordmaine.org; Gross, Neva; dylyan.doughty@biddefordmaine.org; Belanger, Norman; Grohman, Martin; Bennett, James; Planning Board
Subject: UNE's pier: are marketing objectives in play?
Attachments: UNE Pier Alternative.pdf

EXTERNAL: This email originated from outside of the City of Biddeford email system. Do not click links or open attachments unless you recognize the sender and know the content is safe.

---------- Forwarded message ---------
From: **Bill Emhiser** <bill emhiser@yahoo.com>
Date: Tue, Aug 6, 2024 at 12:13 PM
Subject: UNE Pier Design
To: **John Schafer**

John,

As I mentioned I had discussed alternative design with UNE. Here is what I proposed. There still needs to be a pretty significant outward pier to get the outer edge of the floating docks to the same edge depth of -10'. This I believe is more realistic, and avoids the impression that the docks are right up against the cliff. And thanks for the discussion.

-- Bill
##########

Dear Bill,

Thank you for your August 6 email about your direct discussions with UNE, and for the diagrams (attached) of the concept that you proposed to the university. I had not realized that you had those technical capabilities, but they certainly must be helpful to the rest of the Council. I appreciate your continuing interest in arriving at the best outcome.

For the past two months I have repeatedly turned the following statement over in my mind, and I continue to find it very odd: "This I believe is more realistic, and avoids the impression that the docks are right up against the cliff."

Why in the world would it matter if a pier that fully meets the functional needs of the marine research center creates "the impression that the docks are right up against the cliff?" Let me explain why I think it's very important to zero in closely on that statement.

The only plausible explanation I can possibly come up with for the university's efforts to avoid regulatory scrutiny of their proposed pier location is marketing. Marketing and PR. They want a gleaming new pier, with two buildings on it, to extend *well into the river* so that the pier absolutely dominates the lower Saco River. Imagine the video and photographs of this impressive new installation, easily the most commanding presence on the river. Imagine the breathtaking drone footage! Imagine it lit up at night! All of it plastered on the university's website and published in

brochures sent to prospective students. The ultimate recruitment tool in the never-ending but lucrative quest for tuition cash and government grants.

So far UNE has engineered a process in which regulatory agencies ignore pier location. Marketing and PR would explain that sequence of curious episodes, and I can think of no other reasonable explanation.

I could be wrong, of course. But if I am, consider this chronology of events: UNE submitted its application to the City in early June, a media firestorm broke out, you had direct discussions with the applicant presumably in your role as a City Councilor, you devised your own proposal and drawings, and you sent them to me on August 6. I have to ask --- along the way, when and how did your concern arise about a visual "impression?" Why was such an impression a factor that had to be taken into consideration as you worked to produce an alternate design, proposed to both UNE and to me? I have not seen that concern articulated anywhere else. What is its origin, and what is its relevance?

Thank you again for your public service to the people of Biddeford. I know it requires ample dedication, time and effort.

Best wishes,
John

Whitten, Nan

From: Alan Thibeault <athibeault@une.edu>
Sent: Wednesday, June 26, 2024 7:14 AM
To: Whitten, Nan
Subject: RE: EXT: 2023.34-UNE-Research Pier-Public Comments
Attachments: 6-24-24 Noble.pdf

EXTERNAL: This email originated from outside of the City of Biddeford email system. Do not click links or open attachments unless you recognize the sender and know the content is safe.

Nan, I am specifically looking for the one that Kyle referenced in his recent communication to the Planning Board. It would be the Planning Board meeting that occurred April 19, 2023.

Thanks
AT

From: Whitten, Nan <Nan.Whitten@Biddefordmaine.org>
Sent: Wednesday, June 26, 2024 6:56 AM
To: Alan Thibeault <athibeault@une.edu>; Tom Saucier <tsaucier@sitedesignassociates.biz>; Andrew Philippe <aphilippe@une.edu>
Cc: Galbraith, David <David.Galbraith@biddefordmaine.org>; Gervais, George <George.Gervais@biddefordmaine.org>; Iriqat, Adi <adi.iriqat@biddefordmaine.org>
Subject: RE: EXT: 2023.34-UNE-Research Pier-Public Comments

We have changed our website, for which archives are you looking?

From: Alan Thibeault <athibeault@une.edu>
Sent: Tuesday, June 25, 2024 3:39 PM
To: Whitten, Nan <Nan.Whitten@Biddefordmaine.org>; Tom Saucier <tsaucier@sitedesignassociates.biz>; Andrew Philippe <aphilippe@une.edu>
Cc: Galbraith, David <David.Galbraith@biddefordmaine.org>; Gervais, George <George.Gervais@biddefordmaine.org>; Iriqat, Adi <adi.iriqat@biddefordmaine.org>
Subject: RE: EXT: 2023.34-UNE-Research Pier-Public Comments

EXTERNAL: This email originated from outside of the City of Biddeford email system. Do not click links or open attachments unless you recognize the sender and know the content is safe.

Nan, we did a copy from Kyle.

I was wondering if you knew when the public meeting video archives will be available again. It appears the site was recently updated and the archives do not seem to be there...

Thanks
AT

From: Whitten, Nan <Nan.Whitten@Biddefordmaine.org>
Sent: Monday, June 24, 2024 3:09 PM
To: Alan Thibeault <athibeault@une.edu>; Tom Saucier <tsaucier@sitedesignassociates.biz>; Andrew Philippe <aphilippe@une.edu>
Cc: Galbraith, David <David.Galbraith@biddefordmaine.org>; Gervais, George <George.Gervais@biddefordmaine.org>;

Iriqat, Adi <adi.iriqat@biddefordmaine.org>
Subject: RE: EXT: 2023.34-UNE-Research Pier-Public Comments

You are very welcome although I imagine he will bring one to you also.

From: Alan Thibeault <athibeault@une.edu>
Sent: Monday, June 24, 2024 3:08 PM
To: Whitten, Nan <Nan.Whitten@Biddefordmaine.org>; Tom Saucier <tsaucier@sitedesignassociates.biz>; Andrew Philippe <aphilippe@une.edu>
Cc: Galbraith, David <David.Galbraith@biddefordmaine.org>; Gervais, George <George.Gervais@biddefordmaine.org>; Iriqat, Adi <adi.iriqat@biddefordmaine.org>
Subject: RE: EXT: 2023.34-UNE-Research Pier-Public Comments

EXTERNAL: This email originated from outside of the City of Biddeford email system. Do not click links or open attachments unless you recognize the sender and know the content is safe.

Nan, thank you for forwarding.

AT

Alan Thibeault
Vice President for University Operations
University of New England
207.602.2253 (Office)
207.468.9296 (Cell)

From: Whitten, Nan <Nan.Whitten@Biddefordmaine.org>
Sent: Monday, June 24, 2024 1:00 PM
To: Tom Saucier <tsaucier@sitedesignassociates.biz>; Andrew Philippe <aphilippe@une.edu>; Alan Thibeault <athibeault@une.edu>
Cc: Galbraith, David <David.Galbraith@biddefordmaine.org>; Gervais, George <George.Gervais@biddefordmaine.org>; Iriqat, Adi <adi.iriqat@biddefordmaine.org>
Subject: EXT: 2023.34-UNE-Research Pier-Public Comments
Importance: High

This email originated from outside of UNE.

Good Afternoon:

The attached document was dropped off regarding the Research Pier project.

Mr. Noble came in to see the Planning Board application for this project and wanted this noted in the file. We do not have a Planning Board application yet but it has been filed for documentation of public comments.

Nan Whitten
City of Biddeford
Office Manager
Planning & Development
207-284-9115

The contents of this e-mail message and any attachments are confidential and are intended solely for addressee. The information may also be legally privileged. This transmission is sent in trust, for the sole purpose of delivery to the intended recipient. If you have received this transmission in error, any use, reproduction or dissemination of this transmission is strictly prohibited. If you are not the intended recipient, please immediately notify the sender by reply e-mail or phone and delete this message and its attachments, if any.

Under Maine law, documents - including e-mails - in the possession of public officials or city employees about government business may be classified as public records. There are very few exceptions. As a result, please be advised that what is written in an e-mail could be released to the public and/or the media if requested.


PUT THE PIER HERE

Kyle H. Noble
56 Hills Beach Road
Biddeford, Maine 04005

Trustees
University of New England
Biddeford, Maine 04005

June 24, 2024

Dear Trustees,

Because I support the overall mission of UNE I helped to write the institutional zoning within which it functions while I was on the Biddeford City Council and had lunch with UNE President Featherman in celebration after the law passed. Long after that and since the time that UNE expressed desire for a large projecting pier with tractor trailer access, and was promptly rejected, I have followed this issue. What I see happening now for the research pier approval appears as a corrupted process to me.

In my opinion twice in 2023 UNE's Vice President of Operations, Al Thibeau, misled me to my face as to whether the research pier would be projecting from or parallel with the river bank. First, when I specifically asked in a private meeting in his office which type of design would be used he said parallel and that the Harbor Masters concerns were being taken into account in design. About a week later UNE hosted an on-campus public presentation of its Five Year Master Plan where he said something similar to other witnesses and myself.

Both those events occurred before UNE's presentation of the Master Plan to the Planning Board for approval. I attended that presentation and would have spoken against the pier if Mr. Thibeau had not once again said that the design was only 30% complete and taking into account the Harbor Masters concerns (at approximately 47 minutes into the April 19, 2023 meeting).

Of course he did not mention to the Planning Board that UNE was simultaneously seeking a federal grant to fund the pier which did not have local approval, a potential violation of normal process where the local Harbor Master as federal agent over federal channels and mooring fields has direct approval input before a pier design may proceed to other agencies for approval. In my opinion for UNE to now claim that they could not understand the Harbor Master(s) and to misrepresent the Harbor Masters input on a new webpage while asking for public comment shows that they have completely ignored what was said and that they believe they have superior private rights to the shared marine resources.

Now realize also that it has been 3 of the state's most experienced Harbor Masters, not just one, who have said that the UNE dock should be close to and parallel with the shore, not projecting into the mooring field. Yes, the 3 includes Biddeford's Harbor Master Emeritus, recently honored with a public plaque for 35 years of service, and who explained the Harbor Masters position to UNE in public meetings as long ago as 2014-15, an explanation which has not changed and UNE appears to have ignored since they do not comment on such a design, only the imaginary one they attribute incorrectly to the Harbor Masters on their erroneous webpage.

The City of Biddeford cannot be responsible for UNE spending money on an unapproved design, seeking federal funding of the same, and holding up a bad representation of the Harbor Masters input for public comment. That is all on you, in my opinion.

With the amount of respect not shown by UNE to our local Harbor Master authorities why is the City attempting to write new law to push this project around the concerns of 3 Harbor Masters?

Kyle H. Noble

Kyle H. Noble

Whitten, Nan

From: Galbraith, David
Sent: Thursday, April 10, 2025 12:51 PM
To: Demers, Jeff; Gervais, George; Chekan, Craig; Irigat, Adi; Whitten, Nan; Crocker, Jason; Dexter, Edward; Fisk, JoAnne; Fecteau, Roby; Milligan, Tom
Cc: Andrew Philippe; Alan Thibeault; Tom Saucier; Center, Harry; Macneill, Shelly; Lamontagne, Danica
Subject: UNE Research Dock / Correspondence / FOIA Request
Importance: High

FYI: On Monday afternoon Nan & I were copied on an email from "Hills Beach John (HBJ)" (John Schafer – 24 Sky Harbor Drive - hillsbeachjohn@yahoo.com) to Brian Phinney requesting copies of *"all future communications between the Planning Department and UNE, and vice versa, in regard to the application for a new marine sciences research pier"*, he is also requesting to *"be notified as to when this application is first scheduled onto a Planning Board agenda"*.

We are able to comply with Mr. Shafer's second request and Nan has included him on of public notification list. However, my concern with his first request, so I sought a legal opinion from Harry Center, asking if the City legally **REQUIRED** to copy "HBJ" on "all future communication…" as it seems like an excessive request. I also want to make sure that the Applicant (UNE) gets a fair hearing / review of their application. It should be noted that the Planning Department has not yet received the UNE Pier application.

Harry wrote back to me today and responded with the following:

Letter of Notice

To the Biddeford City Planning Board
Wednesday, May 21, 2025

We The Undersigned are mooring owners on the Biddeford side of the lower Saco River, either directly on, or in very close proximity to, the physical site proposed by the University of New England (UNE) for their new marine sciences research pier. We are joined in this Letter of Notice by the former Harbormaster of Saco, Maine, who holds a Master's License from the United States Coast Guard. We are in solidarity with each other in regard to this obvious conclusion:

UNE has proposed a location for its pier that is unavailable. And therefore the Planning Board's hands are tied --- you are unable to approve their application.

Explanation

Several of us have already written to regulatory authorities stating quite plainly that we have no intention of moving our moorings. Those moorings are personal property. Commercial moorings can even be assigned in estate documents to our heirs. As long as we pay our mooring fees and operate responsibly on the river, our property cannot be seized.

The Harbormaster is no longer part of Biddeford's review of the UNE application. Therefore, only the Planning Board and the Biddeford City Council have any remaining authority. For the Planning Board to approve UNE's application, it would first need to know that the location UNE has proposed for its pier is available. That requires the Council to consider and pass a motion that directs the Harbormaster to seize the personal property of the Undersigned. Or perhaps vote to begin eminent domain proceedings.

If the City orders the Harbormaster to seize our property, we believe the Harbormaster may refuse the order. If the City moves to fire the Harbormaster because he refuses such an order, litigation is possible. If the Council directs City Staff to somehow bypass the Harbormaster and try to seize any mooring, litigation is certain. If UNE sues Biddeford, seeking to force the City to seize the personal property of the Undersigned, a complex and multi-year legal saga will begin.

Biddeford cannot afford the expense of a tortuous, years-long legal battle with mooring holders that it's very likely to lose. Nor has UNE explained to the Planning Board how it plans to forcibly remove the current mooring owners.

In its application UNE merely writes, *"To address impacts to moorings, GEI and UNE are prepared to work with City staff as necessary to allow for mooring adjustments to accommodate the proposed pier."* That sentence is meaningless. UNE has no signed agreement with mooring owners. *It's not going to get a signed agreement with mooring owners.* To repeat, we're not moving. Therefore, UNE has proposed building a pier in a location that is unavailable. Their application is incomplete.

Through no fault of its own, the Biddeford Planning Board is unable to approve UNE's application as currently submitted.

Mooring #: 12 THOMAS J. HATCH

Mooring #: 150 Robert Brackett

Mooring #: 138 Gregg McPherson

Mooring #: 46 William Mitchell

Mooring #: 126 CAPT SHAWN TIBBETS

Mooring #: 46 Michael RAMONDO

Mooring #: 248 Steven L Goodell

Dan Chadbourne
Former Harbormaster, Saco, ME

David C.M. Galbraith, City Planner, Deputy Director
of Planning &Economic Development

David.galbraith@biddefordmaine.org

205 Main Street / PO Box 586 • Biddeford, ME
City of Biddeford Government

(207) 571-0700 • www.biddefordmaine.org
@CityofBiddeford

NOTICE OF DECISION

September 4, 2025

Tom Saucier, P.E.
Site Design Associates
23 Whitney Way
Topsham, ME 04086

RE: Planning Board Case #2024.34 Final Plan Review – University of New England (UNE) Site Plan and Shoreland Zoning Review Proposed Construction of a Marine Science Center Research Pier 11 Hills Beach Road (Map #52, Lot 4) located in the City's Institutional (IN) Zoning District.

Dear Tom,

At their meeting of August 6, 2025, the Biddeford Planning Board reviewed the Final Application for 2024.34 –UNE to construct a Marine Science Center Pier on 11 Hills Beach Road, (Tax Map 52, Lot 4) in the Institutional Zone. UNE owns the property Alan Thibeault from UNE presented to the Planning Board.

Based on the evidence available and the conclusions above, the Biddeford Planning Board approves the proposed project summarized within the attached Staff report and pursuant to the provisions of the City of Biddeford Code of Ordinances Land Development Regulations, Article XI (Site Plan Review), and Subdivision Review, and hereby approves Case # 2024.34 for UNE to construct a Marine Science Research Pier at 11 Hills Beach Road (Map 52, Lot 4) in the Institutional Zone with the following Conditions of Approval (COA):

1. The material provided for the proposed project has been reviewed only for general conformance to the City technical requirements. The applicant(s) and/or their technical consultant shall be responsible for the actual design details and completeness of their work. It is incumbent upon the applicant(s) to ensure that the project is in conformance and complies with all City Codes, ordinances and regulations as well as with all state regulations, including, but not limited to, space and bulk standards, performance standards, use standards and other zoning type requirements.

2. Standard Conditions of Approval apply.

3. Modifications to Approved Development Plans: The project shall be constructed in accordance with the approved development plans. No deviations to the approved development plans shall be made without prior written authorization by the City Planner. Should the Applicants desire a modification from approved plans, they shall be required to submit a formal letter requesting a "minor modification" to the approved development plans. The narrative shall be submitted outlining the request, the reasoning for the request (justification) and include plans illustrating the approved plans and proposed modifications. Changes beyond the authority of the City Planner shall be reviewed and approved by the Planning Board. It should be noted that review fees for any proposed changes may be assessed to the Applicant, for Staff or Peer Review time spent evaluating the request.

4. A Letter of Credit or other surety acceptable to the City of Biddeford shall be submitted prior to the issuance of permits or site work being initiated. The financial guarantee shall be established for 150% of the cost of the following improvements:

a. Landscaping
b. Paving
c. Work within ROW (existing or proposed)
d. Stormwater Drainage
e. Loam & seed
f. Sediment & erosion control
g. As-Built Plans
h. Property Monuments

5. Prior to any ground disturbance, the applicant shall establish a construction inspection account equal to $2,500.00.

6. Prior to any ground disturbance, a pre-construction meeting with the owner/applicant, contractor, and City is required. Contact the Engineering Department to schedule this meeting.

7. Contact the Department of Public Works for driveway location permits, curb cut permits and/or street opening permits prior to the start of construction.

8. An as-built plan must be provided to the City of Biddeford Engineering Office at the end of the project electronically, which can be read by the City of Biddeford's Geographic Information System software. Note: Any modifications to the Planning Board approved development plans shall be reviewed and approved by the City Planner prior to being made, including any "field changes".

9. The applicant shall incorporate appropriate erosion control measures into this project to reduce erosion effects from the work. All disturbed areas must be re-vegetated and/or otherwise stabilized at the appropriate stage of the work per Maine DEP standards in the Best Management Practice (BMP) manual.

10. That the Article VI Performance Standards requirements regarding Dust, Fumes, Vapors & Gases (sect 25), Explosive Materials (sect 28), Glare (sect 37), Noise (sect 48) be followed.

11. The applicant shall obtain all other pertinent local, state and federal permits, licenses, and insurance such as blasting, building, electrical, plumbing, etc. prior to commencing business.

12. At the completion of the project the owner/applicant shall request a final inspection. This request shall be directed to the Engineering Department. Performance guarantees and remaining escrow accounts shall not be released until the Planning Office certifies that the project has been completed and is in compliance with the approved development plans and all applicable City Ordinances.

13. The applicant shall submit approved plans for signature of the City's Planning Board, which shall be recorded in the York County Registry of Deeds. An electronic copy of the recorded plan shall be sent to the Planning Office & Engineering Department prior to Building Permit Issuance. (This item has been completed)

14. Once stamped and signed "As-Built drawings" are submitted to the Planning and Engineering Departments (clearly identifying what approved deviations and variances were installed based on the approved permit drawings), the City Engineering Department will conduct an inspection. The "as Built Checklist" shall be submitted for review and approval, for any performance guarantee release.

15. As-Built Drawings and CAD Files need to be submitted to the Planning & Engineering Departments prior to a 'Site Punch list Inspection' and any bond release.

16. As agreed during the public hearing process, the University of New England (UNE) shall be responsible for the reasonable costs, as applicable, for the relocation of all impacted moorings displaced by the construction of the UNE research pier.

17. Fire Department Requirements:

A. The Applicant shall schedule an on-site inspection with the Biddeford Fire Chief to verify that the emergency vehicle turn-around can accommodate the largest vehicle in their fleet to the Department's satisfaction. Any necessary modifications shall be coordinated with the City Planner and constructed to the Fire Chief's satisfaction.

This Final Approval is valid for 1 year (expiration date August 6, 2026). If the authorized

use is not initiated within one year of approval, the permit becomes void, and a new application must be submitted for reconsideration. Appeals of the Planning Board's decision may be made as per the Biddeford Revised Code of Ordinances.

We can be reached at 207-284-9115 if you have any questions.

Sincerely,

David CM Galbraith
City Planner & Acting Director of Planning & Economic Development

Cc: Alan Thibeault, UNE via Email
Andrew Phillippe UNE via Email
Roby Fecteau Director of Code Enforcement via Email
Craig Chekan City Engineer via Email

David C.M. Galbraith, City Planner, Deputy Director
of Planning &Economic Development

David.galbraith@biddefordmaine.org

205 Main Street / PO Box 586 • Biddeford, ME
City of Biddeford Government

(207) 571-0700 • www.biddefordmaine.org
@CityofBiddeford

Standard Conditions of Approval

Owner/Applicant: University of New England
Project Description: Shoreland Application Approval
Project Location: 11 Hills Beach Road
Tax Map & Lot Number: Map 52, Lot 4
Project ID: 2024.34
Date: September 4, 2025

1. The material provided for the proposed project has been reviewed only for general conformance to the City technical requirements. The applicant(s) and/or their technical consultant shall be responsible for the actual design details and completeness of their work. It is incumbent upon the applicant(s) to ensure that the project is in conformance and complies with all City Codes, ordinances and regulations as well as with all state regulations, including, but not limited to, space and bulk standards, performance standards, use standards and other zoning type requirements.

2. All work shall be in conformance with the approved plans and submission documents. No deviations from the approved plans are permitted without prior approval from the Planning Board for major changes, and from the City Planner and City Engineer for minor changes. The City Planner shall make the determination of major or minor.

3. A Letter of Credit or other surety acceptable to the City of Biddeford shall be submitted prior to the issuance of permits or site work being initiated. The financial guarantee shall be established for 150% of the cost of the following improvements:

a. Landscaping
b. Paving
c. Work within ROW (existing or proposed),
d. Drainage
e. Loam & seed
f. Sediment & erosion control
g. As-Builts
h. Monuments

4. Prior to any ground disturbance, the applicant shall establish a construction inspection account equal to $2,500.00.

5. Prior to any ground disturbance, a pre-construction meeting with the owner/applicant, contractor, and City is required. Contact the Engineering Department to schedule this meeting.

6. Contact the Department of Public Works for driveway location permits, curb cut permits and/or street opening permits prior to the start of construction.

7. An as-built plan must be provided to the City of Biddeford Engineering Office at the end of the project electronically, which can be read by the City of Biddeford's Geographic Information System software. Note: Any modifications to the Planning Board approved development plans shall be reviewed and approved by the City Planner prior to being made, including any "field changes".

8. The applicant shall incorporate appropriate erosion control measures into this project to reduce erosion effects from the work. All disturbed areas must be re-vegetated and/or otherwise stabilized at the appropriate stage of the work per Maine DEP standards in the Best Management Practice (BMP) manual.

9. That Article VI Performance Standards requirements regarding Dust, Fumes, Vapors & Gases (sect 25), Explosive Materials (sect 28), Glare (sect 37), Noise (sect 48) be followed.

10. The applicant shall obtain all other pertinent local, state and federal permits, licenses, and insurance such as blasting, building, electrical, plumbing, etc. prior to commencing business.

11. At the completion of the project the owner/applicant shall request a final inspection. This request shall be directed to the Planning Office. Performance guarantees and remaining escrow accounts shall not be released until the Planning Office certifies that the project has been completed and is in compliance with the approval and all applicable City Ordinances.

12. The applicant shall submit approved plans for signature of the City's Planning Board, which shall be recorded in the York County Registry of Deeds. An electronic copy of the recorded plan shall be sent to the Planning Office. (Completed)

CITY OF BIDDEFORD

Planning and Development Department

David Galbraith
City Planner & Deputy Director of Planning & Development
205 Main Street
P.O. Box 586
Biddeford, ME 04005
(207) 284-9115
David.galbraith@biddefordmaine.org

FINDINGS OF FACT AND CONCLUSIONS OF LAW

Planning Board Case #2024.34
Final Plan Review – University of New England (UNE)
Site Plan and Shoreland Zoning Review
Proposed Construction of a Marine Science Center Research Pier
11 Hills Beach Road (Map #52, Lot 4) located in the City's Institutional (IN) Zoning District.
Date: August 6, 2025

Pursuant to the provisions of the City of Biddeford Code of Ordinances Land Development Regulations, Article XI (Site Plan Review), and Article XIV (Shoreland Zoning Ordinance), the Biddeford Planning Board has considered the application of Based on its review, including supportive data, public hearing testimony and related materials contained in the record, the Planning Board makes the following Findings of Fact and Conclusions of Law:

---

1. PROJECT DATA/INFORMATION

1.	Applicant:	University of New England 11 Hills Beach Road Biddeford, ME
2.	Owner of Property:	University of New England 11 Hills Beach Road Biddeford, ME
3.	Agent:	Tom Saucier, P.E. Site Design Associates 23 Whitney Way Topsham, ME 04086
4.	Surveyor:	Tom Saucier, P.E. Site Design Associates 23 Whitney Way Topsham, ME 04086
5.	Project Location:	11 Hills Beach Road
6.	Project Tax Map #/Lot #:	Tax Map 52 Lot 4
7.	Lot Size:	49.9-acres
8.	Base Zoning:	Institutional (IN)
9.	Overlay Zoning:	Shoreland Zoning
10.	Existing Use:	Saco River
11.	Proposed Use:	Marine Research Pier
12.	Approvals Required:	Site Plan and Shoreland Review
13.	Uses in the Vicinity:	University
14.	Waivers Requested:	A. **Article XI.II. Section 5.B.1.a.** (post development runoff) B. **Article XI.II. Section 5.B.1.e.3.** (Slopes steeper than 2:1 in ledge).

		C. **Article VI. Section 26.F.:** (cut or fill slopes that exceed 3 horizontals to 1 vertical). D. **Article XIV. Section 15.H.4.** (Road and driveway banks shall be no steeper than a slope of 2 horizontal to 1 vertical).
18.	Waivers Granted - July 16, 2025.	A. **Article XI.II. Section 5.B.1.a.** (post development runoff) B. **Article XI.II. Section 5.B.1.e.3.** (Slopes steeper than 2:1 in ledge). C. **Article VI. Section 26.F.:** (cut or fill slopes that exceed 3 horizontals to 1 vertical). D. **Article XIV. Section 15.H.4.** (Road and driveway banks shall be no steeper than a slope of 2 horizontal to 1 vertical).
22.	Other Non-City Permits Required:	N/A
23.	LDR Attachment A: Fees Paid:	Yes
25.	Planning Board Review History: Sketch Plan Review - May 21, 2025; Site Walk June 9, 2025; Preliminary Review (Tabled)- June 18, 2025; Site Walk #2 – July 9, 2025; Preliminary Review (#2) – July 16, 2025 – Preliminary Approval and Waivers approved. Final Plan Review – August 6, 2025.	

CONCLUSIONS OF LAW:

1. The proposed use meets specific requirements set forth in this ordinance and would be in compliance with applicable state or federal laws;

2. The proposed use would not create fire safety hazards by providing adequate access to the site, or to the buildings on the site, for emergency vehicles and would not create hazards through the storage of chemicals and wastes;

3. The proposed exterior lighting, where allowed, would not create hazards to motorists traveling on adjacent public streets or is adequate for the safety of occupants or users of the site or would not damage the value and diminish the usability of adjacent properties;

4. The provisions for buffers and on-site landscaping provide adequate protection to neighboring properties from detrimental or unsightly features of the development;

5. The proposed use would not have a significant, detrimental effect on the use and peaceful enjoyment of abutting property as the result of noise, vibrations, fumes, odor, dust, glare, hours of operation, or other causes;

6. The provisions for vehicular loading and unloading and parking and for vehicular and pedestrian circulation on the site and onto adjacent public streets would not create hazards to public safety or traffic congestion;

7. The proposed use would generate a volume of traffic that can reasonably be accommodated by the existing road network, or would not create unreasonable traffic hazards or would not exacerbate an existing traffic hazard, or would not create unreasonable traffic congestion;

8. The proposed use would not have a significant, detrimental effect on the value of adjacent properties which could be avoided by reasonable modification of the proposal;

9. The proposed use would not have an adverse impact on the privacy of the residents of the immediate area (within 500 feet) which could be avoided by reasonable modification of the proposal;

10. The proposed use would be in compliance with Biddeford's Comprehensive Plan;

11. The proposed use would not have an adverse impact on the immediate neighborhood or the community relative to architectural design, scale, bulk and building height, identity and historical character, or visual integrity, which could be avoided by reasonable modification of the proposal;

12. The design of the site would not result in significant flood hazards or flood damage or would be in conformance with applicable flood hazard protection requirements;

13. Adequate provision has been made for disposal of wastewater or solid waste or for the prevention of ground or surface water contamination;

14. Adequate provision has been made to control erosion or sedimentation;

15. Adequate provision has been made to handle stormwater runoff or other drainage problems on the site; and the proposed development will not unduly burden off-site surface water systems;

16. The proposed water supply would meet the demands of the proposed use for fire protection purposes;

17. Adequate provision has been made for the transportation, storage, and disposal of hazardous substances and materials as defined by state law;

18. The proposed use would not have an adverse impact on scenic vistas or on significant wildlife habitat or wetland areas and water bodies which could be avoided by reasonable modification of the proposal;

19. When located in the Shoreland Zone, the proposed use would meet the purposes of Shoreland Zoning as identified in Article XIV, Section 1 (Purposes) of this ordinance.

APPROVAL GRANTED:

Based on the evidence available and the conclusions above, the Biddeford Planning Board approves the proposed project summarized within the attached Staff report and pursuant to the provisions of the City of Biddeford Code of Ordinances Land Development Regulations, Article XI (Site Plan Review), and Article XIV (Shoreland Zoning), the Biddeford Planning Board has approved the application # 2024.34 Final Plan Review – Site Plan and Shoreland Zoning Review for the University of New England (UNE) / Proposed Construction of a Marine Science Center Research Pier to be located at 11 Hills Beach Road (Map #52, Lot 4) located in the City's Institutional (IN) Zoning District, with the attached Findings of Fact (FOF) with the following Conditions of Approval (COA):

1. The material provided for the proposed project has been reviewed only for general conformance to the City technical requirements. The applicant(s) and/or their technical consultant shall be responsible for the actual design details and completeness of their work. It is incumbent upon the applicant(s) to ensure that the project is in conformance and complies with all City Codes, ordinances and regulations as well as with all state regulations, including, but not limited to, space and bulk standards, performance standards, use standards and other zoning type requirements.

2. Standard Conditions of Approval apply.

3. Modifications to Approved Development Plans: The project shall be constructed in accordance with the approved development plans. No deviations to the approved development plans shall be made without prior written authorization by the City Planner. Should the Applicants desire a modification from approved plans, they shall be required to submit a formal letter requesting a "minor modification" to the approved development plans. The narrative shall be submitted outlining the request, the reasoning for the request (justification) and shall include plans illustrating the approved plans and proposed modifications. Changes beyond the authority of the City Planner shall be reviewed and approved by the Planning Board. It should be noted that review fees for any proposed changes may be assessed to the Applicant, for Staff or Peer Review time spent evaluating the request.

4. A Letter of Credit or other surety acceptable to the City of Biddeford shall be submitted prior to the issuance of permits or site work being initiated. The financial guarantee shall be established for 150% of the cost of the following improvements:
   a. Landscaping
   b. Paving
   c. Work within ROW (existing or proposed)
   d. Stormwater Drainage
   e. Loam & seed
   f. Sediment & erosion control
   g. As-Built Plans
   h. Property Monuments

5. Prior to any ground disturbance, the applicant shall establish a construction inspection account equal to: $2,500.00.

6. Prior to any ground disturbance, a pre-construction meeting with the owner/applicant, contractor, and City is required. Contact the Engineering Department to schedule this meeting.

7. Contact the Department of Public Works for driveway location permits, curb cut permits and/or street opening permits prior to the start of construction.

8. An as-built plan must be provided to the City of Biddeford Engineering Office at the end of the project electronically, which can be read by the City of Biddeford's Geographic Information System software. Note: Any modifications to the Planning Board approved development plans shall be reviewed and approved by the City Planner prior to being made, including any "field changes".

9. The applicant shall incorporate appropriate erosion control measures into this project to reduce erosion effects from the work. All disturbed areas must be re-vegetated and/or otherwise stabilized at the appropriate stage of the work per Maine DEP standards in the Best Management Practice (BMP) manual.

10. That the Article VI Performance Standards requirements regarding Dust, Fumes, Vapors & Gases (sect 25), Explosive Materials (sect 28), Glare (sect 37), Noise (sect 48) be followed.

11. The applicant shall obtain all other pertinent local, state and federal permits, licenses, and insurance such as blasting, building, electrical, plumbing, etc. prior to commencing business.

12. At the completion of the project the owner/applicant shall request a final inspection. This request shall be directed to the Engineering Department. Performance guarantees and remaining escrow accounts shall not be released until the Planning Office certifies that the project has been completed and is in compliance with the approved development plans and all applicable City Ordinances.

13. The applicant shall submit approved plans for signature of the City's Planning Board, which shall be recorded in the York County Registry of Deeds. An electronic copy of the recorded plan shall be sent to the Planning Office.

14. Once stamped and signed "As-Built drawings" are submitted to the Planning and Engineering Departments (clearly identifying what approved deviations and variances were installed based on the approved permit drawings), the City Engineering Department will conduct an inspection. **The "as Built Checklist" shall be submitted for review and approval, for any performance guarantee release.**

15. As-Built Drawings and CAD Files need to be submitted to the Planning & Engineering Departments **prior to a 'Site Punch list Inspection' and any bond release.**

16. York County Recorded Drawings: Applicant must submit recorded copies of York County Registry of Deed drawings to Planning & Engineering Department **prior to Building Permit Issuance.**

17. As agreed during the public hearing process, the University of New England (UNE) shall be responsible for the reasonable costs, as applicable, for the relocation of all impacted moorings displaced by the construction of the UNE research pier.

18. Fire Department Requirements:

    A. The Applicant shall schedule an on-site inspection with the Biddeford Fire Chief to verify that the emergency vehicle turn-around can accommodate the largest vehicle in their fleet to the Department's satisfaction. Any necessary modifications shall be coordinated with the City Planner and constructed to the Fire Chief's satisfaction.

Alexa Plotkin Planning Board Chair

8/21/25
Date

CITY OF BIDDEFORD

Planning and Development Department

David C.M. Galbraith
Deputy Director/City Planner
205 Main Street
P.O. Box 586
Biddeford, ME 04005
(207) 284-9115
David.Galbraith@biddefordmaine.org

PLANNING BOARD STAFF REPORT

TO: Chair Plotkin and Members of the Biddeford Planning Board

FROM: David C.M. Galbraith, Deputy Director/City Planner

DATE: July 28, 2025

RE: 2024.34 Final Plan Review – Site Plan and Shoreland Zoning Review for the University of New England (UNE) / Proposed Construction of a Marine Science Center Research Pier to be located at 11 Hills Beach Road (Map #52, Lot 4) located in the City's Institutional (IN) Zoning District.

MEETING DATE: August 6, 2025, at 6:00 PM

1. REVIEW HISTORY:

The subject application has had the following hearings/meetings:

Planning Board Review History:
Sketch Plan Review - May 21, 2025;
Site Walk June 9, 2025;
Preliminary Review (Tabled)- June 18, 2025;
Site Walk #2 – July 9, 2025;
Preliminary Review (#2) – July 16, 2025 – Preliminary Approval and Waivers approved.
Final Plan Review – August 6, 2025.

This project was last discussed during the July 16, 2025, Planning Board meeting where the project was granted preliminary plan approval. During the same hearing the Applicant requested four (4) waivers which were also granted by the Board. The requested / granted waivers are outlined below:

Waivers Requested / Granted:

A. Article XI.II. Section 5.B.1.a. (post development runoff)
B. Article XI.II. Section 5.B.1.e.3. (Slopes steeper than 2:1 in ledge).
C. Article VI. Section 26.F.: (cut or fill slopes that exceed 3 horizontals to 1 vertical).
D. Article XIV. Section 15.H.4. (Road and driveway banks shall be no steeper than a slope of 2 horizontal to 1 vertical).

The Site Plan and Shoreland Zoning approval and the four (4) requested waivers were approved by a 3-2 vote by the Board with members Plotkin, Patoine and Deschambault voting in the affirmative and two (2) members voting in the negative (Angers and Dubois).

The application before the Planning Board is a request for Final Plan Approval.

RE: Case # 2024.34 Final Plan Review – Site Plan and Shoreland Zoning Review for the University of New England (UNE) / Proposed Construction of a Marine Science Center Research Pier to be located at 11 Hills Beach Road (Map #52, Lot 4) located in the City's Institutional (IN) Zoning District.

MEETING DATE: August 6, 2025, at 6:00 PM

2. INTRODUCTION

Tom Saucier, PE of Site Design Associates, is representing the University of New England (UNE) who is applying for Final Site Plan Review within the Shoreland Zoning District. The University of New England (UNE) proposes to construct a new pier on the Saco River adjacent to the Girard Marine Science Center (GMSC) to support research and educational programming. The project has been in development for more than 10 years and has gone through extensive planning and alternatives analysis in achieving the design that is being proposed.

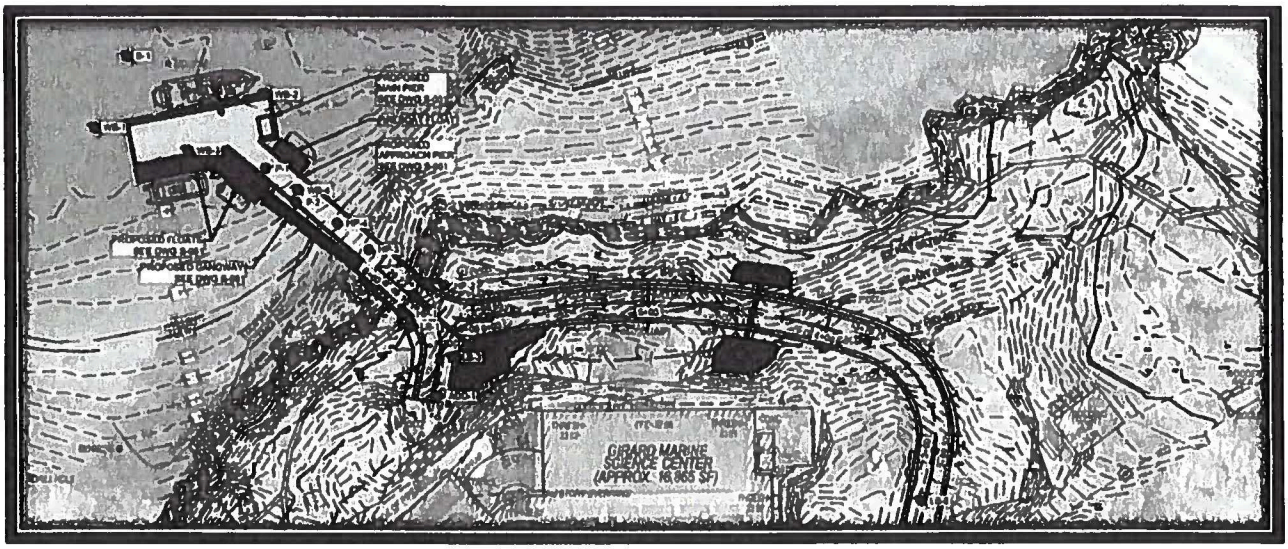

Proposed Marine Science Center Research Pier

It should be noted that the Planning Department received the formal application for this project on April 16, 2025. However, the case # that was assigned to this project was in 2024 (Case # 2024.34) as that is when the Planning Department started receiving comments from the public on this application (prior to application submittal), and Staff wanted to make certain that any and all correspondence related to this matter be saved within the public record for complete transparency. These submitted emails / letters have been consistently forwarded to the Planning Board and the University New England and have been maintained by the Planning Department.

RE: Case # 2024.34 Final Plan Review – Site Plan and Shoreland Zoning Review for the University of New England (UNE) / Proposed Construction of a Marine Science Center Research Pier to be located at 11 Hills Beach Road (Map #52, Lot 4) located in the City's Institutional (IN) Zoning District.

MEETING DATE: August 6, 2025, at 6:00 PM



University of New England (UNE) – proposed Marine Science Center Research Pier

The University of New England (UNE) campus is located along the Saco River in Biddeford, ME. The Marine Science Center is located on the waterfront at the easterly end of campus approximately opposite Camp Ellis in Saco. To support MSC research activities, UNE proposes to construct a pier from the shore adjacent to the MSC into the Saco River to provide an all-tide access facility for small and shallow draft vessels (skiffs, landing craft, up to approximately 3-foot draft), with tidally-restricted access for larger vessels.

RE: Case # 2024.34 Final Plan Review – Site Plan and Shoreland Zoning Review for the University of New England (UNE) / Proposed Construction of a Marine Science Center Research Pier to be located at 11 Hills Beach Road (Map #52, Lot 4) located in the City's Institutional (IN) Zoning District.

MEETING DATE: August 6, 2025, at 6:00 PM

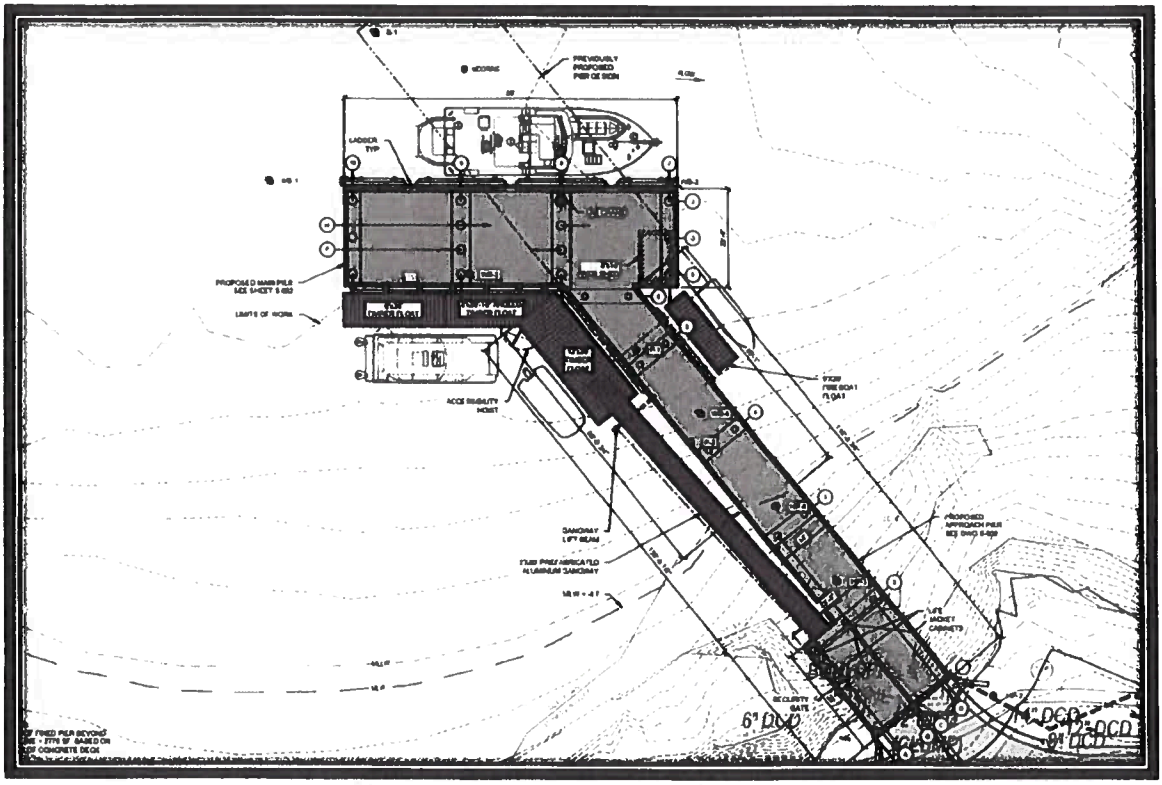

Marine Science Center Research Pier Detail

The proposed facility includes the following:

1. A pile supported pier structure extending from shore into the Saco River. The proposed pier includes an approximately 130-foot-long approach section extending from shore and an 80-foot-long pier head section oriented roughly parallel to the direction of flow in the river. The pier consists of a concrete superstructure on steel pipe piles, with timber fender piles for vessel berthing and floating docks, and a pile supported gangway lifting beam to allow the gangway ramp to be temporarily removed from the water. Site 7 (Preferred) Stormwater Management Report UNE Marine Science Center Pier September 2023, Revision B. April 2025 GEI Consultants, Inc.

2. A floating dock system consisting of one 8-foot by 24-foot float, one 8-foot by 26- foot 10-inch float, and one 12-foot by 30-foot gangway landing float to provide alltide vessel access for UNE's vessels on the west side of the pier, and a single 6-foot by 20-foot floating dock to provide a tie-up location for the City of Biddeford Fire Boat on the east side of the pier.

3. An 80-foot by 5-foot gangway, to provide ADA compliant access to the float system.

4. An upland access road connecting the existing road at the MSC to the proposed pier, including associated site grading, drainage, and stormwater management features.

These proposed improvements will result in a total increase in the impervious area totaling 0.249 acres. The increase in the impervious area will be managed by the two bioretention filter cells to the north of the Girard Marine Science Center. Runoff will be conveyed to the bioretention filter cells via proposed vegetated swales along the low side of the superelevated access road. The bioretention filter cells will slowly release captured stormwater via underground pipe into the Saco River/Atlantic Ocean.

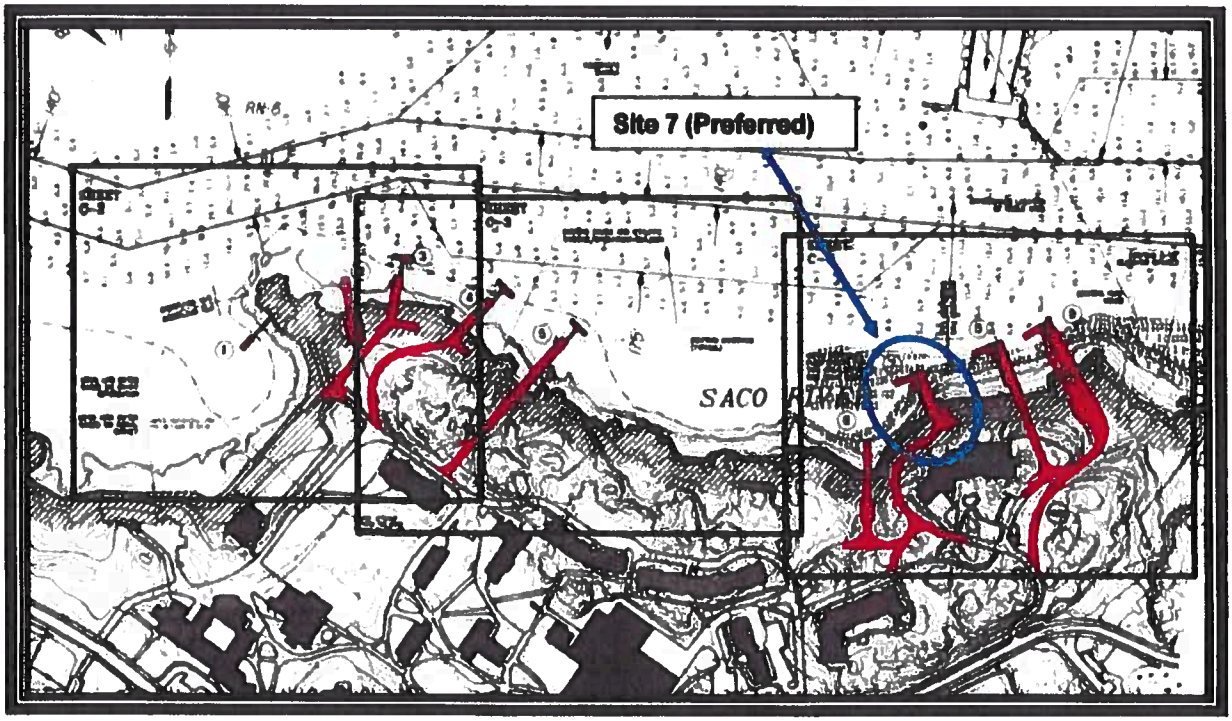

Fig. 1 – Alternative Sites Evaluated in 2008-2010 Study

As outlined in their project narrative, multiple locations for the pier were evaluated Alternative locations *"for more than 10 years and has gone through extensive planning and alternatives analysis in arriving at the design that is proposed"*.

The University's consultants (Daniel Bannon, P.E., CFM and Barney Baker, P.E. of GEI Consultants) evaluated alternate pier locations and concluded that:

> *"GEI has reviewed the concerns raised by the Saco and Biddeford Harbormasters and evaluated their impact on the proposed design, reviewed the history of planning that led to the current design location and layout, and reviewed the potential advantages and disadvantages offered by the suggested alternative pier location. <u>While we respectfully value the input and suggestions for an alternative layout, it is our opinion that the proposed design represents the preferred balance of project requirements and site constraints. Compared to the suggested alternative, the proposed design achieves adequate water depth, provides safe navigation, results in a structure of smaller overall dimensions with less coastal wetland impact, does not appear to be subject to significant sediment deposition, and locates the pier in a location that is</u>*

*less exposed to current and icing impacts. For these reasons, GEI recommends that the current design and pier location be maintained" (*Note: Emphasis added).*

After completing the pier feasibility study and identifying Site 7 as the preferred pier location, UNE undertook additional effort in 2015-2016 to study alternative pier layouts that would address the functional and vessel needs of the marine science curriculum as well as the site exposure, berthing conditions, access requirements, and associated site impacts. During this work, numerous alternative pier layouts were considered. Alternate locations evaluated water depth, exposure to currents, location relative to river sediment deposition, exposure to icing, and impacts to moorings.

3. PROJECT DATA/INFORMATION

1.	Applicant:	University of New England 11 Hills Beach Road Biddeford, ME
2.	Owner of Property:	University of New England 11 Hills Beach Road Biddeford, ME
3.	Agent:	Tom Saucier, P.E. Site Design Associates 23 Whitney Way Topsham, ME 04086
4.	Surveyor:	Tom Saucier, P.E. Site Design Associates 23 Whitney Way Topsham, ME 04086
5.	Project Location:	11 Hills Beach Road
6.	Project Tax Map #/Lot #:	Tax Map 52 Lot 4
7.	Lot Size:	49.9-acres
8.	Base Zoning:	Institutional (IN)
9.	Overlay Zoning:	Shoreland Zoning
10.	Existing Use:	Saco River
11.	Proposed Use:	Marine Research Pier
12.	Approvals Required:	Site Plan and Shoreland Review
13.	Uses in the Vicinity:	University
14.	Waivers Requested:	E. **Article XI.II. Section 5.B.1.a.** (post development runoff) F. **Article XI.II. Section 5.B.1.e.3.** (Slopes steeper than 2:1 in ledge). G. **Article VI. Section 26.F.:** (cut or fill slopes that exceed 3 horizontals to 1 vertical). H. **Article XIV. Section 15.H.4.** (Road and driveway banks shall be no steeper than a slope of 2 horizontal to 1 vertical).

18.	Waivers Granted on July 16, 2025.	A. **Article XI.II. Section 5.B.1.a.** (post development runoff) B. **Article XI.II. Section 5.B.1.e.3.** (Slopes steeper than 2:1 in ledge). C. **Article VI. Section 26.F.:** (cut or fill slopes that exceed 3 horizontals to 1 vertical). D. **Article XIV. Section 15.H.4.** (Road and driveway banks shall be no steeper than a slope of 2 horizontal to 1 vertical).
22.	Other Non-City Permits Required:	N/A
23.	LDR Attachment A: Fees Paid:	Yes
25.	Planning Board Review History: Sketch Plan Review - May 21, 2025; Site Walk June 9, 2025; Preliminary Review (Tabled)- June 18, 2025; Site Walk #2 – July 9, 2025; Preliminary Review (#2) – July 16, 2025 – Preliminary Approval and Waivers approved. Final Plan Review – August 6, 2025.	

4. REVIEW PROCESS

Per City ordinance, this application is subject to Site Plan (Land Development Regulations, Article XI) review and Shoreland Zoning approval by the Planning Board. Below is a list of required agency reviews.

- Saco River Corridor Commission (SRCC) – Approval 9-13-2024 Attached pages # 282-287 of the Applicants application.
- Department of Environmental Protection (MDEP), Findings of Fact (FOF) and Order Pages # 288-295, dated April 11, 2025, of the Applicants application.
- U.S. Army Corps of Engineers, New England District, approval dated March 28, 2025. Pages # 296-298 of the Applicants application.
- Maine Historic Preservation Commission, Approval dated May 15, 2023.
- City of Biddeford letter from Former City Manager (James Bennett) regarding a "Notice to Proceed with External Reviews" / compliance with City Code 74-35, subsections (c) items 1-10, dated August 19, 2025, Pages #302-303 of the Applicants application.

5. **SITE PLAN APPROVAL / SITE DESIGN CRITERIA:** Below are the specific Site Review Criteria from the City of Biddeford's Code of Ordinances, Part III Land Development Regulations - Article XI Site Plan Review - Section 5 Site design and development criteria:

Site design criteria. The design standards presented here are minimum in nature; the applicant may provide further details to the presented plan. At the same time, some of these standards may not apply to a specific project; the applicant may request in writing waivers from any point following. All waivers must be added as notes to the approved plan and shall be considered conditions of approval.

Besides, the following standards projects presented under this article shall be subject to the performance standards specified in Article VI of this ordinance (Note: Article VI does not contain any additional performance standards for "piers or docks").

1. Drainage.
   a. The rate of post-development runoff shall not exceed that of predevelopment. Details of catch basins, drainage pipes and retention/detention ponds shall be provided as needed with the application. All detail sheets shall bear the seal and signature of a professional engineer, licensed in the State of Maine.

   b. A written engineering report describing the impacted watershed area, projected runoff, and any projected downstream impact shall be required.

   c. Drainage easements shall be established for any concentrated off-site drainage. Such easement shall state who has the responsibility to maintain the easement. Easement documents shall be reviewed, at applicant expense, by the Director of Public Works, City Engineer, and the City Solicitor, as to exactness of content. Plans shall include the location of easements.

   d. Where it is determined by the City Engineer or consultant hired by the Board, that the additional runoff incident to the development of the projected site will overload an existing downstream drainage facility, the Board may require the provision of water-retarding facilities or other improvements to alleviate said problem.

   e. Development in specific areas of concern shall provide detailed information and address specific issues in relation to drainage:

1. Parcels situated within the federally designated flood hazard zone, as per Flood Hazard Boundary Map H01-18, dated May, 1984, as amended, shall comply with all applicable federal regulations relating thereto.

2. One-hundred-year flood elevation line shall be included where applicable.

3. No slope shall be created which results in a slope of more than two feet horizontal to one foot vertical unless proper retaining walls are proposed.

f. Drainage improvements shall be scheduled to be constructed as part of the first portion of any project where drainage improvements are proposed.

g. Special bonding of 1 1/2 times the anticipated cost of said improvements shall be incorporated by the developer to insure that improvements are placed and that they function as planned. No portion of this special bond may be released until the project, or that portion of the project for which the drainage improvement is proposed has been constructed, and until so released by the Planning Board, with the recommendation from the Director of Public Works and the City Engineer.

Applicants' Comments: *A Stormwater Management Report is attached. The report submitted demonstrates compliance with Maine Department of Environmental Protection (DEP) Basic and General standards. The project will include bioretention filters designed to DEP BMP standards for enhancement of stormwater runoff quality.*

Staff Comment: *The above standards have / are being met, as the project complies with the Maine Department of Environmental Protection (DEP) Basic and General standards and permits from the agency.*

2. Utilities.

a. All utilities, including electric, gas, water/sewer, shall be shown on the plat, and separate detail sheets as needed.

b. Accessways, storage, and parking areas shall be graded and improved with pavements, curbs, gutters, sidewalks, storm drainage facilities, outdoor lighting, etc.

c. All accessways/drives and service ways shall be of sufficient width and configuration to accommodate the prospective traffic and to afford satisfactory access to police, firefighting and other such service.

d. Any proposal within 200 feet of a public water or sewer line(s) must connect to system(s). Applicant must supply copies of letters from the environmental specialist of the City of Biddeford for sewer, and water company shall confirm details of connection and/or concerns.

e. Whether or not a municipal water system is proposed, the following items must be specified in application narrative and on plat:

1. Rated normal capacity and gallons per minute at prime use time.

2. Rated maximum capacity and gallons per minute at prime use time.

3. Residual pressure of proposed tap line.

f. Where nondomestic sanitary discharge (any discharge into the public sewer system containing other than normal household wastes) is anticipated, such effluent shall be identified and comply with any and all federal, state, and local laws, ordinances, rules, and regulations. Where any such laws, ordinances, rules and regulations may overlap or may be inconsistent, the more stringent shall apply.

g. Where public sanitary service is available, or where developers must extend such service, applicants must apply for and receive a discharge permit from the City Council of the City of Biddeford prior to approval by the Planning Board.

h. Where practicable, all electrical and telephone utilities shall be placed underground.

Staff Comment: *Power will be fed underground to the pier from the Girard Marine Science Center.* ***The proposed utilities address and meet this standard.***

3. Parking.

a. A parking plan shall delineate the number of parking and delivery or loading spaces and the physical arrangement. Details of parking plan shall conform to the provisions of the off-street parking section of Article VI of this Zoning Ordinance.

b. No on-street parking, delivery or loading is permitted, except where specifically allowed by the Planning Board.

c. Whenever a use existing on the effective date of these regulations is changed thereafter to a new use, parking facilities and access shall be provided as required herein for such new uses.

d. In the case of multifamily projects the number of required parking spaces should be increased 5% to allow for visitor parking.

e. Parking lots shall be landscaped and/or screened to provide for a pleasing visual effect and blending in with the surrounding area.

f. Lots shall be illuminated for security purposes. The lighting shall be designed in such a way that off-site glare is minimized.

g. Adequate space shall be allowed for the accumulation of snow during the winter plowing months.

Staff Comment: *The Girard Marine Science Center provides adequate parking for the associated / "accessory structure (pier)" as the students and faculty of Science Center will be the same users of the proposed pier.* ***The application meets this standard.***

4. Structural layout and design. All proposed structures or additions to existing structures shall address the following items:

a. Design of buildings.

1. Buildings shall be designed to blend harmoniously with the surrounding structures in the neighborhood. New structures should be designed so as to complement the style of the abutting

older structures. A photograph, architectural rendering or other representation of the proposed structure must accompany the application for site review.

2. In the I-3 Zone structures shall have a facade sheath in brick or other masonry finish. Other facade finishes may be used when it can be clearly shown to the board that such facing material will advance the City's intent to make the I-3 area a more attractive gateway to the City.

Staff Comment: *No buildings are being proposed with the exception of the small storage shed located on the proposed pier. The project is also not located within the I-3 area so brick and / or masonry standards do not apply.*

b. Setbacks. Proposed structures shall be set back from roadways, in conformance with requirements for the particular zone; and shall be set in such a way as to blend in harmoniously with buildings on abutting properties, and to allow for adequate landscaping of the front yard.

Staff Comment: *The research pier is sited in conformance with all setback requirements. The proposed pier meets all setbacks.*

c. Fire protection.

1. All proposed structures and additions to existing buildings must be designed to meet existing fire protection standards.

2. Fire hydrants and fire escapes must be clearly presented on plats.

3. Clear ways around buildings must be maintained to provide for 360° access to structures.

4. Areas in front of structures must be kept clear of parking spaces to allow for emergency access.

5. Buildings should be designed with internal sprinkler systems. This is particularly the case in terms of multifamily and industrial/warehousing structures, and structures that will be located in areas that are far or difficult to reach from fire stations.

6. In residential developments of 24 units or more, or buildings of 5,000 square feet or more, a central alarm system to the central fire station shall be installed, unless a negative recommendation, in writing, is received from the Fire Marshal.

7. In residential developments of 24 dwelling units or more, or office buildings with more than two separate establishments or places of business, a "knock box" shall be provided and indicated on plat. This box shall be in accordance with the specifications and standards as prescribed by the Fire Department of the City of Biddeford.

8. Whenever gas, either natural or propane or other type, is proposed to be used on-site, a separate external shutoff valve shall be provided for each building on the site. The valve location shall be indicated on the plat and approved in writing by the fire chief/fire marshal.

Staff Comment: *Based on input from the fire department, the road width was increased to 20 ft per NFPA standards. The turnaround meets the city required dimensional standards and has been modelled to accommodate fire apparatus. The only concern raised to date is the Fire Departments turn-around at the head of the pier. The Applicants have agreed that once constructed the BFD will bring their larges apparatus to the side to verify that the turn-around constructed meets the BFD needs. If the turn-around needs to be modified, the BFD will require minor adjustments to the turn-around to the satisfaction of the Fire Chief. A condition has been added to the recommended Conditions of Approval (COA).*

d. Landscaping.

1. All sites must be landscaped with vegetation that will act to:
   (a) Reduce the impact of lighting, vehicular and structural, on abutting properties;

   (b) Reduce the impact of proposed structures on the privacy of abutters;

   (c) Make the site more attractive to the average viewer.

2. Landscaping measures will be indicated on the plat by drawings and narrative note. The use of trees and shrubs for fencing and shading is strongly encouraged. Care must be taken to ensure that tree, etc., are placed in such a fashion that in time they will cause minimum impact on abutting properties and public roadways and travelways, particularly as they grow.

3. Whenever possible existing vegetation shall be preserved and incorporated into the landscaping scheme of the project.

4. Each proposal will include a detailed landscaping plan. This plan will include the location, type and size of existing mature trees (those trees over eight inches in diameter).

5. Particular attention should be paid to offsetting the visual impact of new structures in areas where there may be a stark contrast with the existing design trend of the neighborhood.

Staff Comment:

The revegetation plan has been developed to meet the City of Biddeford's Shoreland Zoning requirements as well as to preserve a visual buffer for the access drive to minimize visibility from the water to the greatest extent possible, while achieving the required clearing and considering functional requirements such as snow plowing at the turnaround. The revegetation plan also meets the requirements of the Saco River Corridor Commission (SRCC) who issued a permit for the project.

Staff Comment: *Revegetation Plan: The revegetation plan, drawing C-15, is intended to meet the city of Biddeford's shoreland zoning requirements.*
Details are as follows:

- *49 trees are being removed with 21 of those within the 50-foot HAT setback*
- *Approximately 5,850 SF of understory duff later and low growth vegetation (predominantly non-native invasive honeysuckle) is being disturbed within 50 feet of the HAT.*
- *5 tree species are proposed in approximate equal quantities with the evergreen trees located between the road shoulder grading and the top of embankment where they are anticipated to fit under the remaining mature forest canopy, and between existing trees and ledge. Field verification during construction will be required to ensure final plant locations are feasible if shallow ledge or significant remaining tree root stock is present.*
- *3 shrubs (2 evergreen and 1 deciduous) are proposed to plant at the toe of the road embankment as well as in areas around the turnaround where fitting larger trees will be challenging given limited space and the need to maintain an area for plowed snow.*
- *Deciduous trees are spread throughout the area.*
- *The bioretention cells will be filled with a mix of wet, drought and salt tolerant shrubs and perennials which are shown on the plan as a hatched area. The notes on the plan and drawing C-16 plant schedule describe the random pattern mixing of these plants throughout the bio retention cells.*
- *All other disturbed areas will be planted with a native roadside mix of perennial grasses and flowers. It is recommended that this area be mowed once a year in the fall to maintain the mix of plants. If mowed more often, it will revert to mostly lawn grasses. • Mature plant sizes are listed on the plant list to give a sense of the amount of screening that may occur over time.*
- *The applicants are proposing the removal of invasive plant species and a complete replanting of the disturbed areas with native Maine species which Staff believes meet the above standards*

The proposed development meets these standards.

e. Service, storage and utility areas.

1. All service, storage, and utility areas shall be designed to the side or rear yard of a proposed or existing building or structure, and such areas shall be appropriately screened/buffered by walls, fences, earth berms, or vegetation.

2. Proposed utility elements shall be adequately screened; and, if producing sound, baffled upon Planning Board request.

3. Trash receptacles, dumpsters, storage sheds, etc., shall be shown on plat.

Staff Comment: *The research pier includes a small storage shed for equipment associated with the pier. The pier storage is the only storage / service area. The proposed storage / utility areas are minimal in size but are large enough to accommodate the storage needs of pier related activities.*

f. Paving, parking, and storage areas.

1. No paving, parking, or storage shall be permitted within the required setback of any side or rear property line;

2. No paving, parking, or storage (except for entrances/exits) shall be permitted within 25 feet of any front property line. These unpaved nonparking or nonstorage areas shall be maintained as landscaped areas or open spaces.

Staff Comment: *No parking is being planned for the proposed pier. This standard is not applicable.*

g. Handicapped accessibility.

1. Pedestrian walkways, entrances and exits designed for use by the handicapped shall be provided as required by any and all federal, state, or local laws, ordinances, rules and regulations or as requested by the Planning Board.

2. Handicapped parking spaces and accessways shall be indicated on plat whenever they are to be employed.

Staff Comment: *The proposed research pier is handicapped accessible. The project meets this standard.*

h. Loading facilities.

1. Loading facilities for new structures shall be designed to the rear or side of any and all proposed or existing building or structure.

2. Loading facilities shall be designed in accordance with the applicable federal, state, or local laws, ordinances, codes, rules and regulations and shall be off-street or accessible via a public street.

Staff Comment: *No loading areas are being proposed as part of the pier project. This standard does not apply.*

i. Parking, loading, and protective buffers.

1. All parking, loading and protective buffers shall be situated on the same tract or parcel of land as the primary use building or structure.

2. The maximum nonvegetated area of the land area being developed and reviewed shall be 75%.
3. Any parking or paving, including all access ways, egress ways, entrances and exits on streets for both pedestrian and vehicular use, shall not cover or occupy more than 30% of the land area being developed and reviewed and shall be included with the maximum nonvegetated area.

4. In all applications, a minimum of 25% of the land area being developed and reviewed shall remain in its natural state or shall be maintained as appropriately landscaped area.

5. All buildings or structures shall be sited in conformance with established setbacks of the particular zone. No building or structure may be built within the required side yard setback. The Planning Board may require greater setbacks in areas such as turnpikes, water bodies, railroads, etc.

6. All buffered or screened areas shall be densely planted with shrubs or trees which are respectively at least two or three feet high at the time of planting and are of a type which may be expected to form a year-round dense screen of at least five feet high within three years, provided that such screening shall not obstruct the view of oncoming traffic when entering or exiting the site. An additional cash bond to cover the cost of replacement of these plantings may be required. The term of the bond shall be equal to three years from the time of planting. At the end of the three years any unused portion of this security will be returned to the applicant along with accrued interest.

Staff Comment: *The proposed development does not include new parking areas. The non-vegetated area of the land being developed will be less than 75% and a minimum of 25% of the land area being developed either remains in its natural state or consists of landscape and lawn areas. New landscaping is being proposed in all areas being disturbed by the pier construction as discussed within this document and Applicants development plans. The project meets this standard.*

j. Open space.

1. In new residential developments: Open space shall be provided in the ratio of 1,000 square feet for each dwelling unit. This open space shall be identified as either a "green space" or as "recreational space."

2. Whenever practicable, open space in a residential development shall include a mixture of active and passive recreational opportunities to benefit the various residents of the project. Such opportunities would include, but are not limited to, ball and other playing fields, tennis courts, etc.
3. In large-scale projects hiking trails or nature paths are encouraged.

4. In projects that abut rivers or streams a public easement is encouraged, to provide access to a limited natural resource.

5. The plan shall reflect the natural capabilities of the site to support development. Buildings, lots, and support facilities will be clustered in those portions of the site that have the most suitable conditions for development. Environmentally sensitive areas, including but not limited to wetlands, steep slopes, floodplains, significant wildlife habitats, fisheries, scenic areas, habitat for rare and endangered plants and animals, unique natural communities and natural areas, and sand and gravel aquifers will be maintained and preserved to the maximum extent. The development shall include appropriate measures for protecting these resources, including but not limited to modification of the proposed design of the site, timing of construction, and limiting the extent of excavation.

Staff Comment: *The proposed development does not include any residential uses but has been designed around the natural environment. Areas of disturbance will be replanted with natural Maine species and graded to support the proposed pier and it's access. The project meets the above standards.*

k. External lighting.

1. All existing/proposed external lighting must be included on plat. Lighting will be described as needed.

2. Lighting shall be designed to provide adequate illumination on-site, especially in parking areas, walkways and structural entrances, and site entrance from roadways. At the same time all illumination will be designed to mitigate adverse impact on abutting properties and structures, and traffic.

Staff Comment: *An electrical site plan is included in the drawing set which shows the site lighting. Full cut off fixtures will be utilized, and lighting will be the minimum necessary for safety and functionality. The project meets these standards.*

l. Signs.

1. All proposed signs shall meet standards provided in Article VI of the Zoning Ordinance of the City of Biddeford.

2. Signs shall be indicated on plat.

3. A detail of sign design shall be submitted as part of the application for site review.

Staff Comment: *No new signage is being proposed for this project. Any proposed signs shall meet the City's Sign Ordinance.*

m. Historic and archaeological resources. If any portion of the site has been identified as containing historic or archaeological resources, the development shall include appropriate measures for protecting these resources, including but not limited to modification of the proposed design of the site, timing of construction, and limiting the extent of construction.

Staff Comment: *See attachment 10 for a letter from the Maine Historic Preservation Commission clearing the project. The proposed development meets this standard.*

6. **Shoreland Zoning Land Use Standards**: In addition to the Site Plan Approval / Site Design Criteria outlined above, the project is required to comply with the applicable standards of Article XIV. Section 15.C. which are listed below:

15 C. Piers, docks, wharfs, bridges and other structures and uses extending over or below the normal high-water line of a water body or within a wetland.

1. Except as provided in Section 15C11 and Section 15X7, no more than one pier, dock, wharf or similar structure extending or located below the normal high-water line of a water body or within a wetland is allowed on a single residential lot; except that when a single lot contains at least twice the minimum shore frontage as specified in Section 15A, a second structure may be allowed and may remain as long as the lot is not further divided.

Staff Comment: *Standard not applicable*

2. *Access from shore shall be developed on soils appropriate for such use and constructed so as to control erosion.*

Staff Comment: *Access from shore will be developed on soils appropriate for the use. A detailed erosion control plan has been prepared for the project. The proposal meets this standard.*

3. The location shall not interfere with existing developed or natural beach areas.

Staff Comment: *The proposal does not interfere with existing developed or natural beach areas. The application meets this standard.*

4. The facility shall be located so as to minimize adverse effects on fisheries.

Staff Comment: *The facility has been located to minimize adverse effects on fisheries. The plan was reviewed by the National Marine Fisheries Service. The application meets this standard.*

5. The facility shall be no larger in dimension than necessary to carry on with the activity and be consistent with the surrounding character and uses of the area. A temporary pier, dock, or wharf in non-tidal waters shall not be wider than six feet for non-commercial uses.

Applicant Comment: *The facility size is the minimum necessary to carry out current and future research activities and is consistent with the surrounding character and uses of the area, including the Camp Ellis pier on the opposite side of the river.*

Staff Comment: *The proposed project meets this standard.*

6. No new structure shall be built on, over or abutting a pier, wharf, dock or other structure extending beyond the normal high-water line of a water body or within a wetland unless the structure requires direct access to the water body or wetland as an operational necessity.

Staff Comment: *Standard not applicable*

7. New permanent piers and docks on nontidal waters shall not be permitted unless it is clearly demonstrated to the Planning Board that a temporary pier or dock is not feasible, and a permit has been obtained from the Department of Environmental Protection, pursuant to the Natural Resources Protection Act.

Staff Comment: *A temporary pier / dock at this location at this location is not feasible for the proposed use. The Applicant has obtained approval from the Department of Environmental Protection (DEP).*

8. No existing structures built on, over or abutting a pier, dock, wharf or other structure extending beyond the normal high-water line of a water body or within a wetland shall be converted to residential dwelling units in any district.

Staff Comment: *Standard not applicable*

9. Except in the General Development District, structures built on, over or abutting a pier, wharf, dock or other structure extending beyond the normal high-water line of a water body or within a wetland shall not exceed 20 feet in height above the pier, wharf, dock or other structure.

Staff Comment: *An 8 ft x 10 ft shed for storage of life jackets, tools, and research equipment is proposed on the pier, and is an operational necessity. The shed will not exceed 20 ft in height.* ***The proposal meets this standard.***

NOTE: Permanent structures projecting into or over water bodies shall require a permit from the Department of Environmental Protection pursuant to the Natural Resources Protection Act, Title 38 M.R.S.A., Section 480-C.

Staff Comment: *The Applicants have received approval for the proposed dock from the Maine Department of Environmental Protection (MDEP)*

10. *Vegetation may be removed in excess of the standards in Section 15P of this ordinance in order to conduct shoreline stabilization of an eroding shoreline, provided that a permit is obtained from the Planning Board. Construction equipment must access the shoreline by barge when feasible as determined by the Planning Board.*

Applicant Comments:

a. When necessary, the removal of trees and other vegetation to allow for construction equipment access to the stabilization site via land must be limited to no more than 12 feet in width. When the stabilization project is complete, the construction equipment accessway must be restored.

b. Revegetation must occur in accordance with Section 15S.

NOTE: A permit pursuant to the Natural Resource Protection Act is required by the Department of Environmental Protection for shoreline stabilization activities.

Staff Comment: *The applicant has submitted a detailed erosion control and revegetation plan for the project which adequately addresses erosion control and site revegetation standards.* ***The applicant meets these standards.***

11. A deck over a river may be exempted from the shoreland setback requirements if it is part of a downtown revitalization project that is defined in a project plan approved by the legislative body of the municipality, and may include the revitalization of structures formerly used as mills that do not meet the structure setback requirements, if the deck meets the following requirements:

Staff Comment: *The proposal is for a dock/pier, so the above standards related to "decks" are not applicable.* ***Standard not applicable.***

8. **FINDINGS OF FACT:** The proposed project will need to meet the standards below at Final Board review:

   1) The proposed use meets specific requirements set forth in this ordinance and would be in compliance with applicable state or federal laws;

2) The proposed use would not create fire safety hazards by providing adequate access to the site, or to the buildings on the site, for emergency vehicles and would not create hazards through the storage of chemicals and wastes;

3) The proposed exterior lighting, where allowed, would not create hazards for motorists traveling on adjacent public streets or is adequate for the safety of occupants or users of the site or would not damage the value and diminish the usability of adjacent properties;

4) The provisions for buffers and on-site landscaping provide adequate protection to neighboring properties from detrimental or unsightly features of the development;

5) The proposed use would not have a significant, detrimental effect on the use and peaceful enjoyment of abutting property as the result of noise, vibrations, fumes, odors, dust, glare, hours of operation, or other causes;

6) The provisions for vehicular loading and unloading and parking and for vehicular and pedestrian circulation on the site and onto adjacent public streets would not create hazards to public safety or traffic congestion;

7) The proposed use would generate a volume of traffic that can reasonably be accommodated by the existing road network, or would not create unreasonable traffic hazards or would not exacerbate an existing traffic hazard, or would not create unreasonable traffic congestion;

8) The proposed use would not have a significant, detrimental effect on the value of adjacent properties which could be avoided by reasonable modification of the proposal;

9) The proposed use would not have an adverse impact on the privacy of the residents of the immediate area (within 500 feet) which could be avoided by reasonable modification of the proposal;

10) The proposed use would be in compliance with Biddeford's Comprehensive Plan;

11) The proposed use would not have an adverse impact on the immediate neighborhood or the community relative to architectural design, scale, bulk and building height, identity and historical character, or visual integrity, which could be avoided by reasonable modification of the proposal;

12) The design of the site would not result in significant flood hazards or flood damage or would be in conformance with applicable flood hazard protection requirements;

13) Adequate provision has been made for the disposal of wastewater or solid waste or for the prevention of ground or surface water contamination;

14) Adequate provision has been made to control erosion or sedimentation;

15) Adequate provision has been made to handle stormwater runoff or other drainage problems on the site; and the proposed development will not unduly burden off-site surface water systems;

16) The proposed water supply would meet the demands of the proposed use for fire protection purposes;

17) Adequate provision has been made for the transportation, storage, and disposal of hazardous substances and materials as defined by state law;

18) The proposed use would not have an adverse impact on scenic vistas or on significant wildlife habitat or wetland areas and water bodies which could be avoided by reasonable modification of the proposal;

19) When located in the Shoreland Zone, the proposed use would meet the purposes of Shoreland Zoning as identified in Article XIV, Section 1 (Purposes) of this ordinance.

***Staff Comment**: In reviewing the application, Staff finds that the application satisfies the City's Shoreland Zoning Ordinance and Site Plan criteria.*

9. SAMPLE MOTIONS FOR SITE PLAN AND SHORELAND ZONE APPROVAL:

The Application before the Board is a "Preliminary Plan", so a formal vote is required.

A. Motion to Approve: I motion to APPROVE Case # 2024.34 Final Plan – Site Plan and Shoreland Zoning Review for the University of New England (UNE) / Proposed Construction of a Marine Science Center Research Pier to be located at 11 Hills Beach Road (Map #52, Lot 4) located in the City's Institutional (IN) Zoning District, with the adoption of the Findings of Fact (FOF) and recommended Conditions of Approval (COA).

B. Motion to Deny I motion to DENY Case # 2024.34 Final Plan – Site Plan and Shoreland Zoning Review for the University of New England (UNE) / Proposed Construction of a Marine Science Center Research Pier to be located at 11 Hills Beach Road (Map #52, Lot 4) located in the City's Institutional (IN) Zoning District, for the following reasons:

1)_____.

2)_____.

3)_____.

C. Motion to Table: I motion to TABLE Case # 2024.34 Final Plan – Site Plan and Shoreland Zoning Review for the University of New England (UNE) / Proposed Construction of a Marine Science Center Research Pier to be located at 11 Hills Beach Road (Map #52, Lot 4) located in the City's Institutional (IN) Zoning District, for the following reasons:

1) _____.

2) _____.

RE: Case # 2024.34 Final Plan Review – Site Plan and Shoreland Zoning Review for the University of New England (UNE) / Proposed Construction of a Marine Science Center Research Pier to be located at 11 Hills Beach Road (Map #52, Lot 4) located in the City's Institutional (IN) Zoning District.

MEETING DATE: August 6, 2025, at 6:00 PM

3) _____.

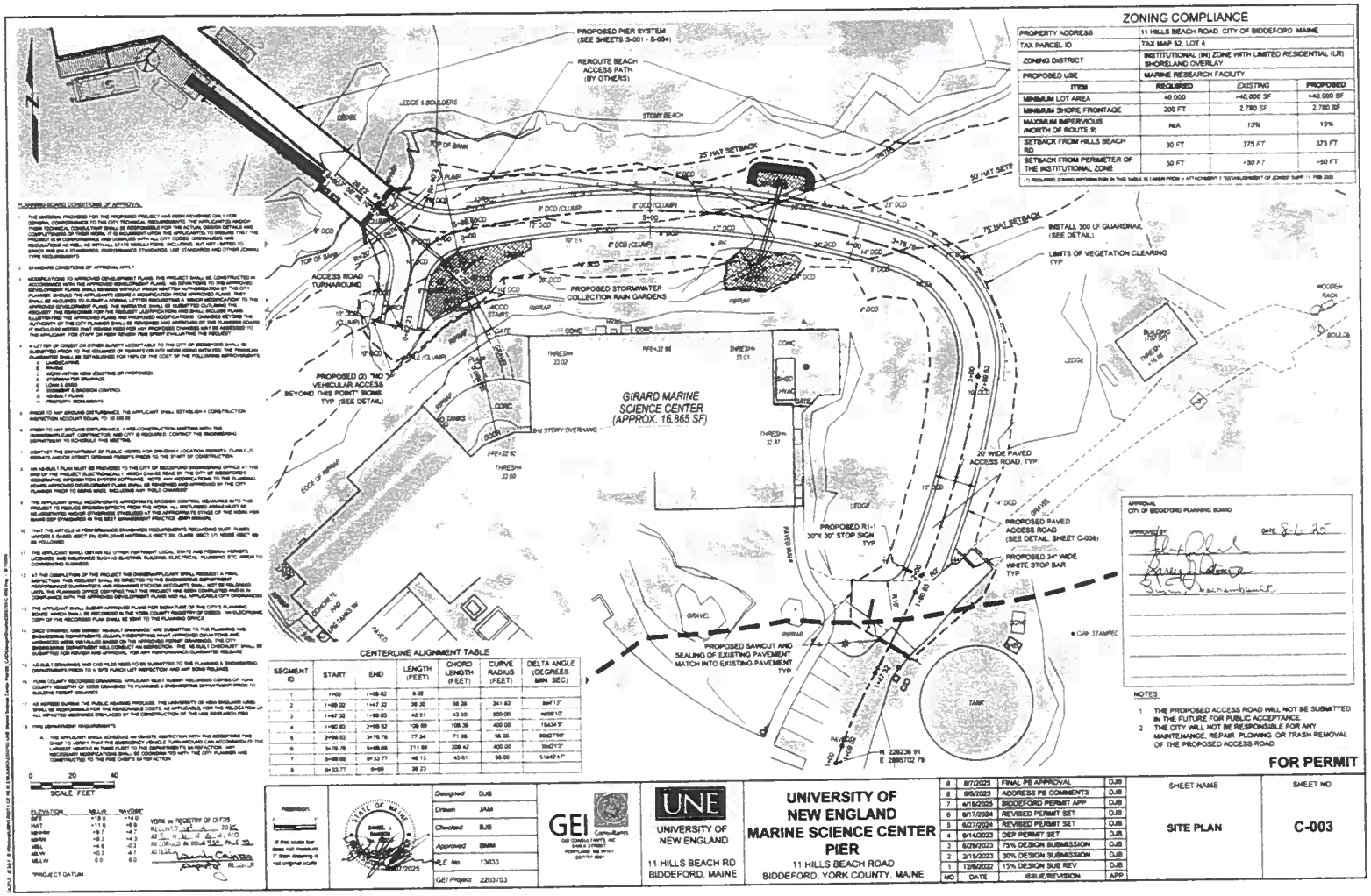

ZONING COMPLIANCE

PROPERTY ADDRESS	11 HILLS BEACH ROAD, CITY OF BIDDEFORD, MAINE		
TAX PARCEL ID	TAX MAP 52, LOT 4		
ZONING DISTRICT	INSTITUTIONAL (IN) ZONE WITH LIMITED RESIDENTIAL (LR) SHORELAND OVERLAY		
PROPOSED USE	MARINE RESEARCH FACILITY		
ITEM	REQUIRED	EXISTING	PROPOSED
MINIMUM LOT AREA	40,000	>40,000 SF	>40,000 SF
MINIMUM SHORE FRONTAGE	200 FT	2,780 SF	2,780 SF
MAXIMUM IMPERVIOUS (NORTH OF ROUTE 9)	N/A	19%	19%
SETBACK FROM HILLS BEACH RD	50 FT	375 FT	375 FT
SETBACK FROM PERIMETER OF THE INSTITUTIONAL ZONE	50 FT	>50 FT	>50 FT

(1) REQUIRED ZONING INFORMATION IN THIS TABLE IS TAKEN FROM = ATTACHMENT 2 "ESTABLISHMENT OF ZONES" SUPP - 11 FEB 2020

PLANNING BOARD CONDITIONS OF APPROVAL

1. THIS SITE PLAN, PROVIDED FOR THE PROPOSED PROJECT HAS BEEN REVIEWED ONLY FOR GENERAL CONFORMANCE TO THE CITY TECHNICAL REQUIREMENTS. THE APPLICANT'S AND/OR THEIR TECHNICAL CONSULTANT SHALL BE RESPONSIBLE FOR ACTUAL DESIGN DETAILS AND CONSTRUCTION OF THE PROJECT. IT IS THE APPLICANT'S RESPONSIBILITY TO ENSURE THAT THE CONSTRUCTED IMPROVEMENTS ARE COMPLIANT WITH ALL CITY CODES, ORDINANCES AND REGULATIONS AS WELL AS WITH ALL STATE REGULATIONS, INCLUDING, BUT NOT LIMITED TO, STORMWATER, EROSION, PERFORMANCE STANDARDS, USE STANDARDS AND OTHER ZONING REQUIREMENTS.
2. STANDARD CONDITIONS OF APPROVAL APPLY.
3. MODIFICATIONS TO APPROVED DEVELOPMENT PLANS: THIS PROJECT SHALL BE CONSTRUCTED IN ACCORDANCE WITH THE APPROVED DEVELOPMENT PLANS. NO DEVIATIONS TO THE APPROVED DEVELOPMENT PLANS SHALL BE MADE WITHOUT PRIOR WRITTEN APPROVAL FROM THE CITY PLANNER. ENGINEER TO SUBMIT A FORMAL LETTER REQUESTING A MINOR MODIFICATION FROM APPROVED PLANS. THAT SHALL BE ACCOMPANIED BY SUBMITTAL OF REVISED DEVELOPMENT PLANS. THE REVISED DEVELOPMENT PLANS, THE NARRATIVE SHALL BE SUBMITTED OUTLINING THE REQUEST. THE MEMORANDUM FOR THE REQUEST JUSTIFICATION AND SHALL INCLUDE PLANS ILLUSTRATING THE APPROVED PLANS AND PROPOSED MODIFICATIONS. DRAWINGS RETAINING THE AUTHORITY OF THE CITY PLANNER SHALL BE REVIEWED AND APPROVED BY THE PLANNING BOARD IF SHOULD BE NOTED THAT REVIEW FEES FOR ANY PROPOSED CHANGES MAY BE ASSESSED TO THE APPLICANT FOR STAFF OR PEER REVIEW TIME SPENT EVALUATING THE REQUEST.
4. A LETTER OF CREDIT OR OTHER SURETY ACCEPTABLE TO THE CITY OF BIDDEFORD SHALL BE SUBMITTED PRIOR TO THE ISSUANCE OF PERMITS OR SITE WORK BEING WITH FEE. THE PERFORM GUARANTEE SHALL BE SET ABLISHED FOR 100% OF THE COST OF THE FOLLOWING IMPROVEMENTS:
   a. LANDSCAPING
   b. CURBING
   c. WORK WITHIN ROW (EXISTING OR PROPOSED)
   d. STORMWATER DRAINAGE
   e. LOAM & SEEDED
   f. SEDIMENT & EROSION CONTROL
   g. AS-BUILT PLANS
   h. PROPERTY MONUMENTS
5. PRIOR TO ANY GROUND DISTURBANCE, THE APPLICANT SHALL ESTABLISH A CONSTRUCTION INSPECTION ACCOUNT EQUAL TO $2,000.00.
6. PRIOR TO ANY GROUND DISTURBANCE, A PRE-CONSTRUCTION MEETING WITH THE OWNER/PLANT CONTRACTOR, AND CITY IS REQUIRED. CONTACT THE ENGINEERING DEPARTMENT TO SCHEDULE THIS MEETING.
7. CONTACT THE DEPARTMENT OF PUBLIC WORKS FOR DRIVEWAY LOCATION PERMITS, CURB CUT PERMITS AND/OR STREET OPENING PERMITS PRIOR TO THE START OF CONSTRUCTION.
8. AN AS-BUILT PLAN MUST BE PROVIDED TO THE CITY OF BIDDEFORD ENGINEERING OFFICE AT THE END OF THE PROJECT ELECTRONICALLY, WHICH CAN BE READ BY THE CITY OF BIDDEFORD'S GEOGRAPHIC INFORMATION SYSTEM SOFTWARE. NOTE ANY MODIFICATIONS TO THE PLANNING BOARD APPROVED DEVELOPMENT PLANS SHALL BE REVIEWED AND APPROVED BY THE CITY PLANNER PRIOR TO BEING MADE, INCLUDING ANY "FIELD CHANGES"
9. THE APPLICANT SHALL INCORPORATE APPROPRIATE EROSION CONTROL MEASURES INTO THIS PROJECT TO REDUCE EROSION EFFECTS FROM THIS WORK. ALL DISTURBED AREAS MUST BE RE-VEGETATED AND/OR OTHERWISE STABILIZED AT THE APPROPRIATE STAGE OF THE WORK PER MAINE DEP STANDARDS IN THE BEST MANAGEMENT PRACTICE (BMP) MANUAL.
10. THAT THE ARTICLE VI PERFORMANCE STANDARDS REQUIREMENTS REGARDING DUST, FUMES, VAPORS & GASES (SECT 29), EXPLOSIVE MATERIALS (SECT 30), GLARE (SECT 31), NOISE (SECT 32) SHALL BE FOLLOWED.
11. THE APPLICANT SHALL OBTAIN ALL OTHER PERTINENT LOCAL, STATE AND FEDERAL PERMITS, LICENSES AND INSURANCE SUCH AS ELECTRIC, BUILDING, ELECTRICAL, PLUMBING, ETC. PRIOR TO COMMENCING WORK.
12. AT THE COMPLETION OF THE PROJECT THE OWNER/APPLICANT SHALL REQUEST A FINAL INSPECTION. THIS REQUEST SHALL BE DIRECTED TO THE ENGINEERING DEPARTMENT. PERFORMANCE GUARANTEES AND REMAINING ESCROW ACCOUNTS SHALL NOT BE RELEASED UNTIL THE PLANNING OFFICE CERTIFIES THAT THE PROJECT HAS BEEN SATISFACTORILY AND IS IN COMPLIANCE WITH THE APPROVED DEVELOPMENT PLANS AND ALL APPLICABLE CITY ORDINANCES.
13. THE APPLICANT SHALL SUBMIT APPROVED PLANS FOR INSTRUMENT OF THE CITY'S PLANNING BOARD, WHICH SHALL BE RECORDED IN THE YORK COUNTY REGISTRY OF DEEDS. AN ELECTRONIC COPY OF THE RECORDED PLAN SHALL BE SENT TO THE PLANNING OFFICE.
14. ONCE CREATED, AND SIGNED, AS-BUILT DRAWINGS ARE SUBMITTED TO THE PLANNING AND ENGINEERING DEPARTMENTS CLEARLY IDENTIFYING WHAT APPROVED DEVIATIONS AND UNFORESEEN WORK WERE MADE BASED ON THE APPROVED PERMIT DRAWINGS. THE CITY ENGINEERING DEPARTMENT WILL CONDUCT AN INSPECTION. PER AS-BUILT CHECKLIST SHALL BE SUBMITTED FOR REVIEW AND APPROVAL FOR ANY PERFORMANCE GUARANTEE RELEASE.
15. AS-BUILT DRAWINGS AND CAD FILES NEED TO BE SUBMITTED TO THE PLANNING & ENGINEERING DEPARTMENTS PRIOR TO A SITE PUNCH LIST INSPECTION AND ANY BOND RELEASE.
16. YORK COUNTY RECORDED DRAWINGS: APPLICANT MUST SUBMIT RECORDED COPIES OF YORK COUNTY REGISTRY OF DEEDS DRAWINGS TO PLANNING & ENGINEERING DEPARTMENT PRIOR TO BUILDING PERMIT ISSUANCE.
17. AS AGREED DURING THE PUBLIC HEARING PROCESS, THE UNIVERSITY OF NEW ENGLAND (UNE) SHALL BE RESPONSIBLE FOR THE REASONABLE COSTS, AS APPLICABLE, FOR THE RELOCATION OF ALL IMPACTED MOORINGS DISPLACED BY THE CONSTRUCTION OF THE UNE RESEARCH PIER.
18. FIRE DEPARTMENT REQUIREMENTS:
   A. THE APPLICANT SHALL SCHEDULE AN ON-SITE INSPECTION WITH THE BIDDEFORD FIRE CHIEF TO VERIFY THAT EMERGENCY VEHICLE TURNAROUND CAN ACCOMMODATE THE LARGEST VEHICLE IN THEIR FLEET TO THE DEPARTMENT'S SATISFACTION. ANY NECESSARY MODIFICATIONS SHALL BE COORDINATED WITH THE CITY PLANNER AND CONSTRUCTED TO THE FIRE CHIEF'S SATISFACTION.

CENTERLINE ALIGNMENT TABLE

SEGMENT ID	START	END	LENGTH (FEET)	CHORD LENGTH (FEET)	CURVE RADIUS (FEET)	DELTA ANGLE (DEGREES MIN SEC)
1	1+00	1+05.02	5.02			
2	1+09.02	1+47.32	38.30	38.28	341.83	6o6'13"
3	1+47.32	1+90.83	43.51	43.50	500.00	4o59'10"
4	1+90.83	2+99.52	108.69	108.39	400.00	15o34'3"
5	2+99.52	3+76.78	77.24	71.05	56.00	80o27'50"
6	3+76.78	5+88.66	211.88	209.42	400.00	30o21'3"
7	5+88.66	6+33.77	45.13	43.61	50.00	51o42'47"
8	6+33.77	6+66	36.23			

0 20 40
SCALE: FEET

ELEVATION	MEAN	NAVD88
BFE	+18.0	+14.0
MHT	+11.6	+8.6
spring	+9.7	+6.7
spring	+6.3	+3.3
MSL	+4.6	-0.3
MLW	+0.3	-4.7
MLLW	0.0	-5.0

*PROJECT DATUM

APPROVAL
CITY OF BIDDEFORD PLANNING BOARD
APPROVED BY: DATE 8-6-25

NOTES
1. THE PROPOSED ACCESS ROAD WILL NOT BE SUBMITTED IN THE FUTURE FOR PUBLIC ACCEPTANCE.
2. THE CITY WILL NOT BE RESPONSIBLE FOR ANY MAINTENANCE, REPAIR, PLOWING OR TRASH REMOVAL OF THE PROPOSED ACCESS ROAD

FOR PERMIT

Attention: If this scale bar does not measure 1" then drawing is not original scale

STATE OF MAINE — DANIEL E. BRIGGS — 8/7/2025

Designed	DJB
Drawn	JAM
Checked	BJB
Approved	BMM
ILE No	13033
GEI Project	2203703

GEI Consultants — GEI CONSULTANTS, INC, 5 MILK STREET, PORTLAND, ME 04101, (207) 797-8901

UNE — UNIVERSITY OF NEW ENGLAND — 11 HILLS BEACH RD, BIDDEFORD, MAINE

UNIVERSITY OF NEW ENGLAND MARINE SCIENCE CENTER PIER
11 HILLS BEACH ROAD
BIDDEFORD, YORK COUNTY, MAINE

NO	DATE	ISSUE/REVISION	APP
9	8/7/2025	FINAL PB APPROVAL	DJB
8	6/6/2025	ADDRESS PB COMMENTS	DJB
7	4/18/2025	BIDDEFORD PERMIT APP	DJB
6	9/17/2024	REVISED PERMIT SET	DJB
5	6/27/2024	REVISED PERMIT SET	DJB
4	9/14/2023	DEP PERMIT SET	DJB
3	6/28/2023	75% DESIGN SUBMISSION	DJB
2	2/15/2023	30% DESIGN SUBMISSION	DJB
1	12/8/2022	15% DESIGN SUB REV	DJB

SHEET NAME: SITE PLAN
SHEET NO: C-003

CITY OF BIDDEFORD

Planning and Development Department

David C.M. Galbraith
Deputy Director/City Planner
205 Main Street
P.O. Box 586
Biddeford, ME 04005
(207) 284-9115
David.Galbraith@biddefordmaine.org

PLANNING BOARD STAFF REPORT

TO: Chair Plotkin and Members of the Biddeford Planning Board

FROM: David C.M. Galbraith, Deputy Director/City Planner

DATE: May 13, 2025

RE: 2024.34 Sketch Plan – Site Plan and Shoreland Zoning Review for the University of New England (UNE) / Proposed Construction of a Marine Science Center Research Pier to be located at 11 Hills Beach Road (Map #52, Lot 4) located in the City's Institutional (IN) Zoning District.

MEETING DATE: May 21, 2025, at 6:00 PM

---

1. INTRODUCTION

Tom Saucier, PE of Site Design Associates, is representing the University of New England (UNE) who is applying for Sketch Site Plan Review within the Shoreland Zoning District. The University of New England (UNE) proposes to construct a new pier on the Saco River adjacent to the Girard Marine Science Center (GMSC) to support research and educational programming. The project has been in development for more than 10 years and has gone through extensive planning and alternatives analysis in arriving at the design that is being proposed.

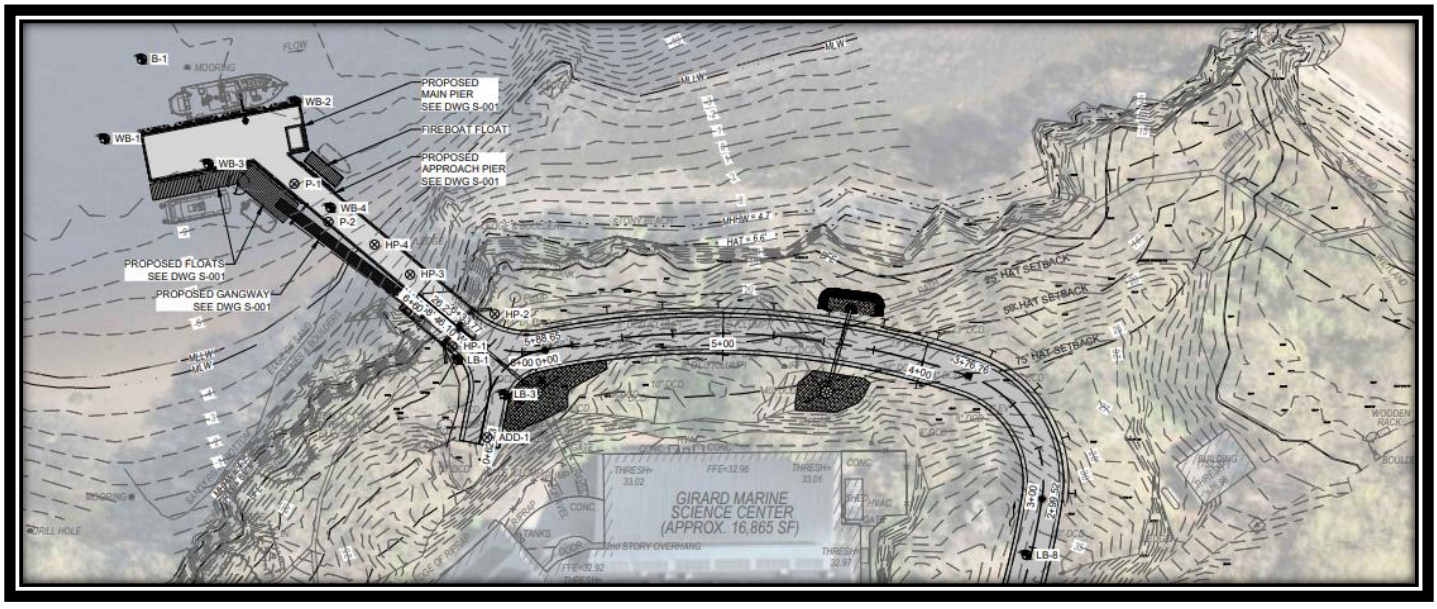

Proposed Marine Science Center Research Pier

RE: Case # 2024.34 Sketch Plan – Site Plan and Shoreland Zoning Review for the University of New England (UNE) / Proposed Construction of a Marine Science Center Research Pier to be located at 11 Hills Beach Road (Map #52, Lot 4) located in the City's Institutional (IN) Zoning District.

MEETING DATE: May 21, 2025, at 6:00 PM

It should be noted that the Planning Department received the formal application for this project on April 16, 2025. However, the case # that was assigned to this project was in 2024 (Case # 2024.34) as that is when the Planning Department started receiving comments from the public on this application, and we wanted to make certain that any and all correspondence related to this matter be saved within the public record.

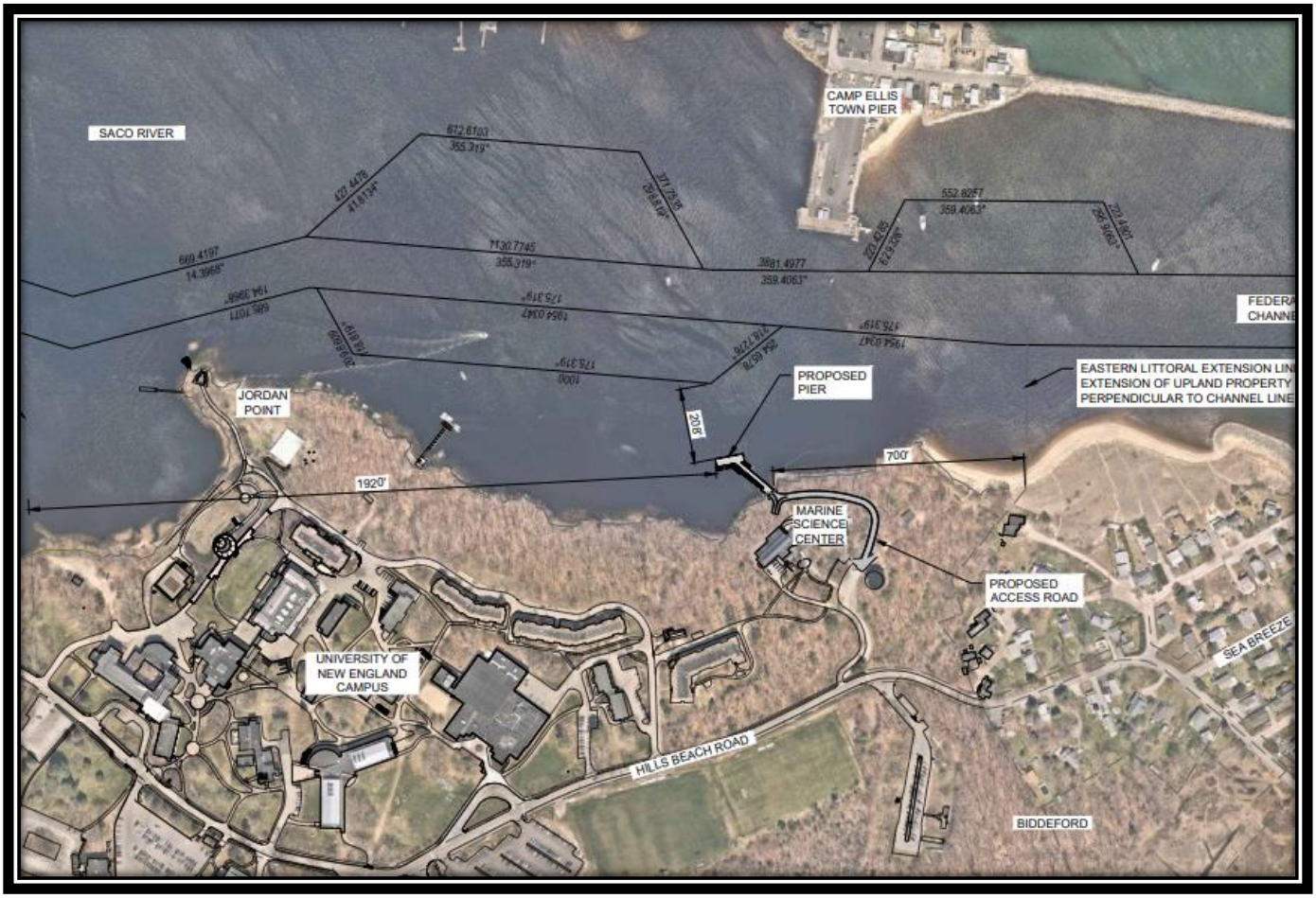

University of New England (UNE) – proposed Marine Science Center Research Pier

The University of New England (UNE) campus is located along the Saco River in Biddeford, ME. The Marine Science Center is located on the waterfront at the easterly end of campus approximately opposite Camp Ellis in Saco. To support MSC research activities, UNE proposes to construct a pier from the shore adjacent to the MSC into the Saco River to provide an all-tide access facility for small and shallow draft vessels (skiffs, landing craft, up to approximately 3-foot draft), with tidally-restricted access for larger vessels.

RE: Case # 2024.34 Sketch Plan – Site Plan and Shoreland Zoning Review for the University of New England (UNE) / Proposed Construction of a Marine Science Center Research Pier to be located at 11 Hills Beach Road (Map #52, Lot 4) located in the City's Institutional (IN) Zoning District.

MEETING DATE: May 21, 2025, at 6:00 PM

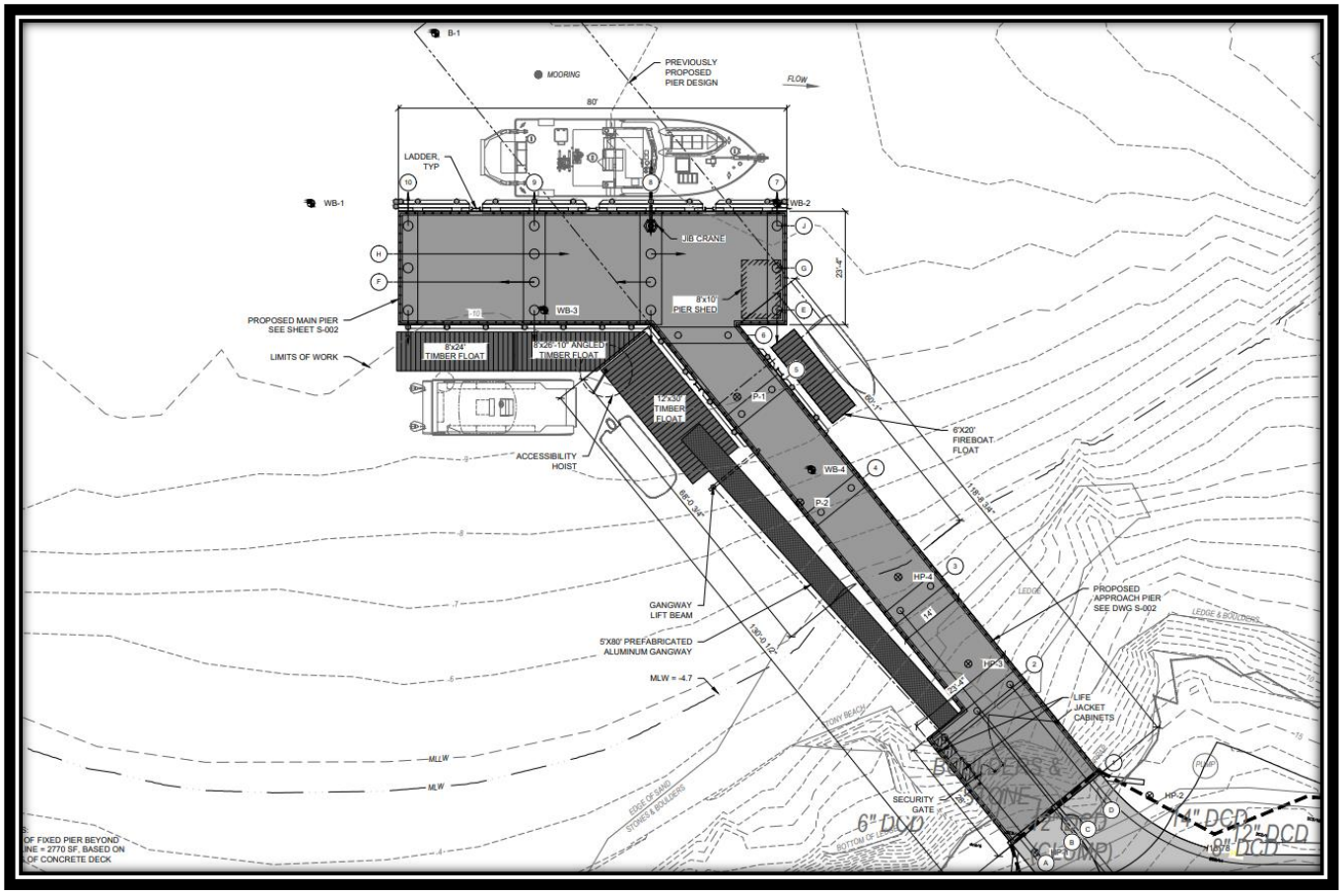

Marine Science Center Research Pier Detail

The proposed facility includes the following:

1. A pile supported pier structure extending from shore into the Saco River. The proposed pier includes an approximately 130-foot-long approach section extending from shore and an 80-foot-long pier head section oriented roughly parallel to the direction of flow in the river. The pier consists of a concrete superstructure on steel pipe piles, with timber fender piles for vessel berthing and floating docks, and a pile supported gangway lifting beam to allow the gangway ramp to be temporarily removed from the water. Site 7 (Preferred) Stormwater Management Report UNE Marine Science Center Pier September 2023, Revision B. April 2025 GEI Consultants, Inc.

2. A floating dock system consisting of one 8-foot by 24-foot float, one 8-foot by 26- foot 10-inch float, and one 12-foot by 30-foot gangway landing float to provide alltide vessel access for UNE's vessels on the west side of the pier, and a single 6-foot by 20-foot floating dock to provide a tie-up location for the City of Biddeford Fire Boat on the east side of the pier.

3. An 80-foot by 5-foot gangway, to provide ADA compliant access to the float system.

4. An upland access road connecting the existing road at the MSC to the proposed pier, including associated site grading, drainage, and stormwater management features.

These proposed improvements will result in a total increase in impervious area totaling 0.249 acres. The increase in impervious area will be managed by the two bioretention filter cells to the north of the Girard Marine Science Center. Runoff will be conveyed to the bioretention filter cells via proposed vegetated swales along the low side of the superelevated access road. The bioretention filter cells will slowly release captured stormwater via underground pipe into the Saco River/Atlantic Ocean.

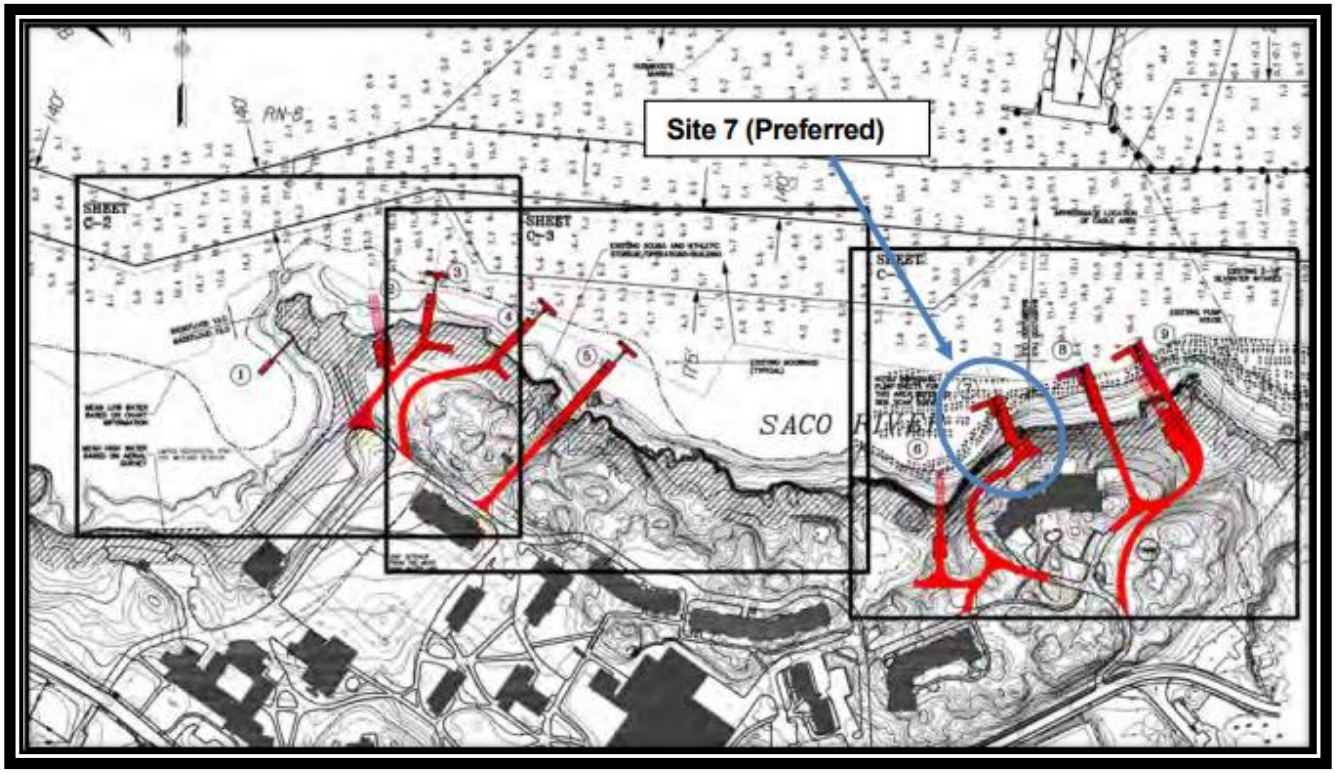

Fig. 1 – Alternative Sites Evaluated in 2008-2010 Study

As outlined in their project narrative, multiple locations for the pier were evaluated Alternative locations *"for more than 10 years and has gone through extensive planning and alternatives analysis in arriving at the design that is proposed"*.

The University's consultants (Daniel Bannon, P.E., CFM and Barney Baker, P.E. or GEI Consultants) concluded their alternate pier locations and concluded that:

> *"GEI has reviewed the concerns raised by the Saco and Biddeford Harbormasters and evaluated their impact on the proposed design, reviewed the history of planning that led to the current design location and layout, and reviewed the potential advantages and disadvantages offered by the suggested alternative pier location. While we respectfully value the input and suggestions for a layout alternative, it is our opinion that the proposed design represents the preferred balance of project requirements and site constraints. Compared to the suggested*

alternative, the proposed design achieves adequate water depth, provides safe navigation, results in a structure of smaller overall dimensions with less coastal wetland impact, does not appear to be subject to significant sediment deposition, and locates the pier in a location that is less exposed to current and icing impacts. For these reasons, GEI recommends that the current design and pier location be maintained".

After completing the pier feasibility study and identifying Site 7 as the preferred pier location, UNE undertook additional effort in 2015-2016 to study alternative pier layouts that would address the functional and vessel needs of the marine science curriculum as well as the site exposure, berthing conditions, access requirements, and associated site impacts. During this work, numerous alternative pier layouts were considered. Alternate locations evaluated water depth, exposure to currents, location relative to river sediment deposition, exposure to icing, and impacts to moorings.

2. PROJECT DATA/INFORMATION

1.	Applicant:	University of New England 11 Hills Beach Road Biddeford, ME
2.	Owner of Property:	University of New England 11 Hills Beach Road Biddeford, ME
3.	Agent:	Tom Saucier, P.E. Site Design Associates 23 Whitney Way Topsham, ME 04086
4.	Surveyor:	Tom Saucier, P.E. Site Design Associates 23 Whitney Way Topsham, ME 04086
5.	Project Location:	11 Hills Beach Road
6.	Project Tax Map #/Lot #:	Tax Map 52 Lot 4
7.	Lot Size:	49.9-acres
8.	Base Zoning:	Institutional (IN)
9.	Overlay Zoning:	Shoreland Zoning
10.	Existing Use:	Saco River
11.	Proposed Use:	Marine Research Pier
12.	Approvals Required:	Site Plan and Shoreland Review
13.	Uses in the Vicinity:	University
14.	Waivers Needed:	None at this time
18.	Waivers Granted:	N/A
22.	Other Non-City Permits Required:	N/A
23.	LDR Attachment A: Fees Paid:	Yes
25.	Planning Board Review History: Sketch Plan Review - May 21, 2025	

3. REVIEW PROCESS

RE: Case # 2024.34 Sketch Plan – Site Plan and Shoreland Zoning Review for the University of New England (UNE) / Proposed Construction of a Marine Science Center Research Pier to be located at 11 Hills Beach Road (Map #52, Lot 4) located in the City's Institutional (IN) Zoning District.

MEETING DATE: May 21, 2025, at 6:00 PM

Per City ordinance, this application is subject to Site Plan (Land Development Regulations, Article XI) review and Shoreland Zoning (approval by the Planning Board.

- Saco River Corridor Commission (SRCC) – Approval 9-13-2024 Attached pages # 282-287
- Department of Environmental Protection (MDEP), Findings of Fact (FOF) and Order Pages # 288-295, dated April 11, 2025.
- U.S. Army Corps of Engineers, New England District, dated March 28, 2025. Pages # 296-298
- Maine Historic Preservation Commission, Dated May 15, 2023.
- City of Biddeford letter from Former City Manager (James Bennett) regarding a "Notice to Proceed with External Reviews" / compliance with City Code 74-35, subsections (c) items 1-10, dated August 19, 2025, Pages #302-303.
- Not Received: Evidence that the following Native American tribes have been notified of the Applicant's intended project:
    - Aroostook Band of Micmac
    - Passamaquoddy Tribe of Indians: Pleasant Point; Indian Township
    - Houlton Band of Maliseet Indians
    - Penobscot Indian Nation

4. Departmental Review Comments:

A. Planning:

1) The Preliminary Application shall include copies of the required notification letters provided to the various Native American Tribes listed above in Section 3.

2) The application lists two (2) project waivers being sought. The application didn't include a narrative or rational for Staff or the Board to evaluate the requested waivers. This information shall be included in the Preliminary application package.

B. Code Enforcement:

1. No comments / concerns at this time.

C. Engineering / Public Works:

1. No comments at this time.

D. Police Department:

1. No comments / concerns at this time.

E. Fire Department:

1. No comments / concerns at this time.

F. Traffic Peer Review:

1. Not Applicable.

G. Engineering Peer Review:

1. No comments at this time.

5. STAFF REVIEW

APPLICATION COMPLETENESS: This Application is for a "Sketch Plan" review and in addition to Planning Board review and approval of the project, it also requires approval from:

A. **ZONING:**

The subject property is located within the City's Institutional (IN) zoning district where a university research dock is a permitted use.

B. **REVIEW STANDARDS:**

The major site details being proposed, such as the research dock, access roadway, and landscaped areas have been designed by the Applicant. The submitted application has been in the design process for approximately 10 years, so the "sketch plan" application is very detailed so the plan being reviewed the Board is what is proposed to be constructed on the property. Staff find that the application satisfies the City's Shoreland Zoning Ordinance and Site Plan criteria.

C. WAIVERS:

The Applicants are seeking two waivers, namely:

1) Article XI.II. Section 5.B.1.a.
"The rate of post-development runoff shall not exceed that of predevelopment. Details of catch basins, drainage pipes and retention/detention ponds shall be provided as needed with the application. All detail sheets shall bear the seal and signature of a professional engineer, licensed in the State of Maine".

2) Article XI.II. Section 5.B.1.e.3. (Slopes steeper than 2:1 in ledge)
"No slope shall be created which results in a slope of more than two feet horizontal to one foot vertical unless proper retaining walls are proposed".

The application lists the above as requested waivers, but the application didn't include rational for Staff or the Board to support the requested waivers. This information shall be included in the Preliminary application package.

6. SAMPLE MOTIONS:

The Application before the Board is a "Sketch Plan" so no formal vote is required. However, the Board should provide the Applicant with direction regarding any items that should be included in the formal Preliminary Application.

WRIGHT-PIERCE
Engineering a Better Environment

Memorandum

Date: **5/14/2025**

Project No.: **22061G**

To: **David Galbraith, City Planner**
Adi Iriqat, Assistant Planner

From: **Christine Rinehart, PE**
Nate Edwards, PE
Owen Chaplain, PE

Subject: **2024.34, UNE Research Pier, Shoreland and Site Plan Review**

As requested by the City of Biddeford, Wright-Pierce has reviewed the Shoreland Zoning and Site Plan Application for a proposed research pier and floats at the University of New England campus. The proposed pier is located at the confluence of the Saco River and Atlantic Ocean at 11 Beach Hill Road in Biddeford, Maine (Map 52, Lot 4) and is located in the Institutional (IN) zone and Limited Residential District of the Shoreland Zone. The proposed pier is pile-supported pier structure extending into the Saco River The pier consists of a concrete superstructure on steel pipe piles, with timber fender piles for vessel berthing and floating docks, and a pile supported gangway lifting beam to allow the gangway ramp to be temporarily removed from the water. A floating dock system is also proposed with a gangway to provide ADA compliant access. An upland access road to the pier is also proposed. Our review was limited to the access road connecting the existing road at Marine Science Center to the proposed pier, including site grading, drainage, and stormwater management features.

Documents Reviewed by Wright-Pierce

- Shoreland and Site Plan Application, Research Pier, 11 Hills Beach Road, City of Biddeford, Maine, prepared by Site Design Associates for University of New England, dated April 16, 2025.
- University of New England Marine Science Research Pier, 11 Hills Beach Road, Biddeford, Maine, Civil Plans, prepared by GEI Consultants, Inc., issued for permitting, dated April 16, 2025.
- General Permit Response Letter, prepared by U.S. Army Corps of Engineers, New England District, dated March 28, 2025.

Review Comments

Applicant should provide written responses to review comments recommending clarification or further information to be provided by the Applicant.

Staff Review Committee (SRC) Comments/City Coordination Items

1. The Fire Department has expressed that the length of the turnaround does not meet their needs of a 70-foot-long turnaround at the end of the access road. The provided turnaround is approximately 40 feet long.
2. Access road width has been increased to 20 feet, as requested by the Fire Department.
3. Additional coordination items for the City are indicated within the Review Comments below in red font.

Checklist

Limited information was provided by the Applicant on the checklist. Applicant should fully complete the checklist for the next submission, including column D (list drawing sheet number where information is provided) and column

E (reason not provided/comment). See comments on attached Site Plan & Subdivision Application Drawing Checklist. Note that comments in the checklist have not been included in the review comments below.

Code of Ordinances

Chapter 74 Waterways

1. Section 74-35 Construction of Wharf, Pier, or Landing Regulated states that new piers require permission from the Harbormaster.
2. Section 74-36 Floats requires permission from the Harbormaster for floats that are an integral part of a pier.

Land Development Regulations, Article VI Performance Standards

Section 26 Erosion Control

1. What erosion and sedimentation controls will be utilized for the construction of the pier abutment and pier? A turbidity curtain detail is included and assumed to be used for the pier but the location of this is not shown in plan view.
2. A stabilized construction entrance, silt fence, biodegradable stabilization matting, and plunge pool are proposed for the construction of the proposed access road.

Section 50 Preservation of Landscape/Natural Vegetation

1. A revegetation plan has been submitted showing tree, shrub, and perennial plantings within the shoreland zone and upland areas. The plan has been reviewed and approved by the Saco River Corridor Commission.

Section 61 Stormwater Management

1. The Inspection and Maintenance Plan of Stormwater Management Facilities includes a recertification requirement, which includes a five-year recertification to Maine DEP. This reference should be removed, since there is no DEP Stormwater permit.
2. See Land Development Regulations, Article XI Site Plan Revie, comments 1-5 below. A waiver of Section 61.A.1-2 will also be required.

Section 70 Wildlife Preservation

1. Subsection A. states that any project involving parcels of land of greater than five acres, or any portion of a larger parcel greater than five acres, shall be required to conduct a wildlife study by a certified wildlife biologist. This provision may be waived, if a letter from the Maine Department of Inland Fisheries and Wildlife (MDIFW) indicates there are no significant habitat areas involved in the project area or abutting adjacent land. The Maine DEP Natural Resource Protection Act (NRPA) permit states that “according to the Department s Geologic Information System (GIS) database there are no mapped Essential or Significant Wildlife Habitats at the site. The Maine Department of Inland Fisheries and Wildlife (MDIFW) reviewed the proposed project and stated that the project is located adjacent to but outside of Tidal Waterfowl and Wading Bird Habitat (TWWH), a designated significant wildlife habitat. MDIFW stated that minimal impacts to piping plover and Blanding’s turtle habitat are anticipated and provided general recommendations including minimizing vegetation removal and soil disturbance, and that time spent in the water should be minimized to the greatest extent practicable.” Given the supporting information in the NRPA permit, we believe this requirement is met.

Land Development Regulations, Article XI Site Plan Review

1. The applicant has requested a waiver of Article XI.II Section 5.B.1 to allow a small increase in peak stormwater runoff rates. The applicant has stated they are requesting this waiver since stormwater discharges directly to a

tidal receiving water and there will be no impact on a downgradient storm system. Since there's only a small increase in peak runoff rate and Chapter 500 does allow for a waiver of this requirement for sites discharging to coastal wetlands/rivers, we recommend granting this waiver.

2. Bioretention systems are proposed to provide stormwater treatment. 76% of the new impervious area and 72% of the new developed area are treated, which meets the Maine DEP General Standard water quality treatment requirements for linear developments.
3. The Grading and Drainage Plan and HydroCAD model refers to the stormwater treatment practices as Bioretention Filter Cells; however, the details for the stormwater practices refer to them as Grassed Underdrained Soil Filters. All notations should be updated to be consistent between plan, details, and model.
4. A detail should be included in the plans for the 3' diameter catch basin with beehive grate.
5. The 3' diameter catch basins are modeled with 18" horizontal orifices (beehive grates). The Grassed Underdrained Soil Filter detail and Granding and Drainage Plan show the beehive grate as the entire catch basin diameter. Please clarify what size the grate is and update the plans and model as needed
6. The applicant has requested a waiver of Article XI.II Section 5.B.1.e.3 to allow for slopes steeper than 2:1 because of ledge. 1:1 vegetated reinforced slopes are proposed where there is no ledge and 1:10 max slopes are proposed where there is ledge.
    a. Has the ledge cut been reviewed by a geotechnical engineer for stability?
    b. Additional information about the vegetated reinforced slopes is needed. A 1:1 slope is steep and difficult to vegetate, even with matting. The slope detail on C-013 shows horizontal lines into the slope that are not labeled. Are these additional stabilization measures?
    c. Article XIV, 15.H.4 also prohibits road and driveway banks to be steeper than 2:1, and a waiver would be needed based on the proposed slopes.
7. North arrow provided on C-006 is incorrect and should be reoriented.
8. Proposed spot grades along access road do not match proposed contours or vertical profile. For example, see Sta. 4+00. All proposed elevations should correlate between plan view, profile view, cross sections.
9. The Typical Section provided on sheet C-008 shows the 1:1 embankment starting behind the proposed guardrail. However, Plan View (C-006/007) shows the 1:1 embankment starting in front of the guardrail. The typical section and plan view should correlate. Additionally, an adequate guardrail "shelf" should be provided behind the guardrail posts for support.
10. Vertical curve data is only partially shown in the access road profile (C-006/007). Adjust viewports so all data is legible.
11. Proposed pipes missing from access road profile (C-006/007) and storm drain callouts/leader lines pointing to incorrect location. Clarify where storm drain pipes are in profile.

Land Development Regulations, Article XII Floodplain Management Ordinance

1. Applicant should provide comments about how the pier and shed comply with Article XII Floodplain Management Ordinance requirements and specifically Section R, Coastal Floodplains. Please be sure to include how pier, shed, and utility elevation were selected and if sea level rise was considered.

Land Development Regulations, Article XIV Shoreland Zoning Ordinance

1. Article XIV, 15.H.1 requires roads and driveways within the shoreland zone to be set back at least 100 feet, horizontal distance, from the normal high-water line of a great pond classified GPA or a river that flows to a great pond classified GPA, and 75 feet, horizontal distance, from the normal high-water line of other water bodies, tributary steams, or the upland edge of a wetland unless no reasonable alternative exists as determined by the Planning Board. However, Section 15.H.1 does not apply to roads or driveways that provide access to

permitted structures and facilities located nearer to the shoreline due to operational necessity. Since the pier is a permanent structure with operational necessity to the shoreline and the access road is providing access to the pier, we believe the proposed access road is allowed by the Ordinance.

2. The pier is proposed in the Institutional (IN) zone and Limited Residential (LR) shoreland zoning overlay district. An 8'x10' shed is also proposed on the pier to store life jackets, tools, and research equipment and is stated to be an operational necessity. Although the Shoreland Zoning Ordinance does not allow structures within 75' of the normal high-water line in the Limited Residential overlay district, the setbacks do not apply to structures that are an operational necessity for direct water access. Based on the information provided, we believe the proposed structure is allowed by the Ordinance.
3. The cover letter for the application indicates the plan was reviewed by the National Marine Fisheries Service. Have review comments from the National Marine Fisheries Service been provided to the City?

Additional Comments

1. A submerged lands lease or easement is required for structures, such as piers, located on publicly-owned submerged lands. Has a submerged lands lease or easement been secured for the project through the Maine Department of Agriculture, Conservation & Forestry, Bureau of Parks and Lands?

CITY OF BIDDEFORD - SITE PLAN & SUBDIVISION APPLICATION DRAWING CHECKLIST *LAST REVISED: 11/26/2024*

CHECKLIST DIRECTIONS:

1. The following checklist must be completely filled out by the applicant and included on all preliminary and final Site Plan & Subdivision submittals. No checklist is required for sketch submittals.
2. Applicant to confirm all of the items listed are included within the submittal. Any missing items must have adequate reasoning to justify their absence.
3. City to review applicant's submittal and checklist responses. Projects missing substantial submittal information with non-acceptable reasoning will be rejected and required to resubmit.
4. Items in **BLACK** are required for 'Preliminary' approval & 'Final' approval.
5. Items in **BLUE** are only required for 'Final' approval.

SUBMITTAL INFORMATION - TO BE FILLED OUT BY APPLICANT	
Project Name:	University of New England - Research Pier
Planning Board # (if available):	
Applicant Name/Info:	University of New England
Submittal #/Type (Prelim/Final):	Preliminary/Final
Submittal Date:	15-Apr-25

SUBMITTAL REQUIREMENT		APPLICANT RESPONSE			CITY REVIEW RESPONSE	
ITEM NUMBER	DESCRIPTION	INFORMATION PROVIDED (YES/NO)	LIST DRAWING SHEET NUMBER WHERE INFORMATION IS PROVIDED	REASON NOT PROVIDED/COMMENT	ACCEPTABLE (YES/NO-REVISE & RESUBMIT)	COMMENT
1	**GENERAL PLAN REQUIREMENTS**	YES				
A	Drawing specific legends (linetypes, hatches, etc.)	YES				
B	Individual drawing layer control should be utilized: freeze/thawing, changing lineweights, and screening (i.e. screen existing layers on a proposed plan, freeze topography and underground utilities on a proposed site plan)	YES				
C	North arrows, standard engineering scale viewports, scale bars, dated revision blocks	YES				
D	All drawings and surveys must be in the following coordinate systems: NAD83 Maine State Plane West (Horizontal) and NAVD88 (Vertical)	YES				
E	Drawings need to be designed, signed & sealed by a Maine licensed professional engineer (PE); all boundary survey data needs to be performed by a licensed professional land surveyor (PLS)	YES				
2	**COVER SHEET**	YES				
A	Project Name & Property Address	YES				
B	Project Team Contact Information (Owner, Engineer, Contractor, etc.)	YES				
C	Site Location Map	YES				
D	Sheet Set List of Drawings	YES				
E	Tax Map and Lot ID	YES				
F	Zoning & Shoreland Zone Information	YES				
G	Existing Use Description	YES				
H	Proposed Use Description	YES				
I	Required Waiver/Variances (Yes/No); if yes, plan must clearly list waivers/variances requesting	YES				
J	Name of Drainage Watershed	YES				
K	Within the MS4 Urbanized Area (Yes/No)	YES				
L	Natural resources (streams, wetlands, etc.) located on-site or adjacent to the property (Yes/No)	YES				
M	Within the 100-year Flood Zone (Yes/No)	YES				
N	Public Road Proposed (Yes/No)	NO				
O	Private Road Proposed (Yes/No)	YES				
P	Public Sewer Connection (Yes/No)	YES	EXISTING			
Q	Public Storm Drain Connection (Yes/No)	NO				
R	Limits of Disturbance in square feet and acres	YES				
S	Pervious Land Cover square footage, existing and proposed	YES				
T	Impervious Land Cover square footage (Pavement/Gravel), existing and proposed	YES				
U	Building Roof square footage, existing and proposed	YES				
V	Assigned Planning Board Number	N/A				
W	Estimated cut/fill earthwork volumes. If disturbing within the Flood Zone, a separate set of earthwork volumes required (overall site vs. within flood zone)	YES				
3	**EXISTING CONDITIONS PLAN**	YES				
A	Horizontal & Vertical Datums annotated (NAD83 & NAVD88)	YES				
B	Property & Right-of-Way Lines	YES				
C	Boundary line information (bearings, distances, etc.)	YES				
D	Property pin and monumentation locations	YES				
E	Existing easements with proper ownership identified	YES				
F	Road Names & Individual Lot Labels (Map, Lot, Owner, Acreage)	YES				
G	Location of any Natural Resources and their respective buffers (wetlands, streams, etc.)	YES				
H	100-year Flood Zone Limits & Elevation	YES				
I	Existing contours with adequate contour labelling; minimum 1' contour interval	YES				
J	Existing building FFEs annotated	YES				
K	Spot elevations for all tie-in locations (curb cuts, property line)	YES				
L	Existing buildings & structures	YES				
M	Existing pavement areas & number of parking spaces	YES				
N	Existing ADA ramp geometry, detectable warning plates, and ADA parking spaces	YES				
O	Existing site features (sidewalks, retaining walls, curbing, lightpoles, guide rails, dumpsters, fencing)	YES				
P	Existing signage and striping	YES				
Q	Existing underground utility locations (storm, sewer, force main, water, gas, elec, tele)	YES				
R	Existing above-ground utility locations (manholes, catch basins, utility poles, hydrants, transformers, riprap)	YES				
S	Rim, invert in, invert out, pipe size, cardinal direction (N, E, S, W) information for any existing utility infrastructure being tied into (upstream/downstream/outfalls)	YES				

T	Existing tree lines, street trees, free-standing trees (12” or larger diameter at breast height), and vegetation	YES				
U	Location of any borings, drinking wells, and monitoring wells	YES				
4	**SITE DEMOLITION & EROSION CONTROL (E&SC) PLAN**	YES				
A	Limits-of-disturbance outlined and acreage annotated	YES				
B	Location of any Natural Resources and their respective buffers (wetlands, streams, etc.)	YES				
C	100-year Flood Zone Limits	YES				
D	Callout existing site features to be demolished/removed/replaced	YES				
E	Callout existing utilities to be demolished/removed/abandoned-in-place	YES				
F	Hatch existing buildings and pavement to be removed	YES				
G	Construction Entrance location(s)	YES				
H	Perimeter E&SC control location(s) (i.e. silt fence, erosion berm mix)	YES				
I	Stockpile and staging area(s) identified (with proper perimeter control)	YES				
J	Inlet protection location(s)	YES				
K	Note requiring contractor to implement dust control measures throughout construction	YES				
L	Note requiring contractor to pave utility trenches within right-of-way within 3 days of excavation or prior to any rain event	N/A				
M	If groundwater expected, show dewatering/silt bag location(s); show temporary pumping routing	NO				
N	If large development is proposed with an extensive underground stormwater conveyance network, identify how SWM infrastructure and BMPs will be protected during construction and if sediment traps/basins are needed	N/A				
5	**SITE PLAN/SUBDIVISION PLAN**	YES				
A	Partial Site Plans needed for any viewport scale greater than 1”=20’	YES				
B	Existing property and right-of-way lines	YES				
C	Proposed subdivision lot lines and labels	YES				
D	Required Zoning Setbacks shown with dimensions and annotation	YES				
E	Bulk requirement summary table (zoning/parking calculations)	YES				
F	Location of any Natural Resources and their respective buffers (wetlands, streams, etc.)	YES				
G	100-year Flood Zone Limits	YES				
H	Proposed building outlines, door entrances and loading docks	YES				
I	Proposed building labels	YES				
J	Proposed road & sidewalk extents; provide clear annotation if roads will be public or private	YES				
K	Proposed parking and accessible parking locations; annotate parking space counts	YES				
L	Proposed signage, parking striping, and traffic striping	YES				
M	Detailed ADA ramp geometry, detectable warning surfaces, and ADA parking striping/signage; existing & proposed	YES				
N	Proposed site features (i.e. curbing, walls, fencing, guiderail, fire hydrant, transformers, light pole locations)	YES				
O	Proposed landscaping; detailed landscaping design should be shown on separate plans	YES				
P	Designated snow storage areas	YES				
Q	Proposed dumpster locations and trash removal access	YES				
R	Linear dimensions of all drive aisles, sidewalk widths, parking spaces, loading docks	YES				
S	Radial dimensions for all curbs, landscaped islands, sidewalks	YES				
T	Public/private road centerline stationing shown, labelled every 0+50’ with curve data	YES				
U	If Private Road is proposed, final recorded plans must clearly note that proposed private roads will not be submitted in the future for public acceptance	YES				
V	If Private Road is proposed, final recorded plans must clearly note that the City is not responsible for any maintenance, repair, plowing, or trash removal of proposed private roads	YES				
W	Planning Board signature block for final recording	YES				
6	**GRADING PLAN**	YES				
A	Partial Grading Plans needed for any viewport greater than 1”=20’	YES				
B	Limits-of-disturbance outlined and acreage annotated	YES				
C	Proposed Building Labels with Individual Finished Floor Elevations (FFEs)	YES				
D	Existing contours with adequate contour labelling, screened; minimum 1’ contour interval	YES				
E	Proposed contours with adequate contour labelling; minimum 1’ contour interval	YES				
F	Detailed grading for all ditches, swales, outfalls, and riprap	YES				
G	All proposed contours tie-into existing contours at limits-of-disturbance outline	YES				
H	Existing spot elevations for all asphalt, curb, and SWM BMP tie-in locations	YES				
I	Location of any Natural Resources and their respective buffers (wetlands, streams, etc.)	YES				
J	100-year Flood Zone Limits	YES				
K	Proposed spot elevations for all important roadway geometric points (including but not limited to: parking/drive aisles, building corners/entrances, retaining walls, loading docks, EOP/curblines)	YES				
L	Proposed spot elevations for all ADA ramp/landing/parking stall geometry points	N/A	No new ADA proposed			
M	Proposed % slope arrows for all ADA parking spaces and sidewalks	N/A	No new parking proposed			
N	Proposed longitudinal % slope arrows for drainage ditch centerlines	YES				
O	Proposed % slope arrows for roads, parking areas, and landscape tie-in areas	YES				
P	Estimated cut/fill earthwork volumes. If disturbing within the Flood Zone, a separate set of earthwork volumes required (overall site vs. within flood zone)	YES				
7	**ROAD PROFILES (if public/private road proposed)**	YES				
A	Existing surface; dashed and screened	YES				
B	Proposed surface; continuous and bold	YES				

C	Road design speed must be clearly identified	YES				
D	Corresponding centerline stationing and curve data annotation	YES				
E	All vertical curves must identify the proposed 'K' values and confirm they meet the minimum design speed thresholds listed in AASHTO's Green Book Tables 3-35 & 3-37	YES				
F	Clear annotation if proposed road will be public or private	YES				
G	If Private Road is proposed, plans must clearly note that proposed private roads will not be submitted in the future for public acceptance	YES				
H	If Private Road is proposed, plans must clearly note that the City is not responsible for any maintenance, repair, plowing, or trash removal of proposed private roads	YES				
8	**UTILITY PLAN**					
A	Existing underground utility locations; screened (storm, sewer, force main, water, gas, electric, telecom)	YES				
B	Existing above-ground utility locations; screened (manholes, catch basins, utility poles, hydrants, riprap)	YES				
C	Rim, invert in, invert out, pipe size, cardinal direction (N, E, S, W) information for any existing utility infrastructure being tied into (upstream/downstream/outfalls)	YES				
D	Proposed underground utility locations; bold (storm, sewer, force main, water, gas, electric, telecom, lighting)	YES				
E	Proposed above-ground utility locations; bold (manholes, catch basins, utility poles, hydrants, transformers, riprap)	YES				
F	Proposed storm culverts, outfalls, and riprap locations and sizes	YES				
G	Storm/sewer structure labels must include: rim, inverts in, inverts out, pipe sizes, cardinal directions (N, E, S, W)	YES				
H	Storm/sewer pipe labels must include: linear footage, pipe size, material, slope	YES				
I	Flow directional arrows for storm & sewer pipes	NO	Flow direction can be determined by analyzing inverts			
J	Proposed & existing site features shown that could conflict with proposed utilities (trees, signs, lightpoles, bollards, foundations, guiderails)	YES				
K	All storm drains must be sized to convey the 25-year storm	YES				
L	Sewer force main sizes and invert elevations	NO	No Force main proposed			
M	Sewer pump station locations, model, rim, inverts, pipe sizes, cardinal directions (N,E,S,W); additional details and hydraulic calculations required for any Public pump station proposed.	NO	No pump stations proposed			
N	Locations, sizes, and elevations of any: grease traps, oil-water separators, septic systems, drinking wells	NO	None proposed			
O	Proposed water sizes labelled	NO	None proposed			
9	**UTILITY PROFILES**					
A	Utility profiles required for **all** gravity storm drain and sewer pipes proposed: within the right-of-way, within private or public roads, for non-driveway culverts, and for any public infrastructure tie-ins	NO				
B	Existing surface; dashed and screened	NO				
C	Proposed surface; continuous and bold	NO				
D	Storm/sewer structure labels must include: rim, inverts in, inverts out, pipe sizes, cardinal directions (N, E, S, W)	NO				
E	Storm/sewer pipe labels must include: linear footage, pipe size, material, slope	YES				
F	Existing and proposed gravity pipe crossings shown; sizes labelled and depths/clearance annotated	YES	No pipe crossings proposed			
G	Existing and proposed electric/water/telecom/gas crossings shown at approximate depths; sizes labelled and depths/clearance annotated	YES	None proposed			
10	**DETAILS**					
A	Road section detail, including pavement/gravel depths & cross slopes	YES				
B	Sidewalk, paver, crosswalk, and any other pavement section details	N/A	None proposed			
C	Pavement sawcut & shiplap details	YES				
D	Utility trench/backfill detail	YES				
E	All site feature details; curbing, retaining walls, fencing, guiderails, dumpsters, etc.	YES				
F	Signage, striping, and ADA details	N/A	None proposed			
G	E&S notes and details	YES				
H	Utility structure details (manholes, cleanouts, fittings, handholes, transformer pads, hydrants)	YES				
I	Storm outfall & riprap details	YES				
J	Drainage ditch cross section identifying minimum depth, minimum bed width, and maximum side slopes	NO				
K	Pump station, grease trap, oil-water separator, septic, drinking well details	N/A	None proposed			
L	Conduit section details	N/A	None proposed			
11	**LANDSCAPING, LIGHTING & PHOTOMETRIC PLANS**					
A	As required by ordinance; at a minimum: locations, counts, lighting models, and landscaping species must be identified	YES	Revegetation plan provided			
B	Landscaping & lighting details	YES	Revegetation plan provided			
12	**DOCUMENTS/REPORTS/CALCULATIONS**					

A	On initial preliminary submittal applications, applicant must submit a development review and inspection fee. Applicant to coordinate fee amount with City Planner prior to submittal. This fee will be drawn against to cover the following type of services throughout the project life cycle (and may require replenishing): i. 3rd Party City Peer-Review ii. Site Inspections during the permitting process iii. Erosion & Sediment Control Inspections during construction iv. Right-of-Way Inspections during construction v. Site Punchlist/As-Built Inspections post-construction	To be determined				
B	Stormwater Management Report, including: 1. Predevelopment & Post-development Drainage Area Maps, including: a. Subdrainage areas delineated and labeled b. Points of Interest/Analysis shown and labeled c. Hatching for different land cover areas (impervious, pervious, gravel) within each applicable USDA soil boundary d. Time of concentration (Tc) paths & durations e. Four City-standardized stormwater summary tables 2. If any SWM water quality BMP or detention facility is proposed, hydrologic model exports/hydrographs must be submitted for the for the 2, 10, 25, & 100-year storm frequencies 3. Sizing calculations for any SWM water quality BMP or detention facility 4. A stormwater maintenance manual for any proposed SWM water quality BMP or detention facility, including: a. Annual maintenance requirements b. Annual inspection requirements by a licensed PE; noting that all inspection reports/logs need to be submitted to the Engineering Department by March 1st each following year, identifying what on-going maintenance has occurred and what remedial repairs are needed c. Signed Property Owner Agreement: including the current property owner's contact information and signature; it must be noted that all stormwater BMP maintenance requirements are linked to the property for perpetuity and transfer to any new ownership	Yes				
C	An approved 'Sewer Ability-to-Serve Letter' from the Engineering Department: i. Applicant to submit proposed sewer flow calculations per Maine's Subsurface Wastewater Disposal Rules, Chapter 241, Section 4 (Tables 4A & 4C)	N/A	No new buildings/sewer conveyance proposed			
D	A Performance Guarantee Cost Estimate utilizing Planning's template	YES				
E	For any Site Location of Development (SLODA) project, the applicant's submittal must mimic a formal submittal to DEP. Submit must abide to DEP's SLODA application and include DEP's SLODA Submittal Checklist (Form D)	N/A				
F	25-year hydraulic calculations for all storm conveyance infrastructure (pipes, culverts, drainage ditches); starting tailwater conditions/documentation must be clearly identified	YES				
K	Public sewer pump station sizing calculations and maintenance plan	N/A	No pump stations proposed			
M	Grease trap sizing calculations	N/A	No grease traps proposed			
N	Homeowner Association (HOA) agreement for any private road serving two (2) lots or more	N/A	No HOA			
O	Summary list & copy of any required DOT/DEP/USACE permits & approvals	YES				

CITY OF BIDDEFORD, MAINE

SHORELAND AND SITE PLAN REVIEW APPLICATION

Project:
RESEARCH PIER

Applicant:

UNIVERSITY OF NEW ENGLAND
11 HILLS BEACH ROAD
BIDDEFORD, MAINE 04005

April 16, 2025

Prepared by:

Site Design Associates
23 Whitney Way
Topsham, Maine 04086
Ph: 207-449-4275
Email: info@sitedesignassociates.biz

Site Design Associates
Consulting Engineering and Land Planning

April 16, 2025

David Galbraith, City Planner
City of Biddeford
P.O. Box 586
205 Main Street
Biddeford, ME 04005

RE: University of New England
Proposed Research Pier

Dear David and Planning Board Members:

University of New England is pleased to submit the enclosed application for site plan review and shoreland permits for a proposed research pier and floats at 11 Hills Beach Road in Biddeford. Enclosed are 10 copies of the site plan, and the following information submitted electronically per the direction from your office:

- City Application
- Letter of Agent Authorization
- Site Plan Drawing Checklist
- Location Map
- Deed
- Letter of Financial Capacity
- Stormwater Management Report
- Alternatives Analysis and Memo
- ACOE, DEP, and SRCC Permits
- Letter from the Maine Historic Preservation Commission clearing the project
- Notice to Proceed with external reviews from the city
- Typical shed photo
- Light fixture cuts
- Drawing Set

We understand the planning office will calculate the application fee after the application is submitted.

The project is located in the city Institutional (IN) zone and the Limited Residential District shoreland zone. The project was included on the most recent version of the city approved campus master plan.

The Biddeford Campus of the University of New England (UNE), Maine's largest private university, is positioned on the confluence of the Saco River and the Atlantic Ocean. This location, along with state-of-the-art research facilities and world-class faculty, has recently earned UNE's marine programs rankings among the top 10 nationally from *Biology Explorer*, *College Choice*, and *College Magazine*. To expand UNE's unique

experiential learning and research opportunities in the marine ecosphere, the University is proposing the construction of a permanent pier which will serve as a four-season research deployment facility directly adjacent to the Arthur P. Girard Marine Science Center (GMSC) on its Biddeford campus

UNE's School of Marine and Environmental Programs, housed in the GMSC, is the academic home of 325 undergraduate and graduate students who are studying marine science, marine policy and management, as well as a wide variety of interdisciplinary fields, including marine ecosystems, conservation, restoration, business, sustainable fisheries and ecological aquaculture, social-ecological systems, and marine sustainability science. Additionally, two programs provide pathways from undergraduate to graduate degrees in Marine Sciences and Maritime Law (a 3+3 partnership with Maine Law).

Three things distinguish UNE's marine programs. The first is the oceanfront location on its core undergraduate campus, which provides direct access to the Gulf of Maine. The second is the multitude of research opportunities available to students starting as early as their first year of undergraduate studies. And the third is how the marine research done by UNE students and faculty directly impacts the people of Maine and beyond.

However, all three of these key assets are limited by the lack of year-round access to the ocean. ***The planned pier will allow students and faculty to be on the water throughout the year, thereby greatly enhancing UNE's groundbreaking research into critical problems facing Maine.***

The jewel of UNE's marine programs is Ram Island, UNE's private one-acre living laboratory two miles from campus in Saco Bay, which was gifted to the University in 2014. The island, which houses a fieldwork station and an experimental kelp farm, provides unparalleled research and field study opportunities for students and faculty. It also creates the potential to develop research partnerships that focus on critical issues facing Maine, making Ram Island home to coastal zone investigations of climate change, marine geology, invasive species, marine mammal ecology and interactions with fisheries and marine aquaculture.

Despite its prime location with direct access to the ocean, UNE currently has floating docks that are removed seasonally, precluding access to Ram Island and other areas of the Gulf of Maine in the critical winter and spring months. Construction of a permanent pier at UNE's Girard Marine Science Center will allow for dynamic, year-round, ocean-going research activities, facilitating scientific and practical exchanges with local, regional, and national marine researchers and industry partners. Additionally, the deep-water access would expand UNE's ability to serve as a collaboration hub for coastal marine and deep-water science and industry. As good stewards of the environment and our coastal neighbors, UNE is committed to ensuring that the planned structure fully adheres to local, state, and federal regulations.

Investment in UNE's marine programs is good for Maine taxpayers. With the Gulf of Maine warming faster than almost any other body of water on the planet, marine research

afforded by year-round access to the water will allow UNE to gather critical data to guide Maine's response to climate change. These expanded research opportunities will likewise enhance UNE's ability to ensure that its students graduate with the curiosity and experience to both ask and answer the important questions that will inform to the data-driven decisions impacting the expanding fields of aquaculture, fisheries, marine law and policy, marine business and entrepreneurship, ocean food systems, and related fields.

In order to determine the optimum location for the pier, an extensive alternatives analysis and studies were undertaken. This was not only for due diligence, but was required by the state and federal regulators. The regulators concluded that this exhaustive analysis was satisfactory to establish the proposed pier location. A copy of the alternatives analysis is included as Attachment 8.

The proposed facility includes the following:

1. A pile supported pier structure extending from shore into the Saco River. The proposed pier includes an approximately 130-foot long approach section extending from shore and an 80-foot long pier head section oriented roughly parallel to the direction of flow in the river. The pier consists of a concrete superstructure on steel pipe piles, with timber fender piles for vessel berthing and floating docks, and a pile supported gangway lifting beam to allow the gangway ramp to be temporarily removed from the water.
2. A floating dock system consisting of one 8-foot by 24-foot float, one 8-foot by 26-foot 10-inch float, and one 12-foot by 30-foot gangway landing float to provide all-tide vessel access for UNE's vessels on the west side of the pier, and a single 6-foot by 20-foot floating dock to provide a tie-up location for the City of Biddeford Fire Boat on the east side of the pier.
3. An 80-foot by 5-foot gangway to provide ADA compliant access to the float system.
4. An upland access road connecting the existing road at the MSC to the proposed pier, including associated site grading, drainage, and stormwater management features.

The proposed activities are described in detail in the following sections.

Pier Structure

The proposed vehicle rated pier is supported by twenty-five concrete filled steel pipe piles and a concrete abutment which connects the pier to the proposed access road. All of the piles are located beyond the Highest Annual Tide (HAT) line, while the abutment is located shoreward of the HAT line. Fourteen, 24-inch diameter steel piles support the pier head portion of the structure and eleven, 16-inch diameter steel piles support the pier approach. The seven piles at the first three pile bents at the pier approach will be socketed to ledge due to a limited soil layer above the ledge surface at these locations. The remaining piles will be driven to ledge but do not require socketing given the sufficient

depth of overburden soils. The piles support precast concrete pile caps which support precast concrete deck planks that form the pier deck surface.

The pier includes thirty, 12-inch diameter timber fender piles to provide for vessel berthing at the main face of the pier and to restrain the floating dock system. All new fender piles will be untreated timber, greenheart species. A gangway lifting beam is proposed to lift the gangway out of the water during float maintenance or in advance of severe weather. The lifting beam is supported by a steel column anchored to the pier on one side and a 10.75-inch diameter concrete filled steel pipe pile on the other.

Floating Dock System

The proposed floating dock system includes four floating docks. The three timber floats on the west side of the pier are new, while the single float on the east side of the pier is an existing float that will be relocated from UNE's facility that is located upstream of the proposed pier (note that this facility is proposed to be demolished). The new floats consist of an 8-foot by 24-foot float, an 8-foot by 26-foot 10-inch angled float, and a 12-foot by 30-foot gangway landing float. All new floats will be located on the west side of the pier approach at the south side of the pier head. The existing float is 6-feet by 20-feet and will be located on the east side of the pier approach at the south side of the pier head to provide a tie-up location for the City of Biddeford Fire Boat. The new floats are accessed by the proposed gangway or a fixed ladder, and the fireboat float is accessed solely by a fixed ladder. All the floating docks are located beyond the MLLW line and will be restrained and guided by the timber fender piles. The floats will allow vessels to tie up to the pier at any time during the tide cycle. The depths of water at the floats are adequate to meet UNE's needs.

Gangway

The 80-foot by 5-foot gangway provides ADA compliant access to the new floating dock system on the west side of the pier. The gangway connects to the pier near the beginning of the pier approach and lands on the 12-foot by 30-foot floating dock. The total indirect impact from the gangway is 357 square feet (this area excludes the portion of the gangway located above the floating dock).

Pier Building

One pier building, an 8 ft x 10 ft shed, is proposed to be located at the southeast corner of the pier head. This structure will provide storage for small equipment used by MSC staff, as well as an indoor protected location to house certain utility features such as electrical service panels.

Access Drive

Vehicular and pedestrian access to the pier will be provided by a new 20 ft wide access road that will extend from the existing GMSC access road and parking area, around the east side of the GMSC building, and to the end of the pier approach. A turnaround area is

provided adjacent to the pier approach to allow for vehicles up to and including fire trucks accessing the pier to turn around and drive forward to exit the access road. There is no parking proposed adjacent to the pier. All vehicles will use the existing parking spaces adjacent to the GMSC building. The new road will provide construction access for the project, which will help to limit the amount of work performed from the water and allow more staging to be achieved from land. The upland work will include stormwater management features that have been designed to meet Maine DEP Chapter 500 standards.

The following addresses Site Plan Approval/ Site Design Criteria and Shoreland Zoning Land Use standards for piers.

Site Plan Approval/Site Design Criteria

1. **Drainage**

   A Stormwater Management Report is attached. The report submitted demonstrates compliance with Maine Department of Environmental Protection (DEP) Basic and General standards. The project will include bioretention filters designed to DEP BMP standards for enhancement of stormwater runoff quality.

   A waiver of Article XI.II.Section 5.B.1. is required for an increase in the rate of runoff. This waiver has historically been granted by the planning board for projects located on the UNE parcel that are directly tributary to tidal receiving waters, which will be the case for this project. There will be no impact on the capacity of a receiving downgradient storm system. The bioretention filters will provide stormwater quality enhancement and cooling of runoff, as well as a level of stormwater detention. Level spreaders will be utilized to evenly distribute runoff from the bioretention filters into sheet flow. Although an increase in the rate of runoff is shown at two point locations on the drainage plans, the reality is that the stormwater runoff from the subcatchments is distributed over a wide area.

2. **Utilities**

   Power will be fed underground to the pier from the Girard Marine Science Center.

3. **Parking**

   There will be no formal dedicated parking associated with the project.

4. **Structural Layout and Design**

   a) Design of Buildings

   An 8 ft x 10 ft shed is proposed on the pier. A photo in attachment 12 shows a rendering of the shed; a wood frame structure, with weather resistant siding, and a metal roof.

b) Setbacks

The research pier is sited in conformance with all setback requirements.

c) Fire Protection & Safety

Based on input from the fire department, the road width was increased to 20 ft per NFPA standards. The turnaround meets the city required dimensional standards and has been modelled to accommodate fire apparatus.

d) Landscaping

The revegetation plan has been developed to meet the City of Biddeford's Shoreland Zoning requirements as well as to preserve a visual buffer for the access drive to minimize visibility from the water to the greatest extent possible, while achieving the required clearing and considering functional requirements such as snow plowing at the turnaround. The revegetation plan also meets requirements of the Saco River Corridor Commission (SRCC) who has issued a permit for the project.

Revegetation Plan

The revegetation plan, drawing C-15, is intended to meet the city of Biddeford's shoreland zoning requirements. Details are as follows:

- 49 trees are being removed with 21 of those within the 50-foot HAT setback
- Approximately 5,850 SF of understory duff later and low growth vegetation (predominantly non-native invasive honeysuckle) is being disturbed within 50 feet of the HAT.
- 5 tree species are proposed in approximate equal quantities with the evergreen trees located between the road shoulder grading and the top of embankment where they are anticipated to fit under the remaining mature forest canopy, and between existing trees and ledge. Field verification during construction will be required to ensure final plant locations are feasible if shallow ledge or significant remaining tree root stock is present.
- 3 shrubs (2 evergreen and 1 deciduous) are proposed to plant at the toe of the road embankment as well as in areas around the turnaround where fitting larger trees will be challenging given limited space and the need to maintain an area for plowed snow.
- Deciduous trees are spread throughout the area.
- The bioretention cells will be filled with a mix of wet, drought and salt tolerant shrubs and perennials which are shown on the plan as a hatched area. The notes on the plan and drawing C-16 plant schedule describe the random pattern mixing of these plants throughout the bio retention cells.

- All other disturbed areas will be planted with a native roadside mix of perennial grasses and flowers. It is recommended that this area be mowed once a year in the fall to maintain the mix of plants. If mowed more often, it will revert to mostly lawn grasses.
- Mature plant sizes are listed on the plant list to give a sense of the amount of screening that may occur over time.

e) Service, Storage, and Utility Areas

Not applicable

f) Paving, Parking, and Storage Areas

No paving, parking, or storage is located within the side or rear setback of the property, nor within the front setback of the property.

g) Handicapped Accessibility

The pier is designed to meet ADA requirements.

h) Loading Facilities

Not applicable.

i) Parking, Loading, and Protective Buffers

The non-vegetated area of the land being developed will be less than 75% and a minimum of 25% of the land area being developed either remains in its natural state or consists of landscape and lawn areas.

j) Open Space

Not applicable.

k) External Lighting

An electrical site plan is included in the drawing set which shows the site lighting. Full cut off fixtures will be utilized and lighting will be the minimum necessary for safety and functionality.

l) Signs

Not applicable.

m) Historic and Archeological Resources.

See attachment 10 for a letter from the Maine Historic Preservation Commission clearing the project.

Shoreland Zoning Land Use Standards

The project will comply with the applicable standards of Article XIV. Section 15.C.

- Access from shore will be developed on soils appropriate for the use. A detailed erosion control plan has been prepared for the project.

- The location does not interfere with existing beach areas.
- The facility has been located to minimize adverse effects on fisheries. The plan was reviewed be the National Marine Fisheries Service.
- The facility size is the minimum necessary to carry out current and future research activities, and is consistent with the surrounding character and uses of the area, including the Camp Ellis pier on the opposite side of the river.
- An 8 ft x 10 ft shed for storage of life jackets, tools, research equipment is proposed on the pier, and is an operational necessity. The shed will not exceed 20 ft in height.

We are in hopes the planning board will find that the proposal is consistent with city regulations and approval standards. We look forward to meeting with the planning board at the next available meeting.

If you have any questions or comments, please contact me.

Sincerely,
Site Design Associates



Tom Saucier, P.E.
President

cc: Andrew Philippe, RA, NCARB, Director for Campus Planning

Attachment 1
Formal Site Plan Review Application

City of Biddeford – Planning Department
Planning Board Application
P.O. Box 586, 205 Main Street Biddeford, Maine 04005
207-284-9115

Type of Application:

x Shoreland Zoning Permit | x Site Plan Review (Please include checklist) | __ Extraction
__ Conditional Use Permit | __ Subdivision (Please include Checklist) | __ Private Way
__ Other: _____

Applicant Information:

Name: University of New England
Mailing Address: 11 Hills Beach Road Biddeford, Maine
Telephone: 207-602-2365
Email: aphilippe@une.edu
What is your legal interest in the property?
x Owner __ Potential Buyer with Contract __ Lease/Rental Agreement

Owner's Information:

Name: Applicant
Mailing Address: _____
Telephone: _____
Email: _____

Agent's Information:

Name: Tom Saucier, P.E. Site design Associates
Mailing Address: 23 Whitney Way Topsham, Maine 04086
Telephone: 207-449-4275
Email: tsaucier@sitedesignassociates.biz

Engineer/Surveyor's Information:

Name: Agent
Mailing Address: _____
Telephone: _____
Email: _____

Project Location and Lot Information:

Street Address: 11 Hills Beach Road Drainage Watershed: Tidal portion of Saco River
Tax Map: 52 Lot: 4
Current Zoning: IN Shoreland Zoning: Limited Residential
Size of Lot: 49.9 (x)acres ( )s.f. Lot Frontage: 1,489 ft +\-
Existing Use of Property: University use - Girard Marine Science Center

Property currently serviced by:

x City Road __ Public Sewer x Public Water __ Public Trash
__ Private Road __ Septic System __ Private Well x Private Hauler

Slope Conditions in Area of Construction (if applicable):

__Flat (0-3% slope) __Rolling (3-8% slope) x Hilly (8-15% slope) x Steep (15%+ Slope)

Are there any wetlands or waterbodies on the site? x (Yes)__(No) if yes attach information
Is the project within the 100-year floodplain? __ (Yes) x (No) if yes attach information
Do you plan to bring fill onto the lot? x (Yes) __(No) If yes attach information

Description of proposed use of property:

Project/Proposed Use:

University use - Research Pier

Property to be Serviced by:

x City Road __ Public Sewer x Public Water __ Public Trash

__ Private Road __ Septic System __ Private Well x Private Hauler

Limits of Disturbance: 0.5 (x)acres ( )s.f.

Net change in impervious cover: 0.249 (x)acres ( )s.f.

Is this project part of a larger project? __(Yes) x (No)

Is the project proposing a new Private or Public Road? __(Yes, Private) __(Yes, Public) x (No)

Is this project within the Urbanized Area/MS4 (*see City Drainage Map*) x (Yes) __(No)

Is the project proposing any Stormwater facilities/BMPs? x (Yes) __(No)

Will a Traffic Movement Permit (TMP) be required?: __(Yes) x (No)

x **If in a Shoreland Zone:**

Percent of residential lot coverage (Max 20%): N/A

Percent of structure expansion (Max 30%): N/A

__ **If Subdivision Review, number of lots proposed:** _____

__ **If a Private Way is proposed, number of lots served:** _____

If Site Plan Review, you must provide the following information:

Total new square feet footprint of structure: _____

Total new square feet paving/parking: 10,850 +/-

Waiver Requests (attach details):

1. Article XI.II.Section 5.B.1.a. - See cover letter
2. Article XI.II. Section 5.B.1.e.3. - Slopes steeper than 2:1 in ledge
3. _____
4. _____
5. _____

Required Submittal Attachments:

A. Letters of Approval

x Fire Department – Contact Chief or Deputy Chief – 282-9986 (Request sent; previously revised plans

__ Ability to Serve for Water Service – Maine Water – 282-1543 in response to BFD comments.)

__ Ability to Serve for Sewer Service – Engineering Department – Tom Milligan 284-9118

__ Police Department – e-911 Road Name Designation – Contact Joanne Fisk 282-5127

__ Ability to Serve for Electrical Service-CMP-1-866-225-4200

x Letter to Planning Board describing project, Waiver requests, proposed improvements, addressing permit requirements, etc.

B. Photographs of Site.

C. Architectural renderings/drawings of proposed buildings, as required.

D. Engineering Plans, as required.

E. Stormwater Management Report, as required.

Fees (Due at time of Submission):

- $75 Nonrefundable Administration Fee is required for every application.
- Refer to "Attachment A Fees and Charges" of the Land Development Regulations for more information. Consult with Planning Staff if you have questions.

Required Signatures:

By signing this application, as the foresaid applicant or authorized agent:

- I certify that I have read and completely understand the application;
- I certify that the information contained in this application and its attachments are true and correct;
- I understand that all information provided on this form and all other documents submitted as part of my proposal is a matter of public record;
- I understand that copies of this information may be supplied upon request to an interested party.
- I understand that additional funds may be required through the course of the review for special studies, legal review costs, and/or engineering review.
- I understand that by submitting an application I am not guaranteed a place on any particular agenda. I further understand that the City Planner will place me on an agenda for review when the application is deemed substantially complete.

Will the proposed project cause 1 acre or more of site disturbance? __(Yes) x (No)

- **If Yes, applicant is responsible for any required Maine Construction General Permits and shall comply with the requirements of DEP Chapter 500 Stormwater Regulations, as they apply.**

Signature of Applicant: _____ **Date** 4/15/25

Signature of Property Owner: _____ **Date** 4/15/25

DIGITAL SUBMITTAL REQUIREMENTS FOR ALL SUBMITTALS:

A) PDF OF SIGNED APPLICATION

B) PDFs OF ALL DRAWING SETS AND OTHER REQUIRED SUBMITTAL ATTACHMENTS NOTED ABOVE

HARD-COPY SUBMITTAL REQUIREMENTS FOR PLANNING BOARD APPLICATIONS:

A) SEVEN (7) FULL-SIZE PAPER COPIES OF DRAWING SETS

DIGITAL SUBMITTAL REQUIREMENTS FOR FINAL APPROVAL:

A) INDIVIDUALLY NAMED PDFs OF EACH DRAWING (NOT A COMBINED PDF SET)

- Individual Drawing PDF Naming Format: 'PROJECT/SHEETSET NAME_INDIVDUAL DRAWING NAME.pdf'

B) PDF COPIES OF ALL PERMIT APPROVALS, APPLICATIONS, REPORTS, NARRATIVES, LETTERS, ETC.

C) FINAL CAD REFERENCE FILES IN DWG FORMAT (SURVEY & PROPOSED DESIGN LINEWORK)

- All drawings & CAD reference files must be to-scale and within the following coordinate systems:

- MAINE STATE PLANE WEST NAD83 (Horizontal Datum) & NAVD88 (Vertical Datum)

HARD-COPY SUBMITTAL REQUIREMENTS FOR FINAL APPROVAL:

A) THREE (3) FULL-SIZE PAPER COPIES OF INDIVIUDAL DRAWINGS REQUIRING BOARD SIGNATURE

B) ONE (1) FULL-SIZE PAPER COPY OF ENTIRE DRAWING SET FOR ENGINEERING RECORDS

PLEASE CONFIRM WITH PLANNING STAFF FOR CLARIFICATION

Attachment 2
Letter of Agent Authorization

UNIVERSITY OF NEW ENGLAND

Biddeford Campus
11 Hills Beach Road
Biddeford, ME 04005
(207) 283-0171 T

Portland Campus
716 Stevens Avenue
Portland, ME 04103
(207) 797-7261 T

May 29, 2023

Mr. Tom Saucier
Site Design Associates
23 Whitney Way
Topsham, Maine 04086

TO WHOM IT MAY CONCERN:

This letter authorizes Tom Saucier, Site Design Associates, to serve as an agent for University of New England for the purpose of permitting the proposed installation of a research pier and float on its Biddeford campus.

Sincerely,

Alan Thibeault
Vice president for University Operations

Attachment 3
Site Plan Checklist

CITY OF BIDDEFORD - SITE PLAN & SUBDIVISION APPLICATION DRAWING CHECKLIST *LAST REVISED: 11/26/2024*

CHECKLIST DIRECTIONS:

1. The following checklist must be completely filled out by the applicant and included on all preliminary and final Site Plan & Subdivision submittals. No checklist is required for sketch submittals.
2. Applicant to confirm all of the items listed are included within the submittal. Any missing items must have adequate reasoning to justify their absence.
3. City to review applicant's submittal and checklist responses. Projects missing substantial submittal information with non-acceptable reasoning will be rejected and required to resubmit.
4. Items in **BLACK** are required for 'Preliminary' approval & 'Final' approval.
5. Items in **BLUE** are only required for 'Final' approval.

SUBMITTAL INFORMATION - TO BE FILLED OUT BY APPLICANT	
Project Name:	University of New England - Research Pier
Planning Board # (if available):	
Applicant Name/Info:	University of New England
Submittal #/Type (Prelim/Final):	Preliminary/Final
Submittal Date:	15-Apr-25

SUBMITTAL REQUIREMENT		APPLICANT RESPONSE			CITY REVIEW RESPONSE	
ITEM NUMBER	DESCRIPTION	INFORMATION PROVIDED (YES/NO)	LIST DRAWING SHEET NUMBER WHERE INFORMATION IS PROVIDED	REASON NOT PROVIDED/COMMENT	ACCEPTABLE (YES/NO-REVISE & RESUBMIT)	COMMENT
1	**GENERAL PLAN REQUIREMENTS**	YES				
A	Drawing specific legends (linetypes, hatches, etc.)	YES				
B	Individual drawing layer control should be utilized: freeze/thawing, changing lineweights, and screening (i.e. screen existing layers on a proposed plan, freeze topography and underground utilities on a proposed site plan)	YES				
C	North arrows, standard engineering scale viewports, scale bars, dated revision blocks	YES				
D	All drawings and surveys must be in the following coordinate systems: NAD83 Maine State Plane West (Horizontal) and NAVD88 (Vertical)	YES				
E	Drawings need to be designed, signed & sealed by a Maine licensed professional engineer (PE); all boundary survey data needs to be performed by a licensed professional land surveyor (PLS)	YES				
2	**COVER SHEET**	YES				
A	Project Name & Property Address	YES				
B	Project Team Contact Information (Owner, Engineer, Contractor, etc.)	YES				
C	Site Location Map	YES				
D	Sheet Set List of Drawings	YES				
E	Tax Map and Lot ID	YES				
F	Zoning & Shoreland Zone Information	YES				
G	Existing Use Description	YES				
H	Proposed Use Description	YES				
I	Required Waiver/Variances (Yes/No); if yes, plan must clearly list waivers/variances requesting	YES				
J	Name of Drainage Watershed	YES				
K	Within the MS4 Urbanized Area (Yes/No)	YES				
L	Natural resources (streams, wetlands, etc.) located on-site or adjacent to the property (Yes/No)	YES				
M	Within the 100-year Flood Zone (Yes/No)	YES				
N	Public Road Proposed (Yes/No)	NO				
O	Private Road Proposed (Yes/No)	YES				
P	Public Sewer Connection (Yes/No)	YES	EXISTING			
Q	Public Storm Drain Connection (Yes/No)	NO				
R	Limits of Disturbance in square feet and acres	YES				
S	Pervious Land Cover square footage, existing and proposed	YES				
T	Impervious Land Cover square footage (Pavement/Gravel), existing and proposed	YES				
U	Building Roof square footage, existing and proposed	YES				
V	Assigned Planning Board Number	N/A				
W	Estimated cut/fill earthwork volumes. If disturbing within the Flood Zone, a separate set of earthwork volumes required (overall site vs. within flood zone)	YES				
3	**EXISTING CONDITIONS PLAN**	YES				
A	Horizontal & Vertical Datums annotated (NAD83 & NAVD88)	YES				
B	Property & Right-of-Way Lines	YES				
C	Boundary line information (bearings, distances, etc.)	YES				
D	Property pin and monumentation locations	YES				
E	Existing easements with proper ownership identified	YES				
F	Road Names & Individual Lot Labels (Map, Lot, Owner, Acreage)	YES				
G	Location of any Natural Resources and their respective buffers (wetlands, streams, etc.)	YES				
H	100-year Flood Zone Limits & Elevation	YES				
I	Existing contours with adequate contour labelling; minimum 1’ contour interval	YES				
J	Existing building FFEs annotated	YES				
K	Spot elevations for all tie-in locations (curb cuts, property line)	YES				
L	Existing buildings & structures	YES				
M	Existing pavement areas & number of parking spaces	YES				
N	Existing ADA ramp geometry, detectable warning plates, and ADA parking spaces	YES				
O	Existing site features (sidewalks, retaining walls, curbing, lightpoles, guide rails, dumpsters, fencing)	YES				
P	Existing signage and striping	YES				
Q	Existing underground utility locations (storm, sewer, force main, water, gas, elec, tele)	YES				
R	Existing above-ground utility locations (manholes, catch basins, utility poles, hydrants, transformers, riprap)	YES				

	S	Rim, invert in, invert out, pipe size, cardinal direction (N, E, S, W) information for any existing utility infrastructure being tied into (upstream/downstream/outfalls)	YES				
	T	Existing tree lines, street trees, free-standing trees (12” or larger diameter at breast height), and vegetation	YES				
	U	Location of any borings, drinking wells, and monitoring wells	YES				
4		**SITE DEMOLITION & EROSION CONTROL (E&SC) PLAN**	YES				
	A	Limits-of-disturbance outlined and acreage annotated	YES				
	B	Location of any Natural Resources and their respective buffers (wetlands, streams, etc.)	YES				
	C	100-year Flood Zone Limits	YES				
	D	Callout existing site features to be demolished/removed/replaced	YES				
	E	Callout existing utilities to be demolished/removed/abandoned-in-place	YES				
	F	Hatch existing buildings and pavement to be removed	YES				
	G	Construction Entrance location(s)	YES				
	H	Perimeter E&SC control location(s) (i.e. silt fence, erosion berm mix)	YES				
	I	Stockpile and staging area(s) identified (with proper perimeter control)	YES				
	J	Inlet protection location(s)	YES				
	K	Note requiring contractor to implement dust control measures throughout construction	YES				
	L	Note requiring contractor to pave utility trenches within right-of-way within 3 days of excavation or prior to any rain event	N/A				
	M	If groundwater expected, show dewatering/silt bag location(s); show temporary pumping routing	NO				
	N	If large development is proposed with an extensive underground stormwater conveyance network, identify how SWM infrastructure and BMPs will be protected during construction and if sediment traps/basins are needed	N/A				
5		**SITE PLAN/SUBDIVISION PLAN**	YES				
	A	Partial Site Plans needed for any viewport scale greater than 1”=20’	YES				
	B	Existing property and right-of-way lines	YES				
	C	Proposed subdivision lot lines and labels	YES				
	D	Required Zoning Setbacks shown with dimensions and annotation	YES				
	E	Bulk requirement summary table (zoning/parking calculations)	YES				
	F	Location of any Natural Resources and their respective buffers (wetlands, streams, etc.)	YES				
	G	100-year Flood Zone Limits	YES				
	H	Proposed building outlines, door entrances and loading docks	YES				
	I	Proposed building labels	YES				
	J	Proposed road & sidewalk extents; provide clear annotation if roads will be public or private	YES				
	K	Proposed parking and accessible parking locations; annotate parking space counts	YES				
	L	Proposed signage, parking striping, and traffic striping	YES				
	M	Detailed ADA ramp geometry, detectable warning surfaces, and ADA parking striping/signage; existing & proposed	YES				
	N	Proposed site features (i.e. curbing, walls, fencing, guiderail, fire hydrant, transformers, light pole locations)	YES				
	O	Proposed landscaping; detailed landscaping design should be shown on separate plans	YES				
	P	Designated snow storage areas	YES				
	Q	Proposed dumpster locations and trash removal access	YES				
	R	Linear dimensions of all drive aisles, sidewalk widths, parking spaces, loading docks	YES				
	S	Radial dimensions for all curbs, landscaped islands, sidewalks	YES				
	T	Public/private road centerline stationing shown, labelled every 0+50’ with curve data	YES				
	U	If Private Road is proposed, final recorded plans must clearly note that proposed private roads will not be submitted in the future for public acceptance	YES				
	V	If Private Road is proposed, final recorded plans must clearly note that the City is not responsible for any maintenance, repair, plowing, or trash removal of proposed private roads	YES				
	W	Planning Board signature block for final recording	YES				
6		**GRADING PLAN**	YES				
	A	Partial Grading Plans needed for any viewport greater than 1”=20’	YES				
	B	Limits-of-disturbance outlined and acreage annotated	YES				
	C	Proposed Building Labels with Individual Finished Floor Elevations (FFEs)	YES				
	D	Existing contours with adequate contour labelling, screened; minimum 1’ contour interva	YES				
	E	Proposed contours with adequate contour labelling; minimum 1’ contour interval	YES				
	F	Detailed grading for all ditches, swales, outfalls, and riprap	YES				
	G	All proposed contours tie-into existing contours at limits-of-disturbance outline	YES				
	H	Existing spot elevations for all asphalt, curb, and SWM BMP tie-in locations	YES				
	I	Location of any Natural Resources and their respective buffers (wetlands, streams, etc.)	YES				
	J	100-year Flood Zone Limits	YES				
	K	Proposed spot elevations for all important roadway geometric points (including but not limited to: parking/drive aisles, building corners/entrances, retaining walls, loading docks, EOP/curblines)	YES				
	L	Proposed spot elevations for all ADA ramp/landing/parking stall geometry points	N/A	No new ADA proposed			
	M	Proposed % slope arrows for all ADA parking spaces and sidewalks	N/A	No new parking proposed			
	N	Proposed longitudinal % slope arrows for drainage ditch centerlines	YES				
	O	Proposed % slope arrows for roads, parking areas, and landscape tie-in areas	YES				

P	Estimated cut/fill earthwork volumes. If disturbing within the Flood Zone, a separate set of earthwork volumes required (overall site vs. within flood zone)	YES				
7	**ROAD PROFILES (if public/private road proposed)**	YES				
A	Existing surface; dashed and screened	YES				
B	Proposed surface; continuous and bold	YES				
C	Road design speed must be clearly identified	YES				
D	Corresponding centerline stationing and curve data annotation	YES				
E	All vertical curves must identify the proposed 'K' values and confirm they meet the minimum design speed thresholds listed in AASHTO's Green Book Tables 3-35 & 3-37	YES				
F	Clear annotation if proposed road will be public or private	YES				
G	If Private Road is proposed, plans must clearly note that proposed private roads will not be submitted in the future for public acceptance	YES				
H	If Private Road is proposed, plans must clearly note that the City is not responsible for any maintenance, repair, plowing, or trash removal of proposed private roads	YES				
8	**UTILITY PLAN**					
A	Existing underground utility locations; screened (storm, sewer, force main, water, gas, electric, telecom)	YES				
B	Existing above-ground utility locations; screened (manholes, catch basins, utility poles, hydrants, riprap)	YES				
C	Rim, invert in, invert out, pipe size, cardinal direction (N, E, S, W) information for any existing utility infrastructure being tied into (upstream/downstream/outfalls)	YES				
D	Proposed underground utility locations; bold (storm, sewer, force main, water, gas, electric, telecom, lighting)	YES				
E	Proposed above-ground utility locations; bold (manholes, catch basins, utility poles, hydrants, transformers, riprap)	YES				
F	Proposed storm culverts, outfalls, and riprap locations and sizes	YES				
G	Storm/sewer structure labels must include: rim, inverts in, inverts out, pipe sizes, cardinal directions (N, E, S, W)	YES				
H	Storm/sewer pipe labels must include: linear footage, pipe size, material, slope	YES				
I	Flow directional arrows for storm & sewer pipes	NO	Flow direction can be determined by analyzing inverts			
J	Proposed & existing site features shown that could conflict with proposed utilities (trees, signs, lightpoles, bollards, foundations, guiderails)	YES				
K	All storm drains must be sized to convey the 25-year storm	YES				
L	Sewer force main sizes and invert elevations	NO	No Force main proposed			
M	Sewer pump station locations, model, rim, inverts, pipe sizes, cardinal directions (N,E,S,W); additional details and hydraulic calculations required for any Public pump station proposed.	NO	No pump stations proposed			
N	Locations, sizes, and elevations of any: grease traps, oil-water separators, septic systems, drinking wells	NO	None proposed			
O	Proposed water sizes labelled	NO	None proposed			
9	**UTILITY PROFILES**					
A	Utility profiles required for **all** gravity storm drain and sewer pipes proposed: within the right-of-way, within private or public roads, for non-driveway culverts, and for any public infrastructure tie-ins	NO				
B	Existing surface; dashed and screened	NO				
C	Proposed surface; continuous and bold	NO				
D	Storm/sewer structure labels must include: rim, inverts in, inverts out, pipe sizes, cardinal directions (N, E, S, W)	NO				
E	Storm/sewer pipe labels must include: linear footage, pipe size, material, slope	YES				
F	Existing and proposed gravity pipe crossings shown; sizes labelled and depths/clearance annotated	YES	No pipe crossings proposed			
G	Existing and proposed electric/water/telecom/gas crossings shown at approximate depths; sizes labelled and depths/clearance annotated	YES	None proposed			
10	**DETAILS**					
A	Road section detail, including pavement/gravel depths & cross slopes	YES				
B	Sidewalk, paver, crosswalk, and any other pavement section details	N/A	None proposed			
C	Pavement sawcut & shiplap details	YES				
D	Utility trench/backfill detail	YES				
E	All site feature details; curbing, retaining walls, fencing, guiderails, dumpsters, etc.	YES				
F	Signage, striping, and ADA details	N/A	None proposed			
G	E&S notes and details	YES				
H	Utility structure details (manholes, cleanouts, fittings, handholes, transformer pads, hydrants)	YES				
I	Storm outfall & riprap details	YES				
J	Drainage ditch cross section identifying minimum depth, minimum bed width, and maximum side slopes	NO				
K	Pump station, grease trap, oil-water separator, septic, drinking well details	N/A	None proposed			
L	Conduit section details	N/A	None proposed			
11	**LANDSCAPING, LIGHTING & PHOTOMETRIC PLANS**					
A	As required by ordinance; at a minimum: locations, counts, lighting models, and landscaping species must be identified	YES	Revegetation plan provided			
B	Landscaping & lighting details	YES	Revegetation plan provided			

12	DOCUMENTS/REPORTS/CALCULATIONS					
A	On initial preliminary submittal applications, applicant must submit a development review and inspection fee. Applicant to coordinate fee amount with City Planner prior to submittal. This fee will be drawn against to cover the following type of services throughout the project life cycle (and may require replenishing): i. 3rd Party City Peer-Review ii. Site Inspections during the permitting process iii. Erosion & Sediment Control Inspections during construction iv. Right-of-Way Inspections during construction v. Site Punchlist/As-Built Inspections post-construction	To be determined				
B	Stormwater Management Report, including: 1. Predevelopment & Post-development Drainage Area Maps, including: a. Subdrainage areas delineated and labeled b. Points of Interest/Analysis shown and labeled c. Hatching for different land cover areas (impervious, pervious, gravel) within each applicable USDA soil boundary d. Time of concentration (Tc) paths & durations e. Four City-standardized stormwater summary tables 2. If any SWM water quality BMP or detention facility is proposed, hydrologic model exports/hydrographs must be submitted for the for the 2, 10, 25, & 100-year storm frequencies 3. Sizing calculations for any SWM water quality BMP or detention facility 4. A stormwater maintenance manual for any proposed SWM water quality BMP or detention facility, including: a. Annual maintenance requirements b. Annual inspection requirements by a licensed PE; noting that all inspection reports/logs need to be submitted to the Engineering Department by March 1st each following year, identifying what on-going maintenance has occurred and what remedial repairs are needed c. Signed Property Owner Agreement: including the current property owner's contact information and signature; it must be noted that all stormwater BMP maintenance requirements are linked to the property for perpetuity and transfer to any new ownership	Yes				
C	An approved 'Sewer Ability-to-Serve Letter' from the Engineering Department: i. Applicant to submit proposed sewer flow calculations per Maine's Subsurface Wastewater Disposal Rules, Chapter 241, Section 4 (Tables 4A & 4C)	N/A	No new buildings/sewer conveyance proposed			
D	A Performance Guarantee Cost Estimate utilizing Planning's template	YES				
E	For any Site Location of Development (SLODA) project, the applicant's submittal must mimic a formal submittal to DEP. Submit must abide to DEP's SLODA application and include DEP's SLODA Submittal Checklist (Form D)	N/A				
F	25-year hydraulic calculations for all storm conveyance infrastructure (pipes, culverts, drainage ditches); starting tailwater conditions/documentation must be clearly identifiec	YES				
K	Public sewer pump station sizing calculations and maintenance plan	N/A	No pump stations proposed			
M	Grease trap sizing calculations	N/A	No grease traps proposed			
N	Homeowner Association (HOA) agreement for any private road serving two (2) lots or more	N/A	No HOA			
O	Summary list & copy of any required DOT/DEP/USACE permits & approvals	YES				

Attachment 4
Location Map

RECREATIONAL PIER JORDAN POINT

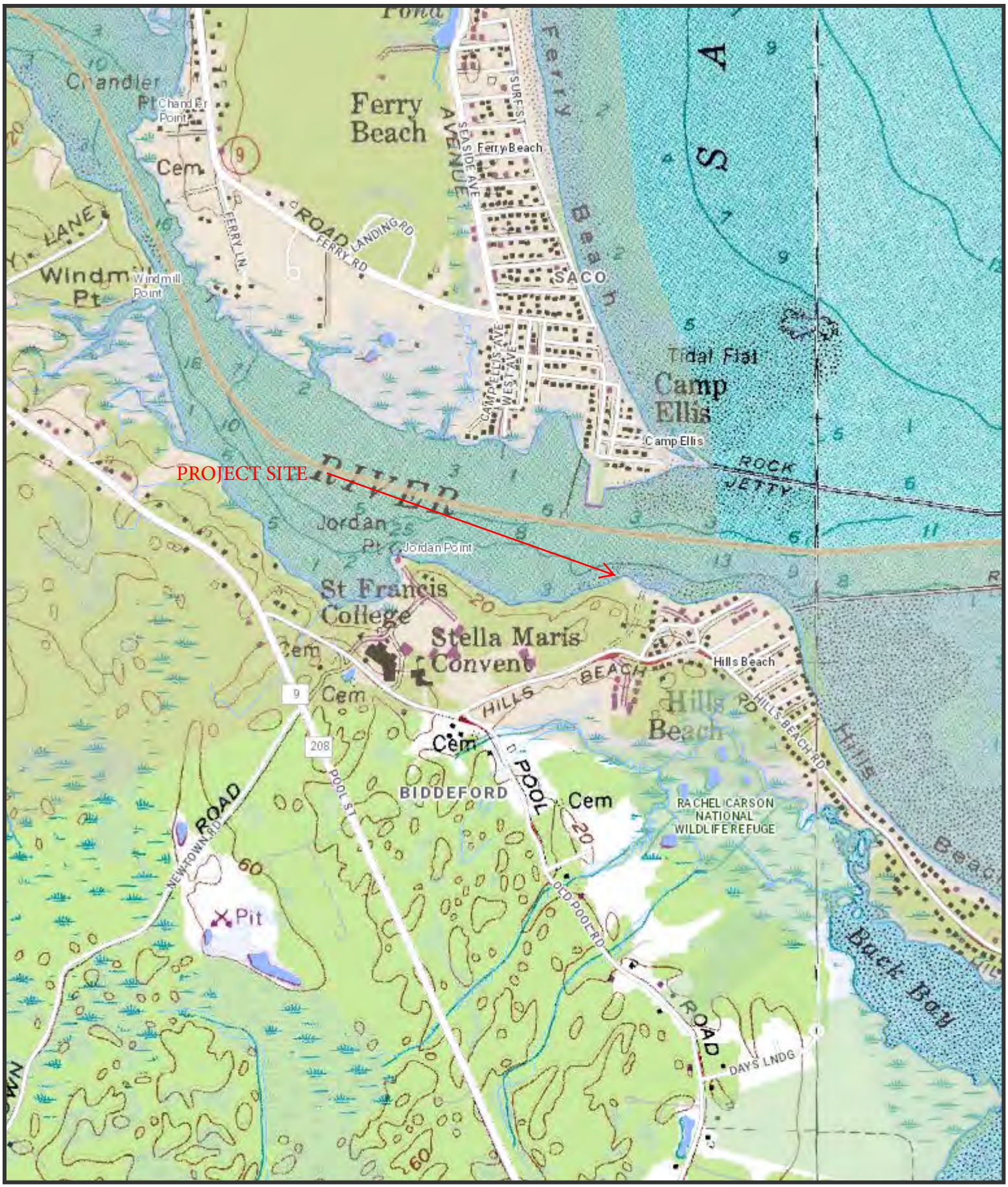

The Maine Department of Transportation provides this publication for information only. Reliance upon this information is at user risk. It is subject to revision and may be incomplete depending upon changing conditions. The Department assumes no liability if injuries or damages result from this information. This map is not intended to support emergency dispatch.

0.25 Miles

1 inch = 0.28 miles

Date: 6/8/2023
Time: 3:54:08 PM

Attachment 5
Deed

Excepting and reserving, however, from the last parcel described a small triangular parcel of land in the rear of the premises of Charles E. Roberts which triangular lot has a base of about 50 feet in length which is an extension of the northwesterly boundary of said Roberts lot; and has an altitude of about 100 feet in length which is the northeasterly side thereof and is located in the center of a ditch long supposed to be the rear line of the Roberts lot; and which has a hypotenuse which is coincident with the rear line of said Roberts lot and is the southerly side of said triangule, being the same premises conveyed by Blanche T. Beuscher and Olga M. DeHaven to the said Kenneth A. Littlefield and Barbara A. Littlefield, by their deed of mortgage dated on the twentieth (20) day of February 1958 and recorded in York Registry of Deeds, Book 1354, Page 447, but described under the aforementioned reference only as three certain lots or parcels of land, with buildings thereon, and mentioned as being the same premises conveyed on February 20th, 1958, by Kenneth A. and Barbara A. Littlefield to Blance T. Beuscher and Olga M. DeHaven, by Warranty Deed, Recorded Book 1362, Page 112; and that such entry was made and possession taken as aforesaid, for the avowed purpose of foreclosing said mortgage, because of a breach of the condition thereof.

Raymond E. Mealey

Madeline C. Mealey

STATE OF MAINE

COUNTY OF YORK, SS March 24, 1962 Signed and sworn to by the said Raymond E. Mealey and Madeline C. Mealey,

Before me. Maurice L. Shibles Notary Public (L.S.)
My Commission Expires Sept. 2, 1966

Recorded according to the original received April 6, 1962 at 11h. 58m. A. M. EL

KNOW ALL MEN BY THESE PRESENTS, THAT, COUVENT de la PRESENTATION de MARIE, a corporation organized and existing under the laws of the State of Maine and located at Biddeford, in the County of York and said State of Maine, in consideration of One Hundred Fifty Thousand Dollars ($150,000.00) paid by THE FRANCISCAN FATHERS OF MAINE, a corporation duly organized by law and having an established place of business at 605 Pool Road, in said Biddeford, the receipt whereof it does hereby acknowledge, does hereby give, grant, bargain, sell and convey, unto the said The Franciscan Fathers of Maine, its successors or assigns, forever, the following described property: I.R.S. One Hundred and Sixty Five Dollars

Parcel 1

A certain lot or parcel of land, with the buildings thereon, situated in

said Biddeford and bounded and described as follows:

BEGINNING at a point on the Northerly side of the Hill's Beach Road, so-called, in said Biddeford, said point being the Westerly corner of the land herein conveyed and being in the Southerly line of land formerly of one Finney and now of Couvent de la Presentation de Marie, and being marked by an iron stake driven into the ground; thence South eighty-two degrees eight minutes East (S 82° 08' E) two hundred fourteen and forty-six one-hundredths (214.46) feet by said Hill's Beach Road to an iron stake driven into the ground; thence North eighty-one degrees forty-two minutes East (N 81° 42' E) five hundred forty-five and five one-hundredths (545.05) feet by said Hill's Beach Road to an iron stake driven into the ground; thence South fifty degrees thirty-five minutes East (S 50° 35' E) two hundred thirty-eight and forty-seven one-hundredths (238.47) feet by said Hill's Beach Road to an iron stake driven into the ground and other land of this Grantor; thence North eighty-six degrees twenty-seven minutes East (N 86° 27' E) sixteen and ninety-one one-hundredths (16.91) feet by said other land of this Grantor to a drill hole into the ledge and land now or formerly of John J. Traynor; thence North three degrees thirty-three minutes West (N 3° 33' W) one hundred thirty-three and five tenths (133.5) feet by said land of John J. Traynor, land now or formerly of one Michael Reddy and a reserved street as shown on a plan of land of William A. Chadbourne, drawn by Z. G. Staples, July 14, 1874, and recorded in York County Registry of Deeds in Plan Book 2, Page 40, and by the stone wall to an iron stake driven into the ground at the Southwesterly corner of land now or formerly of William Libby; thence North twenty-two degrees forty-one minutes West (N 22° 41' W) one hundred twenty-eight and one-half (128½) feet by said land of William Libby, other land of this Grantor and by the stone wall to an angle in said stone wall; thence North fifty-five degrees fifty-seven minutes East (N 55° 57' E) three hundred ninety-three and nineteen one-hundredths (393.19) feet by said other land of this Grantor, by a reserved street as shown on said plan, and land now or formerly of Thomas Gallagher and by the fence and wall to an iron stake driven into the ground at the top of the bank; thence this same course to Saco River; thence Northerly, Northwesterly and Westerly by said River to an iron stake driven into the ground at a point of ledge and to said other land of this Grantor; thence South forty-one degrees East (S 41° E) three hundred thirty-nine and seven tenths (339.7) feet to an iron stake driven into the ground at the stone wall; thence South sixty-three degrees West (S 63° W) fifty-six and three tenths (56.3)feet by said stone wall to an iron stake driven into the ground; thence South sixty-nine degrees fifteen minutes West (S 69° 15' W) one hundred sixteen and one-half (116½) feet by said

wall to an iron stake driven into the ground; thence South fifty-three degrees forty minutes West (S 53° 40' W) one hundred twenty-eight and five tenths (128.5) feet by said wall to an iron stake driven into the ground; thence South sixty-eight degrees nineteen minutes West (S 68° 19' W) one hundred and four tenths (100.4) feet by said wall to an iron stake driven into the ground; thence North eighty-eight degrees four minutes West (N 88° 04' W) seventy-seven and nine tenths (77.9) feet by said wall to an iron stake driven into the ground; thence South seventy-four degrees twenty-three minutes West (S 74° 23' W) seventy-nine and two tenths (79.2) feet by said wall to an iron stake driven into the ground; thence South fifty-seven degrees nineteen minutes West (S 57° 19' W) ninety-five and one tenth (95.1) feet by said wall to an iron stake driven into the ground; thence South sixty-four degrees ten minutes West (S 64° 10' W) one hundred six and nine tenths (106.9) feet by said wall to an iron stake driven into the ground; thence South sixty-five degrees thirty minutes West (S 65° 30' W) one hundred forty-four and eight tenths (144.8) feet by said wall to the point of beginning. The last ten courses described being bounded by said other land of this Grantor. The above courses refer to the 1931 magnetic meridian.

Parcel 2

Also another certain lot of land, bounded and described as follows:

BEGINNING at an iron stake driven into the ground at the Southerly corner of the above described parcel and on the Northerly side of said Hill's Beach Road; thence North eighty-six degrees twenty-seven minutes East (N 86° 27' E) sixteen and ninety-one one-hundredths (16.91) feet by said above described parcel to a drill hole in the ledge and land now or formerly of John J. Traynor; thence South three degrees thirty-three minutes East (S 3° 33' E) fifteen and seventy-five one-hundredths (15.75) feet by said land of Traynor to said Hill's Beach Road; thence North fifty degrees thirty-five minutes West (N 50° 35' W) twenty-three and eleven one-hundredths (23.11) feet by said road to the point of beginning.

Parcel 3

Also another certain lot or parcel of land, situated at Hill's Beach, so-called, in said Biddeford, and adjoining the first above described parcel, bounded and described as follows:

BEGINNING at the Northwest corner of Lot #18, on a plan of land made by Z. G. Staples for William A. Chadbourne, dated July 14, A. D. 1874, at land of the late Selucus Adams and S. S. Mitchell; thence running Southerly one hundred (100) feet to Lot #17 on said plan; thence Westerly by last named lot fifty (50) feet; thence North forty-eight degrees West (N 48° W) forty-eight (48) feet by land of said Adams; thence North fifty-one and one-half degrees East (N 51½° E) one hundred six (106) feet by land of said Adams and Mitchell to the place of

48
pg 146

Book 1484

beginning, and containing about five thousand four hundred and twenty-four (5,424) square feet, being the same parcel of land as described in deed of James B. Marr and others to Caroline P. Adams, dated April 1, 1891 and recorded in York County Registry of Deeds in Book 443, Page 88.

The above described premises were conveyed to the within Grantor by Les Soeurs de la Presentation de Marie by deed of Warranty, dated September 30, 1932 and recorded in York County Registry of Deeds in Book 834, Page 67.

Parcel 4

Also another certain lot or parcel of land, together with the buildings thereon, situated in said Biddeford and known as the old Ralph Tristram Jordan place situated on the northeasterly side of the Pool Road, so-called, bounded on the southwesterly side by said Pool Road; southeasterly by the road to the beach and land formerly of Mrs. Horace Woodman; on the northeasterly side by the Saco River; and on the northwesterly side by land, now or formerly of J. B. Coolbroth.

For more particular description of the premises hereinabove last described, reference is made to decree of Supreme Judicial Court of Maine in the matter of Hanford E. Finney against claiments known and unknown dated October 3, 1919, and recorded in said York County Registry of Deeds, Book 671, Page 374.

All fixtures and articles of whatever nature permanently attached to said buildings are included in this conveyance.

TO HAVE AND TO HOLD the aforegranted and bargained premises, with all privileges and appurtenances thereof to the said The Franciscan Fathers of Maine, its successors or assigns, to its and their use and behoof forever.

AND it does COVENANT with the said Grantee, its successors or assigns, that it is lawfully seized in fee of the premises; that they are free of all encumbrances; that it has good right to sell and convey the same to the said Grantee to hold as aforesaid; and that it shall and will Warrant and Defend the same to the said Grantee, its successors or assigns forever, against the lawful claims and demands of all persons.

IN WITNESS WHEREOF, the said Couvent de la Presentation de Marie has caused this instrument to be executed and its corporate seal affixed thereto by - - its Treasurer, thereunto duly authorized, this eighteenth day of April, in the year of our Lord one thousand nine hundred and sixty-two.

Signed, Sealed and Delivered
in Presence of

Harold D. Carroll

COUVENT de la PRESENTATION de MARIE
(Corporate Seal)
By Sister St. Leon of Rome
Leona Lafleur
Its Treasurer, thereunto duly authorized.

Attachment 6
Letter of Financial Capacity

UNIVERSITY OF NEW ENGLAND

Biddeford Campus
11 Hills Beach Road
Biddeford, ME 04005
(207) 283-0171 T

Portland Campus
716 Stevens Avenue
Portland, ME 04103
(207) 797-7261 T

April 14, 2025

To Whom It May Concern:

The University of New England plans to construct a research pier facility, along with an associated access road, on its Biddeford Campus. This new facility will have an estimated total project cost of $5,500,000. The University of New England has received a federal appropriation for $3,500,000 for this project, a and another $1,000,000 has already been received in private donations. The remainder of the project will be financed by the university.

Sincerely,

Alan Thibeault
Vice President for University Operations

Attachment 7
Stormwater Management Report



GEI Consultants

STATE OF MAINE
DANIEL J.
BANNON
No. 13033
LICENSED
PROFESSIONAL ENGINEER

April 15, 2025



Table of Contents

1. Introduction 2

2. Methodology 5

3. Pre-Development Conditions 6

4. Post-Development Conditions 8

5. Stormwater Management 10

6. Conclusions 13

Appendices

A. USDA NRCS Soil Survey Report
B. Pre-Development HydroCAD Calculations
C. Post-Development HydroCAD Calculations
D. Inspection and Maintenance Plan

Drawings

SW-01 PRE-DEVELOPMENT DRAINAGE PLAN
SW-02 POST-DEVELOPMENT DRAINAGE PLAN
SW-03 TREATMENT AREA PLAN

C-001 EXISTING CONDITIONS PLAN
C-002 DEMOLITION AND CONSTRUCTION STAGING
C-003 SITE PLAN
C-004 GRADING AND DRAINAGE PLAN
C-005 EROSION CONTROL PLAN
C-006 ACCESS ROAD PLAN AND PROFILE STA 1+00 TO MATCHLINE STA 4+00
C-007 ACCESS ROAD PLAN AND PROFILE MATCHLINE STA 4+00 TO STA 6+60
C-008 ACCESS ROAD TYPICAL SECTION
C-009 ACCESS ROAD SECTIONS 2+00 TO 3+75
C-010 ACCESS ROAD SECTIONS 4+00 TO 5+75
C-011 SITE DETAILS I
C-012 EROSION CONTROL NOTES
C-013 EROSION CONTROL DETAILS I
C-014 EROSION CONTROL DETAILS II
C-015 REVEGETATION PLAN
C-016 REVEGETATION NOTES, DETAILS, AND SCHEDULES

DJB:BM:bdp

B:\Working\UNIVERSITY OF NEW ENGLAND\2203703 UNE Marine Science Center Pier\06_REGULATORY\Stormwater\UNE MSC Stormwater Report Rev. 04-15-2025.docx

1. Introduction

The University of New England (UNE) campus is located along the Saco River in Biddeford, ME. The Marine Science Center is located on the waterfront at the easterly end of campus (Fig. 1) approximately opposite Camp Ellis in Saco. To support MSC research activities, UNE proposes to construct a pier from the shore adjacent to the MSC into the Saco River to provide an all-tide access facility for small and shallow draft vessels (skiffs, landing craft, up to approximately 3-foot draft), with tidally-restricted access for larger vessels.



Fig. 1. Aerial Photo of University of New England Marine Science Center Waterfront

In 2008-2010, UNE worked with Baker Design Consultants (BDC) to undertake a concept planning study for the proposed pier. In this study, nine alternative designs were developed for water access facilities along the UNE waterfront consisting of various configurations of piers, boat ramps, and upland access and support facilities. The alternatives were evaluated on a range of criteria including technical criteria, functionality, constructability, cost and others to identify a preferred facility location. The nine alternatives evaluated through this study are shown in Fig. 2. At the conclusion of this study, Site 7 (directly in front of the Marine Science Center building) was identified as the preferred facility location to develop a new pier facility that would consist of a pile-supported pier extending from shore out into the Saco River.

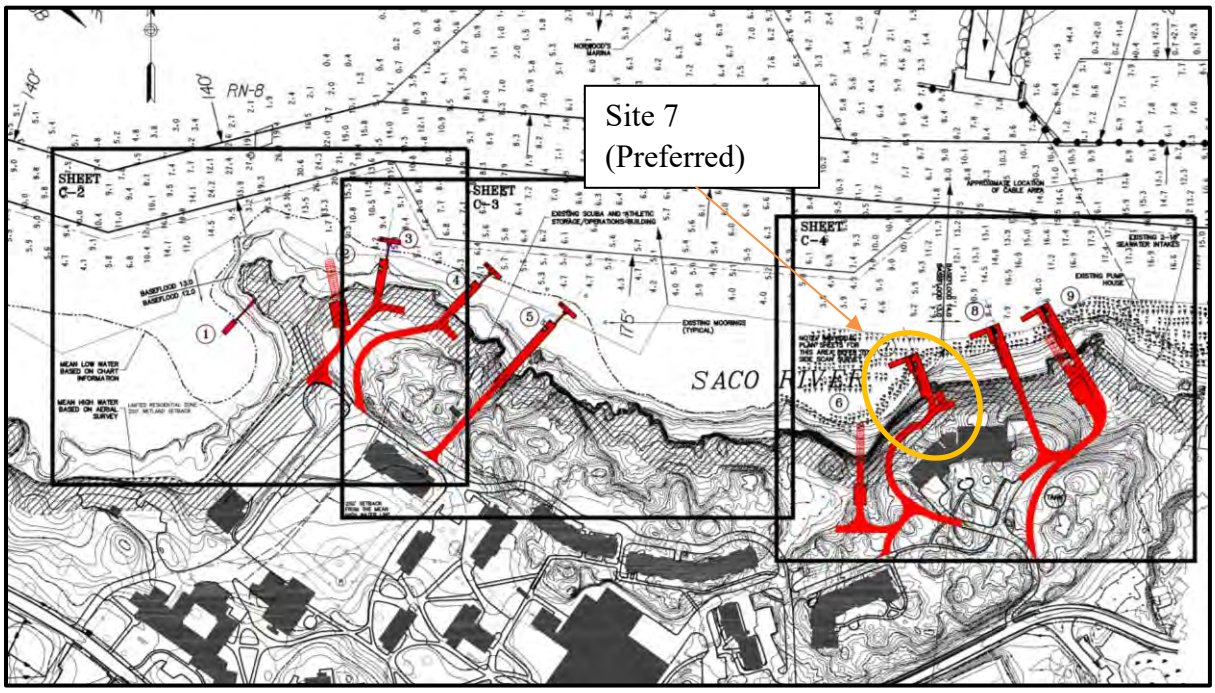

Fig. 2. Pier Location Alternatives from BDC Feasibility Study

In 2015-2016, UNE worked with BDC to undertake further design studies for a pier at the preferred location to investigate structure dimensions, orientation, rough order of magnitude costs, and impacts to coastal resources and features. As part of this evaluation, a preliminary geotechnical investigation was undertaken by GZA Geoenvironmental that included one water boring, two probes, and four test pits. At the conclusion of this phase of work, three alternative layouts were developed and reviewed with staff from UNE, the City of Biddeford, and the Saco River Corridor Commission and memorialized in a memo from BDC dated March 22, 2016.

In February 2022, UNE resumed design of the new proposed pier working with GEI Consultants to confirm conceptual layout for the pier and access road, and undertake design through 100% design and bid documents, as well as coordinate with UNE's consultant Site Design Associates for permitting of the proposed facility.

The proposed facility includes the following:

1. A pile supported pier structure extending from shore into the Saco River. The proposed pier includes an approximately 130-foot-long approach section extending from shore and an 80-foot long pier head section oriented roughly parallel to the direction of flow in the river. The pier consists of a concrete superstructure on steel pipe piles, with timber fender piles for vessel berthing and floating docks, and a pile supported gangway lifting beam to allow the gangway ramp to be temporarily removed from the water.

2. A floating dock system consisting of one 8-foot by 24-foot float, one 8-foot by 26-foot 10-inch float, and one 12-foot by 30-foot gangway landing float to provide all-tide vessel access for UNE's vessels on the west side of the pier, and a single 6-foot by 20-foot floating dock to provide a tie-up location for the City of Biddeford Fire Boat on the east side of the pier.
3. An 80-foot by 5-foot gangway to provide ADA compliant access to the float system.
4. An upland access road connecting the existing road at the MSC to the proposed pier, including associated site grading, drainage, and stormwater management features.

2. Methodology

Technical Release No. 22 (TR20) was used to calculate the existing and developed runoff from the project area. Hydrographs have been generated for the 2, 10, and 25-year frequency design storm events utilizing the NRCS Type III storm distribution and the 24-hour regional data from York County's rainfall data as required by MaineDEP. The rainfall amounts for York County are listed below:

Table 1-Existing
24 Hour Rainfall Frequency

Rainfall amounts in Inches			
Design Storm	***2-Year***	***10-Year***	***25-Year***
	3.21	4.83	6.11

The following guidelines were utilized in the design of the site's stormwater measures and BMPs (MaineDEP Stormwater Guidelines, Chapter 500):

1. Waiver of the flooding standard. A project is eligible for a waiver from the flooding standard it discharges to a coastal wetland, a great pond, or a major river segment. A waiver is available for a project in the watershed of a coastal wetland, a great pod, or a major river segment provide the applicant demonstrates that the project convey stormwater exclusively in sheet flow, in a manmade open channel or in a piped system directly into one of these resources.
2. The redistribution of stormwater discharges standard will be met by discharging to a level spreader. The peak stormwater flow rate to a level spreader due to runoff from a 10-year, 24-hours storm must be less that 0.25 cubic feet per second (0.25 cfs) per foot length of level spreader.
3. Project will meet the erosion and sedimentation control standards found in Maine Department of Environmental Protection Guidelines, Chapter 500, Appendix A.

3. Pre-Development Conditions

1. Land Use

   Presently, the site is the location of the University of New England Girard Marine Science Center. However, the existing buildings and parking lots exist outside of the limits of this project. Runoff generated from the buildings and parking lots in conveyed via underground pipes to the south, away from the Saco River.

   The proposed project limits currently consists of predominately wooded areas. The southeast corner of the site contains gravel path.

2. Topography

   The site is mainly comprised of steeply sloped wooded areas with slopes near 20% for most of the site. The site mostly slopes to the north towards the Saco River/Atlantic Ocean. Per the NRCS WebSoil Survey, the site is comprised almost completely of sandy, stony soil. These sandy soils are rated as Hydrologic Group D. A copy of the Web Soil Survey can be found in the Appendices.

3. Existing Drainage Area

   Presently, the runoff from the site flows via overland flow to three different points of analysis, hereafter known as DP1, DP2 and DP3, with associated drainage areas 1S, 2S and 3S, respectively. The predevelopment drainage areas are described below:

   A map entitled Pre-Development Drainage Plan is included in the Appendix of this report. Additionally, the HydroCAD model and calculations can also be found in the Appendix.

   Predevelopment Area 1S is the smallest of the existing drainage areas and is ±0.460 acres which all consists of wooded areas. Runoff from Predevelopment Area 1S flows via overland flow from the rear of the Girard Marine Science Center to the northeast and directly into the Saco River/Atlantic Ocean at DP1.

   Predevelopment Area 2S is ±0.637 acres and can be found in the middle of the site. Predevelopment Area 2S consists of all wooded areas. Runoff from Predevelopment Area 2S flows via overland flow from a ledge in the middle of the site to the north to the Saco River/Atlantic Ocean at DP2.

Predevelopment Area 3S is ±1.461 acres and comprises the eastern most portion of the site. Predevelopment Areas 3S consists mostly of wooded areas and contains a gravel path leading to the lower lying wetlands and sand beaches along the Saco River/Atlantic Ocean. Runoff from Predevelopment Area 3S from the paved walkway at the Girard Marine Science Center to the northeast to the Saco River/Atlantic Ocean at DP3.

Tables 2A, 2B and 2C below list the total runoff for each Predevelopment Area:

Table 2A-Predevelopment Area 1S Runoff Rainfall amounts in cubic feet per second				
Rainfall amounts in Inches				
Pre-Development Total	***2-Year***	***10-Year***	***25-Year***	***100-Year***
	0.71	1.44	2.07	3.31

Table 2B-Predevelopment Area 2S Runoff Rainfall amounts in cubic feet per second				
Rainfall amounts in Inches				
Pre-Development Total	***2-Year***	***10-Year***	***25-Year***	***100-Year***
	0.74	1.51	2.17	3.50

Table 2C-Predevelopment Area 3S Runoff Rainfall amounts in cubic feet per second				
Rainfall amounts in Inches				
Pre-Development Total	***2-Year***	***10-Year***	***25-Year***	***100-Year***
	2.39	4.58	6.44	10.05

4. Post Development Conditions

1. Land Use

   When fully developed, the site will contain the following improvements:

   a. A pile supported pier structure extending from shore into the Saco River. The proposed pier includes an approximately 130-foot-long approach section extending from shore and an 80-foot long pier head section oriented roughly parallel to the direction of flow in the river. The pier consists of a concrete superstructure on steel pipe piles, with timber fender piles for vessel berthing and floating docks, and a pile supported gangway lifting beam to allow the gangway ramp to be temporarily removed from the water.
   b. A floating dock system consisting of one 8-foot by 24-foot float, one 8-foot by 26-foot 10-inch float, and one 12-foot by 30-foot gangway landing float to provide all-tide vessel access for UNE's vessels on the west side of the pier, and a single 6-foot by 20-foot floating dock to provide a tie-up location for the City of Biddeford Fire Boat on the east side of the pier.
   c. An 80-foot by 5-foot gangway to provide ADA compliant access to the float system.
   d. An upland superelevated access road connecting the existing road at the MSC to the proposed pier, including associated site grading, drainage, and stormwater management features.

   These improvements will result in a total increase in impervious of 0.249 acres. The increase in impervious area will be managed by the two bioretention filter cells to the north of the Girard Marine Science Center. Runoff will be conveyed to the bioretention filter cells via proposed vegetated swales along the low side of the superelevated access road.

   The bioretention filter cells will slowly release captured stormwater via underground pipe into the Saco River/Atlantic Ocean.

2. Drainage Areas

   The map entitled Post-Development Drainage Plan delineating all developed drainage areas can be found in the Appendix. For analysis, the site was broken up into 5 different drainage areas hereafter known as 1S, 2S, 3S, 4S, and 5S.

Post Development Area 1S contains the area that conveys runoff to the western Bioretention Filter Cell B. This area contains impervious areas from the access road and the proposed vegetated areas behind the Girard Marine Science Center. Runoff is conveyed to the Bioretention Filter Cell B via vegetated swale. Runoff captured by the bioretention filter cell will be treated and slowly released via underground pipe to the outfall under the proposed pier and into the Saco River/Atlantic Ocean near DP1.

Post Development Area 2S contains the areas to the northwest of the site that conveys runoff via over land flow from the Girard Marine Science Center to DP1. This area contains small impervious areas as it contains the northern shoulder of the access road and the transition from access road to pier. Runoff from this area will not be managed for water quality or peak rate reduction.

Post Development Area 3S contains the area that conveys runoff to the eastern Bioretention Filter Cell A. This area contains impervious area from the access road and the proposed vegetated areas behind and to the east of the Girard Marine Science Center. Runoff is conveyed to the Bioretention Filter Cell A via vegetated swale. Runoff captured by the bioretention filter cell will be treated and slowly released via underground pipe to the outfall to the north where it will run through a level spreader to further reduce peak flow rate. Runoff will leave the level spreader and reach the Saco River/Atlantic Ocean via overland flow near DP2.

Post Development Area 4S contains the area to the northeast of the site that conveys runoff via over land flow from the Girard Marine Science Center to DP2. This area contains small impervious areas as it contains the northern shoulder of the access road and the level spreader. Runoff from this area will not be managed for water quality or peak rate reduction.

Post Development Drainage Area 5S contains the area to the eastern portion of the site. This this area contains the southernmost portion of the proposed access road and the existing gravel path. Runoff from this area will be conveyed via overland flow to the Saco River/Atlantic Ocean at DP3.

5. Stormwater Management

1. Stormwater Quantity

   The bioretention filter cells are proposed to reduce the peak runoff rate of the 2, 10, and 25-year storms and to treat stormwater runoff from the site in accordance with DEP standards. Since runoff from this development outlets directly to a tidal portion of a major river segment, the flooding standards can be waived by DEP, and typically are waived by the city for projects on this parcel. Despite this, efforts were made to minimize the peak runoff rate from the site. The tables below summarize the peak rate of runoff for the site:

TABLE No. 3A

Managed Total Peak Discharge Summary of the Proposed Conditions to Discharge Point DP1

Storm Event	2-Year		10-Year		25-Year		100-Year	
	Existing	**Proposed**	**Existing**	**Proposed**	**Existing**	**Proposed**	**Existing**	**Proposed**
Peak Runoff Rate (cfs)	0.71	1.02	1.44	1.85	2.07	2.54	3.31	3.88

TABLE No. 3B

Managed Total Peak Discharge Summary of the Proposed Conditions to Discharge Point DP2

Storm Event	2-Year		10-Year		25-Year		100-Year	
	Existing	**Proposed**	**Existing**	**Proposed**	**Existing**	**Proposed**	**Existing**	**Proposed**
Peak Runoff Rate (cfs)	0.74	1.24	1.51	2.31	2.17	3.22	3.50	4.98

TABLE No. 3C

Managed Total Peak Discharge Summary of the Proposed Conditions to Discharge Point DP3

Storm Event	2-Year		10-Year		25-Year		100-Year	
	Existing	**Proposed**	**Existing**	**Proposed**	**Existing**	**Proposed**	**Existing**	**Proposed**
Peak Runoff Rate (cfs)	2.39	2.23	4.58	4.26	6.44	5.99	10.05	9.35

The tables above show a relatively minor increase in the peak rate of stormwater runoff subsequent to development. The northern most outfall will discharge to a level spreader which will create sheet flow into the Saco River/Atlantic Ocean. The western most outfall will outlet through the pier concrete abutment. Because the area downgradient of the outlets is stable rock, there will be no impacts due to the minor

increase in runoff. The reality is that stormwater runoff from each of the subcatchments adjacent to the river is not a total point discharge in either the existing or proposed conditions, and is dispersed over the entire frontage along the river.

Since this development outlets directly to a major river segment/ocean, the flooding standard is typically waived by DEP (Chapter 500-Section F.3.a). The city also typically waives the need to provide detention of stormwater runoff from this parcel of UNE's property due to the tidal nature of the receiving waters. A waiver has been requested.

2. Stormwater Quality

The project proposes to treat 76% of impervious development and 72% of all new development. As discussed in the preapplication meeting, the proposed development will be treated as a linear portion of the project. For a linear project, the minimum treatment level required is 70% for impervious development and 50% of all new development. Water Quality treatment level are found in the tables below.

TABLE No. 4

Water Quality Treatment Level

Subcatchment Area	Impervious Area (SF)	Landscaped Area (SF)	Developed Area (SF)	Filter Area Required (SF)	Filter Area Provided (SF)	Water Quality Volume Required (CF)	Water Quality Volume Provided (CF)	Sediment Forebay Volume Required (CF)	Sediment Forebay Volume Provided (CF)	BMP
1S	4,917	4,915	9,832	344	854	574	200			Bioretention Filter
2S	1,238	10,250	11,488	267	-	445	-			-
3S	4,476	8,889	13,365	402	565	669	380	144	115	Bioretention Filter
4S	295	17,234	17,529	359	-	599	-			-
5S	6,273	52,906	59,179	1,372	-	2,286	-			-
Total Treated	**13,071**	**13,804**	**80,203**	930	-	1,549				
Total Developed Impervious Area	**17,199**									
Total Developed Area	**111,393**									
Percent Developed Area Treated	**72%**									
Percent Developed Impervious Area Treated	**76%**									

3. Erosion and Sedimentation Control

BMP's such as stabilized construction entrance, silt fence and/or filter berms of erosion control mix, riprap pipe inlet and outlet protection, turf reinforcement matting, mulch and permanent seeding will be used to prevent erosion and downstream migration of sediment during construction. The locations of temporary and permanent erosion control measures are erosion and sedimentation control notes

and details are shown on the design drawing set.

4. Inspection and Maintenance

   The University of New England will be responsible for maintaining the stormwater facilities for the project. An Inspection and Maintenance Plan is included in the Appendix. The plan includes a draft of the Stormwater Drainage System Maintenance Agreement, to be finalized and recorded as a condition of approval.

6. Conclusions

The stormwater management for this project included a variety of BMPs to control both the quantity and quality of stormwater runoff. The HydroCAD calculations show a minimal increase in the stormwater runoff from the proposed site however the Stormwater Quantity requirement can be waved since this development discharges directly to a major river segment/ocean, the flooding standards can be waived (Chapter 500-Section F.3.a).

Stormwater treatment BMPs have been designed to treat stormwater runoff from more than 70% of the developed impervious area with additional treatment credit from the implementation of Low Impact Development Measures. Based on the information provided, no adverse impacts to downstream receiving bodies are anticipated.

Appendix A

NRCS Web Soil Survey Report

United States Department of Agriculture

NRCS

Natural Resources Conservation Service

A product of the National Cooperative Soil Survey, a joint effort of the United States Department of Agriculture and other Federal agencies, State agencies including the Agricultural Experiment Stations, and local participants

Custom Soil Resource Report for York County, Maine



Preface

Soil surveys contain information that affects land use planning in survey areas. They highlight soil limitations that affect various land uses and provide information about the properties of the soils in the survey areas. Soil surveys are designed for many different users, including farmers, ranchers, foresters, agronomists, urban planners, community officials, engineers, developers, builders, and home buyers. Also, conservationists, teachers, students, and specialists in recreation, waste disposal, and pollution control can use the surveys to help them understand, protect, or enhance the environment.

Various land use regulations of Federal, State, and local governments may impose special restrictions on land use or land treatment. Soil surveys identify soil properties that are used in making various land use or land treatment decisions. The information is intended to help the land users identify and reduce the effects of soil limitations on various land uses. The landowner or user is responsible for identifying and complying with existing laws and regulations.

Although soil survey information can be used for general farm, local, and wider area planning, onsite investigation is needed to supplement this information in some cases. Examples include soil quality assessments (http://www.nrcs.usda.gov/wps/portal/nrcs/main/soils/health/) and certain conservation and engineering applications. For more detailed information, contact your local USDA Service Center (https://offices.sc.egov.usda.gov/locator/app?agency=nrcs) or your NRCS State Soil Scientist (http://www.nrcs.usda.gov/wps/portal/nrcs/detail/soils/contactus/?cid=nrcs142p2_053951).

Great differences in soil properties can occur within short distances. Some soils are seasonally wet or subject to flooding. Some are too unstable to be used as a foundation for buildings or roads. Clayey or wet soils are poorly suited to use as septic tank absorption fields. A high water table makes a soil poorly suited to basements or underground installations.

The National Cooperative Soil Survey is a joint effort of the United States Department of Agriculture and other Federal agencies, State agencies including the Agricultural Experiment Stations, and local agencies. The Natural Resources Conservation Service (NRCS) has leadership for the Federal part of the National Cooperative Soil Survey.

Information about soils is updated periodically. Updated information is available through the NRCS Web Soil Survey, the site for official soil survey information.

The U.S. Department of Agriculture (USDA) prohibits discrimination in all its programs and activities on the basis of race, color, national origin, age, disability, and where applicable, sex, marital status, familial status, parental status, religion, sexual orientation, genetic information, political beliefs, reprisal, or because all or a part of an individual's income is derived from any public assistance program. (Not all prohibited bases apply to all programs.) Persons with disabilities who require

alternative means for communication of program information (Braille, large print, audiotape, etc.) should contact USDA's TARGET Center at (202) 720-2600 (voice and TDD). To file a complaint of discrimination, write to USDA, Director, Office of Civil Rights, 1400 Independence Avenue, S.W., Washington, D.C. 20250-9410 or call (800) 795-3272 (voice) or (202) 720-6382 (TDD). USDA is an equal opportunity provider and employer.

Contents

Preface.....2
How Soil Surveys Are Made.....5
Soil Map.....8
Soil Map.....9
Legend.....10
Map Unit Legend.....11
Map Unit Descriptions.....11
York County, Maine.....13
Ba—Beaches, sand.....13
LyC—Lyman-Rock outcrop complex, 8 to 15 percent slopes.....13
LyE—Lyman-Rock outcrop complex, 15 to 80 percent slopes.....15
UH—Urban land-Hooksan complex, 0 to 8 percent slopes.....17
W—Water bodies.....18

How Soil Surveys Are Made

Soil surveys are made to provide information about the soils and miscellaneous areas in a specific area. They include a description of the soils and miscellaneous areas and their location on the landscape and tables that show soil properties and limitations affecting various uses. Soil scientists observed the steepness, length, and shape of the slopes; the general pattern of drainage; the kinds of crops and native plants; and the kinds of bedrock. They observed and described many soil profiles. A soil profile is the sequence of natural layers, or horizons, in a soil. The profile extends from the surface down into the unconsolidated material in which the soil formed or from the surface down to bedrock. The unconsolidated material is devoid of roots and other living organisms and has not been changed by other biological activity.

Currently, soils are mapped according to the boundaries of major land resource areas (MLRAs). MLRAs are geographically associated land resource units that share common characteristics related to physiography, geology, climate, water resources, soils, biological resources, and land uses (USDA, 2006). Soil survey areas typically consist of parts of one or more MLRA.

The soils and miscellaneous areas in a survey area occur in an orderly pattern that is related to the geology, landforms, relief, climate, and natural vegetation of the area. Each kind of soil and miscellaneous area is associated with a particular kind of landform or with a segment of the landform. By observing the soils and miscellaneous areas in the survey area and relating their position to specific segments of the landform, a soil scientist develops a concept, or model, of how they were formed. Thus, during mapping, this model enables the soil scientist to predict with a considerable degree of accuracy the kind of soil or miscellaneous area at a specific location on the landscape.

Commonly, individual soils on the landscape merge into one another as their characteristics gradually change. To construct an accurate soil map, however, soil scientists must determine the boundaries between the soils. They can observe only a limited number of soil profiles. Nevertheless, these observations, supplemented by an understanding of the soil-vegetation-landscape relationship, are sufficient to verify predictions of the kinds of soil in an area and to determine the boundaries.

Soil scientists recorded the characteristics of the soil profiles that they studied. They noted soil color, texture, size and shape of soil aggregates, kind and amount of rock fragments, distribution of plant roots, reaction, and other features that enable them to identify soils. After describing the soils in the survey area and determining their properties, the soil scientists assigned the soils to taxonomic classes (units). Taxonomic classes are concepts. Each taxonomic class has a set of soil characteristics with precisely defined limits. The classes are used as a basis for comparison to classify soils systematically. Soil taxonomy, the system of taxonomic classification used in the United States, is based mainly on the kind and character of soil properties and the arrangement of horizons within the profile. After the soil

scientists classified and named the soils in the survey area, they compared the individual soils with similar soils in the same taxonomic class in other areas so that they could confirm data and assemble additional data based on experience and research.

The objective of soil mapping is not to delineate pure map unit components; the objective is to separate the landscape into landforms or landform segments that have similar use and management requirements. Each map unit is defined by a unique combination of soil components and/or miscellaneous areas in predictable proportions. Some components may be highly contrasting to the other components of the map unit. The presence of minor components in a map unit in no way diminishes the usefulness or accuracy of the data. The delineation of such landforms and landform segments on the map provides sufficient information for the development of resource plans. If intensive use of small areas is planned, onsite investigation is needed to define and locate the soils and miscellaneous areas.

Soil scientists make many field observations in the process of producing a soil map. The frequency of observation is dependent upon several factors, including scale of mapping, intensity of mapping, design of map units, complexity of the landscape, and experience of the soil scientist. Observations are made to test and refine the soil-landscape model and predictions and to verify the classification of the soils at specific locations. Once the soil-landscape model is refined, a significantly smaller number of measurements of individual soil properties are made and recorded. These measurements may include field measurements, such as those for color, depth to bedrock, and texture, and laboratory measurements, such as those for content of sand, silt, clay, salt, and other components. Properties of each soil typically vary from one point to another across the landscape.

Observations for map unit components are aggregated to develop ranges of characteristics for the components. The aggregated values are presented. Direct measurements do not exist for every property presented for every map unit component. Values for some properties are estimated from combinations of other properties.

While a soil survey is in progress, samples of some of the soils in the area generally are collected for laboratory analyses and for engineering tests. Soil scientists interpret the data from these analyses and tests as well as the field-observed characteristics and the soil properties to determine the expected behavior of the soils under different uses. Interpretations for all of the soils are field tested through observation of the soils in different uses and under different levels of management. Some interpretations are modified to fit local conditions, and some new interpretations are developed to meet local needs. Data are assembled from other sources, such as research information, production records, and field experience of specialists. For example, data on crop yields under defined levels of management are assembled from farm records and from field or plot experiments on the same kinds of soil.

Predictions about soil behavior are based not only on soil properties but also on such variables as climate and biological activity. Soil conditions are predictable over long periods of time, but they are not predictable from year to year. For example, soil scientists can predict with a fairly high degree of accuracy that a given soil will have a high water table within certain depths in most years, but they cannot predict that a high water table will always be at a specific level in the soil on a specific date.

After soil scientists located and identified the significant natural bodies of soil in the survey area, they drew the boundaries of these bodies on aerial photographs and

identified each as a specific map unit. Aerial photographs show trees, buildings, fields, roads, and rivers, all of which help in locating boundaries accurately.

Soil Map

The soil map section includes the soil map for the defined area of interest, a list of soil map units on the map and extent of each map unit, and cartographic symbols displayed on the map. Also presented are various metadata about data used to produce the map, and a description of each soil map unit.



Map Scale: 1:1,520 if printed on A landscape (11" x 8.5") sheet.

N

Meters
0 20 40 80 120

Feet
0 50 100 200 300

Map projection: Web Mercator Corner coordinates: WGS84 Edge tics: UTM Zone 19N WGS84

MAP LEGEND

Area of Interest (AOI)
- Area of Interest (AOI)

Soils
- Soil Map Unit Polygons
- Soil Map Unit Lines
- Soil Map Unit Points

Special Point Features
- Blowout
- Borrow Pit
- Clay Spot
- Closed Depression
- Gravel Pit
- Gravelly Spot
- Landfill
- Lava Flow
- Marsh or swamp
- Mine or Quarry
- Miscellaneous Water
- Perennial Water
- Rock Outcrop
- Saline Spot
- Sandy Spot
- Severely Eroded Spot
- Sinkhole
- Slide or Slip
- Sodic Spot
- Spoil Area
- Stony Spot
- Very Stony Spot
- Wet Spot
- Other
- Special Line Features

Water Features
- Streams and Canals

Transportation
- Rails
- Interstate Highways
- US Routes
- Major Roads
- Local Roads

Background
- Aerial Photography

MAP INFORMATION

The soil surveys that comprise your AOI were mapped at 1:20,000.

Warning: Soil Map may not be valid at this scale.

Enlargement of maps beyond the scale of mapping can cause misunderstanding of the detail of mapping and accuracy of soil line placement. The maps do not show the small areas of contrasting soils that could have been shown at a more detailed scale.

Please rely on the bar scale on each map sheet for map measurements.

Source of Map: Natural Resources Conservation Service
Web Soil Survey URL:
Coordinate System: Web Mercator (EPSG:3857)

Maps from the Web Soil Survey are based on the Web Mercator projection, which preserves direction and shape but distorts distance and area. A projection that preserves area, such as the Albers equal-area conic projection, should be used if more accurate calculations of distance or area are required.

This product is generated from the USDA-NRCS certified data as of the version date(s) listed below.

Soil Survey Area: York County, Maine
Survey Area Data: Version 21, Aug 30, 2022

Soil map units are labeled (as space allows) for map scales 1:50,000 or larger.

Date(s) aerial images were photographed: Jun 19, 2020—Sep 20, 2020

The orthophoto or other base map on which the soil lines were compiled and digitized probably differs from the background imagery displayed on these maps. As a result, some minor shifting of map unit boundaries may be evident.

Map Unit Legend

Map Unit Symbol	Map Unit Name	Acres in AOI	Percent of AOI
Ba	Beaches, sand	0.3	5.5%
LyC	Lyman-Rock outcrop complex, 8 to 15 percent slopes	1.7	27.7%
LyE	Lyman-Rock outcrop complex, 15 to 80 percent slopes	3.3	54.8%
UH	Urban land-Hooksan complex, 0 to 8 percent slopes	0.2	3.1%
W	Water bodies	0.5	8.9%
Totals for Area of Interest		**6.1**	**100.0%**

Map Unit Descriptions

The map units delineated on the detailed soil maps in a soil survey represent the soils or miscellaneous areas in the survey area. The map unit descriptions, along with the maps, can be used to determine the composition and properties of a unit.

A map unit delineation on a soil map represents an area dominated by one or more major kinds of soil or miscellaneous areas. A map unit is identified and named according to the taxonomic classification of the dominant soils. Within a taxonomic class there are precisely defined limits for the properties of the soils. On the landscape, however, the soils are natural phenomena, and they have the characteristic variability of all natural phenomena. Thus, the range of some observed properties may extend beyond the limits defined for a taxonomic class. Areas of soils of a single taxonomic class rarely, if ever, can be mapped without including areas of other taxonomic classes. Consequently, every map unit is made up of the soils or miscellaneous areas for which it is named and some minor components that belong to taxonomic classes other than those of the major soils.

Most minor soils have properties similar to those of the dominant soil or soils in the map unit, and thus they do not affect use and management. These are called noncontrasting, or similar, components. They may or may not be mentioned in a particular map unit description. Other minor components, however, have properties and behavioral characteristics divergent enough to affect use or to require different management. These are called contrasting, or dissimilar, components. They generally are in small areas and could not be mapped separately because of the scale used. Some small areas of strongly contrasting soils or miscellaneous areas are identified by a special symbol on the maps. If included in the database for a given area, the contrasting minor components are identified in the map unit descriptions along with some characteristics of each. A few areas of minor components may not have been observed, and consequently they are not mentioned in the descriptions, especially where the pattern was so complex that it was impractical to make enough observations to identify all the soils and miscellaneous areas on the landscape.

The presence of minor components in a map unit in no way diminishes the usefulness or accuracy of the data. The objective of mapping is not to delineate pure taxonomic classes but rather to separate the landscape into landforms or landform segments that have similar use and management requirements. The delineation of such segments on the map provides sufficient information for the development of resource plans. If intensive use of small areas is planned, however, onsite investigation is needed to define and locate the soils and miscellaneous areas.

An identifying symbol precedes the map unit name in the map unit descriptions. Each description includes general facts about the unit and gives important soil properties and qualities.

Soils that have profiles that are almost alike make up a *soil series*. Except for differences in texture of the surface layer, all the soils of a series have major horizons that are similar in composition, thickness, and arrangement.

Soils of one series can differ in texture of the surface layer, slope, stoniness, salinity, degree of erosion, and other characteristics that affect their use. On the basis of such differences, a soil series is divided into *soil phases*. Most of the areas shown on the detailed soil maps are phases of soil series. The name of a soil phase commonly indicates a feature that affects use or management. For example, Alpha silt loam, 0 to 2 percent slopes, is a phase of the Alpha series.

Some map units are made up of two or more major soils or miscellaneous areas. These map units are complexes, associations, or undifferentiated groups.

A *complex* consists of two or more soils or miscellaneous areas in such an intricate pattern or in such small areas that they cannot be shown separately on the maps. The pattern and proportion of the soils or miscellaneous areas are somewhat similar in all areas. Alpha-Beta complex, 0 to 6 percent slopes, is an example.

An *association* is made up of two or more geographically associated soils or miscellaneous areas that are shown as one unit on the maps. Because of present or anticipated uses of the map units in the survey area, it was not considered practical or necessary to map the soils or miscellaneous areas separately. The pattern and relative proportion of the soils or miscellaneous areas are somewhat similar. Alpha-Beta association, 0 to 2 percent slopes, is an example.

An *undifferentiated group* is made up of two or more soils or miscellaneous areas that could be mapped individually but are mapped as one unit because similar interpretations can be made for use and management. The pattern and proportion of the soils or miscellaneous areas in a mapped area are not uniform. An area can be made up of only one of the major soils or miscellaneous areas, or it can be made up of all of them. Alpha and Beta soils, 0 to 2 percent slopes, is an example.

Some surveys include *miscellaneous areas*. Such areas have little or no soil material and support little or no vegetation. Rock outcrop is an example.

York County, Maine

Ba—Beaches, sand

Map Unit Setting

National map unit symbol: 2y080
Elevation: 0 to 20 feet
Mean annual precipitation: 36 to 71 inches
Mean annual air temperature: 39 to 55 degrees F
Frost-free period: 145 to 240 days
Farmland classification: Not prime farmland

Map Unit Composition

Beaches, sandy surface: 90 percent
Estimates are based on observations, descriptions, and transects of the mapunit.

Description of Beaches, Sandy Surface

Setting

Landform: Back-barrier beaches, barrier beaches, beaches, shores
Landform position (two-dimensional): Footslope
Landform position (three-dimensional): Riser
Down-slope shape: Convex
Across-slope shape: Linear
Parent material: Beach sand

Typical profile

C1 - 0 to 10 inches: sand

Properties and qualities

Slope: 0 to 8 percent
Runoff class: Negligible
Capacity of the most limiting layer to transmit water (Ksat): Moderately high to very high (1.42 to 99.90 in/hr)
Depth to water table: About 0 to 12 inches
Frequency of flooding: Very frequent
Maximum salinity: Moderately saline to strongly saline (8.0 to 16.0 mmhos/cm)
Available water supply, 0 to 60 inches: Very low (about 0.5 inches)

Interpretive groups

Land capability classification (irrigated): None specified
Land capability classification (nonirrigated): 8
Hydric soil rating: Unranked

LyC—Lyman-Rock outcrop complex, 8 to 15 percent slopes

Map Unit Setting

National map unit symbol: 2trqj
Elevation: 0 to 790 feet
Mean annual precipitation: 36 to 65 inches
Mean annual air temperature: 36 to 52 degrees F

Frost-free period: 60 to 160 days
Farmland classification: Not prime farmland

Map Unit Composition

Lyman, very stony, and similar soils: 62 percent
Rock outcrop: 25 percent
Estimates are based on observations, descriptions, and transects of the mapunit.

Description of Lyman, Very Stony

Setting

Landform: Hills, mountains
Landform position (two-dimensional): Summit, shoulder, backslope
Landform position (three-dimensional): Mountaintop, mountainbase, side slope, crest
Down-slope shape: Convex
Across-slope shape: Convex
Parent material: Loamy supraglacial till derived from granite and gneiss and/or loamy supraglacial till derived from phyllite and/or loamy supraglacial till derived from mica schist

Typical profile

Oe - 0 to 1 inches: moderately decomposed plant material
A - 1 to 3 inches: loam
E - 3 to 5 inches: fine sandy loam
Bhs - 5 to 7 inches: loam
Bs1 - 7 to 11 inches: loam
Bs2 - 11 to 18 inches: channery loam
R - 18 to 28 inches: bedrock

Properties and qualities

Slope: 8 to 15 percent
Surface area covered with cobbles, stones or boulders: 1.5 percent
Depth to restrictive feature: 11 to 24 inches to lithic bedrock
Drainage class: Somewhat excessively drained
Capacity of the most limiting layer to transmit water (Ksat): Very low to high (0.00 to 14.03 in/hr)
Depth to water table: More than 80 inches
Frequency of flooding: None
Frequency of ponding: None
Available water supply, 0 to 60 inches: Low (about 3.4 inches)

Interpretive groups

Land capability classification (irrigated): None specified
Land capability classification (nonirrigated): 6s
Hydrologic Soil Group: D
Ecological site: F144BY701ME - Shallow Till
Hydric soil rating: No

Description of Rock Outcrop

Setting

Landform: Hills, mountains
Landform position (two-dimensional): Summit, shoulder, backslope
Landform position (three-dimensional): Mountaintop, mountainbase, side slope, crest
Down-slope shape: Convex

Across-slope shape: Convex
Parent material: Igneous and metamorphic rock

Typical profile
R - 0 to 10 inches: bedrock

Properties and qualities
Slope: 8 to 15 percent
Depth to restrictive feature: 0 inches to lithic bedrock
Capacity of the most limiting layer to transmit water (Ksat): Very low to very high (0.00 to 14.17 in/hr)

Interpretive groups
Land capability classification (irrigated): None specified
Land capability classification (nonirrigated): 8s
Ecological site: F144BY801ME - Rockland (reserved)
Hydric soil rating: Unranked

LyE—Lyman-Rock outcrop complex, 15 to 80 percent slopes

Map Unit Setting
National map unit symbol: 2trqp
Elevation: 0 to 980 feet
Mean annual precipitation: 36 to 65 inches
Mean annual air temperature: 36 to 52 degrees F
Frost-free period: 60 to 160 days
Farmland classification: Not prime farmland

Map Unit Composition
Lyman, very stony, and similar soils: 60 percent
Rock outcrop: 30 percent
Estimates are based on observations, descriptions, and transects of the mapunit.

Description of Lyman, Very Stony

Setting
Landform: Hills, mountains
Landform position (two-dimensional): Summit, shoulder, backslope
Landform position (three-dimensional): Mountaintop, mountainflank, side slope, crest
Down-slope shape: Convex
Across-slope shape: Convex
Parent material: Loamy supraglacial till derived from granite and gneiss and/or loamy supraglacial till derived from phyllite and/or loamy supraglacial till derived from mica schist

Typical profile
Oe - 0 to 1 inches: moderately decomposed plant material
A - 1 to 3 inches: loam
E - 3 to 5 inches: fine sandy loam
Bhs - 5 to 7 inches: loam

Bs1 - 7 to 11 inches: loam
Bs2 - 11 to 18 inches: channery loam
R - 18 to 28 inches: bedrock

Properties and qualities

Slope: 15 to 80 percent
Surface area covered with cobbles, stones or boulders: 1.5 percent
Depth to restrictive feature: 11 to 24 inches to lithic bedrock
Drainage class: Somewhat excessively drained
Capacity of the most limiting layer to transmit water (Ksat): Very low to high (0.00 to 14.03 in/hr)
Depth to water table: More than 80 inches
Frequency of flooding: None
Frequency of ponding: None
Available water supply, 0 to 60 inches: Low (about 3.4 inches)

Interpretive groups

Land capability classification (irrigated): None specified
Land capability classification (nonirrigated): 7s
Hydrologic Soil Group: D
Ecological site: F144BY701ME - Shallow Till
Hydric soil rating: No

Description of Rock Outcrop

Setting

Landform: Hills, mountains
Landform position (two-dimensional): Summit, shoulder, backslope
Landform position (three-dimensional): Mountaintop, mountainflank, side slope, crest, free face
Down-slope shape: Convex
Across-slope shape: Convex
Parent material: Igneous and metamorphic rock

Typical profile

R - 0 to 10 inches: bedrock

Properties and qualities

Slope: 15 to 80 percent
Depth to restrictive feature: 0 inches to lithic bedrock
Capacity of the most limiting layer to transmit water (Ksat): Very low to very high (0.00 to 14.17 in/hr)

Interpretive groups

Land capability classification (irrigated): None specified
Land capability classification (nonirrigated): 8s
Ecological site: F144BY801ME - Rockland (reserved)
Hydric soil rating: Unranked

UH—Urban land-Hooksan complex, 0 to 8 percent slopes

Map Unit Setting

National map unit symbol: 2x1l1
Elevation: 0 to 50 feet
Mean annual precipitation: 36 to 71 inches
Mean annual air temperature: 39 to 55 degrees F
Frost-free period: 140 to 240 days
Farmland classification: Not prime farmland

Map Unit Composition

Urban land, coastal: 50 percent
Hooksan and similar soils: 30 percent
Estimates are based on observations, descriptions, and transects of the mapunit.

Description of Urban Land, Coastal

Setting

Landform: Dunes
Down-slope shape: Linear
Across-slope shape: Linear

Typical profile

M - 0 to 10 inches: cemented material

Properties and qualities

Slope: 0 to 8 percent
Depth to restrictive feature: 0 inches to manufactured layer
Runoff class: Very high
Capacity of the most limiting layer to transmit water (Ksat): Very low (0.00 to 0.00 in/hr)
Frequency of flooding: Rare
Available water supply, 0 to 60 inches: Very low (about 0.0 inches)

Interpretive groups

Land capability classification (irrigated): None specified
Land capability classification (nonirrigated): 8
Hydrologic Soil Group: D
Hydric soil rating: Unranked

Description of Hooksan

Setting

Landform: Dunes
Landform position (two-dimensional): Summit, shoulder, backslope, footslope
Landform position (three-dimensional): Side slope, base slope, crest
Down-slope shape: Convex
Across-slope shape: Convex, linear
Parent material: Sandy eolian deposits

Typical profile

C1 - 0 to 20 inches: sand
C2 - 20 to 30 inches: sand
C3 - 30 to 64 inches: sand

Properties and qualities

Slope: 0 to 8 percent
Depth to restrictive feature: More than 80 inches
Drainage class: Excessively drained
Runoff class: Negligible
Capacity of the most limiting layer to transmit water (Ksat): Very high (14.17 to 99.90 in/hr)
Depth to water table: More than 80 inches
Frequency of flooding: Rare
Frequency of ponding: None
Maximum salinity: Nonsaline (0.0 to 1.9 mmhos/cm)
Available water supply, 0 to 60 inches: Low (about 5.4 inches)

Interpretive groups

Land capability classification (irrigated): None specified
Land capability classification (nonirrigated): 7e
Hydrologic Soil Group: A
Ecological site: R149BY002MA - Coastal Dunes
Hydric soil rating: No

W—Water bodies

Map Unit Composition

Water: 100 percent
Estimates are based on observations, descriptions, and transects of the mapunit.

Description of Water

Setting

Landform: Hills

Appendix B

Pre Development HydroCAD Calculations

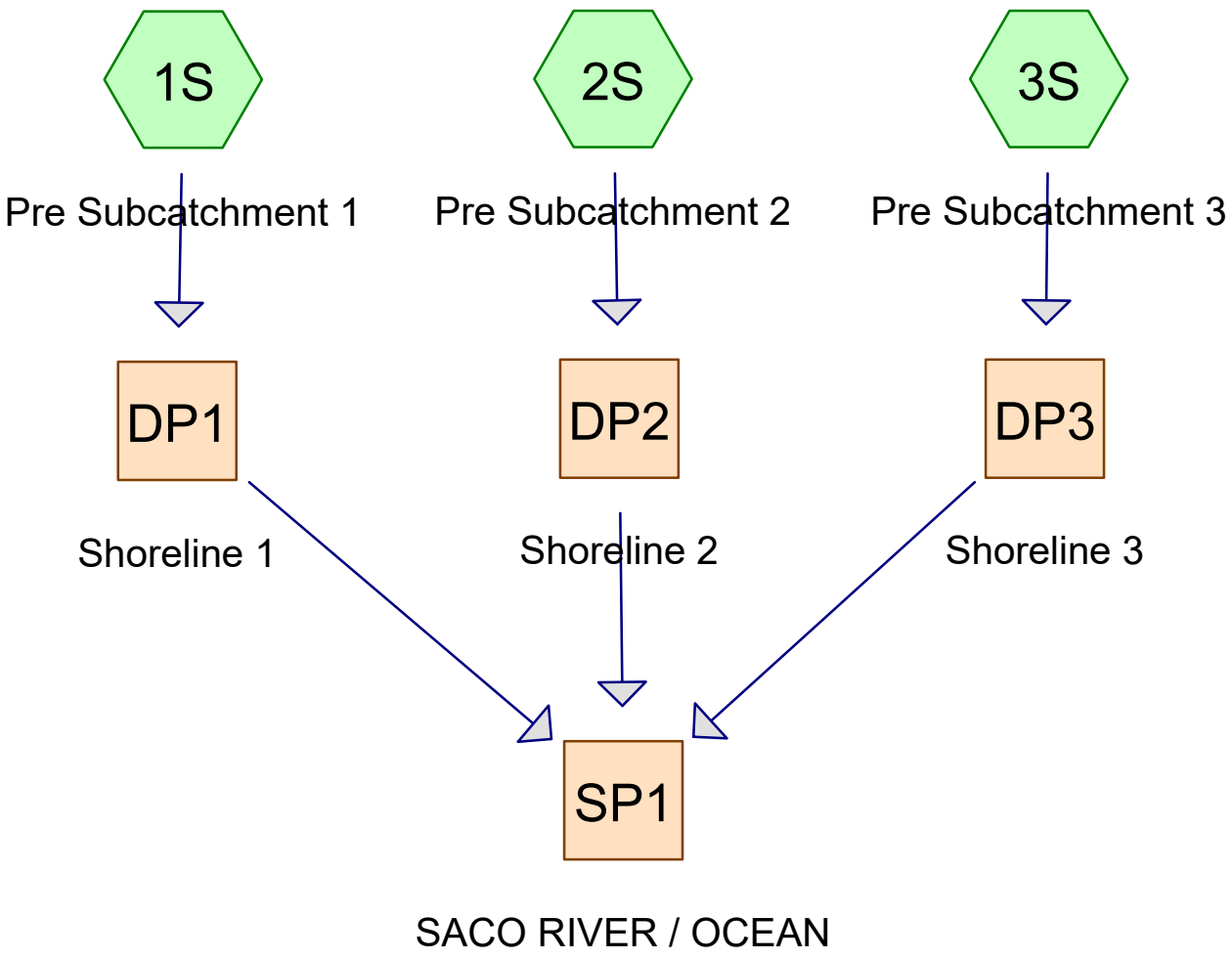

Subcat Reach Pond Link

Routing Diagram for UNE-PreDrainage
Prepared by GEI Consultants, Printed 7/9/2024
HydroCAD® 10.20-3c s/n 01250 © 2023 HydroCAD Software Solutions LLC

Project Notes

Defined 3 rainfall events from ME-York IDF

Rainfall Events Listing

Event#	Event Name	Storm Type	Curve	Mode	Duration (hours)	B/B	Depth (inches)	AMC
1	2-yr	Type III 24-hr		Default	24.00	1	3.30	2
2	10-yr	Type III 24-hr		Default	24.00	1	4.90	2
3	25-yr	Type III 24-hr		Default	24.00	1	6.20	2
4	100-yr	Type III 24-hr		Default	24.00	1	8.70	2

Area Listing (all nodes)

Area (acres)	CN	Description (subcatchment-numbers)
0.110	96	Gravel surface, HSG D (3S)
0.017	98	Roofs, HSG D (3S)
0.160	88	Sand Beach, HSG D (3S)
2.270	77	Woods, Good, HSG D (1S, 2S, 3S)
2.557	**79**	**TOTAL AREA**

Soil Listing (all nodes)

Area (acres)	Soil Group	Subcatchment Numbers
0.000	HSG A	
0.000	HSG B	
0.000	HSG C	
2.557	HSG D	1S, 2S, 3S
0.000	Other	
2.557		**TOTAL AREA**

Ground Covers (all nodes)

HSG-A (acres)	HSG-B (acres)	HSG-C (acres)	HSG-D (acres)	Other (acres)	Total (acres)	Ground Cover	Subcatchment Numbers
0.000	0.000	0.000	0.110	0.000	0.110	Gravel surface	3S
0.000	0.000	0.000	0.017	0.000	0.017	Roofs	3S
0.000	0.000	0.000	0.160	0.000	0.160	Sand Beach	3S
0.000	0.000	0.000	2.270	0.000	2.270	Woods, Good	1S, 2S, 3S
0.000	**0.000**	**0.000**	**2.557**	**0.000**	**2.557**	**TOTAL AREA**	

Time span=5.00-20.00 hrs, dt=0.05 hrs, 301 points
Runoff by SCS TR-20 method, UH=SCS, Weighted-CN
Reach routing by Stor-Ind+Trans method - Pond routing by Stor-Ind method

Subcatchment 1S: Pre Subcatchment 1 Runoff Area=20,023 sf 0.00% Impervious Runoff Depth>1.18"
Flow Length=138' Tc=4.0 min CN=77 Runoff=0.71 cfs 0.045 af

Subcatchment 2S: Pre Subcatchment 2 Runoff Area=27,744 sf 0.00% Impervious Runoff Depth>1.18"
Flow Length=198' Tc=12.7 min CN=77 Runoff=0.74 cfs 0.062 af

Subcatchment 3S: Pre Subcatchment 3 Runoff Area=63,622 sf 1.18% Impervious Runoff Depth>1.37"
Flow Length=445' Tc=7.0 min CN=80 Runoff=2.39 cfs 0.166 af

Reach DP1: Shoreline 1 Inflow=0.71 cfs 0.045 af
Outflow=0.71 cfs 0.045 af

Reach DP2: Shoreline 2 Inflow=0.74 cfs 0.062 af
Outflow=0.74 cfs 0.062 af

Reach DP3: Shoreline 3 Inflow=2.39 cfs 0.166 af
Outflow=2.39 cfs 0.166 af

Reach SP1: SACO RIVER / OCEAN Inflow=3.63 cfs 0.274 af
Outflow=3.63 cfs 0.274 af

Total Runoff Area = 2.557 ac Runoff Volume = 0.274 af Average Runoff Depth = 1.29"
99.33% Pervious = 2.540 ac 0.67% Impervious = 0.017 ac

Summary for Subcatchment 1S: Pre Subcatchment 1

Runoff = 0.71 cfs @ 12.07 hrs, Volume= 0.045 af, Depth> 1.18"
Routed to Reach DP1 : Shoreline 1

Runoff by SCS TR-20 method, UH=SCS, Weighted-CN, Time Span= 5.00-20.00 hrs, dt= 0.05 hrs
Type III 24-hr 2-yr Rainfall=3.30"

Area (sf)	CN	Description
20,023	77	Woods, Good, HSG D
20,023		100.00% Pervious Area

Tc (min)	Length (feet)	Slope (ft/ft)	Velocity (ft/sec)	Capacity (cfs)	Description
3.1	20	0.1000	0.11		**Sheet Flow, Tc-1** Woods: Light underbrush n= 0.400 P2= 3.30"
0.9	118	0.1780	2.11		**Shallow Concentrated Flow, Tc-2** Woodland Kv= 5.0 fps
4.0	138	Total			

Subcatchment 1S: Pre Subcatchment 1

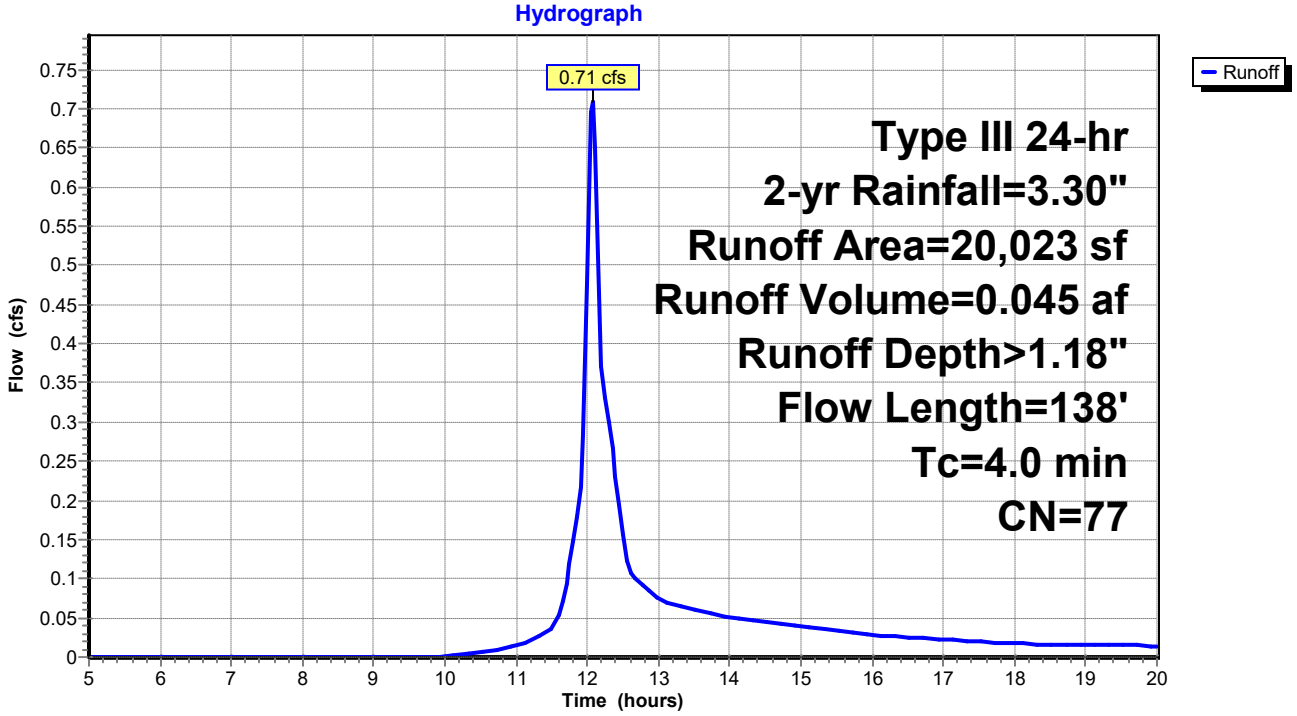

Summary for Subcatchment 2S: Pre Subcatchment 2

Runoff = 0.74 cfs @ 12.19 hrs, Volume= 0.062 af, Depth> 1.18"
Routed to Reach DP2 : Shoreline 2

Runoff by SCS TR-20 method, UH=SCS, Weighted-CN, Time Span= 5.00-20.00 hrs, dt= 0.05 hrs
Type III 24-hr 2-yr Rainfall=3.30"

Area (sf)	CN	Description
27,744	77	Woods, Good, HSG D
27,744		100.00% Pervious Area

Tc (min)	Length (feet)	Slope (ft/ft)	Velocity (ft/sec)	Capacity (cfs)	Description
12.3	148	0.1689	0.20		**Sheet Flow, Tc-1** Woods: Light underbrush n= 0.400 P2= 3.30"
0.4	50	0.1800	2.12		**Shallow Concentrated Flow, Tc-2** Woodland Kv= 5.0 fps
12.7	198	Total			

Subcatchment 2S: Pre Subcatchment 2

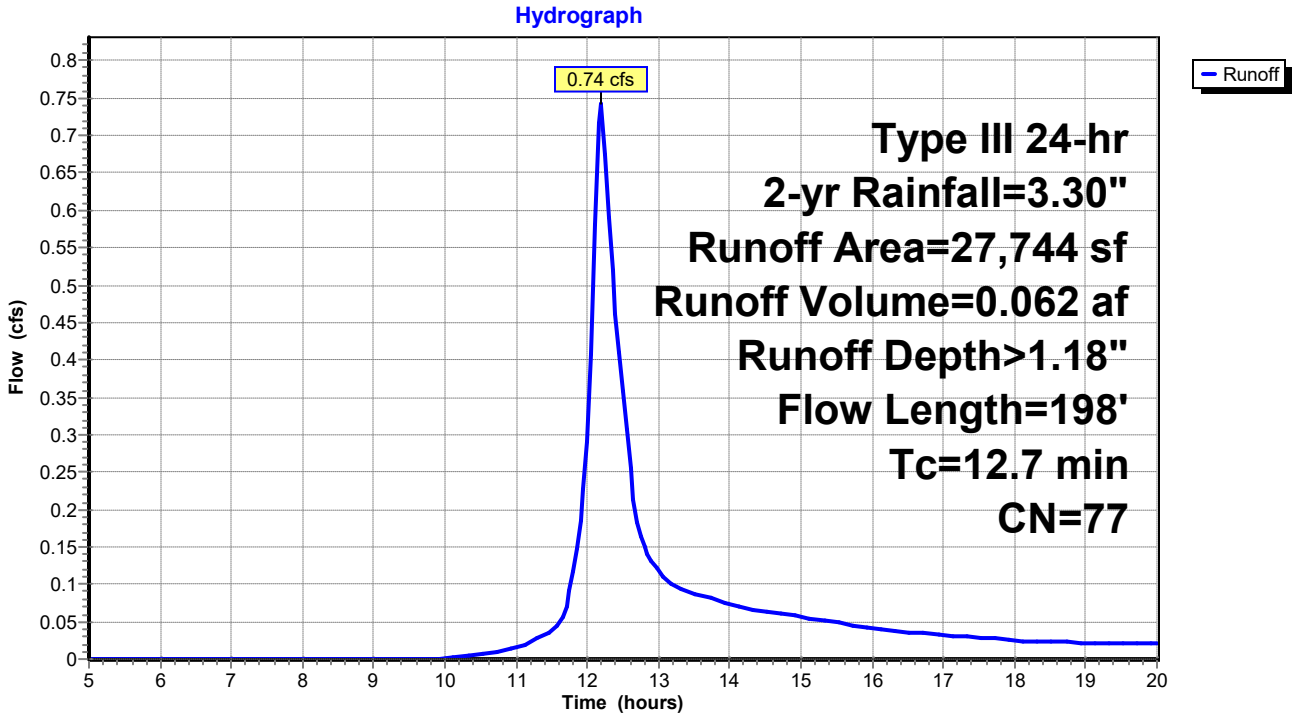

Summary for Subcatchment 3S: Pre Subcatchment 3

Runoff = 2.39 cfs @ 12.11 hrs, Volume= 0.166 af, Depth> 1.37"
Routed to Reach DP3 : Shoreline 3

Runoff by SCS TR-20 method, UH=SCS, Weighted-CN, Time Span= 5.00-20.00 hrs, dt= 0.05 hrs
Type III 24-hr 2-yr Rainfall=3.30"

	Area (sf)	CN	Description
	51,121	77	Woods, Good, HSG D
	751	98	Roofs, HSG D
	4,795	96	Gravel surface, HSG D
*	6,955	88	Sand Beach, HSG D
	63,622	80	Weighted Average
	62,871		98.82% Pervious Area
	751		1.18% Impervious Area

Tc (min)	Length (feet)	Slope (ft/ft)	Velocity (ft/sec)	Capacity (cfs)	Description
2.7	23	0.1740	0.14		**Sheet Flow, Tc-1** Woods: Light underbrush n= 0.400 P2= 3.30"
1.0	70	0.0571	1.19		**Shallow Concentrated Flow, Tc-2** Woodland Kv= 5.0 fps
0.5	170	0.1059	5.24		**Shallow Concentrated Flow, Tc-3** Unpaved Kv= 16.1 fps
2.5	140	0.0357	0.94		**Shallow Concentrated Flow, Tc-4** Woodland Kv= 5.0 fps
0.3	42	0.0714	2.67		**Shallow Concentrated Flow, Tc-4** Nearly Bare & Untilled Kv= 10.0 fps
7.0	445	Total			

Subcatchment 3S: Pre Subcatchment 3

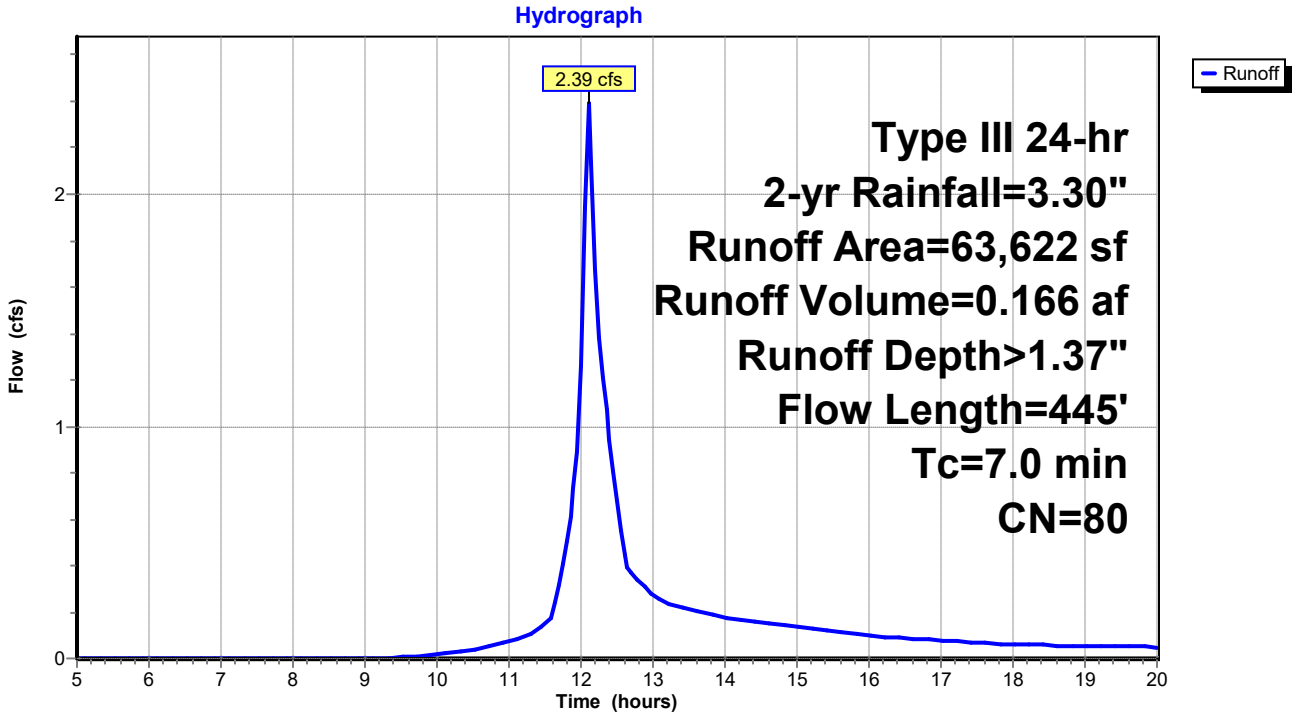

Summary for Reach DP1: Shoreline 1

Inflow Area = 0.460 ac, 0.00% Impervious, Inflow Depth > 1.18" for 2-yr event
Inflow = 0.71 cfs @ 12.07 hrs, Volume= 0.045 af
Outflow = 0.71 cfs @ 12.07 hrs, Volume= 0.045 af, Atten= 0%, Lag= 0.0 min
Routed to Reach SP1 : SACO RIVER / OCEAN

Routing by Stor-Ind+Trans method, Time Span= 5.00-20.00 hrs, dt= 0.05 hrs

Reach DP1: Shoreline 1

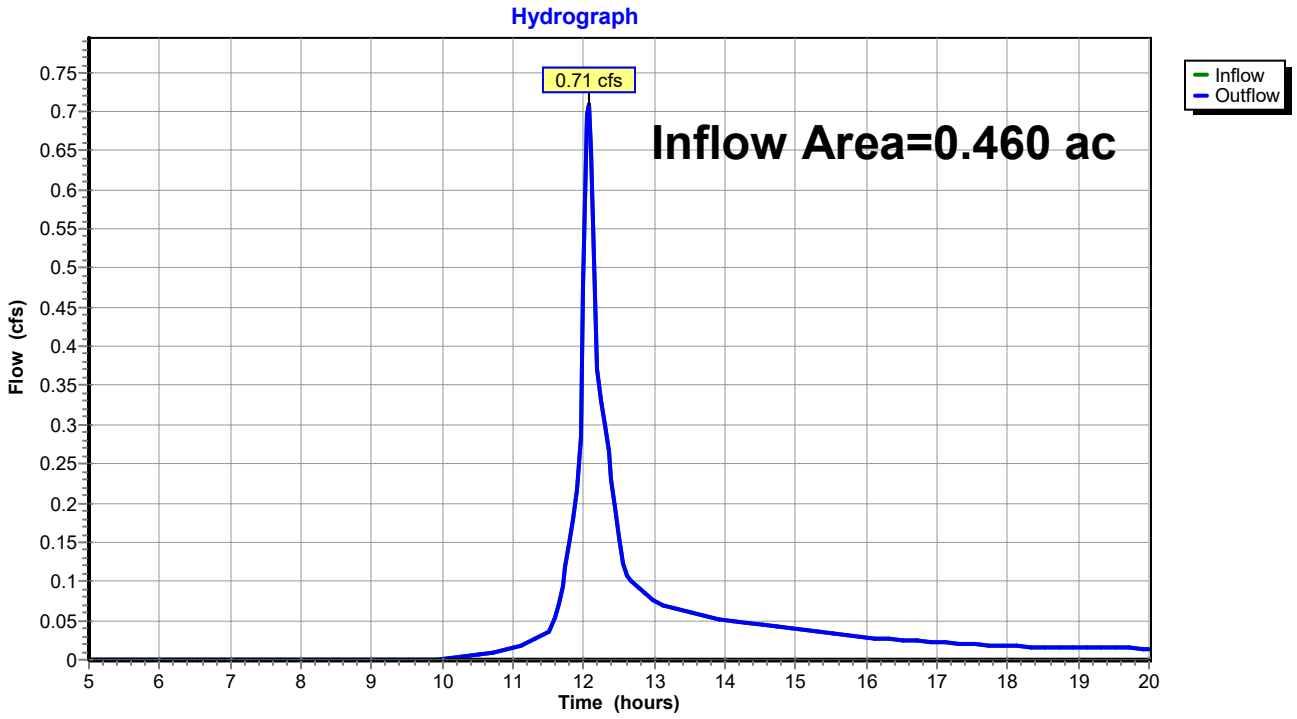

Summary for Reach DP2: Shoreline 2

Inflow Area = 0.637 ac, 0.00% Impervious, Inflow Depth > 1.18" for 2-yr event
Inflow = 0.74 cfs @ 12.19 hrs, Volume= 0.062 af
Outflow = 0.74 cfs @ 12.19 hrs, Volume= 0.062 af, Atten= 0%, Lag= 0.0 min
Routed to Reach SP1 : SACO RIVER / OCEAN

Routing by Stor-Ind+Trans method, Time Span= 5.00-20.00 hrs, dt= 0.05 hrs

Reach DP2: Shoreline 2

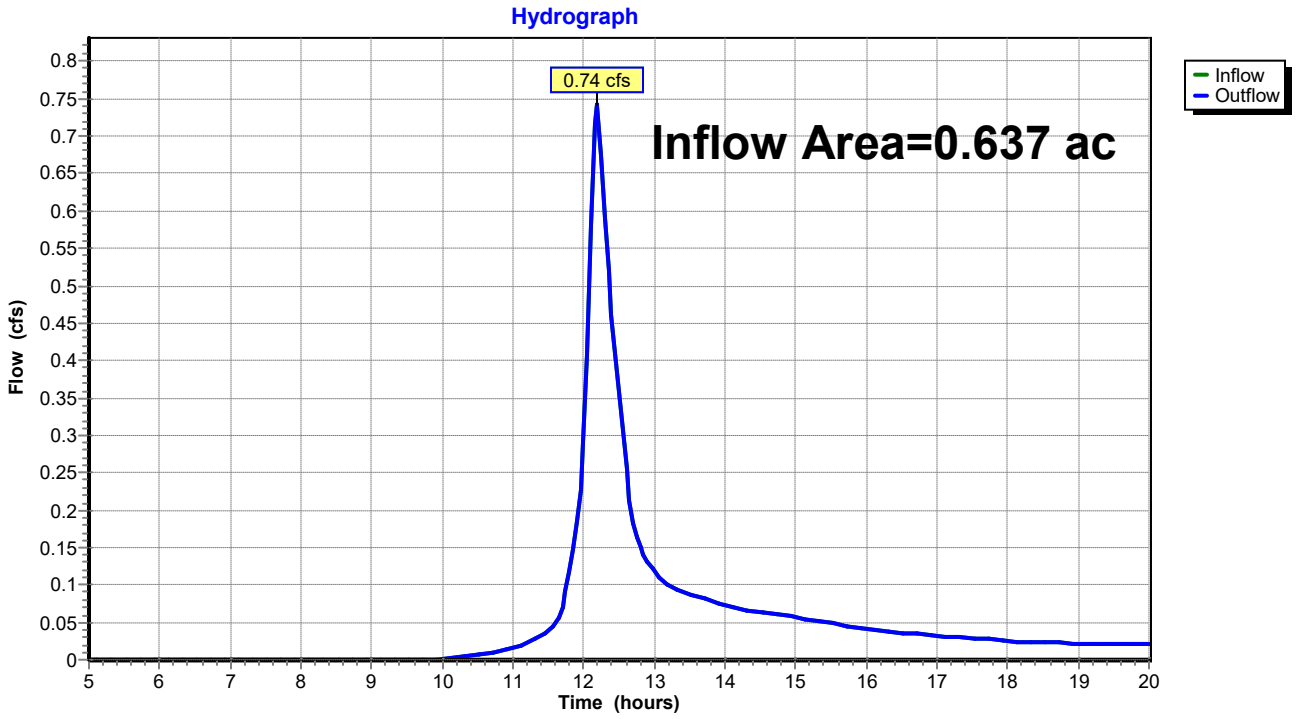

Summary for Reach DP3: Shoreline 3

Inflow Area = 1.461 ac, 1.18% Impervious, Inflow Depth > 1.37" for 2-yr event
Inflow = 2.39 cfs @ 12.11 hrs, Volume= 0.166 af
Outflow = 2.39 cfs @ 12.11 hrs, Volume= 0.166 af, Atten= 0%, Lag= 0.0 min
Routed to Reach SP1 : SACO RIVER / OCEAN

Routing by Stor-Ind+Trans method, Time Span= 5.00-20.00 hrs, dt= 0.05 hrs

Reach DP3: Shoreline 3

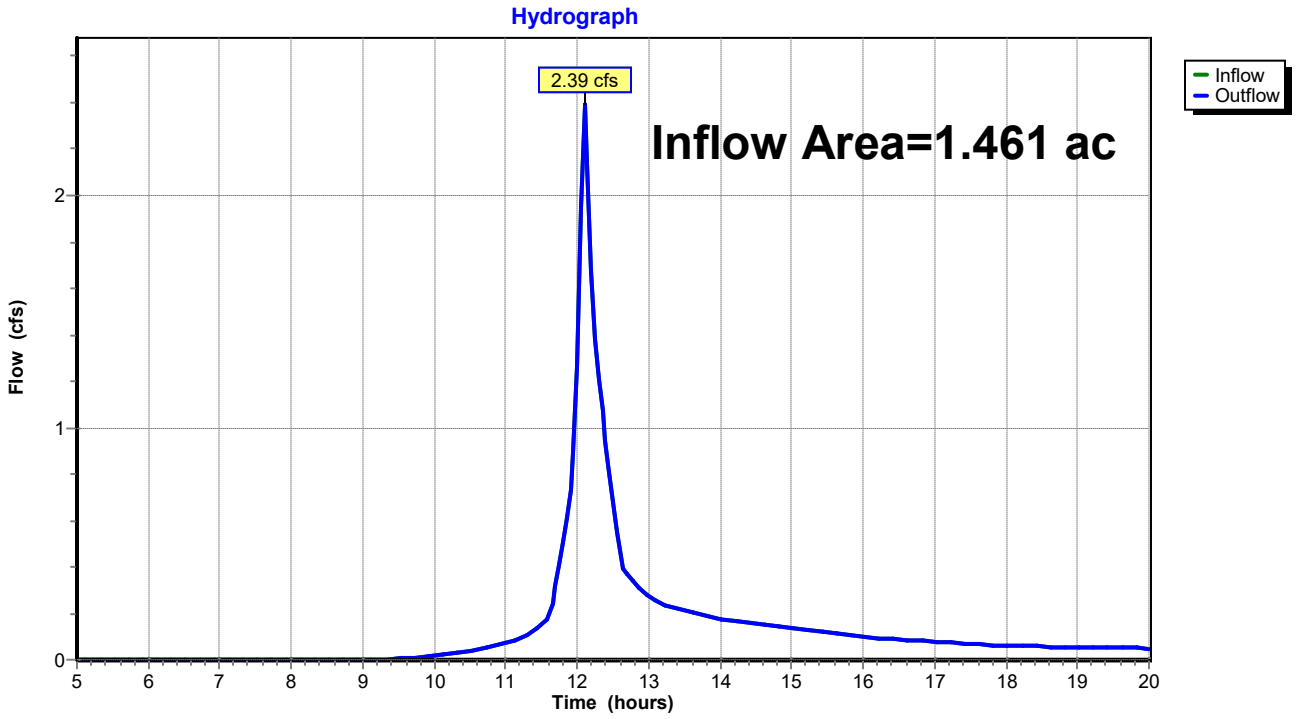

Summary for Reach SP1: SACO RIVER / OCEAN

Inflow Area = 2.557 ac, 0.67% Impervious, Inflow Depth > 1.29" for 2-yr event
Inflow = 3.63 cfs @ 12.11 hrs, Volume= 0.274 af
Outflow = 3.63 cfs @ 12.11 hrs, Volume= 0.274 af, Atten= 0%, Lag= 0.0 min

Routing by Stor-Ind+Trans method, Time Span= 5.00-20.00 hrs, dt= 0.05 hrs

Reach SP1: SACO RIVER / OCEAN

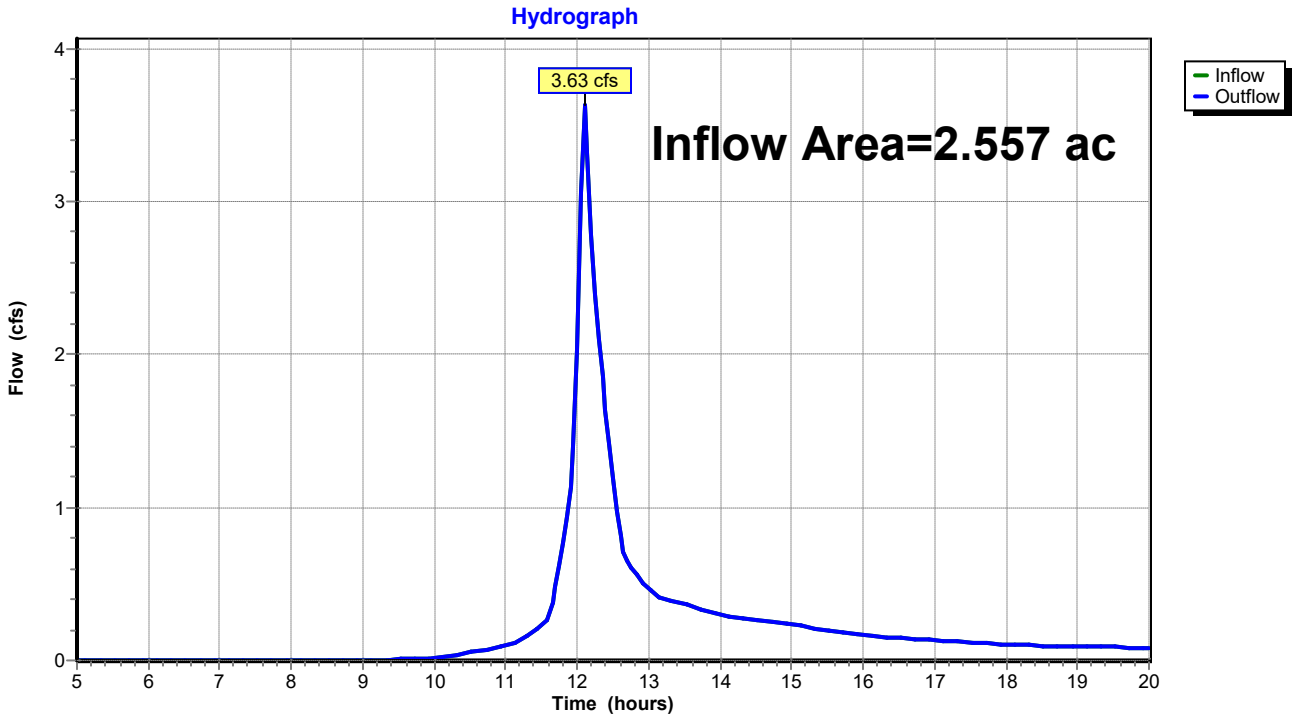

Time span=5.00-20.00 hrs, dt=0.05 hrs, 301 points
Runoff by SCS TR-20 method, UH=SCS, Weighted-CN
Reach routing by Stor-Ind+Trans method - Pond routing by Stor-Ind method

Subcatchment 1S: Pre Subcatchment 1 Runoff Area=20,023 sf 0.00% Impervious Runoff Depth>2.36"
Flow Length=138' Tc=4.0 min CN=77 Runoff=1.44 cfs 0.091 af

Subcatchment 2S: Pre Subcatchment 2 Runoff Area=27,744 sf 0.00% Impervious Runoff Depth>2.36"
Flow Length=198' Tc=12.7 min CN=77 Runoff=1.51 cfs 0.125 af

Subcatchment 3S: Pre Subcatchment 3 Runoff Area=63,622 sf 1.18% Impervious Runoff Depth>2.62"
Flow Length=445' Tc=7.0 min CN=80 Runoff=4.58 cfs 0.319 af

Reach DP1: Shoreline 1 Inflow=1.44 cfs 0.091 af
Outflow=1.44 cfs 0.091 af

Reach DP2: Shoreline 2 Inflow=1.51 cfs 0.125 af
Outflow=1.51 cfs 0.125 af

Reach DP3: Shoreline 3 Inflow=4.58 cfs 0.319 af
Outflow=4.58 cfs 0.319 af

Reach SP1: SACO RIVER / OCEAN Inflow=7.10 cfs 0.534 af
Outflow=7.10 cfs 0.534 af

Total Runoff Area = 2.557 ac Runoff Volume = 0.534 af Average Runoff Depth = 2.51"
99.33% Pervious = 2.540 ac 0.67% Impervious = 0.017 ac

Summary for Subcatchment 1S: Pre Subcatchment 1

Runoff = 1.44 cfs @ 12.06 hrs, Volume= 0.091 af, Depth> 2.36"
Routed to Reach DP1 : Shoreline 1

Runoff by SCS TR-20 method, UH=SCS, Weighted-CN, Time Span= 5.00-20.00 hrs, dt= 0.05 hrs
Type III 24-hr 10-yr Rainfall=4.90"

Area (sf)	CN	Description
20,023	77	Woods, Good, HSG D
20,023		100.00% Pervious Area

Tc (min)	Length (feet)	Slope (ft/ft)	Velocity (ft/sec)	Capacity (cfs)	Description
3.1	20	0.1000	0.11		**Sheet Flow, Tc-1** Woods: Light underbrush n= 0.400 P2= 3.30"
0.9	118	0.1780	2.11		**Shallow Concentrated Flow, Tc-2** Woodland Kv= 5.0 fps
4.0	138	Total			

Subcatchment 1S: Pre Subcatchment 1

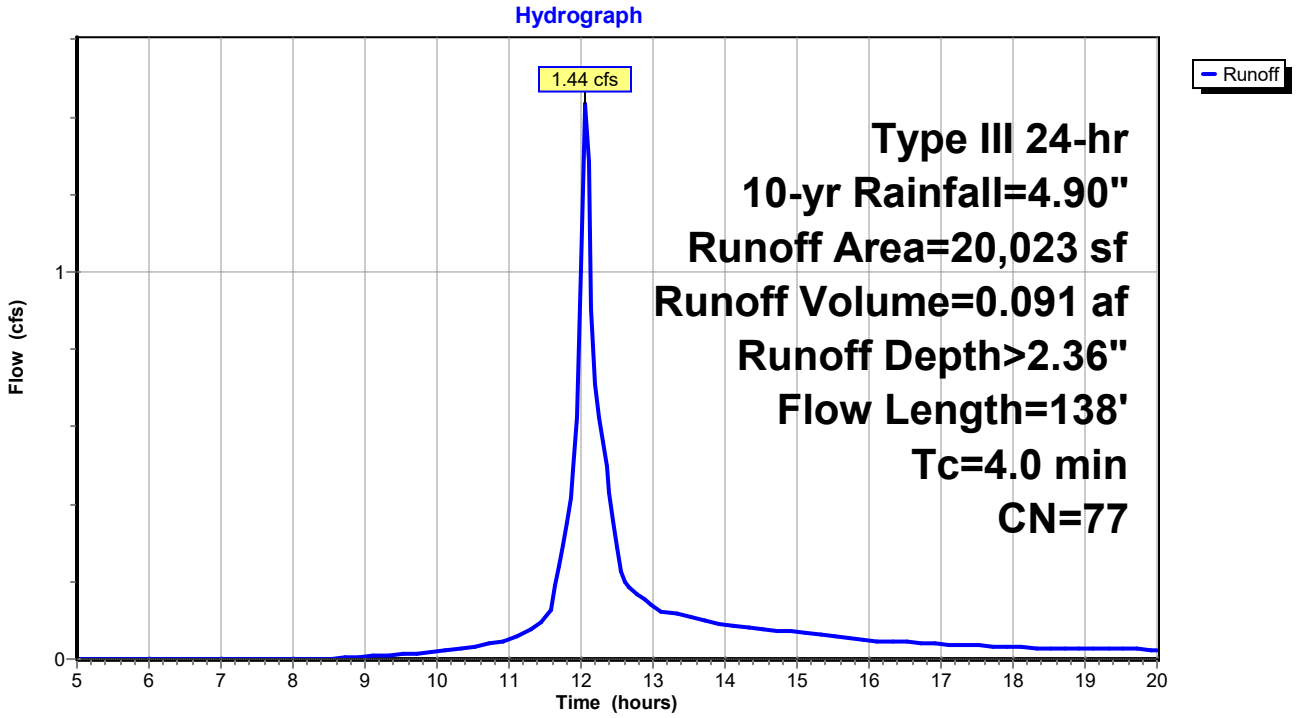

Summary for Subcatchment 2S: Pre Subcatchment 2

Runoff = 1.51 cfs @ 12.18 hrs, Volume= 0.125 af, Depth> 2.36"
Routed to Reach DP2 : Shoreline 2

Runoff by SCS TR-20 method, UH=SCS, Weighted-CN, Time Span= 5.00-20.00 hrs, dt= 0.05 hrs
Type III 24-hr 10-yr Rainfall=4.90"

Area (sf)	CN	Description
27,744	77	Woods, Good, HSG D
27,744		100.00% Pervious Area

Tc (min)	Length (feet)	Slope (ft/ft)	Velocity (ft/sec)	Capacity (cfs)	Description
12.3	148	0.1689	0.20		**Sheet Flow, Tc-1** Woods: Light underbrush n= 0.400 P2= 3.30"
0.4	50	0.1800	2.12		**Shallow Concentrated Flow, Tc-2** Woodland Kv= 5.0 fps
12.7	198	Total			

Subcatchment 2S: Pre Subcatchment 2

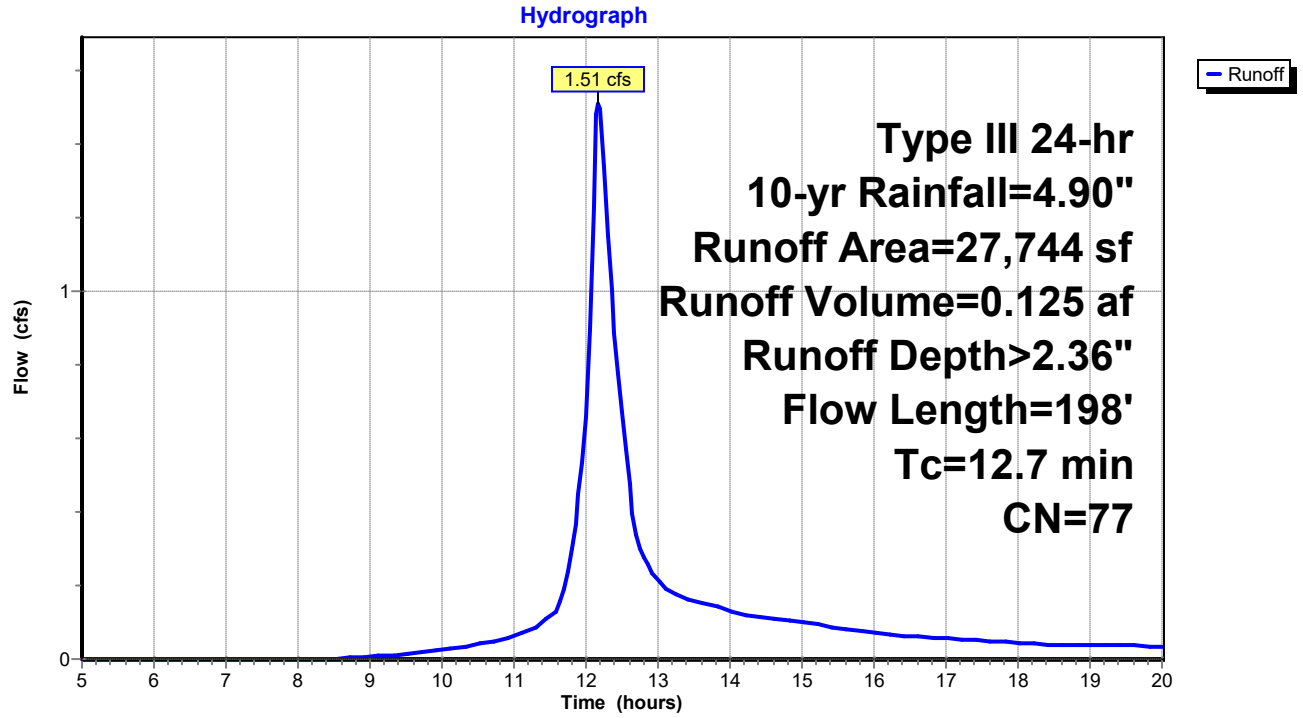

Summary for Subcatchment 3S: Pre Subcatchment 3

Runoff = 4.58 cfs @ 12.10 hrs, Volume= 0.319 af, Depth> 2.62"
Routed to Reach DP3 : Shoreline 3

Runoff by SCS TR-20 method, UH=SCS, Weighted-CN, Time Span= 5.00-20.00 hrs, dt= 0.05 hrs
Type III 24-hr 10-yr Rainfall=4.90"

	Area (sf)	CN	Description
	51,121	77	Woods, Good, HSG D
	751	98	Roofs, HSG D
	4,795	96	Gravel surface, HSG D
*	6,955	88	Sand Beach, HSG D
	63,622	80	Weighted Average
	62,871		98.82% Pervious Area
	751		1.18% Impervious Area

Tc (min)	Length (feet)	Slope (ft/ft)	Velocity (ft/sec)	Capacity (cfs)	Description
2.7	23	0.1740	0.14		**Sheet Flow, Tc-1** Woods: Light underbrush n= 0.400 P2= 3.30"
1.0	70	0.0571	1.19		**Shallow Concentrated Flow, Tc-2** Woodland Kv= 5.0 fps
0.5	170	0.1059	5.24		**Shallow Concentrated Flow, Tc-3** Unpaved Kv= 16.1 fps
2.5	140	0.0357	0.94		**Shallow Concentrated Flow, Tc-4** Woodland Kv= 5.0 fps
0.3	42	0.0714	2.67		**Shallow Concentrated Flow, Tc-4** Nearly Bare & Untilled Kv= 10.0 fps
7.0	445	Total			

Subcatchment 3S: Pre Subcatchment 3

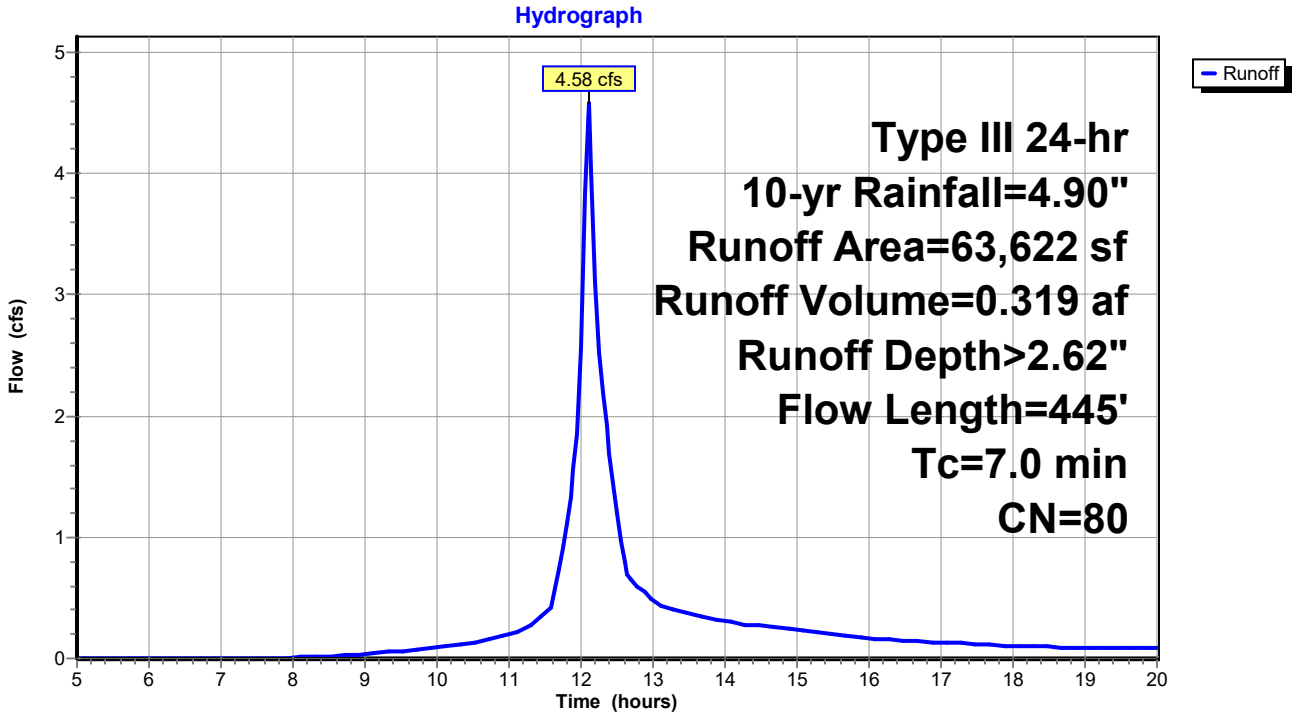

Summary for Reach DP1: Shoreline 1

Inflow Area = 0.460 ac, 0.00% Impervious, Inflow Depth > 2.36" for 10-yr event
Inflow = 1.44 cfs @ 12.06 hrs, Volume= 0.091 af
Outflow = 1.44 cfs @ 12.06 hrs, Volume= 0.091 af, Atten= 0%, Lag= 0.0 min
Routed to Reach SP1 : SACO RIVER / OCEAN

Routing by Stor-Ind+Trans method, Time Span= 5.00-20.00 hrs, dt= 0.05 hrs

Reach DP1: Shoreline 1

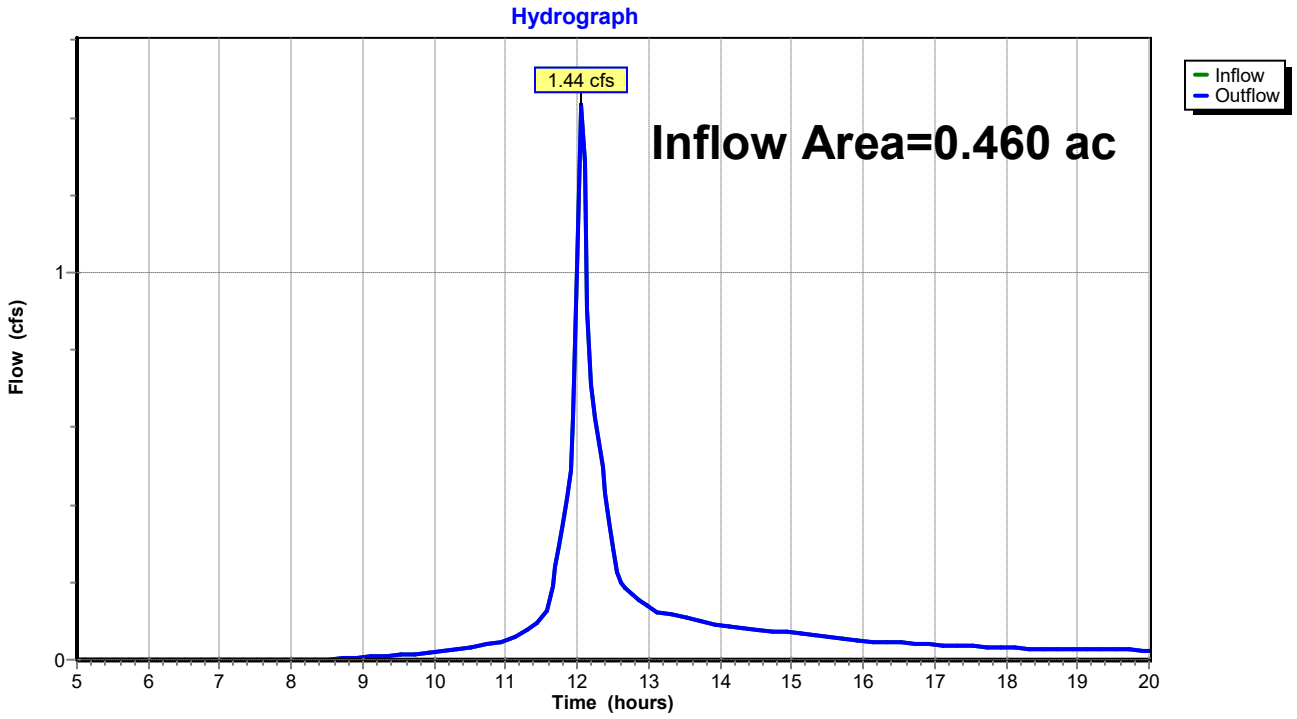

Summary for Reach DP2: Shoreline 2

Inflow Area = 0.637 ac, 0.00% Impervious, Inflow Depth > 2.36" for 10-yr event
Inflow = 1.51 cfs @ 12.18 hrs, Volume= 0.125 af
Outflow = 1.51 cfs @ 12.18 hrs, Volume= 0.125 af, Atten= 0%, Lag= 0.0 min
Routed to Reach SP1 : SACO RIVER / OCEAN

Routing by Stor-Ind+Trans method, Time Span= 5.00-20.00 hrs, dt= 0.05 hrs

Reach DP2: Shoreline 2

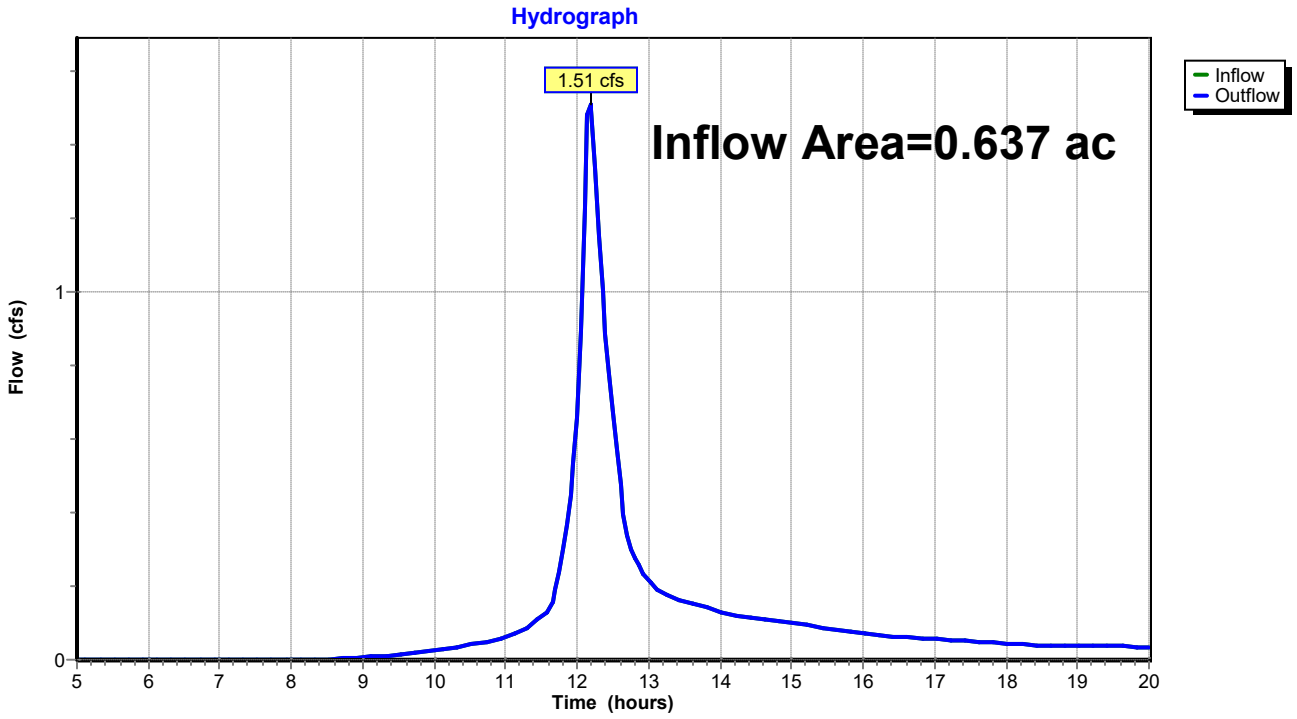

Summary for Reach DP3: Shoreline 3

Inflow Area = 1.461 ac, 1.18% Impervious, Inflow Depth > 2.62" for 10-yr event
Inflow = 4.58 cfs @ 12.10 hrs, Volume= 0.319 af
Outflow = 4.58 cfs @ 12.10 hrs, Volume= 0.319 af, Atten= 0%, Lag= 0.0 min
Routed to Reach SP1 : SACO RIVER / OCEAN

Routing by Stor-Ind+Trans method, Time Span= 5.00-20.00 hrs, dt= 0.05 hrs

Reach DP3: Shoreline 3

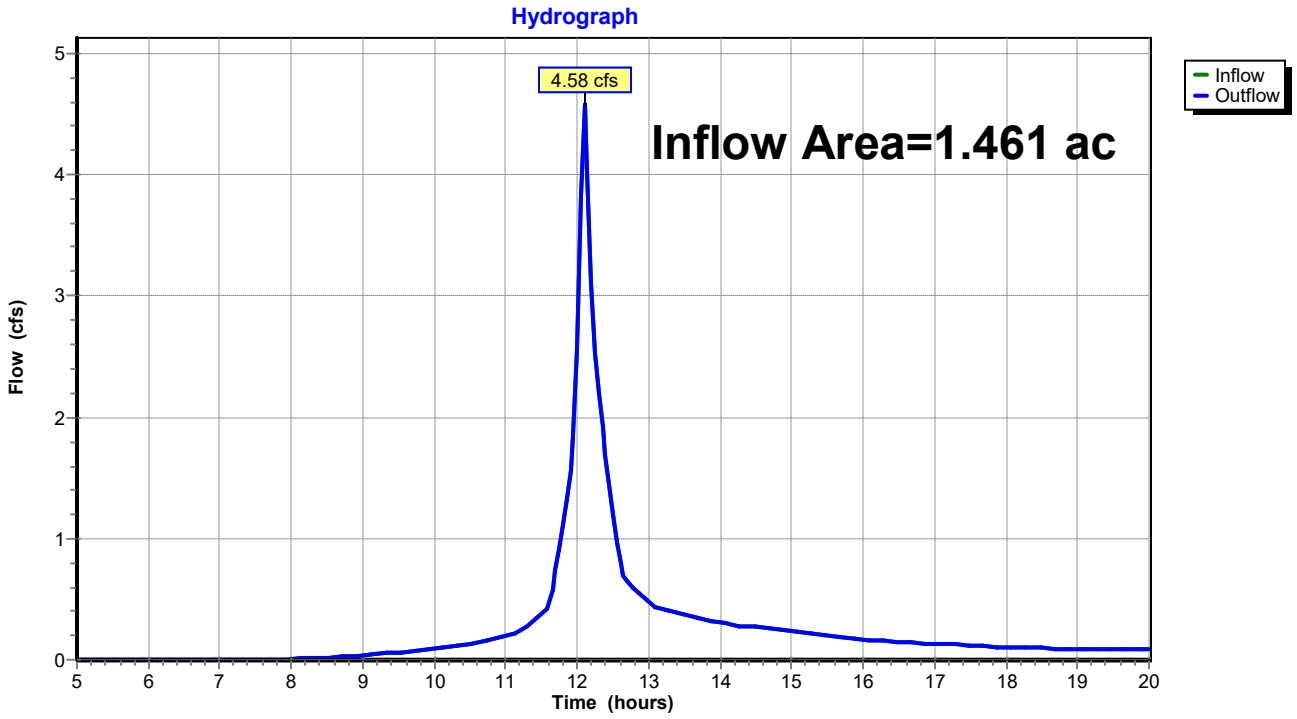

Summary for Reach SP1: SACO RIVER / OCEAN

Inflow Area = 2.557 ac, 0.67% Impervious, Inflow Depth > 2.51" for 10-yr event
Inflow = 7.10 cfs @ 12.10 hrs, Volume= 0.534 af
Outflow = 7.10 cfs @ 12.10 hrs, Volume= 0.534 af, Atten= 0%, Lag= 0.0 min

Routing by Stor-Ind+Trans method, Time Span= 5.00-20.00 hrs, dt= 0.05 hrs

Reach SP1: SACO RIVER / OCEAN

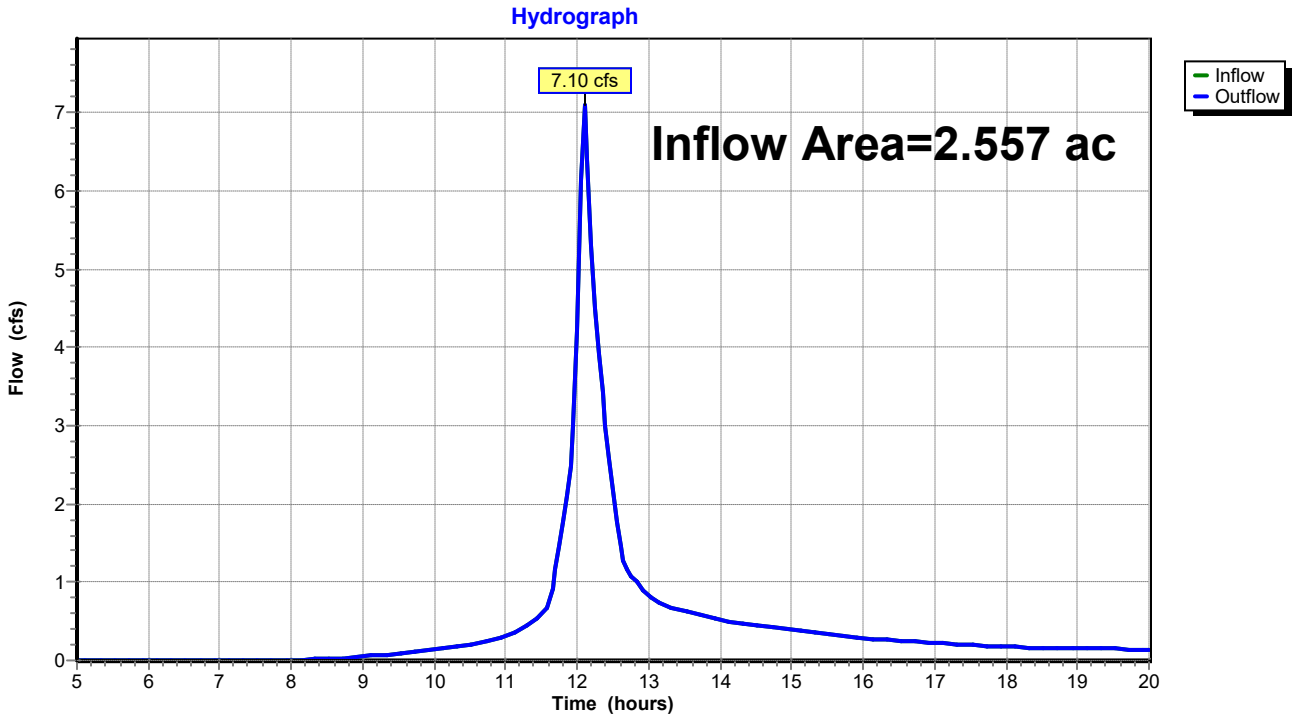

Time span=5.00-20.00 hrs, dt=0.05 hrs, 301 points
Runoff by SCS TR-20 method, UH=SCS, Weighted-CN
Reach routing by Stor-Ind+Trans method - Pond routing by Stor-Ind method

Subcatchment 1S: Pre Subcatchment 1 Runoff Area=20,023 sf 0.00% Impervious Runoff Depth>3.42"
Flow Length=138' Tc=4.0 min CN=77 Runoff=2.07 cfs 0.131 af

Subcatchment 2S: Pre Subcatchment 2 Runoff Area=27,744 sf 0.00% Impervious Runoff Depth>3.41"
Flow Length=198' Tc=12.7 min CN=77 Runoff=2.17 cfs 0.181 af

Subcatchment 3S: Pre Subcatchment 3 Runoff Area=63,622 sf 1.18% Impervious Runoff Depth>3.72"
Flow Length=445' Tc=7.0 min CN=80 Runoff=6.44 cfs 0.452 af

Reach DP1: Shoreline 1 Inflow=2.07 cfs 0.131 af
Outflow=2.07 cfs 0.131 af

Reach DP2: Shoreline 2 Inflow=2.17 cfs 0.181 af
Outflow=2.17 cfs 0.181 af

Reach DP3: Shoreline 3 Inflow=6.44 cfs 0.452 af
Outflow=6.44 cfs 0.452 af

Reach SP1: SACO RIVER / OCEAN Inflow=10.07 cfs 0.764 af
Outflow=10.07 cfs 0.764 af

Total Runoff Area = 2.557 ac Runoff Volume = 0.764 af Average Runoff Depth = 3.59"
99.33% Pervious = 2.540 ac 0.67% Impervious = 0.017 ac

Summary for Subcatchment 1S: Pre Subcatchment 1

Runoff = 2.07 cfs @ 12.06 hrs, Volume= 0.131 af, Depth> 3.42"
Routed to Reach DP1 : Shoreline 1

Runoff by SCS TR-20 method, UH=SCS, Weighted-CN, Time Span= 5.00-20.00 hrs, dt= 0.05 hrs
Type III 24-hr 25-yr Rainfall=6.20"

Area (sf)	CN	Description
20,023	77	Woods, Good, HSG D
20,023		100.00% Pervious Area

Tc (min)	Length (feet)	Slope (ft/ft)	Velocity (ft/sec)	Capacity (cfs)	Description
3.1	20	0.1000	0.11		**Sheet Flow, Tc-1** Woods: Light underbrush n= 0.400 P2= 3.30"
0.9	118	0.1780	2.11		**Shallow Concentrated Flow, Tc-2** Woodland Kv= 5.0 fps
4.0	138	Total			

Subcatchment 1S: Pre Subcatchment 1

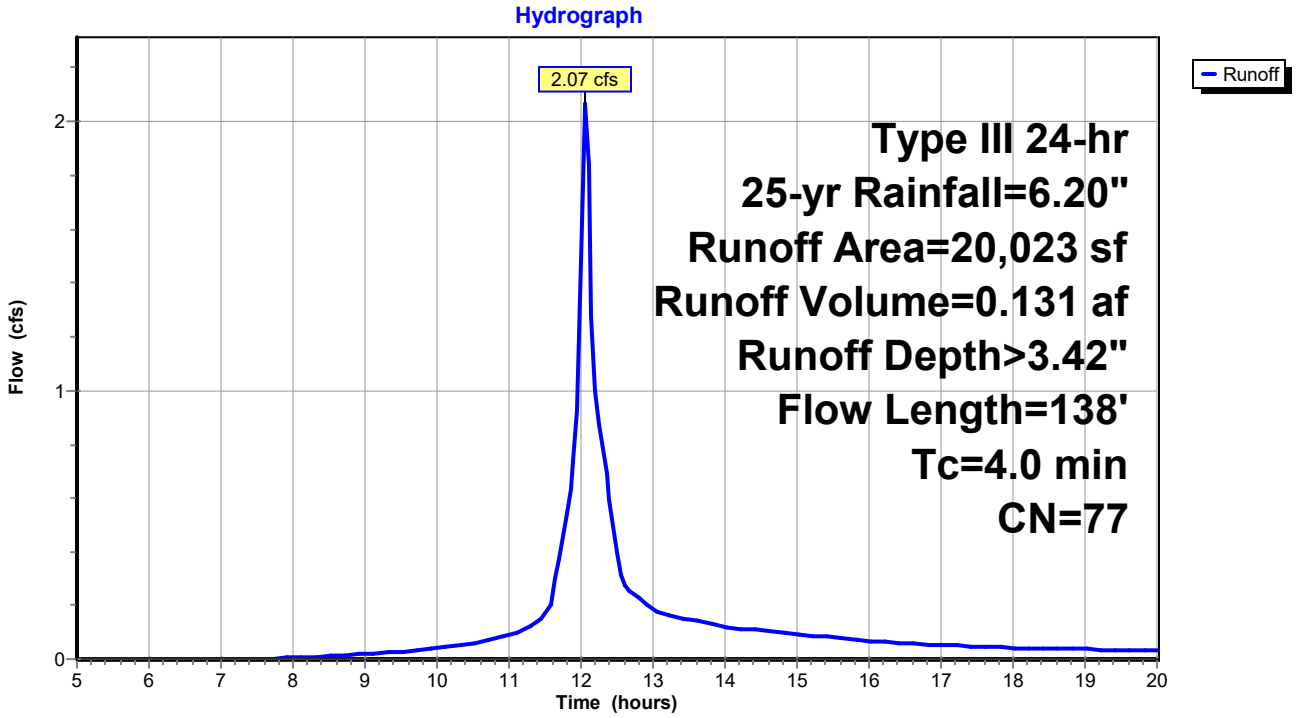

Summary for Subcatchment 2S: Pre Subcatchment 2

Runoff = 2.17 cfs @ 12.18 hrs, Volume= 0.181 af, Depth> 3.41"
Routed to Reach DP2 : Shoreline 2

Runoff by SCS TR-20 method, UH=SCS, Weighted-CN, Time Span= 5.00-20.00 hrs, dt= 0.05 hrs
Type III 24-hr 25-yr Rainfall=6.20"

Area (sf)	CN	Description
27,744	77	Woods, Good, HSG D
27,744		100.00% Pervious Area

Tc (min)	Length (feet)	Slope (ft/ft)	Velocity (ft/sec)	Capacity (cfs)	Description
12.3	148	0.1689	0.20		**Sheet Flow, Tc-1** Woods: Light underbrush n= 0.400 P2= 3.30"
0.4	50	0.1800	2.12		**Shallow Concentrated Flow, Tc-2** Woodland Kv= 5.0 fps
12.7	198	Total			

Subcatchment 2S: Pre Subcatchment 2

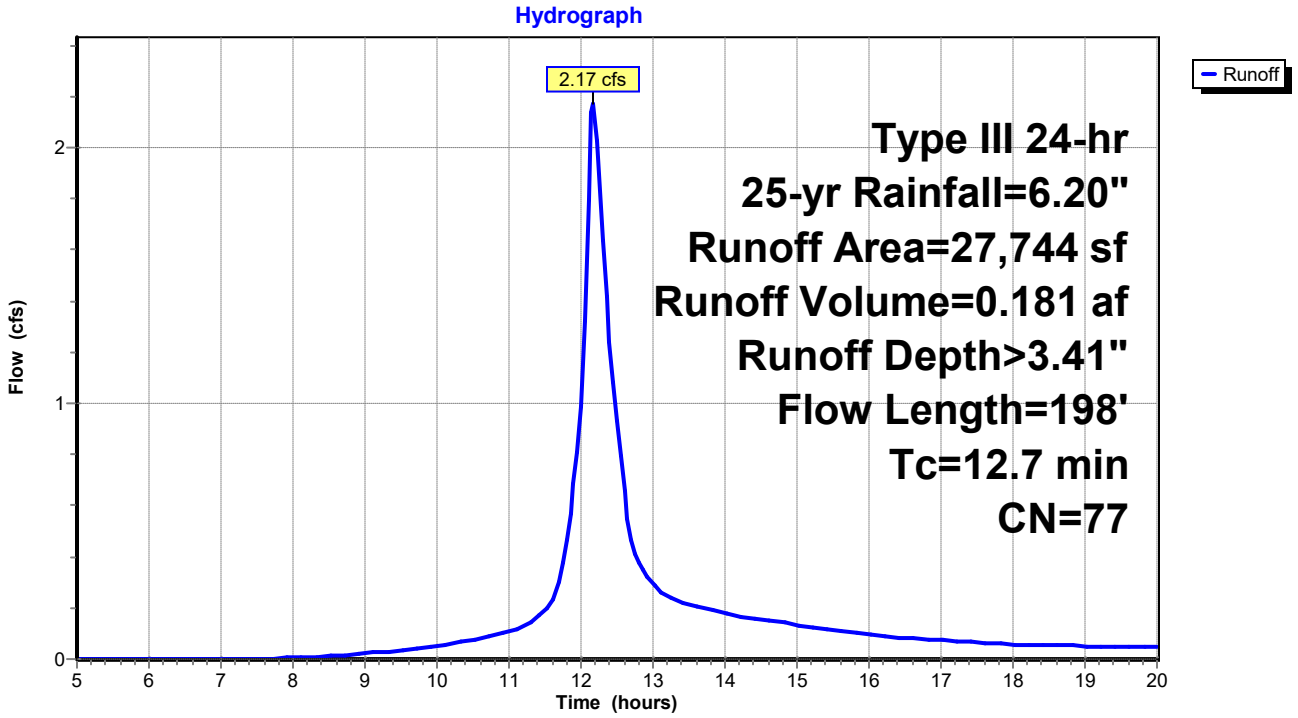

Summary for Subcatchment 3S: Pre Subcatchment 3

Runoff = 6.44 cfs @ 12.10 hrs, Volume= 0.452 af, Depth> 3.72"
Routed to Reach DP3 : Shoreline 3

Runoff by SCS TR-20 method, UH=SCS, Weighted-CN, Time Span= 5.00-20.00 hrs, dt= 0.05 hrs
Type III 24-hr 25-yr Rainfall=6.20"

	Area (sf)	CN	Description
	51,121	77	Woods, Good, HSG D
	751	98	Roofs, HSG D
	4,795	96	Gravel surface, HSG D
*	6,955	88	Sand Beach, HSG D
	63,622	80	Weighted Average
	62,871		98.82% Pervious Area
	751		1.18% Impervious Area

Tc (min)	Length (feet)	Slope (ft/ft)	Velocity (ft/sec)	Capacity (cfs)	Description
2.7	23	0.1740	0.14		**Sheet Flow, Tc-1** Woods: Light underbrush n= 0.400 P2= 3.30"
1.0	70	0.0571	1.19		**Shallow Concentrated Flow, Tc-2** Woodland Kv= 5.0 fps
0.5	170	0.1059	5.24		**Shallow Concentrated Flow, Tc-3** Unpaved Kv= 16.1 fps
2.5	140	0.0357	0.94		**Shallow Concentrated Flow, Tc-4** Woodland Kv= 5.0 fps
0.3	42	0.0714	2.67		**Shallow Concentrated Flow, Tc-4** Nearly Bare & Untilled Kv= 10.0 fps
7.0	445	Total			

Subcatchment 3S: Pre Subcatchment 3

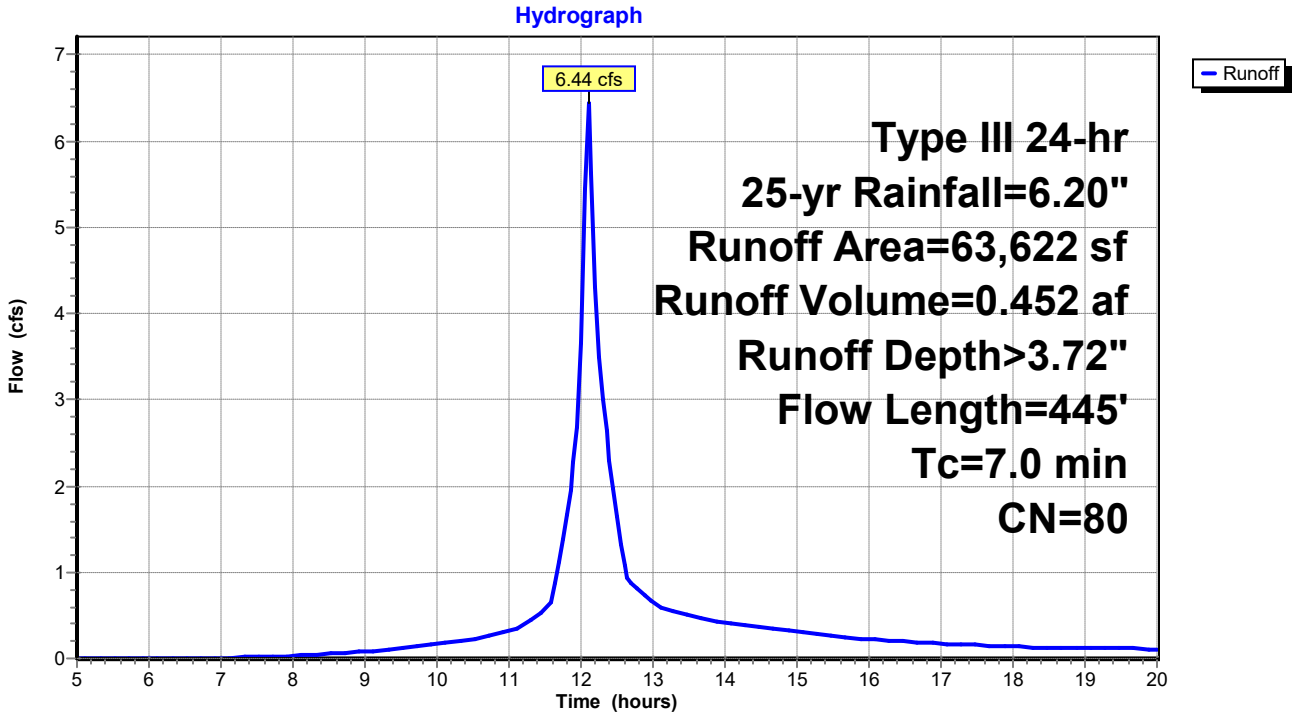

Summary for Reach DP1: Shoreline 1

Inflow Area = 0.460 ac, 0.00% Impervious, Inflow Depth > 3.42" for 25-yr event
Inflow = 2.07 cfs @ 12.06 hrs, Volume= 0.131 af
Outflow = 2.07 cfs @ 12.06 hrs, Volume= 0.131 af, Atten= 0%, Lag= 0.0 min
Routed to Reach SP1 : SACO RIVER / OCEAN

Routing by Stor-Ind+Trans method, Time Span= 5.00-20.00 hrs, dt= 0.05 hrs

Reach DP1: Shoreline 1

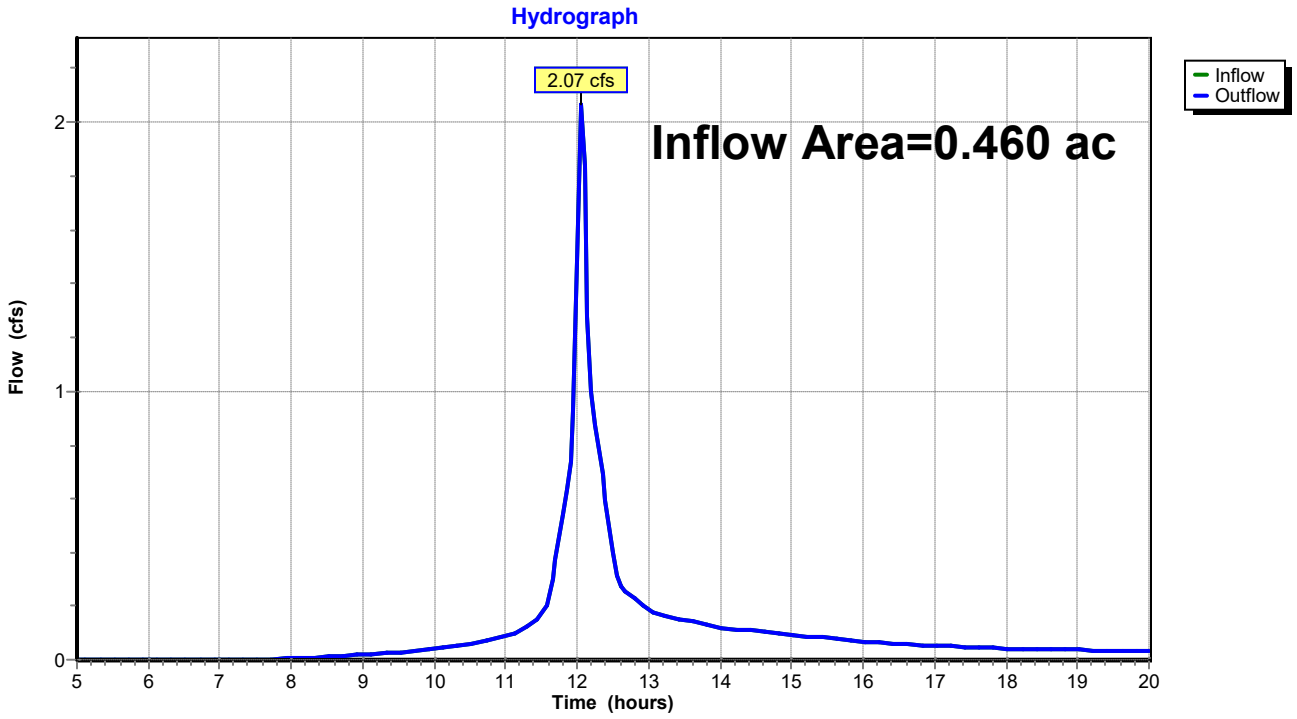

Summary for Reach DP2: Shoreline 2

Inflow Area = 0.637 ac, 0.00% Impervious, Inflow Depth > 3.41" for 25-yr event
Inflow = 2.17 cfs @ 12.18 hrs, Volume= 0.181 af
Outflow = 2.17 cfs @ 12.18 hrs, Volume= 0.181 af, Atten= 0%, Lag= 0.0 min
Routed to Reach SP1 : SACO RIVER / OCEAN

Routing by Stor-Ind+Trans method, Time Span= 5.00-20.00 hrs, dt= 0.05 hrs

Reach DP2: Shoreline 2

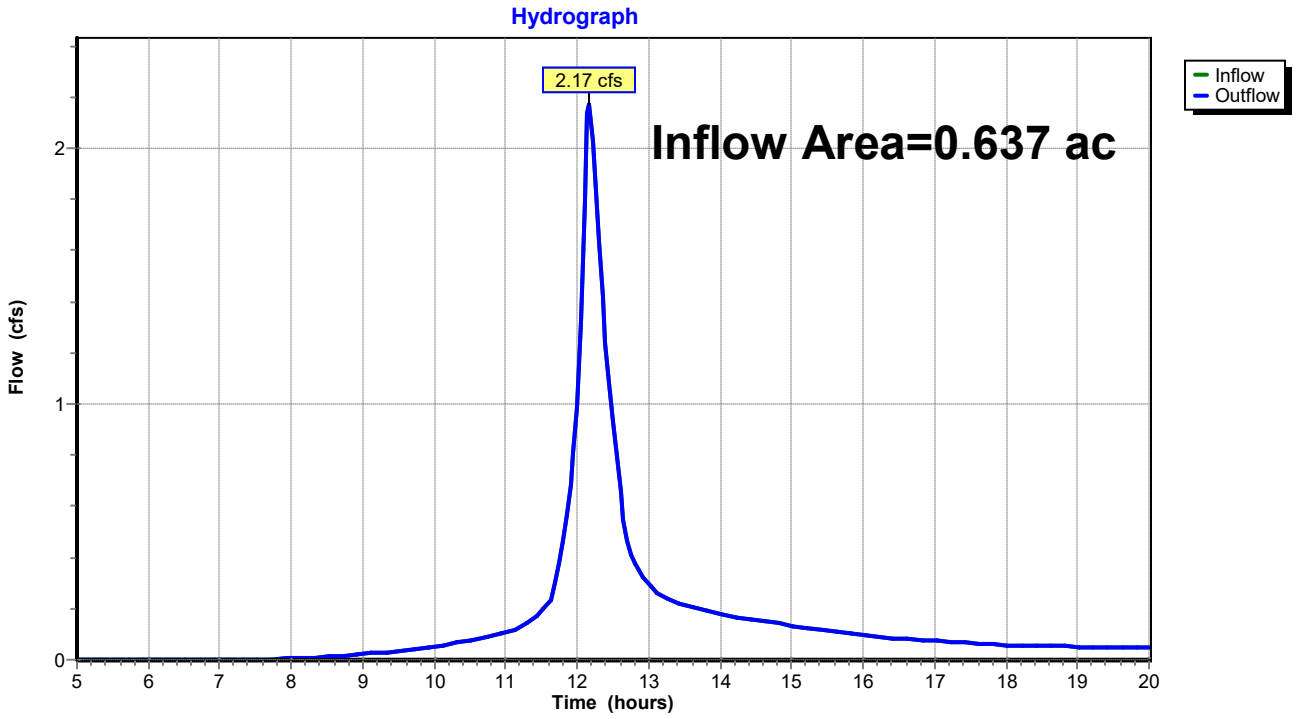

Summary for Reach DP3: Shoreline 3

Inflow Area = 1.461 ac, 1.18% Impervious, Inflow Depth > 3.72" for 25-yr event
Inflow = 6.44 cfs @ 12.10 hrs, Volume= 0.452 af
Outflow = 6.44 cfs @ 12.10 hrs, Volume= 0.452 af, Atten= 0%, Lag= 0.0 min
Routed to Reach SP1 : SACO RIVER / OCEAN

Routing by Stor-Ind+Trans method, Time Span= 5.00-20.00 hrs, dt= 0.05 hrs

Reach DP3: Shoreline 3

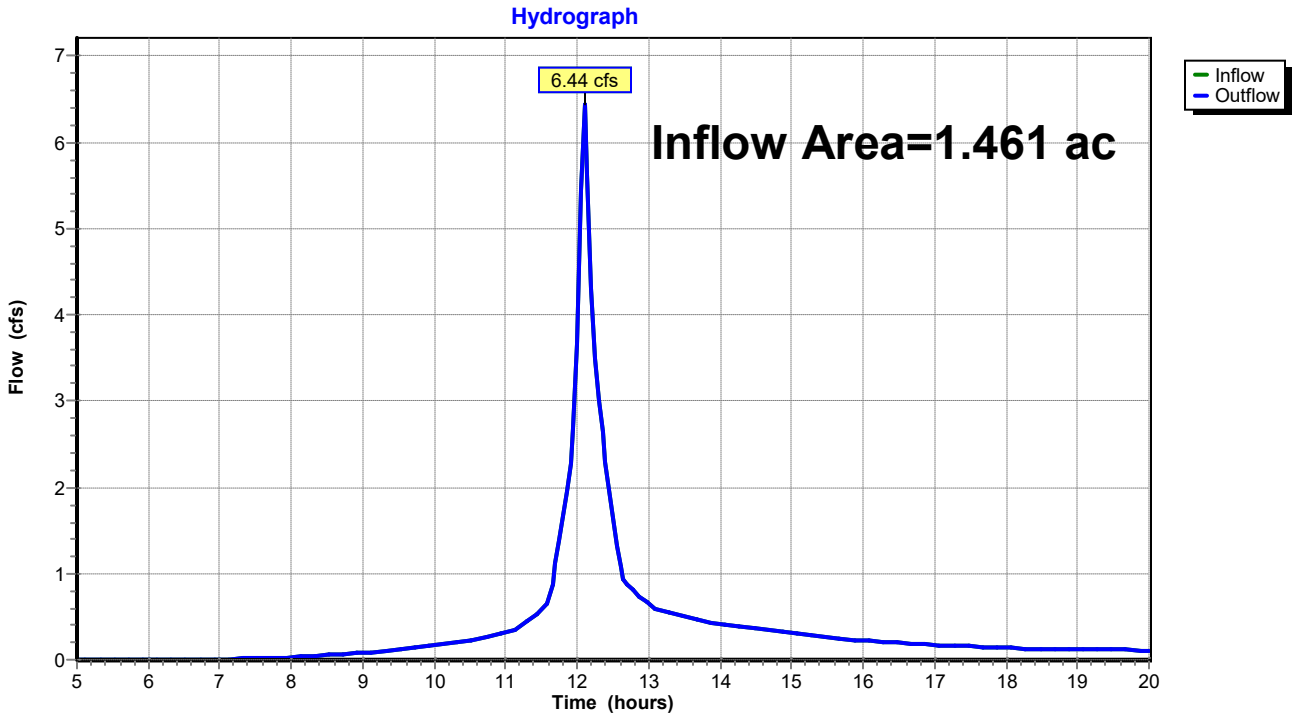

Summary for Reach SP1: SACO RIVER / OCEAN

Inflow Area = 2.557 ac, 0.67% Impervious, Inflow Depth > 3.59" for 25-yr event
Inflow = 10.07 cfs @ 12.10 hrs, Volume= 0.764 af
Outflow = 10.07 cfs @ 12.10 hrs, Volume= 0.764 af, Atten= 0%, Lag= 0.0 min

Routing by Stor-Ind+Trans method, Time Span= 5.00-20.00 hrs, dt= 0.05 hrs

Reach SP1: SACO RIVER / OCEAN

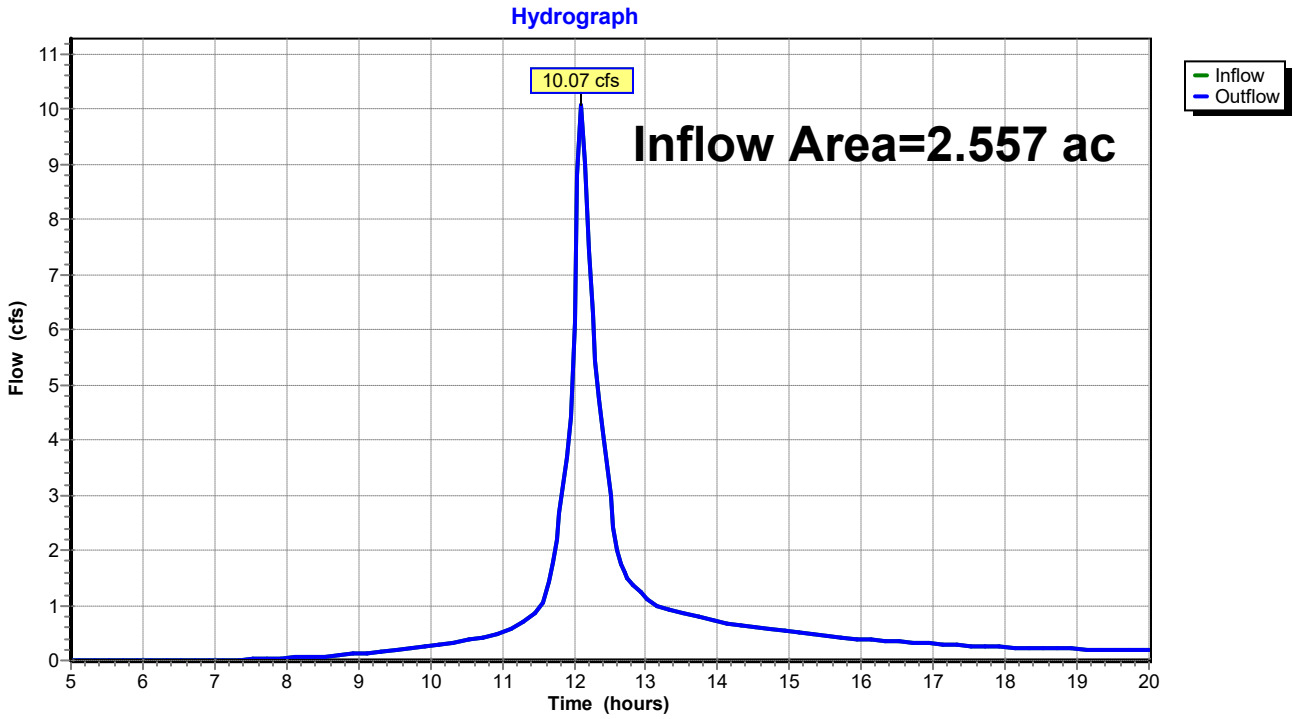

Time span=5.00-20.00 hrs, dt=0.05 hrs, 301 points
Runoff by SCS TR-20 method, UH=SCS, Weighted-CN
Reach routing by Stor-Ind+Trans method - Pond routing by Stor-Ind method

Subcatchment 1S: Pre Subcatchment 1 Runoff Area=20,023 sf 0.00% Impervious Runoff Depth>5.57"
Flow Length=138' Tc=4.0 min CN=77 Runoff=3.31 cfs 0.213 af

Subcatchment 2S: Pre Subcatchment 2 Runoff Area=27,744 sf 0.00% Impervious Runoff Depth>5.56"
Flow Length=198' Tc=12.7 min CN=77 Runoff=3.50 cfs 0.295 af

Subcatchment 3S: Pre Subcatchment 3 Runoff Area=63,622 sf 1.18% Impervious Runoff Depth>5.92"
Flow Length=445' Tc=7.0 min CN=80 Runoff=10.05 cfs 0.721 af

Reach DP1: Shoreline 1 Inflow=3.31 cfs 0.213 af
Outflow=3.31 cfs 0.213 af

Reach DP2: Shoreline 2 Inflow=3.50 cfs 0.295 af
Outflow=3.50 cfs 0.295 af

Reach DP3: Shoreline 3 Inflow=10.05 cfs 0.721 af
Outflow=10.05 cfs 0.721 af

Reach SP1: SACO RIVER / OCEAN Inflow=15.89 cfs 1.229 af
Outflow=15.89 cfs 1.229 af

Total Runoff Area = 2.557 ac Runoff Volume = 1.229 af Average Runoff Depth = 5.77"
99.33% Pervious = 2.540 ac 0.67% Impervious = 0.017 ac

Summary for Subcatchment 1S: Pre Subcatchment 1

Runoff = 3.31 cfs @ 12.06 hrs, Volume= 0.213 af, Depth> 5.57"
Routed to Reach DP1 : Shoreline 1

Runoff by SCS TR-20 method, UH=SCS, Weighted-CN, Time Span= 5.00-20.00 hrs, dt= 0.05 hrs
Type III 24-hr 100-yr Rainfall=8.70"

Area (sf)	CN	Description
20,023	77	Woods, Good, HSG D
20,023		100.00% Pervious Area

Tc (min)	Length (feet)	Slope (ft/ft)	Velocity (ft/sec)	Capacity (cfs)	Description
3.1	20	0.1000	0.11		**Sheet Flow, Tc-1** Woods: Light underbrush n= 0.400 P2= 3.30"
0.9	118	0.1780	2.11		**Shallow Concentrated Flow, Tc-2** Woodland Kv= 5.0 fps
4.0	138	Total			

Subcatchment 1S: Pre Subcatchment 1

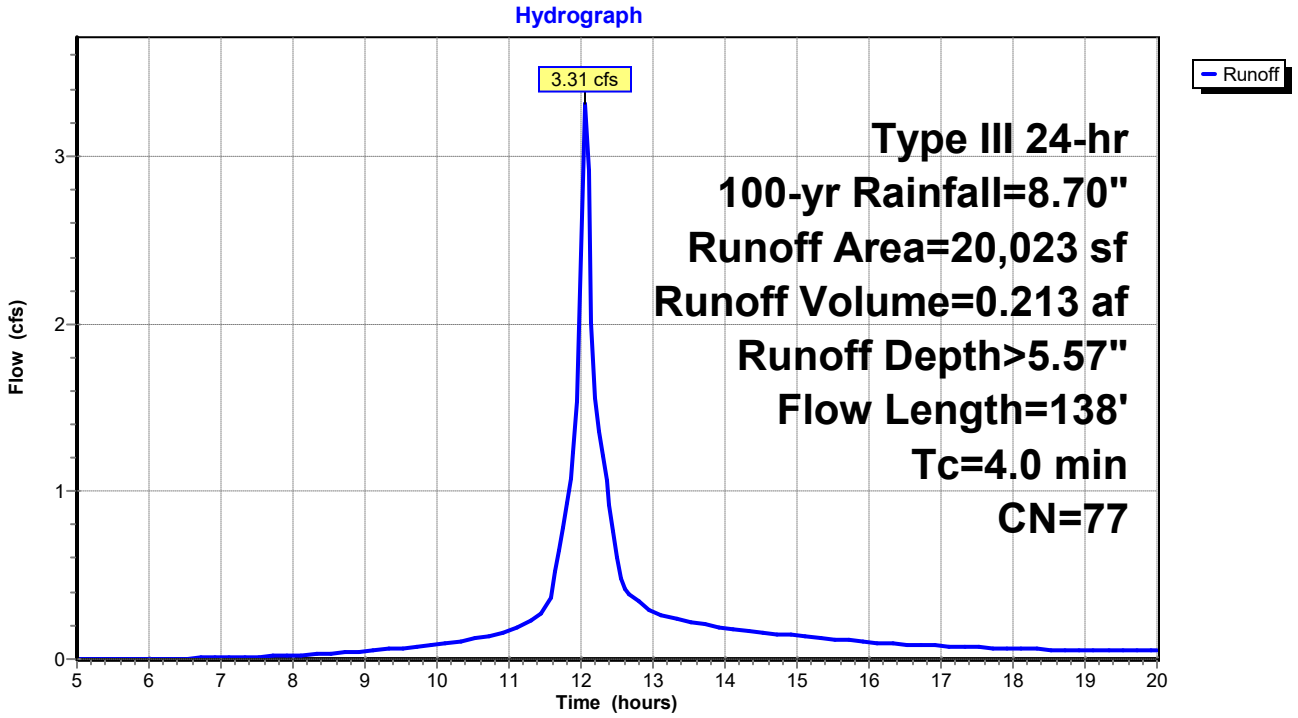

Summary for Subcatchment 2S: Pre Subcatchment 2

Runoff = 3.50 cfs @ 12.17 hrs, Volume= 0.295 af, Depth> 5.56"
Routed to Reach DP2 : Shoreline 2

Runoff by SCS TR-20 method, UH=SCS, Weighted-CN, Time Span= 5.00-20.00 hrs, dt= 0.05 hrs
Type III 24-hr 100-yr Rainfall=8.70"

Area (sf)	CN	Description
27,744	77	Woods, Good, HSG D
27,744		100.00% Pervious Area

Tc (min)	Length (feet)	Slope (ft/ft)	Velocity (ft/sec)	Capacity (cfs)	Description
12.3	148	0.1689	0.20		**Sheet Flow, Tc-1** Woods: Light underbrush n= 0.400 P2= 3.30"
0.4	50	0.1800	2.12		**Shallow Concentrated Flow, Tc-2** Woodland Kv= 5.0 fps
12.7	198	Total			

Subcatchment 2S: Pre Subcatchment 2

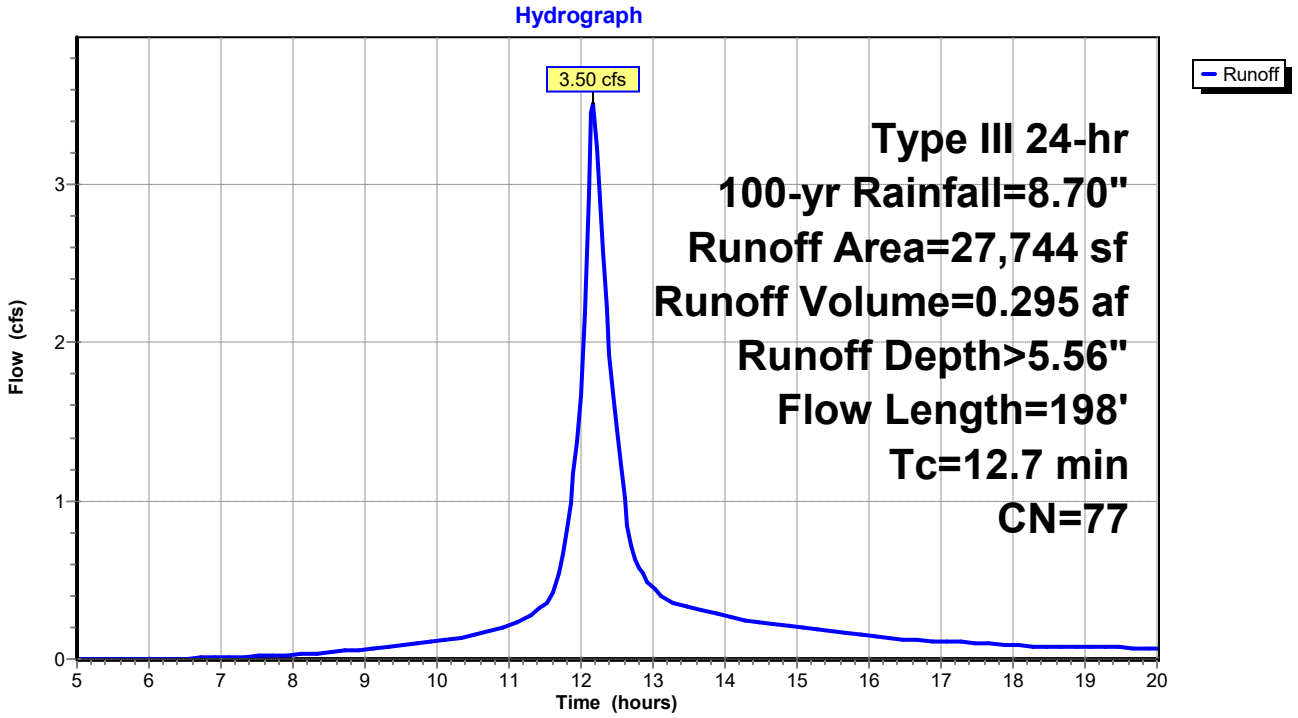

Summary for Subcatchment 3S: Pre Subcatchment 3

Runoff = 10.05 cfs @ 12.10 hrs, Volume= 0.721 af, Depth> 5.92"
Routed to Reach DP3 : Shoreline 3

Runoff by SCS TR-20 method, UH=SCS, Weighted-CN, Time Span= 5.00-20.00 hrs, dt= 0.05 hrs
Type III 24-hr 100-yr Rainfall=8.70"

	Area (sf)	CN	Description
	51,121	77	Woods, Good, HSG D
	751	98	Roofs, HSG D
	4,795	96	Gravel surface, HSG D
*	6,955	88	Sand Beach, HSG D
	63,622	80	Weighted Average
	62,871		98.82% Pervious Area
	751		1.18% Impervious Area

Tc (min)	Length (feet)	Slope (ft/ft)	Velocity (ft/sec)	Capacity (cfs)	Description
2.7	23	0.1740	0.14		**Sheet Flow, Tc-1** Woods: Light underbrush n= 0.400 P2= 3.30"
1.0	70	0.0571	1.19		**Shallow Concentrated Flow, Tc-2** Woodland Kv= 5.0 fps
0.5	170	0.1059	5.24		**Shallow Concentrated Flow, Tc-3** Unpaved Kv= 16.1 fps
2.5	140	0.0357	0.94		**Shallow Concentrated Flow, Tc-4** Woodland Kv= 5.0 fps
0.3	42	0.0714	2.67		**Shallow Concentrated Flow, Tc-4** Nearly Bare & Untilled Kv= 10.0 fps
7.0	445	Total			

Subcatchment 3S: Pre Subcatchment 3

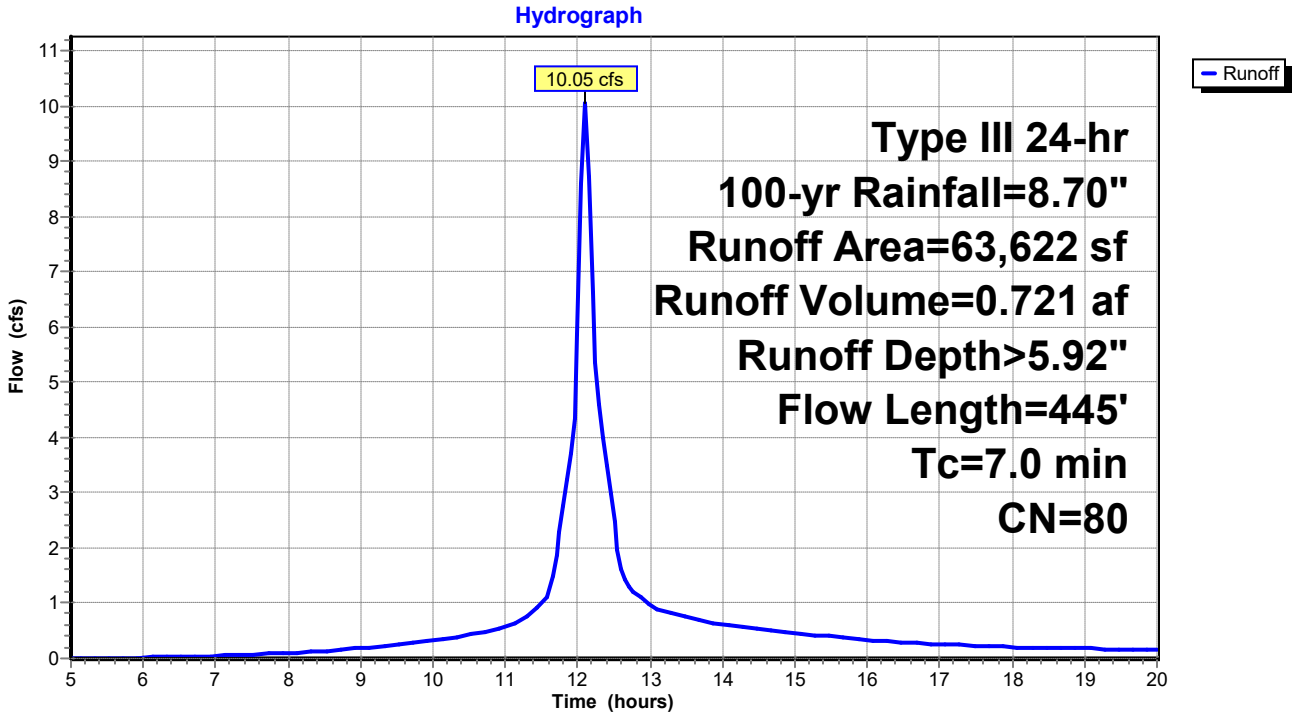

Summary for Reach DP1: Shoreline 1

Inflow Area = 0.460 ac, 0.00% Impervious, Inflow Depth > 5.57" for 100-yr event
Inflow = 3.31 cfs @ 12.06 hrs, Volume= 0.213 af
Outflow = 3.31 cfs @ 12.06 hrs, Volume= 0.213 af, Atten= 0%, Lag= 0.0 min
Routed to Reach SP1 : SACO RIVER / OCEAN

Routing by Stor-Ind+Trans method, Time Span= 5.00-20.00 hrs, dt= 0.05 hrs

Reach DP1: Shoreline 1

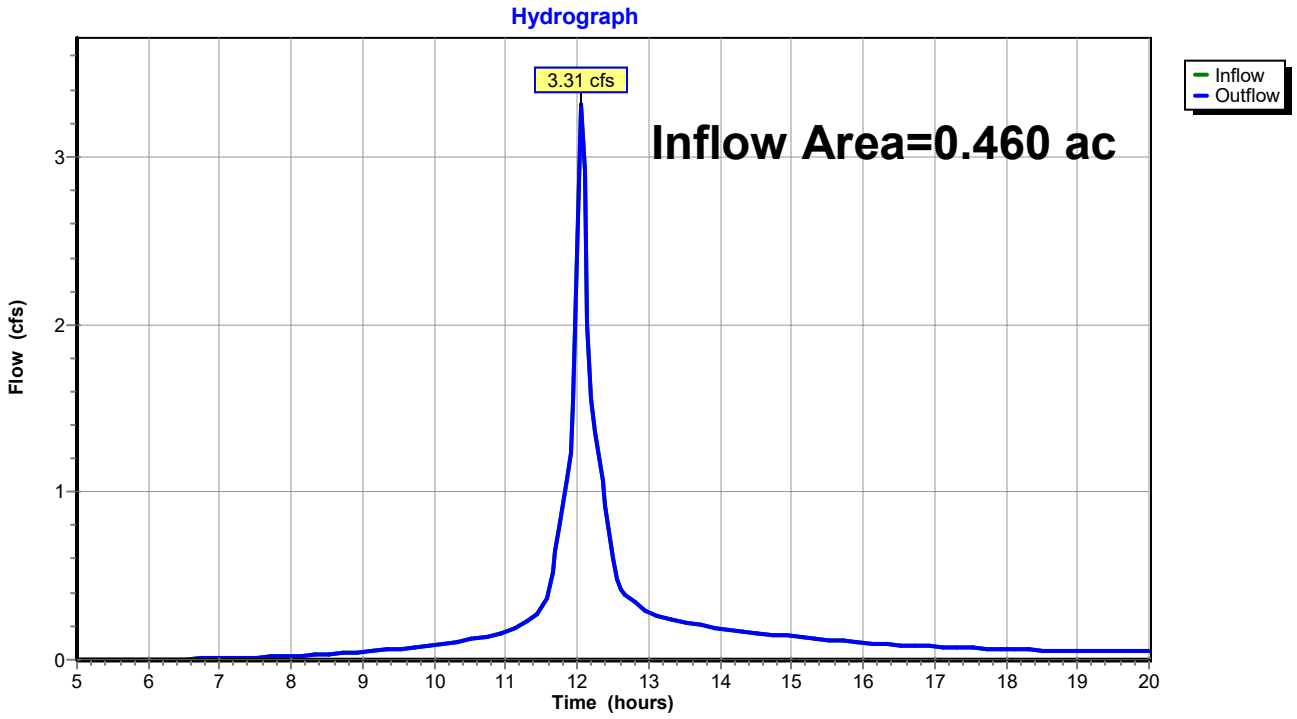

Summary for Reach DP2: Shoreline 2

Inflow Area = 0.637 ac, 0.00% Impervious, Inflow Depth > 5.56" for 100-yr event
Inflow = 3.50 cfs @ 12.17 hrs, Volume= 0.295 af
Outflow = 3.50 cfs @ 12.17 hrs, Volume= 0.295 af, Atten= 0%, Lag= 0.0 min
Routed to Reach SP1 : SACO RIVER / OCEAN

Routing by Stor-Ind+Trans method, Time Span= 5.00-20.00 hrs, dt= 0.05 hrs

Reach DP2: Shoreline 2

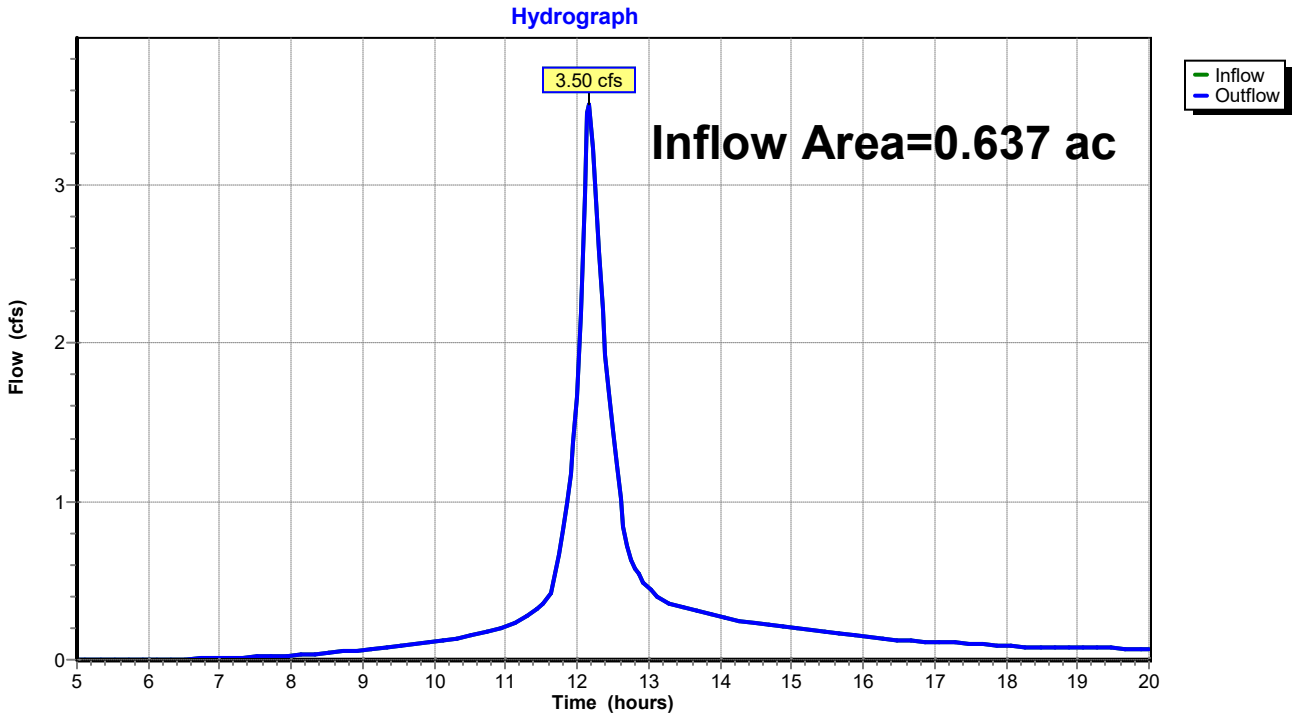

Summary for Reach DP3: Shoreline 3

Inflow Area = 1.461 ac, 1.18% Impervious, Inflow Depth > 5.92" for 100-yr event
Inflow = 10.05 cfs @ 12.10 hrs, Volume= 0.721 af
Outflow = 10.05 cfs @ 12.10 hrs, Volume= 0.721 af, Atten= 0%, Lag= 0.0 min
Routed to Reach SP1 : SACO RIVER / OCEAN

Routing by Stor-Ind+Trans method, Time Span= 5.00-20.00 hrs, dt= 0.05 hrs

Reach DP3: Shoreline 3

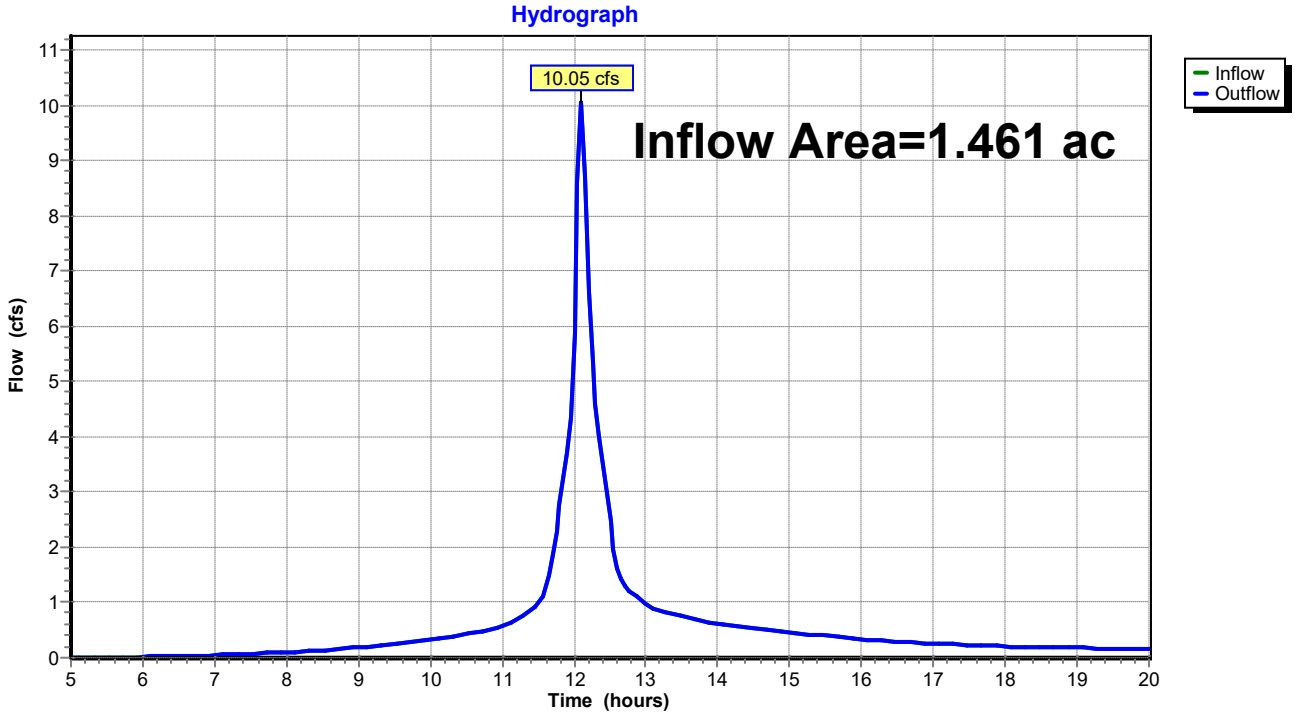

Summary for Reach SP1: SACO RIVER / OCEAN

Inflow Area = 2.557 ac, 0.67% Impervious, Inflow Depth > 5.77" for 100-yr event
Inflow = 15.89 cfs @ 12.10 hrs, Volume= 1.229 af
Outflow = 15.89 cfs @ 12.10 hrs, Volume= 1.229 af, Atten= 0%, Lag= 0.0 min

Routing by Stor-Ind+Trans method, Time Span= 5.00-20.00 hrs, dt= 0.05 hrs

Reach SP1: SACO RIVER / OCEAN

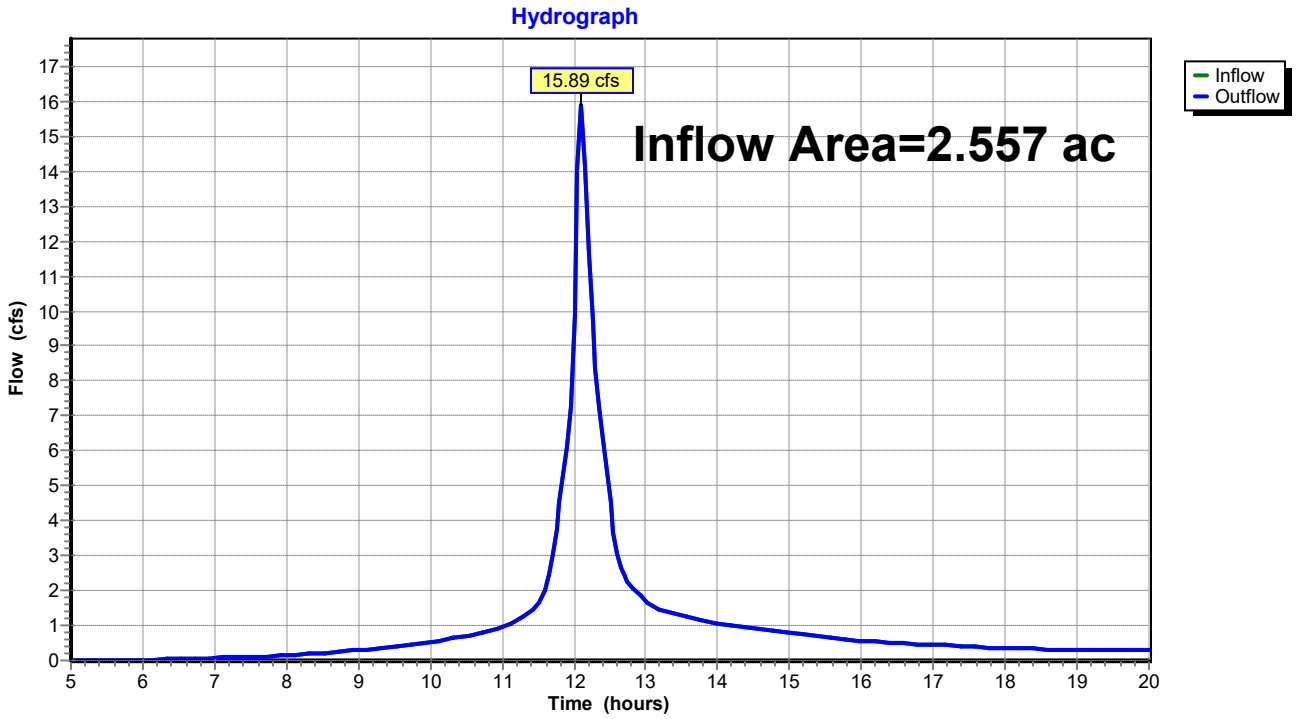

TABLE OF CONTENTS

Project Reports
1 Routing Diagram
2 Project Notes
3 Rainfall Events Listing
4 Area Listing (all nodes)
5 Soil Listing (all nodes)
6 Ground Covers (all nodes)

2-yr Event
7 Node Listing
8 Subcat 1S: Pre Subcatchment 1
9 Subcat 2S: Pre Subcatchment 2
10 Subcat 3S: Pre Subcatchment 3
12 Reach DP1: Shoreline 1
13 Reach DP2: Shoreline 2
14 Reach DP3: Shoreline 3
15 Reach SP1: SACO RIVER / OCEAN

10-yr Event
16 Node Listing
17 Subcat 1S: Pre Subcatchment 1
18 Subcat 2S: Pre Subcatchment 2
19 Subcat 3S: Pre Subcatchment 3
21 Reach DP1: Shoreline 1
22 Reach DP2: Shoreline 2
23 Reach DP3: Shoreline 3
24 Reach SP1: SACO RIVER / OCEAN

25-yr Event
25 Node Listing
26 Subcat 1S: Pre Subcatchment 1
27 Subcat 2S: Pre Subcatchment 2
28 Subcat 3S: Pre Subcatchment 3
30 Reach DP1: Shoreline 1
31 Reach DP2: Shoreline 2
32 Reach DP3: Shoreline 3
33 Reach SP1: SACO RIVER / OCEAN

100-yr Event
34 Node Listing
35 Subcat 1S: Pre Subcatchment 1
36 Subcat 2S: Pre Subcatchment 2
37 Subcat 3S: Pre Subcatchment 3
39 Reach DP1: Shoreline 1
40 Reach DP2: Shoreline 2
41 Reach DP3: Shoreline 3

42 Reach SP1: SACO RIVER / OCEAN

Appendix C

Post Development HydroCAD Calculations

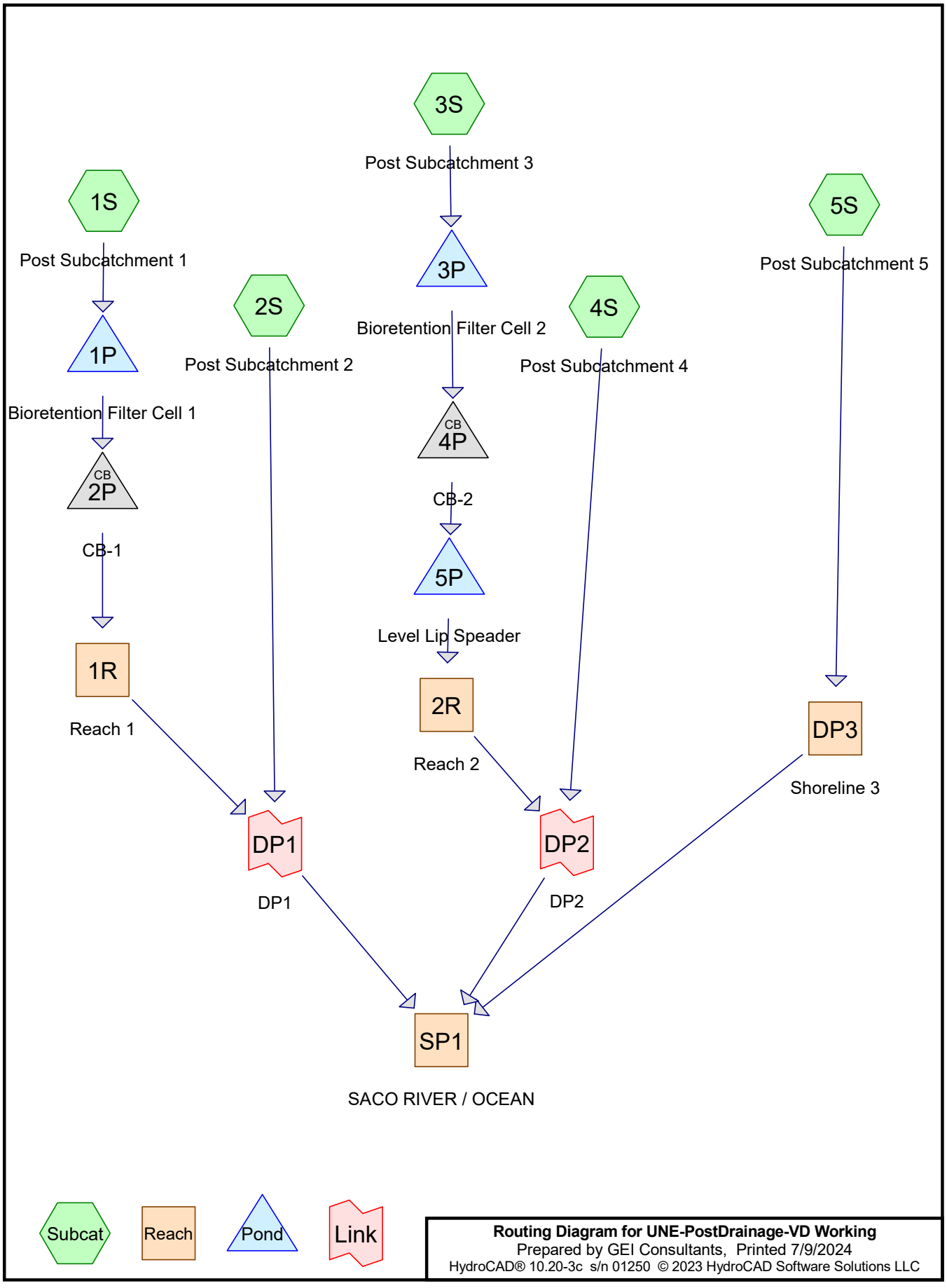
3S
Post Subcatchment 3
1S
Post Subcatchment 1
5S
Post Subcatchment 5
3P
2S
Post Subcatchment 2
4S
Post Subcatchment 4
Bioretention Filter Cell 2
1P
Bioretention Filter Cell 1
CB
4P
CB
2P
CB-2
CB-1
5P
Level Lip Spreader
1R
2R
DP3
Reach 1
Reach 2
Shoreline 3
DP1
DP2
DP1
DP2
SP1
SACO RIVER / OCEAN
Subcat
Reach
Pond
Link
Routing Diagram for UNE-PostDrainage-VD Working
Prepared by GEI Consultants, Printed 7/9/2024
HydroCAD® 10.20-3c s/n 01250 © 2023 HydroCAD Software Solutions LLC

Project Notes

Defined 3 rainfall events from ME-York IDF

Rainfall Events Listing

Event#	Event Name	Storm Type	Curve	Mode	Duration (hours)	B/B	Depth (inches)	AMC
1	2-yr	Type III 24-hr		Default	24.00	1	3.30	2
2	10-yr	Type III 24-hr		Default	24.00	1	4.90	2
3	25-yr	Type III 24-hr		Default	24.00	1	6.20	2
4	100-yr	Type III 24-hr		Default	24.00	1	8.70	2
5	WQ	Type III 24-hr		Default	24.00	1	1.00	2

Area Listing (all nodes)

Area (acres)	CN	Description (subcatchment-numbers)
0.081	80	>75% Grass cover, Good, HSG D (1S, 3S, 4S)
0.013	73	Biofiltration cell, Good, HSG D (3S)
0.020	73	Bioretention Filter Cell, Good, HSG D (1S)
0.089	96	Gravel surface, HSG D (5S)
0.039	98	Ledge, HSG D (1S, 3S)
0.090	98	Paved Access Drive, HSG D (1S)
0.038	98	Paved acccess drive, HSG D (5S)
0.093	98	Paved access drive, HSG D (3S, 4S)
0.028	98	Paved parking, HSG D (2S)
0.017	98	Roofs, HSG D (5S)
0.160	88	Sand beach, HSG D (5S)
0.362	79	Woods, Fair, HSG D (4S)
1.526	77	Woods, Good, HSG D (1S, 2S, 3S, 5S)
2.557	**81**	**TOTAL AREA**

Soil Listing (all nodes)

Area (acres)	Soil Group	Subcatchment Numbers
0.000	HSG A	
0.000	HSG B	
0.000	HSG C	
2.557	HSG D	1S, 2S, 3S, 4S, 5S
0.000	Other	
2.557		**TOTAL AREA**

Ground Covers (all nodes)

HSG-A (acres)	HSG-B (acres)	HSG-C (acres)	HSG-D (acres)	Other (acres)	Total (acres)	Ground Cover	Subcatchment Numbers
0.000	0.000	0.000	0.081	0.000	0.081	>75% Grass cover, Good	1S, 3S, 4S
0.000	0.000	0.000	0.013	0.000	0.013	Biofiltration cell, Good	3S
0.000	0.000	0.000	0.020	0.000	0.020	Bioretention Filter Cell, Good	1S
0.000	0.000	0.000	0.089	0.000	0.089	Gravel surface	5S
0.000	0.000	0.000	0.039	0.000	0.039	Ledge	1S, 3S
0.000	0.000	0.000	0.090	0.000	0.090	Paved Access Drive	1S
0.000	0.000	0.000	0.038	0.000	0.038	Paved acccess drive	5S
0.000	0.000	0.000	0.093	0.000	0.093	Paved access drive	3S, 4S
0.000	0.000	0.000	0.028	0.000	0.028	Paved parking	2S
0.000	0.000	0.000	0.017	0.000	0.017	Roofs	5S
0.000	0.000	0.000	0.160	0.000	0.160	Sand beach	5S
0.000	0.000	0.000	0.362	0.000	0.362	Woods, Fair	4S
0.000	0.000	0.000	1.526	0.000	1.526	Woods, Good	1S, 2S, 3S, 5S
0.000	**0.000**	**0.000**	**2.557**	**0.000**	**2.557**	**TOTAL AREA**	

Pipe Listing (all nodes)

Line#	Node Number	In-Invert (feet)	Out-Invert (feet)	Length (feet)	Slope (ft/ft)	n	Width (inches)	Diam/Height (inches)	Inside-Fill (inches)	Node Name
1	2P	13.75	12.00	48.0	0.0365	0.013	0.0	15.0	0.0	
2	4P	18.75	18.00	40.0	0.0187	0.013	0.0	18.0	0.0	

Time span=5.00-20.00 hrs, dt=0.05 hrs, 301 points
Runoff by SCS TR-20 method, UH=SCS, Weighted-CN
Reach routing by Stor-Ind method - Pond routing by Stor-Ind method

Subcatchment 1S: Post Subcatchment 1 Runoff Area=9,832 sf 50.01% Impervious Runoff Depth>1.88"
Flow Length=172' Tc=0.8 min CN=87 Runoff=0.59 cfs 0.035 af

Subcatchment 2S: Post Subcatchment 2 Runoff Area=11,488 sf 10.78% Impervious Runoff Depth>1.30"
Flow Length=133' Tc=3.4 min CN=79 Runoff=0.46 cfs 0.029 af

Subcatchment 3S: Post Subcatchment 3 Runoff Area=13,365 sf 33.49% Impervious Runoff Depth>1.65"
Flow Length=262' Tc=4.9 min CN=84 Runoff=0.64 cfs 0.042 af

Subcatchment 4S: Post Subcatchment 4 Runoff Area=17,529 sf 1.68% Impervious Runoff Depth>1.30"
Flow Length=126' Tc=7.2 min CN=79 Runoff=0.62 cfs 0.044 af

Subcatchment 5S: Post Subcatchment 5 Runoff Area=59,179 sf 4.06% Impervious Runoff Depth>1.37"
Flow Length=445' Tc=7.0 min CN=80 Runoff=2.23 cfs 0.155 af

Reach 1R: Reach 1 Inflow=0.58 cfs 0.034 af
Outflow=0.58 cfs 0.034 af

Reach 2R: Reach 2 Inflow=0.61 cfs 0.038 af
Outflow=0.61 cfs 0.038 af

Reach DP3: Shoreline 3 Inflow=2.23 cfs 0.155 af
Outflow=2.23 cfs 0.155 af

Reach SP1: SACO RIVER / OCEAN Inflow=4.22 cfs 0.300 af
Outflow=4.22 cfs 0.300 af

Pond 1P: Bioretention Filter Cell 1 Peak Elev=18.11' Storage=79 cf Inflow=0.59 cfs 0.035 af
Outflow=0.58 cfs 0.034 af

Pond 2P: CB-1 Peak Elev=14.15' Inflow=0.58 cfs 0.034 af
15.0" Round Culvert n=0.013 L=48.0' S=0.0365 '/' Outflow=0.58 cfs 0.034 af

Pond 3P: Bioretention Filter Cell 2 Peak Elev=23.62' Storage=64 cf Inflow=0.64 cfs 0.042 af
Outflow=0.64 cfs 0.041 af

Pond 4P: CB-2 Peak Elev=19.15' Inflow=0.64 cfs 0.041 af
18.0" Round Culvert n=0.013 L=40.0' S=0.0187 '/' Outflow=0.64 cfs 0.041 af

Pond 5P: Level Lip Speader Peak Elev=18.00' Storage=115 cf Inflow=0.64 cfs 0.041 af
Outflow=0.61 cfs 0.038 af

Link DP1: DP1 Inflow=1.02 cfs 0.063 af
Primary=1.02 cfs 0.063 af

Link DP2: DP2 Inflow=1.24 cfs 0.082 af
Primary=1.24 cfs 0.082 af

Total Runoff Area = 2.557 ac Runoff Volume = 0.305 af Average Runoff Depth = 1.43"
88.04% Pervious = 2.251 ac 11.96% Impervious = 0.306 ac

Summary for Subcatchment 1S: Post Subcatchment 1

Runoff = 0.59 cfs @ 12.01 hrs, Volume= 0.035 af, Depth> 1.88"
Routed to Pond 1P : Bioretention Filter Cell 1

Runoff by SCS TR-20 method, UH=SCS, Weighted-CN, Time Span= 5.00-20.00 hrs, dt= 0.05 hrs
Type III 24-hr 2-yr Rainfall=3.30"

	Area (sf)	CN	Description
	3,430	77	Woods, Good, HSG D
*	982	98	Ledge, HSG D
	595	80	>75% Grass cover, Good, HSG D
*	3,935	98	Paved Access Drive, HSG D
*	890	73	Bioretention Filter Cell, Good, HSG D
	9,832	87	Weighted Average
	4,915		49.99% Pervious Area
	4,917		50.01% Impervious Area

Tc (min)	Length (feet)	Slope (ft/ft)	Velocity (ft/sec)	Capacity (cfs)	Description
0.4	46	0.0500	1.73		**Sheet Flow, Tc-1** Smooth surfaces n= 0.011 P2= 3.30"
0.3	102	0.0500	5.25	15.74	**Channel Flow, Tc-2** Area= 3.0 sf Perim= 9.2' r= 0.33' n= 0.030 Earth, grassed & winding
0.1	24	0.0625	3.75		**Shallow Concentrated Flow, Tc-3** Grassed Waterway Kv= 15.0 fps
0.8	172	Total			

Subcatchment 1S: Post Subcatchment 1

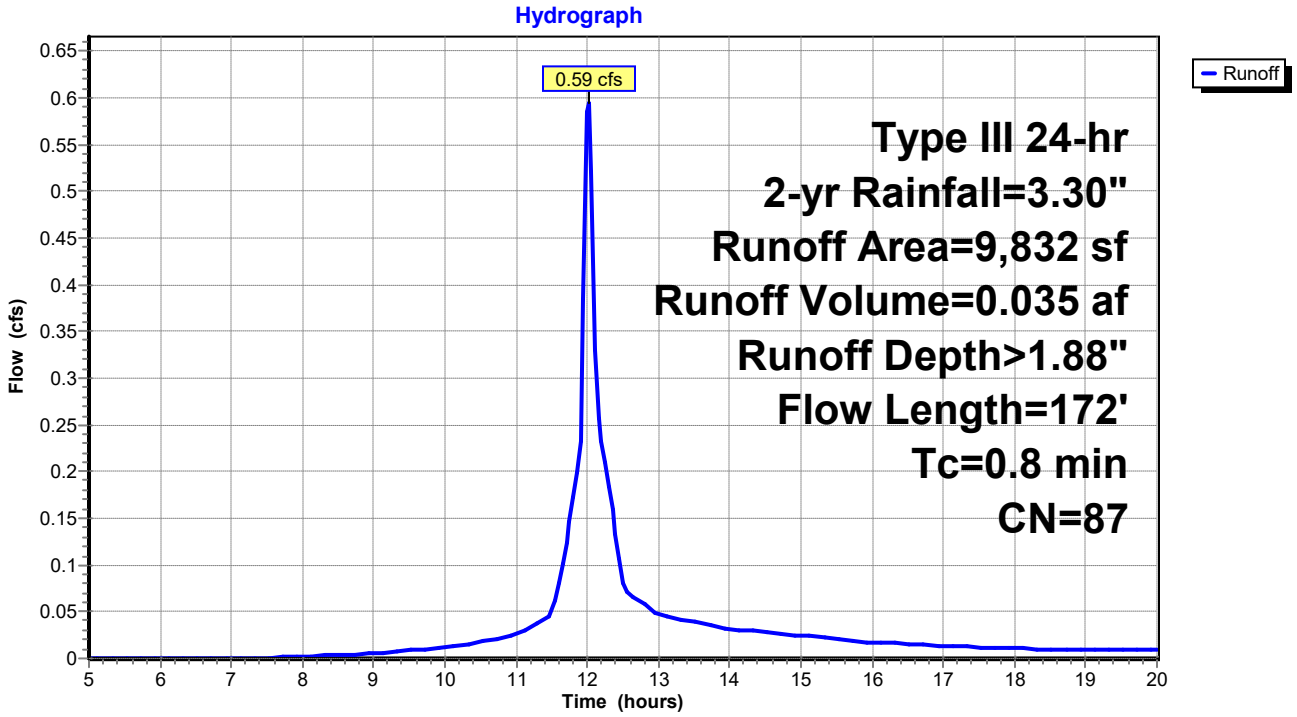

Summary for Subcatchment 2S: Post Subcatchment 2

Runoff = 0.46 cfs @ 12.06 hrs, Volume= 0.029 af, Depth> 1.30"
Routed to Link DP1 : DP1

Runoff by SCS TR-20 method, UH=SCS, Weighted-CN, Time Span= 5.00-20.00 hrs, dt= 0.05 hrs
Type III 24-hr 2-yr Rainfall=3.30"

Area (sf)	CN	Description
10,250	77	Woods, Good, HSG D
1,238	98	Paved parking, HSG D
11,488	79	Weighted Average
10,250		89.22% Pervious Area
1,238		10.78% Impervious Area

Tc (min)	Length (feet)	Slope (ft/ft)	Velocity (ft/sec)	Capacity (cfs)	Description
2.5	21	0.1905	0.14		**Sheet Flow, Tc-1** Woods: Light underbrush n= 0.400 P2= 3.30"
0.9	112	0.1696	2.06		**Shallow Concentrated Flow, Tc-2** Woodland Kv= 5.0 fps
3.4	133	Total			

Subcatchment 2S: Post Subcatchment 2

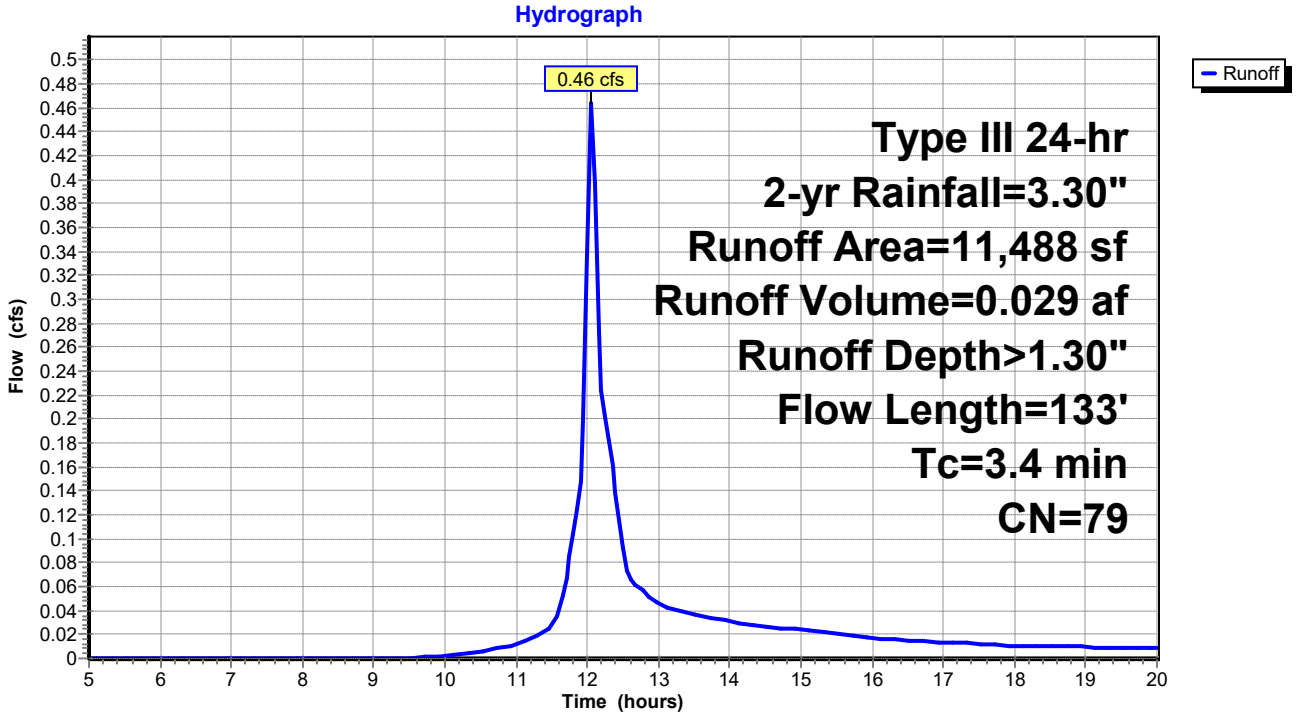

Summary for Subcatchment 3S: Post Subcatchment 3

Runoff = 0.64 cfs @ 12.08 hrs, Volume= 0.042 af, Depth> 1.65"
Routed to Pond 3P : Bioretention Filter Cell 2

Runoff by SCS TR-20 method, UH=SCS, Weighted-CN, Time Span= 5.00-20.00 hrs, dt= 0.05 hrs
Type III 24-hr 2-yr Rainfall=3.30"

	Area (sf)	CN	Description
	6,822	77	Woods, Good, HSG D
*	580	73	Biofiltration cell, Good, HSG D
*	3,768	98	Paved access drive, HSG D
	1,487	80	>75% Grass cover, Good, HSG D
*	708	98	Ledge, HSG D
	13,365	84	Weighted Average
	8,889		66.51% Pervious Area
	4,476		33.49% Impervious Area

Tc (min)	Length (feet)	Slope (ft/ft)	Velocity (ft/sec)	Capacity (cfs)	Description
4.2	43	0.2093	0.17		**Sheet Flow, Tc-1** Woods: Light underbrush n= 0.400 P2= 3.30"
0.7	214	0.0500	5.25	15.74	**Channel Flow, Tc-2** Area= 3.0 sf Perim= 9.2' r= 0.33' n= 0.030 Earth, grassed & winding
0.0	5	0.0500	3.35		**Shallow Concentrated Flow, Tc-3** Grassed Waterway Kv= 15.0 fps
4.9	262	Total			

Subcatchment 3S: Post Subcatchment 3

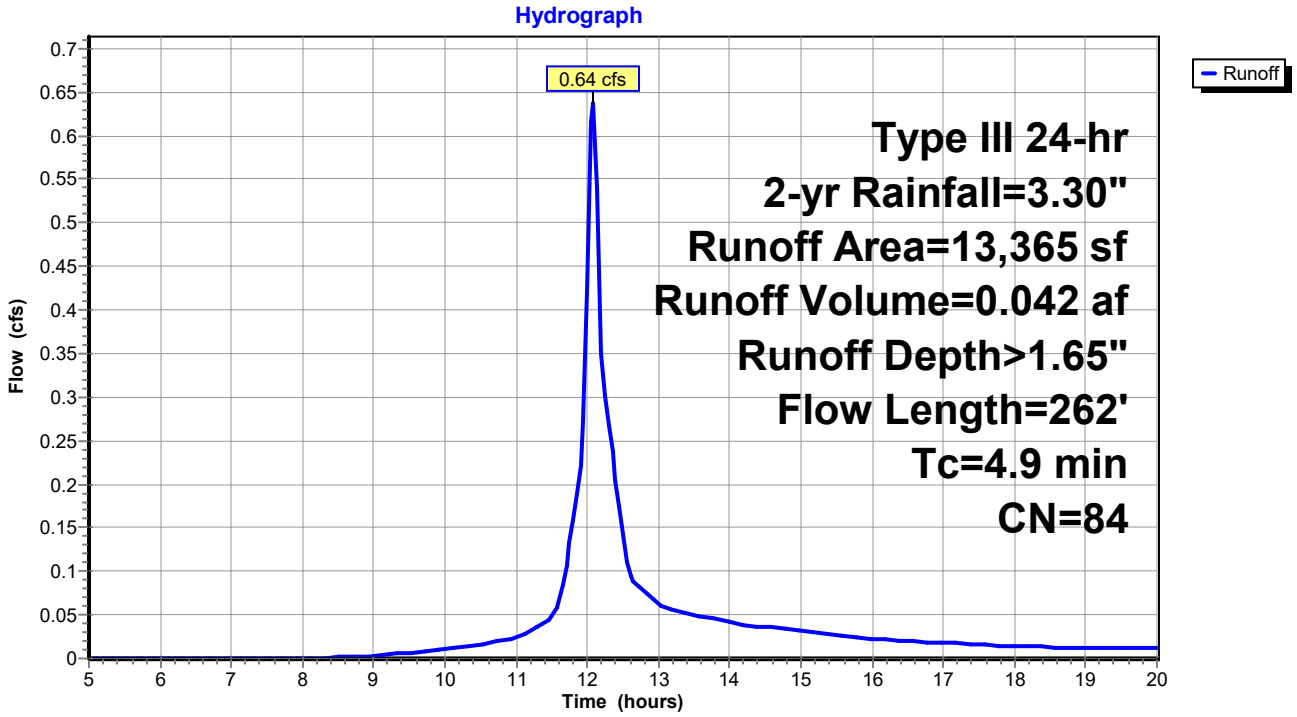

Summary for Subcatchment 4S: Post Subcatchment 4

Runoff = 0.62 cfs @ 12.11 hrs, Volume= 0.044 af, Depth> 1.30"
Routed to Link DP2 : DP2

Runoff by SCS TR-20 method, UH=SCS, Weighted-CN, Time Span= 5.00-20.00 hrs, dt= 0.05 hrs
Type III 24-hr 2-yr Rainfall=3.30"

	Area (sf)	CN	Description
*	295	98	Paved access drive, HSG D
	1,450	80	>75% Grass cover, Good, HSG D
	15,784	79	Woods, Fair, HSG D
	17,529	79	Weighted Average
	17,234		98.32% Pervious Area
	295		1.68% Impervious Area

Tc (min)	Length (feet)	Slope (ft/ft)	Velocity (ft/sec)	Capacity (cfs)	Description
6.8	62	0.1290	0.15		**Sheet Flow, Tc-1** Woods: Light underbrush n= 0.400 P2= 3.30"
0.4	64	0.2343	2.42		**Shallow Concentrated Flow, Tc-2** Woodland Kv= 5.0 fps
7.2	126	Total			

Subcatchment 4S: Post Subcatchment 4

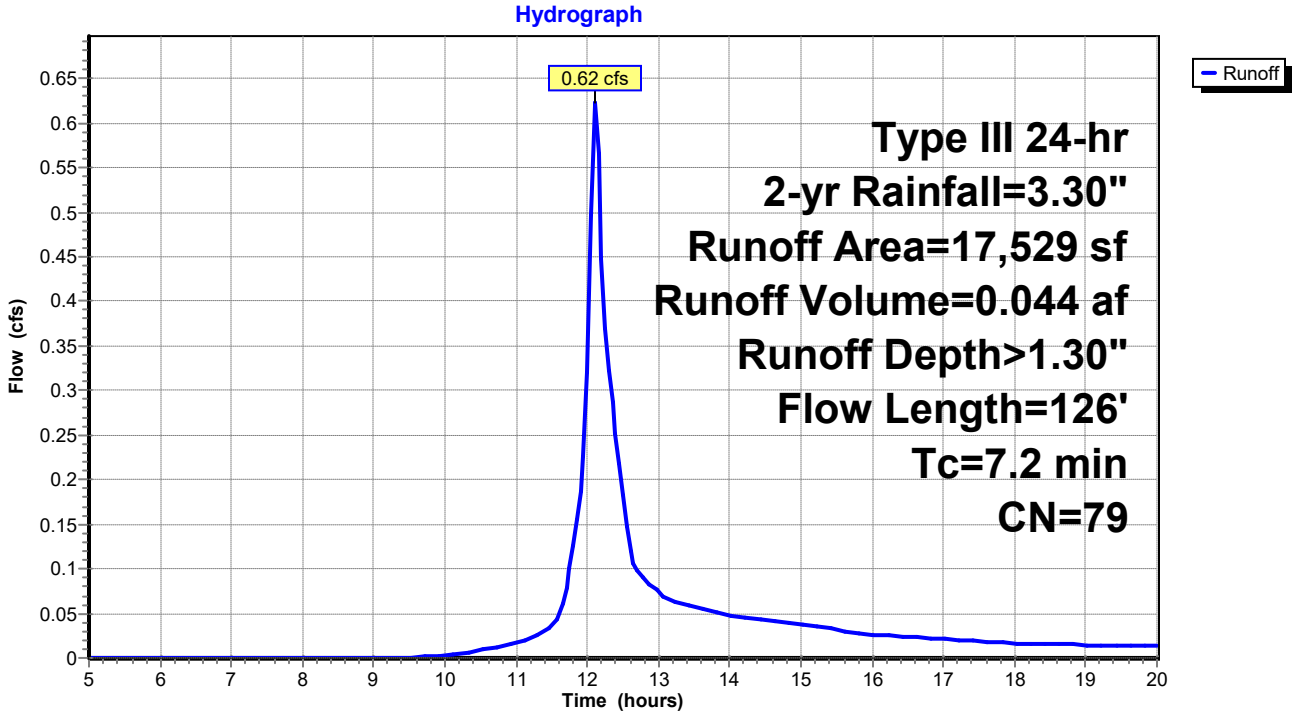

Summary for Subcatchment 5S: Post Subcatchment 5

Runoff = 2.23 cfs @ 12.11 hrs, Volume= 0.155 af, Depth> 1.37"
Routed to Reach DP3 : Shoreline 3

Runoff by SCS TR-20 method, UH=SCS, Weighted-CN, Time Span= 5.00-20.00 hrs, dt= 0.05 hrs
Type III 24-hr 2-yr Rainfall=3.30"

	Area (sf)	CN	Description
*	1,650	98	Paved acccess drive, HSG D
	751	98	Roofs, HSG D
*	6,955	88	Sand beach, HSG D
	3,872	96	Gravel surface, HSG D
	45,951	77	Woods, Good, HSG D
	59,179	80	Weighted Average
	56,778		95.94% Pervious Area
	2,401		4.06% Impervious Area

Tc (min)	Length (feet)	Slope (ft/ft)	Velocity (ft/sec)	Capacity (cfs)	Description
2.7	23	0.1740	0.14		**Sheet Flow, Tc-1** Woods: Light underbrush n= 0.400 P2= 3.30"
1.0	70	0.0574	1.20		**Shallow Concentrated Flow, Tc-2** Woodland Kv= 5.0 fps
0.5	170	0.1059	5.24		**Shallow Concentrated Flow, Tc-3** Unpaved Kv= 16.1 fps
2.5	140	0.0357	0.94		**Shallow Concentrated Flow, Tc-4** Woodland Kv= 5.0 fps
0.3	42	0.0714	2.67		**Shallow Concentrated Flow, Tc-5** Nearly Bare & Untilled Kv= 10.0 fps
7.0	445	Total			

Subcatchment 5S: Post Subcatchment 5

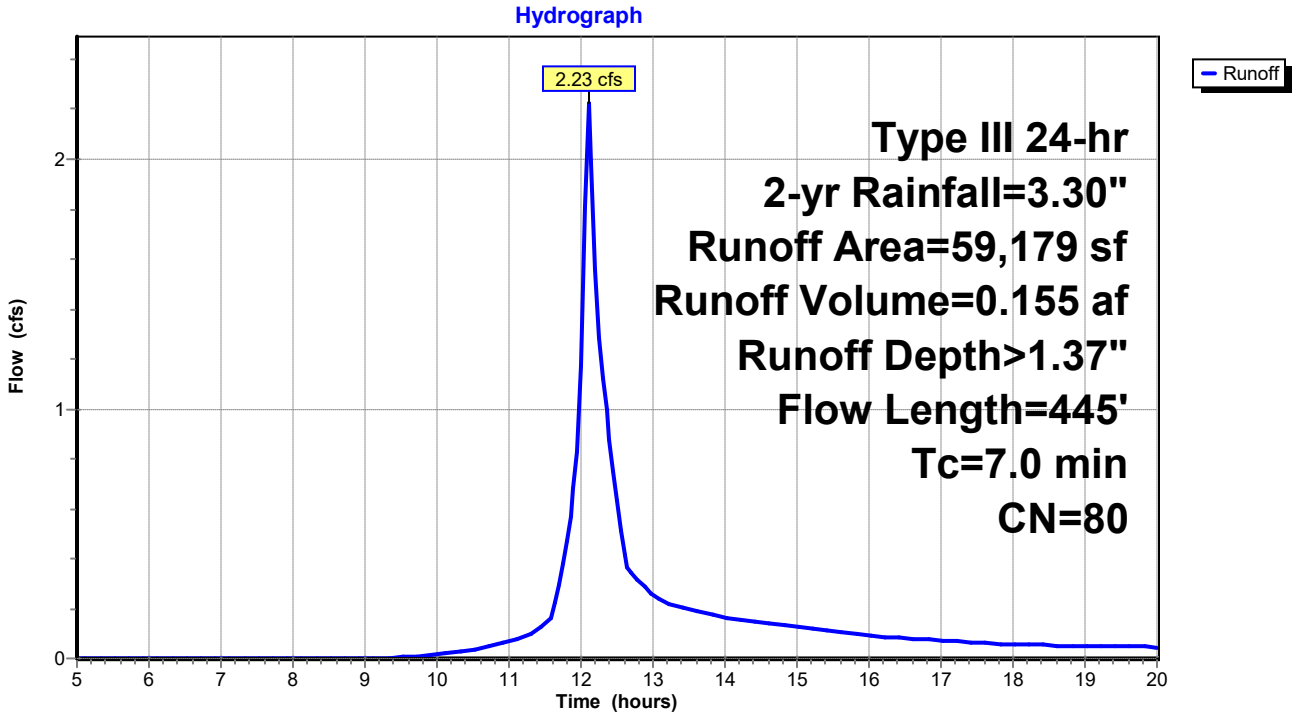

Summary for Reach 1R: Reach 1

Inflow Area = 0.226 ac, 50.01% Impervious, Inflow Depth > 1.81" for 2-yr event
Inflow = 0.58 cfs @ 12.03 hrs, Volume= 0.034 af
Outflow = 0.58 cfs @ 12.03 hrs, Volume= 0.034 af, Atten= 0%, Lag= 0.0 min
Routed to Link DP1 : DP1

Routing by Stor-Ind method, Time Span= 5.00-20.00 hrs, dt= 0.05 hrs

Reach 1R: Reach 1

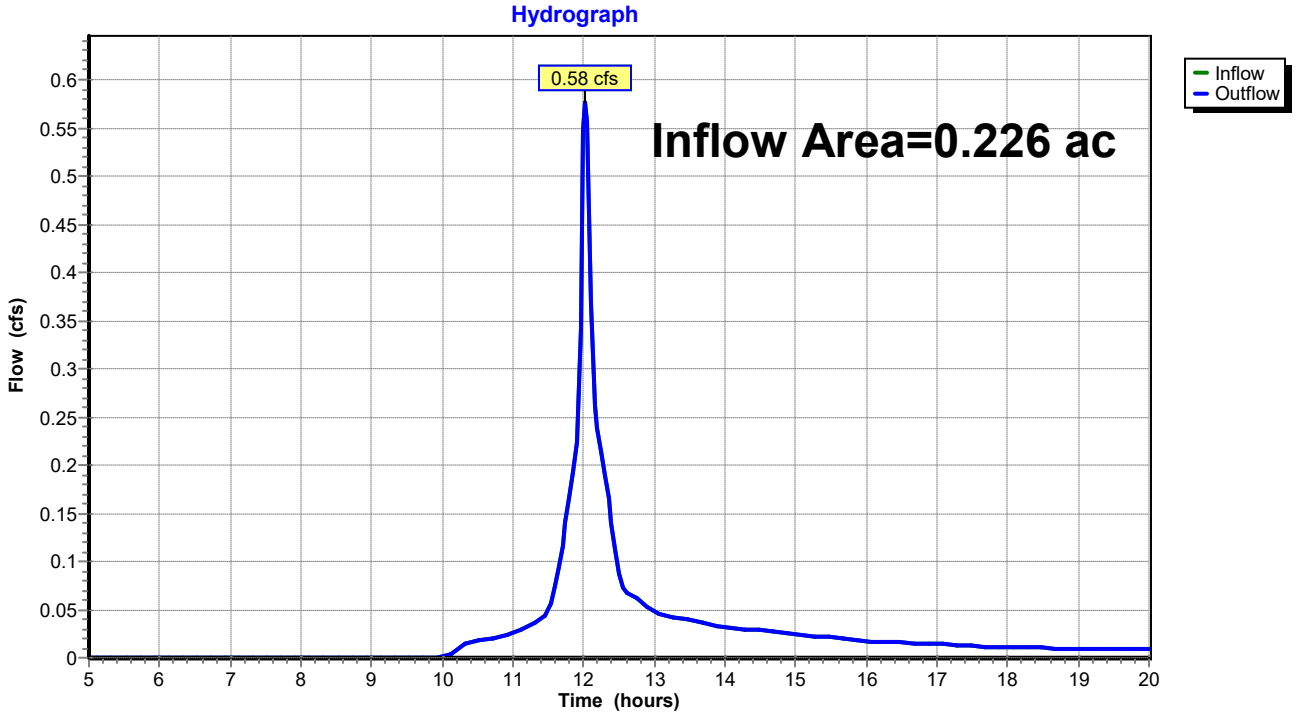

Summary for Reach 2R: Reach 2

Inflow Area = 0.307 ac, 33.49% Impervious, Inflow Depth > 1.50" for 2-yr event
Inflow = 0.61 cfs @ 12.11 hrs, Volume= 0.038 af
Outflow = 0.61 cfs @ 12.11 hrs, Volume= 0.038 af, Atten= 0%, Lag= 0.0 min
Routed to Link DP2 : DP2

Routing by Stor-Ind method, Time Span= 5.00-20.00 hrs, dt= 0.05 hrs

Reach 2R: Reach 2

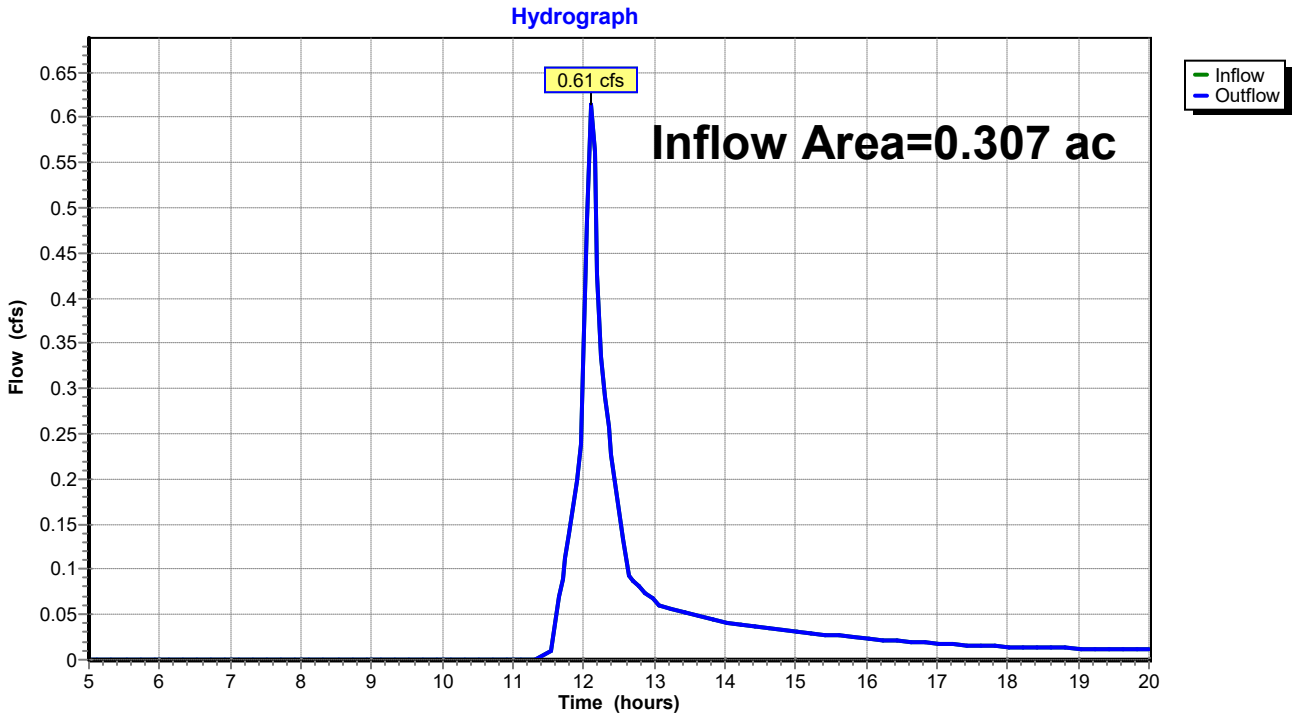

Summary for Reach DP3: Shoreline 3

Inflow Area = 1.359 ac, 4.06% Impervious, Inflow Depth > 1.37" for 2-yr event
Inflow = 2.23 cfs @ 12.11 hrs, Volume= 0.155 af
Outflow = 2.23 cfs @ 12.11 hrs, Volume= 0.155 af, Atten= 0%, Lag= 0.0 min
Routed to Reach SP1 : SACO RIVER / OCEAN

Routing by Stor-Ind method, Time Span= 5.00-20.00 hrs, dt= 0.05 hrs

Reach DP3: Shoreline 3

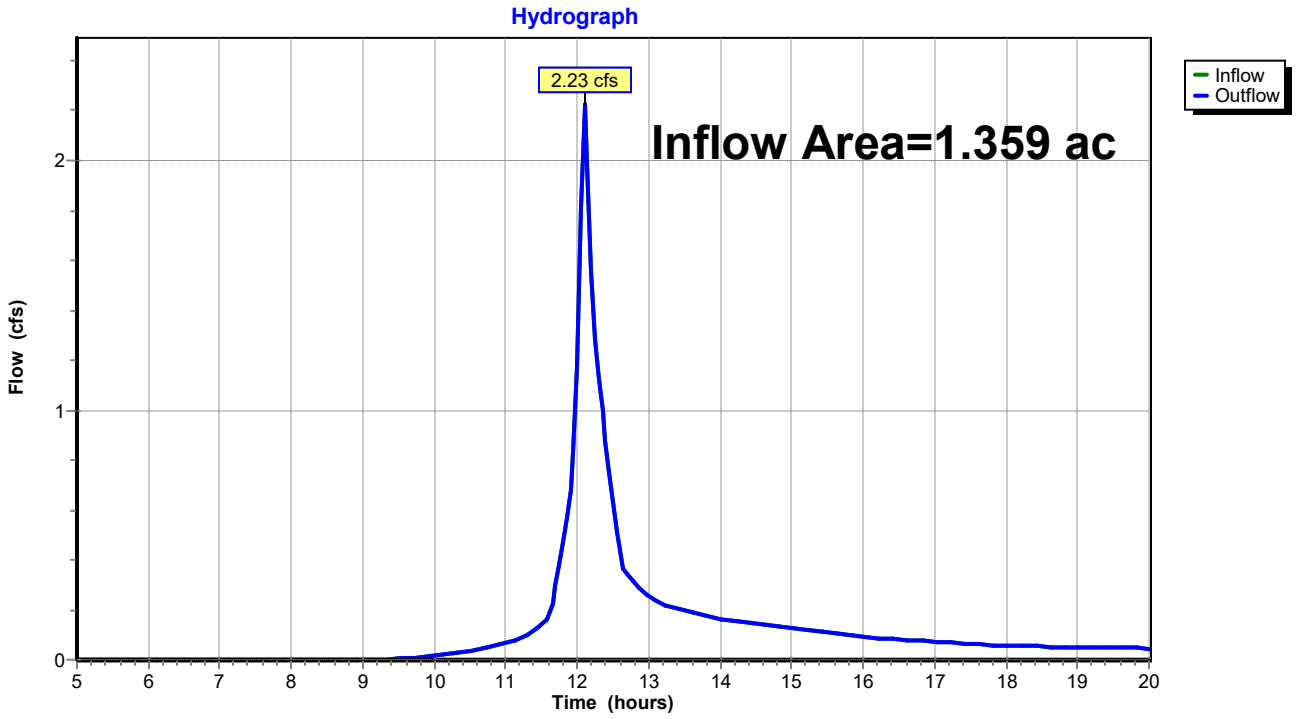

Summary for Reach SP1: SACO RIVER / OCEAN

Inflow Area = 2.557 ac, 11.96% Impervious, Inflow Depth > 1.41" for 2-yr event
Inflow = 4.22 cfs @ 12.10 hrs, Volume= 0.300 af
Outflow = 4.22 cfs @ 12.10 hrs, Volume= 0.300 af, Atten= 0%, Lag= 0.0 min

Routing by Stor-Ind method, Time Span= 5.00-20.00 hrs, dt= 0.05 hrs

Reach SP1: SACO RIVER / OCEAN

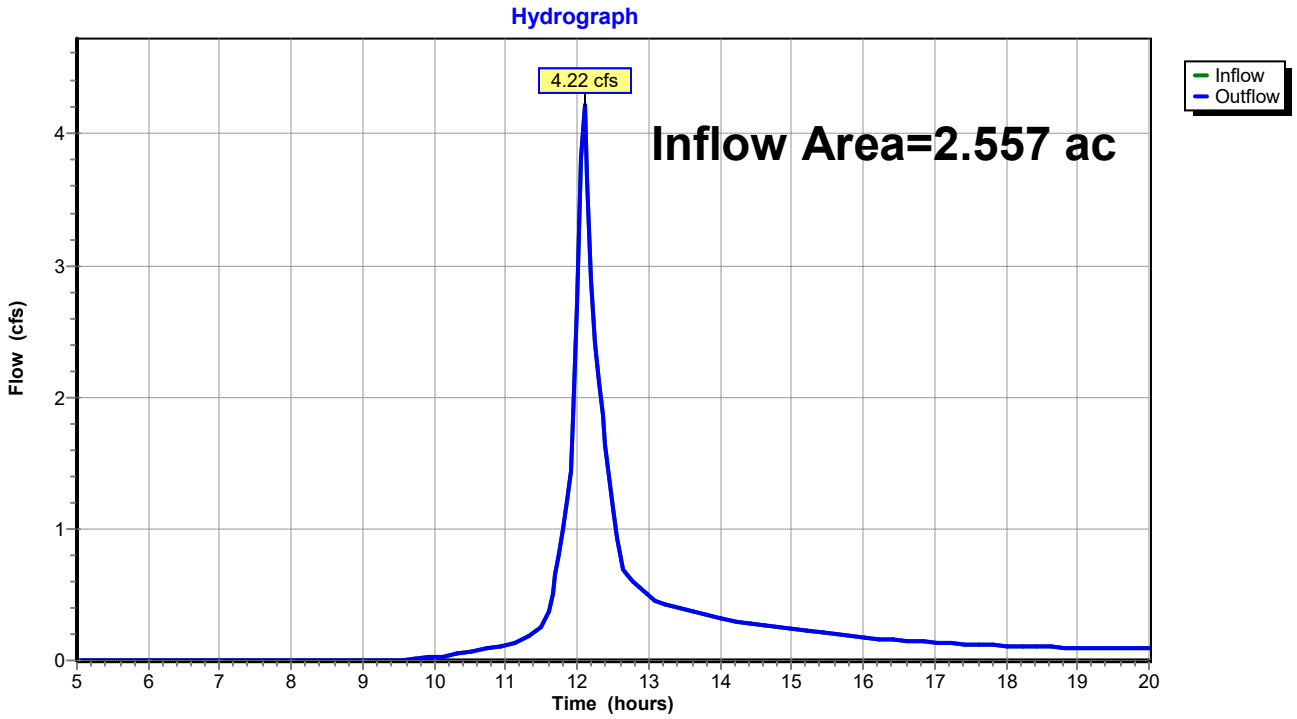

Summary for Pond 1P: Bioretention Filter Cell 1

Inflow Area = 0.226 ac, 50.01% Impervious, Inflow Depth > 1.88" for 2-yr event
Inflow = 0.59 cfs @ 12.01 hrs, Volume= 0.035 af
Outflow = 0.58 cfs @ 12.03 hrs, Volume= 0.034 af, Atten= 3%, Lag= 0.8 min
Primary = 0.58 cfs @ 12.03 hrs, Volume= 0.034 af
Routed to Pond 2P : CB-1

Routing by Stor-Ind method, Time Span= 5.00-20.00 hrs, dt= 0.05 hrs
Peak Elev= 18.11' @ 12.03 hrs Surf.Area= 249 sf Storage= 79 cf

Plug-Flow detention time= 22.5 min calculated for 0.034 af (96% of inflow)
Center-of-Mass det. time= 9.1 min (788.5 - 779.4)

Volume	Invert	Avail.Storage	Storage Description
#1	17.50'	200 cf	**Custom Stage Data (Prismatic)** Listed below (Recalc)

Elevation (feet)	Surf.Area (sq-ft)	Inc.Store (cubic-feet)	Cum.Store (cubic-feet)
17.50	0	0	0
18.00	213	53	53
18.50	372	146	200

Device	Routing	Invert	Outlet Devices
#1	Primary	18.00'	**18.0" Horiz. Orifice/Grate** C= 0.600 in 24.0" Grate (56% open area) Limited to weir flow at low heads

Primary OutFlow Max=0.55 cfs @ 12.03 hrs HW=18.11' (Free Discharge)
↑**1=Orifice/Grate** (Weir Controls 0.55 cfs @ 1.08 fps)

Pond 1P: Bioretention Filter Cell 1

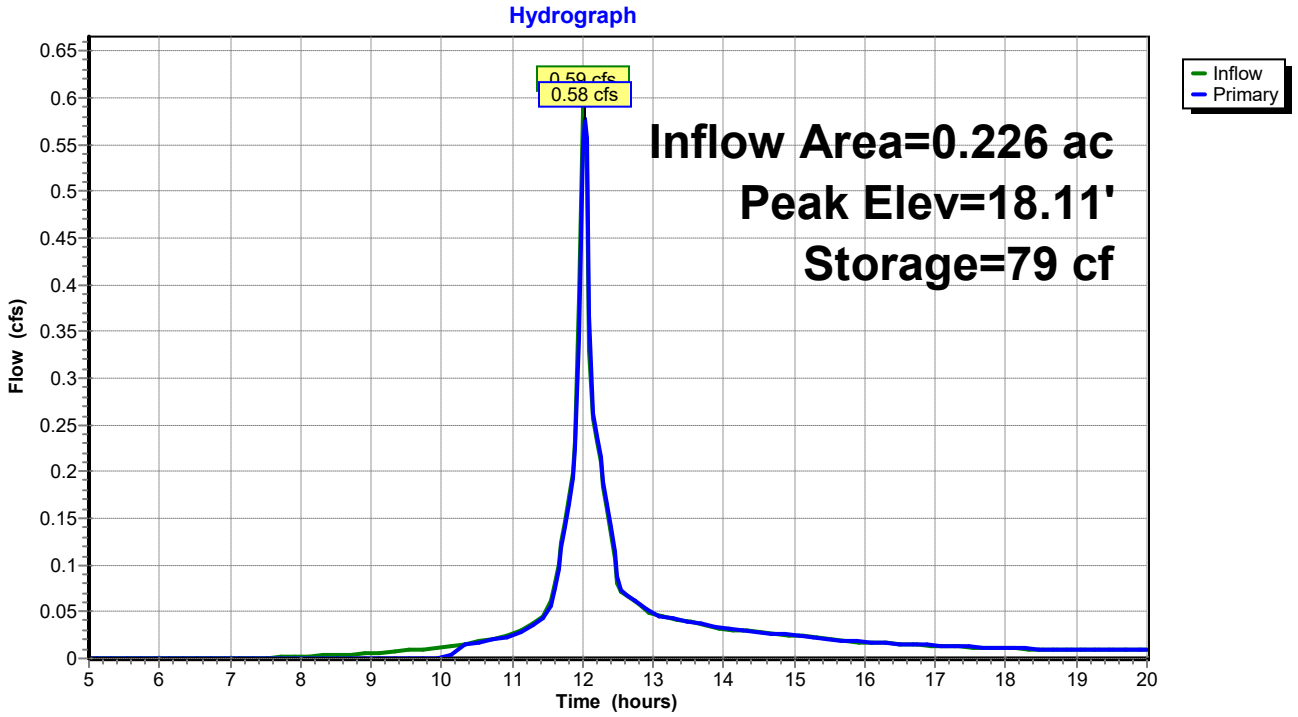

Summary for Pond 2P: CB-1

Inflow Area = 0.226 ac, 50.01% Impervious, Inflow Depth > 1.81" for 2-yr event
Inflow = 0.58 cfs @ 12.03 hrs, Volume= 0.034 af
Outflow = 0.58 cfs @ 12.03 hrs, Volume= 0.034 af, Atten= 0%, Lag= 0.0 min
Primary = 0.58 cfs @ 12.03 hrs, Volume= 0.034 af
Routed to Reach 1R : Reach 1

Routing by Stor-Ind method, Time Span= 5.00-20.00 hrs, dt= 0.05 hrs
Peak Elev= 14.15' @ 12.03 hrs

Device	Routing	Invert	Outlet Devices
#1	Primary	13.75'	**15.0" Round Culvert** L= 48.0' CPP, projecting, no headwall, Ke= 0.900 Inlet / Outlet Invert= 13.75' / 12.00' S= 0.0365 '/' Cc= 0.900 n= 0.013 Corrugated PE, smooth interior, Flow Area= 1.23 sf

Primary OutFlow Max=0.55 cfs @ 12.03 hrs HW=14.14' (Free Discharge)
1=Culvert (Inlet Controls 0.55 cfs @ 1.68 fps)

Pond 2P: CB-1

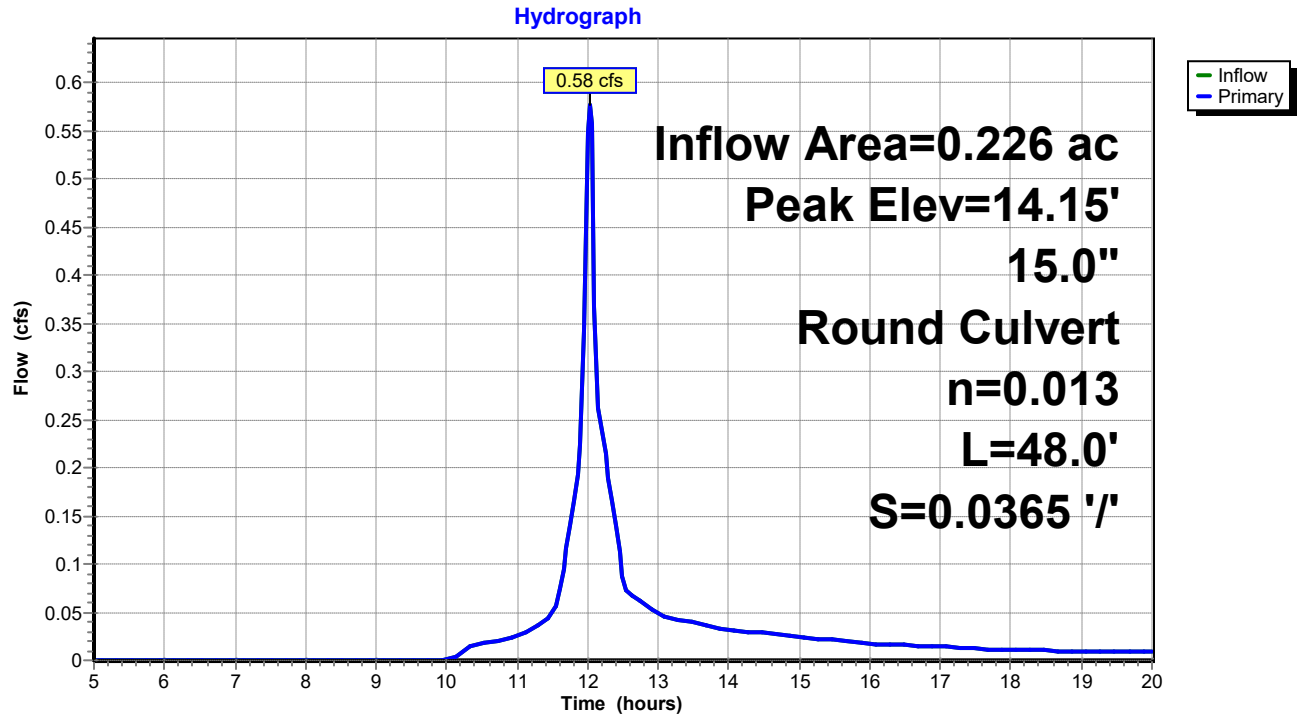

Summary for Pond 3P: Bioretention Filter Cell 2

Inflow Area = 0.307 ac, 33.49% Impervious, Inflow Depth > 1.65" for 2-yr event
Inflow = 0.64 cfs @ 12.08 hrs, Volume= 0.042 af
Outflow = 0.64 cfs @ 12.09 hrs, Volume= 0.041 af, Atten= 0%, Lag= 0.7 min
Primary = 0.64 cfs @ 12.09 hrs, Volume= 0.041 af
Routed to Pond 4P : CB-2

Routing by Stor-Ind method, Time Span= 5.00-20.00 hrs, dt= 0.05 hrs
Peak Elev= 23.62' @ 12.09 hrs Surf.Area= 208 sf Storage= 64 cf

Plug-Flow detention time= 14.5 min calculated for 0.041 af (97% of inflow)
Center-of-Mass det. time= 5.7 min (797.0 - 791.3)

Volume	Invert	Avail.Storage	Storage Description
#1	23.00'	380 cf	**Custom Stage Data (Prismatic)** Listed below (Recalc)

Elevation (feet)	Surf.Area (sq-ft)	Inc.Store (cubic-feet)	Cum.Store (cubic-feet)
23.00	0	0	0
24.00	335	168	168
24.50	515	213	380

Device	Routing	Invert	Outlet Devices
#1	Primary	23.50'	**18.0" Horiz. Orifice/Grate** C= 0.600 in 24.0" Grate (56% open area) Limited to weir flow at low heads

Primary OutFlow Max=0.62 cfs @ 12.09 hrs HW=23.62' (Free Discharge)
↑**1=Orifice/Grate** (Weir Controls 0.62 cfs @ 1.12 fps)

Pond 3P: Bioretention Filter Cell 2

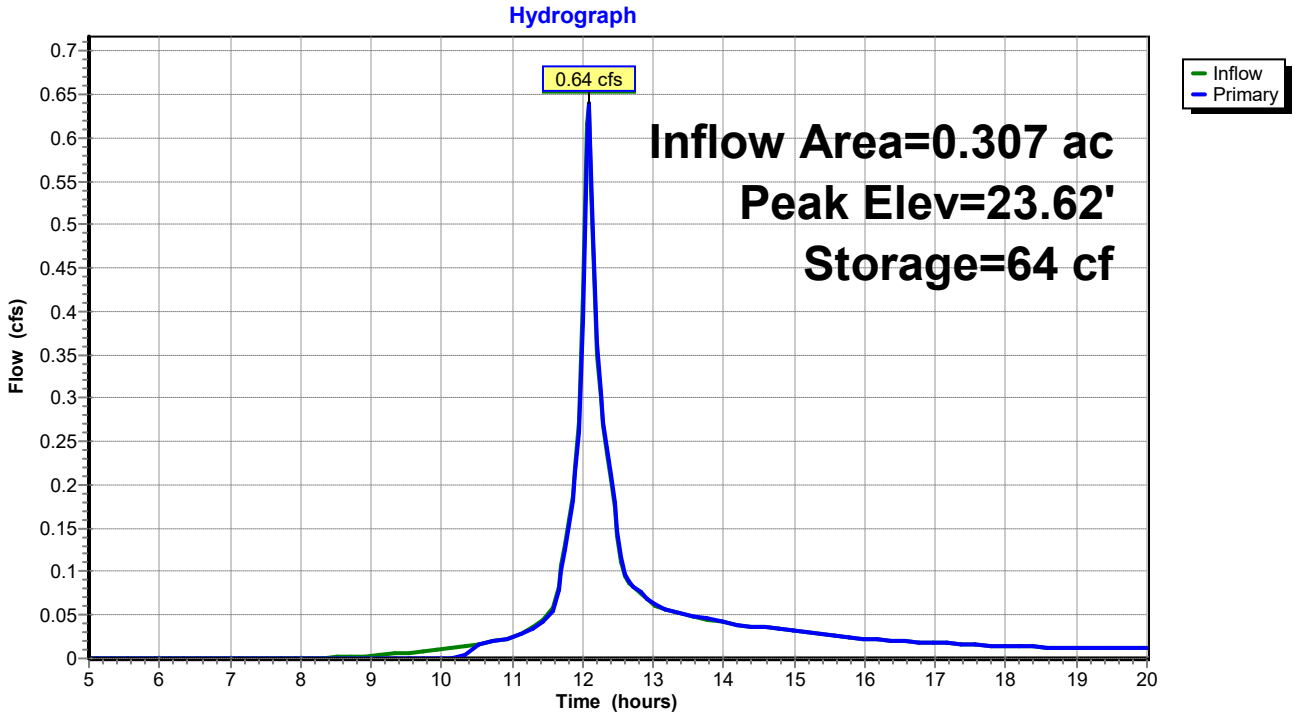

Summary for Pond 4P: CB-2

Inflow Area = 0.307 ac, 33.49% Impervious, Inflow Depth > 1.61" for 2-yr event
Inflow = 0.64 cfs @ 12.09 hrs, Volume= 0.041 af
Outflow = 0.64 cfs @ 12.09 hrs, Volume= 0.041 af, Atten= 0%, Lag= 0.0 min
Primary = 0.64 cfs @ 12.09 hrs, Volume= 0.041 af
Routed to Pond 5P : Level Lip Speader

Routing by Stor-Ind method, Time Span= 5.00-20.00 hrs, dt= 0.05 hrs
Peak Elev= 19.15' @ 12.09 hrs

Device	Routing	Invert	Outlet Devices
#1	Primary	18.75'	**18.0" Round Culvert** L= 40.0' CPP, projecting, no headwall, Ke= 0.900 Inlet / Outlet Invert= 18.75' / 18.00' S= 0.0187 '/' Cc= 0.900 n= 0.013 Corrugated PE, smooth interior, Flow Area= 1.77 sf

Primary OutFlow Max=0.62 cfs @ 12.09 hrs HW=19.14' (Free Discharge)
1=Culvert (Inlet Controls 0.62 cfs @ 1.69 fps)

Pond 4P: CB-2

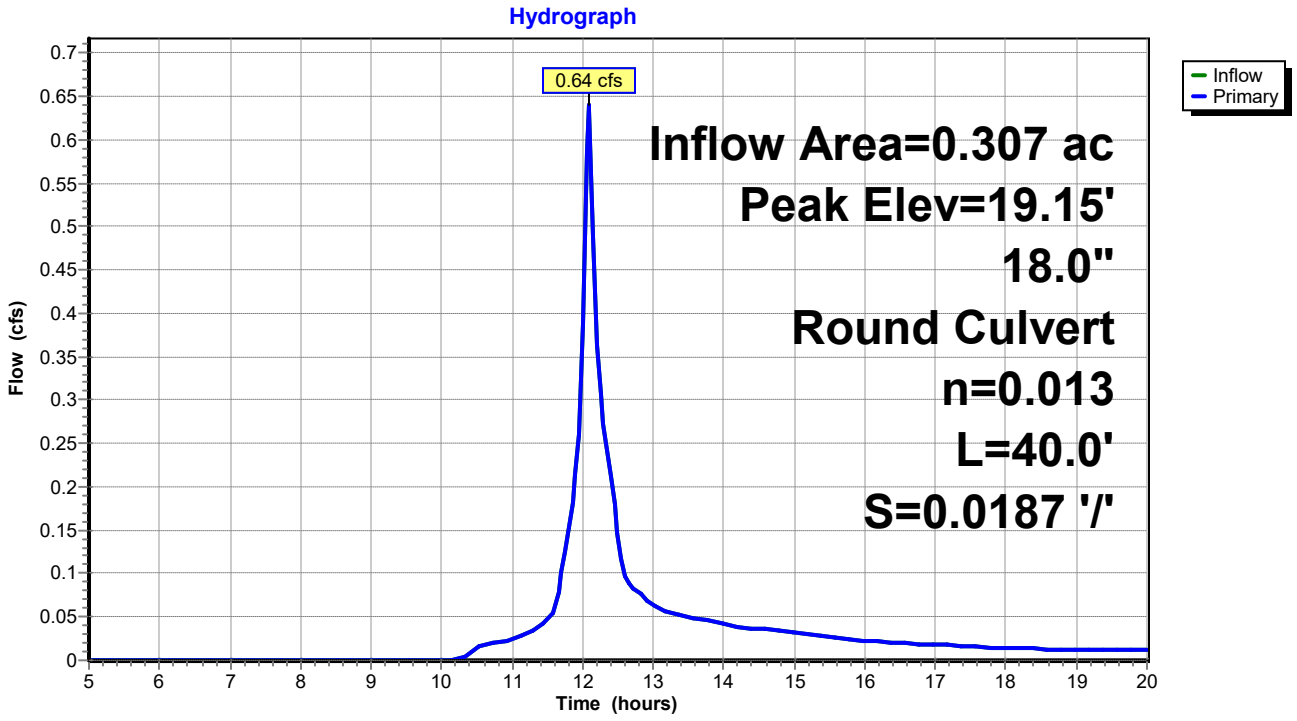

Summary for Pond 5P: Level Lip Speader

Inflow Area = 0.307 ac, 33.49% Impervious, Inflow Depth > 1.61" for 2-yr event
Inflow = 0.64 cfs @ 12.09 hrs, Volume= 0.041 af
Outflow = 0.61 cfs @ 12.11 hrs, Volume= 0.038 af, Atten= 4%, Lag= 1.4 min
Primary = 0.61 cfs @ 12.11 hrs, Volume= 0.038 af
Routed to Reach 2R : Reach 2

Routing by Stor-Ind method, Time Span= 5.00-20.00 hrs, dt= 0.05 hrs
Peak Elev= 18.00' @ 11.60 hrs Surf.Area= 168 sf Storage= 115 cf
Flood Elev= 20.00' Surf.Area= 168 sf Storage= 115 cf

Plug-Flow detention time= 32.2 min calculated for 0.038 af (93% of inflow)
Center-of-Mass det. time= 10.2 min (807.2 - 797.0)

Volume	Invert	Avail.Storage	Storage Description
#1	17.00'	115 cf	**Custom Stage Data (Prismatic)** Listed below (Recalc)

Elevation (feet)	Surf.Area (sq-ft)	Voids (%)	Inc.Store (cubic-feet)	Cum.Store (cubic-feet)
17.00	61	0.0	0	0
18.00	168	100.0	115	115

Device	Routing	Invert	Outlet Devices
#0	Primary	18.00'	**Automatic Storage Overflow** (Discharged without head)

Primary OutFlow Max=0.00 cfs @ 12.11 hrs HW=18.00' (Free Discharge)

Pond 5P: Level Lip Speader

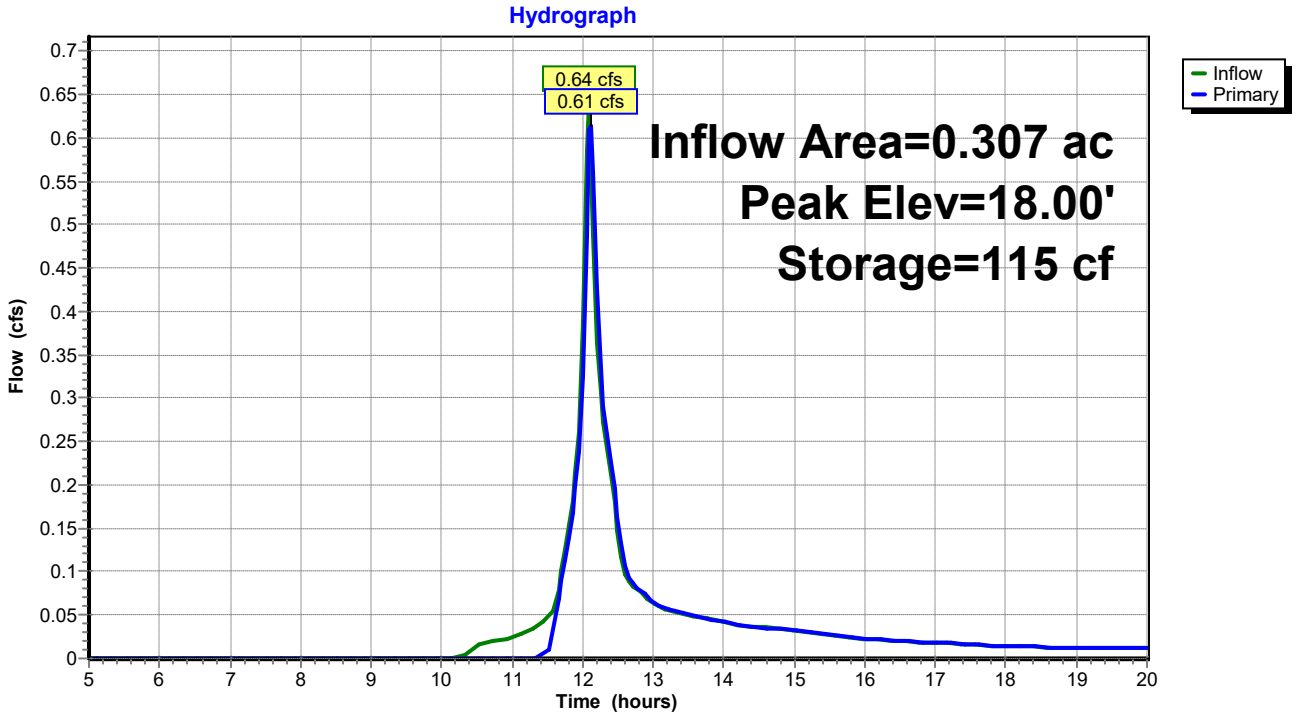

Summary for Link DP1: DP1

Inflow Area = 0.489 ac, 28.87% Impervious, Inflow Depth > 1.54" for 2-yr event
Inflow = 1.02 cfs @ 12.04 hrs, Volume= 0.063 af
Primary = 1.02 cfs @ 12.04 hrs, Volume= 0.063 af, Atten= 0%, Lag= 0.0 min
Routed to Reach SP1 : SACO RIVER / OCEAN

Primary outflow = Inflow, Time Span= 5.00-20.00 hrs, dt= 0.05 hrs

Link DP1: DP1

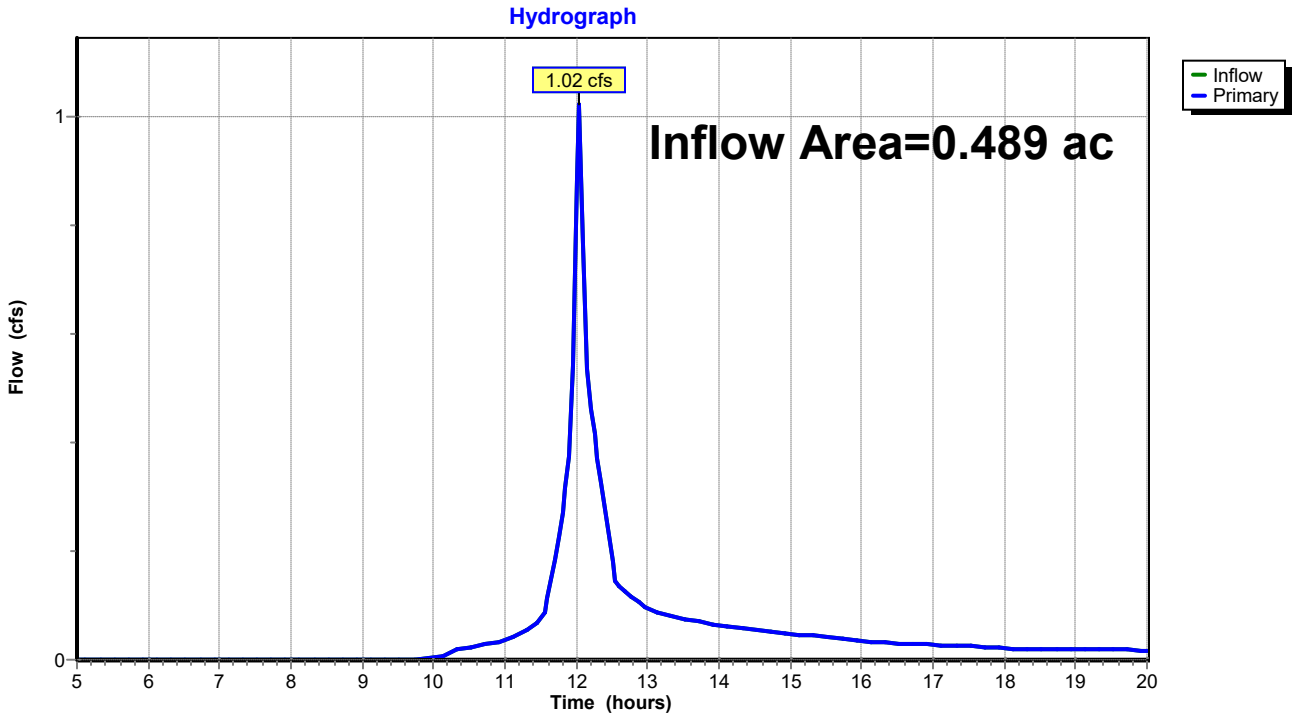

Summary for Link DP2: DP2

Inflow Area = 0.709 ac, 15.44% Impervious, Inflow Depth > 1.39" for 2-yr event
Inflow = 1.24 cfs @ 12.11 hrs, Volume= 0.082 af
Primary = 1.24 cfs @ 12.11 hrs, Volume= 0.082 af, Atten= 0%, Lag= 0.0 min
Routed to Reach SP1 : SACO RIVER / OCEAN

Primary outflow = Inflow, Time Span= 5.00-20.00 hrs, dt= 0.05 hrs

Link DP2: DP2

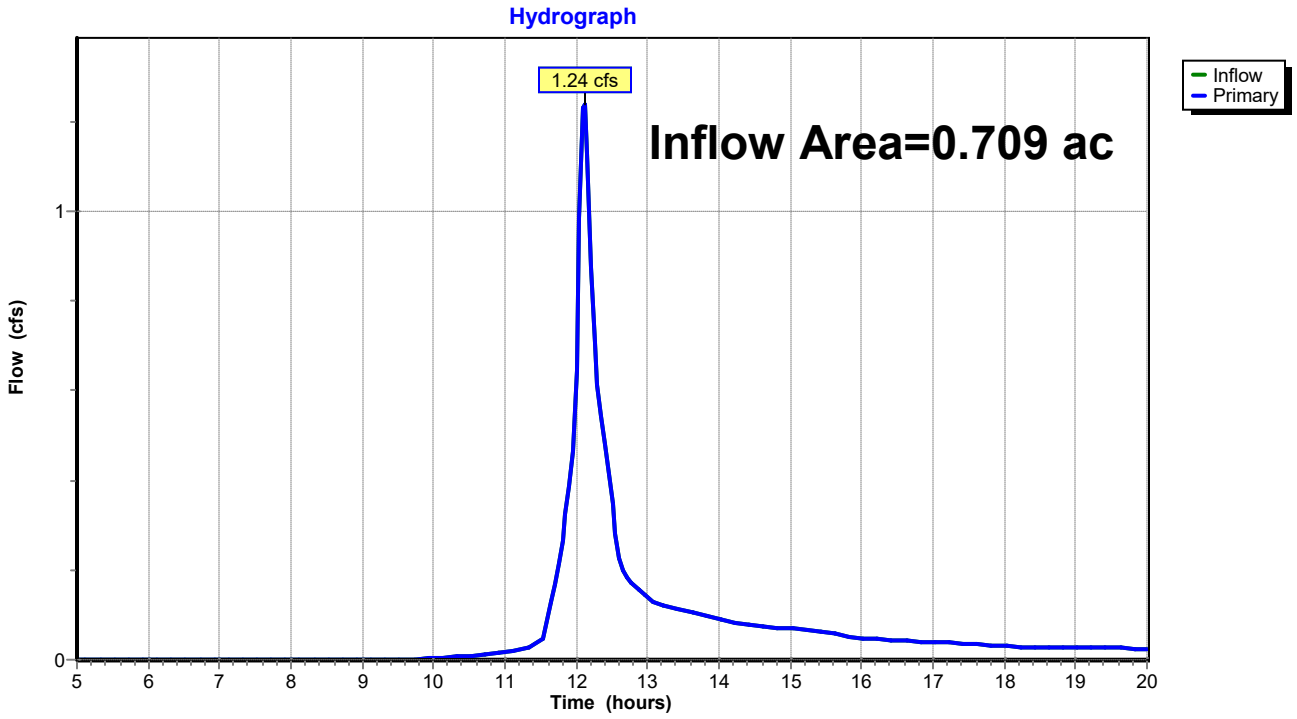

Time span=5.00-20.00 hrs, dt=0.05 hrs, 301 points
Runoff by SCS TR-20 method, UH=SCS, Weighted-CN
Reach routing by Stor-Ind method - Pond routing by Stor-Ind method

Subcatchment 1S: Post Subcatchment 1 Runoff Area=9,832 sf 50.01% Impervious Runoff Depth>3.28"
Flow Length=172' Tc=0.8 min CN=87 Runoff=1.02 cfs 0.062 af

Subcatchment 2S: Post Subcatchment 2 Runoff Area=11,488 sf 10.78% Impervious Runoff Depth>2.53"
Flow Length=133' Tc=3.4 min CN=79 Runoff=0.90 cfs 0.056 af

Subcatchment 3S: Post Subcatchment 3 Runoff Area=13,365 sf 33.49% Impervious Runoff Depth>2.98"
Flow Length=262' Tc=4.9 min CN=84 Runoff=1.15 cfs 0.076 af

Subcatchment 4S: Post Subcatchment 4 Runoff Area=17,529 sf 1.68% Impervious Runoff Depth>2.53"
Flow Length=126' Tc=7.2 min CN=79 Runoff=1.21 cfs 0.085 af

Subcatchment 5S: Post Subcatchment 5 Runoff Area=59,179 sf 4.06% Impervious Runoff Depth>2.62"
Flow Length=445' Tc=7.0 min CN=80 Runoff=4.26 cfs 0.297 af

Reach 1R: Reach 1 Inflow=0.99 cfs 0.060 af
Outflow=0.99 cfs 0.060 af

Reach 2R: Reach 2 Inflow=1.10 cfs 0.073 af
Outflow=1.10 cfs 0.073 af

Reach DP3: Shoreline 3 Inflow=4.26 cfs 0.297 af
Outflow=4.26 cfs 0.297 af

Reach SP1: SACO RIVER / OCEAN Inflow=7.94 cfs 0.570 af
Outflow=7.94 cfs 0.570 af

Pond 1P: Bioretention Filter Cell 1 Peak Elev=18.16' Storage=92 cf Inflow=1.02 cfs 0.062 af
Outflow=0.99 cfs 0.060 af

Pond 2P: CB-1 Peak Elev=14.29' Inflow=0.99 cfs 0.060 af
15.0" Round Culvert n=0.013 L=48.0' S=0.0365 '/' Outflow=0.99 cfs 0.060 af

Pond 3P: Bioretention Filter Cell 2 Peak Elev=23.68' Storage=77 cf Inflow=1.15 cfs 0.076 af
Outflow=1.14 cfs 0.075 af

Pond 4P: CB-2 Peak Elev=19.29' Inflow=1.14 cfs 0.075 af
18.0" Round Culvert n=0.013 L=40.0' S=0.0187 '/' Outflow=1.14 cfs 0.075 af

Pond 5P: Level Lip Speader Peak Elev=18.00' Storage=115 cf Inflow=1.14 cfs 0.075 af
Outflow=1.10 cfs 0.073 af

Link DP1: DP1 Inflow=1.85 cfs 0.116 af
Primary=1.85 cfs 0.116 af

Link DP2: DP2 Inflow=2.31 cfs 0.158 af
Primary=2.31 cfs 0.158 af

Total Runoff Area = 2.557 ac Runoff Volume = 0.575 af Average Runoff Depth = 2.70"
88.04% Pervious = 2.251 ac 11.96% Impervious = 0.306 ac

Summary for Subcatchment 1S: Post Subcatchment 1

Runoff = 1.02 cfs @ 12.01 hrs, Volume= 0.062 af, Depth> 3.28"
Routed to Pond 1P : Bioretention Filter Cell 1

Runoff by SCS TR-20 method, UH=SCS, Weighted-CN, Time Span= 5.00-20.00 hrs, dt= 0.05 hrs
Type III 24-hr 10-yr Rainfall=4.90"

	Area (sf)	CN	Description
	3,430	77	Woods, Good, HSG D
*	982	98	Ledge, HSG D
	595	80	>75% Grass cover, Good, HSG D
*	3,935	98	Paved Access Drive, HSG D
*	890	73	Bioretention Filter Cell, Good, HSG D
	9,832	87	Weighted Average
	4,915		49.99% Pervious Area
	4,917		50.01% Impervious Area

Tc (min)	Length (feet)	Slope (ft/ft)	Velocity (ft/sec)	Capacity (cfs)	Description
0.4	46	0.0500	1.73		**Sheet Flow, Tc-1** Smooth surfaces n= 0.011 P2= 3.30"
0.3	102	0.0500	5.25	15.74	**Channel Flow, Tc-2** Area= 3.0 sf Perim= 9.2' r= 0.33' n= 0.030 Earth, grassed & winding
0.1	24	0.0625	3.75		**Shallow Concentrated Flow, Tc-3** Grassed Waterway Kv= 15.0 fps
0.8	172	Total			

Subcatchment 1S: Post Subcatchment 1

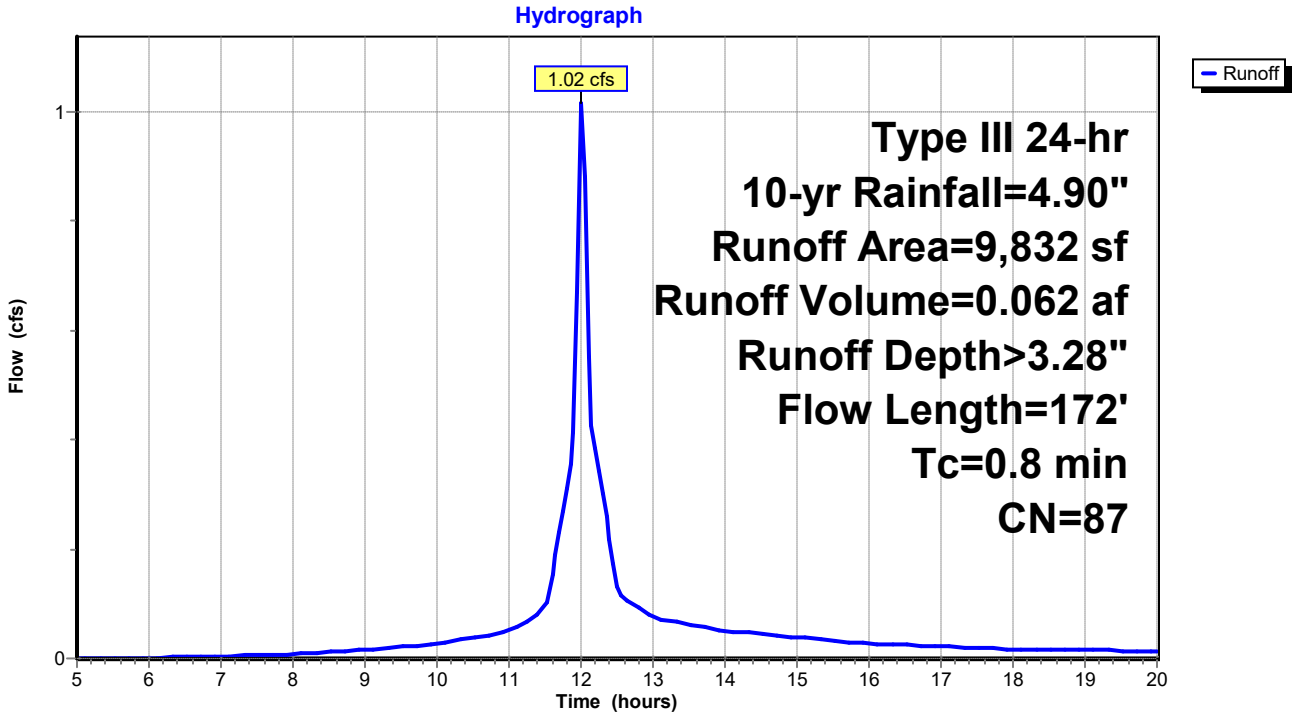

Summary for Subcatchment 2S: Post Subcatchment 2

Runoff = 0.90 cfs @ 12.06 hrs, Volume= 0.056 af, Depth> 2.53"
Routed to Link DP1 : DP1

Runoff by SCS TR-20 method, UH=SCS, Weighted-CN, Time Span= 5.00-20.00 hrs, dt= 0.05 hrs
Type III 24-hr 10-yr Rainfall=4.90"

Area (sf)	CN	Description
10,250	77	Woods, Good, HSG D
1,238	98	Paved parking, HSG D
11,488	79	Weighted Average
10,250		89.22% Pervious Area
1,238		10.78% Impervious Area

Tc (min)	Length (feet)	Slope (ft/ft)	Velocity (ft/sec)	Capacity (cfs)	Description
2.5	21	0.1905	0.14		**Sheet Flow, Tc-1** Woods: Light underbrush n= 0.400 P2= 3.30"
0.9	112	0.1696	2.06		**Shallow Concentrated Flow, Tc-2** Woodland Kv= 5.0 fps
3.4	133	Total			

Subcatchment 2S: Post Subcatchment 2

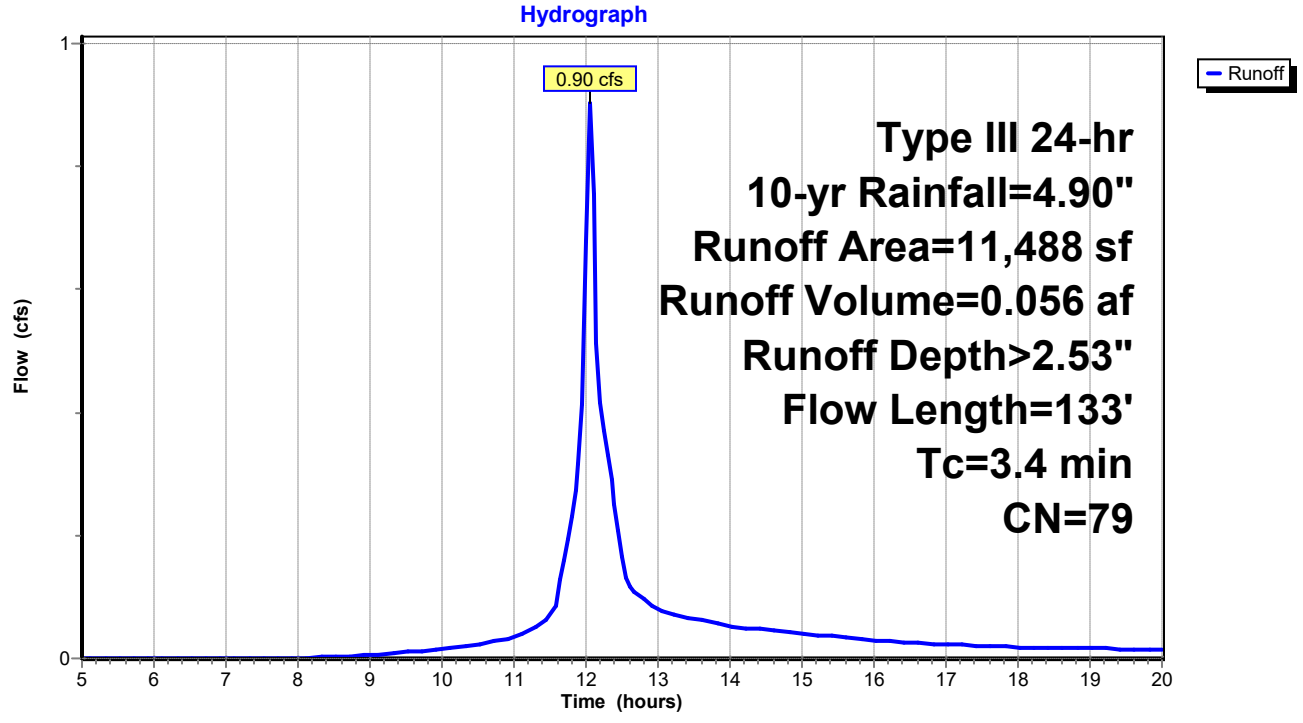

Summary for Subcatchment 3S: Post Subcatchment 3

Runoff = 1.15 cfs @ 12.07 hrs, Volume= 0.076 af, Depth> 2.98"
Routed to Pond 3P : Bioretention Filter Cell 2

Runoff by SCS TR-20 method, UH=SCS, Weighted-CN, Time Span= 5.00-20.00 hrs, dt= 0.05 hrs
Type III 24-hr 10-yr Rainfall=4.90"

	Area (sf)	CN	Description
	6,822	77	Woods, Good, HSG D
*	580	73	Biofiltration cell, Good, HSG D
*	3,768	98	Paved access drive, HSG D
	1,487	80	>75% Grass cover, Good, HSG D
*	708	98	Ledge, HSG D
	13,365	84	Weighted Average
	8,889		66.51% Pervious Area
	4,476		33.49% Impervious Area

Tc (min)	Length (feet)	Slope (ft/ft)	Velocity (ft/sec)	Capacity (cfs)	Description
4.2	43	0.2093	0.17		**Sheet Flow, Tc-1** Woods: Light underbrush n= 0.400 P2= 3.30"
0.7	214	0.0500	5.25	15.74	**Channel Flow, Tc-2** Area= 3.0 sf Perim= 9.2' r= 0.33' n= 0.030 Earth, grassed & winding
0.0	5	0.0500	3.35		**Shallow Concentrated Flow, Tc-3** Grassed Waterway Kv= 15.0 fps
4.9	262	Total			

Subcatchment 3S: Post Subcatchment 3

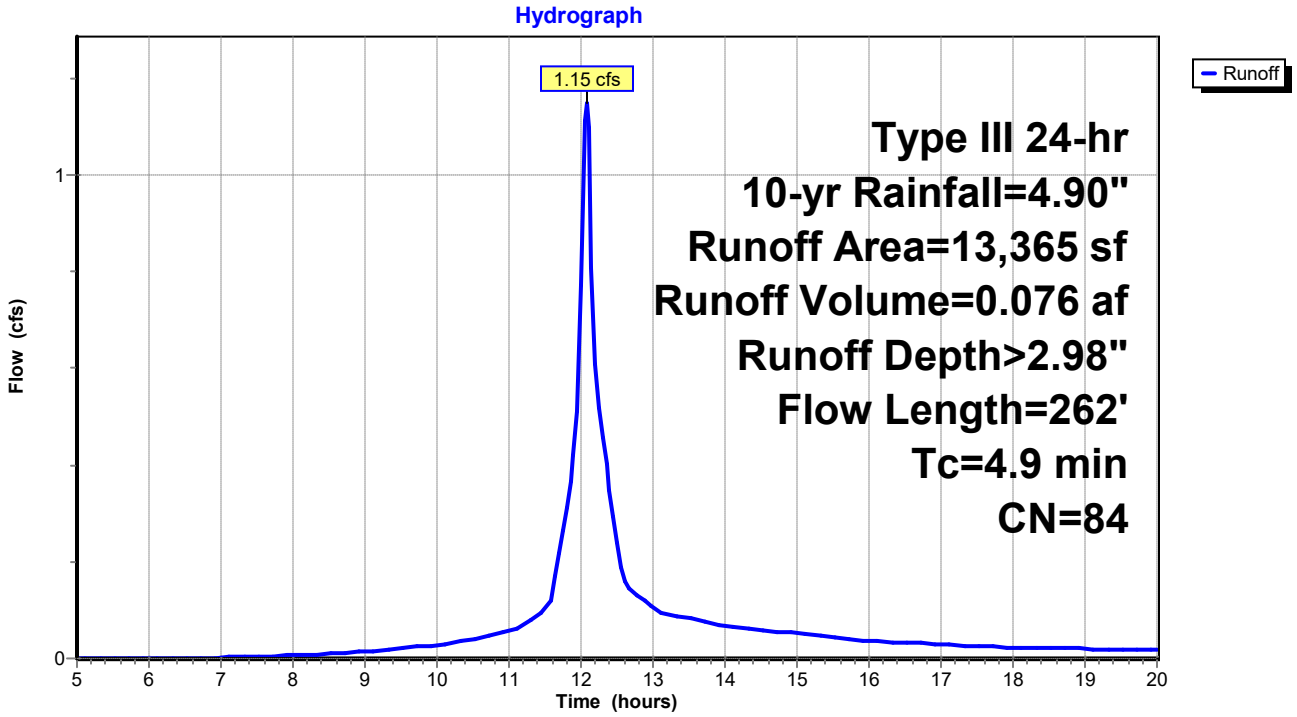

Summary for Subcatchment 4S: Post Subcatchment 4

Runoff = 1.21 cfs @ 12.11 hrs, Volume= 0.085 af, Depth> 2.53"
Routed to Link DP2 : DP2

Runoff by SCS TR-20 method, UH=SCS, Weighted-CN, Time Span= 5.00-20.00 hrs, dt= 0.05 hrs
Type III 24-hr 10-yr Rainfall=4.90"

	Area (sf)	CN	Description
*	295	98	Paved access drive, HSG D
	1,450	80	>75% Grass cover, Good, HSG D
	15,784	79	Woods, Fair, HSG D
	17,529	79	Weighted Average
	17,234		98.32% Pervious Area
	295		1.68% Impervious Area

Tc (min)	Length (feet)	Slope (ft/ft)	Velocity (ft/sec)	Capacity (cfs)	Description
6.8	62	0.1290	0.15		**Sheet Flow, Tc-1** Woods: Light underbrush n= 0.400 P2= 3.30"
0.4	64	0.2343	2.42		**Shallow Concentrated Flow, Tc-2** Woodland Kv= 5.0 fps
7.2	126	Total			

Subcatchment 4S: Post Subcatchment 4

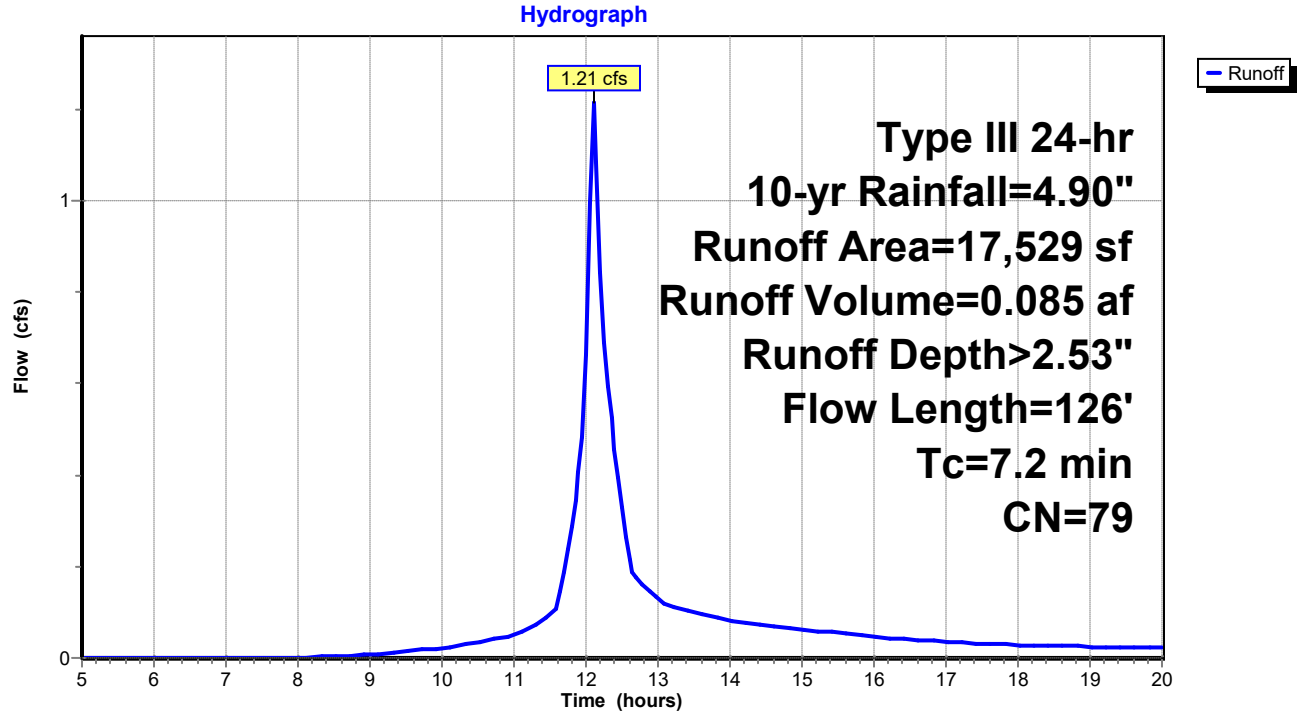

Summary for Subcatchment 5S: Post Subcatchment 5

Runoff = 4.26 cfs @ 12.10 hrs, Volume= 0.297 af, Depth> 2.62"
Routed to Reach DP3 : Shoreline 3

Runoff by SCS TR-20 method, UH=SCS, Weighted-CN, Time Span= 5.00-20.00 hrs, dt= 0.05 hrs
Type III 24-hr 10-yr Rainfall=4.90"

	Area (sf)	CN	Description
*	1,650	98	Paved acccess drive, HSG D
	751	98	Roofs, HSG D
*	6,955	88	Sand beach, HSG D
	3,872	96	Gravel surface, HSG D
	45,951	77	Woods, Good, HSG D
	59,179	80	Weighted Average
	56,778		95.94% Pervious Area
	2,401		4.06% Impervious Area

Tc (min)	Length (feet)	Slope (ft/ft)	Velocity (ft/sec)	Capacity (cfs)	Description
2.7	23	0.1740	0.14		**Sheet Flow, Tc-1** Woods: Light underbrush n= 0.400 P2= 3.30"
1.0	70	0.0574	1.20		**Shallow Concentrated Flow, Tc-2** Woodland Kv= 5.0 fps
0.5	170	0.1059	5.24		**Shallow Concentrated Flow, Tc-3** Unpaved Kv= 16.1 fps
2.5	140	0.0357	0.94		**Shallow Concentrated Flow, Tc-4** Woodland Kv= 5.0 fps
0.3	42	0.0714	2.67		**Shallow Concentrated Flow, Tc-5** Nearly Bare & Untilled Kv= 10.0 fps
7.0	445	Total			

Subcatchment 5S: Post Subcatchment 5

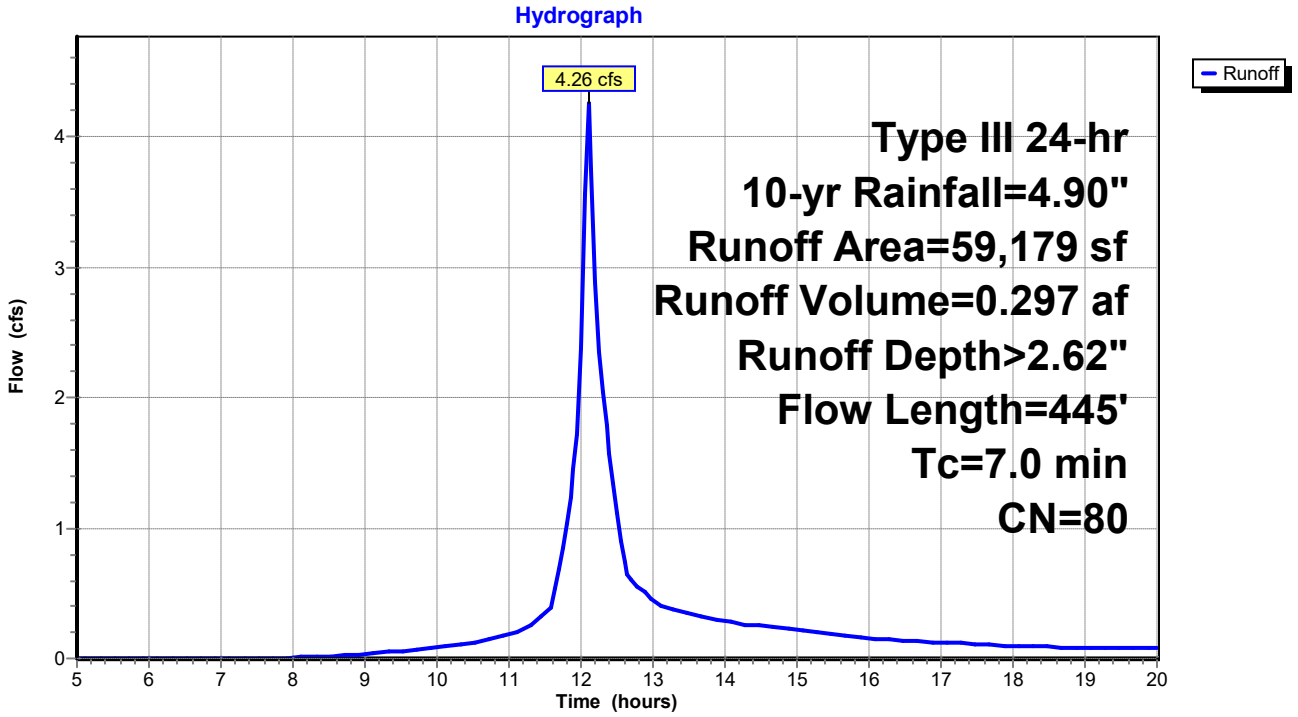

Summary for Reach 1R: Reach 1

Inflow Area = 0.226 ac, 50.01% Impervious, Inflow Depth > 3.21" for 10-yr event
Inflow = 0.99 cfs @ 12.02 hrs, Volume= 0.060 af
Outflow = 0.99 cfs @ 12.02 hrs, Volume= 0.060 af, Atten= 0%, Lag= 0.0 min
Routed to Link DP1 : DP1

Routing by Stor-Ind method, Time Span= 5.00-20.00 hrs, dt= 0.05 hrs

Reach 1R: Reach 1

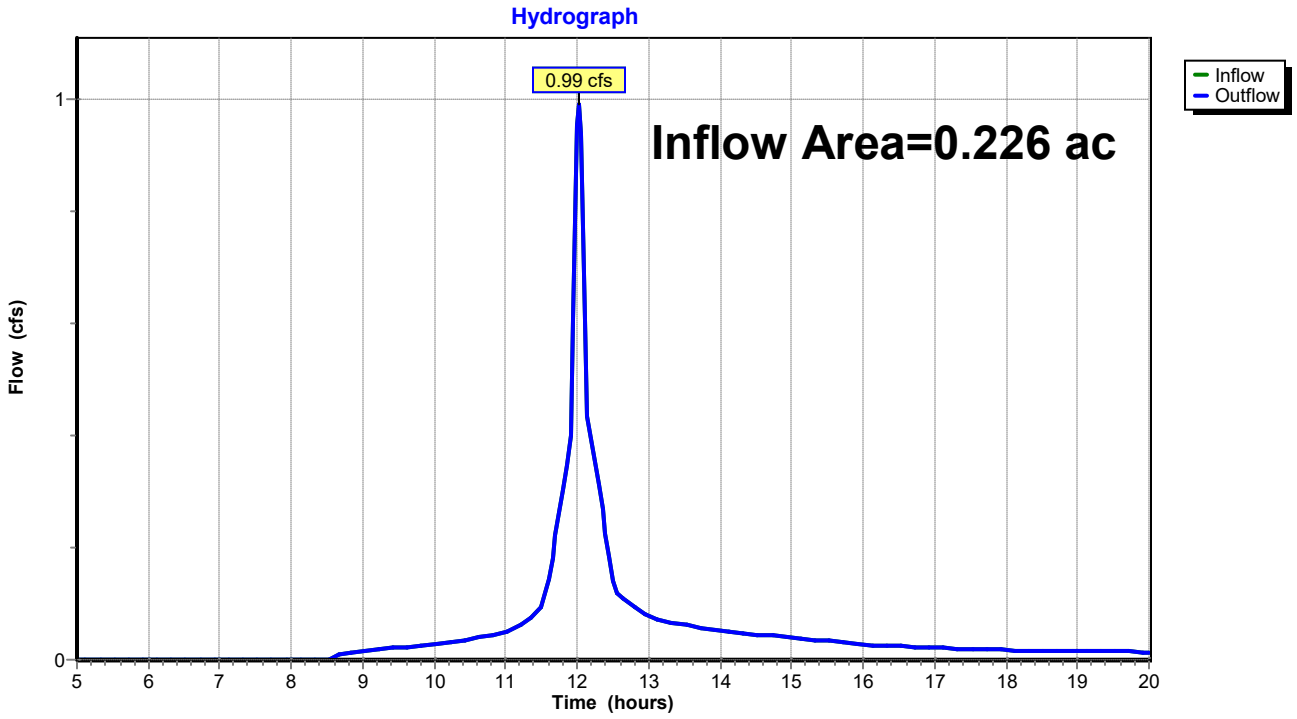

Summary for Reach 2R: Reach 2

Inflow Area = 0.307 ac, 33.49% Impervious, Inflow Depth > 2.84" for 10-yr event
Inflow = 1.10 cfs @ 12.11 hrs, Volume= 0.073 af
Outflow = 1.10 cfs @ 12.11 hrs, Volume= 0.073 af, Atten= 0%, Lag= 0.0 min
Routed to Link DP2 : DP2

Routing by Stor-Ind method, Time Span= 5.00-20.00 hrs, dt= 0.05 hrs

Reach 2R: Reach 2

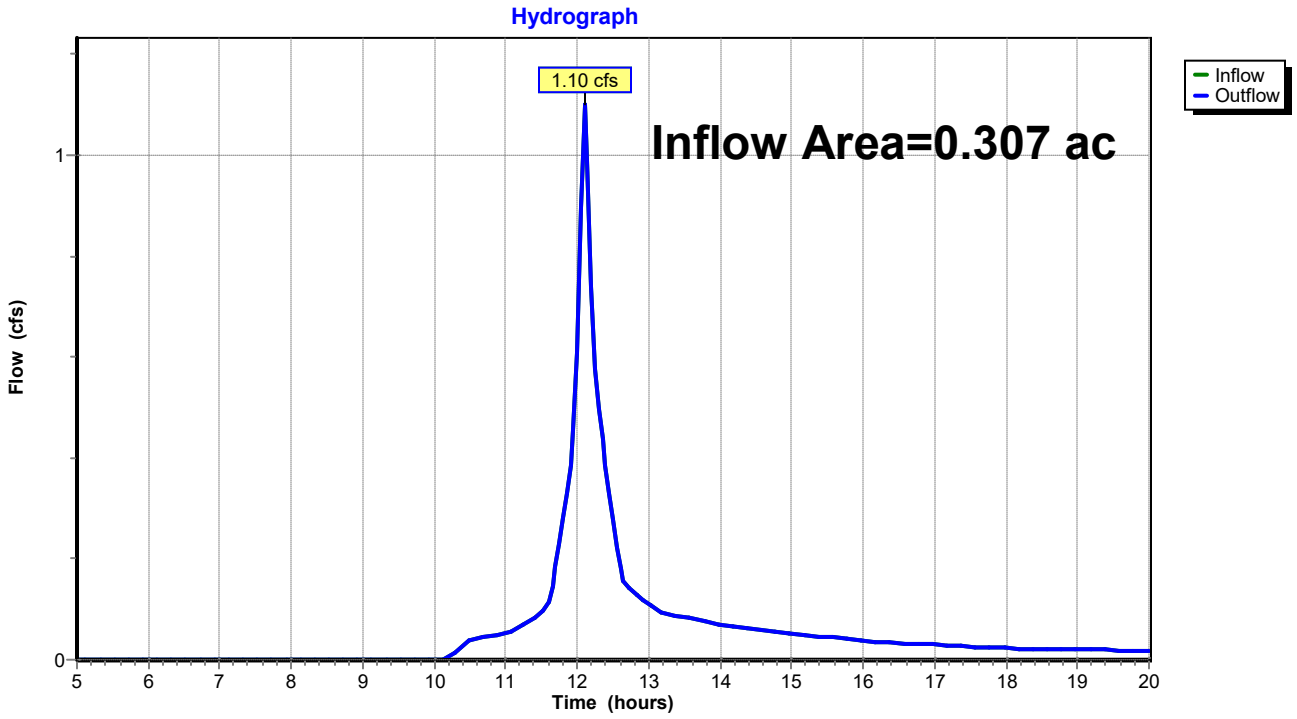

Summary for Reach DP3: Shoreline 3

Inflow Area = 1.359 ac, 4.06% Impervious, Inflow Depth > 2.62" for 10-yr event
Inflow = 4.26 cfs @ 12.10 hrs, Volume= 0.297 af
Outflow = 4.26 cfs @ 12.10 hrs, Volume= 0.297 af, Atten= 0%, Lag= 0.0 min
Routed to Reach SP1 : SACO RIVER / OCEAN

Routing by Stor-Ind method, Time Span= 5.00-20.00 hrs, dt= 0.05 hrs

Reach DP3: Shoreline 3

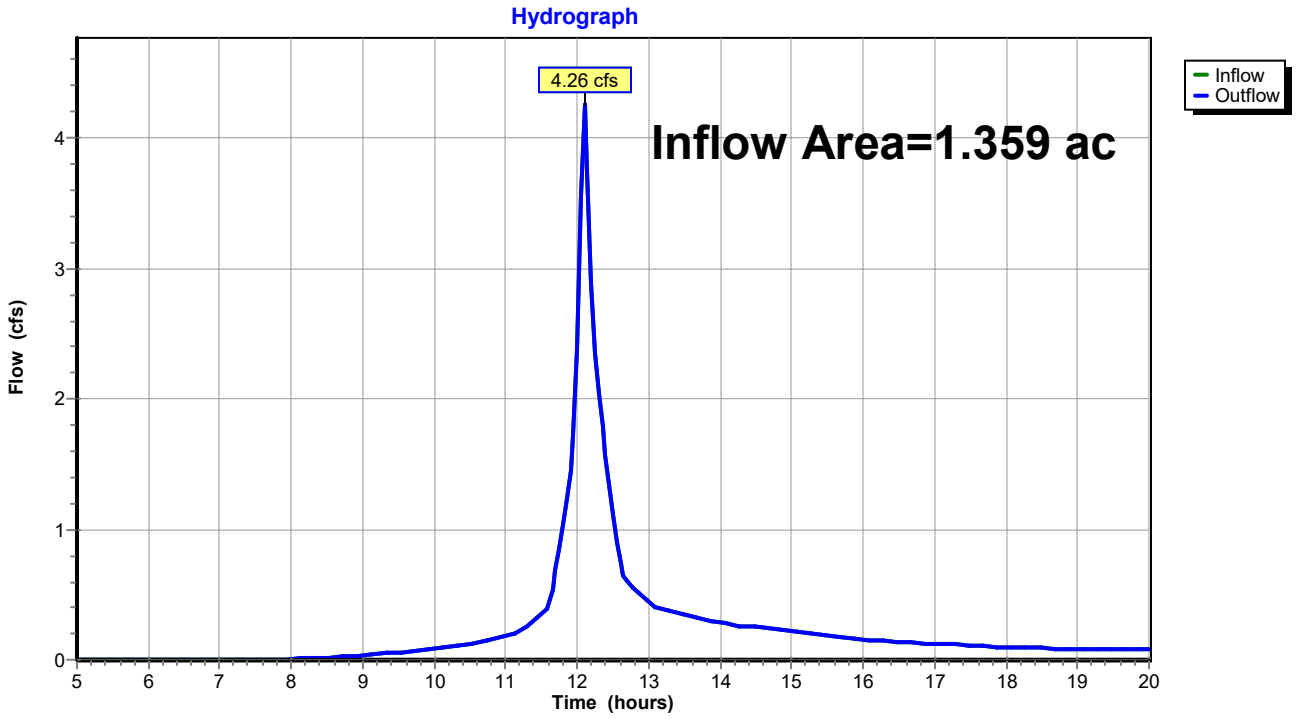

Summary for Reach SP1: SACO RIVER / OCEAN

Inflow Area = 2.557 ac, 11.96% Impervious, Inflow Depth > 2.68" for 10-yr event
Inflow = 7.94 cfs @ 12.09 hrs, Volume= 0.570 af
Outflow = 7.94 cfs @ 12.09 hrs, Volume= 0.570 af, Atten= 0%, Lag= 0.0 min

Routing by Stor-Ind method, Time Span= 5.00-20.00 hrs, dt= 0.05 hrs

Reach SP1: SACO RIVER / OCEAN

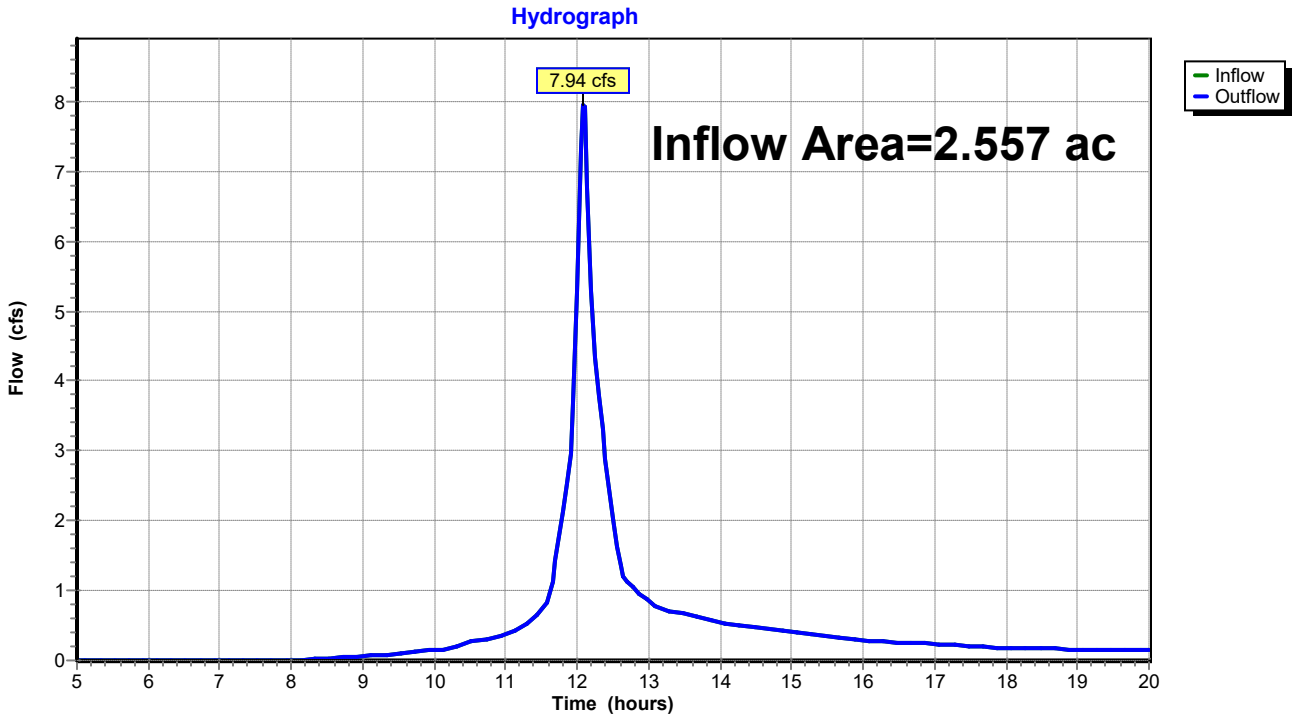

Summary for Pond 1P: Bioretention Filter Cell 1

Inflow Area = 0.226 ac, 50.01% Impervious, Inflow Depth > 3.28" for 10-yr event
Inflow = 1.02 cfs @ 12.01 hrs, Volume= 0.062 af
Outflow = 0.99 cfs @ 12.02 hrs, Volume= 0.060 af, Atten= 3%, Lag= 0.7 min
Primary = 0.99 cfs @ 12.02 hrs, Volume= 0.060 af
Routed to Pond 2P : CB-1

Routing by Stor-Ind method, Time Span= 5.00-20.00 hrs, dt= 0.05 hrs
Peak Elev= 18.16' @ 12.02 hrs Surf.Area= 264 sf Storage= 92 cf

Plug-Flow detention time= 15.2 min calculated for 0.060 af (98% of inflow)
Center-of-Mass det. time= 7.1 min (773.3 - 766.2)

Volume	Invert	Avail.Storage	Storage Description
#1	17.50'	200 cf	**Custom Stage Data (Prismatic)** Listed below (Recalc)

Elevation (feet)	Surf.Area (sq-ft)	Inc.Store (cubic-feet)	Cum.Store (cubic-feet)
17.50	0	0	0
18.00	213	53	53
18.50	372	146	200

Device	Routing	Invert	Outlet Devices
#1	Primary	18.00'	**18.0" Horiz. Orifice/Grate** C= 0.600 in 24.0" Grate (56% open area) Limited to weir flow at low heads

Primary OutFlow Max=0.94 cfs @ 12.02 hrs HW=18.16' (Free Discharge)
↑—**1=Orifice/Grate** (Weir Controls 0.94 cfs @ 1.29 fps)

Pond 1P: Bioretention Filter Cell 1

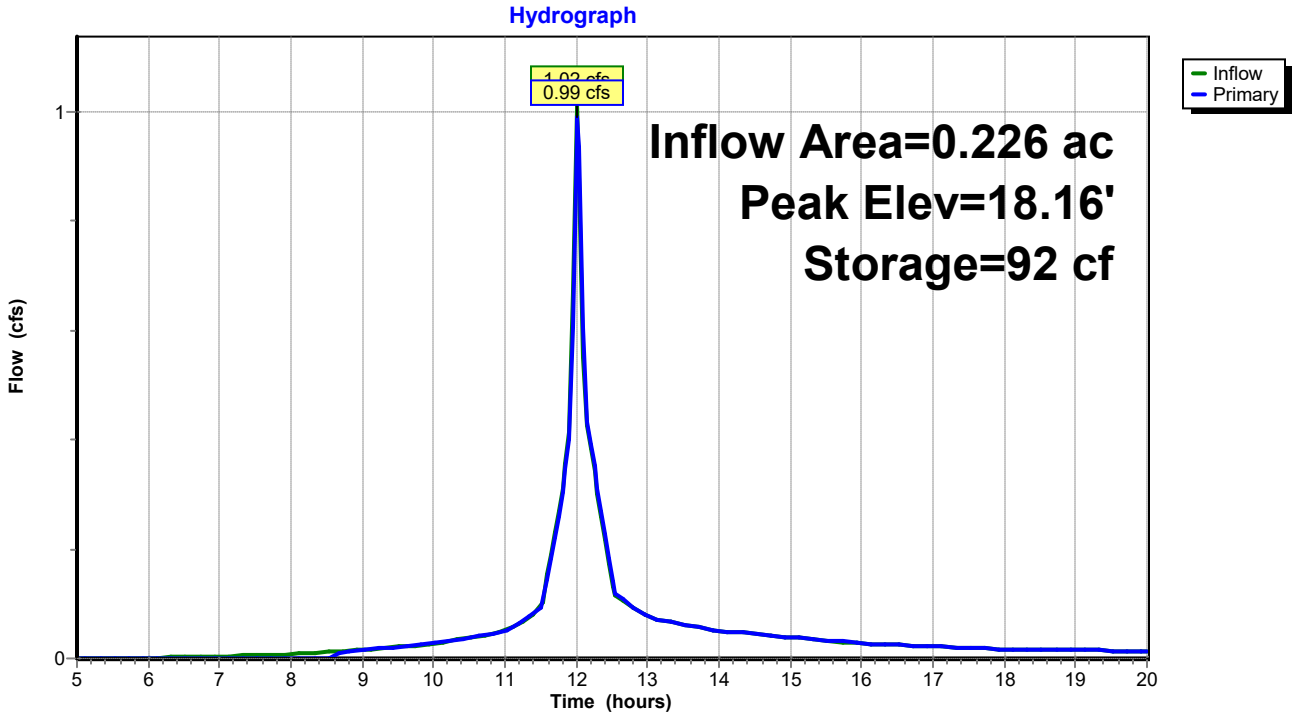

Summary for Pond 2P: CB-1

Inflow Area = 0.226 ac, 50.01% Impervious, Inflow Depth > 3.21" for 10-yr event
Inflow = 0.99 cfs @ 12.02 hrs, Volume= 0.060 af
Outflow = 0.99 cfs @ 12.02 hrs, Volume= 0.060 af, Atten= 0%, Lag= 0.0 min
Primary = 0.99 cfs @ 12.02 hrs, Volume= 0.060 af
Routed to Reach 1R : Reach 1

Routing by Stor-Ind method, Time Span= 5.00-20.00 hrs, dt= 0.05 hrs
Peak Elev= 14.29' @ 12.02 hrs

Device	Routing	Invert	Outlet Devices
#1	Primary	13.75'	**15.0" Round Culvert** L= 48.0' CPP, projecting, no headwall, Ke= 0.900 Inlet / Outlet Invert= 13.75' / 12.00' S= 0.0365 '/' Cc= 0.900 n= 0.013 Corrugated PE, smooth interior, Flow Area= 1.23 sf

Primary OutFlow Max=0.94 cfs @ 12.02 hrs HW=14.27' (Free Discharge)
1=Culvert (Inlet Controls 0.94 cfs @ 1.94 fps)

Pond 2P: CB-1

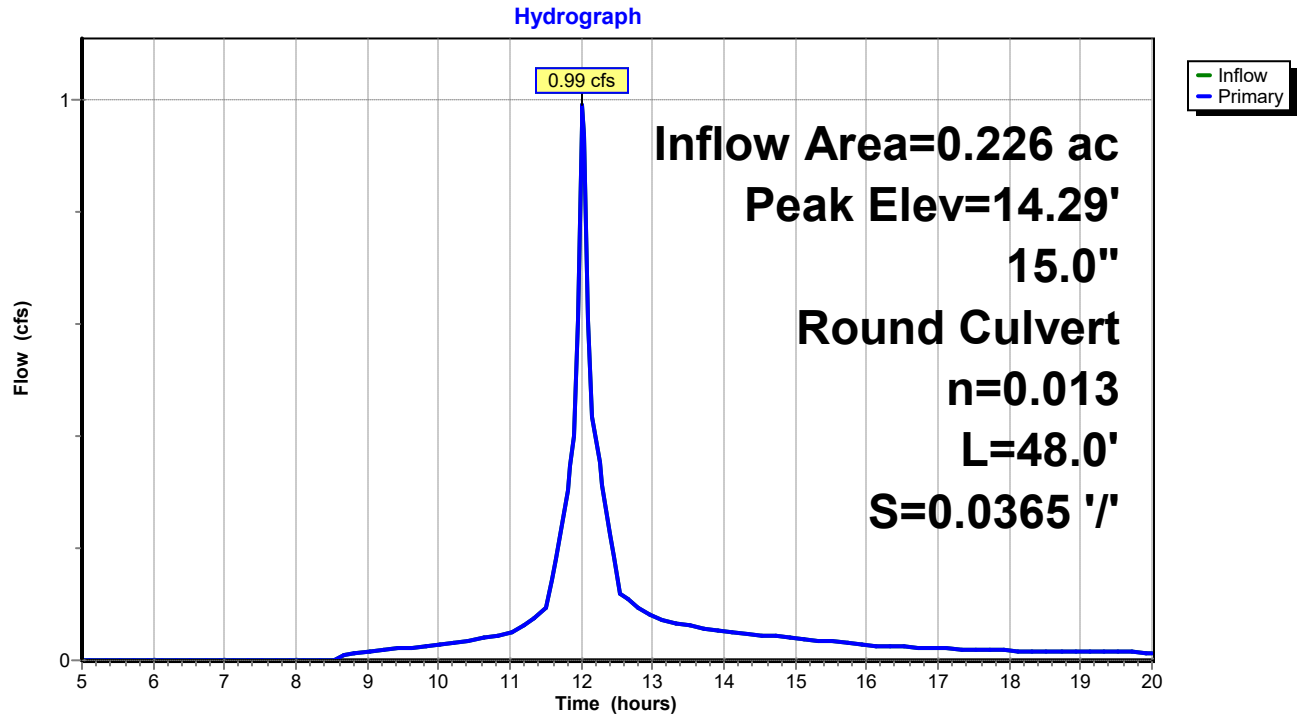

Summary for Pond 3P: Bioretention Filter Cell 2

Inflow Area = 0.307 ac, 33.49% Impervious, Inflow Depth > 2.98" for 10-yr event
Inflow = 1.15 cfs @ 12.07 hrs, Volume= 0.076 af
Outflow = 1.14 cfs @ 12.08 hrs, Volume= 0.075 af, Atten= 0%, Lag= 0.6 min
Primary = 1.14 cfs @ 12.08 hrs, Volume= 0.075 af
Routed to Pond 4P : CB-2

Routing by Stor-Ind method, Time Span= 5.00-20.00 hrs, dt= 0.05 hrs
Peak Elev= 23.68' @ 12.08 hrs Surf.Area= 227 sf Storage= 77 cf

Plug-Flow detention time= 9.5 min calculated for 0.075 af (98% of inflow)
Center-of-Mass det. time= 4.4 min (781.8 - 777.5)

Volume	Invert	Avail.Storage	Storage Description
#1	23.00'	380 cf	**Custom Stage Data (Prismatic)** Listed below (Recalc)

Elevation (feet)	Surf.Area (sq-ft)	Inc.Store (cubic-feet)	Cum.Store (cubic-feet)
23.00	0	0	0
24.00	335	168	168
24.50	515	213	380

Device	Routing	Invert	Outlet Devices
#1	Primary	23.50'	**18.0" Horiz. Orifice/Grate** C= 0.600 in 24.0" Grate (56% open area) Limited to weir flow at low heads

Primary OutFlow Max=1.11 cfs @ 12.08 hrs HW=23.67' (Free Discharge)
↑**1=Orifice/Grate** (Weir Controls 1.11 cfs @ 1.36 fps)

Pond 3P: Bioretention Filter Cell 2

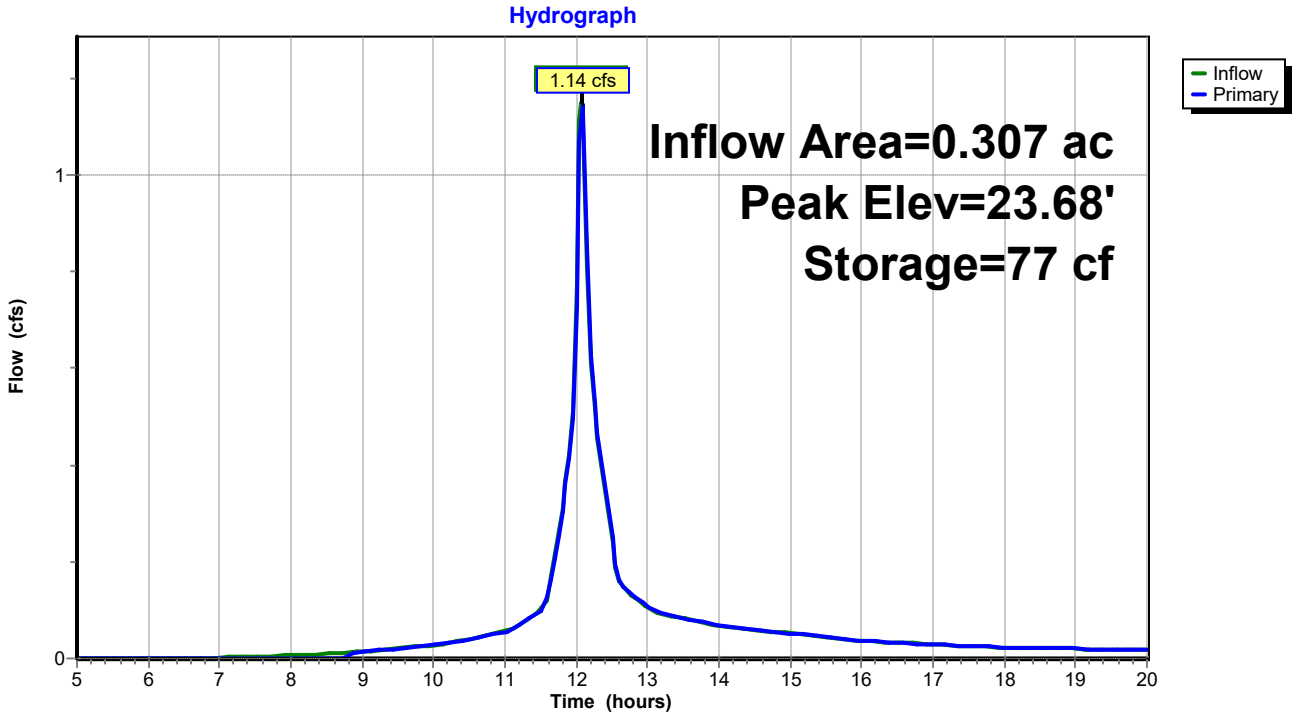

Summary for Pond 4P: CB-2

Inflow Area = 0.307 ac, 33.49% Impervious, Inflow Depth > 2.95" for 10-yr event
Inflow = 1.14 cfs @ 12.08 hrs, Volume= 0.075 af
Outflow = 1.14 cfs @ 12.08 hrs, Volume= 0.075 af, Atten= 0%, Lag= 0.0 min
Primary = 1.14 cfs @ 12.08 hrs, Volume= 0.075 af
Routed to Pond 5P : Level Lip Speader

Routing by Stor-Ind method, Time Span= 5.00-20.00 hrs, dt= 0.05 hrs
Peak Elev= 19.29' @ 12.08 hrs

Device	Routing	Invert	Outlet Devices
#1	Primary	18.75'	**18.0" Round Culvert** L= 40.0' CPP, projecting, no headwall, Ke= 0.900 Inlet / Outlet Invert= 18.75' / 18.00' S= 0.0187 '/' Cc= 0.900 n= 0.013 Corrugated PE, smooth interior, Flow Area= 1.77 sf

Primary OutFlow Max=1.11 cfs @ 12.08 hrs HW=19.28' (Free Discharge)
1=Culvert (Inlet Controls 1.11 cfs @ 1.96 fps)

Pond 4P: CB-2

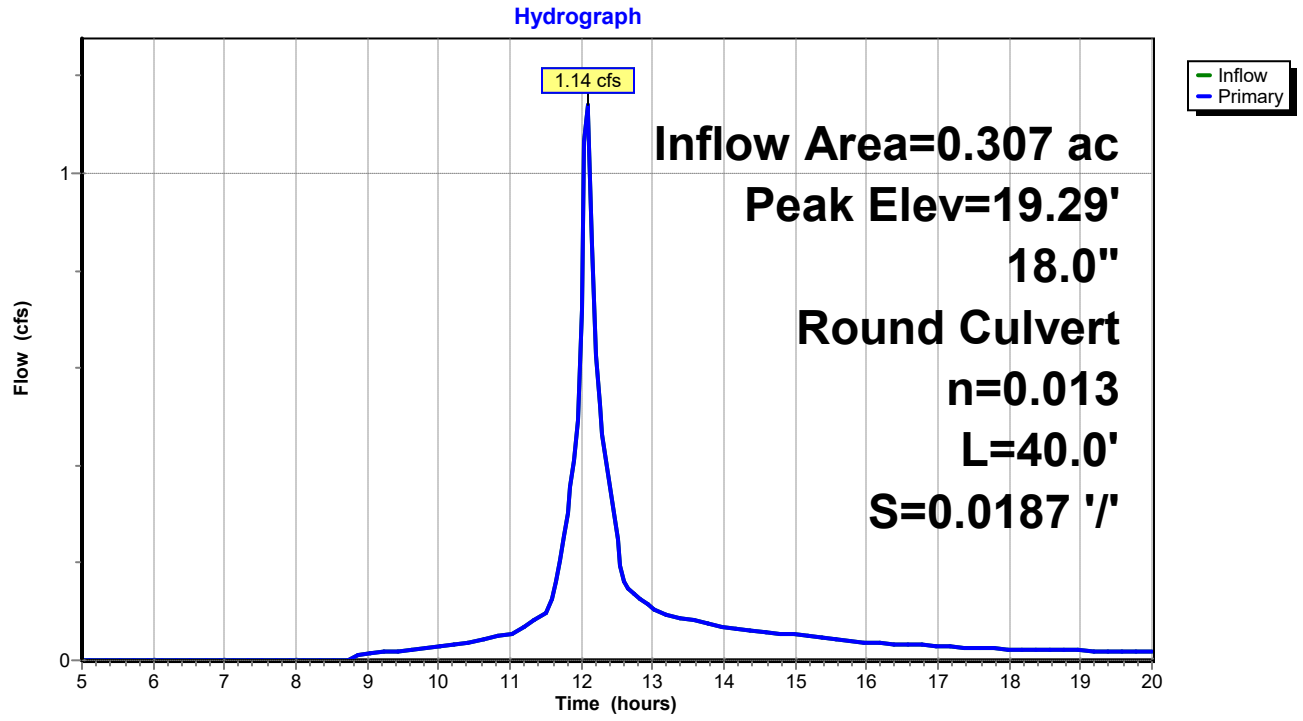

Summary for Pond 5P: Level Lip Speader

Inflow Area = 0.307 ac, 33.49% Impervious, Inflow Depth > 2.95" for 10-yr event
Inflow = 1.14 cfs @ 12.08 hrs, Volume= 0.075 af
Outflow = 1.10 cfs @ 12.11 hrs, Volume= 0.073 af, Atten= 4%, Lag= 1.4 min
Primary = 1.10 cfs @ 12.11 hrs, Volume= 0.073 af
Routed to Reach 2R : Reach 2

Routing by Stor-Ind method, Time Span= 5.00-20.00 hrs, dt= 0.05 hrs
Peak Elev= 18.00' @ 10.30 hrs Surf.Area= 168 sf Storage= 115 cf
Flood Elev= 20.00' Surf.Area= 168 sf Storage= 115 cf

Plug-Flow detention time= 21.7 min calculated for 0.072 af (96% of inflow)
Center-of-Mass det. time= 8.6 min (790.4 - 781.8)

Volume	Invert	Avail.Storage	Storage Description
#1	17.00'	115 cf	**Custom Stage Data (Prismatic)** Listed below (Recalc)

Elevation (feet)	Surf.Area (sq-ft)	Voids (%)	Inc.Store (cubic-feet)	Cum.Store (cubic-feet)
17.00	61	0.0	0	0
18.00	168	100.0	115	115

Device	Routing	Invert	Outlet Devices
#0	Primary	18.00'	**Automatic Storage Overflow** (Discharged without head)

Primary OutFlow Max=0.00 cfs @ 12.11 hrs HW=18.00' (Free Discharge)

Pond 5P: Level Lip Speader

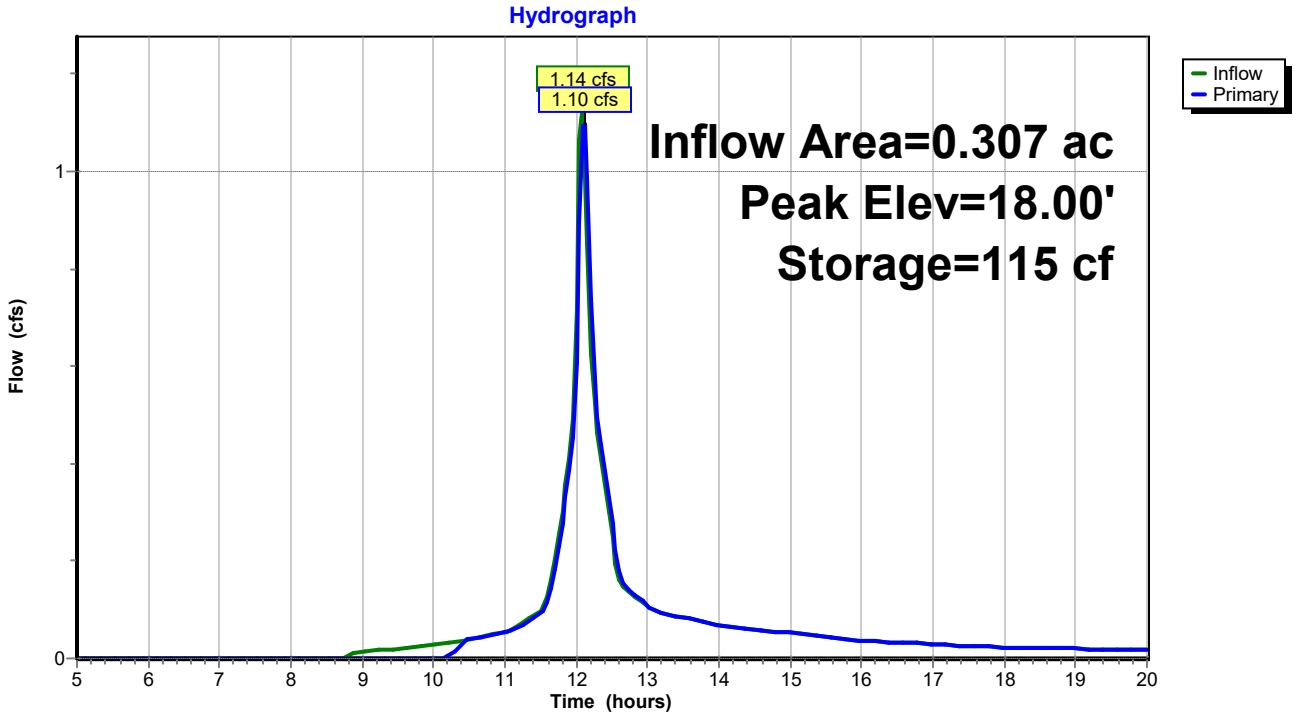

Summary for Link DP1: DP1

Inflow Area = 0.489 ac, 28.87% Impervious, Inflow Depth > 2.85" for 10-yr event
Inflow = 1.85 cfs @ 12.04 hrs, Volume= 0.116 af
Primary = 1.85 cfs @ 12.04 hrs, Volume= 0.116 af, Atten= 0%, Lag= 0.0 min
Routed to Reach SP1 : SACO RIVER / OCEAN

Primary outflow = Inflow, Time Span= 5.00-20.00 hrs, dt= 0.05 hrs

Link DP1: DP1

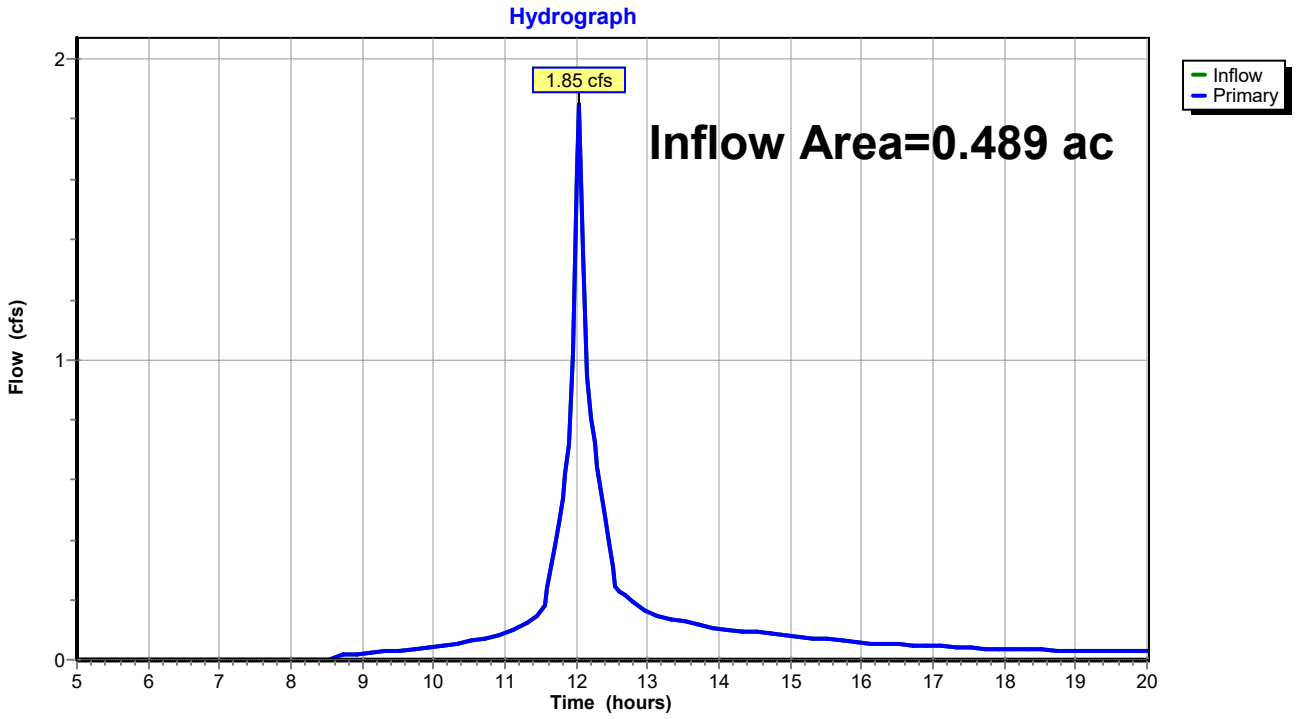

Summary for Link DP2: DP2

Inflow Area = 0.709 ac, 15.44% Impervious, Inflow Depth > 2.67" for 10-yr event
Inflow = 2.31 cfs @ 12.11 hrs, Volume= 0.158 af
Primary = 2.31 cfs @ 12.11 hrs, Volume= 0.158 af, Atten= 0%, Lag= 0.0 min
Routed to Reach SP1 : SACO RIVER / OCEAN

Primary outflow = Inflow, Time Span= 5.00-20.00 hrs, dt= 0.05 hrs

Link DP2: DP2

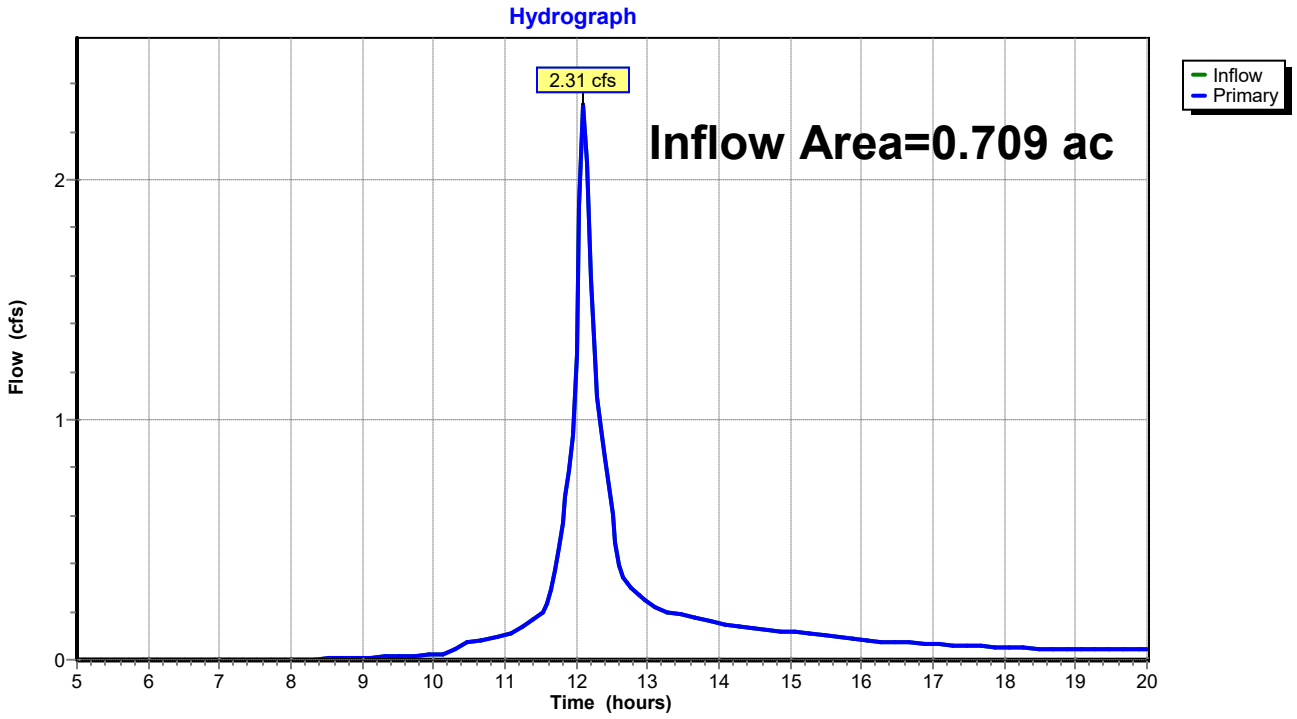

Time span=5.00-20.00 hrs, dt=0.05 hrs, 301 points
Runoff by SCS TR-20 method, UH=SCS, Weighted-CN
Reach routing by Stor-Ind method - Pond routing by Stor-Ind method

Subcatchment 1S: Post Subcatchment 1 Runoff Area=9,832 sf 50.01% Impervious Runoff Depth>4.45"
Flow Length=172' Tc=0.8 min CN=87 Runoff=1.36 cfs 0.084 af

Subcatchment 2S: Post Subcatchment 2 Runoff Area=11,488 sf 10.78% Impervious Runoff Depth>3.62"
Flow Length=133' Tc=3.4 min CN=79 Runoff=1.28 cfs 0.080 af

Subcatchment 3S: Post Subcatchment 3 Runoff Area=13,365 sf 33.49% Impervious Runoff Depth>4.13"
Flow Length=262' Tc=4.9 min CN=84 Runoff=1.57 cfs 0.106 af

Subcatchment 4S: Post Subcatchment 4 Runoff Area=17,529 sf 1.68% Impervious Runoff Depth>3.61"
Flow Length=126' Tc=7.2 min CN=79 Runoff=1.72 cfs 0.121 af

Subcatchment 5S: Post Subcatchment 5 Runoff Area=59,179 sf 4.06% Impervious Runoff Depth>3.72"
Flow Length=445' Tc=7.0 min CN=80 Runoff=5.99 cfs 0.421 af

Reach 1R: Reach 1 Inflow=1.33 cfs 0.082 af
Outflow=1.33 cfs 0.082 af

Reach 2R: Reach 2 Inflow=1.50 cfs 0.102 af
Outflow=1.50 cfs 0.102 af

Reach DP3: Shoreline 3 Inflow=5.99 cfs 0.421 af
Outflow=5.99 cfs 0.421 af

Reach SP1: SACO RIVER / OCEAN Inflow=11.09 cfs 0.806 af
Outflow=11.09 cfs 0.806 af

Pond 1P: Bioretention Filter Cell 1 Peak Elev=18.20' Storage=101 cf Inflow=1.36 cfs 0.084 af
Outflow=1.33 cfs 0.082 af

Pond 2P: CB-1 Peak Elev=14.38' Inflow=1.33 cfs 0.082 af
15.0" Round Culvert n=0.013 L=48.0' S=0.0365 '/' Outflow=1.33 cfs 0.082 af

Pond 3P: Bioretention Filter Cell 2 Peak Elev=23.72' Storage=86 cf Inflow=1.57 cfs 0.106 af
Outflow=1.56 cfs 0.105 af

Pond 4P: CB-2 Peak Elev=19.39' Inflow=1.56 cfs 0.105 af
18.0" Round Culvert n=0.013 L=40.0' S=0.0187 '/' Outflow=1.56 cfs 0.105 af

Pond 5P: Level Lip Speader Peak Elev=18.00' Storage=115 cf Inflow=1.56 cfs 0.105 af
Outflow=1.50 cfs 0.102 af

Link DP1: DP1 Inflow=2.54 cfs 0.162 af
Primary=2.54 cfs 0.162 af

Link DP2: DP2 Inflow=3.22 cfs 0.223 af
Primary=3.22 cfs 0.223 af

Total Runoff Area = 2.557 ac Runoff Volume = 0.811 af Average Runoff Depth = 3.80"
88.04% Pervious = 2.251 ac 11.96% Impervious = 0.306 ac

Summary for Subcatchment 1S: Post Subcatchment 1

Runoff = 1.36 cfs @ 12.01 hrs, Volume= 0.084 af, Depth> 4.45"
Routed to Pond 1P : Bioretention Filter Cell 1

Runoff by SCS TR-20 method, UH=SCS, Weighted-CN, Time Span= 5.00-20.00 hrs, dt= 0.05 hrs
Type III 24-hr 25-yr Rainfall=6.20"

	Area (sf)	CN	Description
	3,430	77	Woods, Good, HSG D
*	982	98	Ledge, HSG D
	595	80	>75% Grass cover, Good, HSG D
*	3,935	98	Paved Access Drive, HSG D
*	890	73	Bioretention Filter Cell, Good, HSG D
	9,832	87	Weighted Average
	4,915		49.99% Pervious Area
	4,917		50.01% Impervious Area

Tc (min)	Length (feet)	Slope (ft/ft)	Velocity (ft/sec)	Capacity (cfs)	Description
0.4	46	0.0500	1.73		**Sheet Flow, Tc-1** Smooth surfaces n= 0.011 P2= 3.30"
0.3	102	0.0500	5.25	15.74	**Channel Flow, Tc-2** Area= 3.0 sf Perim= 9.2' r= 0.33' n= 0.030 Earth, grassed & winding
0.1	24	0.0625	3.75		**Shallow Concentrated Flow, Tc-3** Grassed Waterway Kv= 15.0 fps
0.8	172	Total			

Subcatchment 1S: Post Subcatchment 1

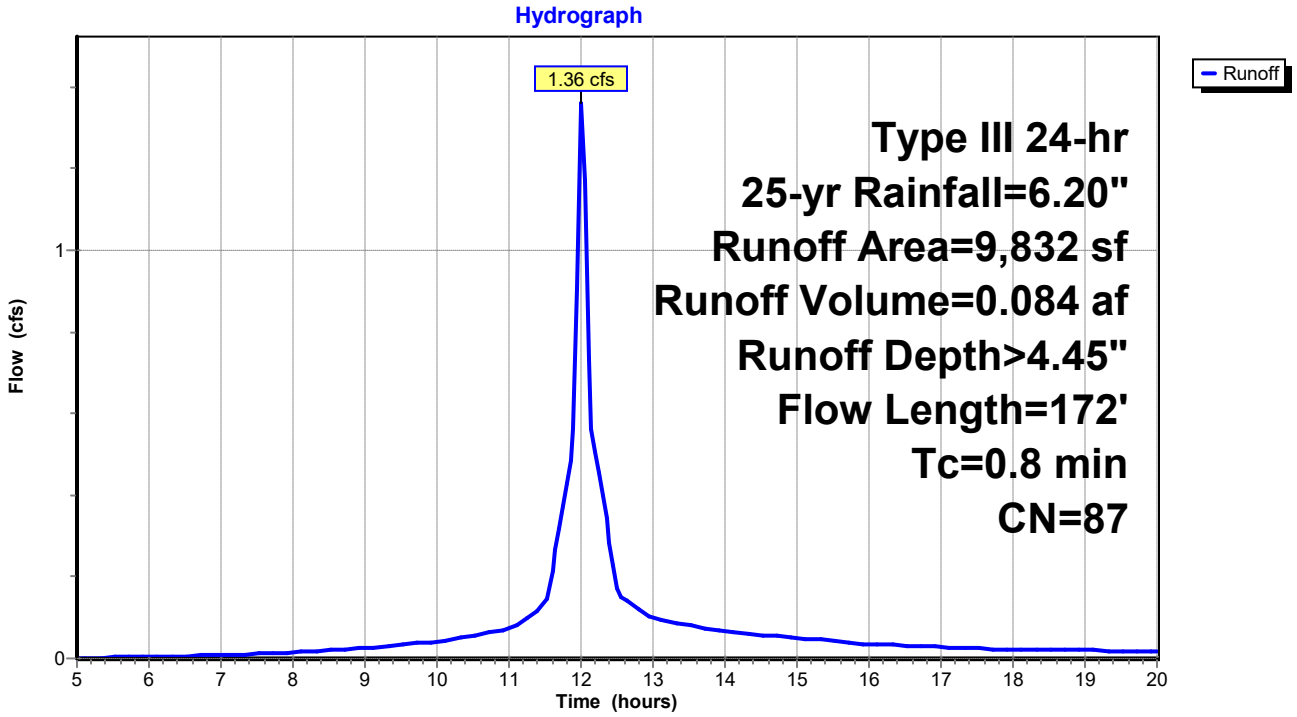

Summary for Subcatchment 2S: Post Subcatchment 2

Runoff = 1.28 cfs @ 12.05 hrs, Volume= 0.080 af, Depth> 3.62"
Routed to Link DP1 : DP1

Runoff by SCS TR-20 method, UH=SCS, Weighted-CN, Time Span= 5.00-20.00 hrs, dt= 0.05 hrs
Type III 24-hr 25-yr Rainfall=6.20"

Area (sf)	CN	Description
10,250	77	Woods, Good, HSG D
1,238	98	Paved parking, HSG D
11,488	79	Weighted Average
10,250		89.22% Pervious Area
1,238		10.78% Impervious Area

Tc (min)	Length (feet)	Slope (ft/ft)	Velocity (ft/sec)	Capacity (cfs)	Description
2.5	21	0.1905	0.14		**Sheet Flow, Tc-1** Woods: Light underbrush n= 0.400 P2= 3.30"
0.9	112	0.1696	2.06		**Shallow Concentrated Flow, Tc-2** Woodland Kv= 5.0 fps
3.4	133	Total			

Subcatchment 2S: Post Subcatchment 2

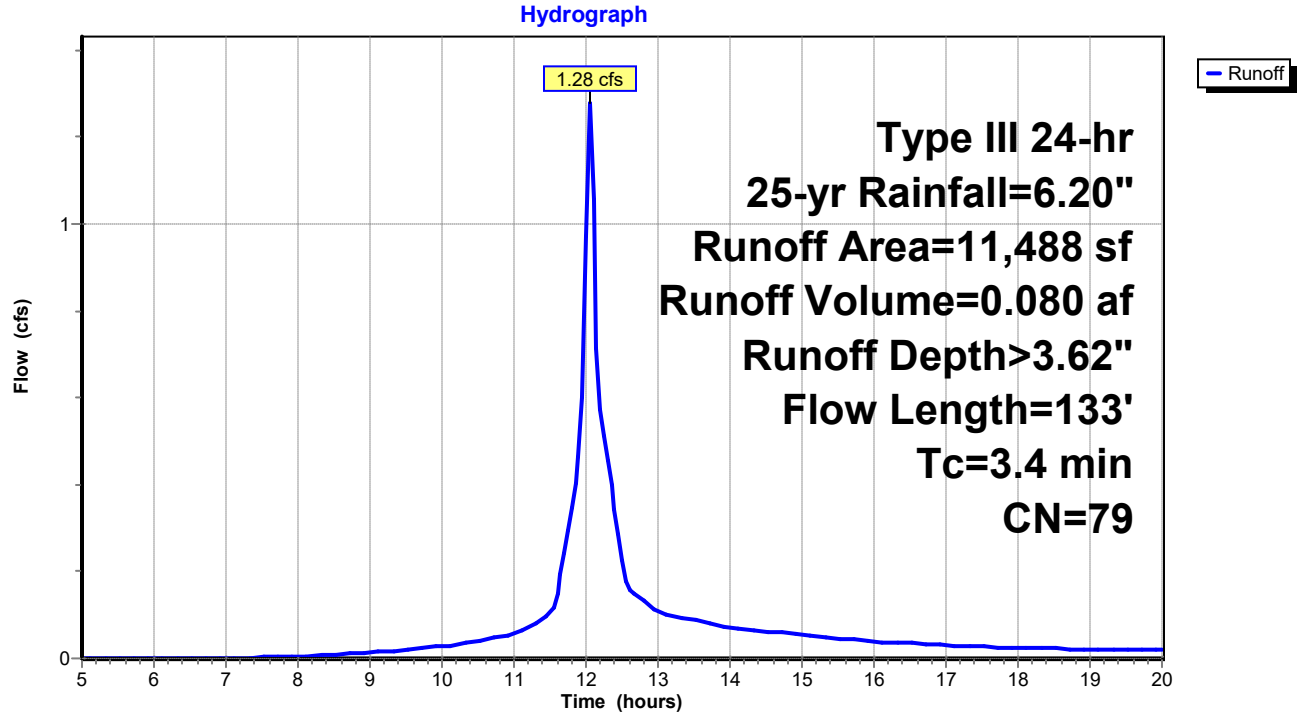

Summary for Subcatchment 3S: Post Subcatchment 3

Runoff = 1.57 cfs @ 12.07 hrs, Volume= 0.106 af, Depth> 4.13"
Routed to Pond 3P : Bioretention Filter Cell 2

Runoff by SCS TR-20 method, UH=SCS, Weighted-CN, Time Span= 5.00-20.00 hrs, dt= 0.05 hrs
Type III 24-hr 25-yr Rainfall=6.20"

	Area (sf)	CN	Description
	6,822	77	Woods, Good, HSG D
*	580	73	Biofiltration cell, Good, HSG D
*	3,768	98	Paved access drive, HSG D
	1,487	80	>75% Grass cover, Good, HSG D
*	708	98	Ledge, HSG D
	13,365	84	Weighted Average
	8,889		66.51% Pervious Area
	4,476		33.49% Impervious Area

Tc (min)	Length (feet)	Slope (ft/ft)	Velocity (ft/sec)	Capacity (cfs)	Description
4.2	43	0.2093	0.17		**Sheet Flow, Tc-1** Woods: Light underbrush n= 0.400 P2= 3.30"
0.7	214	0.0500	5.25	15.74	**Channel Flow, Tc-2** Area= 3.0 sf Perim= 9.2' r= 0.33' n= 0.030 Earth, grassed & winding
0.0	5	0.0500	3.35		**Shallow Concentrated Flow, Tc-3** Grassed Waterway Kv= 15.0 fps
4.9	262	Total			

Subcatchment 3S: Post Subcatchment 3

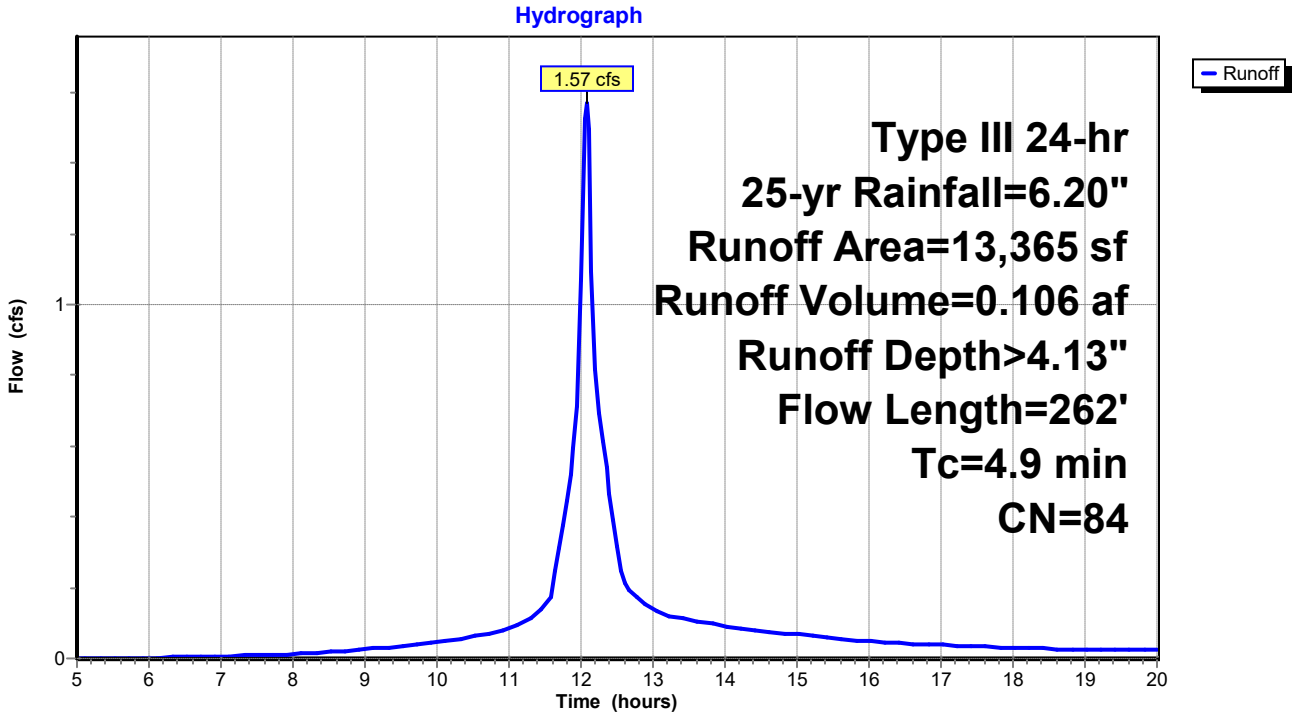

Summary for Subcatchment 4S: Post Subcatchment 4

Runoff = 1.72 cfs @ 12.11 hrs, Volume= 0.121 af, Depth> 3.61"
Routed to Link DP2 : DP2

Runoff by SCS TR-20 method, UH=SCS, Weighted-CN, Time Span= 5.00-20.00 hrs, dt= 0.05 hrs
Type III 24-hr 25-yr Rainfall=6.20"

	Area (sf)	CN	Description
*	295	98	Paved access drive, HSG D
	1,450	80	>75% Grass cover, Good, HSG D
	15,784	79	Woods, Fair, HSG D
	17,529	79	Weighted Average
	17,234		98.32% Pervious Area
	295		1.68% Impervious Area

Tc (min)	Length (feet)	Slope (ft/ft)	Velocity (ft/sec)	Capacity (cfs)	Description
6.8	62	0.1290	0.15		**Sheet Flow, Tc-1** Woods: Light underbrush n= 0.400 P2= 3.30"
0.4	64	0.2343	2.42		**Shallow Concentrated Flow, Tc-2** Woodland Kv= 5.0 fps
7.2	126	Total			

Subcatchment 4S: Post Subcatchment 4

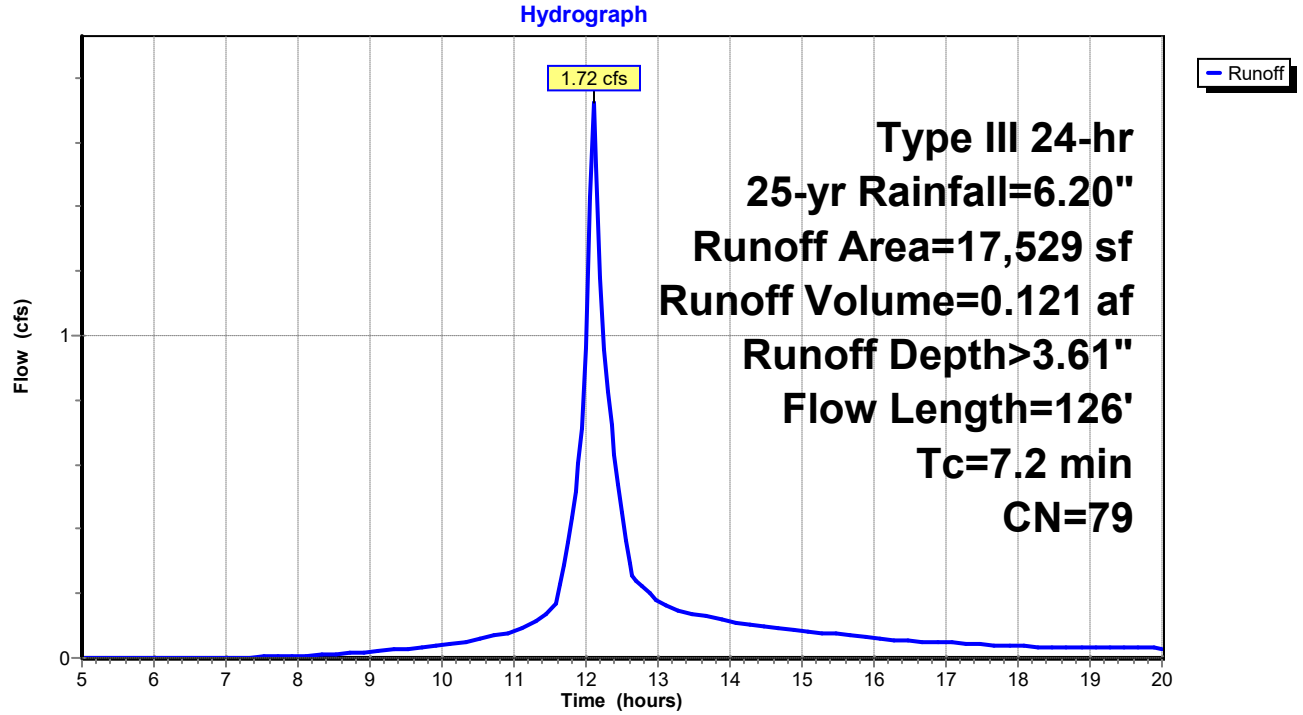

Summary for Subcatchment 5S: Post Subcatchment 5

Runoff = 5.99 cfs @ 12.10 hrs, Volume= 0.421 af, Depth> 3.72"
Routed to Reach DP3 : Shoreline 3

Runoff by SCS TR-20 method, UH=SCS, Weighted-CN, Time Span= 5.00-20.00 hrs, dt= 0.05 hrs
Type III 24-hr 25-yr Rainfall=6.20"

	Area (sf)	CN	Description
*	1,650	98	Paved acccess drive, HSG D
	751	98	Roofs, HSG D
*	6,955	88	Sand beach, HSG D
	3,872	96	Gravel surface, HSG D
	45,951	77	Woods, Good, HSG D
	59,179	80	Weighted Average
	56,778		95.94% Pervious Area
	2,401		4.06% Impervious Area

Tc (min)	Length (feet)	Slope (ft/ft)	Velocity (ft/sec)	Capacity (cfs)	Description
2.7	23	0.1740	0.14		**Sheet Flow, Tc-1** Woods: Light underbrush n= 0.400 P2= 3.30"
1.0	70	0.0574	1.20		**Shallow Concentrated Flow, Tc-2** Woodland Kv= 5.0 fps
0.5	170	0.1059	5.24		**Shallow Concentrated Flow, Tc-3** Unpaved Kv= 16.1 fps
2.5	140	0.0357	0.94		**Shallow Concentrated Flow, Tc-4** Woodland Kv= 5.0 fps
0.3	42	0.0714	2.67		**Shallow Concentrated Flow, Tc-5** Nearly Bare & Untilled Kv= 10.0 fps
7.0	445	Total			

Subcatchment 5S: Post Subcatchment 5

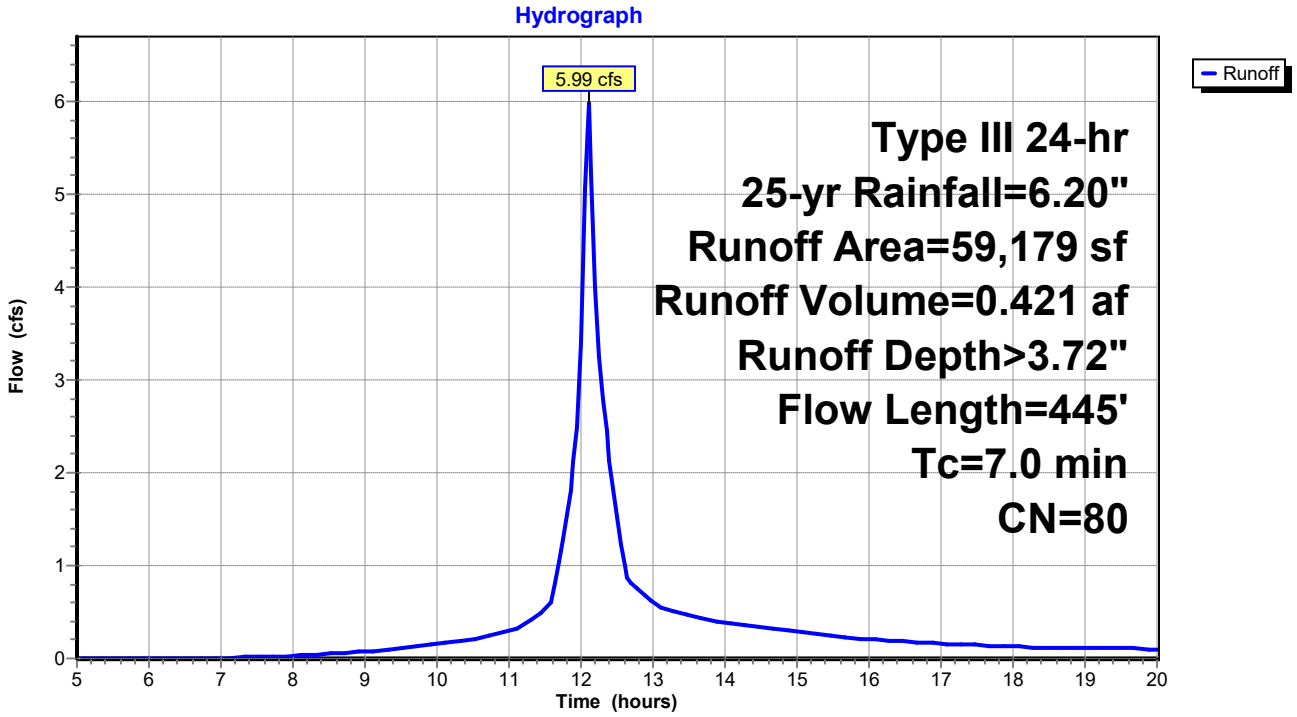

Summary for Reach 1R: Reach 1

Inflow Area = 0.226 ac, 50.01% Impervious, Inflow Depth > 4.39" for 25-yr event
Inflow = 1.33 cfs @ 12.02 hrs, Volume= 0.082 af
Outflow = 1.33 cfs @ 12.02 hrs, Volume= 0.082 af, Atten= 0%, Lag= 0.0 min
Routed to Link DP1 : DP1

Routing by Stor-Ind method, Time Span= 5.00-20.00 hrs, dt= 0.05 hrs

Reach 1R: Reach 1

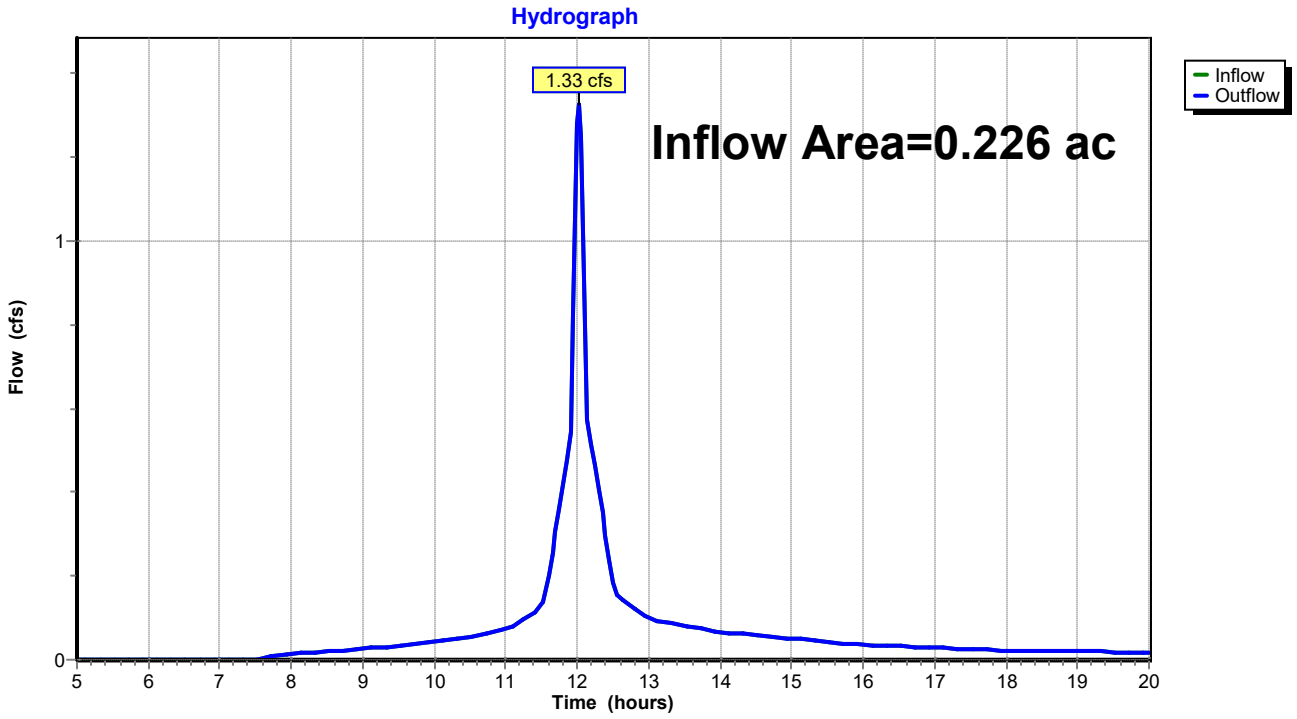

Summary for Reach 2R: Reach 2

Inflow Area = 0.307 ac, 33.49% Impervious, Inflow Depth > 3.99" for 25-yr event
Inflow = 1.50 cfs @ 12.11 hrs, Volume= 0.102 af
Outflow = 1.50 cfs @ 12.11 hrs, Volume= 0.102 af, Atten= 0%, Lag= 0.0 min
Routed to Link DP2 : DP2

Routing by Stor-Ind method, Time Span= 5.00-20.00 hrs, dt= 0.05 hrs

Reach 2R: Reach 2

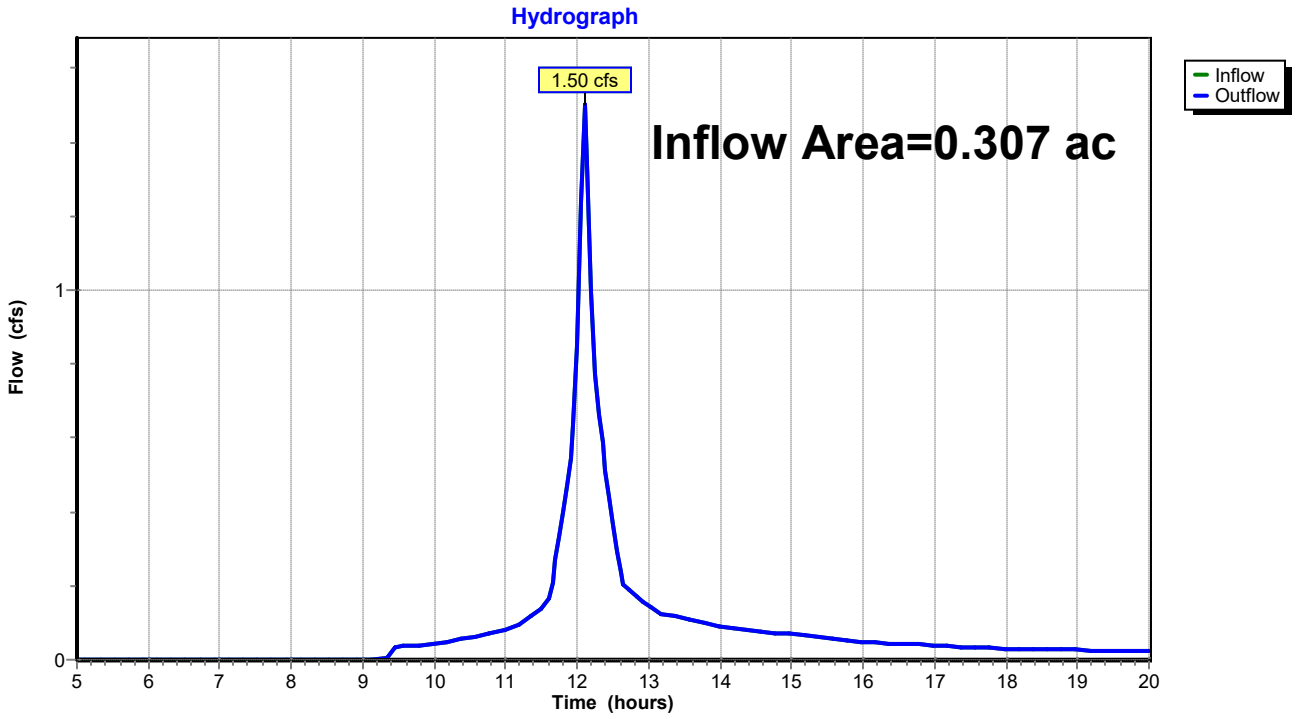

Summary for Reach DP3: Shoreline 3

Inflow Area = 1.359 ac, 4.06% Impervious, Inflow Depth > 3.72" for 25-yr event
Inflow = 5.99 cfs @ 12.10 hrs, Volume= 0.421 af
Outflow = 5.99 cfs @ 12.10 hrs, Volume= 0.421 af, Atten= 0%, Lag= 0.0 min
Routed to Reach SP1 : SACO RIVER / OCEAN

Routing by Stor-Ind method, Time Span= 5.00-20.00 hrs, dt= 0.05 hrs

Reach DP3: Shoreline 3

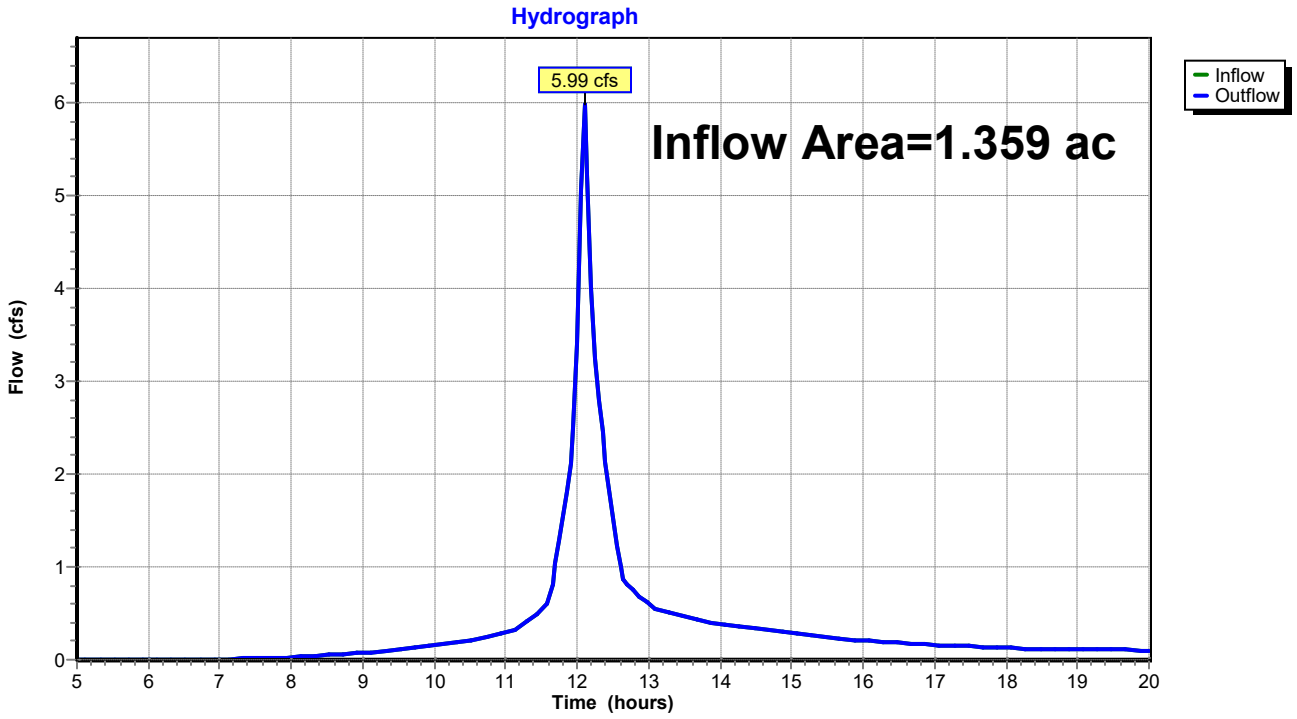

Summary for Reach SP1: SACO RIVER / OCEAN

Inflow Area = 2.557 ac, 11.96% Impervious, Inflow Depth > 3.78" for 25-yr event
Inflow = 11.09 cfs @ 12.09 hrs, Volume= 0.806 af
Outflow = 11.09 cfs @ 12.09 hrs, Volume= 0.806 af, Atten= 0%, Lag= 0.0 min

Routing by Stor-Ind method, Time Span= 5.00-20.00 hrs, dt= 0.05 hrs

Reach SP1: SACO RIVER / OCEAN

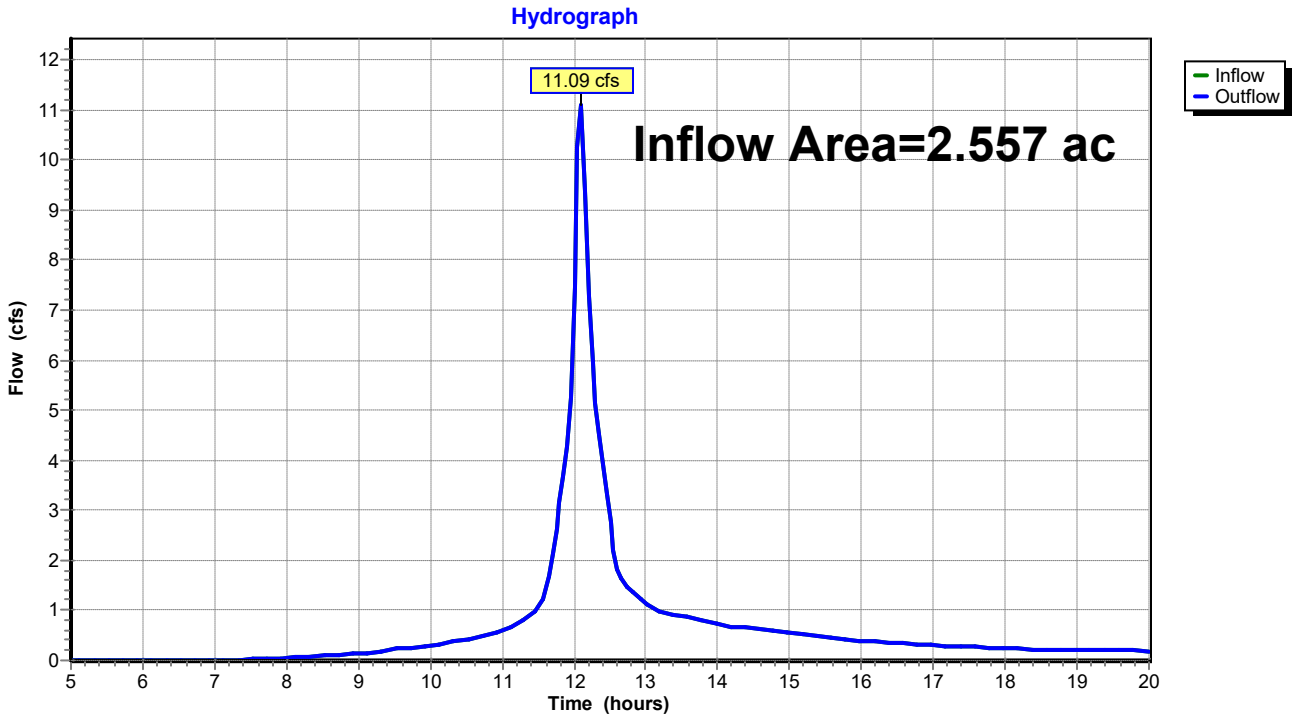

Summary for Pond 1P: Bioretention Filter Cell 1

Inflow Area = 0.226 ac, 50.01% Impervious, Inflow Depth > 4.45" for 25-yr event
Inflow = 1.36 cfs @ 12.01 hrs, Volume= 0.084 af
Outflow = 1.33 cfs @ 12.02 hrs, Volume= 0.082 af, Atten= 2%, Lag= 0.6 min
Primary = 1.33 cfs @ 12.02 hrs, Volume= 0.082 af
Routed to Pond 2P : CB-1

Routing by Stor-Ind method, Time Span= 5.00-20.00 hrs, dt= 0.05 hrs
Peak Elev= 18.20' @ 12.02 hrs Surf.Area= 275 sf Storage= 101 cf

Plug-Flow detention time= 12.6 min calculated for 0.082 af (98% of inflow)
Center-of-Mass det. time= 6.1 min (765.1 - 758.9)

Volume	Invert	Avail.Storage	Storage Description
#1	17.50'	200 cf	**Custom Stage Data (Prismatic)** Listed below (Recalc)

Elevation (feet)	Surf.Area (sq-ft)	Inc.Store (cubic-feet)	Cum.Store (cubic-feet)
17.50	0	0	0
18.00	213	53	53
18.50	372	146	200

Device	Routing	Invert	Outlet Devices
#1	Primary	18.00'	**18.0" Horiz. Orifice/Grate** C= 0.600 in 24.0" Grate (56% open area) Limited to weir flow at low heads

Primary OutFlow Max=1.27 cfs @ 12.02 hrs HW=18.19' (Free Discharge)
↑—**1=Orifice/Grate** (Weir Controls 1.27 cfs @ 1.42 fps)

Pond 1P: Bioretention Filter Cell 1

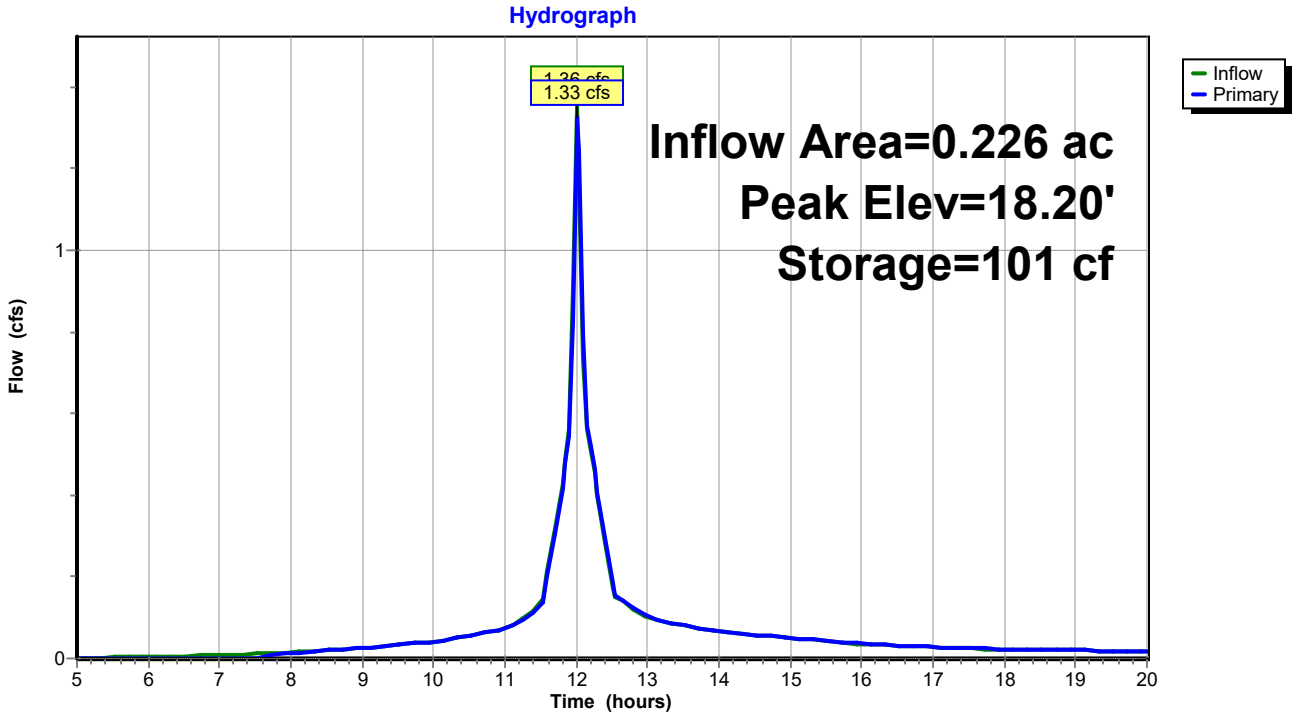

Summary for Pond 2P: CB-1

Inflow Area = 0.226 ac, 50.01% Impervious, Inflow Depth > 4.39" for 25-yr event
Inflow = 1.33 cfs @ 12.02 hrs, Volume= 0.082 af
Outflow = 1.33 cfs @ 12.02 hrs, Volume= 0.082 af, Atten= 0%, Lag= 0.0 min
Primary = 1.33 cfs @ 12.02 hrs, Volume= 0.082 af
Routed to Reach 1R : Reach 1

Routing by Stor-Ind method, Time Span= 5.00-20.00 hrs, dt= 0.05 hrs
Peak Elev= 14.38' @ 12.02 hrs

Device	Routing	Invert	Outlet Devices
#1	Primary	13.75'	**15.0" Round Culvert** L= 48.0' CPP, projecting, no headwall, Ke= 0.900 Inlet / Outlet Invert= 13.75' / 12.00' S= 0.0365 '/' Cc= 0.900 n= 0.013 Corrugated PE, smooth interior, Flow Area= 1.23 sf

Primary OutFlow Max=1.27 cfs @ 12.02 hrs HW=14.36' (Free Discharge)
1=Culvert (Inlet Controls 1.27 cfs @ 2.11 fps)

Pond 2P: CB-1

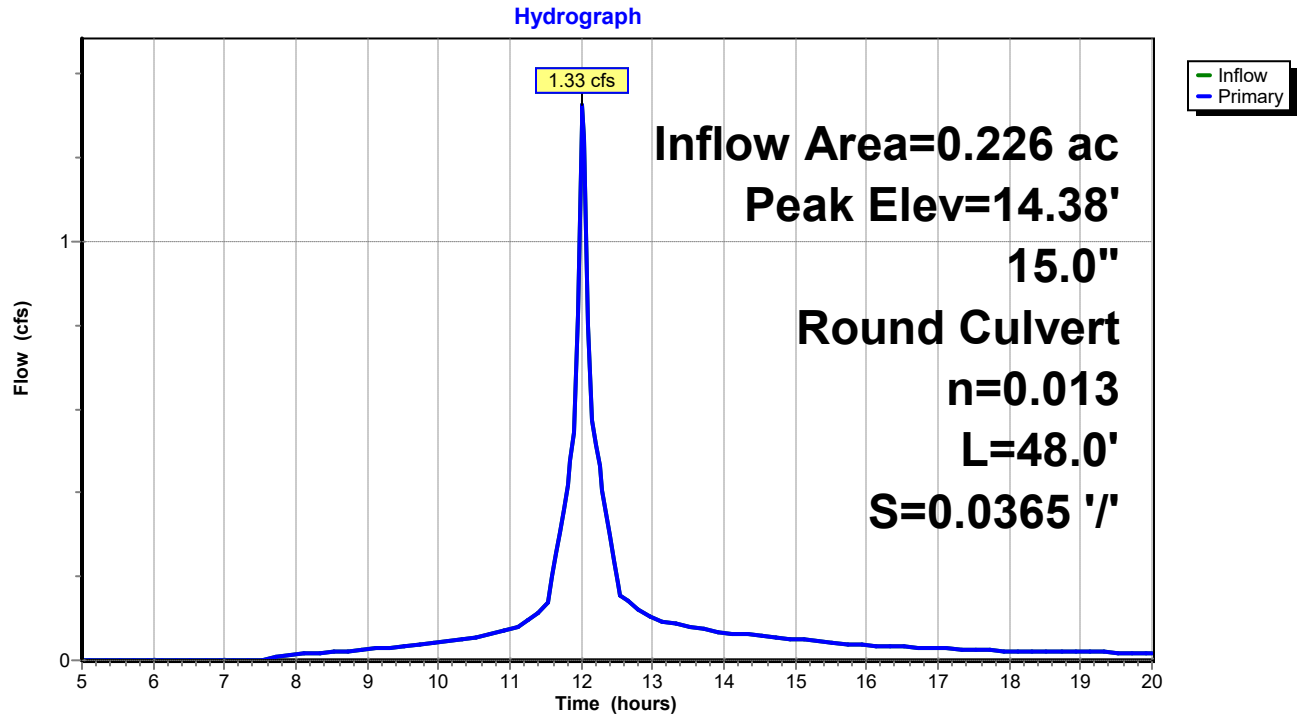

Summary for Pond 3P: Bioretention Filter Cell 2

Inflow Area = 0.307 ac, 33.49% Impervious, Inflow Depth > 4.13" for 25-yr event
Inflow = 1.57 cfs @ 12.07 hrs, Volume= 0.106 af
Outflow = 1.56 cfs @ 12.08 hrs, Volume= 0.105 af, Atten= 1%, Lag= 0.6 min
Primary = 1.56 cfs @ 12.08 hrs, Volume= 0.105 af
Routed to Pond 4P : CB-2

Routing by Stor-Ind method, Time Span= 5.00-20.00 hrs, dt= 0.05 hrs
Peak Elev= 23.72' @ 12.08 hrs Surf.Area= 240 sf Storage= 86 cf

Plug-Flow detention time= 7.6 min calculated for 0.104 af (99% of inflow)
Center-of-Mass det. time= 3.8 min (773.5 - 769.7)

Volume	Invert	Avail.Storage	Storage Description
#1	23.00'	380 cf	**Custom Stage Data (Prismatic)** Listed below (Recalc)

Elevation (feet)	Surf.Area (sq-ft)	Inc.Store (cubic-feet)	Cum.Store (cubic-feet)
23.00	0	0	0
24.00	335	168	168
24.50	515	213	380

Device	Routing	Invert	Outlet Devices
#1	Primary	23.50'	**18.0" Horiz. Orifice/Grate** C= 0.600 in 24.0" Grate (56% open area) Limited to weir flow at low heads

Primary OutFlow Max=1.51 cfs @ 12.08 hrs HW=23.71' (Free Discharge)
↑**1=Orifice/Grate** (Weir Controls 1.51 cfs @ 1.51 fps)

Pond 3P: Bioretention Filter Cell 2

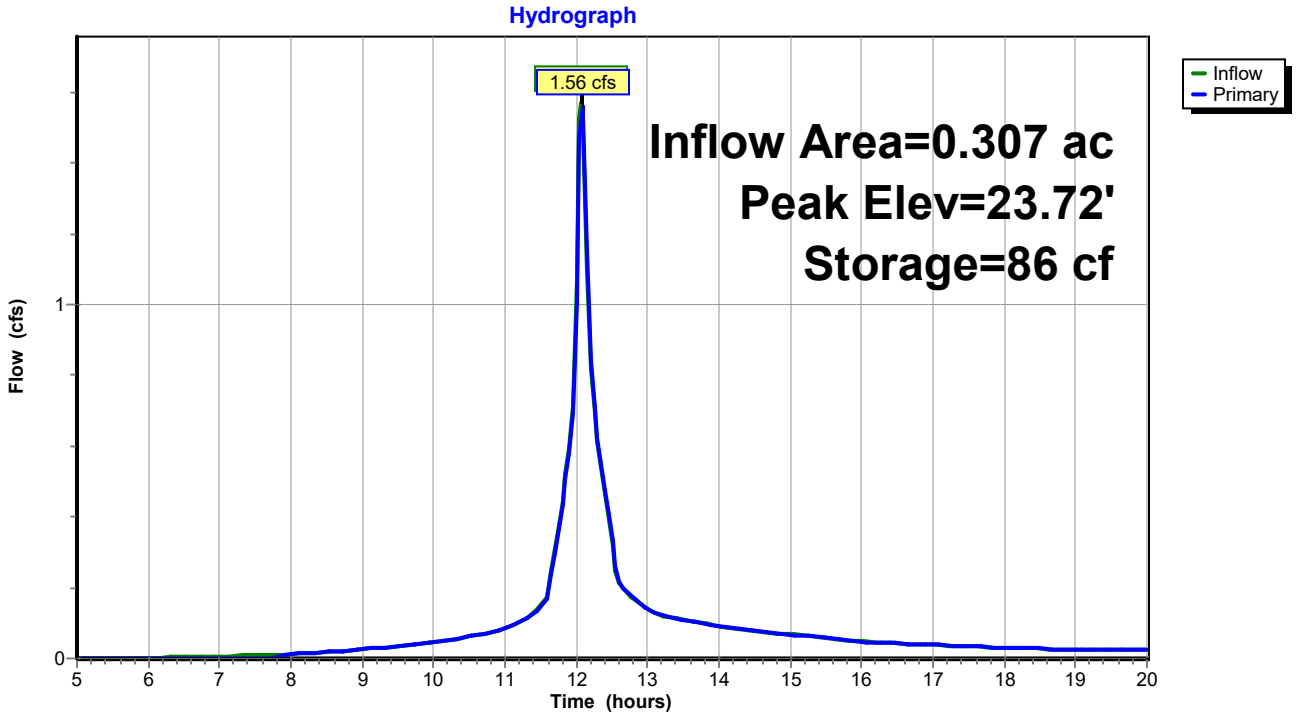

Summary for Pond 4P: CB-2

Inflow Area = 0.307 ac, 33.49% Impervious, Inflow Depth > 4.09" for 25-yr event
Inflow = 1.56 cfs @ 12.08 hrs, Volume= 0.105 af
Outflow = 1.56 cfs @ 12.08 hrs, Volume= 0.105 af, Atten= 0%, Lag= 0.0 min
Primary = 1.56 cfs @ 12.08 hrs, Volume= 0.105 af
Routed to Pond 5P : Level Lip Speader

Routing by Stor-Ind method, Time Span= 5.00-20.00 hrs, dt= 0.05 hrs
Peak Elev= 19.39' @ 12.08 hrs

Device	Routing	Invert	Outlet Devices
#1	Primary	18.75'	**18.0" Round Culvert** L= 40.0' CPP, projecting, no headwall, Ke= 0.900 Inlet / Outlet Invert= 18.75' / 18.00' S= 0.0187 '/' Cc= 0.900 n= 0.013 Corrugated PE, smooth interior, Flow Area= 1.77 sf

Primary OutFlow Max=1.51 cfs @ 12.08 hrs HW=19.38' (Free Discharge)
1=Culvert (Inlet Controls 1.51 cfs @ 2.13 fps)

Pond 4P: CB-2

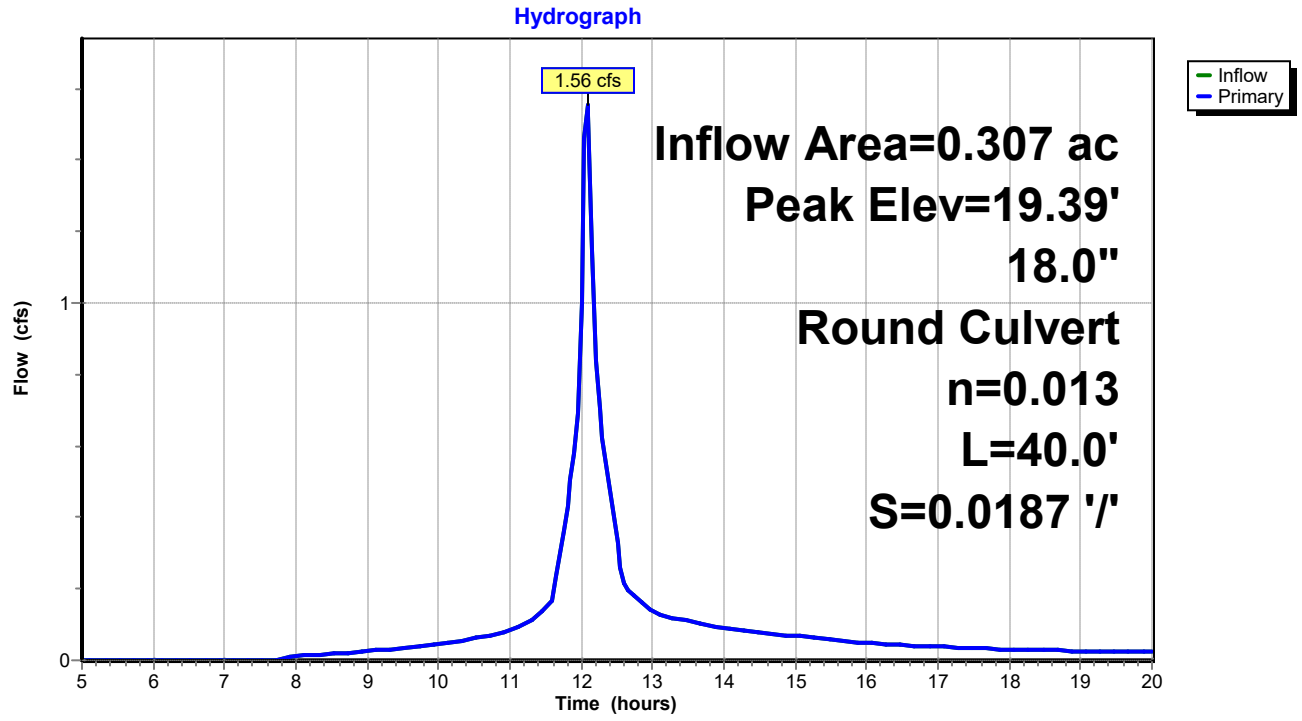

Summary for Pond 5P: Level Lip Speader

Inflow Area = 0.307 ac, 33.49% Impervious, Inflow Depth > 4.09" for 25-yr event
Inflow = 1.56 cfs @ 12.08 hrs, Volume= 0.105 af
Outflow = 1.50 cfs @ 12.11 hrs, Volume= 0.102 af, Atten= 4%, Lag= 1.4 min
Primary = 1.50 cfs @ 12.11 hrs, Volume= 0.102 af
Routed to Reach 2R : Reach 2

Routing by Stor-Ind method, Time Span= 5.00-20.00 hrs, dt= 0.05 hrs
Peak Elev= 18.00' @ 9.40 hrs Surf.Area= 168 sf Storage= 115 cf
Flood Elev= 20.00' Surf.Area= 168 sf Storage= 115 cf

Plug-Flow detention time= 17.8 min calculated for 0.102 af (97% of inflow)
Center-of-Mass det. time= 7.7 min (781.2 - 773.5)

Volume	Invert	Avail.Storage	Storage Description
#1	17.00'	115 cf	**Custom Stage Data (Prismatic)** Listed below (Recalc)

Elevation (feet)	Surf.Area (sq-ft)	Voids (%)	Inc.Store (cubic-feet)	Cum.Store (cubic-feet)
17.00	61	0.0	0	0
18.00	168	100.0	115	115

Device	Routing	Invert	Outlet Devices
#0	Primary	18.00'	**Automatic Storage Overflow** (Discharged without head)

Primary OutFlow Max=0.00 cfs @ 12.11 hrs HW=18.00' (Free Discharge)

Pond 5P: Level Lip Speader

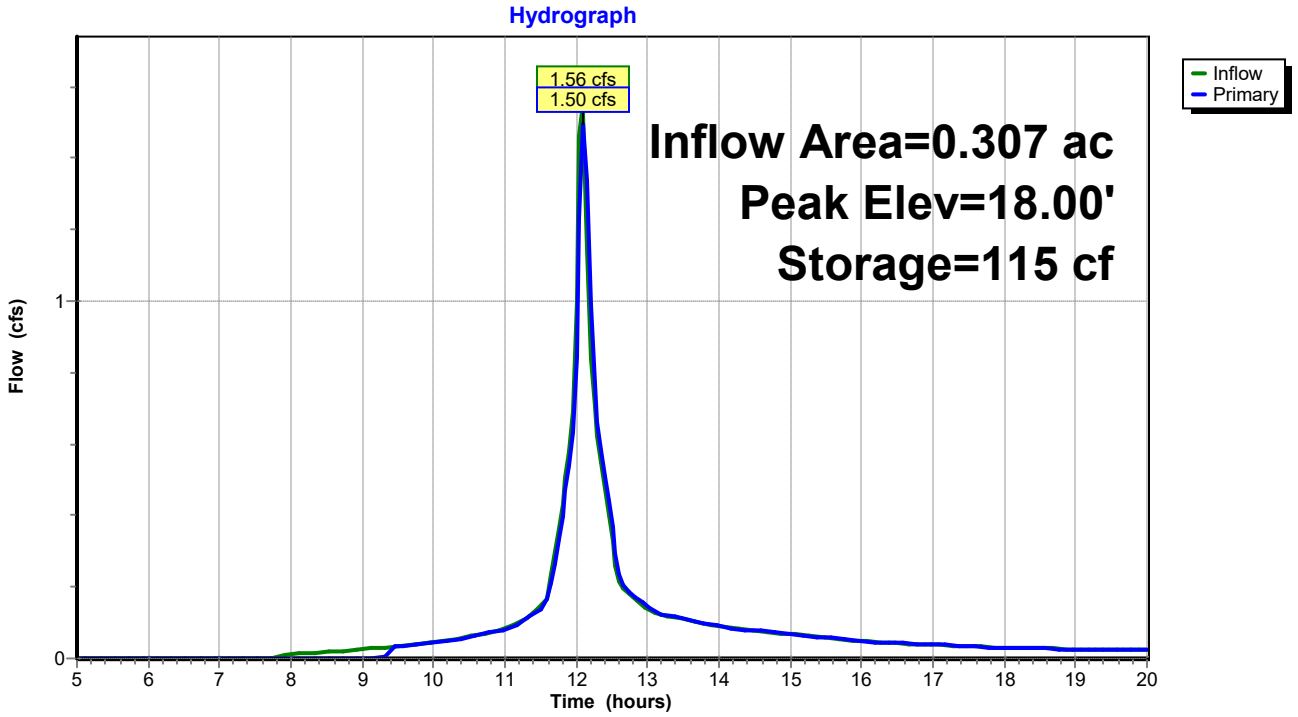

Summary for Link DP1: DP1

Inflow Area = 0.489 ac, 28.87% Impervious, Inflow Depth > 3.97" for 25-yr event
Inflow = 2.54 cfs @ 12.04 hrs, Volume= 0.162 af
Primary = 2.54 cfs @ 12.04 hrs, Volume= 0.162 af, Atten= 0%, Lag= 0.0 min
Routed to Reach SP1 : SACO RIVER / OCEAN

Primary outflow = Inflow, Time Span= 5.00-20.00 hrs, dt= 0.05 hrs

Link DP1: DP1

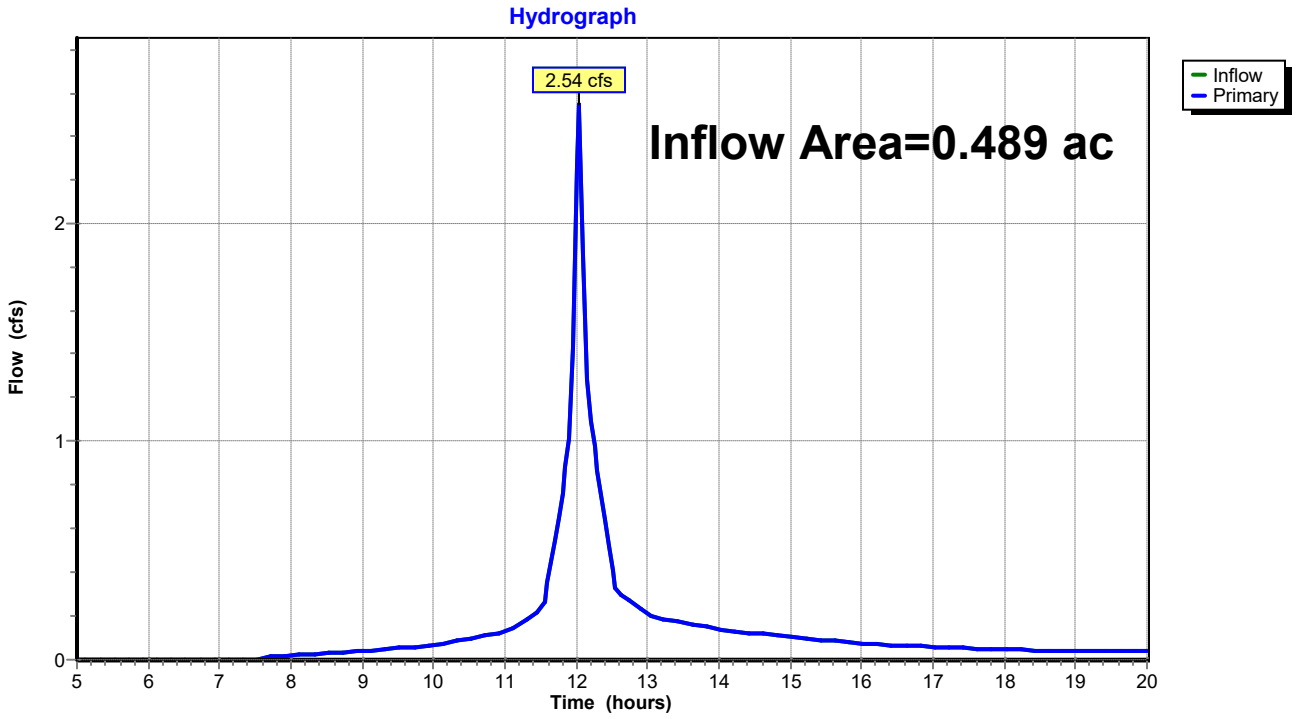

Summary for Link DP2: DP2

Inflow Area = 0.709 ac, 15.44% Impervious, Inflow Depth > 3.77" for 25-yr event
Inflow = 3.22 cfs @ 12.11 hrs, Volume= 0.223 af
Primary = 3.22 cfs @ 12.11 hrs, Volume= 0.223 af, Atten= 0%, Lag= 0.0 min
Routed to Reach SP1 : SACO RIVER / OCEAN

Primary outflow = Inflow, Time Span= 5.00-20.00 hrs, dt= 0.05 hrs

Link DP2: DP2

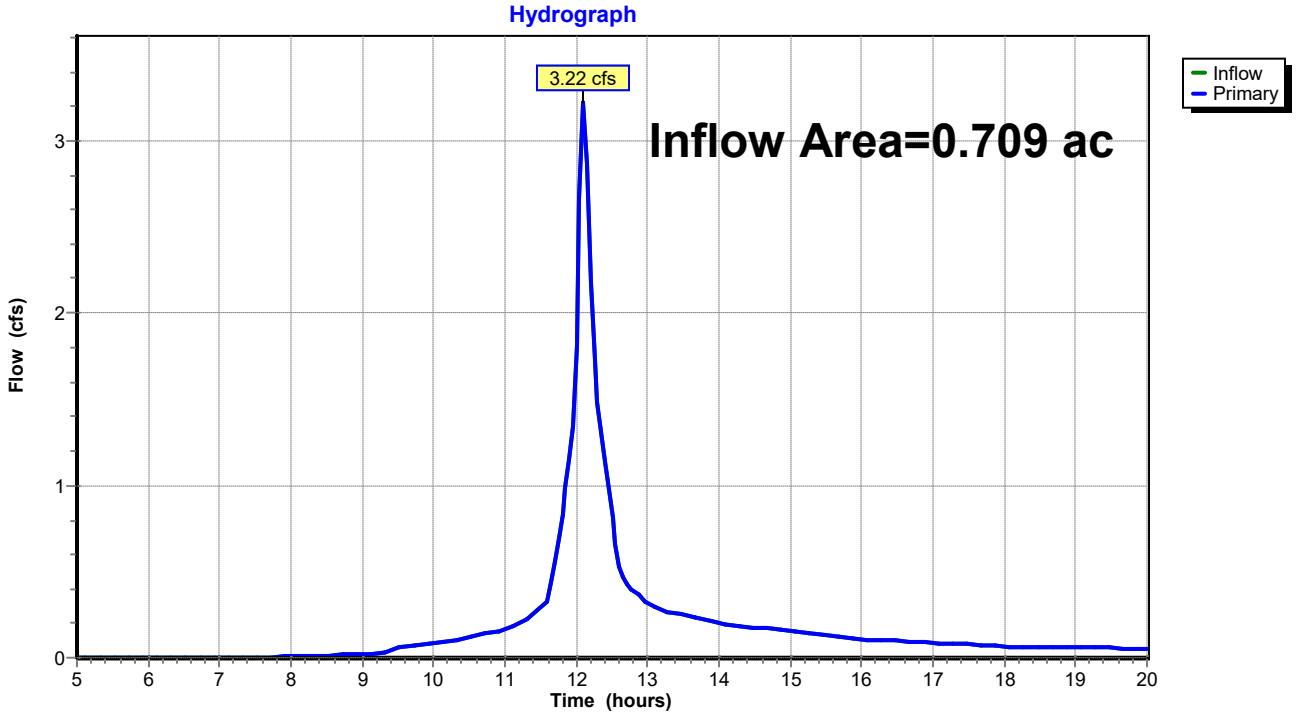

Time span=5.00-20.00 hrs, dt=0.05 hrs, 301 points
Runoff by SCS TR-20 method, UH=SCS, Weighted-CN
Reach routing by Stor-Ind method - Pond routing by Stor-Ind method

Subcatchment 1S: Post Subcatchment 1 Runoff Area=9,832 sf 50.01% Impervious Runoff Depth>6.75"
Flow Length=172' Tc=0.8 min CN=87 Runoff=2.01 cfs 0.127 af

Subcatchment 2S: Post Subcatchment 2 Runoff Area=11,488 sf 10.78% Impervious Runoff Depth>5.81"
Flow Length=133' Tc=3.4 min CN=79 Runoff=2.01 cfs 0.128 af

Subcatchment 3S: Post Subcatchment 3 Runoff Area=13,365 sf 33.49% Impervious Runoff Depth>6.40"
Flow Length=262' Tc=4.9 min CN=84 Runoff=2.37 cfs 0.164 af

Subcatchment 4S: Post Subcatchment 4 Runoff Area=17,529 sf 1.68% Impervious Runoff Depth>5.80"
Flow Length=126' Tc=7.2 min CN=79 Runoff=2.71 cfs 0.195 af

Subcatchment 5S: Post Subcatchment 5 Runoff Area=59,179 sf 4.06% Impervious Runoff Depth>5.92"
Flow Length=445' Tc=7.0 min CN=80 Runoff=9.35 cfs 0.670 af

Reach 1R: Reach 1 Inflow=1.97 cfs 0.126 af
Outflow=1.97 cfs 0.126 af

Reach 2R: Reach 2 Inflow=2.27 cfs 0.160 af
Outflow=2.27 cfs 0.160 af

Reach DP3: Shoreline 3 Inflow=9.35 cfs 0.670 af
Outflow=9.35 cfs 0.670 af

Reach SP1: SACO RIVER / OCEAN Inflow=17.21 cfs 1.278 af
Outflow=17.21 cfs 1.278 af

Pond 1P: Bioretention Filter Cell 1 Peak Elev=18.25' Storage=118 cf Inflow=2.01 cfs 0.127 af
Outflow=1.97 cfs 0.126 af

Pond 2P: CB-1 Peak Elev=14.54' Inflow=1.97 cfs 0.126 af
15.0" Round Culvert n=0.013 L=48.0' S=0.0365 '/' Outflow=1.97 cfs 0.126 af

Pond 3P: Bioretention Filter Cell 2 Peak Elev=23.79' Storage=103 cf Inflow=2.37 cfs 0.164 af
Outflow=2.35 cfs 0.163 af

Pond 4P: CB-2 Peak Elev=19.56' Inflow=2.35 cfs 0.163 af
18.0" Round Culvert n=0.013 L=40.0' S=0.0187 '/' Outflow=2.35 cfs 0.163 af

Pond 5P: Level Lip Speader Peak Elev=18.00' Storage=115 cf Inflow=2.35 cfs 0.163 af
Outflow=2.27 cfs 0.160 af

Link DP1: DP1 Inflow=3.88 cfs 0.253 af
Primary=3.88 cfs 0.253 af

Link DP2: DP2 Inflow=4.98 cfs 0.354 af
Primary=4.98 cfs 0.354 af

Total Runoff Area = 2.557 ac Runoff Volume = 1.283 af Average Runoff Depth = 6.02"
88.04% Pervious = 2.251 ac 11.96% Impervious = 0.306 ac

Summary for Subcatchment 1S: Post Subcatchment 1

Runoff = 2.01 cfs @ 12.01 hrs, Volume= 0.127 af, Depth> 6.75"
Routed to Pond 1P : Bioretention Filter Cell 1

Runoff by SCS TR-20 method, UH=SCS, Weighted-CN, Time Span= 5.00-20.00 hrs, dt= 0.05 hrs
Type III 24-hr 100-yr Rainfall=8.70"

	Area (sf)	CN	Description
	3,430	77	Woods, Good, HSG D
*	982	98	Ledge, HSG D
	595	80	>75% Grass cover, Good, HSG D
*	3,935	98	Paved Access Drive, HSG D
*	890	73	Bioretention Filter Cell, Good, HSG D
	9,832	87	Weighted Average
	4,915		49.99% Pervious Area
	4,917		50.01% Impervious Area

Tc (min)	Length (feet)	Slope (ft/ft)	Velocity (ft/sec)	Capacity (cfs)	Description
0.4	46	0.0500	1.73		**Sheet Flow, Tc-1** Smooth surfaces n= 0.011 P2= 3.30"
0.3	102	0.0500	5.25	15.74	**Channel Flow, Tc-2** Area= 3.0 sf Perim= 9.2' r= 0.33' n= 0.030 Earth, grassed & winding
0.1	24	0.0625	3.75		**Shallow Concentrated Flow, Tc-3** Grassed Waterway Kv= 15.0 fps
0.8	172	Total			

Subcatchment 1S: Post Subcatchment 1

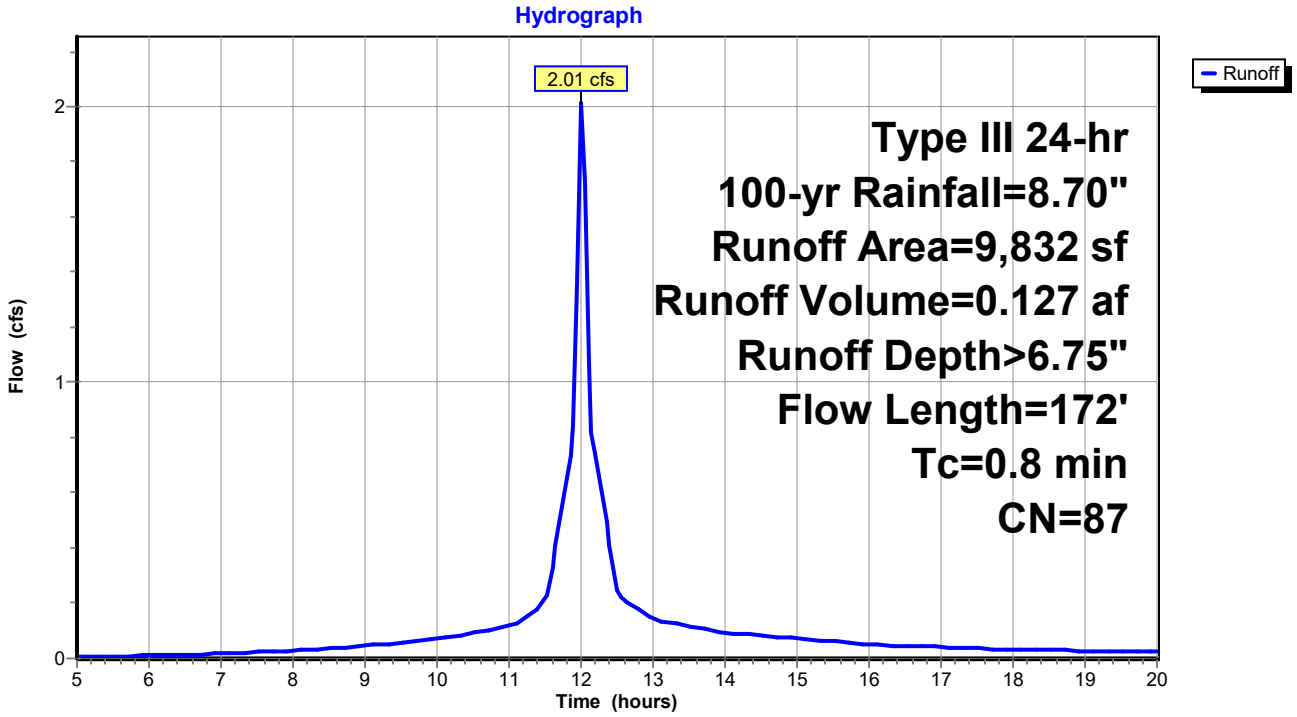

Summary for Subcatchment 2S: Post Subcatchment 2

Runoff = 2.01 cfs @ 12.05 hrs, Volume= 0.128 af, Depth> 5.81"
Routed to Link DP1 : DP1

Runoff by SCS TR-20 method, UH=SCS, Weighted-CN, Time Span= 5.00-20.00 hrs, dt= 0.05 hrs
Type III 24-hr 100-yr Rainfall=8.70"

Area (sf)	CN	Description
10,250	77	Woods, Good, HSG D
1,238	98	Paved parking, HSG D
11,488	79	Weighted Average
10,250		89.22% Pervious Area
1,238		10.78% Impervious Area

Tc (min)	Length (feet)	Slope (ft/ft)	Velocity (ft/sec)	Capacity (cfs)	Description
2.5	21	0.1905	0.14		**Sheet Flow, Tc-1** Woods: Light underbrush n= 0.400 P2= 3.30"
0.9	112	0.1696	2.06		**Shallow Concentrated Flow, Tc-2** Woodland Kv= 5.0 fps
3.4	133	Total			

Subcatchment 2S: Post Subcatchment 2

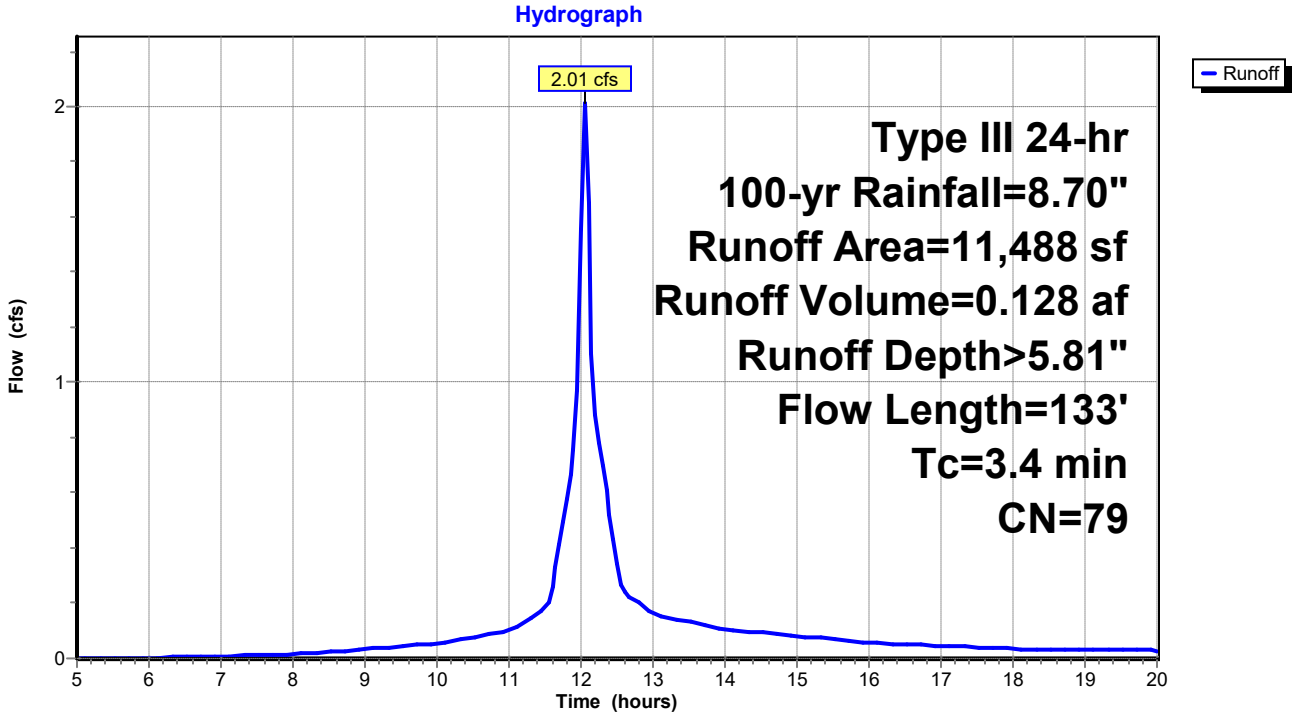

Summary for Subcatchment 3S: Post Subcatchment 3

Runoff = 2.37 cfs @ 12.07 hrs, Volume= 0.164 af, Depth> 6.40"
Routed to Pond 3P : Bioretention Filter Cell 2

Runoff by SCS TR-20 method, UH=SCS, Weighted-CN, Time Span= 5.00-20.00 hrs, dt= 0.05 hrs
Type III 24-hr 100-yr Rainfall=8.70"

	Area (sf)	CN	Description
	6,822	77	Woods, Good, HSG D
*	580	73	Biofiltration cell, Good, HSG D
*	3,768	98	Paved access drive, HSG D
	1,487	80	>75% Grass cover, Good, HSG D
*	708	98	Ledge, HSG D
	13,365	84	Weighted Average
	8,889		66.51% Pervious Area
	4,476		33.49% Impervious Area

Tc (min)	Length (feet)	Slope (ft/ft)	Velocity (ft/sec)	Capacity (cfs)	Description
4.2	43	0.2093	0.17		**Sheet Flow, Tc-1** Woods: Light underbrush n= 0.400 P2= 3.30"
0.7	214	0.0500	5.25	15.74	**Channel Flow, Tc-2** Area= 3.0 sf Perim= 9.2' r= 0.33' n= 0.030 Earth, grassed & winding
0.0	5	0.0500	3.35		**Shallow Concentrated Flow, Tc-3** Grassed Waterway Kv= 15.0 fps
4.9	262	Total			

Subcatchment 3S: Post Subcatchment 3

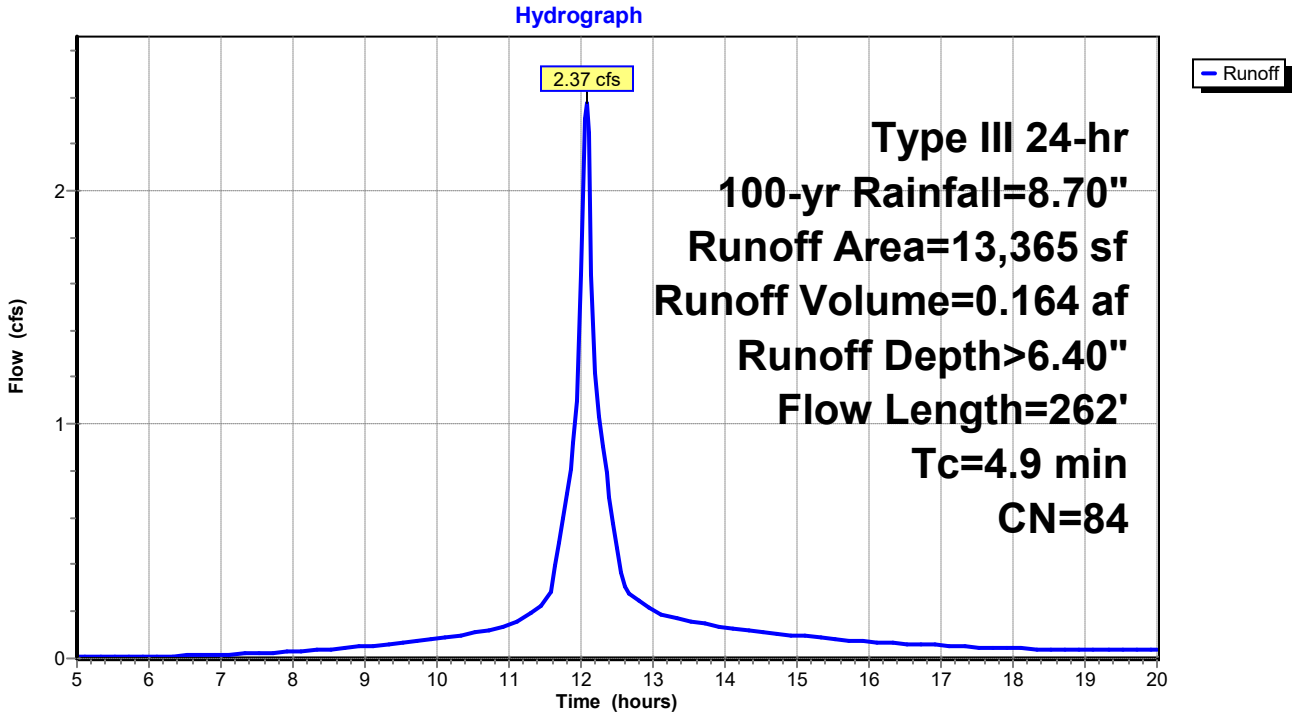

Summary for Subcatchment 4S: Post Subcatchment 4

Runoff = 2.71 cfs @ 12.10 hrs, Volume= 0.195 af, Depth> 5.80"
Routed to Link DP2 : DP2

Runoff by SCS TR-20 method, UH=SCS, Weighted-CN, Time Span= 5.00-20.00 hrs, dt= 0.05 hrs
Type III 24-hr 100-yr Rainfall=8.70"

	Area (sf)	CN	Description
*	295	98	Paved access drive, HSG D
	1,450	80	>75% Grass cover, Good, HSG D
	15,784	79	Woods, Fair, HSG D
	17,529	79	Weighted Average
	17,234		98.32% Pervious Area
	295		1.68% Impervious Area

Tc (min)	Length (feet)	Slope (ft/ft)	Velocity (ft/sec)	Capacity (cfs)	Description
6.8	62	0.1290	0.15		**Sheet Flow, Tc-1** Woods: Light underbrush n= 0.400 P2= 3.30"
0.4	64	0.2343	2.42		**Shallow Concentrated Flow, Tc-2** Woodland Kv= 5.0 fps
7.2	126	Total			

Subcatchment 4S: Post Subcatchment 4

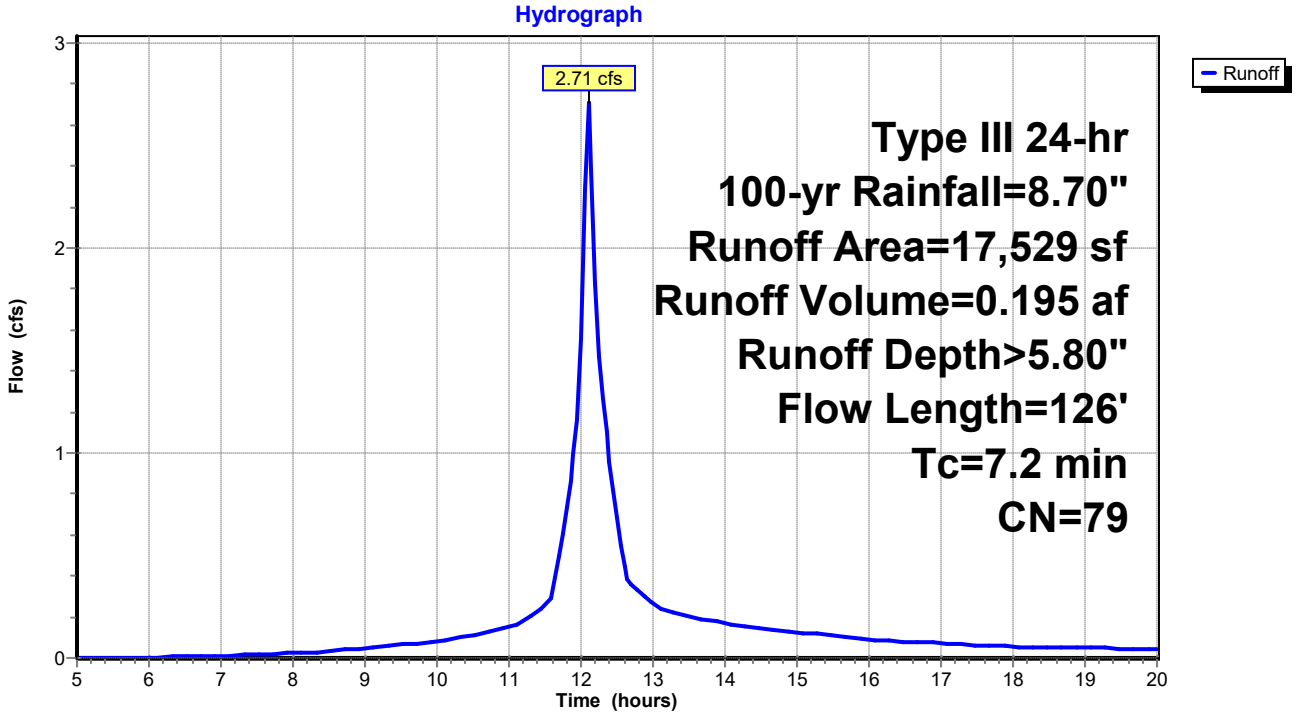

Summary for Subcatchment 5S: Post Subcatchment 5

Runoff = 9.35 cfs @ 12.10 hrs, Volume= 0.670 af, Depth> 5.92"
Routed to Reach DP3 : Shoreline 3

Runoff by SCS TR-20 method, UH=SCS, Weighted-CN, Time Span= 5.00-20.00 hrs, dt= 0.05 hrs
Type III 24-hr 100-yr Rainfall=8.70"

	Area (sf)	CN	Description
*	1,650	98	Paved acccess drive, HSG D
	751	98	Roofs, HSG D
*	6,955	88	Sand beach, HSG D
	3,872	96	Gravel surface, HSG D
	45,951	77	Woods, Good, HSG D
	59,179	80	Weighted Average
	56,778		95.94% Pervious Area
	2,401		4.06% Impervious Area

Tc (min)	Length (feet)	Slope (ft/ft)	Velocity (ft/sec)	Capacity (cfs)	Description
2.7	23	0.1740	0.14		**Sheet Flow, Tc-1** Woods: Light underbrush n= 0.400 P2= 3.30"
1.0	70	0.0574	1.20		**Shallow Concentrated Flow, Tc-2** Woodland Kv= 5.0 fps
0.5	170	0.1059	5.24		**Shallow Concentrated Flow, Tc-3** Unpaved Kv= 16.1 fps
2.5	140	0.0357	0.94		**Shallow Concentrated Flow, Tc-4** Woodland Kv= 5.0 fps
0.3	42	0.0714	2.67		**Shallow Concentrated Flow, Tc-5** Nearly Bare & Untilled Kv= 10.0 fps
7.0	445	Total			

Subcatchment 5S: Post Subcatchment 5

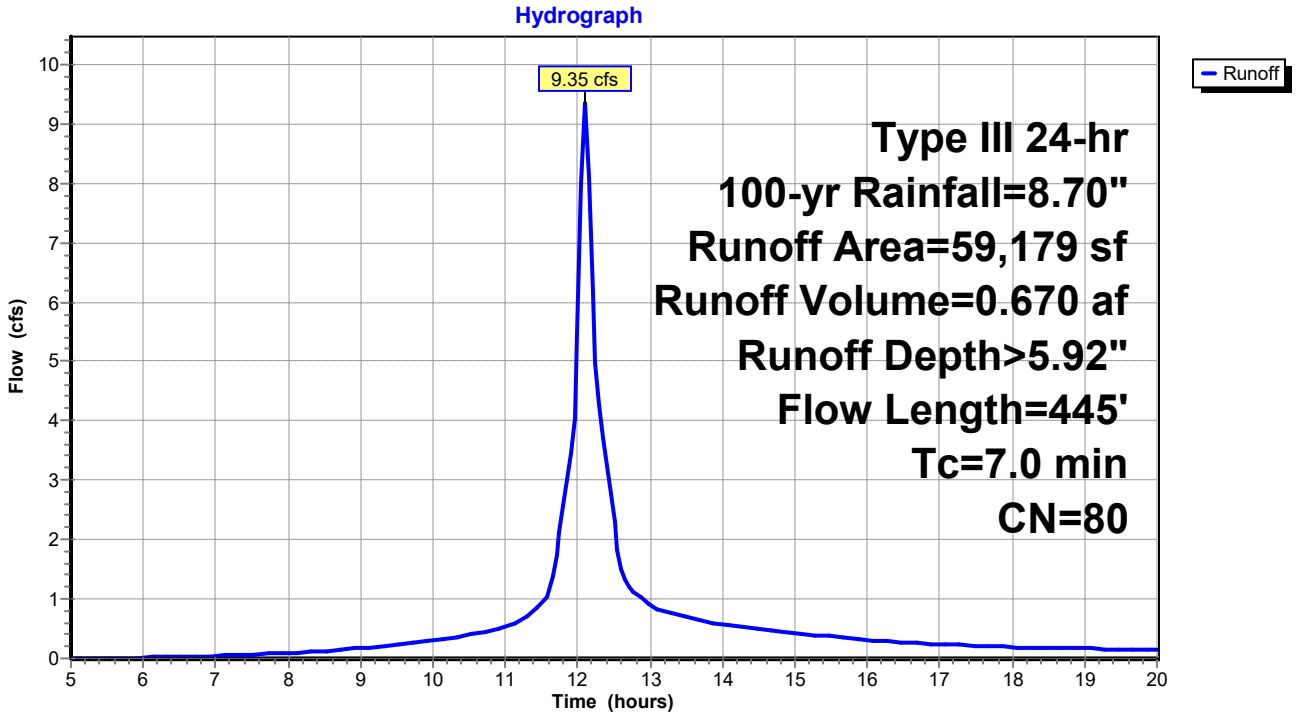

Summary for Reach 1R: Reach 1

Inflow Area = 0.226 ac, 50.01% Impervious, Inflow Depth > 6.68" for 100-yr event
Inflow = 1.97 cfs @ 12.02 hrs, Volume= 0.126 af
Outflow = 1.97 cfs @ 12.02 hrs, Volume= 0.126 af, Atten= 0%, Lag= 0.0 min
Routed to Link DP1 : DP1

Routing by Stor-Ind method, Time Span= 5.00-20.00 hrs, dt= 0.05 hrs

Reach 1R: Reach 1

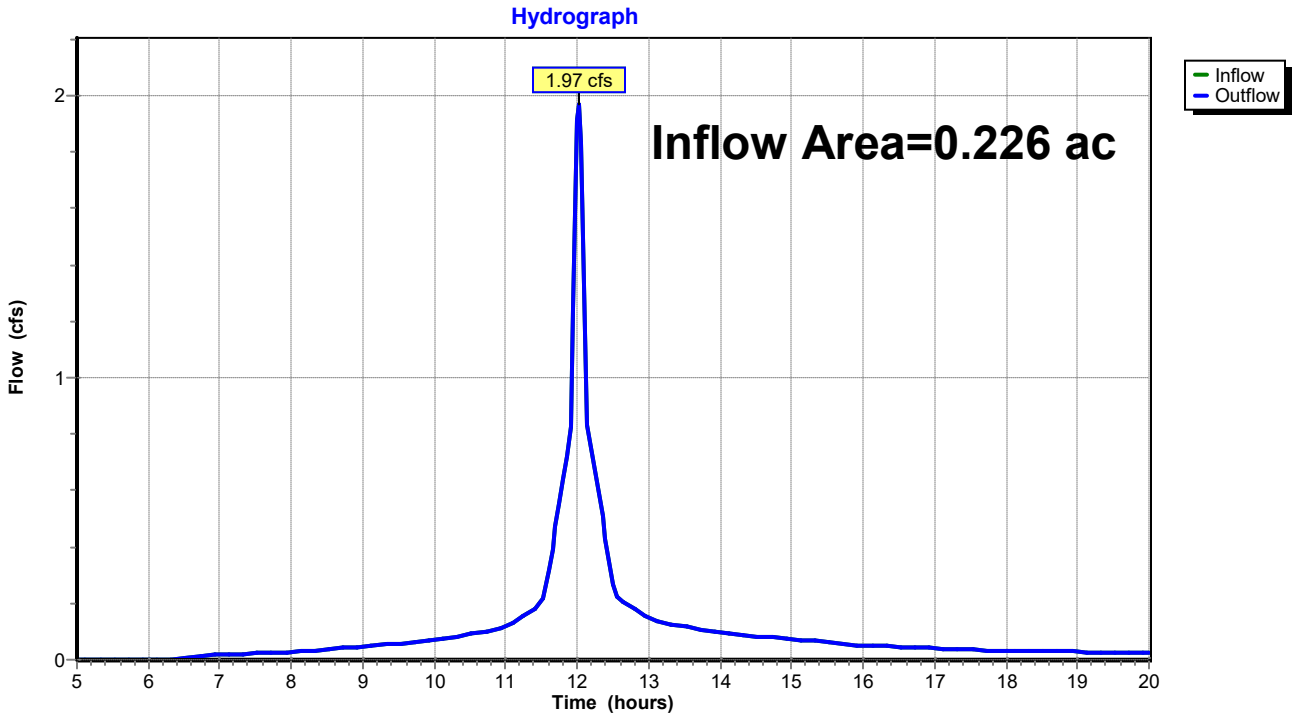

Summary for Reach 2R: Reach 2

Inflow Area = 0.307 ac, 33.49% Impervious, Inflow Depth > 6.25" for 100-yr event
Inflow = 2.27 cfs @ 12.10 hrs, Volume= 0.160 af
Outflow = 2.27 cfs @ 12.10 hrs, Volume= 0.160 af, Atten= 0%, Lag= 0.0 min
Routed to Link DP2 : DP2

Routing by Stor-Ind method, Time Span= 5.00-20.00 hrs, dt= 0.05 hrs

Reach 2R: Reach 2

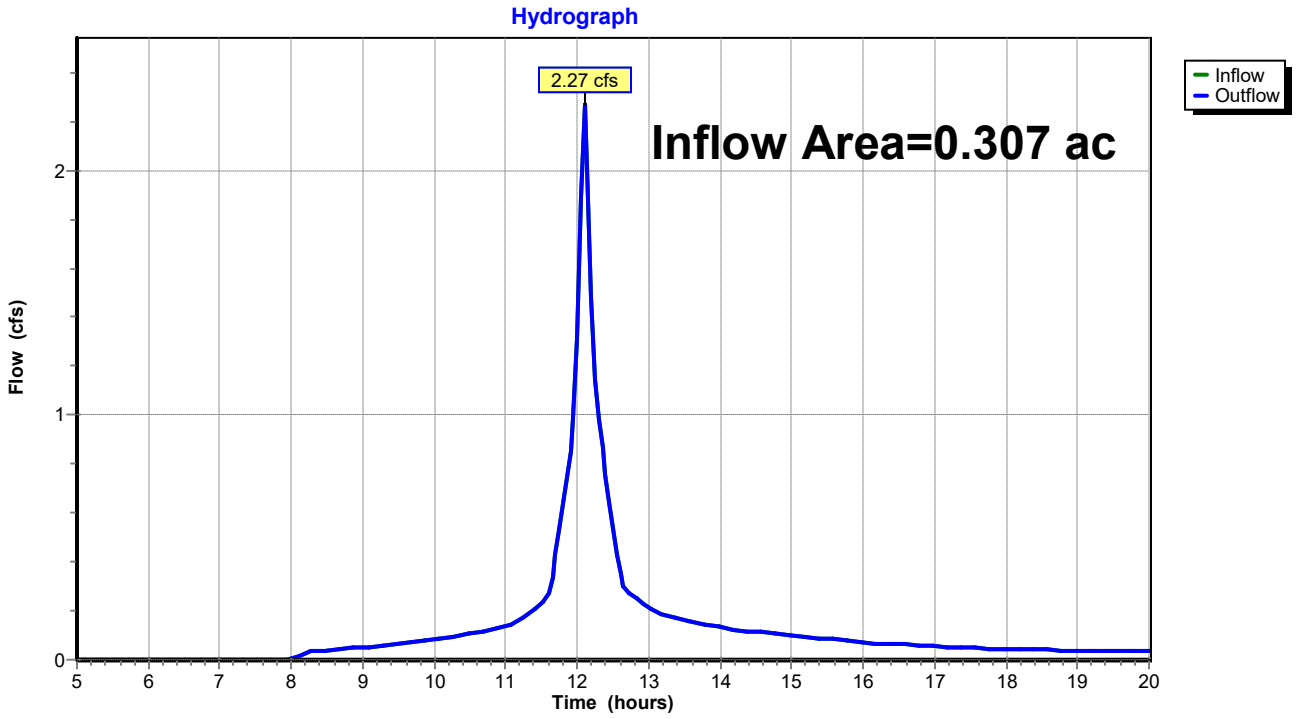

Summary for Reach DP3: Shoreline 3

Inflow Area = 1.359 ac, 4.06% Impervious, Inflow Depth > 5.92" for 100-yr event
Inflow = 9.35 cfs @ 12.10 hrs, Volume= 0.670 af
Outflow = 9.35 cfs @ 12.10 hrs, Volume= 0.670 af, Atten= 0%, Lag= 0.0 min
Routed to Reach SP1 : SACO RIVER / OCEAN

Routing by Stor-Ind method, Time Span= 5.00-20.00 hrs, dt= 0.05 hrs

Reach DP3: Shoreline 3

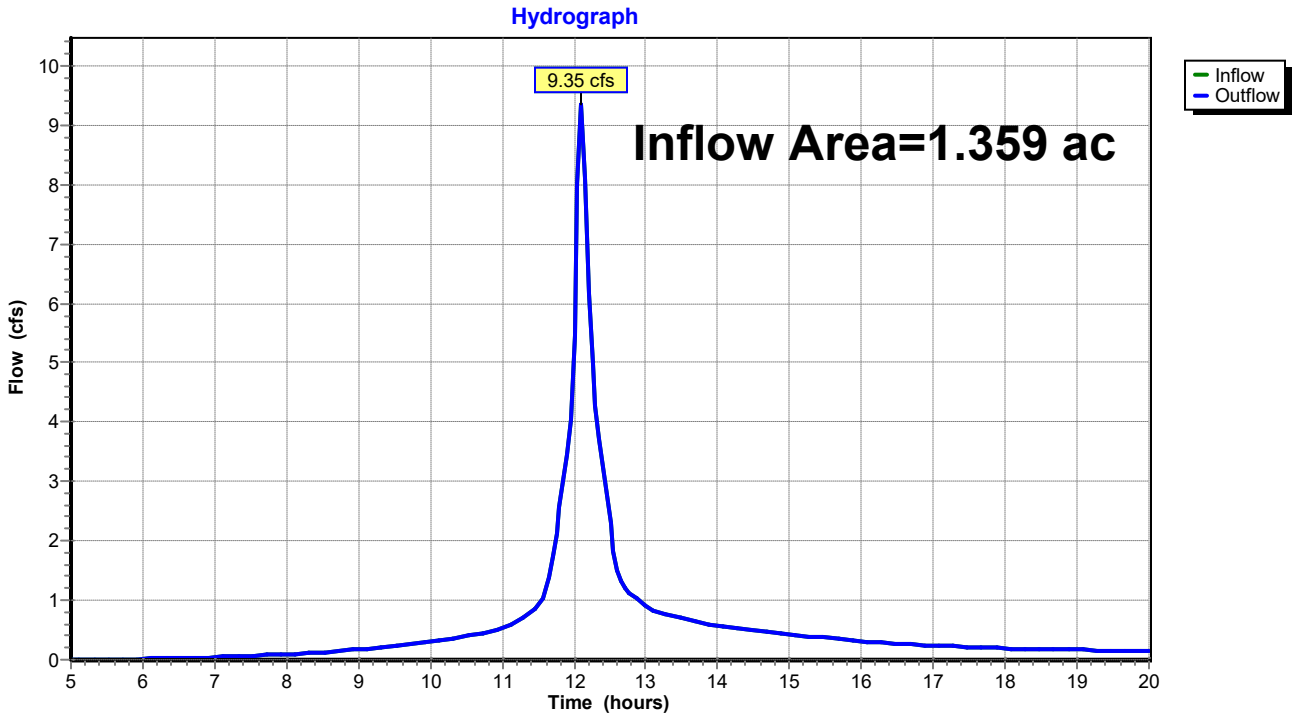

Summary for Reach SP1: SACO RIVER / OCEAN

Inflow Area = 2.557 ac, 11.96% Impervious, Inflow Depth > 6.00" for 100-yr event
Inflow = 17.21 cfs @ 12.09 hrs, Volume= 1.278 af
Outflow = 17.21 cfs @ 12.09 hrs, Volume= 1.278 af, Atten= 0%, Lag= 0.0 min

Routing by Stor-Ind method, Time Span= 5.00-20.00 hrs, dt= 0.05 hrs

Reach SP1: SACO RIVER / OCEAN

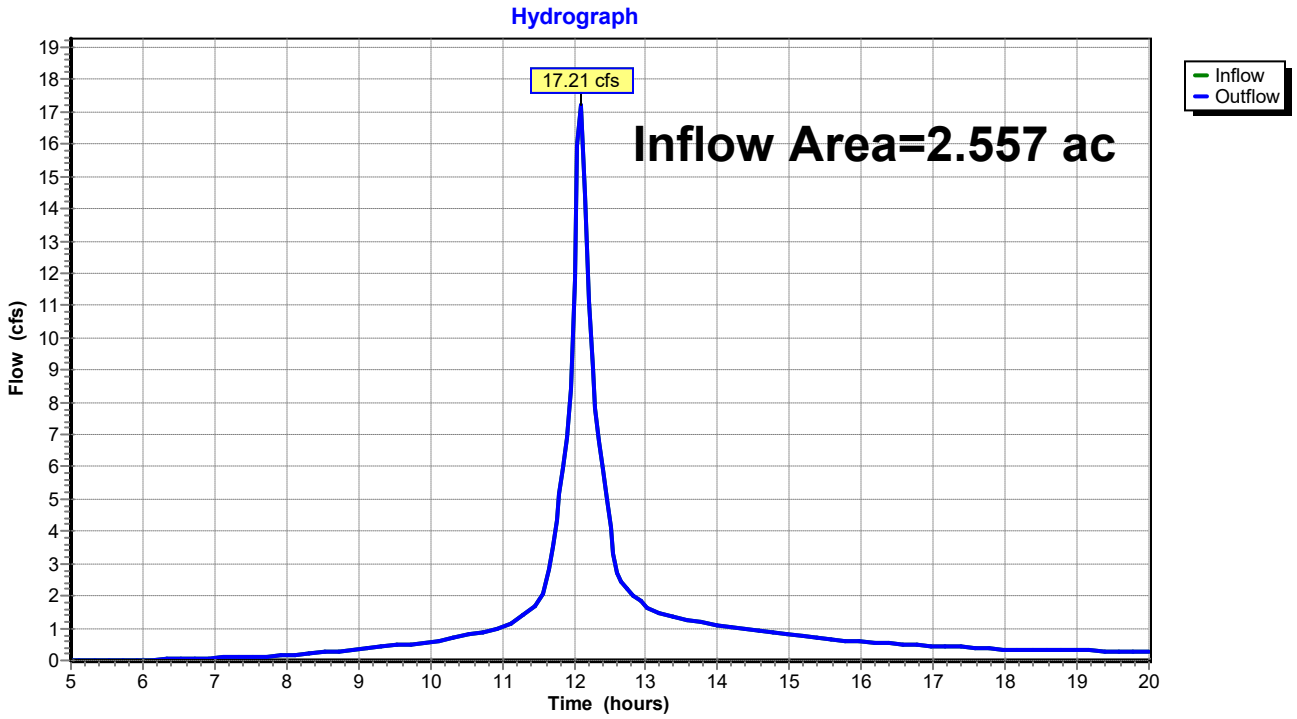

Summary for Pond 1P: Bioretention Filter Cell 1

Inflow Area = 0.226 ac, 50.01% Impervious, Inflow Depth > 6.75" for 100-yr event
Inflow = 2.01 cfs @ 12.01 hrs, Volume= 0.127 af
Outflow = 1.97 cfs @ 12.02 hrs, Volume= 0.126 af, Atten= 2%, Lag= 0.6 min
Primary = 1.97 cfs @ 12.02 hrs, Volume= 0.126 af
Routed to Pond 2P : CB-1

Routing by Stor-Ind method, Time Span= 5.00-20.00 hrs, dt= 0.05 hrs
Peak Elev= 18.25' @ 12.02 hrs Surf.Area= 294 sf Storage= 118 cf

Plug-Flow detention time= 9.1 min calculated for 0.125 af (99% of inflow)
Center-of-Mass det. time= 4.7 min (754.9 - 750.3)

Volume	Invert	Avail.Storage	Storage Description
#1	17.50'	200 cf	**Custom Stage Data (Prismatic)** Listed below (Recalc)

Elevation (feet)	Surf.Area (sq-ft)	Inc.Store (cubic-feet)	Cum.Store (cubic-feet)
17.50	0	0	0
18.00	213	53	53
18.50	372	146	200

Device	Routing	Invert	Outlet Devices
#1	Primary	18.00'	**18.0" Horiz. Orifice/Grate** C= 0.600 in 24.0" Grate (56% open area) Limited to weir flow at low heads

Primary OutFlow Max=1.88 cfs @ 12.02 hrs HW=18.25' (Free Discharge)
↑—**1=Orifice/Grate** (Weir Controls 1.88 cfs @ 1.62 fps)

Pond 1P: Bioretention Filter Cell 1

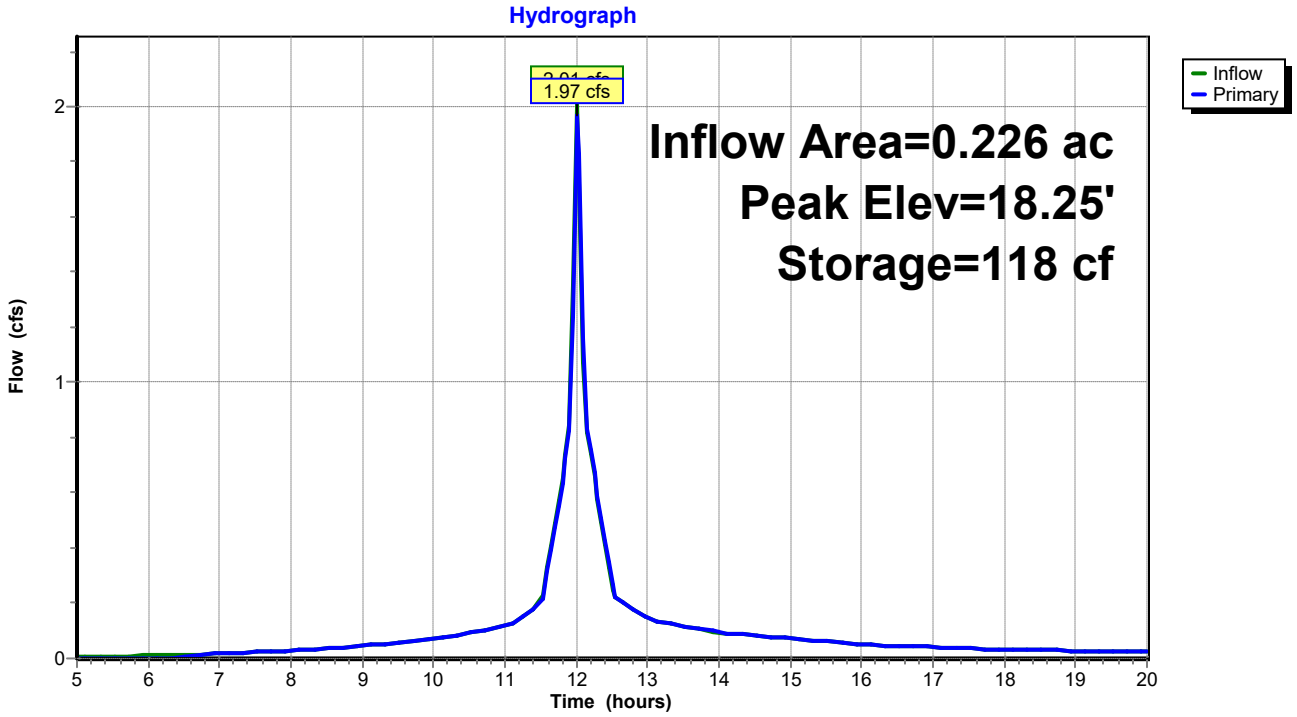

Summary for Pond 2P: CB-1

Inflow Area = 0.226 ac, 50.01% Impervious, Inflow Depth > 6.68" for 100-yr event
Inflow = 1.97 cfs @ 12.02 hrs, Volume= 0.126 af
Outflow = 1.97 cfs @ 12.02 hrs, Volume= 0.126 af, Atten= 0%, Lag= 0.0 min
Primary = 1.97 cfs @ 12.02 hrs, Volume= 0.126 af
Routed to Reach 1R : Reach 1

Routing by Stor-Ind method, Time Span= 5.00-20.00 hrs, dt= 0.05 hrs
Peak Elev= 14.54' @ 12.02 hrs

Device	Routing	Invert	Outlet Devices
#1	Primary	13.75'	**15.0" Round Culvert** L= 48.0' CPP, projecting, no headwall, Ke= 0.900 Inlet / Outlet Invert= 13.75' / 12.00' S= 0.0365 '/' Cc= 0.900 n= 0.013 Corrugated PE, smooth interior, Flow Area= 1.23 sf

Primary OutFlow Max=1.88 cfs @ 12.02 hrs HW=14.52' (Free Discharge)
1=Culvert (Inlet Controls 1.88 cfs @ 2.36 fps)

Pond 2P: CB-1

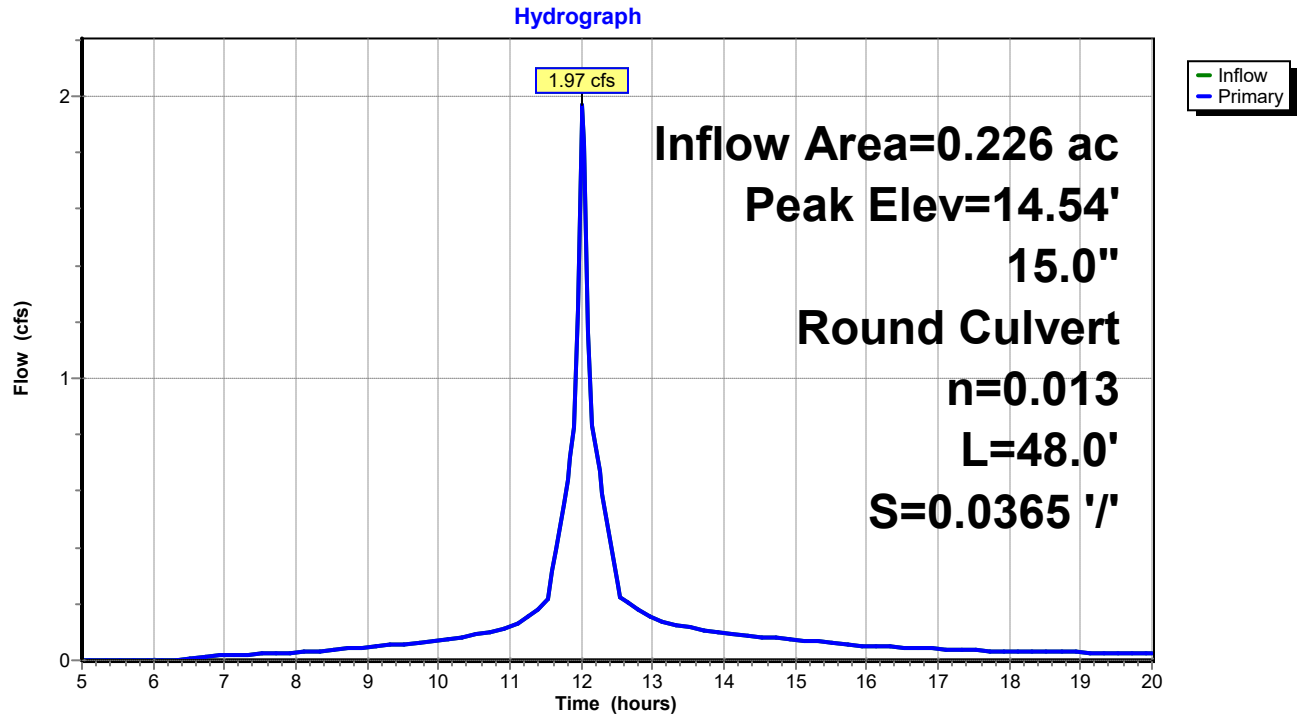

Summary for Pond 3P: Bioretention Filter Cell 2

Inflow Area = 0.307 ac, 33.49% Impervious, Inflow Depth > 6.40" for 100-yr event
Inflow = 2.37 cfs @ 12.07 hrs, Volume= 0.164 af
Outflow = 2.35 cfs @ 12.08 hrs, Volume= 0.163 af, Atten= 1%, Lag= 0.6 min
Primary = 2.35 cfs @ 12.08 hrs, Volume= 0.163 af
Routed to Pond 4P : CB-2

Routing by Stor-Ind method, Time Span= 5.00-20.00 hrs, dt= 0.05 hrs
Peak Elev= 23.79' @ 12.08 hrs Surf.Area= 263 sf Storage= 103 cf

Plug-Flow detention time= 5.8 min calculated for 0.163 af (99% of inflow)
Center-of-Mass det. time= 3.0 min (762.5 - 759.5)

Volume	Invert	Avail.Storage	Storage Description
#1	23.00'	380 cf	**Custom Stage Data (Prismatic)** Listed below (Recalc)

Elevation (feet)	Surf.Area (sq-ft)	Inc.Store (cubic-feet)	Cum.Store (cubic-feet)
23.00	0	0	0
24.00	335	168	168
24.50	515	213	380

Device	Routing	Invert	Outlet Devices
#1	Primary	23.50'	**18.0" Horiz. Orifice/Grate** C= 0.600 in 24.0" Grate (56% open area) Limited to weir flow at low heads

Primary OutFlow Max=2.28 cfs @ 12.08 hrs HW=23.78' (Free Discharge)
↑**1=Orifice/Grate** (Weir Controls 2.28 cfs @ 1.73 fps)

Pond 3P: Bioretention Filter Cell 2

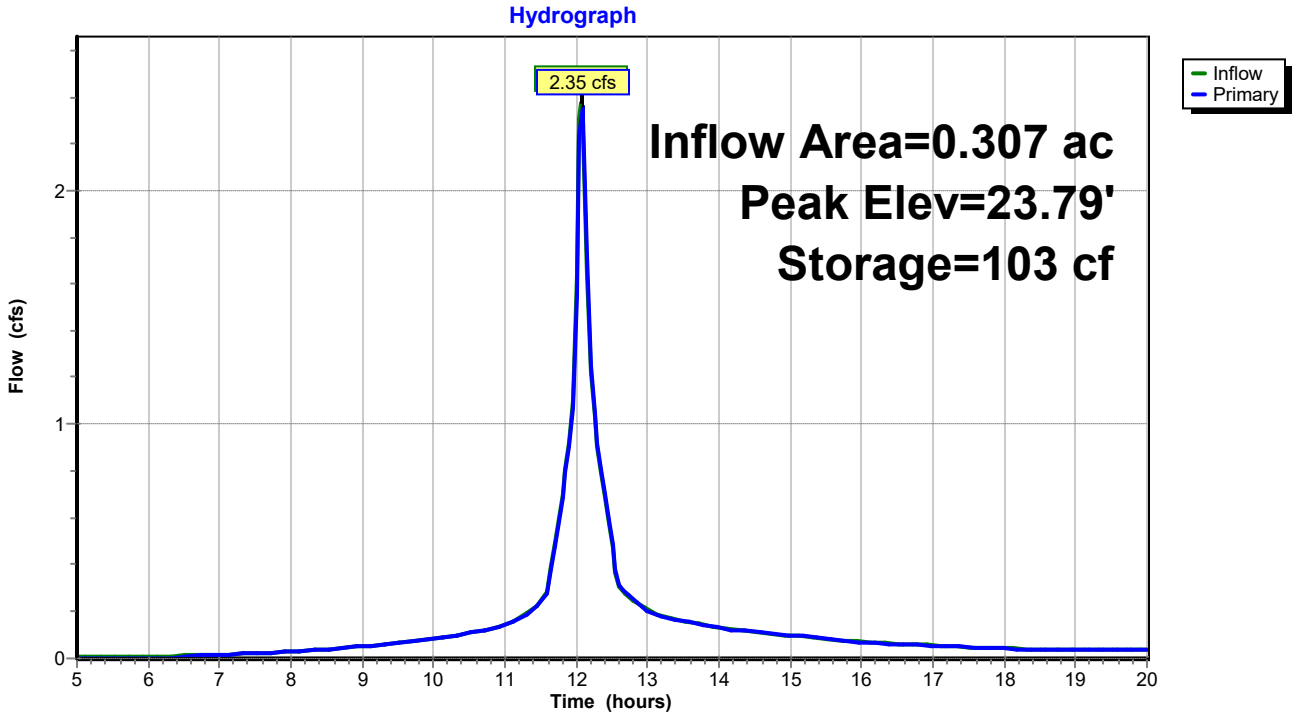

Summary for Pond 4P: CB-2

Inflow Area = 0.307 ac, 33.49% Impervious, Inflow Depth > 6.36" for 100-yr event
Inflow = 2.35 cfs @ 12.08 hrs, Volume= 0.163 af
Outflow = 2.35 cfs @ 12.08 hrs, Volume= 0.163 af, Atten= 0%, Lag= 0.0 min
Primary = 2.35 cfs @ 12.08 hrs, Volume= 0.163 af
Routed to Pond 5P : Level Lip Speader

Routing by Stor-Ind method, Time Span= 5.00-20.00 hrs, dt= 0.05 hrs
Peak Elev= 19.56' @ 12.08 hrs

Device	Routing	Invert	Outlet Devices
#1	Primary	18.75'	**18.0" Round Culvert** L= 40.0' CPP, projecting, no headwall, Ke= 0.900 Inlet / Outlet Invert= 18.75' / 18.00' S= 0.0187 '/' Cc= 0.900 n= 0.013 Corrugated PE, smooth interior, Flow Area= 1.77 sf

Primary OutFlow Max=2.28 cfs @ 12.08 hrs HW=19.54' (Free Discharge)
1=Culvert (Inlet Controls 2.28 cfs @ 2.40 fps)

Pond 4P: CB-2

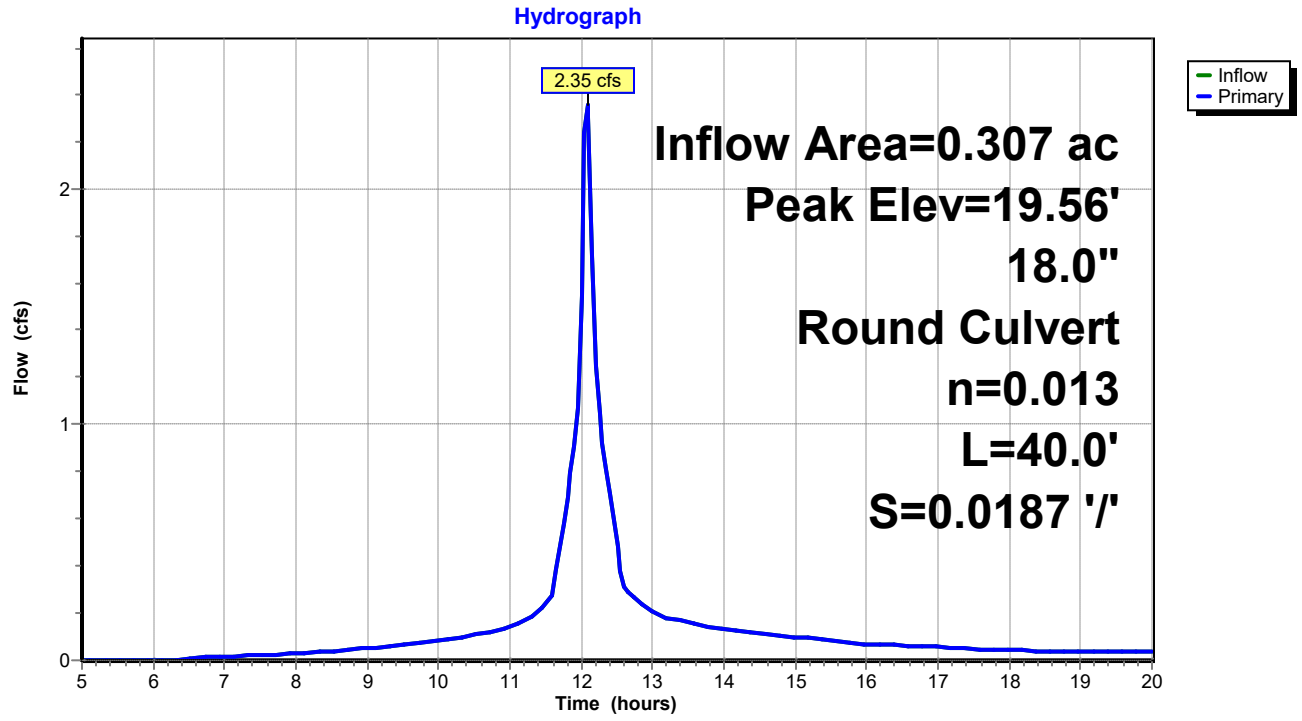

Summary for Pond 5P: Level Lip Speader

Inflow Area = 0.307 ac, 33.49% Impervious, Inflow Depth > 6.36" for 100-yr event
Inflow = 2.35 cfs @ 12.08 hrs, Volume= 0.163 af
Outflow = 2.27 cfs @ 12.10 hrs, Volume= 0.160 af, Atten= 4%, Lag= 1.5 min
Primary = 2.27 cfs @ 12.10 hrs, Volume= 0.160 af
Routed to Reach 2R : Reach 2

Routing by Stor-Ind method, Time Span= 5.00-20.00 hrs, dt= 0.05 hrs
Peak Elev= 18.00' @ 8.10 hrs Surf.Area= 168 sf Storage= 115 cf
Flood Elev= 20.00' Surf.Area= 168 sf Storage= 115 cf

Plug-Flow detention time= 13.3 min calculated for 0.160 af (98% of inflow)
Center-of-Mass det. time= 6.5 min (769.1 - 762.5)

Volume	Invert	Avail.Storage	Storage Description
#1	17.00'	115 cf	**Custom Stage Data (Prismatic)** Listed below (Recalc)

Elevation (feet)	Surf.Area (sq-ft)	Voids (%)	Inc.Store (cubic-feet)	Cum.Store (cubic-feet)
17.00	61	0.0	0	0
18.00	168	100.0	115	115

Device	Routing	Invert	Outlet Devices
#0	Primary	18.00'	**Automatic Storage Overflow** (Discharged without head)

Primary OutFlow Max=0.00 cfs @ 12.10 hrs HW=18.00' (Free Discharge)

Pond 5P: Level Lip Speader

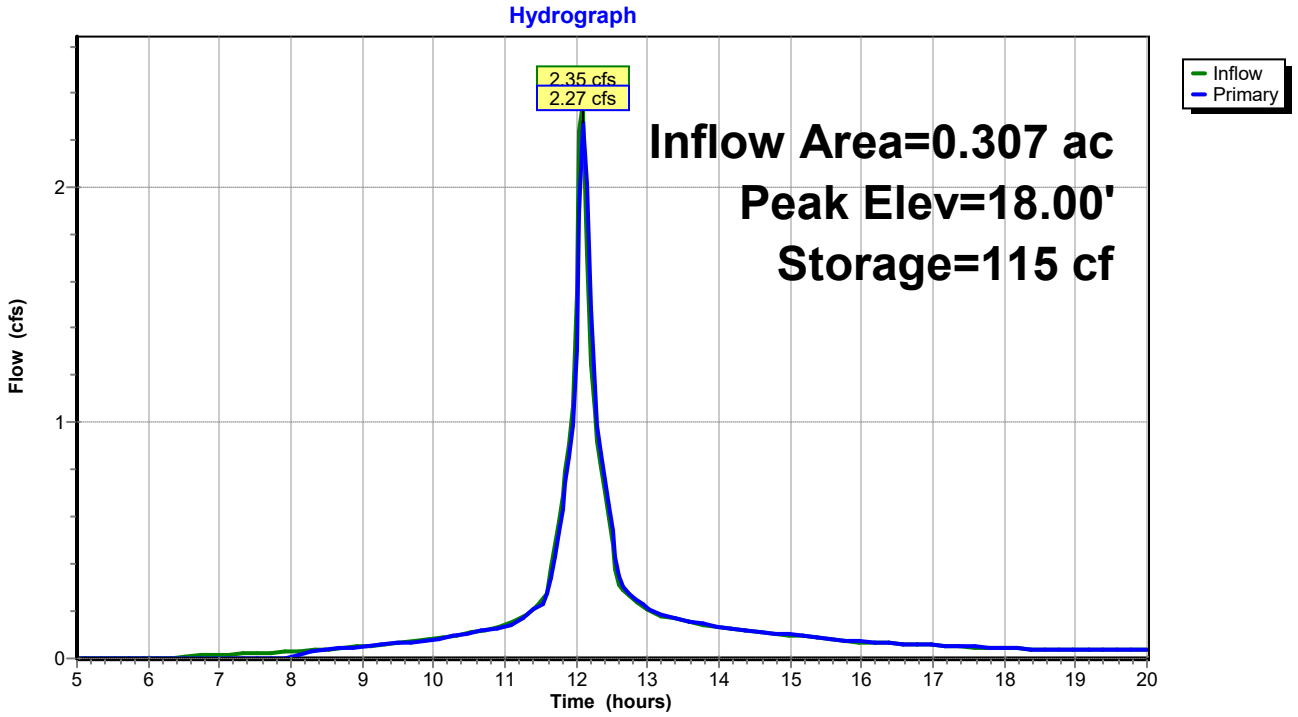

Summary for Link DP1: DP1

Inflow Area = 0.489 ac, 28.87% Impervious, Inflow Depth > 6.21" for 100-yr event
Inflow = 3.88 cfs @ 12.04 hrs, Volume= 0.253 af
Primary = 3.88 cfs @ 12.04 hrs, Volume= 0.253 af, Atten= 0%, Lag= 0.0 min
Routed to Reach SP1 : SACO RIVER / OCEAN

Primary outflow = Inflow, Time Span= 5.00-20.00 hrs, dt= 0.05 hrs

Link DP1: DP1

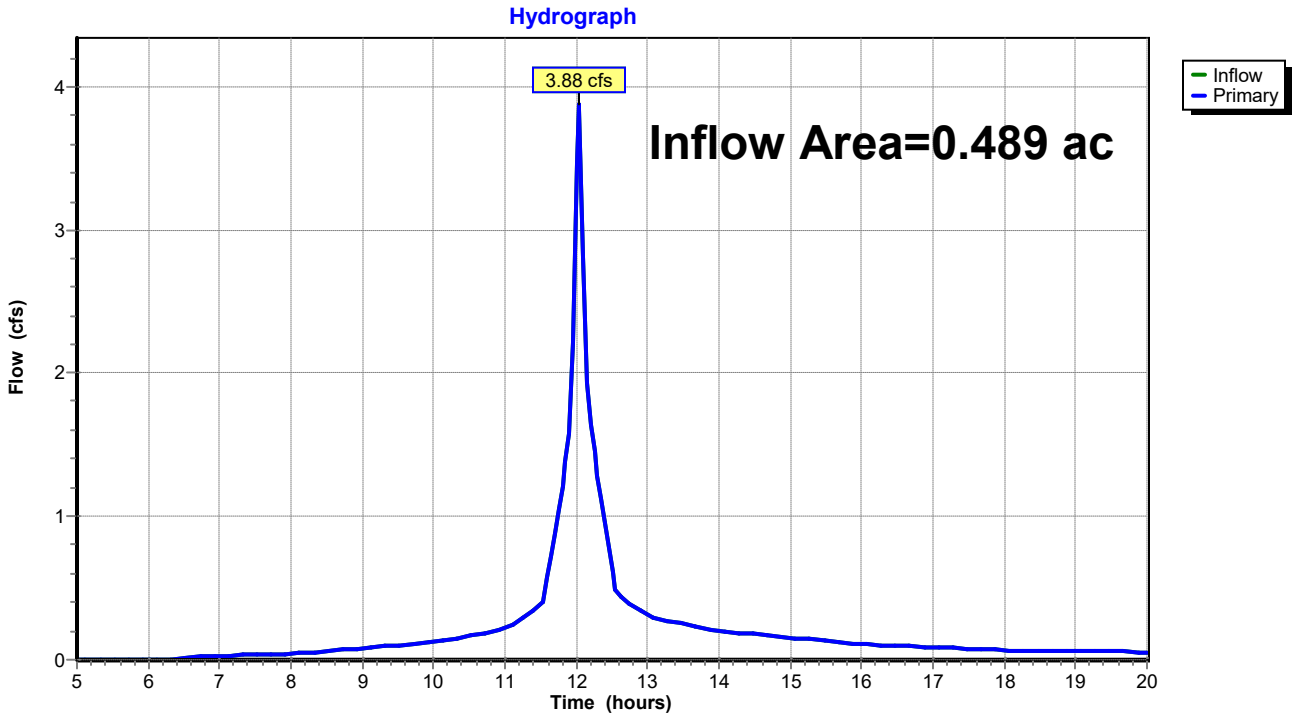

Summary for Link DP2: DP2

Inflow Area = 0.709 ac, 15.44% Impervious, Inflow Depth > 6.00" for 100-yr event
Inflow = 4.98 cfs @ 12.10 hrs, Volume= 0.354 af
Primary = 4.98 cfs @ 12.10 hrs, Volume= 0.354 af, Atten= 0%, Lag= 0.0 min
Routed to Reach SP1 : SACO RIVER / OCEAN

Primary outflow = Inflow, Time Span= 5.00-20.00 hrs, dt= 0.05 hrs

Link DP2: DP2

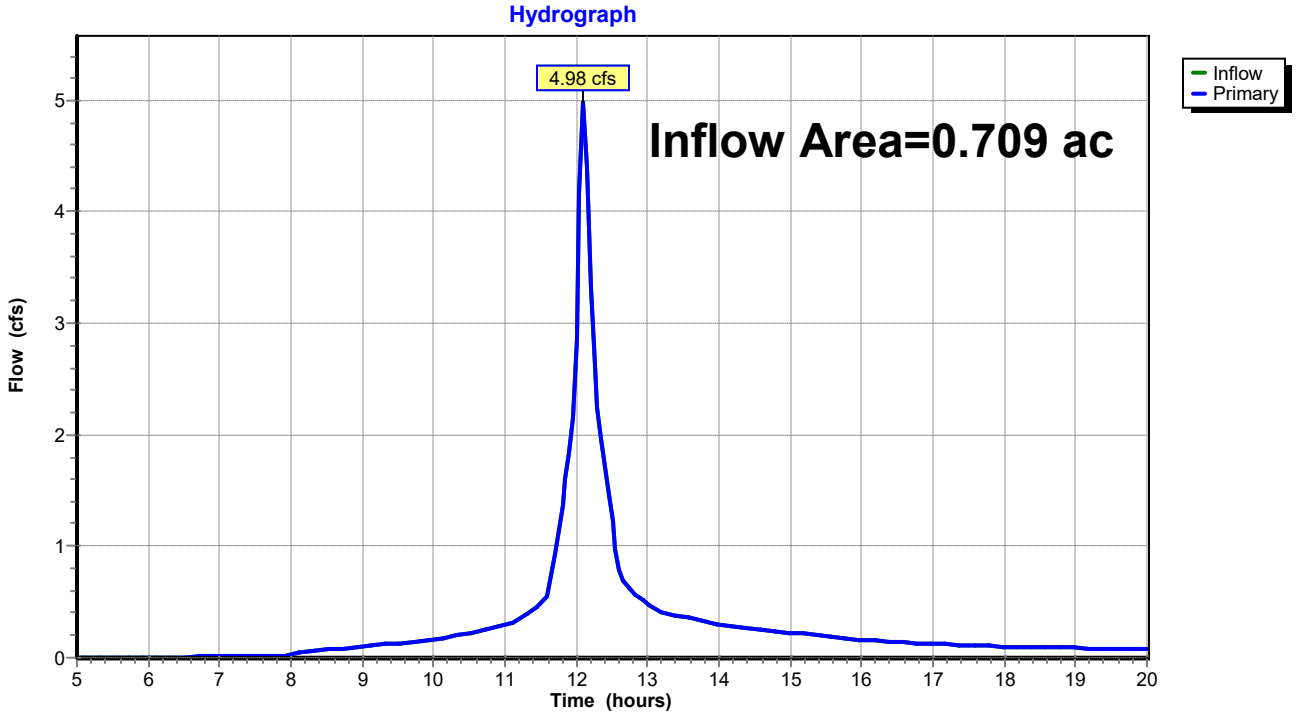

Time span=5.00-20.00 hrs, dt=0.05 hrs, 301 points
Runoff by SCS TR-20 method, UH=SCS, Weighted-CN
Reach routing by Stor-Ind method - Pond routing by Stor-Ind method

Subcatchment 1S: Post Subcatchment 1 Runoff Area=9,832 sf 50.01% Impervious Runoff Depth>0.20"
Flow Length=172' Tc=0.8 min CN=87 Runoff=0.06 cfs 0.004 af

Subcatchment 2S: Post Subcatchment 2 Runoff Area=11,488 sf 10.78% Impervious Runoff Depth>0.06"
Flow Length=133' Tc=3.4 min CN=79 Runoff=0.01 cfs 0.001 af

Subcatchment 3S: Post Subcatchment 3 Runoff Area=13,365 sf 33.49% Impervious Runoff Depth>0.13"
Flow Length=262' Tc=4.9 min CN=84 Runoff=0.04 cfs 0.003 af

Subcatchment 4S: Post Subcatchment 4 Runoff Area=17,529 sf 1.68% Impervious Runoff Depth>0.06"
Flow Length=126' Tc=7.2 min CN=79 Runoff=0.01 cfs 0.002 af

Subcatchment 5S: Post Subcatchment 5 Runoff Area=59,179 sf 4.06% Impervious Runoff Depth>0.07"
Flow Length=445' Tc=7.0 min CN=80 Runoff=0.05 cfs 0.008 af

Reach 1R: Reach 1 Inflow=0.02 cfs 0.003 af
Outflow=0.02 cfs 0.003 af

Reach 2R: Reach 2 Inflow=0.00 cfs 0.000 af
Outflow=0.00 cfs 0.000 af

Reach DP3: Shoreline 3 Inflow=0.05 cfs 0.008 af
Outflow=0.05 cfs 0.008 af

Reach SP1: SACO RIVER / OCEAN Inflow=0.09 cfs 0.014 af
Outflow=0.09 cfs 0.014 af

Pond 1P: Bioretention Filter Cell 1 Peak Elev=18.01' Storage=56 cf Inflow=0.06 cfs 0.004 af
Outflow=0.02 cfs 0.003 af

Pond 2P: CB-1 Peak Elev=13.83' Inflow=0.02 cfs 0.003 af
15.0" Round Culvert n=0.013 L=48.0' S=0.0365 '/' Outflow=0.02 cfs 0.003 af

Pond 3P: Bioretention Filter Cell 2 Peak Elev=23.51' Storage=44 cf Inflow=0.04 cfs 0.003 af
Outflow=0.02 cfs 0.002 af

Pond 4P: CB-2 Peak Elev=18.81' Inflow=0.02 cfs 0.002 af
18.0" Round Culvert n=0.013 L=40.0' S=0.0187 '/' Outflow=0.02 cfs 0.002 af

Pond 5P: Level Lip Speader Peak Elev=17.95' Storage=106 cf Inflow=0.02 cfs 0.002 af
Outflow=0.00 cfs 0.000 af

Link DP1: DP1 Inflow=0.03 cfs 0.004 af
Primary=0.03 cfs 0.004 af

Link DP2: DP2 Inflow=0.01 cfs 0.002 af
Primary=0.01 cfs 0.002 af

Total Runoff Area = 2.557 ac Runoff Volume = 0.018 af Average Runoff Depth = 0.09"
88.04% Pervious = 2.251 ac 11.96% Impervious = 0.306 ac

Summary for Subcatchment 1S: Post Subcatchment 1

Runoff = 0.06 cfs @ 12.03 hrs, Volume= 0.004 af, Depth> 0.20"
Routed to Pond 1P : Bioretention Filter Cell 1

Runoff by SCS TR-20 method, UH=SCS, Weighted-CN, Time Span= 5.00-20.00 hrs, dt= 0.05 hrs
Type III 24-hr WQ Rainfall=1.00"

	Area (sf)	CN	Description
	3,430	77	Woods, Good, HSG D
*	982	98	Ledge, HSG D
	595	80	>75% Grass cover, Good, HSG D
*	3,935	98	Paved Access Drive, HSG D
*	890	73	Bioretention Filter Cell, Good, HSG D
	9,832	87	Weighted Average
	4,915		49.99% Pervious Area
	4,917		50.01% Impervious Area

Tc (min)	Length (feet)	Slope (ft/ft)	Velocity (ft/sec)	Capacity (cfs)	Description
0.4	46	0.0500	1.73		**Sheet Flow, Tc-1** Smooth surfaces n= 0.011 P2= 3.30"
0.3	102	0.0500	5.25	15.74	**Channel Flow, Tc-2** Area= 3.0 sf Perim= 9.2' r= 0.33' n= 0.030 Earth, grassed & winding
0.1	24	0.0625	3.75		**Shallow Concentrated Flow, Tc-3** Grassed Waterway Kv= 15.0 fps
0.8	172	Total			

Subcatchment 1S: Post Subcatchment 1

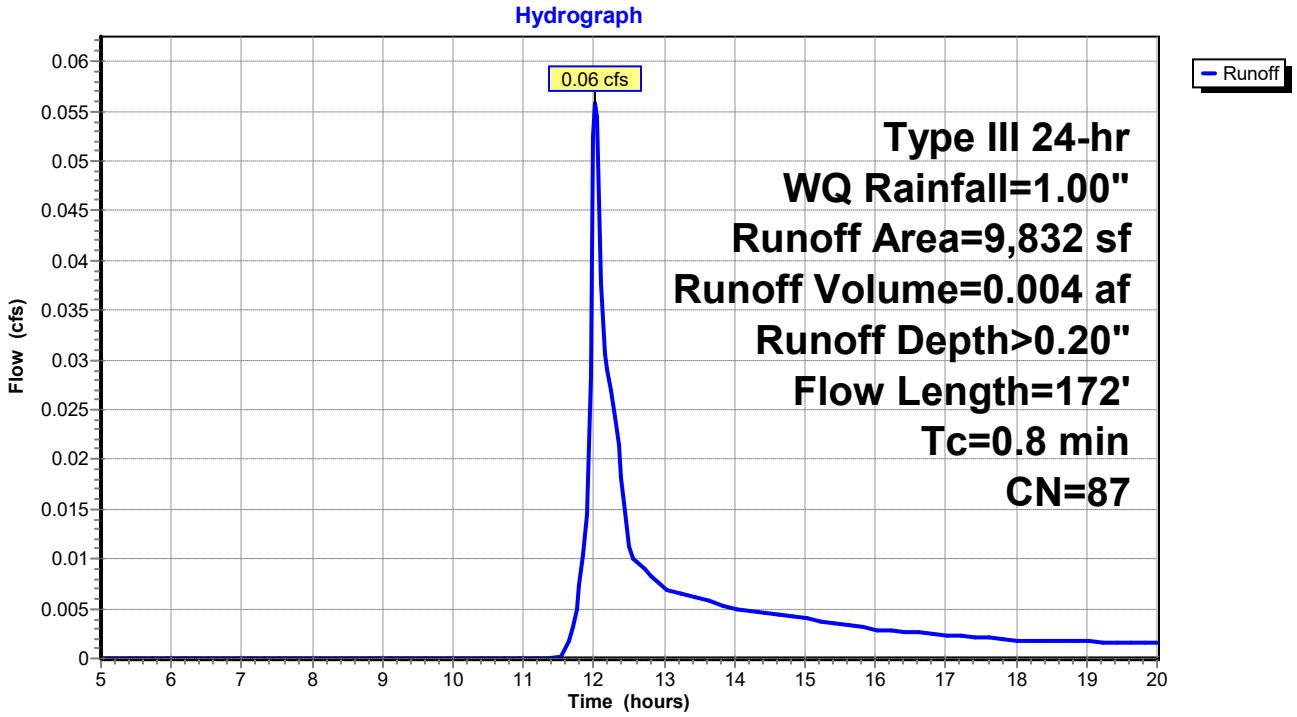

Summary for Subcatchment 2S: Post Subcatchment 2

Runoff = 0.01 cfs @ 12.31 hrs, Volume= 0.001 af, Depth> 0.06"
Routed to Link DP1 : DP1

Runoff by SCS TR-20 method, UH=SCS, Weighted-CN, Time Span= 5.00-20.00 hrs, dt= 0.05 hrs
Type III 24-hr WQ Rainfall=1.00"

Area (sf)	CN	Description
10,250	77	Woods, Good, HSG D
1,238	98	Paved parking, HSG D
11,488	79	Weighted Average
10,250		89.22% Pervious Area
1,238		10.78% Impervious Area

Tc (min)	Length (feet)	Slope (ft/ft)	Velocity (ft/sec)	Capacity (cfs)	Description
2.5	21	0.1905	0.14		**Sheet Flow, Tc-1** Woods: Light underbrush n= 0.400 P2= 3.30"
0.9	112	0.1696	2.06		**Shallow Concentrated Flow, Tc-2** Woodland Kv= 5.0 fps
3.4	133	Total			

Subcatchment 2S: Post Subcatchment 2

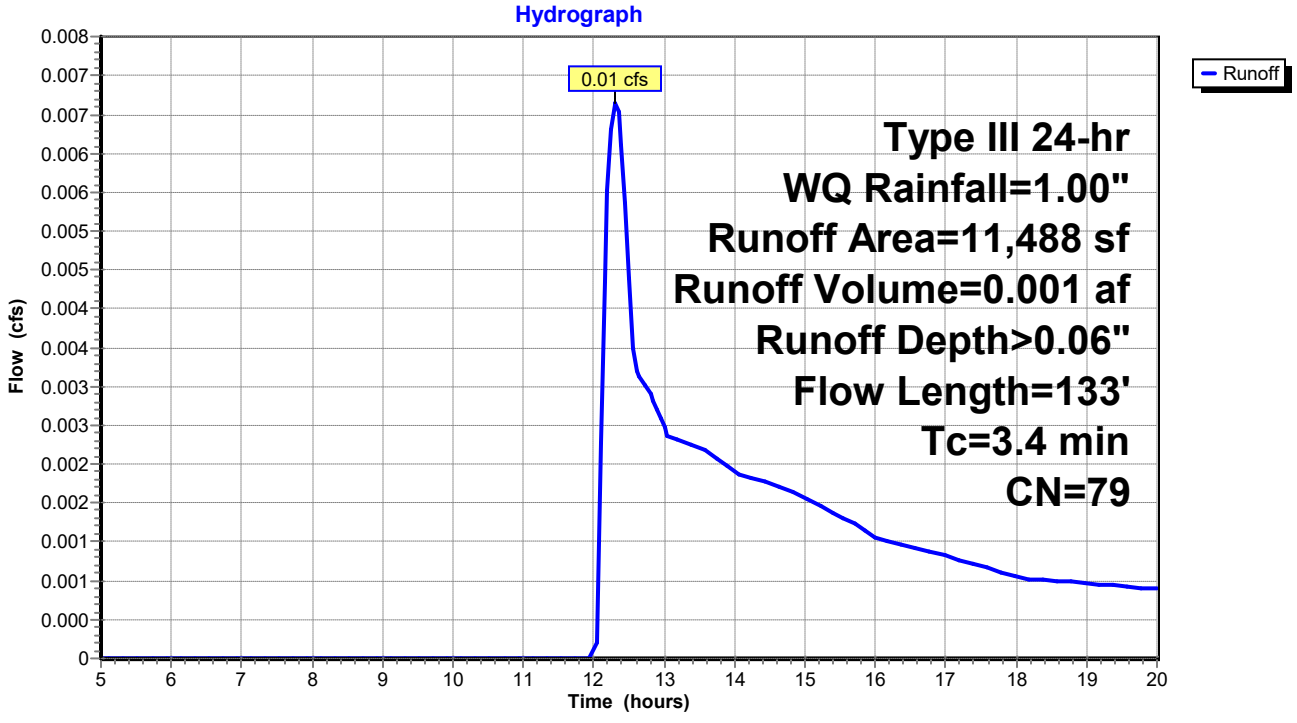

Summary for Subcatchment 3S: Post Subcatchment 3

Runoff = 0.04 cfs @ 12.11 hrs, Volume= 0.003 af, Depth> 0.13"
Routed to Pond 3P : Bioretention Filter Cell 2

Runoff by SCS TR-20 method, UH=SCS, Weighted-CN, Time Span= 5.00-20.00 hrs, dt= 0.05 hrs
Type III 24-hr WQ Rainfall=1.00"

	Area (sf)	CN	Description
	6,822	77	Woods, Good, HSG D
*	580	73	Biofiltration cell, Good, HSG D
*	3,768	98	Paved access drive, HSG D
	1,487	80	>75% Grass cover, Good, HSG D
*	708	98	Ledge, HSG D
	13,365	84	Weighted Average
	8,889		66.51% Pervious Area
	4,476		33.49% Impervious Area

Tc (min)	Length (feet)	Slope (ft/ft)	Velocity (ft/sec)	Capacity (cfs)	Description
4.2	43	0.2093	0.17		**Sheet Flow, Tc-1** Woods: Light underbrush n= 0.400 P2= 3.30"
0.7	214	0.0500	5.25	15.74	**Channel Flow, Tc-2** Area= 3.0 sf Perim= 9.2' r= 0.33' n= 0.030 Earth, grassed & winding
0.0	5	0.0500	3.35		**Shallow Concentrated Flow, Tc-3** Grassed Waterway Kv= 15.0 fps
4.9	262	Total			

Subcatchment 3S: Post Subcatchment 3

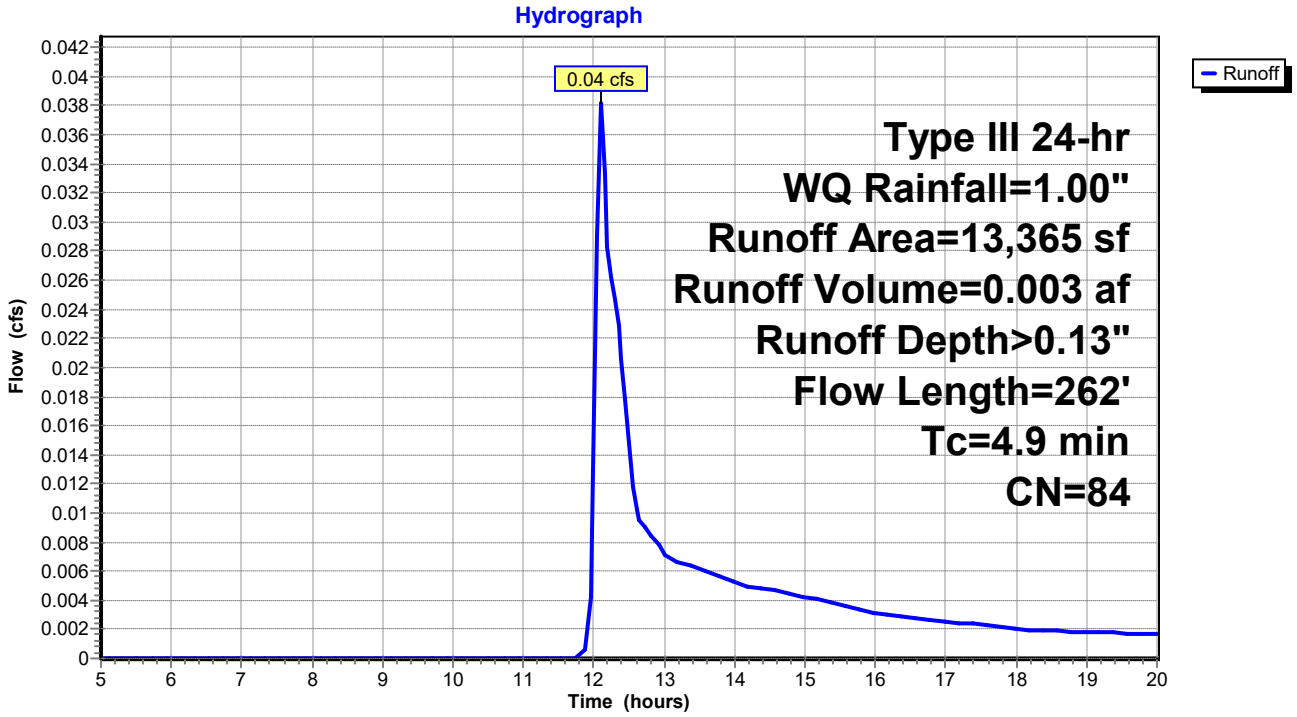

Summary for Subcatchment 4S: Post Subcatchment 4

Runoff = 0.01 cfs @ 12.38 hrs, Volume= 0.002 af, Depth> 0.06"
Routed to Link DP2 : DP2

Runoff by SCS TR-20 method, UH=SCS, Weighted-CN, Time Span= 5.00-20.00 hrs, dt= 0.05 hrs
Type III 24-hr WQ Rainfall=1.00"

	Area (sf)	CN	Description
*	295	98	Paved access drive, HSG D
	1,450	80	>75% Grass cover, Good, HSG D
	15,784	79	Woods, Fair, HSG D
	17,529	79	Weighted Average
	17,234		98.32% Pervious Area
	295		1.68% Impervious Area

Tc (min)	Length (feet)	Slope (ft/ft)	Velocity (ft/sec)	Capacity (cfs)	Description
6.8	62	0.1290	0.15		**Sheet Flow, Tc-1** Woods: Light underbrush n= 0.400 P2= 3.30"
0.4	64	0.2343	2.42		**Shallow Concentrated Flow, Tc-2** Woodland Kv= 5.0 fps
7.2	126	Total			

Subcatchment 4S: Post Subcatchment 4

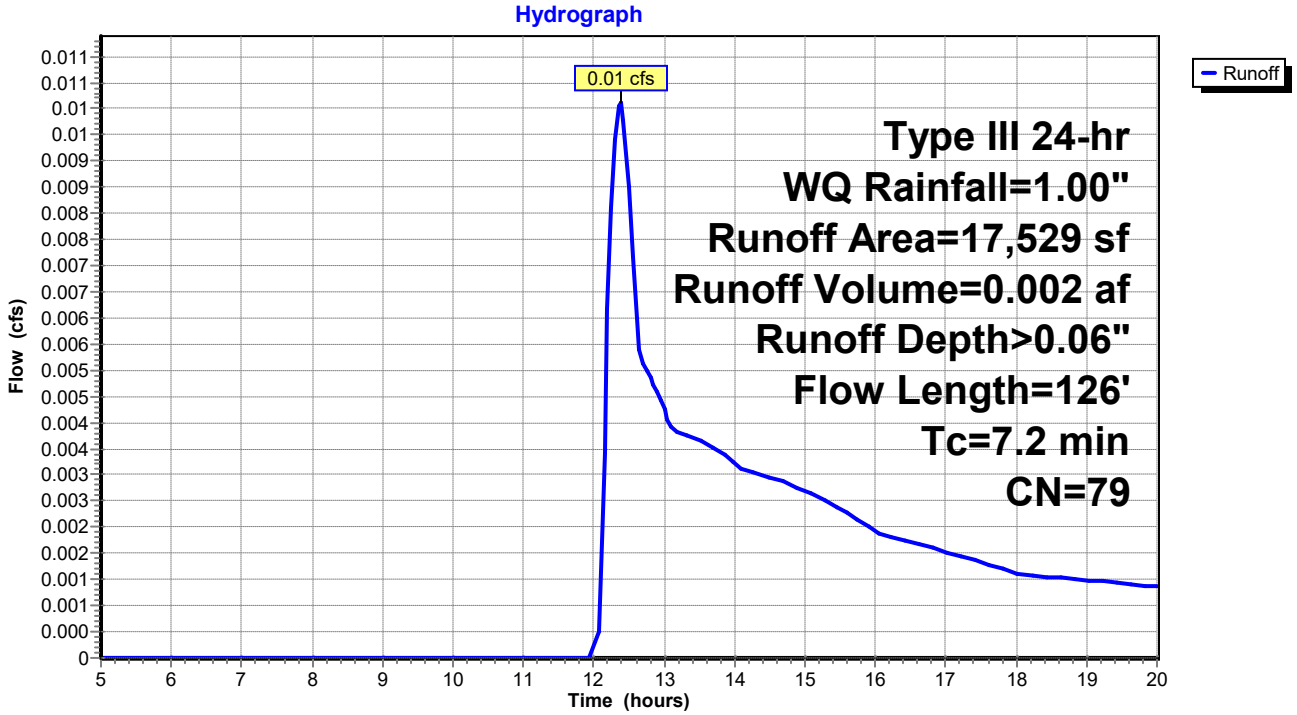

Summary for Subcatchment 5S: Post Subcatchment 5

Runoff = 0.05 cfs @ 12.34 hrs, Volume= 0.008 af, Depth> 0.07"
Routed to Reach DP3 : Shoreline 3

Runoff by SCS TR-20 method, UH=SCS, Weighted-CN, Time Span= 5.00-20.00 hrs, dt= 0.05 hrs
Type III 24-hr WQ Rainfall=1.00"

	Area (sf)	CN	Description
*	1,650	98	Paved acccess drive, HSG D
	751	98	Roofs, HSG D
*	6,955	88	Sand beach, HSG D
	3,872	96	Gravel surface, HSG D
	45,951	77	Woods, Good, HSG D
	59,179	80	Weighted Average
	56,778		95.94% Pervious Area
	2,401		4.06% Impervious Area

Tc (min)	Length (feet)	Slope (ft/ft)	Velocity (ft/sec)	Capacity (cfs)	Description
2.7	23	0.1740	0.14		**Sheet Flow, Tc-1** Woods: Light underbrush n= 0.400 P2= 3.30"
1.0	70	0.0574	1.20		**Shallow Concentrated Flow, Tc-2** Woodland Kv= 5.0 fps
0.5	170	0.1059	5.24		**Shallow Concentrated Flow, Tc-3** Unpaved Kv= 16.1 fps
2.5	140	0.0357	0.94		**Shallow Concentrated Flow, Tc-4** Woodland Kv= 5.0 fps
0.3	42	0.0714	2.67		**Shallow Concentrated Flow, Tc-5** Nearly Bare & Untilled Kv= 10.0 fps
7.0	445	Total			

Subcatchment 5S: Post Subcatchment 5

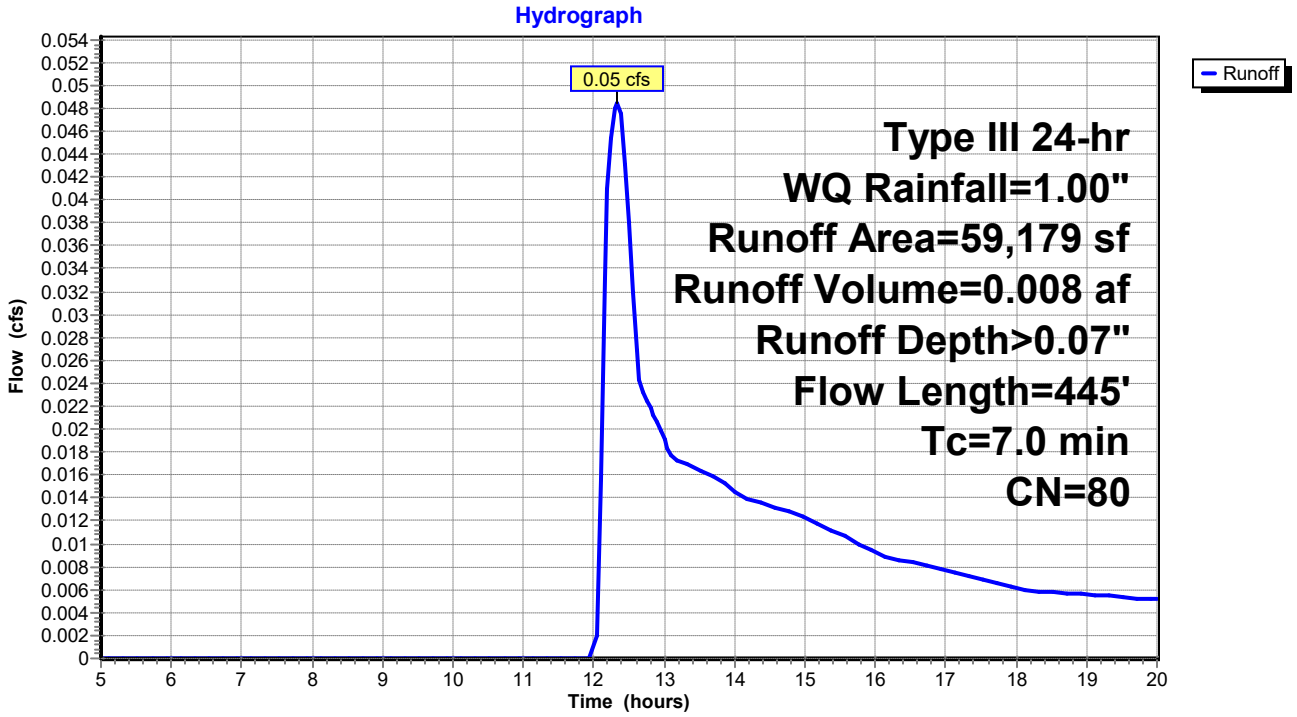

Summary for Reach 1R: Reach 1

Inflow Area = 0.226 ac, 50.01% Impervious, Inflow Depth > 0.14" for WQ event
Inflow = 0.02 cfs @ 12.36 hrs, Volume= 0.003 af
Outflow = 0.02 cfs @ 12.36 hrs, Volume= 0.003 af, Atten= 0%, Lag= 0.0 min
Routed to Link DP1 : DP1

Routing by Stor-Ind method, Time Span= 5.00-20.00 hrs, dt= 0.05 hrs

Reach 1R: Reach 1

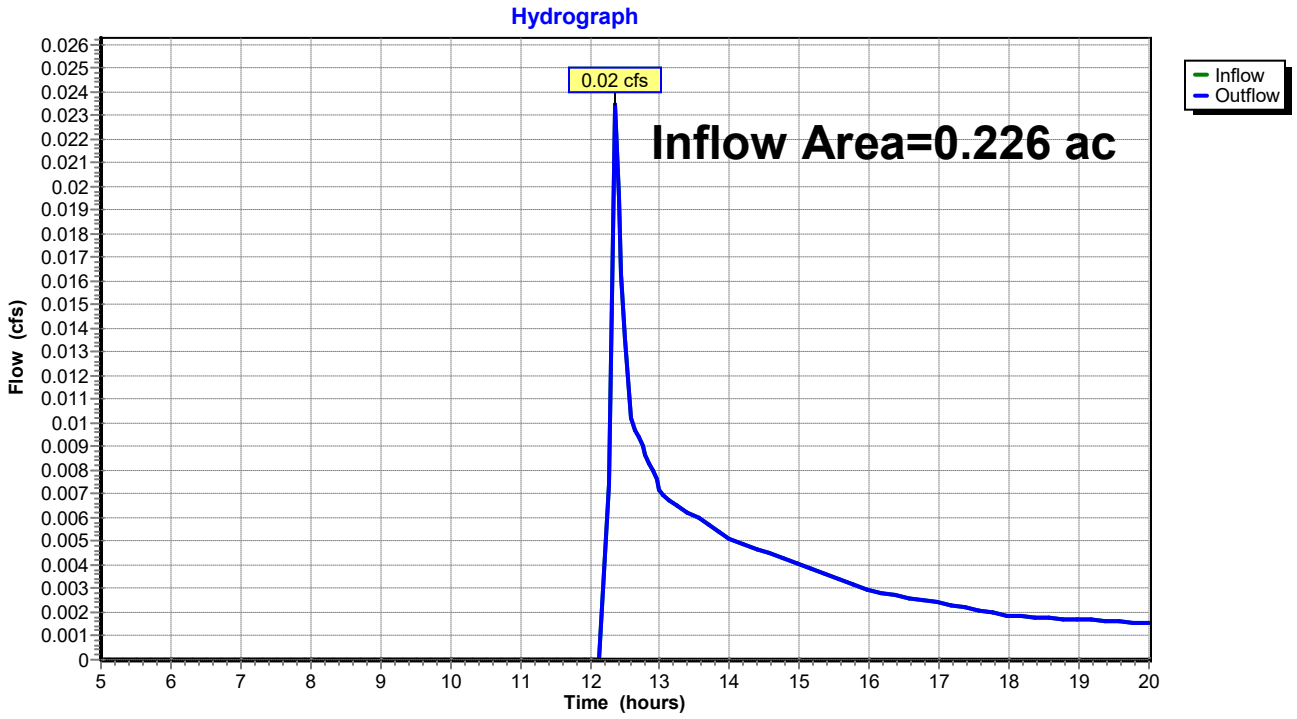

Summary for Reach 2R: Reach 2

Inflow Area = 0.307 ac, 33.49% Impervious, Inflow Depth = 0.00" for WQ event
Inflow = 0.00 cfs @ 5.00 hrs, Volume= 0.000 af
Outflow = 0.00 cfs @ 5.00 hrs, Volume= 0.000 af, Atten= 0%, Lag= 0.0 min
Routed to Link DP2 : DP2

Routing by Stor-Ind method, Time Span= 5.00-20.00 hrs, dt= 0.05 hrs

Reach 2R: Reach 2

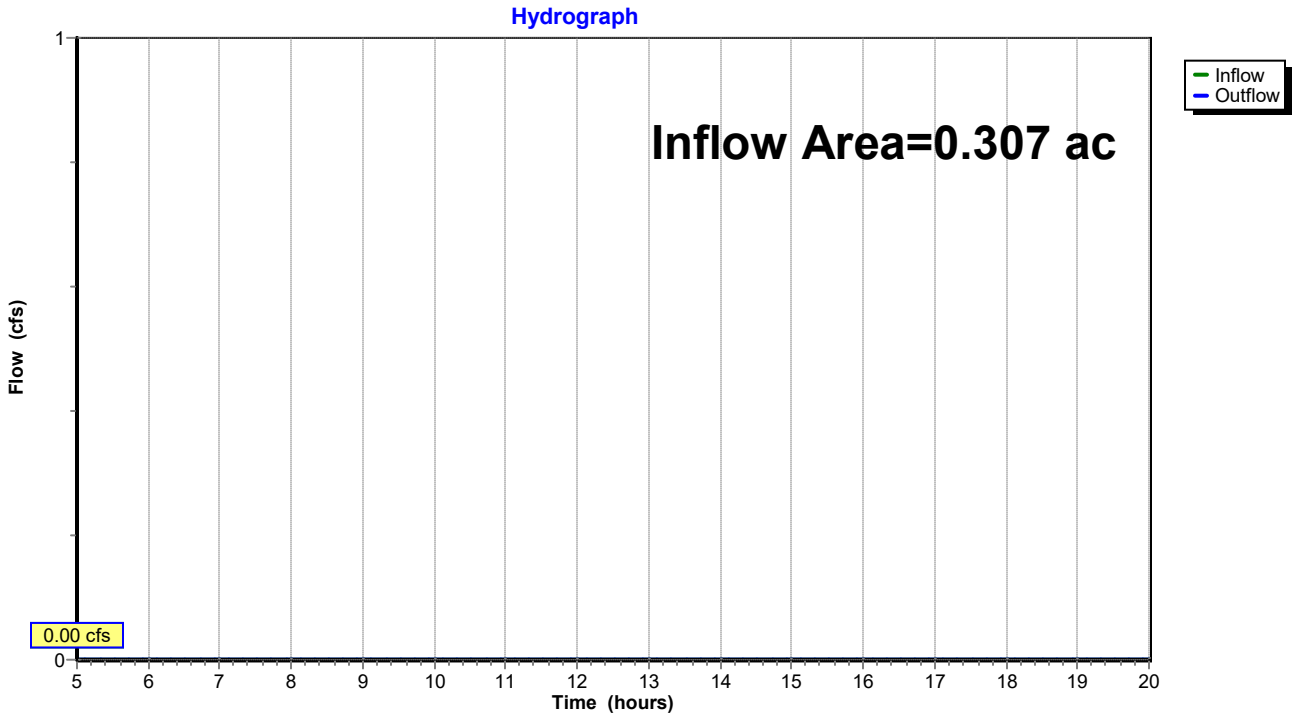

Summary for Reach DP3: Shoreline 3

Inflow Area = 1.359 ac, 4.06% Impervious, Inflow Depth > 0.07" for WQ event
Inflow = 0.05 cfs @ 12.34 hrs, Volume= 0.008 af
Outflow = 0.05 cfs @ 12.34 hrs, Volume= 0.008 af, Atten= 0%, Lag= 0.0 min
Routed to Reach SP1 : SACO RIVER / OCEAN

Routing by Stor-Ind method, Time Span= 5.00-20.00 hrs, dt= 0.05 hrs

Reach DP3: Shoreline 3

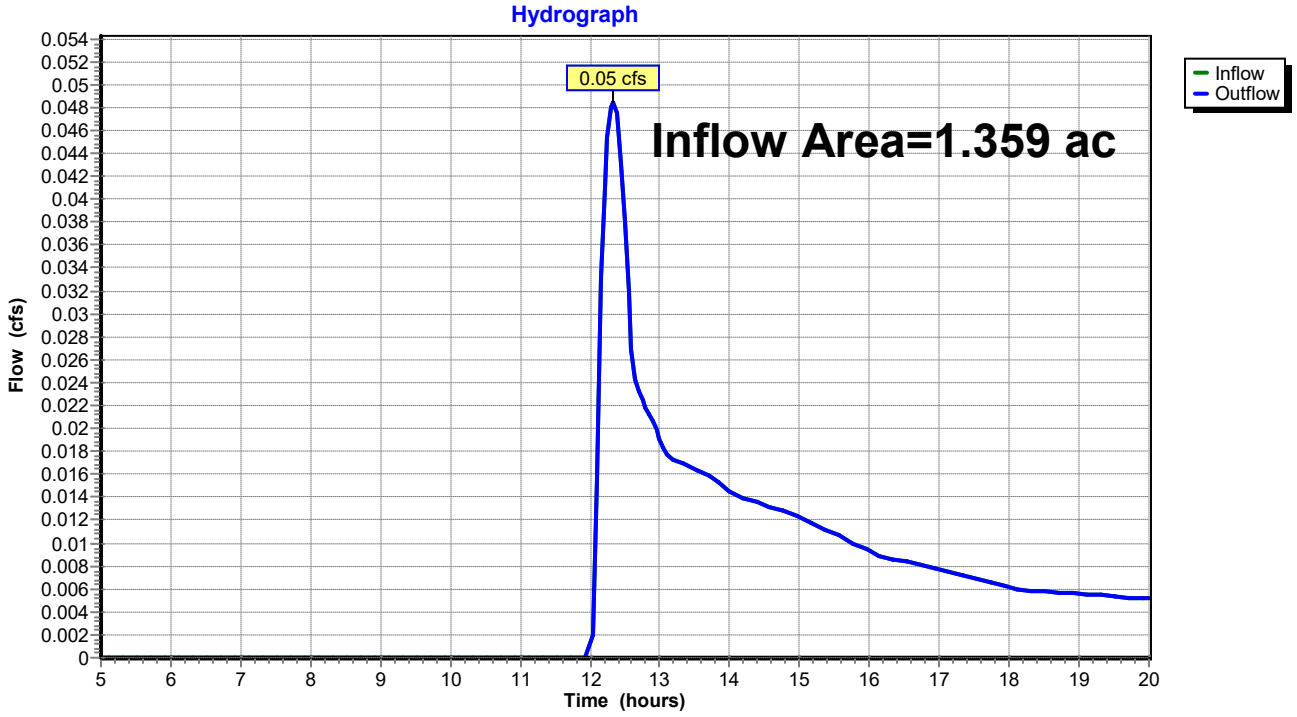

Summary for Reach SP1: SACO RIVER / OCEAN

Inflow Area = 2.557 ac, 11.96% Impervious, Inflow Depth > 0.06" for WQ event
Inflow = 0.09 cfs @ 12.36 hrs, Volume= 0.014 af
Outflow = 0.09 cfs @ 12.36 hrs, Volume= 0.014 af, Atten= 0%, Lag= 0.0 min

Routing by Stor-Ind method, Time Span= 5.00-20.00 hrs, dt= 0.05 hrs

Reach SP1: SACO RIVER / OCEAN

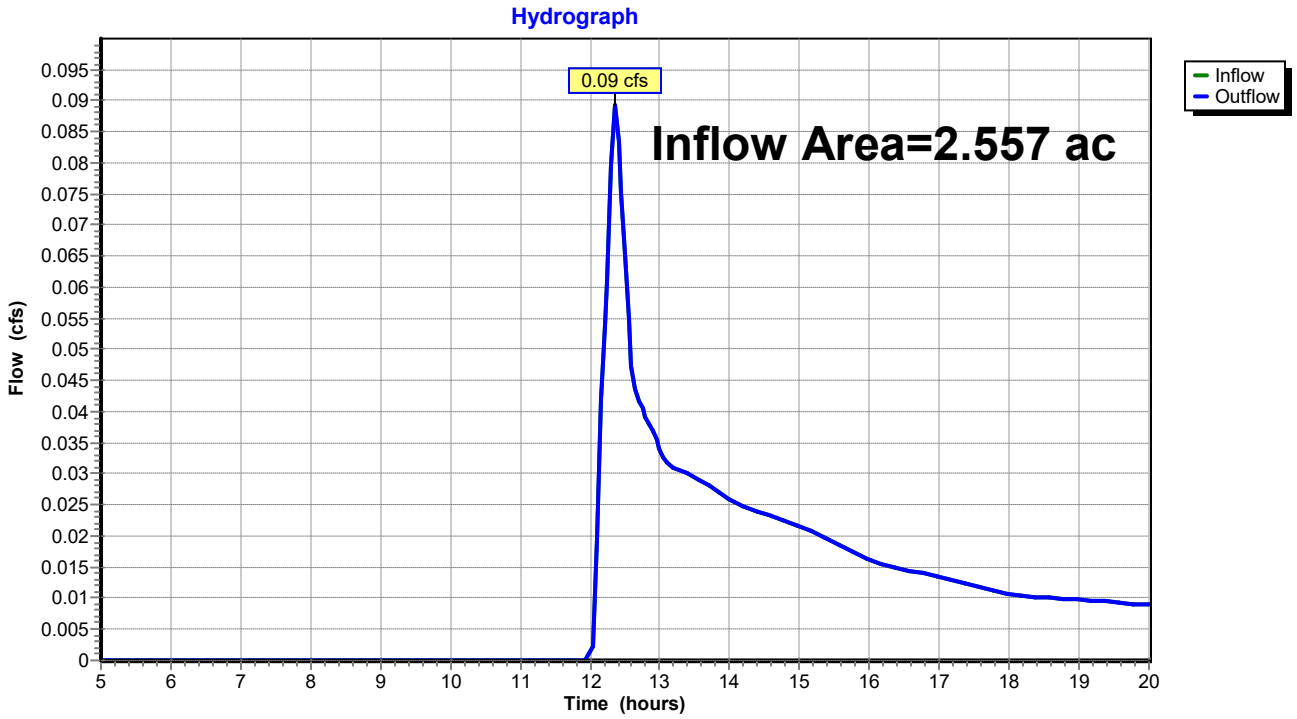

Summary for Pond 1P: Bioretention Filter Cell 1

Inflow Area = 0.226 ac, 50.01% Impervious, Inflow Depth > 0.20" for WQ event
Inflow = 0.06 cfs @ 12.03 hrs, Volume= 0.004 af
Outflow = 0.02 cfs @ 12.36 hrs, Volume= 0.003 af, Atten= 58%, Lag= 19.8 min
Primary = 0.02 cfs @ 12.36 hrs, Volume= 0.003 af
Routed to Pond 2P : CB-1

Routing by Stor-Ind method, Time Span= 5.00-20.00 hrs, dt= 0.05 hrs
Peak Elev= 18.01' @ 12.36 hrs Surf.Area= 217 sf Storage= 56 cf

Plug-Flow detention time= 130.6 min calculated for 0.003 af (67% of inflow)
Center-of-Mass det. time= 53.4 min (884.3 - 831.0)

Volume	Invert	Avail.Storage	Storage Description
#1	17.50'	200 cf	**Custom Stage Data (Prismatic)** Listed below (Recalc)

Elevation (feet)	Surf.Area (sq-ft)	Inc.Store (cubic-feet)	Cum.Store (cubic-feet)
17.50	0	0	0
18.00	213	53	53
18.50	372	146	200

Device	Routing	Invert	Outlet Devices
#1	Primary	18.00'	**18.0" Horiz. Orifice/Grate** C= 0.600 in 24.0" Grate (56% open area) Limited to weir flow at low heads

Primary OutFlow Max=0.02 cfs @ 12.36 hrs HW=18.01' (Free Discharge)
↑—**1=Orifice/Grate** (Weir Controls 0.02 cfs @ 0.37 fps)

Pond 1P: Bioretention Filter Cell 1

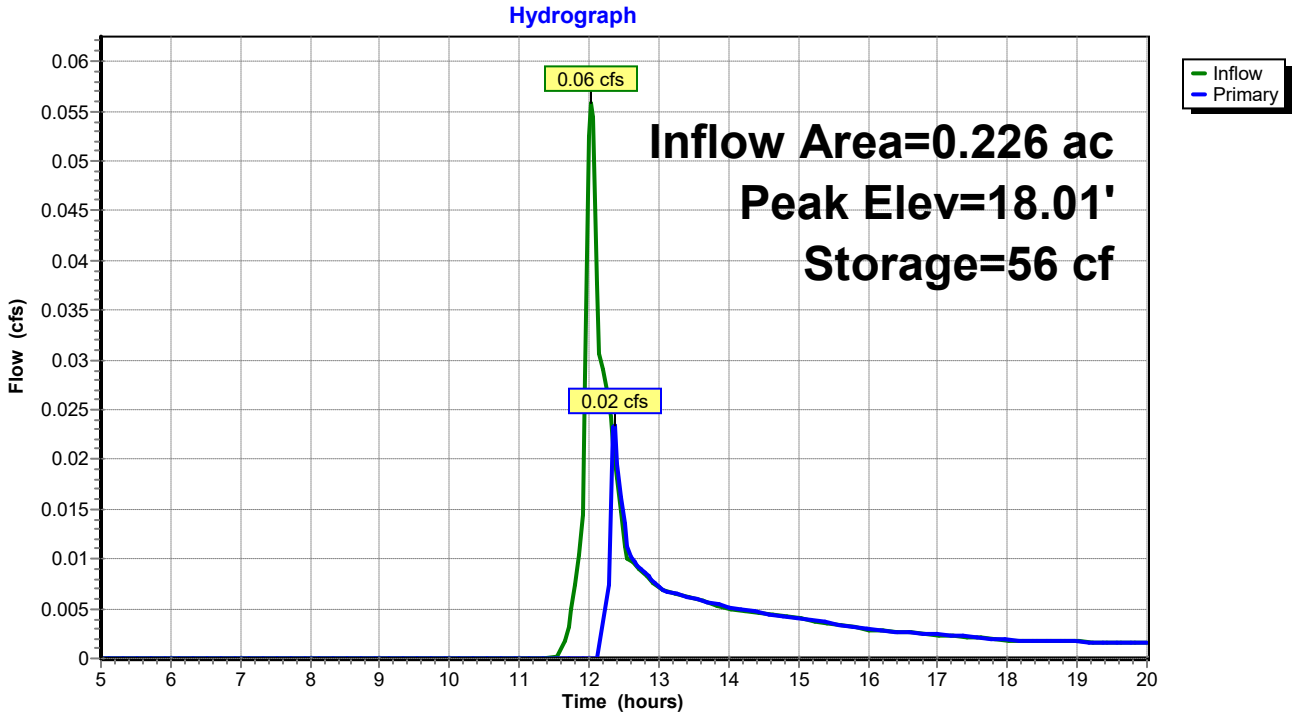

Summary for Pond 2P: CB-1

Inflow Area = 0.226 ac, 50.01% Impervious, Inflow Depth > 0.14" for WQ event
Inflow = 0.02 cfs @ 12.36 hrs, Volume= 0.003 af
Outflow = 0.02 cfs @ 12.36 hrs, Volume= 0.003 af, Atten= 0%, Lag= 0.0 min
Primary = 0.02 cfs @ 12.36 hrs, Volume= 0.003 af
Routed to Reach 1R : Reach 1

Routing by Stor-Ind method, Time Span= 5.00-20.00 hrs, dt= 0.05 hrs
Peak Elev= 13.83' @ 12.36 hrs

Device	Routing	Invert	Outlet Devices
#1	Primary	13.75'	**15.0" Round Culvert** L= 48.0' CPP, projecting, no headwall, Ke= 0.900 Inlet / Outlet Invert= 13.75' / 12.00' S= 0.0365 '/' Cc= 0.900 n= 0.013 Corrugated PE, smooth interior, Flow Area= 1.23 sf

Primary OutFlow Max=0.02 cfs @ 12.36 hrs HW=13.83' (Free Discharge)
1=Culvert (Inlet Controls 0.02 cfs @ 0.74 fps)

Pond 2P: CB-1

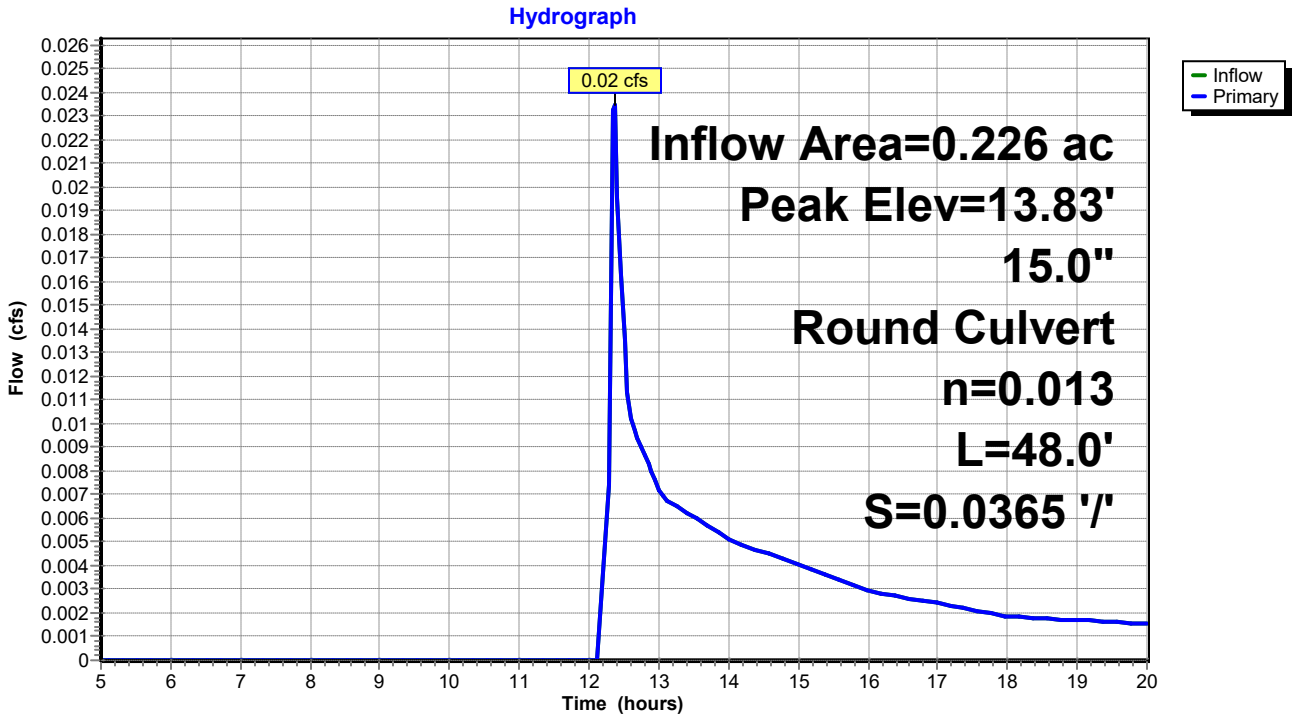

Summary for Pond 3P: Bioretention Filter Cell 2

Inflow Area = 0.307 ac, 33.49% Impervious, Inflow Depth > 0.13" for WQ event
Inflow = 0.04 cfs @ 12.11 hrs, Volume= 0.003 af
Outflow = 0.02 cfs @ 12.48 hrs, Volume= 0.002 af, Atten= 56%, Lag= 22.5 min
Primary = 0.02 cfs @ 12.48 hrs, Volume= 0.002 af
Routed to Pond 4P : CB-2

Routing by Stor-Ind method, Time Span= 5.00-20.00 hrs, dt= 0.05 hrs
Peak Elev= 23.51' @ 12.48 hrs Surf.Area= 171 sf Storage= 44 cf

Plug-Flow detention time= 120.8 min calculated for 0.002 af (72% of inflow)
Center-of-Mass det. time= 48.7 min (900.5 - 851.8)

Volume	Invert	Avail.Storage	Storage Description
#1	23.00'	380 cf	**Custom Stage Data (Prismatic)** Listed below (Recalc)

Elevation (feet)	Surf.Area (sq-ft)	Inc.Store (cubic-feet)	Cum.Store (cubic-feet)
23.00	0	0	0
24.00	335	168	168
24.50	515	213	380

Device	Routing	Invert	Outlet Devices
#1	Primary	23.50'	**18.0" Horiz. Orifice/Grate** C= 0.600 in 24.0" Grate (56% open area) Limited to weir flow at low heads

Primary OutFlow Max=0.02 cfs @ 12.48 hrs HW=23.51' (Free Discharge)
↑**1=Orifice/Grate** (Weir Controls 0.02 cfs @ 0.33 fps)

Pond 3P: Bioretention Filter Cell 2

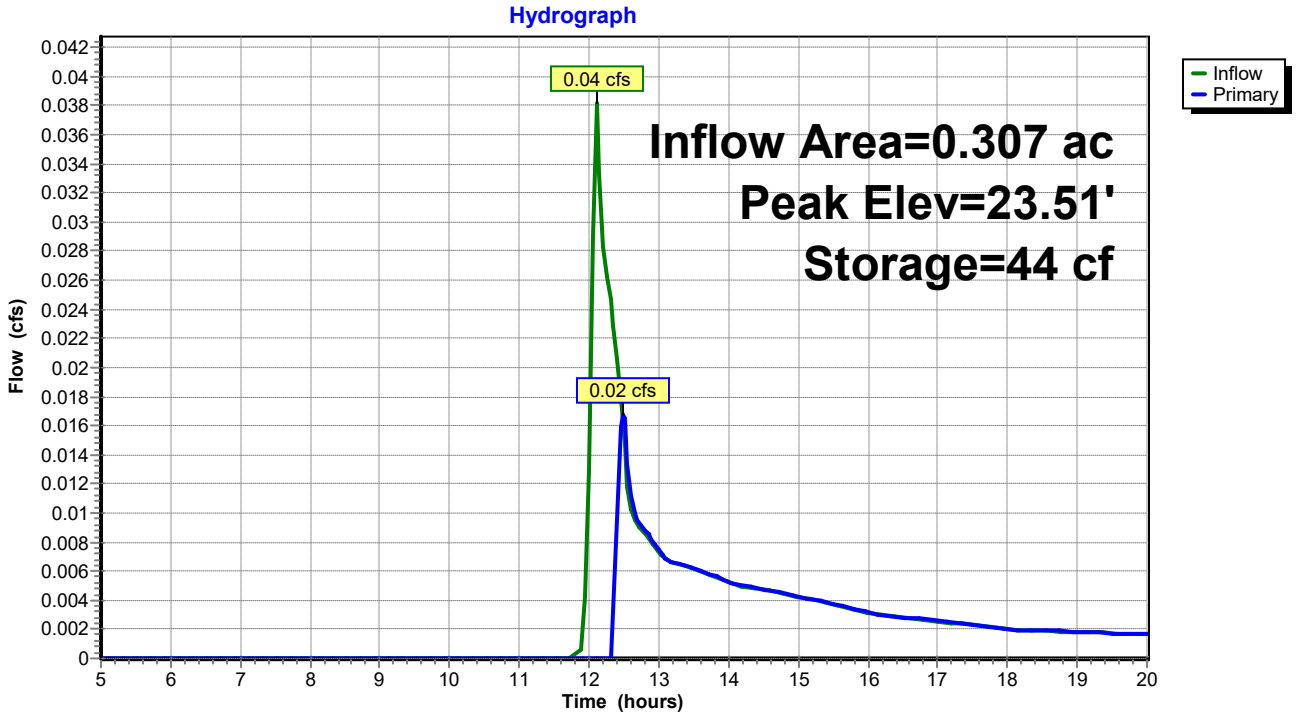

Summary for Pond 4P: CB-2

Inflow Area = 0.307 ac, 33.49% Impervious, Inflow Depth > 0.10" for WQ event
Inflow = 0.02 cfs @ 12.48 hrs, Volume= 0.002 af
Outflow = 0.02 cfs @ 12.48 hrs, Volume= 0.002 af, Atten= 0%, Lag= 0.0 min
Primary = 0.02 cfs @ 12.48 hrs, Volume= 0.002 af
Routed to Pond 5P : Level Lip Speader

Routing by Stor-Ind method, Time Span= 5.00-20.00 hrs, dt= 0.05 hrs
Peak Elev= 18.81' @ 12.48 hrs

Device	Routing	Invert	Outlet Devices
#1	Primary	18.75'	**18.0" Round Culvert** L= 40.0' CPP, projecting, no headwall, Ke= 0.900 Inlet / Outlet Invert= 18.75' / 18.00' S= 0.0187 '/' Cc= 0.900 n= 0.013 Corrugated PE, smooth interior, Flow Area= 1.77 sf

Primary OutFlow Max=0.02 cfs @ 12.48 hrs HW=18.81' (Free Discharge)
1=Culvert (Inlet Controls 0.02 cfs @ 0.66 fps)

Pond 4P: CB-2

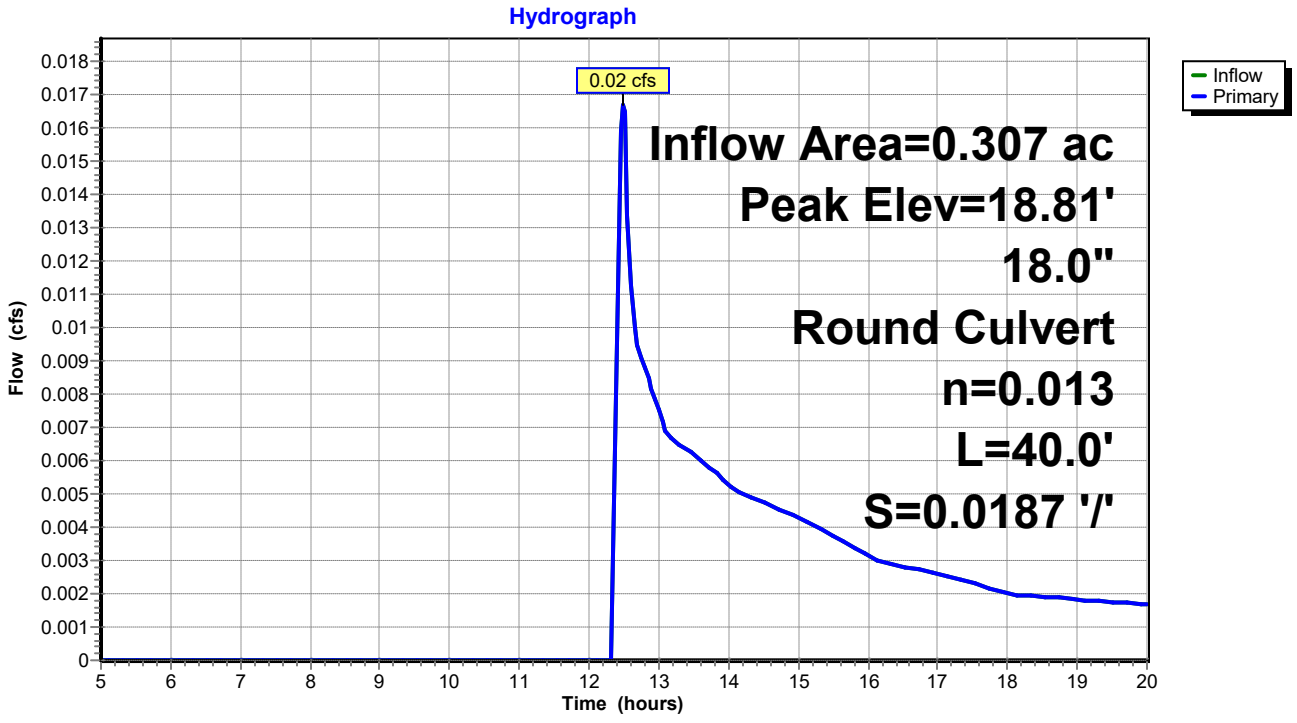

Summary for Pond 5P: Level Lip Speader

Inflow Area = 0.307 ac, 33.49% Impervious, Inflow Depth > 0.10" for WQ event
Inflow = 0.02 cfs @ 12.48 hrs, Volume= 0.002 af
Outflow = 0.00 cfs @ 5.00 hrs, Volume= 0.000 af, Atten= 100%, Lag= 0.0 min
Primary = 0.00 cfs @ 5.00 hrs, Volume= 0.000 af
Routed to Reach 2R : Reach 2

Routing by Stor-Ind method, Time Span= 5.00-20.00 hrs, dt= 0.05 hrs
Peak Elev= 17.95' @ 20.00 hrs Surf.Area= 163 sf Storage= 106 cf
Flood Elev= 20.00' Surf.Area= 168 sf Storage= 115 cf

Plug-Flow detention time= (not calculated: initial storage exceeds outflow)
Center-of-Mass det. time= (not calculated: no outflow)

Volume	Invert	Avail.Storage	Storage Description
#1	17.00'	115 cf	**Custom Stage Data (Prismatic)** Listed below (Recalc)

Elevation (feet)	Surf.Area (sq-ft)	Voids (%)	Inc.Store (cubic-feet)	Cum.Store (cubic-feet)
17.00	61	0.0	0	0
18.00	168	100.0	115	115

Device	Routing	Invert	Outlet Devices
#0	Primary	18.00'	**Automatic Storage Overflow** (Discharged without head)

Primary OutFlow Max=0.00 cfs @ 5.00 hrs HW=17.00' (Free Discharge)

Pond 5P: Level Lip Speader

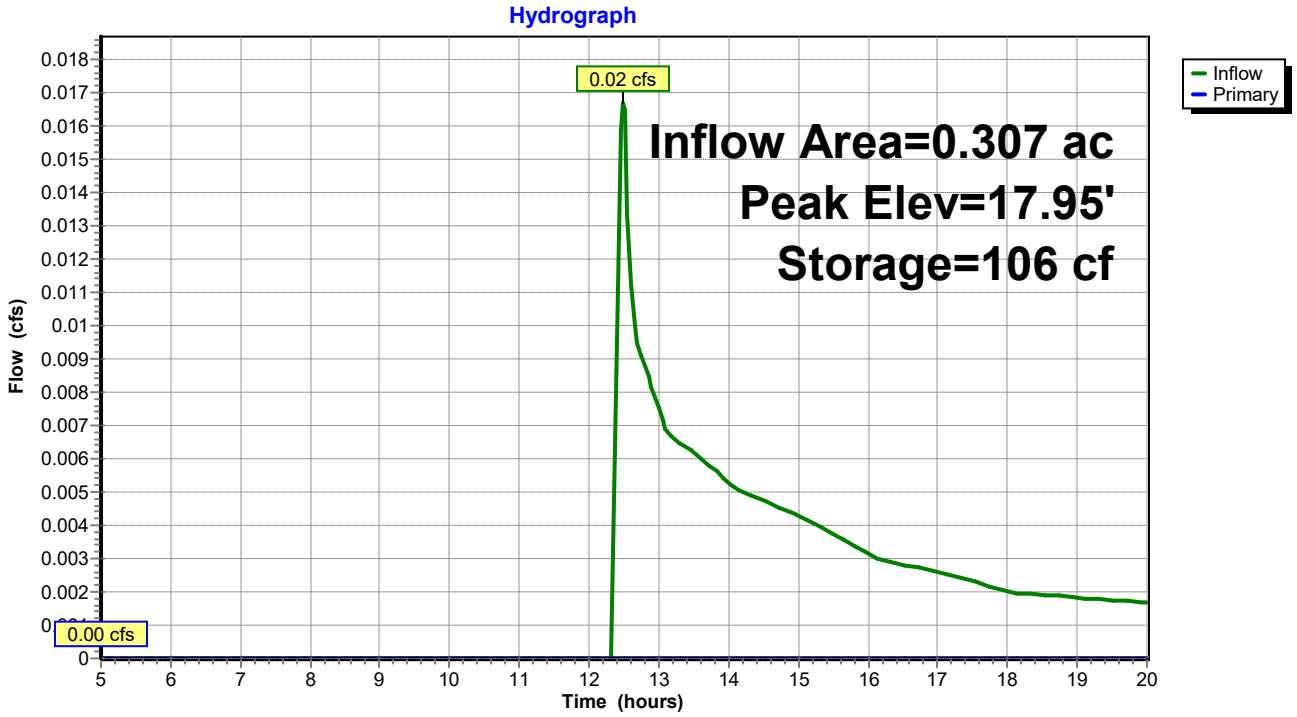

Summary for Link DP1: DP1

Inflow Area = 0.489 ac, 28.87% Impervious, Inflow Depth > 0.09" for WQ event
Inflow = 0.03 cfs @ 12.36 hrs, Volume= 0.004 af
Primary = 0.03 cfs @ 12.36 hrs, Volume= 0.004 af, Atten= 0%, Lag= 0.0 min
Routed to Reach SP1 : SACO RIVER / OCEAN

Primary outflow = Inflow, Time Span= 5.00-20.00 hrs, dt= 0.05 hrs

Link DP1: DP1

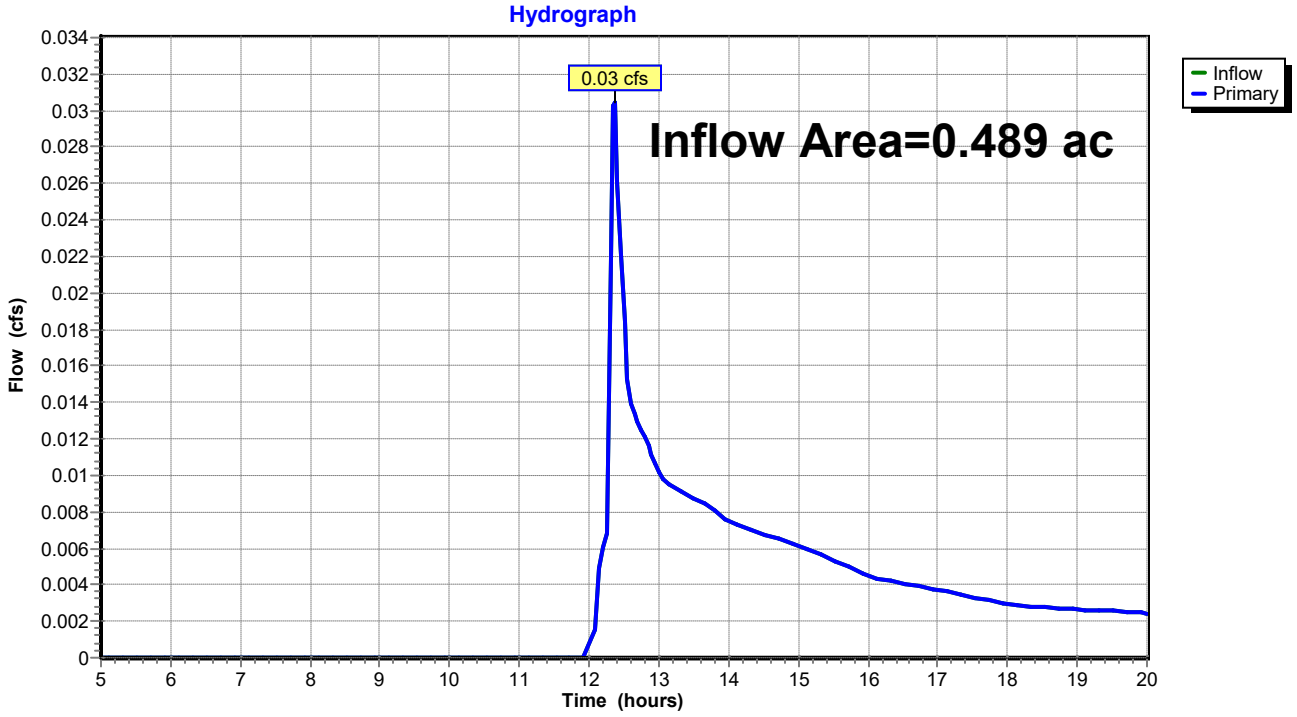

Summary for Link DP2: DP2

Inflow Area = 0.709 ac, 15.44% Impervious, Inflow Depth > 0.03" for WQ event
Inflow = 0.01 cfs @ 12.38 hrs, Volume= 0.002 af
Primary = 0.01 cfs @ 12.38 hrs, Volume= 0.002 af, Atten= 0%, Lag= 0.0 min
Routed to Reach SP1 : SACO RIVER / OCEAN

Primary outflow = Inflow, Time Span= 5.00-20.00 hrs, dt= 0.05 hrs

Link DP2: DP2

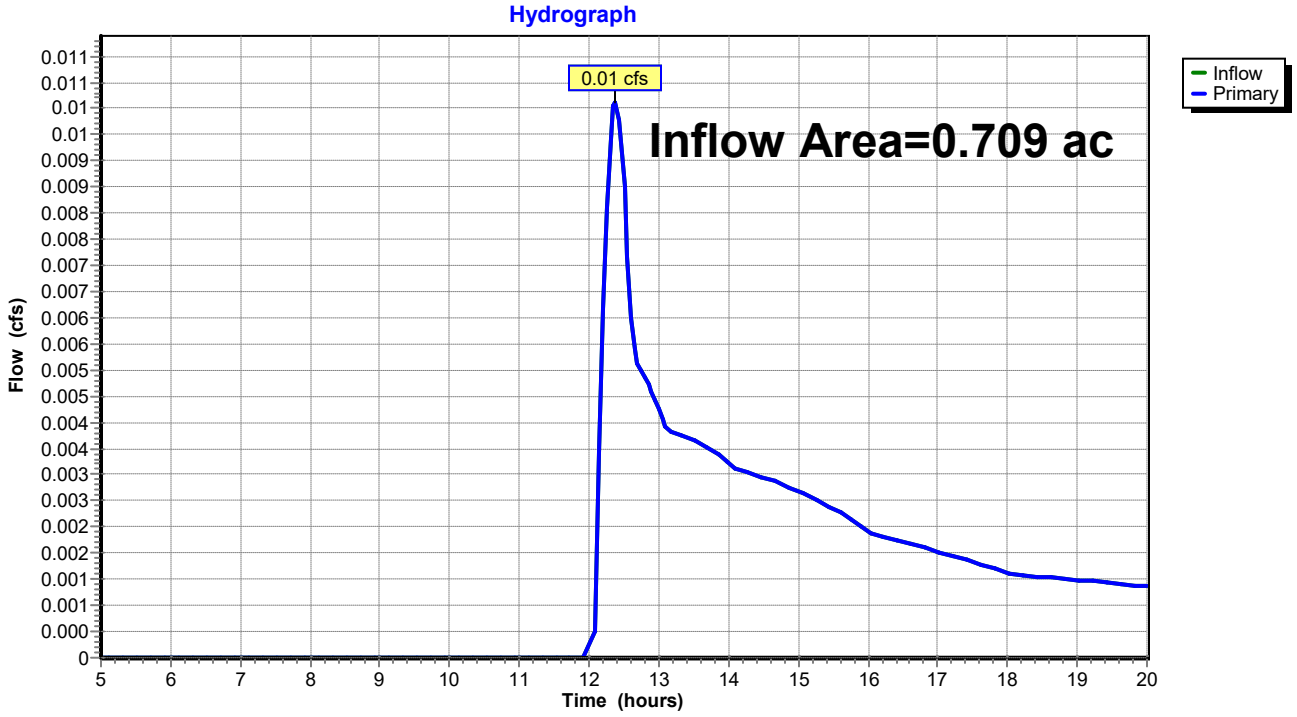

TABLE OF CONTENTS

Project Reports
1 Routing Diagram
2 Project Notes
3 Rainfall Events Listing
4 Area Listing (all nodes)
5 Soil Listing (all nodes)
6 Ground Covers (all nodes)
7 Pipe Listing (all nodes)

2-yr Event
8 Node Listing
10 Subcat 1S: Post Subcatchment 1
12 Subcat 2S: Post Subcatchment 2
13 Subcat 3S: Post Subcatchment 3
15 Subcat 4S: Post Subcatchment 4
16 Subcat 5S: Post Subcatchment 5
18 Reach 1R: Reach 1
19 Reach 2R: Reach 2
20 Reach DP3: Shoreline 3
21 Reach SP1: SACO RIVER / OCEAN
22 Pond 1P: Bioretention Filter Cell 1
24 Pond 2P: CB-1
25 Pond 3P: Bioretention Filter Cell 2
27 Pond 4P: CB-2
28 Pond 5P: Level Lip Speader
30 Link DP1: DP1
31 Link DP2: DP2

10-yr Event
32 Node Listing
34 Subcat 1S: Post Subcatchment 1
36 Subcat 2S: Post Subcatchment 2
37 Subcat 3S: Post Subcatchment 3
39 Subcat 4S: Post Subcatchment 4
40 Subcat 5S: Post Subcatchment 5
42 Reach 1R: Reach 1
43 Reach 2R: Reach 2
44 Reach DP3: Shoreline 3
45 Reach SP1: SACO RIVER / OCEAN
46 Pond 1P: Bioretention Filter Cell 1
48 Pond 2P: CB-1
49 Pond 3P: Bioretention Filter Cell 2
51 Pond 4P: CB-2
52 Pond 5P: Level Lip Speader
54 Link DP1: DP1
55 Link DP2: DP2

25-yr Event

56 Node Listing
58 Subcat 1S: Post Subcatchment 1
60 Subcat 2S: Post Subcatchment 2
61 Subcat 3S: Post Subcatchment 3
63 Subcat 4S: Post Subcatchment 4
64 Subcat 5S: Post Subcatchment 5
66 Reach 1R: Reach 1
67 Reach 2R: Reach 2
68 Reach DP3: Shoreline 3
69 Reach SP1: SACO RIVER / OCEAN
70 Pond 1P: Bioretention Filter Cell 1
72 Pond 2P: CB-1
73 Pond 3P: Bioretention Filter Cell 2
75 Pond 4P: CB-2
76 Pond 5P: Level Lip Speader
78 Link DP1: DP1
79 Link DP2: DP2

100-yr Event

80 Node Listing
82 Subcat 1S: Post Subcatchment 1
84 Subcat 2S: Post Subcatchment 2
85 Subcat 3S: Post Subcatchment 3
87 Subcat 4S: Post Subcatchment 4
88 Subcat 5S: Post Subcatchment 5
90 Reach 1R: Reach 1
91 Reach 2R: Reach 2
92 Reach DP3: Shoreline 3
93 Reach SP1: SACO RIVER / OCEAN
94 Pond 1P: Bioretention Filter Cell 1
96 Pond 2P: CB-1
97 Pond 3P: Bioretention Filter Cell 2
99 Pond 4P: CB-2
100 Pond 5P: Level Lip Speader
102 Link DP1: DP1
103 Link DP2: DP2

WQ Event

104 Node Listing
106 Subcat 1S: Post Subcatchment 1
108 Subcat 2S: Post Subcatchment 2
109 Subcat 3S: Post Subcatchment 3
111 Subcat 4S: Post Subcatchment 4
112 Subcat 5S: Post Subcatchment 5
114 Reach 1R: Reach 1
115 Reach 2R: Reach 2
116 Reach DP3: Shoreline 3

117 Reach SP1: SACO RIVER / OCEAN
118 Pond 1P: Bioretention Filter Cell 1
120 Pond 2P: CB-1
121 Pond 3P: Bioretention Filter Cell 2
123 Pond 4P: CB-2
124 Pond 5P: Level Lip Speader
126 Link DP1: DP1
127 Link DP2: DP2

Pipe Schedule
UNE Marine Sciene Center Pier
Biddeford, Maine

PROPOSED PIPES (BIORETENTION FILTER CELLS)

From	Inv	To	Inv	AREAS Paved 0.98	AREAS Open 'C' 0.61	AREAS Total (sf)	C	A (ac)	CA (ac)	ΣCA (ac)	Tc (min)	i25 (in/hr)	Q25 (req) (CFS)	Type	Pipe n	Leng (ft)	Dia (in)	Slope (%)	Vel ¼ Full (ft/sec)	Vel (ft/sec)	Q (prov) (CFS)	Q (Prov) > Q (Req'd)
SF-A	18.75	**18" Outfall**	18.00	3,935	5,897	9,832	FLOW FROM HYDROLOGY MODEL						1.33	HDPE	0.012	40	18	1.88%	6.18	8.82	15.58	good
SF-B	13.75	**15" Outfall**	12.00	3,768	9,597	13,365	FLOW FROM HYDROLOGY MODEL						1.56	HDPE	0.012	48	15	3.65%	7.63	10.89	13.36	good

Appendix D

Inspection and Maintenance Plan

Owner Responsible for Maintenance

All maintenance plans for stormwater management measures must include the following:

> The name, address, and telephone number of the person or persons responsible for the preventative and corrective maintenance of the stormwater management measure. If the plan identifies a party other than the owner or developer as having responsibility for maintenance, i.e., a public entity or homeowners' association, the plan must include a copy of the other party's written agreement to assume this responsibility. This agreement must include a copy of any ordinance or regulation that requires the owner or developer to dedicate the stormwater management measure and/or its maintenance to the other party.

Information of the Person Responsible for Maintenance:

Name:

Address:

Telephone:

If an entity other than the above listed property owner or the developer will have the responsibility for stormwater pond maintenance, then they will provide a copy of the designated party's written agreement to assume this responsibility.

University of New England
Biddeford, Maine
August 2024

INSPECTION AND MAINTENANCE PLAN OF STORMWATER MANAGEMENT FACILITIES

Stormwater Management Facilities include swales, paved surfaces, manholes and catch basins, drain pipe, riprapped aprons, level spreaders, wooded buffers, and underdrained soil filters. Periodic inspection and maintenance of these site features and devices is necessary to prevent erosion, protect roadways and other paved areas, and remove pollutants from stormwater runoff. Best management practices and stormwater facilities should be inspected as noted below, and after a rainfall event of 1" or more in 24 hours.

University of New England Facilities Department is responsible for the inspections and maintenance of stormwater facilities associated with this project.

RECERTIFICATION REQUIREMENT:

Within three months of the expiration of each five-year interval from the date of issuance of the permit, the Owner or Association shall certify the following to the Maine Department of Environmental Protection (the department):

a) All areas of the project site have been inspected for areas of erosion, and appropriate steps have been taken to permanently stabilize these areas.

b) All aspects of the stormwater control system have been inspected for damage, wear, and malfunction, and appropriate steps have been taken to repair or replace the facilities.

c) The erosion and stormwater maintenance plan for the site is being implemented as written, or modifications to the plan have been submitted to and approved by the department and the maintenance log is being maintained and kept on file with Town Engineers office.

d) A copy of the certification along with any required mitigation shall be provided to the Town Engineer.

SWALES, DITCHES, CURBS AND PAVED AREAS:

Swales, ditches, curbs and paved areas are easily inspected during a site walk or even a ride-by. Since visual inspection is easy, their condition should be assessed during and/or after significant rainfall events such as thunder showers and periods of heavy or extended rainfall and during periods of significant snowmelt. Any damage or unusual condition such as sedimentation of a ditch, erosion, damaged curb or dying vegetation should be recorded, dated and initialed by the inspector when observed. Even if there is no damage, the inspector should make record of these inspections at least twice annually.

Paved areas should be visually inspected monthly during the winter. The inspector should pay particular attention to the build up of sand around catch basin grates and remove accumulations that block the free flow of surface runoff to the catch basins. The date and initials of the inspector should be recorded on the forms provided as well as a notation of any cleanup effort that was made and the

approximate volume of sand that was removed.

Open swales and ditches shall be inspected twice per year (in spring and fall) to assure that debris and/or sediments do not reduce the effectiveness of the system. Debris and sediments shall be removed at that time. Any sign of erosion or blockage shall be immediately repaired to assure a vigorous growth of vegetation for the stability of the ditches and slopes proper function. Maintenance shall include, but not be limited to, mowing, trimming and removal of vegetation in the ditches and slopes as required in order to prevent vegetation from blocking or diverting storm flows, replacement of riprap channel lining to prevent scour of the channel invert, removing vegetation and debris from the culverts.

Vegetated ditches should be mowed at least monthly during the growing season. Larger brush or trees must not be allowed to become established in the channel. Any areas where the vegetation fails will be subject to erosion and should be reseeded and mulched immediately.

CATCH BASINS, FIELD INLETS AND DRAIN MANHOLES:

Catch Basins and field inlets are precast concrete structures with sumps and cast iron grates used to collect stormwater and trap heavy sediments. Drain Manholes are similar structures constructed with a channel instead of a sump and a solid cast iron cover instead of a grate. Drain Manholes exist at changes in direction and/or size of storm drain pipe. Catch Basins, field inlets and drain manholes provide access to the closed storm drain system for inspection and maintenance.

Throughout the winter / spring sanding period, inspect catch basins and field inlets monthly and after every significant rainfall event or period of heavy snowmelt. Clean catch basin and field inlet sumps when sediment level is within 12 inches of the outlet pipe invert. At a minimum, remove floating debris and hydrocarbons at the time of the inspection. The removed material must be disposed of in accordance with the Maine Solid Waste Disposal Rules. Confined space entry safety procedures shall be practiced should entry into these structures be required.

Record dates of inspections, observations and maintenance measures implemented (if any) on the forms provided and initial the entry.

DRAIN PIPES:

Drain pipes are road culverts and pipes connecting drain manholes. Inspect drain pipes when inspecting other stormwater maintenance facilities. At least annually make a visual inspection of the pipe. During the daylight you should be able to see light through most pipes as they have been laid to a straight line and grade. In some cases (e.g. pipe runs to a drain manhole, or is blocked) you will need a light to inspect pipes.

Remove any obstructions to flow; remove accumulated sediments and debris at the inlet, at the outlet, and within the conduit; and to repair any erosion damage at the pipe inlet and outlet. Sediment should be removed when its level exceeds 20% of the pipe diameter. This may be accomplished by hydraulic flushing or any mechanical means; however, care should be taken to contain the sediment at the pipe outlet, and not flush the sediments into the stormwater filter or wetland areas.

Riprap aprons where stone is displaced should be replaced and chinked to assure stability. With time, additional riprap may be added. Vegetation growing through riprap should be removed on an annual basis.

Record inspections on the forms provided noting condition of pipe and any maintenance procedures implemented.

LEVEL SPREADERS:

Level Spreaders are shallow basins or ditches constructed at the ends of ditches or pipe outlets to disperse or "spread" concentrated flow thinly over a receiving area. Level Spreaders are constructed along the natural contour of the land to create a level "lip" on the outlet side. The integrity of the level lip is critical to the proper performance of this device.

Inspect the Level Spreader at least once each season and following significant rainfall events (1 inch or more of rain in 12 hours). Record inspections on the forms provided noting your observations and any corrective action taken. Any sign of erosion or blockage shall be immediately repaired to assure a vigorous growth of vegetation and stability of stone berms for the stability of the level spreader for proper function. Minor regrading, releveling of the stone “lip,” and reseeding of the level lip on an annual basis should be anticipated. Mow level lips at least twice during the growing season. Maintenance may also include removal of sediment buildup especially on the inlet end.

UNDERDRAINED SOIL FILTERS:

An underdrained soil filter is a landscaped depression with an underdrained soil bed or soil filter that exfiltrates the stormwater. The depression is designed to temporarily store runoff, which will drain through the soil filter into the underdrains; excess runoff will flow into structures or over earthen spillways.

Soil Filter Inspection: The soil filter should be inspected after every major storm in the first few months to ensure proper function. Thereafter, the filter should be inspected at least once every six months to ensure that it is draining within 48 hours; and that, after storms that fill the system to overflow, it drains in no less than 24 hours. If the filter drains too rapidly, (i.e. prior to 24 hours), then an adjustable orifice shall be installed on the underdrain outlet pipe. The orifice shall be adjusted such that the filter completely drains within 24 to 72 hours.

Underdrain System: The soil filter outlet consists of a layer of planting loam and sand with a stone and perforated pipe underdrain. Outlet inspections shall include flushing of the underdrain through the cleanouts at the end of the pipes. Trash, sediment, and debris shall be removed from the vicinity of the outlet and must be disposed of in accordance with the Maine Solid Waste Disposal Rules.

Soil Filter Replacement: If the filter fails to drain within 72 hours, the surface of the pond shall be rototilled to promote aeration of the filter media and vegetation shall be re-established. If aeration of the surface soil fails to promote filtration of impounded water within 72 hours, then the filter media shall be replaced as necessary. The stone underdrain shall also be replaced at this time, along with the perforated pipe.

Sediment Removal: Sediment and plant debris should be removed from the pretreatment structure at least annually.

Mowing: Filters with grass cover should be mowed no more than 2 times per growing season to maintain grass heights less than 12 inches.

Fertilization: Fertilization of the underdrained filter area should be avoided unless absolutely necessary to establish vegetation.

Harvesting and Weeding: Harvesting and pruning of excessive growth will need to be done occasionally. Weeding to control unwanted or invasive plants may also be necessary. Add new mulch as necessary for bioretention cells.

Underdrained soil filters shall not be used for snow storage area. Vehicular equipment used to maintain or rehabilitate underdrained soil filters should work from the basin perimeter and not enter the basin area, as this will compact the soil surface and reduce the design infiltration rate. Record all maintenance on forms provided.

SEDIMENT DISPOSAL:

Any sediment or debris removed during maintenance of the stormwater system must be disposed of in accordance with the Maine Solid Waste Disposal Rules.

UNIVERSITY OF NEW ENGLAND
BIDDEFORD, MAINE

INSPECTION / MAINTENANCE LOG

SWALES, DITCHES, CURBS AND PAVED SURFACES

I: INSPECTED - C: CLEANED - S: SWEPT - R: REPAIRED

DATE	INITIALS	ACTION	COMMENT
5/10/19	RST	I, C	EXAMPLE: Removed sand around CB's 19 and 20. Heavy rain over the weekend.

UNIVERSITY OF NEW ENGLAND
BIDDEFORD, MAINE

INSPECTION / MAINTENANCE LOG

CATCH BASINS, FIELD INLETS, AND DRAIN MANHOLES

I: INSPECTED - C: CLEANED - R: REPAIRED

DATE	INITIALS	ACTION	COMMENT
6/13/19	JKL	I, C	EXAMPLE: Called ACME to clean catch basins.

UNIVERSITY OF NEW ENGLAND

BIDDEFORD, MAINE

INSPECTION / MAINTENANCE LOG

DRAIN PIPES

I: INSPECTED - C: CLEANED - R: REPAIRED

DATE	INITIALS	ACTION	COMMENT
4/19/18	JKL	I, C	EXAMPLE: Called ACME to clean debris from culvert inlets along Main Road and Loop Road.

UNIVERSITY OF NEW ENGLAND

BIDDEFORD, MAINE

INSPECTION / MAINTENANCE LOG

LEVEL SPREADERS

I: INSPECTED - C: CLEANED - R: REPAIRED

DATE	INITIALS	ACTION	COMMENT
8/16/19	JKL	I, C	EXAMPLE: Inspected level spreaders on site, found minimal sediment build up, stone lips appeared consistently level and functional. Mowed level lips.

UNIVERSITY OF NEW ENGLAND

BIDDEFORD, MAINE

INSPECTION / MAINTENANCE LOG

UNDERDRAINED SOIL FILTERS

I: INSPECTED - C: CLEANED - R: REPAIRED

DATE	INITIALS	Unit #	ACTION	COMMENT
7/6/19	PQR	LA2	I, C	EXAMPLE: Cleared sediment and plant debris from inlet area, mowed filter area, crest, and sideslopes.

STORMWATER MANAGEMENT SYSTEM
MAINTENANCE PROGRAM
SUMMARY CHECKLIST

Item	Commentary	Frequency			
		Month	Semi-Annual	Annual	Long-Term
All Pond and Filter side slopes	Inspect slopes for sloughing, erosion or undesirable tree growth. Mow slopes to control vegetation, repair any structure flaws identified	**X Mow Summer**		**X**	
All Pond and Filter Sediment Removal	Remove sediment when it occupies 15% of volume.				**X 5 Years**
Open Swale, Ditches & Inlet Structures	Inspect for debris accumulation, erosion and excessive vegetation. Mow monthly, remove debris, repair and revegetate any area of erosion	**X Mow**		**X**	
Pavement	Review for damage and buildup of debris and sand.	**X**	**X Sweep**		
Level Spreaders	Review level lip for stability and grass growth, remove sediment and debris		**X**		
Catchbasin and Drain Manholes	Inspect grates to assure optimum water flows into the structures. Inspect sumps for blockage and sediment accumulation. Clean out sumps .	**X Inspect**		**X Sediment removal**	
Pipelines	Inspect for sediment build-up in pipe. Flush and remove as required.			**X**	
Underdrain Soil Filter	Mow twice per year. Inspect for erosion.		**X**		

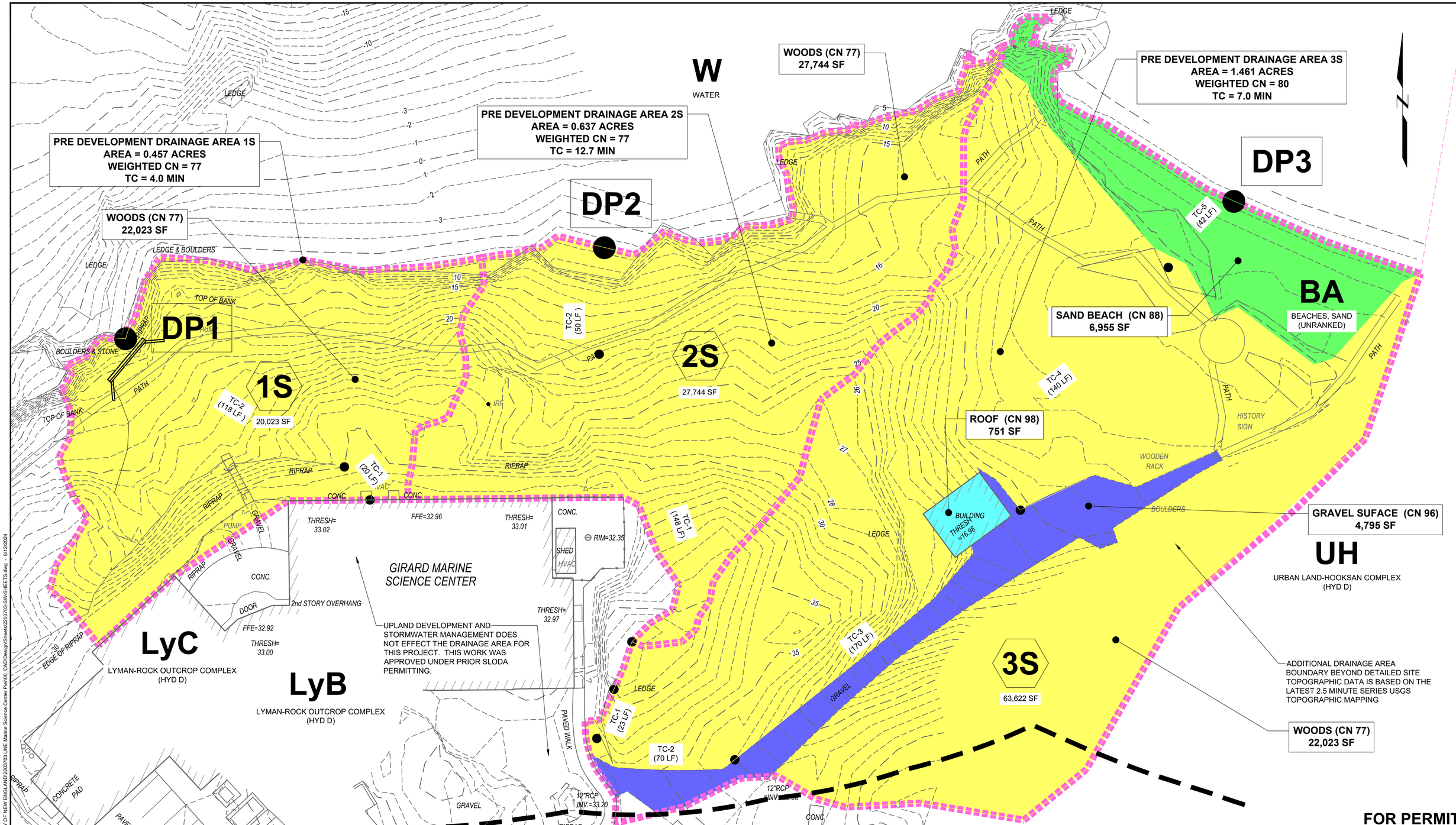

ELEVATION	MLLW	NAVD88*
BFE	+19.0	+14.0
HAT	+11.6	+6.6
MHHW	+9.7	+4.7
MHW	+9.3	+4.3
MSL	+4.8	-0.2
MLW	+0.3	-4.7
MLLW	0.0	-5.0

*PROJECT DATUM

0 20 40
SCALE, FEET

Attention:
0 1"
If this scale bar does not measure 1" then drawing is not original scale.

DRAFT

Designed:	DJB
Drawn:	JAM
Checked:	BJB
Approved:	BMM
P.E. No:	13033
GEI Project	2203703

GEI Consultants
GEI CONSULTANTS, INC.
5 MILK STREET
PORTLAND, ME 04101
(207)797-8901

UNE
UNIVERSITY OF NEW ENGLAND
11 HILLS BEACH RD.
BIDDEFORD, MAINE

UNIVERSITY OF NEW ENGLAND MARINE SCIENCE CENTER PIER
11 HILLS BEACH ROAD
BIDDEFORD, YORK COUNTY, MAINE

NO	DATE	ISSUE/REVISION	APP

SHEET NAME
PRE-DEVELOPMENT DRAINAGE PLAN

SHEET NO.
SW-01

DICASTELNUOVO, VINNIE B:\Working\UNIVERSITY OF NEW ENGLAND\2203703 UNE Marine Science Center Pier\00_CAD\Design\Sheets\2203703-SW-SHEETS.dwg - 8/12/2024

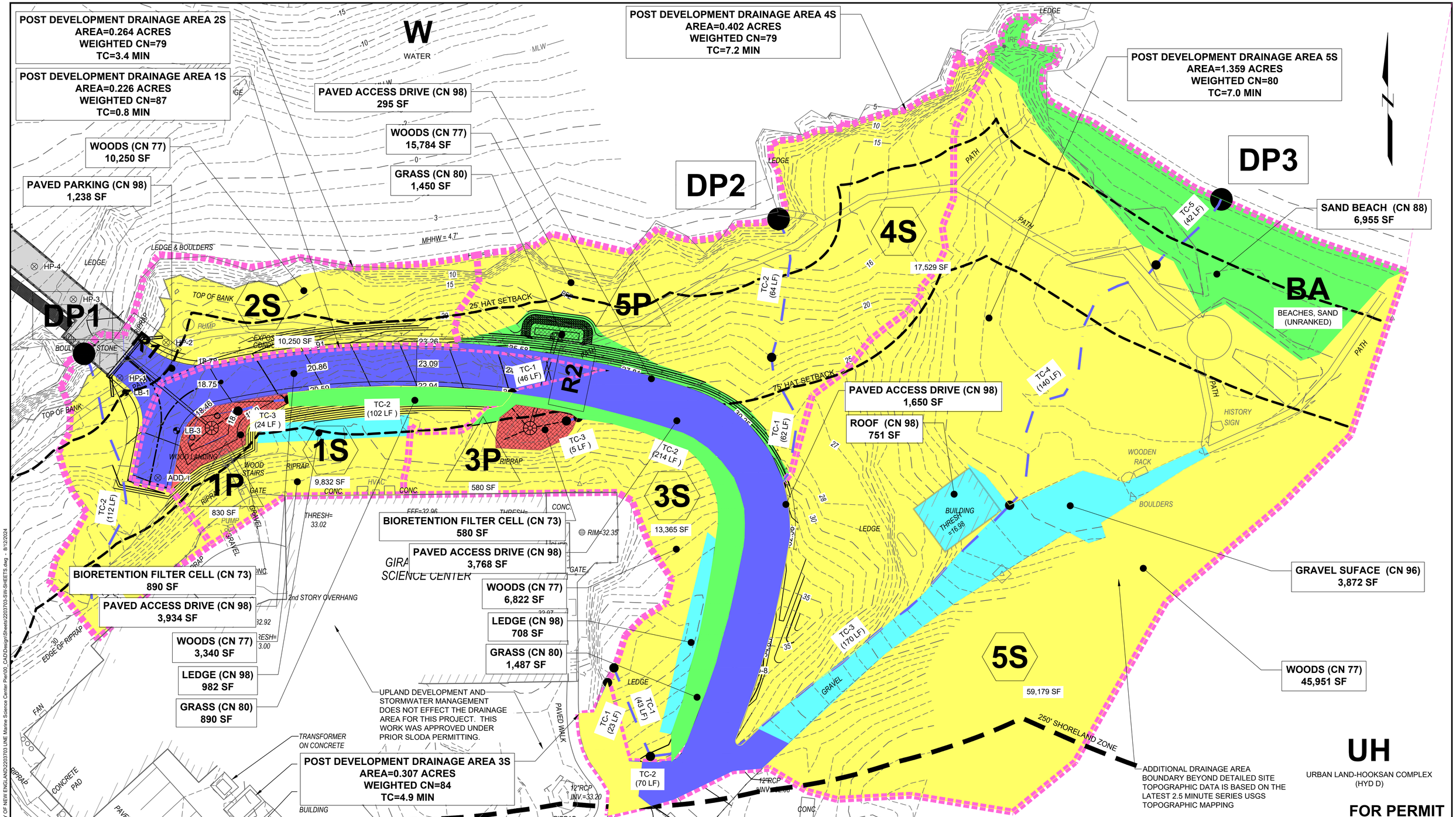

Attention:

0 1"

If this scale bar does not measure 1" then drawing is not original scale.

DRAFT

Designed:	DJB
Drawn:	JAM
Checked:	BJB
Approved:	BMM
P.E. No:	13033
GEI Project	2203703

GEI Consultants
GEI CONSULTANTS, INC.
5 MILK STREET
PORTLAND, ME 04101
(207)797-8901

UNE
UNIVERSITY OF NEW ENGLAND
11 HILLS BEACH RD.
BIDDEFORD, MAINE

UNIVERSITY OF NEW ENGLAND
MARINE SCIENCE CENTER PIER
11 HILLS BEACH ROAD
BIDDEFORD, YORK COUNTY, MAINE

NO	DATE	ISSUE/REVISION	APP

SHEET NAME
POST DEVELOPMENT DRAINAGE PLAN

SHEET NO.
SW-02

DICASTELNUOVO, VINNIE B:\Working\UNIVERSITY OF NEW ENGLAND\2203703 UNE Marine Science Center Pier\00_CAD\Design\Sheets\2203703-SW-SHEETS.dwg - 8/12/2024

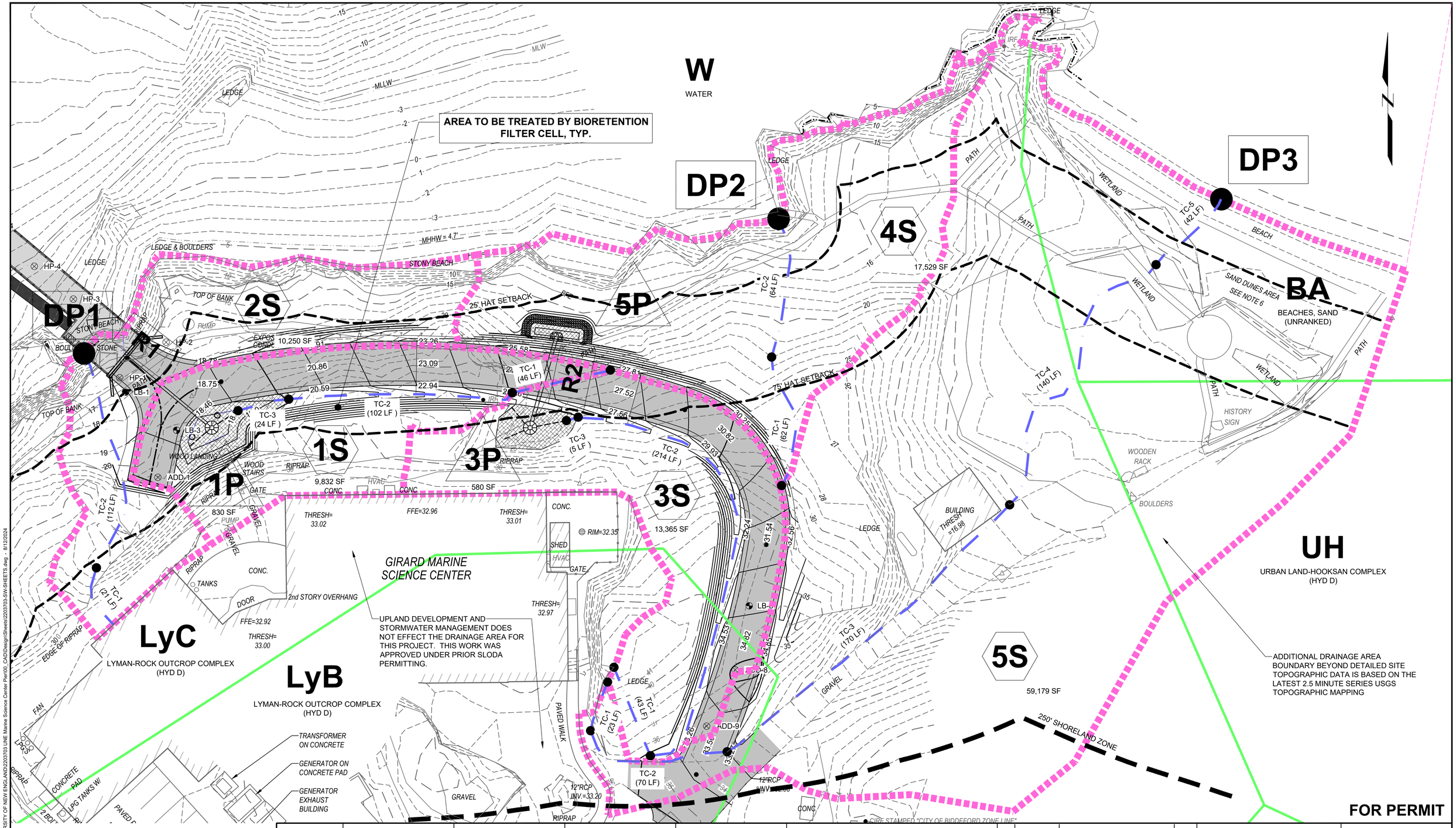

ELEVATION	MLLW	NAVD88*
BFE	+19.0	+14.0
HAT	+11.6	+6.6
MHHW	+9.7	+4.7
MHW	+9.3	+4.3
MSL	+4.8	-0.2
MLW	+0.3	-4.7
MLLW	0.0	-5.0

0 20 40
SCALE: FEET

*PROJECT DATUM

Attention:
0 1"
If this scale bar does not measure 1" then drawing is not original scale.

DRAFT

Designed:	DJB
Drawn:	JAM
Checked:	BJB
Approved:	BMM
P.E. No:	13033
GEI Project	2203703

GEI Consultants
GEI CONSULTANTS, INC.
5 MILK STREET
PORTLAND, ME 04101
(207)797-8901

UNE
UNIVERSITY OF NEW ENGLAND
11 HILLS BEACH RD.
BIDDEFORD, MAINE

UNIVERSITY OF NEW ENGLAND MARINE SCIENCE CENTER PIER

11 HILLS BEACH ROAD
BIDDEFORD, YORK COUNTY, MAINE

NO	DATE	ISSUE/REVISION	APP

SHEET NAME
TREATMENT AREA PLAN

SHEET NO.
SW-03

FOR PERMIT

DICASTELNUOVO, VINNIE B:\Working\UNIVERSITY OF NEW ENGLAND\2203703 UNE Marine Science Center Pier\00_CAD\Design\Sheets\2203703-SW-SHEETS.dwg - 8/12/2024

Attachment 8
Alternatives Analysis
and Memo

Alternatives Analysis

The Plans provided in attachments 5 and 6 detail the preferred alternative. This design was arrived at after extensive study of alternative locations and layouts for the pier over multiple years time. Alternatives considered in developing the proposed project are briefly described below.

2008-2010 Pier Feasibility Study

In 2008-2010, UNE completed a concept planning study for the proposed pier. In this study, nine alternative designs were developed for water access facilities along the UNE waterfront consisting of various configurations of piers, boat ramps, and upland access and support facilities. The alternatives were evaluated on a range of criteria including technical criteria, functionality, constructability, regulatory impacts, cost of construction, and others to identify a preferred facility location. The nine alternatives evaluated through this study are shown in the figure below. At the conclusion of this study, Site 7 (directly in front of the Marine Science Center building) was identified as the preferred facility location to develop a new pier facility that would consist of a pile-supported pier extending from shore out into the Saco River. This location is optimal for access to and from the MSC facility and on the water, and allows for all-tide berthing with a smaller structure and less impact than several adjacent alternatives that were considered. At the conclusion of this study it was determined that Site 7 was the preferred alternative to move forward with further planning and design.

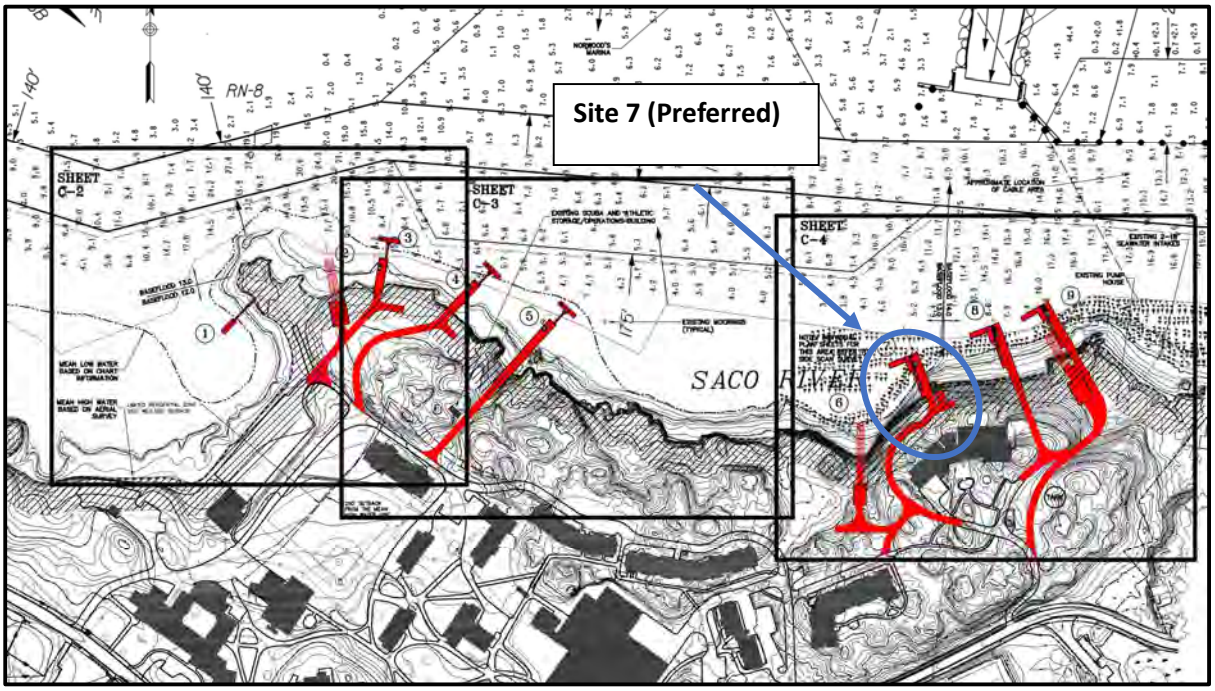

2015-2016 Pier Layout Study

After completion of the pier feasibility study described above, UNE undertook additional effort to study alternative pier layouts that would address the functional needs of the facility as well as the site exposure, berthing conditions, access requirements, and associated site impacts. During this study, numerous alternative pier layouts were considered which are depicted in the two figures that follow.

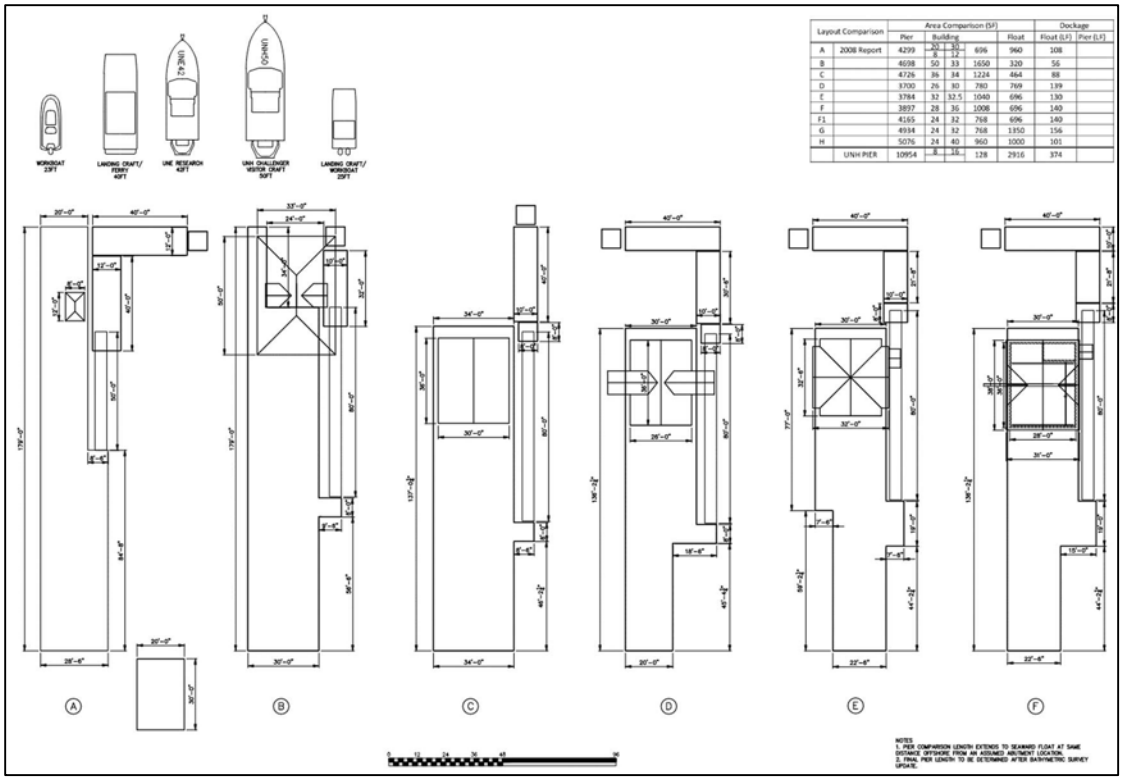

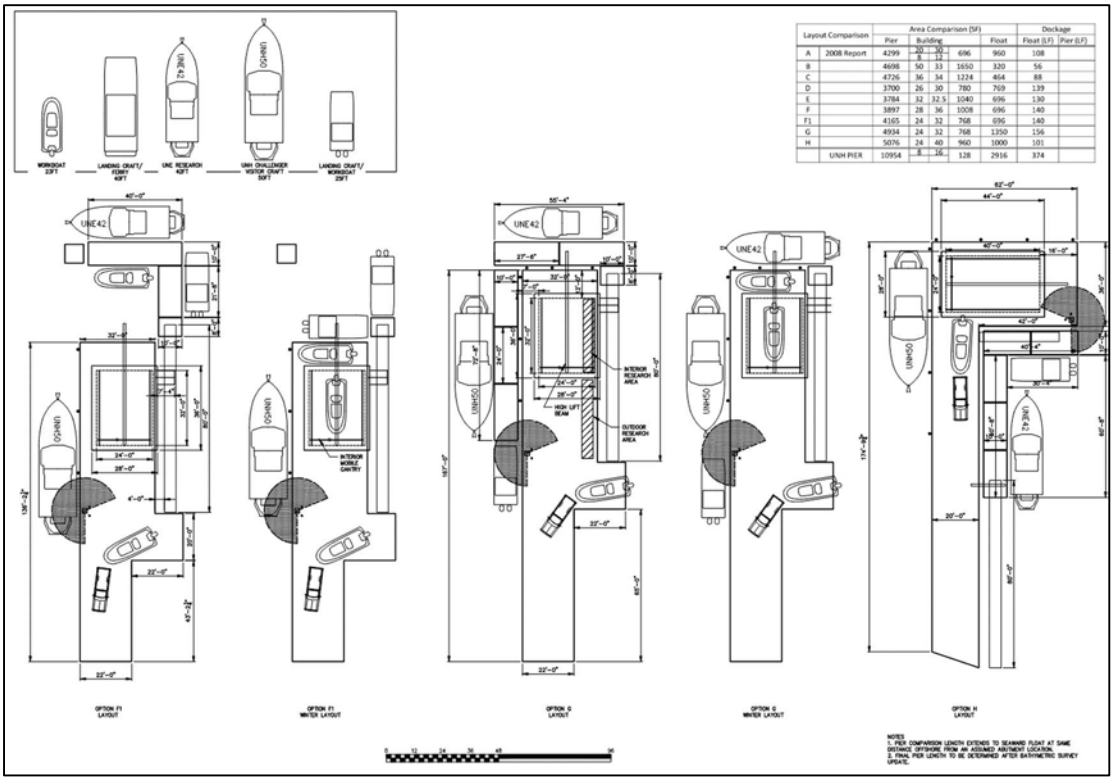

Further alternative development was completed in 2016 to address a realignment of the pier head parallel to the predominant direction of flow in the River for improved berth functionality. These alternatives considered input of the Biddeford Harbormaster and his knowledge of boating and

conditions on the Saco River after review of earlier layouts during a meeting in early 2016. The figure below depicts three alternatives considered during the study.

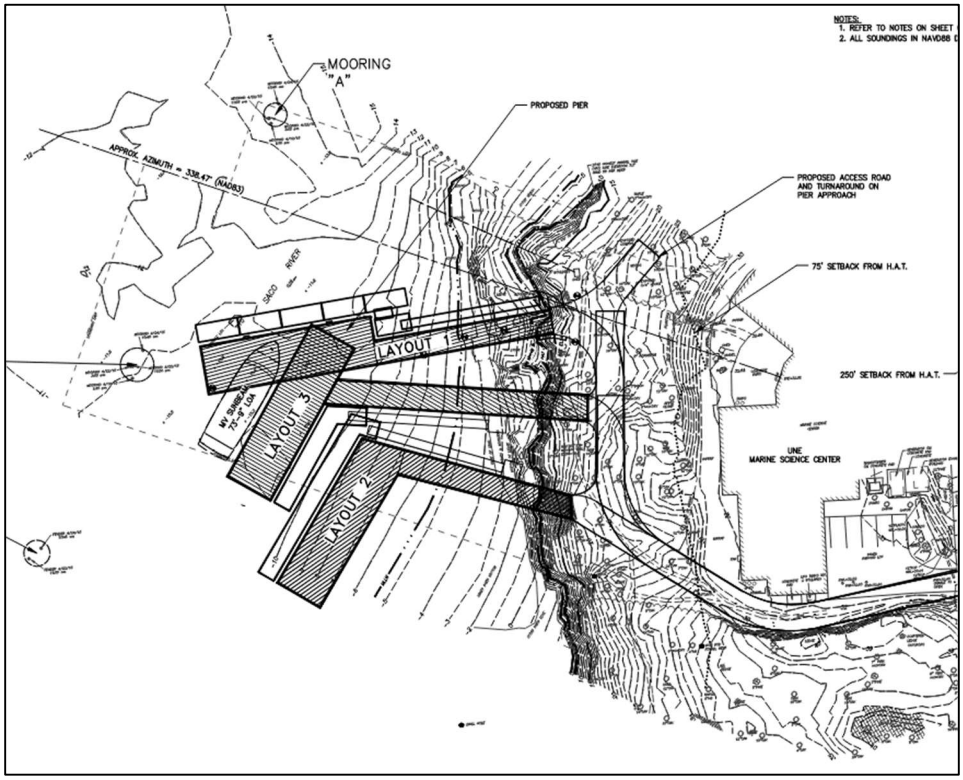

2023 Layout Refinement

During design refinement undertaken in 2023, the preferred alternative was identified as a combination of the pier approach from Layout 1, and the pier head from Layout 3, of the 2016 layout study. The Layout 1 pier approach represents the least impactful and most feasible option for upland site access. The Layout 3 pier head provides more desirable berthing conditions by aligning the main berth with flow directions in the River, and reaches sufficient depth to provide all-tide access for the range of vessels anticipated to use the facility. The layout was then refined somewhat to reduce the size of the structure to keep the dimensions to the minimum necessary to accomplish the functional goals of the project. During this refinement, the dimensions of the pier head were reduced from the initially proposed 28-feet wide by 100-feet long, to the currently proposed 23-feet 4 inches wide by 80-feet long. The dimensions of the float dock system were reduced somewhat, and the layout of fender piles was refined to reflect a functional design with minimum necessary dimensions and impacts.

The preferred alternative as currently presented represents a facility of the smallest dimensions possible to provide a functional facility that provides all-tide access for the range of vessels anticipated to use the facility, and ADA compliant access to the floating dock and gangway system and berthed vessels. While it could be possible to further reduce site impacts by further reducing the dimensions of the facility, any reduction beyond the size that is currently proposed would impact the proposed uses of the facility.

Do Nothing Alternative

A Do Nothing Alternative is the least impactful option, but would fail to address the goal of providing all-tide access to support UNE's marine research and educational programming through the marine science center. The existing seasonal floats and gangway located on the UNE campus upstream of the MSC building do not effectively meet these needs. Therefore, a Do Nothing alternative is not considered to be a feasible long-term solution.

Memo

To:	Andrew Philippe, Director of Campus Planning
From:	Daniel Bannon, P.E., CFM and Barney Baker, P.E.
c:	UNE – Alan Thibeault Site Design Associates – Tom Saucier, P.E. GEI Consultants, Inc. - John Gareau, E.I.
Date:	November 28, 2023
Re:	Proposed GMSC Pier Location University of New England, Girard Marine Science Center Pier Biddeford, Maine GEI Project No. 2203703

Summary and Purpose

The University of New England (UNE) proposes to construct a new pier on the Saco River adjacent to the Girard Marine Science Center (GMSC) to support research and educational programming. The project has been in development for more than 10 years and has gone through extensive planning and alternatives analysis in arriving at the design that is proposed. In October 2023, UNE staff held a meeting with several key stakeholders including the Biddeford and Saco Harbormasters, who raised questions as to the viability of relocating the pier further toward the east, downstream from the proposed location, in a revised alignment. The purpose of this memo is to summarize the process that has been undertaken for selecting the proposed pier location and to evaluate the advantages or disadvantages of the suggested alternative location compared to the proposed design.

Planning History

UNE has undertaken multiple studies to investigate locations and configurations for the proposed GMSC pier. These studies considered factors and constraints including but not limited to proximity to campus facilities, available water depths, site exposure to currents and wave action, upland site impacts, coastal wetland and habitat impacts, impacts to harbor uses such as fishing, recreational boating, and moorings, and estimated cost of construction. The proposed pier represents the preferred balance of these factors. The past studies that resulted in this design are briefly summarized below.

In 2008-2010, UNE completed a concept planning study to investigate opportunities for construction of improved water access to support marine science programs on campus. In this study, nine alternative design concepts were developed along the UNE waterfront consisting of various configurations of piers, boat ramps, and upland access and support facilities. The concept alternatives are shown in Fig. 1. The alternatives were evaluated on a range of criteria including technical criteria, functionality, constructability, regulatory impacts, costs of construction, and others to identify a preferred facility location. At the conclusion of this study, Site 7 (directly in front of the GMSC building) was identified as the preferred location to develop a new pier facility that would consist of a pile-supported pier extending from shore out into the Saco River. This location was determined to provide the best balance of site constraints and desired functions with good access from the GMSC, ability to achieve adequate water depths to allow for all-tide berthing of the anticipated vessels, and a location of river frontage semi-sheltered from currents and wave action.

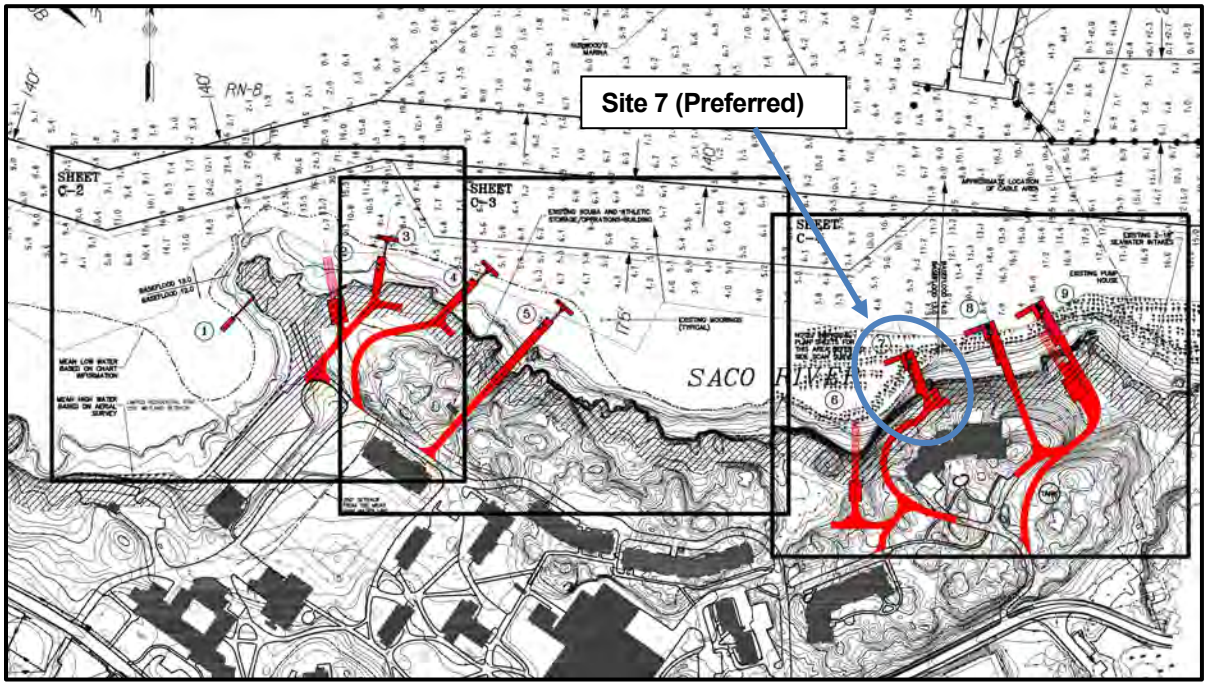

Fig. 1 – Alternative Sites Evaluated in 2008-2010 Study

After completing the pier feasibility study and identifying Site 7 as the preferred pier location, UNE undertook additional effort in 2015-2016 to study alternative pier layouts that would address the functional and vessel needs of the marine science curriculum as well as the site exposure, berthing conditions, access requirements, and associated site impacts. During this work, numerous alternative pier layouts were considered. Figs. 2 and 3 demonstrate some of the alternative layouts that were considered. This process allowed for consideration of desired pier dimensions and features, configurations of fixed structures and floating docks, pedestrian access needs, and other design criteria.

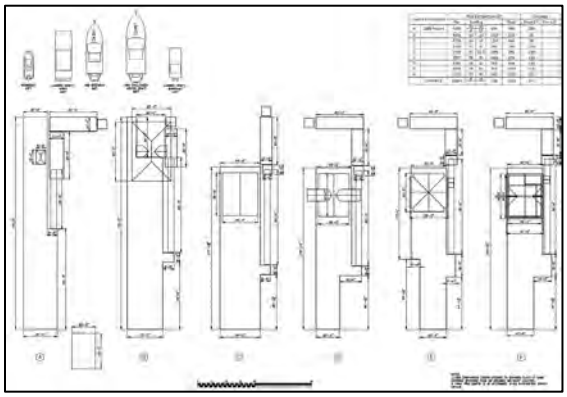

Fig. 2 – Sample of pier layout alternatives evaluated in 2015-2016 (1 of 2)

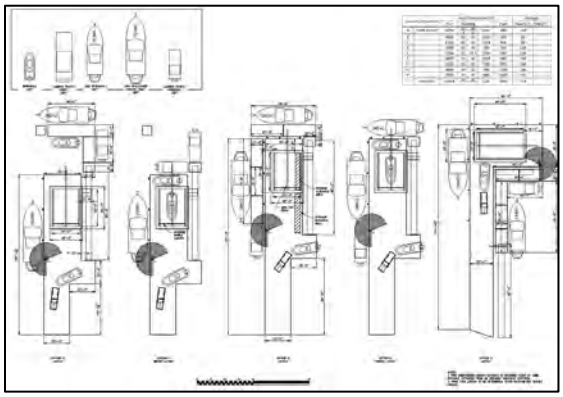

Fig. 3 – Sample of pier layout alternatives evaluated in 2015-2016 (2 of 2)

In February 2016, the proposed pier was reviewed with the with the Biddeford City Manager and key city representatives that included the Biddeford Harbormaster and Assistant Harbormaster and representatives from development staff and the Saco River Corridor Commission. Further input was gathered on river currents, recreational boating, and fishing activities resulting in the development of the three layout alternatives shown in Fig. 4 (labeled as Layout 1, Layout 2, and Layout 3). The

Harbormasters suggested that a layout with pier head oriented along the predominant direction of current such as shown in Layouts 2 and 3 would be preferable for vessels berthed at the facility. The Harbormasters also suggested that locating the pier closer to shore to minimize impacts to existing moorings and fishing activities would be preferable. These suggestions were taken into account in the next stages of design. A summary of the pier layout alternatives considered is provided in the attached memo from Baker Design Consultants dated March 22, 2016 titled "Consideration of an Alternate Pier Configuration as recommended by the City of Biddeford".

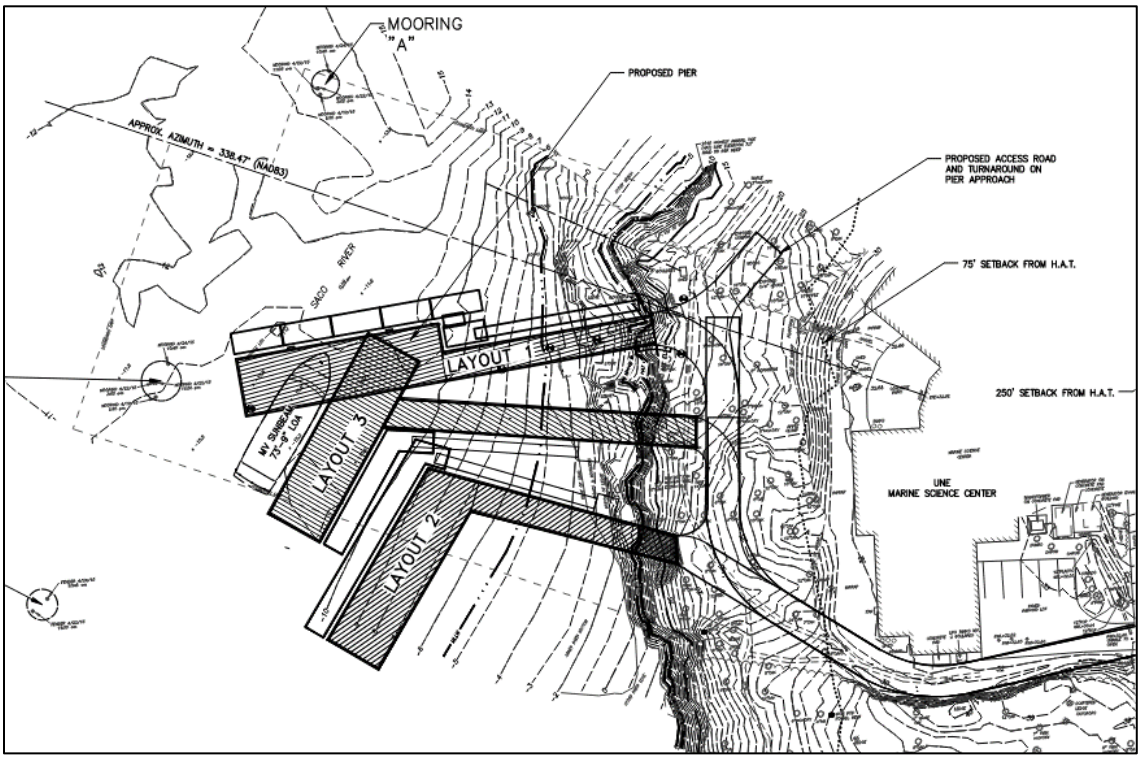

Fig. 4 – Pier layout alternatives developed in 2016 to address Harbormaster feedback

Final Design

In 2022, UNE resumed formal design development for the proposed GMSC Pier. At the start of this process, a layout was developed based on the 2016 layouts shown in Fig. 4 that reflected a combination of the pier head from Layout 3 and the pier approach from Layout 1. This new layout represented the optimal balance of site and functional constraints and upland access, with a pier head orientation that provides a main berth that is aligned with flow directions in the river, and sufficient depth to provide all-tide access for the range of vessels anticipated to use the facility.

The pier dimensions were refined through the design process to keep the structure to the minimum dimensions necessary to achieve the intended functions. This process resulted in a 22% reduction in footprint of the fixed pier, a 47% reduction in the footprint of floating docks, and a 17% reduction in the quantity of piles. Design development was advanced to 75% complete based on this design. The 75% design layout is shown in Figs. 5 and 6.



Fig. 5 – Proposed Pier Layout Vicinity Plan

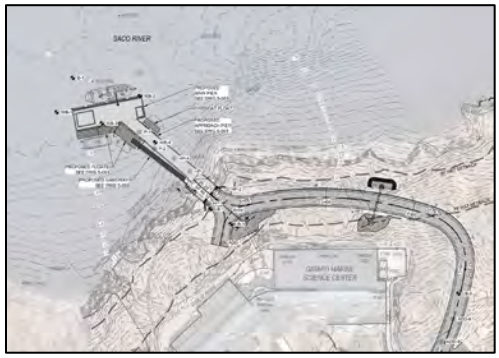

Fig. 6 – Proposed Pier Layout Site Plan

Alternative Location Analysis

In October 2023, UNE staff held a meeting to review the project with several key local stakeholders. During this meeting, the Biddeford and Saco Harbormasters suggested an alternative concept for the pier location that would relocate the pier further downstream from the proposed location as approximately shown in Fig. 7. In support of this alternative location, the Harbormasters cite deeper water, less impact to existing moorings, a location with more favorable water currents, and concerns of sediment deposition and potential need for dredging in the proposed pier location. Additionally, the Harbormasters have raised concerns about potential ice exposure given the history of icing issues at the Camp Ellis Pier directly across the River.

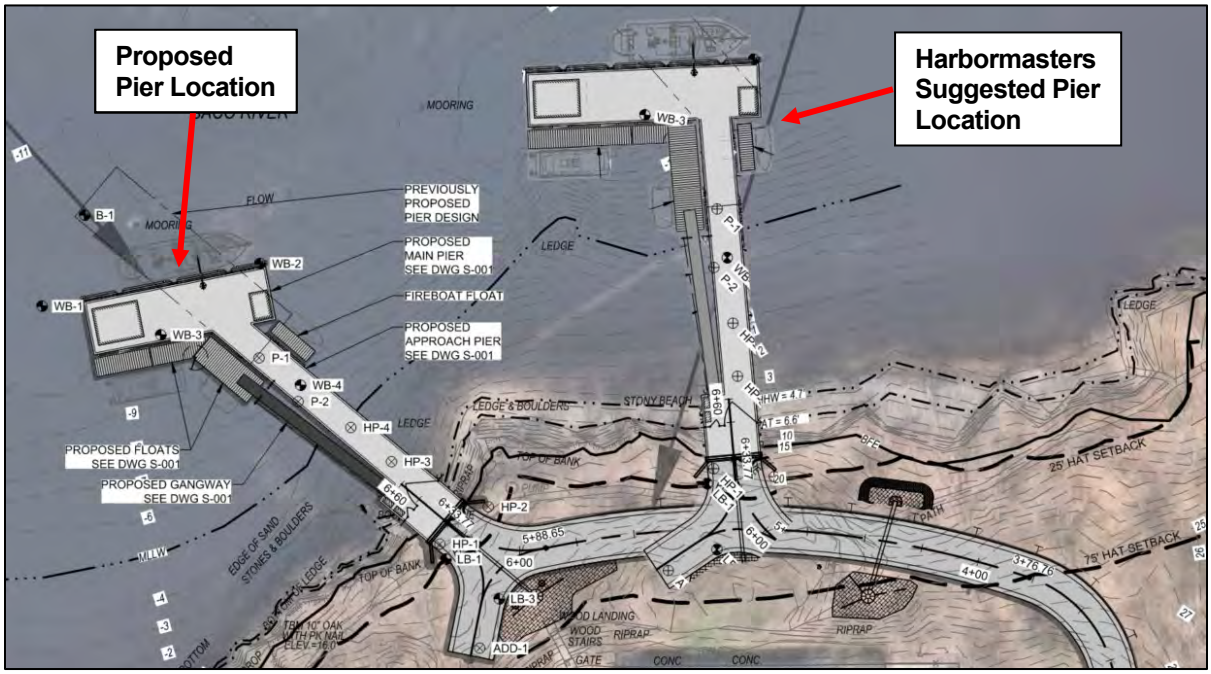

Fig. 7 – Alternative Suggested Pier Location

Review of Suggested Alternative Location

GEI has reviewed the suggested alternative layout and provided an evaluation of factors relating to the advantages and disadvantages of the proposed design versus the suggested alternative.

Water Depth

One reason for suggesting the alternative pier location is greater available water depths.

In the proposed design there is 5 to 6 feet of depth at mean lower low water (MLLW) at the main berth on the outer face of the pier which is sufficient for the proposed vessels using the facility. The suggested alternative location does have greater depth at the main berth, approximately 11 to 12 feet at MLLW. While this additional depth could allow larger vessels to use the pier, it is not needed to support the currently proposed and/or future envisioned uses.

The proposed design has 3.5 to 5 feet of depth at MLLW at the proposed floats on the inside of the pier, with sufficient distance to the MLLW line and a generally soft substrate near the floats to minimize risk of damage from vessels grounding out. In the suggested alternate location, the subtidal bottom slopes up rapidly behind the pier head. The available depth at the floats varies from 2 to 12 feet at MLLW, however the floats are in close proximity to a shallow ledge outcrop and there are concerns of hazardous conditions for vessels accessing these floats. In order to provide safe navigation to the floats the pier would need to be moved further downstream and/or extended further out into the River adding to its size, footprint, and cost.

From the standpoint of required water depths and navigational safety, the proposed design is preferred.

Exposure to Currents

The Saco River experiences currents due to tidal influence and riverine flows. To understand currents on the River, GEI has reviewed data gathered by the US Army Corps of Engineers as part of their study of erosion at Camp Ellis[1]. Figs. 8 through 11 demonstrate trends in current through differing stages of the tide. The magnitude of the current's velocity is represented by the length of the yellow arrows, with a reference arrow of 50 cm/s provided in the figures, while the current direction is indicated by the direction of the arrow. As can be seen from this data, the proposed pier location benefits from the natural shape of the shoreline which generally results in lower current velocities at the proposed location than at the downstream constriction of the River where the suggested alternate location would be located.

The lower current velocities at the proposed pier location compared to the suggested alternate result in more favorable conditions for vessels berthing at the pier, greater safety for vessels and users, and reduced structural loading on the pier. For these reasons, the proposed pier location is preferred from the standpoint of exposure to currents.

[1] Saco River and Camp Ellis Beach Section 111 Shore Damage Mitigation Study, Appendix C – Data Collection and Modeling Report, prepared by Woods Hole Group and Aubrey Consulting for the US Army Corps of Engineers, October 2006

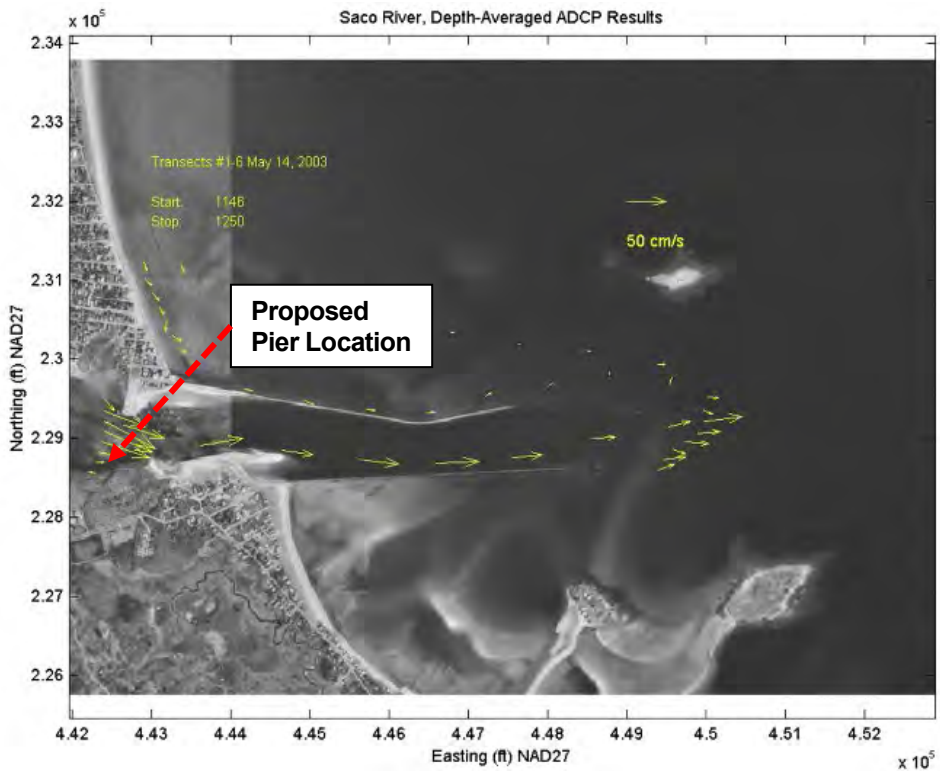

Fig. 8 – Sample of USACE Current Monitoring Data

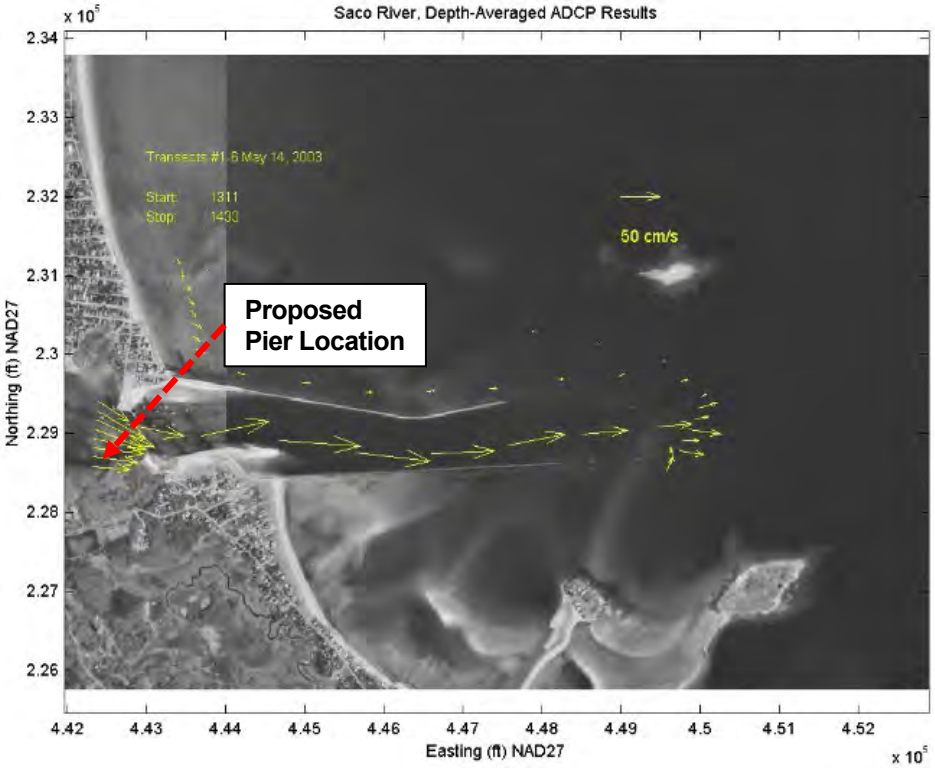

Fig. 9 – Sample of USACE Current Monitoring Data

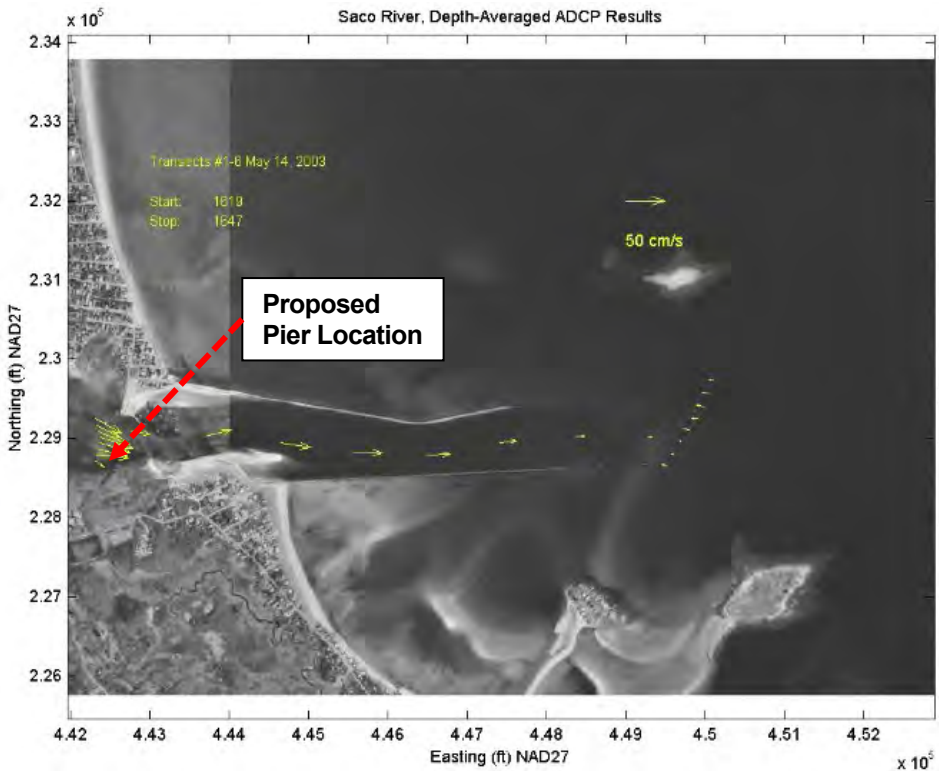

Fig. 10 – Sample of USACE Current Monitoring Data

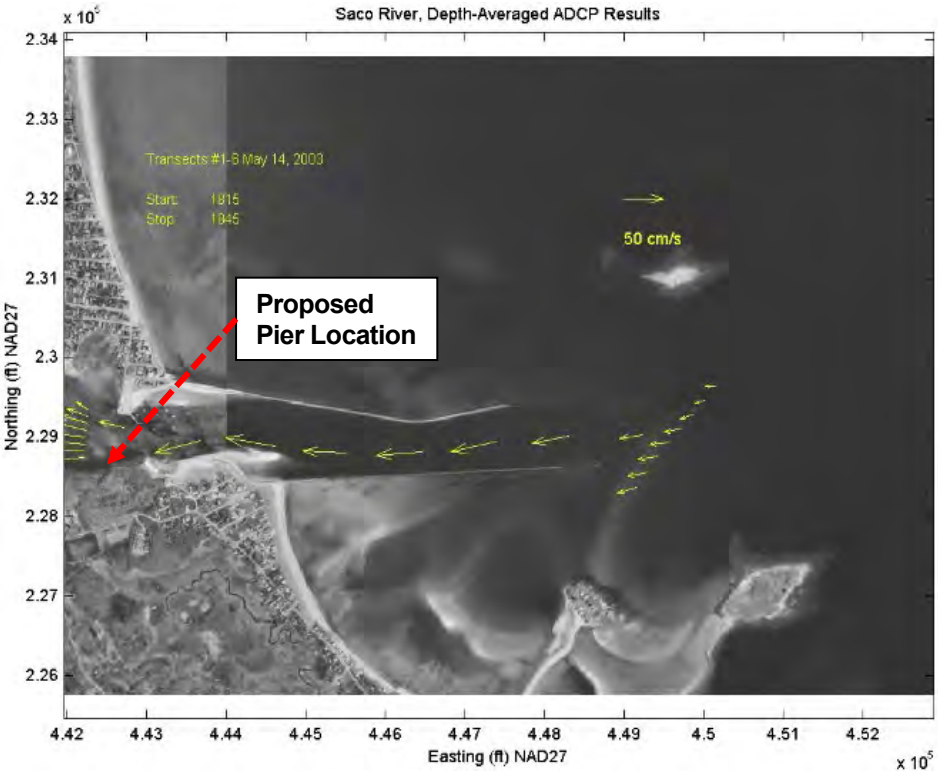

Fig. 11 – Sample of USACE Current Monitoring Data

Location Relative to River Sediment Deposition

The Harbormasters commented during the October 2023 meeting that the proposed pier location may be subject to sediment deposition that may impact pier navigation over time and require dredging in the future to restore water depths. As part of the project development, bathymetric surveys were completed in the pier area in May 2015 and again in November 2022. Fig. 9 provides an overlay of these two surveys (2022 contours are shown blue, 2015 contours are shown grey and red). In comparing these two surveys, there is negligible difference between the surveys that were taken 7.5 years apart. While there are minor differences that can be observed in contour locations and shapes, these could be attributed to the bathymetric survey accuracy and method of modeling the three-dimension surfaces used to create the contours. None of the differences are significant enough to suggest that there are large scale trends of deposition in the project area. Based upon this review, there is no indication that sediment deposition will be a substantial concern in the proposed area of the pier, and it does not appear that the suggested alternate pier location offers an advantage.

The proposed pier location does not appear to be in an area that is subject to notable sediment deposition and remains the preferred location.

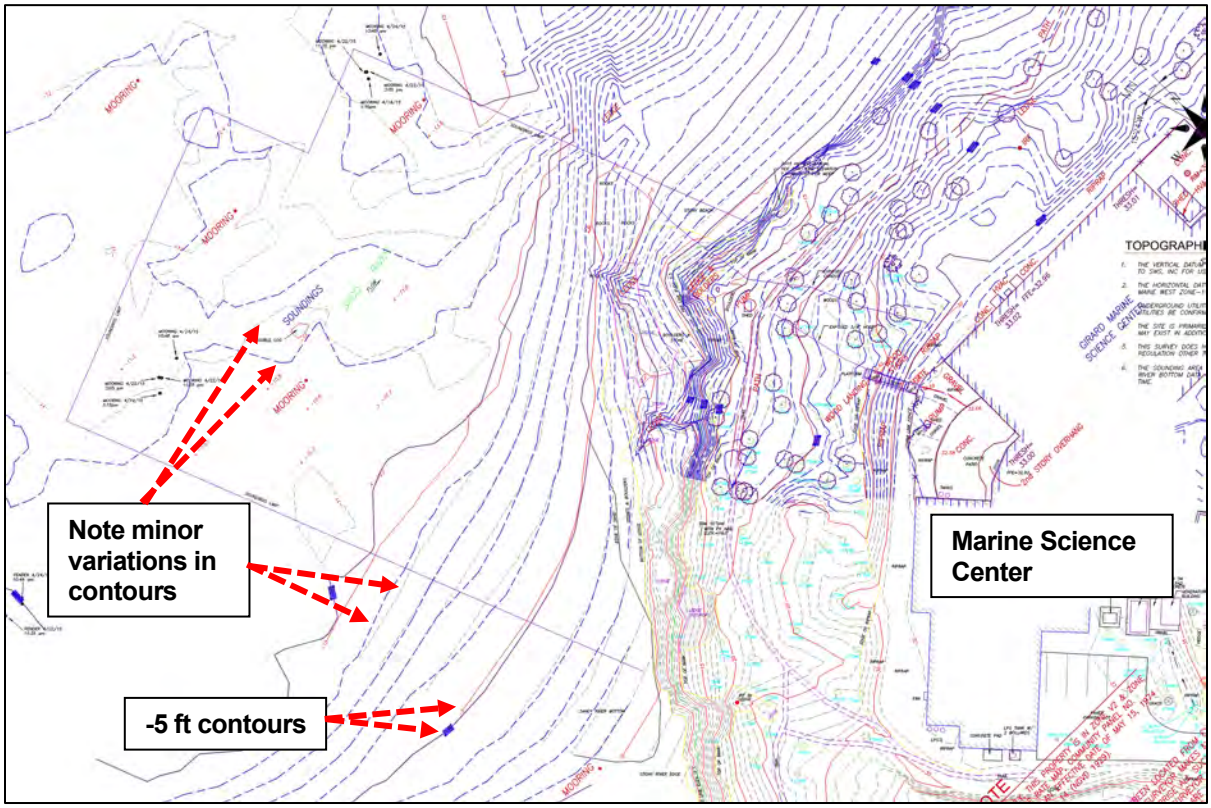

Fig. 12 – Comparison of 2022 (blue) and 2015 (grey and red) bathymetric contours

Exposure to Icing

The Harbormasters have raised concerns about exposure of the pier to winter icing. Icing on the Saco River is also a concern of UNE and the design team. The River is known to experience ice floes during the winter season that have historically been damaging to vessels at Camp Ellis. In terms of designing the fixed pier structure, the exposure to ice loading has been considered and the pile

supported pier structure will be able to sustain the forces from ice. The primary concern of the design team with winter icing is related to the impact on floating docks and berthed vessels. The ability to keep the facility in operation throughout the winter months when exposed to icing is still being evaluated by UNE. Additional steps are planned to monitor the site through winter conditions to better understand the extent of icing and potential impacts. The results of this investigation will inform the facility operations and vessel berthing plans. Methods being considered to mitigate the risks of ice impact to floats and vessels may involve the installation of additional temporary or permanent protective measures and/or limiting use of the pier during times when icing is anticipated. Irrespective of the ice protection and operational measures that may ultimately be included, the proposed pier location has less velocity exposure to icing than the suggested alternate location given its location and therefore reduced exposure. For this reason, the proposed design is preferred.

GEI has designed the fixed pier structure to resist the impact associated with river icing. Irrespective of pier location, the UNE will need to plan facility operation during periods of icing to manage risk associated with reduced facility use.

Impact to Moorings

The proposed pier layout is in close proximity to one existing known mooring which will likely need to be relocated to allow for the proposed construction. The suggested alternative is also in close proximity to one existing known mooring which would also need to be relocated if this alternative was used. Therefore, from the standpoint of mooring impacts, the proposed design and the alternative are believed to be similar.

To address anticipated impacts to moorings, GEI and UNE are prepared to work with City staff as necessary to allow for mooring adjustments to accommodate the proposed pier.

Conclusions and Closing

GEI has reviewed the concerns raised by the Saco and Biddeford Harbormasters and evaluated their impact on the proposed design, reviewed the history of planning that led to the current design location and layout, and reviewed the potential advantages and disadvantages offered by the suggested alternative pier location. While we respectfully value the input and suggestions for a layout alternative, it is our opinion that the proposed design represents the preferred balance of project requirements and site constraints. Compared to the suggested alternative, the proposed design achieves adequate water depth, provides safe navigation, results in a structure of smaller overall dimensions with less coastal wetland impact, does not appear to be subject to significant sediment deposition, and locates the pier in a location that is less exposed to current and icing impacts. For these reasons, GEI recommends that the current design and pier location be maintained.

We would be happy to discuss any elements of this memo at your convenience. Please contact Dan Bannon (dbannon@geiconsultants.com) or Barney Baker (bbaker@geiconsultants.com) with any questions.

Attachment
DJB:BJB:bdp
\\geiconsultants.com\data\Data_Storage\Working\UNIVERSITY OF NEW ENGLAND\2203703 UNE Marine Science Center Pier\11_SUBMISSIONS\2023-11-29 -Revised Memo on Suggested Alternative Location of Pier\UNE MSC Pier - MEMO_Alternative Pier Location_2023-11-28.docx

Attachment 1

2016 Pier Alternatives Memo

BAKER DESIGN CONSULTANTS
Civil, Marine and Structural Engineering

Project: **15-07 UNE Pier Layout Alternatives**

Date: March 22, 2016

To: Alan Thibeault; University of New England

Copy: Tom Saucier; Site Design Associates
Dan Bannon; Baker Design Consultants,

Subject: Consideration of an Alternate Pier Configuration as recommended by the City of Biddeford

\\BDC-SRV\PROJECTS\15\15-07 UNE MSC WATERFRONT\DESIGN\ALTERNATE PIER LOCATION STUDY\15-07 UNE PIER ALTERNATIVES MEMO MARCH 2016.DOCX

MEMO

Introduction

Baker Design Consultants (BDC) completed a pier feasibility study in 2010 study for the University. The work first defined the type of pier and parameters necessary to support the Marine Science program and then looked at the entire Saco River shoreline of the Biddeford Campus for suitable sites. Concept pier layouts for nine (9) sites were prepared and then compared in a matrix format that looked at the ability of the pier to meet the program objectives, the respective shore and waterside development challenges, the environmental impacts associated with each solution and the approximate cost and scope for construction. The pier was added to the long-term facility plan for the University.

In September 2015, BDC was retained to develop the design for a new pier at the site that had been most favorably rated in the 2010 study. Site No. 7 met the operational objectives for the pier and was located close to the Marine Science Facility pier with access to deep-water. The design has advanced through several stages of UNE MSC faculty review to define an optimum footprint and access for the pier. This was followed by site survey and geotechnical borings to verify water depths and subsurface conditions at the proposed pier location. Initial contact with the regulatory agencies has been made, but no permits applications have been filed to date. The Biddeford Harbormasters were invited to the site to review the pending (now complete) geotechnical exploration and the pier was discussed briefly at this meeting.

In February, Barney Baker and Alan Thibeault met with the City Manager and key city representatives that included the Harbormasters and representatives from development staff and the Saco River Corridor Commission. Preliminary plans for the pier were reviewed and discussed with an opportunity for staff to share comments on the proposed design. The Harbormasters were particularly keen advocates for design adjustments based on their knowledge and experience with the Harbor. All City staff was supportive of the pier and recognized the benefits it will provide to the Marine Science program at UNE.

This memo considers comments made by City staff on the current design and considers two Alternate Layouts to evaluate the changes requested. Refer to the appended drawings that show the three (3) Layouts discussed in this memo. Sheet C-1 shows the pier site in the relation to other features in the Saco River Basin.

Sheet C-1 - Saco River Basin
Sheet 1 of 4- Layout 1- Current Design
Sheet 2 of 4- Layout 2- Incorporating all City Recommendations
Sheet 3 of 4- Layout 3- Modification proposed by BDC
Sheet 4 of 4- Composite showing all 3 Layouts

Recommendations for Pier changes made by the City.

The City suggested changes to the proposed pier (Layout 1) at the February 2016 review meeting are outlined below with comments from Baker Design Consultants (BDC Response). These collectively advocate for the pier to be relocated inshore, upstream and realigned to be more parallel with the shore.

Alternate Pier configurations (Layout 2 and Layout 3) are appended. These were prepared to investigate and illustrate the changes that would be necessary to incorporate the recommended pier changes. The Table on page 4 provides a summary comparison of the proposed design (Layout 1) with the Alternate Layouts.

1. Place the pier closer to shore to minimize existing moorings impacts.

The Harbormasters were concerned that the proposed pier (Layout 1) impacted the location of several moorings and that this would create specific hardship for individual mooring holders and harbor management in general. The Harbor masters made general reference to several mooring holders, but did not have access to a plan to show where these were located.

BDC Response. Both Alternate Layouts (2 & 3) move the pier closer towards shore. Refer to tabulated mooring clearances in the Table that follows for each Layout considered.

The moorings in the pier area at the time of the April 2015 survey were put on the plan and a general search was made of google earth aerial photographs going back several years for others that might not have been in the water at the time of the field survey.

The three recorded moorings nearest the pier site are identified on the attached plans as Mooring "A", "B", and "C". For each of the pier layout alternates considered, the distance from the approximate mooring center point to the nearest point on the pier is tabulated. A clear distance in excess of 110 to 120-ft is considered an acceptable mooring clearance to the pier

2. Consider pier impacts to nearshore fishing.

The Harbormasters indicated the nearshore at the pier location was used by fishermen that use small boats to fish along the southern shore of the river from upstream to downstream. The proposed pier would require boaters to move out and around the pier and may be perceived as a barrier to the fishing activity. It was pointed out that any new pier at any waterfront location will have a similar impact on near shore navigation, but moving the pier inshore would reduce the necessary detour.

BDC Response: It is acknowledged that while the pier would influence nearshore navigation, it was well clear of the designated federal channel and boats moving around the pier would not conflict with channel traffic. The nearshore fisherman in small boats could pass under the approach section of the pier at all states of the tide in Layout No. 3 but would be restricted at low water by floats and gangway in Layouts 1 & 2.

3. Relocate pier further upstream and change orientation to reduce current exposure.

The Harbormasters confirmed that the channel restriction located just seaward of the pier created fast currents that ran parallel to shore. Based on their knowledge of the harbor, they suggested the pier would be better rotated upstream parallel to the current and moved upstream and inshore from the Layout 1 location. This would put the pier in water with less tidal current and make docking easier and safer.

BDC Response. BDC indicated they had studied a 2006 study by the Army Corps of Engineers of currents at the pier location and had already oriented the pier upstream and away from the highest tidal currents while maintaining deep water access to both sides of the pier. It is recognized that moving the pier upstream reduces the current exposure, but because the water shoals, the vessel berthing is less efficient. BDC feels strongly that dredging is a last resort because of high cost, unreliable timeframes for periodic maintenance.

Alternate Layouts 2 & 3 benefit from the local knowledge and recommendation of the Harbormasters by effectively placing the pier in calmer water with an improved docking angle to the current. However, in both alternate configurations there is a decrease in the pier face docking provided by the pier. Layout 3 also would require dredging to maintain float access. Refer to the attributes for each Layout in the Table that follows.

4. Reduce length of pier access road to reduce visual impact on shore.

This comment was made in consideration of tree cutting, vegetation removal, and regrading that would be necessary to create an access road to the pier. The road access is located within the 250' Shoreland Zone. The visual impact will be carefully reviewed by the Saco River Corridor Commission. It was suggested that the access road length to the pier could be reduced by relocating the pier upstream from the current Layout 1 location.

BDC Response. Preliminary road alignment and profiles are provided for each layout in the appended drawings and compared in the Table on page 4. In each case, the access road extends around the existing Marine Science Center building to provide equipment and vehicle access to the pier. At the pier abutment it is necessary to provide a vehicle turnaround. Options that locate the pier approach further upstream require a sloped pier approach connector in order to accommodate the steeper grades at the shore This undesirable feature is alleviated by providing a turn-around space on the Pierhead.

Alternatives Study Results summary

In summarizing the results of this Alternatives Study, the following points can be made.

- The local knowledge and insight provided by the City is both timely and helpful. The input provided both validates the Layout 1 design development to date and creates the opportunity to make small design improvements to reduce the tidal current exposure at the pier.
- Layout 2 does not work because of the steep shoreside access and the need to consider dredging in order to effectively use both sides of the pier.
- Layout 3 benefits from inside docking of small vessels, reduces access road impacts on shore with minimal concessions in water depth. However, the footprint of the pier (and cost) is increased and it is necessary to slope the connector pier to make the shore transition work. While the geotechnical fieldwork connected to date would be useful, additional geotechnical work is needed to verify subsurface conditions.

Moving forward, we recommend that Layout 3 be considered by UNE staff as a viable alternative for consensus approval with City stakeholders in advance of further design and regulatory discussion.

Please contact me with any questions.

Barney Baker, PE
Principal
JN 15-07

Table 1 – Pier Layout Alternatives Comparison

This Table below compares the proposed pier design (Layout 1) with two alternative layouts (Layouts 2 and 3) that were developed with consideration of City recommendations and key criteria that relate to size and type of impacts, facility safety and functionality that were used in the original site analysis.

	LAYOUT 1 Proposed Design	**LAYOUT 2 Alternate**	**LAYOUT 3 Alternate**
Outer face of Pier, Distance from HAT	193'	110'	152'
Orientation of Berth	40 DEG WNW	10 DEG WSW	11 DEG WSW
Setback to nearest mooring	A - 110' B - 37' C - 133'	A - 176' B - 120' C - 127'	A -121' B - 76' C - 117'
Impacted moorings	B	None	B
Setback to federal anchorage	147'	248'	204'
Water Depth Available at MLLW (no dredging)	Downstream Face – 6' Upstream Face – 5.5'	Seaward Face – 4.5' Landward Face – 1'	Seaward Face – 5.5' Landward Face – 5'
Berthing Available	Downstream Face – 100' Upstream Face – 100'	Seaward Face – 104' Landward Face* – 84' **Dredging Required*	Seaward Face – 110' Landward Face – 57'
Length of pier approach connector	100'	102'	147'
Slope of Pier Approach	No slope	1V:20H	1V:25H
Length of access road	390'	295'	330'
Access Road Gradient	*200' @ 2%* *150' @ 10%* *40' @ 0%*	*200' @ 2%* *95' @ 10%*	*200' @ 2%* *110' @ 10%* *20' @ 0%*
Length of pedestrian route from MSC building to Pier	120'	230'	170'
***Dredging Required**	No	*Yes	No
Berthed vessel alignment to currents	~40 deg	Parallel	Parallel
Pier Area	Approach – 1,400 SF Pier Head – 2,800 SF Total – 4,200 SF	Approach – 1,300 SF Pier Head – 2,800 SF Total – 4,100 SF	Approach – 2,100 SF Pier Head – 2,800 SF Total – 4,900 SF
Pier Support Conditions	Pier approach supported on shallow ledge, ability to span across transition area and support pier head on deep piles.	Pier head and majority of piles may be located in transition area with challenging geotechnical conditions. Need to confirm with additional geotechnical information.	Pier head likely located beyond transition area where the majority of piles can be driven to ledge without socketing. Need to confirm with additional geotechnical information.
Availability of geotechnical information	Geotechnical program completed	Pier is located a significant distance from any borings/probes, additional subsurface investigation required	Pier is located near the original boring/probe locations, but subsurface information will need to be supplemented with additional data.

Appendix A – Concept Plans

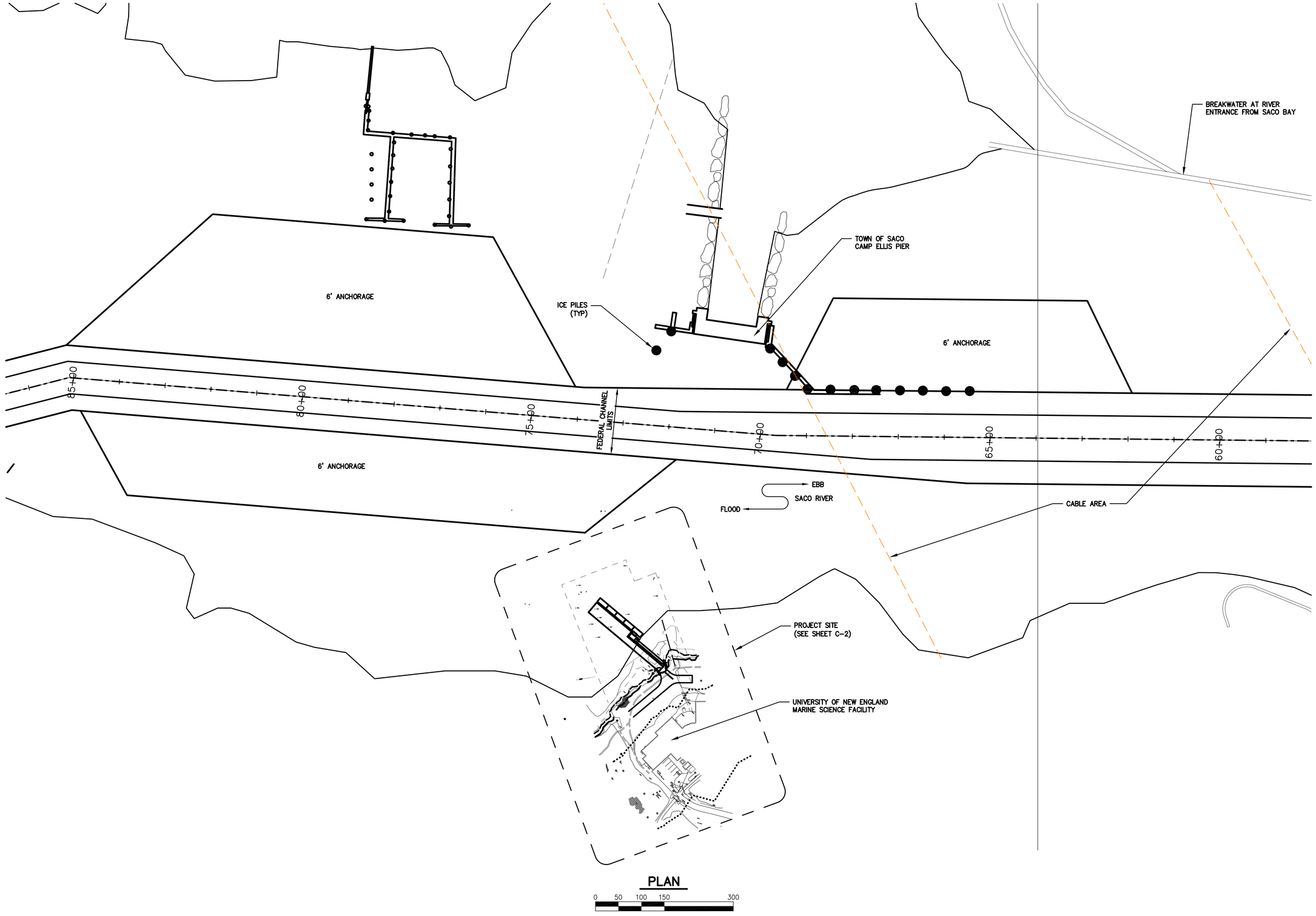

PLAN

0 50 100 150 300

\\bdc-srv\projects\15\15-07 une msc waterfront\cad\15-07 une msc waterfront civil3d (djb-nov-2015).dwg 1/25/2016

BAKER DESIGN CONSULTANTS
Civil, Marine, and Structural Engineering
7 Spruce Road • Freeport • Maine • 04032 • 207-846-9724 • info@bakerdesignconsultants.com

NO.		DATE	INT.
A	PROGRESS REVIEW SUBMISSION	6-25-15	BJB

DESIGNED BY:
DRAWN BY: JJC
CHECKED BY: BJB
SCALE: AS SHOWN

SHEET TITLE: SACO RIVER BASIN

PROJECT: UNIVERSITY OF NEW ENGLAND
UNE MSC WATERFRONT
BIDDEFORD, MAINE

DATE
FEBRUARY 2015

CONTRACT NO.
15-07

SHEET NO. C-1

REV. A

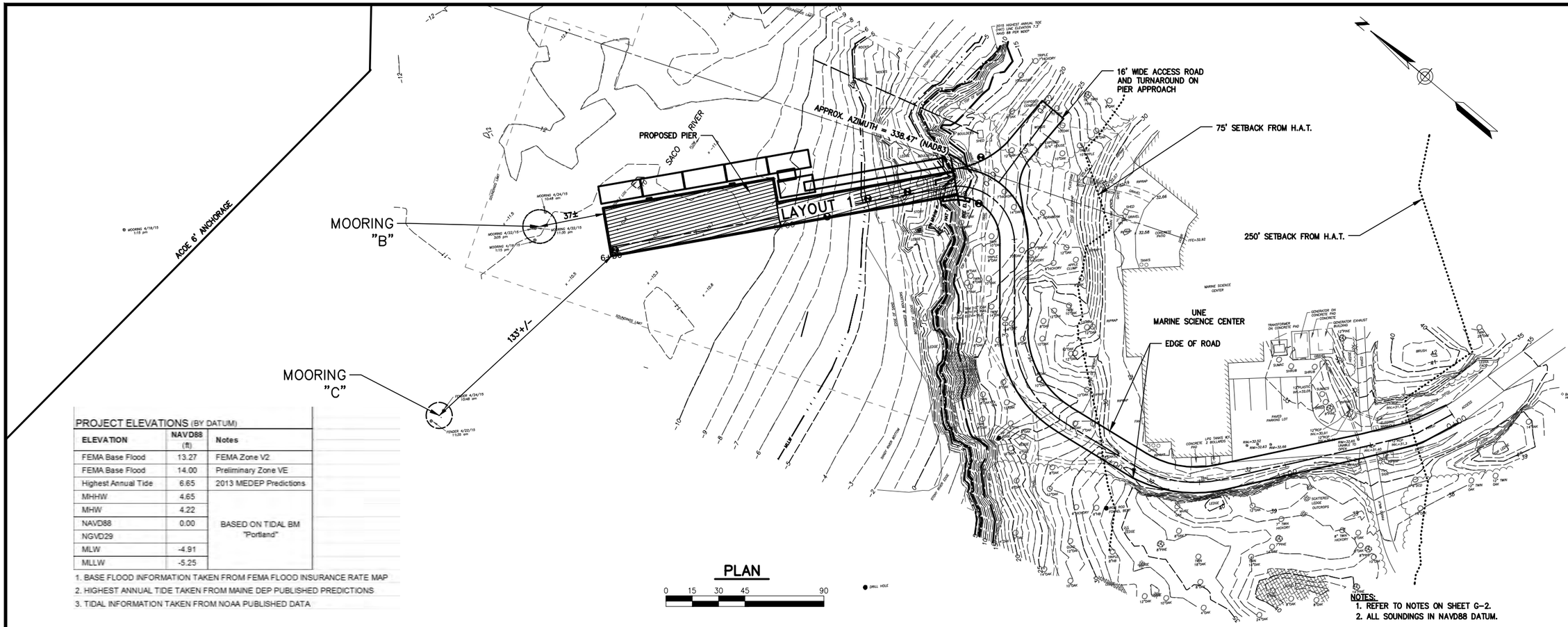

PLAN

0 15 30 45 90

PROJECT ELEVATIONS (BY DATUM)		
ELEVATION	NAVD88 (ft)	Notes
FEMA Base Flood	13.27	FEMA Zone V2
FEMA Base Flood	14.00	Preliminary Zone VE
Highest Annual Tide	6.65	2013 MEDEP Predictions
MHHW	4.65	BASED ON TIDAL BM "Portland"
MHW	4.22	
NAVD88	0.00	
NGVD29		
MLW	-4.91	
MLLW	-5.25	

1. BASE FLOOD INFORMATION TAKEN FROM FEMA FLOOD INSURANCE RATE MAP
2. HIGHEST ANNUAL TIDE TAKEN FROM MAINE DEP PUBLISHED PREDICTIONS
3. TIDAL INFORMATION TAKEN FROM NOAA PUBLISHED DATA

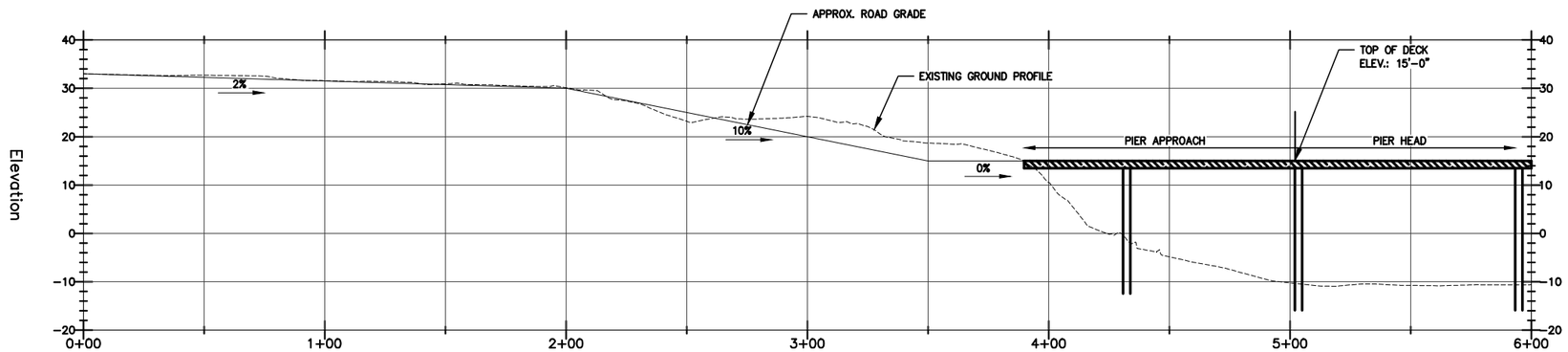

ACCESS ROAD PROFILE

0 15 30 45 90

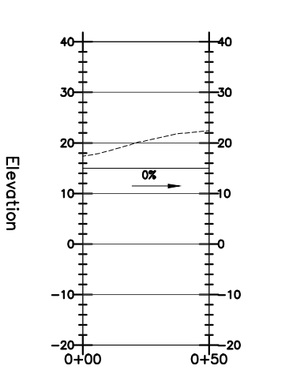

TURN AROUND PROFILE

0 15 30 45 90

BAKER DESIGN CONSULTANTS
Civil, Marine, and Structural Engineering
7 Spruce Road • Freeport • Maine • 04032 • 207-846-9724 • info@bakerdesignconsultants.com

NO.	ALTERNATIVES MEMO SUBMISSION	DATE 3-15-16	INT. BJB

STATE OF MAINE
BARNEY J. BAKER
No. 5737
LICENSED PROFESSIONAL ENGINEER

DESIGNED BY: DJB
DRAWN BY: KET
CHECKED BY: DJB
SCALE: AS SHOWN

SHEET TITLE: PIER LAYOUT 1
ACCESS ROAD PLAN AND PROFILE

PROJECT: UNIVERSITY OF NEW ENGLAND
UNE MSC WATERFRONT
BIDDEFORD, MAINE

DATE MARCH 2016
CONTRACT NO. 15-07
SHEET NO. 1 OF 4
REV. A

\\bdc-srv\projects\15\15-07 une msc waterfront\cad\15-07 une msc waterfront civil3d (alternate design review).dwg 3/22/2016

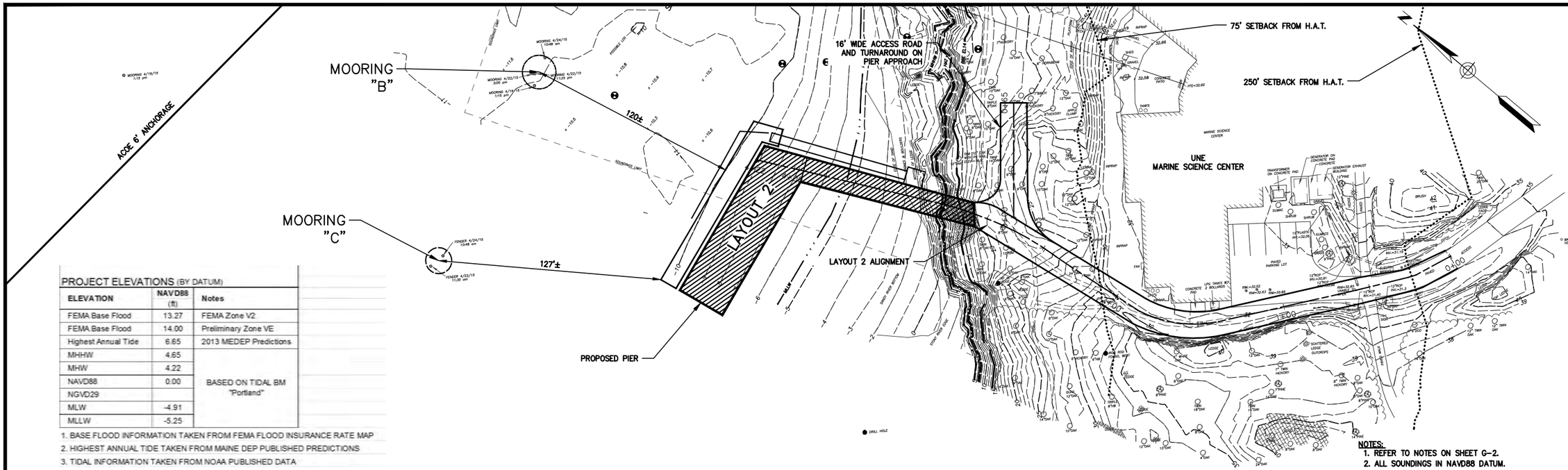

NOTES:
1. REFER TO NOTES ON SHEET G-2.
2. ALL SOUNDINGS IN NAVD88 DATUM.

PROJECT ELEVATIONS (BY DATUM)

ELEVATION	NAVD88 (ft)	Notes
FEMA Base Flood	13.27	FEMA Zone V2
FEMA Base Flood	14.00	Preliminary Zone VE
Highest Annual Tide	6.65	2013 MEDEP Predictions
MHHW	4.65	BASED ON TIDAL BM "Portland"
MHW	4.22	
NAVD88	0.00	
NGVD29		
MLW	-4.91	
MLLW	-5.25	

1. BASE FLOOD INFORMATION TAKEN FROM FEMA FLOOD INSURANCE RATE MAP
2. HIGHEST ANNUAL TIDE TAKEN FROM MAINE DEP PUBLISHED PREDICTIONS
3. TIDAL INFORMATION TAKEN FROM NOAA PUBLISHED DATA

PLAN

0 15 30 45 90

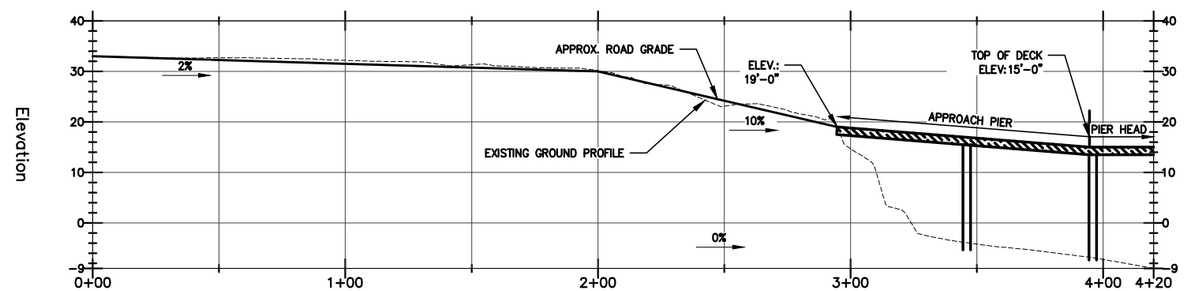

ACCESS ROAD PROFILE

0 15 30 45 90

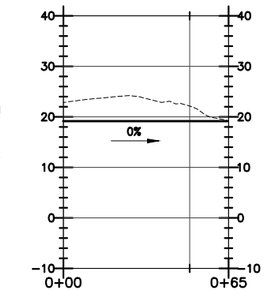

TURN AROUND PROFILE

0 15 30 45 90

BAKER DESIGN CONSULTANTS
Civil, Marine, and Structural Engineering

NO	SUBMISSION	DATE	INT
A	ALTERNATIVES MEMO	3-15-16	BJB

STATE OF MAINE
BARNEY J. BAKER
No. 5737
LICENSED
PROFESSIONAL ENGINEER

DESIGNED BY: DJB
DRAWN BY: KET
CHECKED BY: DJB
SCALE: AS SHOWN

SHEET TITLE: PIER LAYOUT 2 ACCESS ROAD PLAN AND PROFILE

PROJECT: UNIVERSITY OF NEW ENGLAND UNE MSC WATERFRONT BIDDEFORD, MAINE

DATE MARCH 2016
CONTRACT NO. 15-07
SHEET NO. 2 OF 4
REV A

\\bdc-srv\projects\15\15-07 une msc waterfront\cad\15-07 une msc waterfront civil3d (alternate design review).dwg 3/22/2016

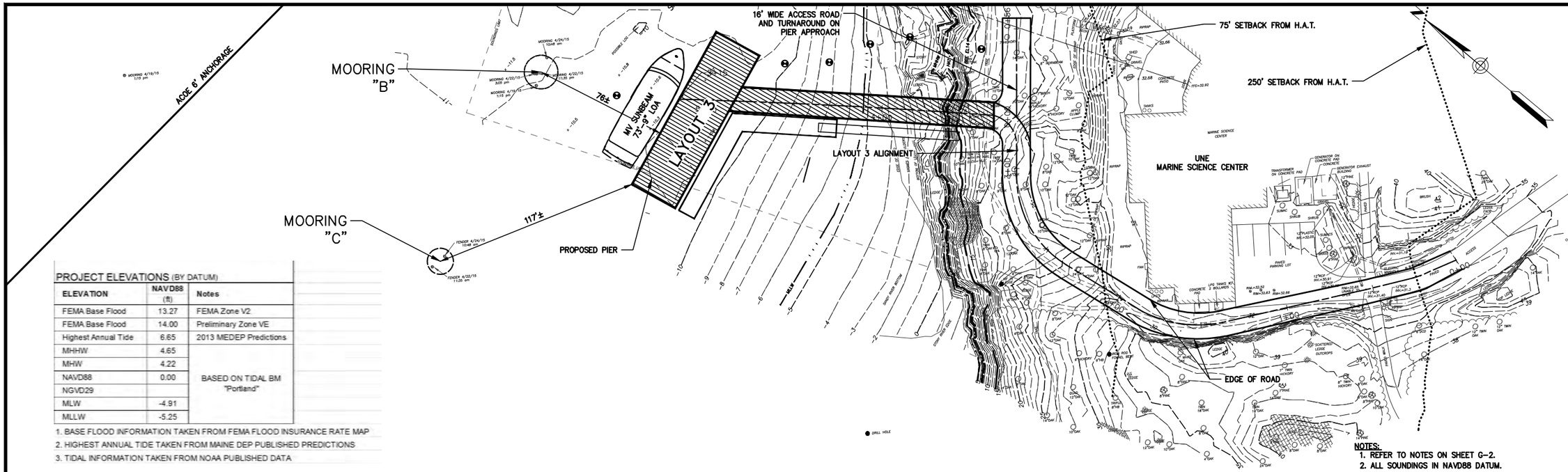

PROJECT ELEVATIONS (BY DATUM)

ELEVATION	NAVD88 (ft)	Notes
FEMA Base Flood	13.27	FEMA Zone V2
FEMA Base Flood	14.00	Preliminary Zone VE
Highest Annual Tide	6.65	2013 MEDEP Predictions
MHHW	4.65	BASED ON TIDAL BM "Portland"
MHW	4.22	
NAVD88	0.00	
NGVD29		
MLW	-4.91	
MLLW	-5.25	

1. BASE FLOOD INFORMATION TAKEN FROM FEMA FLOOD INSURANCE RATE MAP
2. HIGHEST ANNUAL TIDE TAKEN FROM MAINE DEP PUBLISHED PREDICTIONS
3. TIDAL INFORMATION TAKEN FROM NOAA PUBLISHED DATA

PLAN

0 15 30 45 90

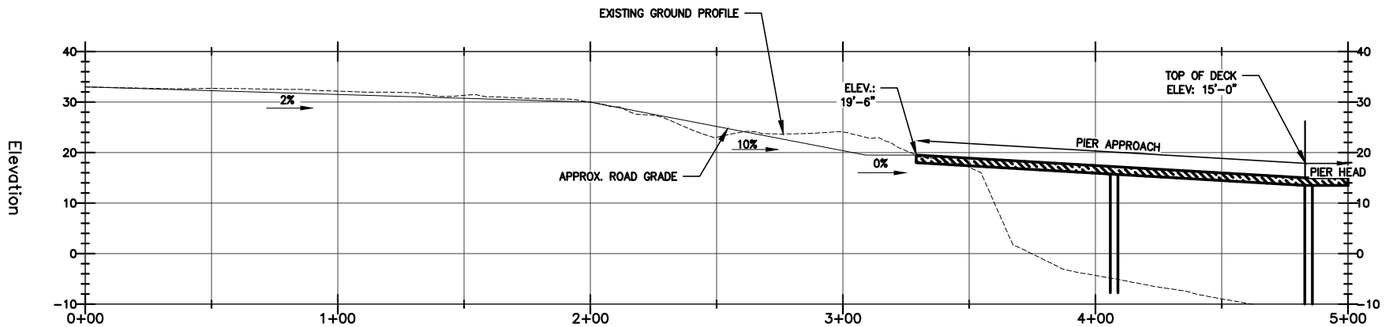

ACCESS ROAD PROFILE

0 15 30 45 90

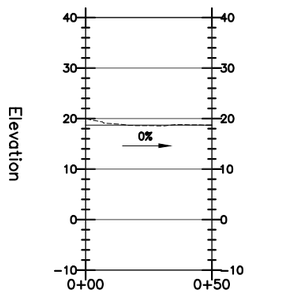

TURN AROUND PROFILE

0 15 30 45 90

BAKER DESIGN CONSULTANTS
Civil, Marine, and Structural Engineering
7 Spruce Road • Freeport • Maine • 04032 • 207-846-9724 • info@bakerdesignconsultants.com

NO.	DESCRIPTION	DATE	INT.
A	ALTERNATIVES MEMO SUBMISSION	3-15-16	BJB

STATE OF MAINE
BARNEY J. BAKER
No. 5737
LICENSED PROFESSIONAL ENGINEER

DESIGNED BY: DJB
DRAWN BY: KET
CHECKED BY: DJB
SCALE: AS SHOWN

SHEET TITLE: PIER SITE PLAN LAYOUT 3 SKETCH
PROJECT: UNIVERSITY OF NEW ENGLAND UNE MSC WATERFRONT BIDDEFORD, MAINE

DATE: MARCH 2016
CONTRACT NO.: 15-07
SHEET NO.: 3 OF 4
REV.: A

\\bdc-srv\projects\15\15-07 une msc waterfront\cad\15-07 une msc waterfront civil3d (alternate design review).dwg 3/22/2016

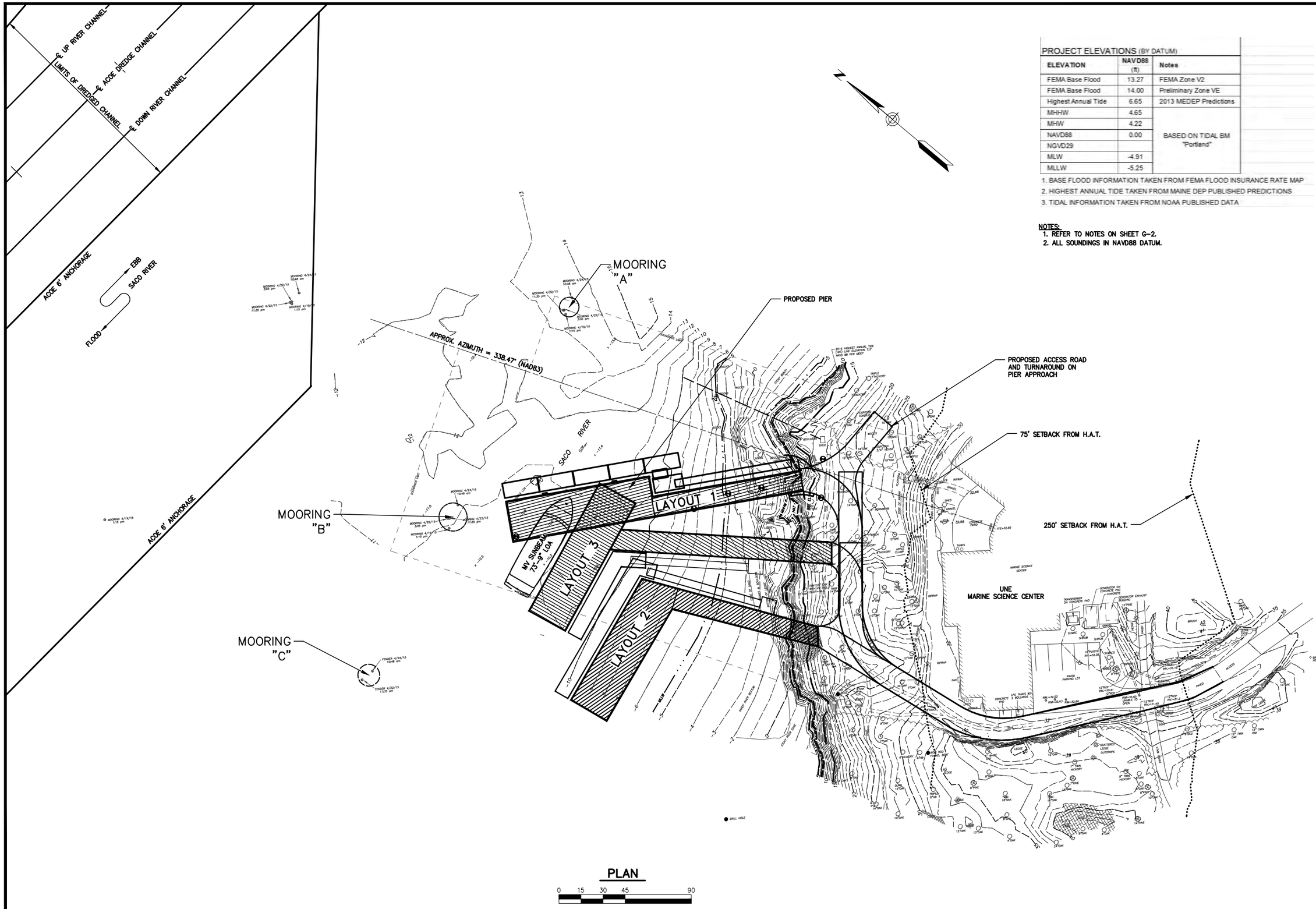

PROJECT ELEVATIONS (BY DATUM)		
ELEVATION	**NAVD88 (ft)**	**Notes**
FEMA Base Flood	13.27	FEMA Zone V2
FEMA Base Flood	14.00	Preliminary Zone VE
Highest Annual Tide	6.65	2013 MEDEP Predictions
MHHW	4.65	BASED ON TIDAL BM "Portland"
MHW	4.22	
NAVD88	0.00	
NGVD29		
MLW	-4.91	
MLLW	-5.25	

1. BASE FLOOD INFORMATION TAKEN FROM FEMA FLOOD INSURANCE RATE MAP
2. HIGHEST ANNUAL TIDE TAKEN FROM MAINE DEP PUBLISHED PREDICTIONS
3. TIDAL INFORMATION TAKEN FROM NOAA PUBLISHED DATA

NOTES:
1. REFER TO NOTES ON SHEET G-2.
2. ALL SOUNDINGS IN NAVD88 DATUM.

BAKER DESIGN CONSULTANTS
Civil, Marine, and Structural Engineering
7 Spruce Road • Freeport • Maine • 04032 • 207-846-9724 • info@bakerdesignconsultants.com

NO.		DATE	INT.
A	ALTERNATIVES MEMO SUBMISSION	3-15-16	BJB

STATE OF MAINE
BARNEY J. BAKER
No. 5737
LICENSED PROFESSIONAL ENGINEER

DESIGNED BY:	BJB	CHECKED BY:	BJB
DRAWN BY:	KET	SCALE:	AS SHOWN

SHEET TITLE: PIER SITE PLAN
ALTERNATIVES SKETCHES

PROJECT: UNIVERSITY OF NEW ENGLAND
UNE MSC WATERFRONT
BIDDEFORD, MAINE

DATE
FEBRUARY 2015

CONTRACT NO.
15-07

SHEET NO. 4 OF 4 | REV. A

\\bdc-srv\projects\15\15-07 une msc waterfront\cad\15-07 une msc waterfront civil3d (alternate design review).dwg 3/22/2016

Attachment 9
Permits

Saco River Corridor Commission
"Communities Working Together To Protect Our Rivers"

COMMISSION ORDER
IN THE MATTER OF

UNIVERSITY OF NEW ENGLAND 11 HILLS BEACH ROAD BIDDEFORD, ME 04005 PERMIT #20-491	SACO RIVER CORRIDOR ACT FINDINGS OF FACT AND ORDER

The Saco River Corridor Commission, created by the Maine State Legislature in the Saco River Corridor Act, 38 M.R.S.A. §951, et seq., (the Act), at a meeting held on August 28th, 2024, at the Porter Town Hall in Porter, Maine, and after a review of the application and supporting documents makes the following findings of fact:

PROJECT DESCRIPTION

1. The applicant is seeking a permit to construct a research pier with associated development, including a dock and float system, shed, and access road.

SITE LOCATION/DESCRIPTION

2. The property is described in the York County Registry of Deeds, Book 1484, Page 145.
3. Location: Lot 4 (Map 52) at 11 Hills Beach Road in Biddeford, Maine.
4. The 49.9-acre lot has approximately 3,500 feet of frontage on the Saco River
5. Most project activities are proposed within 250 feet of the high water line.
    a. The proposed pier, dock and float system, and shed (located on the pier) extend below the mean high water line of the Saco River.
    b. The access road begins slightly beyond the 250-foot buffer; as it turns parallel to the river, it enters the 75-foot buffer and only extends into the 25-foot buffer, where it connects to the pier at the shoreline of the Saco River. The proposed turnaround area is located outside of the 25-foot buffer.
6. The property is located in the General Development District.
7. The 100-year floodplain is limited to the immediate shoreline.

ANALYSIS

Pier Structure

8. The applicant proposes to construct a permanent vehicle-rated pier structure extending from the shore into the Saco River. The proposed pier consists of an approximately 130-foot-long approach section and an 80-foot-long pier head section oriented parallel to the flow of the river. The proposed pier consists of a concrete superstructure on 25 concrete-filled steel pipe piles (7 of which will be socketed to ledge, with the remaining 18 to be driven to ledge), with 30 untreated timber piles for vessel berthing and floating docks, and a pile-supported gangway lifting beam

which will allow the gangway to be removed from the water temporarily. All of the piles are located below the highest annual tide line.

9. The direct impact from all piles totals 84 square feet, while the indirect impact below the highest annual tide line from the pier footprint is 3,579 square feet.
10. A concrete abutment connecting the pier to the access road is located above the highest annual tide line.

Floating Dock System & Gangway

11. The proposed floating dock system consists of one 8 x 24-foot float, one 8 x 26-foot, 10-inch float, and one 12 x 30-foot gangway landing float to provide all-tide vessel access on the west side of the pier. A 6 x 20-foot floating dock (relocated from an existing upstream location on the property) is also proposed to provide a tie-up location for the City of Biddeford Fire Boat on the east side of the pier.
12. The applicant additionally proposes an 80 x 5-foot gangway on the west side of the pier to provide ADA-compliant access to the float system.
13. All floating docks are located below the mean lower low water line and are proposed to be restrained and guided by the timber piles. The proposal will allow vessels to tie up to the pier during all tide levels.
14. The floating dock system has a total indirect impact of 848 square feet, and the gangway has a total indirect impact of 357 square feet.

Pier Buildings

15. An 8 x 10-foot shed is proposed on the east side of the pier head to provide storage for small equipment and to house utility features (electric panels).

Access Drive

16. The applicant proposes to construct a 16-foot-wide paved access road with 2-foot-wide paved shoulders extending from the road near the Marine Science Center around the east side of the Marine Science Center to the proposed pier, as well as associated grading, drainage, and stormwater management features.
17. A turnaround is proposed adjacent to the pier to allow vehicles, including fire trucks, to redirect and exit via the access road.
18. The applicant reports that vehicles will use the existing parking spaces adjacent to the Marine Science Center and that no parking is proposed adjacent to the pier.
19. The applicant states that the proposed access road will provide construction access for the project and allow more staging to take place on land, minimizing impacts to the water.
20. They report that upland work includes stormwater management features that have been designed to meet Maine DEP Chapter 500 standards.

Summary of Statement of Necessity

21. The proposed pier will provide students and researchers year-round access to the river and ocean, including a "living laboratory" located on Ram Island in Saco Bay, which is currently inaccessible during the winter and spring when the seasonal dock and float system aren't in use. The applicant states that the pier will facilitate research activities and scientific and practical exchanges with local, regional, and national marine researchers and industry partners. They note

that the marine research afforded by the proposed year-round access will allow UNE to gather data to guide Maine's response to climate change and inform data-driven decisions impacting aquaculture, fisheries, marine law and policy, and related fields.

General Background

22. The applicant reports that the area where the pier will be located is ledge, with adjacent areas consisting of undeveloped sparsely wooded areas and coastal wetlands.
23. The applicant addressed the §959-A.(A-K) standards in the project description. Where applicable, the staff has added additional details gathered from site plans. In summary:
    a. Degradation of Air and Water Quality – no anticipated impacts.
        i. Vegetation swales and two bioretention filtration ponding areas are proposed along the access road as part of the stormwater management plans.
    b. Harmful Alteration of Wetlands – no anticipated significant impacts (84 square feet of direct impact as noted above in Item 9.)
    c. Increase in Erosion and Sedimentation –
        i. The soils in the project area are not highly erodible, and the pier is located over exposed ledge and ledge with overburden.
        ii. All construction and site alterations will be done in accordance with Maine Erosion and Sedimentation Control Best Management Practices, and the site will be permanently stabilized following completion of construction.
        iii. Site plans note that the siltation boom will be installed for the duration of the construction process.
    d. Danger of Increased Flood Damage –
        i. The structure has been designed to withstand flood impacts, and its elevation takes into account rising sea levels.
    e. Obstruction of Flood Flow – no significant impacts
    f. Damage to Fish and Wildlife Habitat – no significant impacts
    g. Despoliation of Scenic Rural, and Open Space Character of the Corridor –
        i. The project's limit of disturbance encompasses 0.92 acres, with vegetation removal taking place in that envelope to provide a cleared area for the access drive and stormwater facilities.
        ii. 44 trees, including stumps, are proposed for removal within the project area.
        iii. 10 to 25 feet of clearing is proposed on average along either side of the access road. Clearing in several areas is greater to accommodate stormwater structures.
        iv. The remaining open space will be maintained, natural surroundings will be preserved, and scenic views from neighboring properties will not be obstructed.
        v. Given the water-dependent nature of the project, it will be visible from the river.
    h. Overcrowding – no significant impacts
    i. Excessive noise – no significant impacts
    j. Obstruction to Navigation –
        i. The structures will be no closer than 208 feet from the Army Corps of Engineers anchorage area.
        ii. Site plans note that construction activities will not impact the federal navigation channel at any time.

k. Interference with Educational, Scenic, Scientific, Historic, or Archaeological Values of the Areas Designated and Approved for Inclusion within the Resource Protection District
    i. The project is not located in the Resource Protection District, and the applicant states that it will enhance the area's educational value.

24. At the August 14th, 2024, Rules Committee meeting, the Committee expressed concerns about the diminution of the vegetated buffer as a result of the proposed access road construction. They noted that the removal of vegetation in that area could increase the visual impact of the existing Marine Science Center and of the access road itself. The Committee suggested that, if possible (depending on site conditions), the applicant should propose additional plantings between the access road and the shoreline.
25. In response to the Rules Committee comments:
    a. The applicant's agent submitted an updated vegetation plan, which reduced the number of trees proposed for removal by five trees, most of which were in the 25-foot buffer. The updated vegetation plan also clarified the number of trees 8 inches in diameter and greater within the 25-foot buffer that would remain post-construction.
    b. The applicant's agent stated that it was not possible to reduce the width of the access drive to less than the currently proposed 20 feet due to the National Fire Protection Association codes.
    c. The applicant's agent submitted the Stormwater Inspection and Maintenance plans for the project, which will include routine inspections of the systems post-construction to ensure proper function.
26. Staff notes from the August 23rd, 2024, site visit state:
    a. The area has many smaller shrubby vegetation. Numerous large trees are also present, and they are proposed for removal.
    b. A cleared opening would be created between the River and the Marine Science Center.
    c. The proposed clearing (for the road) extends no closer than 25 feet from the mean high water line. However, little vegetation would remain in some areas.
27. At the August 28th, 2024, Commission meeting:
    a. Public comments were heard and considered for impacts on the Commission's standards.
    b. The applicant presented an updated revegetation plan using native plantings for a 1:1 replacement ratio.
    c. The Commission questioned the status of other agencies' review of the project.
        i. The applicant's agent stated that the US Fish and Wildlife Service had advised that the work window be limited to November to April.
    d. The applicant's representatives estimated that the finished pier, including railings, would be approximately 26 feet above the water at low tide.
    e. The applicant's agent clarified that the previously proposed classroom on the pier head had been removed from the proposal.

RELEVANT STANDARDS OF THE ACT

§957-A. Resource Protection District | §957-C. General Development District | §959-A. Requirements for granting permits | §962. General Performance Standards | Chapter 102: Standard Conditions of Approval | Chapter 103: Standards to Address the Environmental Factors

BASED ON THE ABOVE FINDINGS, as determined at a duly noticed Commission Meeting, the Commission draws the following conclusions:

1. The applicant has shown the proposed design to be within the meaning of the Act.
2. The proposed use will not unreasonably involve any of the factors enumerated in §959-A(1)(A)-(K) of the Act.

THEREFORE, the Commission APPROVES the application of the University of New England, #20-491, for a permit to construct a research pier with associated development on the property owned by them, provided the activity is carried out according to the application and UPON THE FOLLOWING CONDITIONS:

1. Standard Conditions of Approval (copy attached).
2. All in-water portions of the existing research pier shall be removed.

This decision, including any of its conditions, may be appealed pursuant to 38 M.R.S. §968, except that no appeal pursuant to 38 M.R.S. §968 shall be taken from a decision of the Commission which decision was made without a public hearing until a request for reconsideration has been submitted to the Commission, and the Commission has made a final determination in the matter. Any person wishing to file an appeal or to request reconsideration must do so within 30 days of the Commission's written decision and order. Requests for reconsideration must be submitted in accordance with applicable Commission regulations. To be valid, all permits must meet all federal, state, and local ordinances and regulations.

DONE AND DATED AT CORNISH, MAINE, THIS 13TH DAY OF SEPTEMBER 2024.

SACO RIVER CORRIDOR COMMISSION

BY: Ben Pinault 9/13/24

Benjamin Pinault, Chairperson — Dated



Registry of Deeds Notarization Form
Saco River Corridor Commission Permit #20-491 University of New England

Acknowledgment

State of Maine
County of York

This record was acknowledged before me on this 13th day of September 2024 by Benjamin Pinault.

Haley L. Lachance
Signature of Notary Public

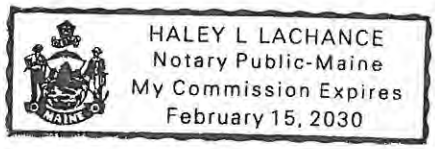

Haley Lachance
Notary Public, State of Maine
My commission expires: February 15, 2030

STATE OF MAINE
DEPARTMENT OF ENVIRONMENTAL PROTECTION
17 STATE HOUSE STATION AUGUSTA, MAINE 04333-0017

DEPARTMENT ORDER

IN THE MATTER OF

UNIVERSITY OF NEW ENGLAND	) NATURAL RESOURCES PROTECTION ACT
Biddeford, York County	) COASTAL WETLAND ALTERATION
COMMERCIAL PIER SYSTEM	) WATER QUALITY CERTIFICATION
L-18314-4P-BE-N (approval)	) FINDINGS OF FACT AND ORDER

Pursuant to the provisions of 38 M.R.S. §§ 480-A–480-JJ, Section 401 of the Clean Water Act (33 U.S.C. § 1341), and Chapters 310, 315, and 335 of Department rules, the Department of Environmental Protection (Department) has considered the application of UNIVERSITY OF NEW ENGLAND (applicant) with the supportive data, agency review comments, public comments, and other related materials on file and FINDS THE FOLLOWING FACTS:

1. PROJECT DESCRIPTION:

A. History of Project: In Department Order #L-18314-22-A-N, dated April 12, 1993, the Department granted after-the-fact approval to the University of New England for an expansion of the main campus. In Department Order #L-18314-22/31-J-M, dated December 19, 1996, the Department approved the construction of athletic facilities, a service road, a pier system, and seasonal floating dock on the Saco River. In Department Order #L-18314-22-L-A, dated May 31, 2000, the Department approved the construction of the Marine Science and Research Center and included a modification to the pier and floating dock. In Department Order #L-18314-22-AY-M/L-18314-4P-AZ-M, dated July 13, 2017, the Department approved the addition of two six-foot wide by 16-foot long seasonal floats attached seaward and perpendicular to the existing permanent floats oriented parallel to shore. A second, seasonal pier system was installed on Jordan Point in 2016. In Department Order #L-18314-22-BC-M/4P-BD-N, dated December 7, 2023, the Department approved the replacement of the second seasonal pier with a permanent pier system consisting of a six-foot wide by 63-foot long fixed pier, an existing four-foot wide by 48-foot long seasonal aluminum gangway, and an existing 10-foot long by 60-foot wide seasonal float system. The completed project resulted in 16 square feet of direct impacts and 1732 square feet of indirect impacts to the coastal wetland.

B. Summary: The applicant proposes to construct a new commercial size pier to provide all-tide access for the Marine Science Center and dock space for the City of Biddeford fireboat used for public safety. The proposed permanent pier structure will be built in three sections: section one consist of a 23-foot wide by 30-foot deck with a security gate, that connects to the second 14-foot wide by 100-foot long pier structure that seaward into the river, and the third pier section a 23-foot wide an 80-foot long pier head that will be oriented parallel to shore and a five-foot wide by 80-foot long permanent gangway perpendicular to the shore. The pier head and gangway will be flanked by four permanent floats running end to end parallel to shore; an 8-foot wide by

24-foot long float an 8-foot wide by 27-foot long float, a 12-foot wide by 30-foot long gangway landing float to provide all-tide access on the west side of the pier and a six-foot wide by 20-foot float to provide a tie-up location for the City of Biddeford's Fire Boat on the east side of the pier, both perpendicular to the shore. The pier system will be supported by 25 concrete-filled steel pipe piles and a concrete abutment which connects the pier to the proposed access road. The project as proposed will result in 84 square feet of direct impacts to the coastal wetland due to pilings, and 3,579 square feet of indirect impacts to the coastal wetland due to shading from the pier, ramp, and floats. The large size of the pier and gangway will accommodate an outdoor covered classroom, ADA-compliant access and fireboat tiedown float, and vehicular access to the pier for transportation of research and emergency equipment. Between this proposed pier and the currently existing pier system, cumulative direct impacts to the coastal wetland will total 100 square feet, and cumulative indirect impacts to the coastal wetland will total 5,311 square feet.

In addition to the proposed pier system, an upland access road connecting the existing road to the proposed pier will be constructed, including associated site grading, drainage, and stormwater management features. Work on the access road will result in approximately 475 square feet of impacts adjacent to the coastal wetland. Upland work proposed will not exceed 40,000 square feet of additional disturbed area and thus is exempt from permitting pursuant to M.R.S 38 §488(27)(A).

The proposed project is shown on a set of plans, the first of which is titled "University of New England Marine Science Center Pier", completed by GEI Consultants, Inc. and dated April 22, 2024. The project site is located at 11 Hills Beach Road in the Town of Biddeford.

C. Current Use of the Site: The project site is located on an approximately 50-acre parcel of land that is developed with various university buildings and a permanent pier system. The parcel is identified as Lot 4 on Map 52 of the City of Biddeford's tax maps.

D. Public Interest: The Department received emails from one individual between September 4 and December 11, 2024. The interested person expressed concerns related to the Town's project review process. Additionally, the interested person stated that the applicant did not consider alternative locations for the pier that would be less impactful to the resource. After reviewing the application, the Department determined that the applicant provided a sufficient alternative analysis which is further discussed in Section 4.

The interested person submitted a public hearing request on July 1, 2024. The request was reviewed by the Department and a response sent on August 20, 2024, citing that the application did not meet the Chapter 2 criteria for the Board to hold a hearing.

2. EXISTING SCENIC, AESTHETIC, RECREATIONAL OR NAVIGATIONAL USES:

The Natural Resources Protection Act (NRPA), in 38 M.R.S. § 480-D(1), requires the applicant to demonstrate that the proposed project will not unreasonably interfere with existing scenic, aesthetic, recreational and navigational uses.

In accordance with Chapter 315, *Assessing and Mitigating Impacts to Scenic and Aesthetic Uses* (06-096 C.M.R. ch. 315, effective June 29, 2003), the applicant submitted a copy of the Department's Visual Evaluation Field Survey Checklist as Appendix A to the application along with a description of the property and the proposed project. The applicant also submitted several photographs of the proposed project site and surroundings including an aerial photograph of the project site.

The proposed project is located in the Saco River, which is a scenic resource visited by the general public, in part, for the use, observation, enjoyment and appreciation of its natural and cultural visual qualities. Given the piers on abutting properties and the existing pier on the same parcel, the proposed pier will not substantially alter the visual aesthetic of the riverbank from the river. The proposed pier system is of similar size, scale, and design as nearby pier systems, including a commercial marina with slips located directly across the river and visible from the project site.

The Department staff utilized the Department's Visual Impact Assessment Matrix in its evaluation of the proposed project and the Matrix showed an acceptable potential visual impact rating for the proposed project. Based on the information submitted in the application and the visual impact rating, the Department determined that the location and scale of the proposed activity is compatible with the existing visual quality and landscape characteristics found within the viewshed of the scenic resource in the project area.

The Department of Marine Resources (DMR) reviewed the project and stated that the proposed project should not cause any significant adverse impact to navigation or recreation based on the nature of the project and its location.

The Department finds that the proposed activity will not unreasonably interfere with existing scenic, aesthetic, recreational or navigational uses of the river.

3. SOIL EROSION:

The NRPA, in 38 M.R.S. § 480-D(2), requires the applicant to demonstrate that the proposed project will not cause unreasonable erosion of soil or sediment nor unreasonably inhibit the natural transfer of soil from the terrestrial to the marine or freshwater environment.

Construction will take place from the upland and by barge. Access by land will occur on existing roads, and the proposed new road will be started early in construction to provide an additional route for construction access, material deliveries, and staging. When the site is being accessed by barge, the contractor will avoid the nearby federal navigation

channel and adjacent waterfront facilities during construction activity. Any work within the resource will be conducted in compliance with the standard November 8th-April 9th in-water work window discussed in Finding 4. A certified erosion control contractor will be on site.

The Department finds that the activity will not cause unreasonable erosion of soil or sediment nor unreasonably inhibit the natural transfer of soil from the terrestrial to the marine or freshwater environment.

4. HABITAT CONSIDERATIONS:

The NRPA, in 38 M.R.S. § 480-D(3), requires the applicant to demonstrate that the proposed project will not unreasonably harm significant wildlife habitat, freshwater wetland plant habitat, threatened or endangered plant habitat, aquatic or adjacent upland habitat, travel corridor, freshwater, estuarine or marine fisheries or other aquatic life.

The project site consists of ledge in the upper intertidal, grading to rockweed-covered rocky shore then to mixed coarse and fine sediments. Eelgrass resources were documented in the subtidal near the project area prior to 1997 but have not been mapped in recent years.

In its review, the Department of Marine Resources (DMR) stated that the project as proposed would have direct impacts to marine resources and habitat in the footprint of the pier, and recommended that if piles are driven outside of the winter work window of November 8th-April 9th. The mouth of the Saco River is utilized by diadromous fish species including Atlantic Salmon, alewife, and sea run brook trout. Atlantic and short nose sturgeon may be present year round in this area.. DMR further recommended that the applicant use a vibratory hammer or a bubble screen for noise mitigation.

The applicant concurred that work will only occur during the winter work window.

According to the Department's Geographic Information System (GIS) database there are no mapped Essential or Significant Wildlife Habitats located at the site. The Maine Department of Inland Fisheries and Wildlife (MDIFW) reviewed the proposed project and stated that the project is located adjacent to but outside of Tidal Waterfowl and Wading Bird Habitat (TWWH), a designated Significant Wildlife Habitat. MDIFW stated that minimal impacts to piping plover and Blanding's turtle habitat are anticipated and provided general recommendations including minimizing vegetation removal and soil disturbance, and that time spent in the water should be minimized to the greatest extent practicable.

The applicant responded to these comments, and agreed to minimize vegetation removal, soil disturbance, and time spent in the water.

The Department finds that the activity will not unreasonably harm any significant wildlife habitat, freshwater wetland plant habitat, threatened or endangered plant habitat, aquatic

or adjacent upland habitat, travel corridor, freshwater, estuarine or marine fisheries or other aquatic life provided in-water work is only conducted between November 8th-April 9th of any given year

5. WATER QUALITY CONSIDERATIONS:

The applicant proposes to use lumber treated with chromated copper arsenate (CCA) to construct the pier. To protect water quality, all CCA-treated lumber must be cured on dry land in a manner that exposes all surfaces to the air for 21 days prior to the start of construction.

Provided that CCA-treated lumber is cured as described above, the Department finds that the proposed project will not violate any state water quality law, including those governing the classification of the State's waters.

6. WETLANDS AND WATERBODIES PROTECTION RULES:

The proposed project will result in 84 square feet of direct impacts and 4,784 square feet of indirect impacts to the coastal wetland from the new pier system. The overall cumulative impacts from the existing pier and proposed project will be 100 square feet of direct impacts to the coastal resource and 5,311 square feet of indirect impacts to the coastal resource. Coastal wetlands are wetlands of special significance.

The *Wetlands and Waterbodies Protection Rules*, 06-096 C.M.R. ch. 310 (last amended November 11, 2018), interpret and elaborate on the Natural Resources Protection Act (NRPA) criteria for obtaining a permit. The rules guide the Department in its determination of whether a project's impacts would be unreasonable. A proposed project would generally be found to be unreasonable if it would cause a loss in wetland area, functions and values and there is a practicable alternative to the project that would be less damaging to the environment. Each application for a NRPA permit that involves a coastal wetland alteration must provide an analysis of alternatives in order to demonstrate that a practicable alternative does not exist.

A. Avoidance. An applicant must submit an analysis of whether there is a practicable alternative to the project that would be less damaging to the environment and this analysis is considered by the Department in its assessment of the reasonableness of any impacts. Additionally, for activities proposed in, on, or over wetlands of special significance the activity must be among the types listed in Chapter 310, § 5(A) or a practicable alternative less damaging to the environment is considered to exist and the impact is unreasonable. A pier is a water dependent use and its proposed construction is among the activities specifically provided for in Chapter 310, § 5(A)(1)(c). Additionally, any project related to health and safety is among the activities specifically provided for in Chapter 310, § 5(A)(1)(a).

The applicant submitted an alternatives analysis for the proposed project completed by Site Design Associates and dated June 17, 2024, with a last revision date of December

10, 2024. The purpose of the proposed project is to provide all-tide, year-round access to the resource for research and education operations associated with the Arthur P. Girard Marine Science Center (GMSC) at the University of New England. A secondary project purpose is to provide docking space for the City of Biddeford's fireboat for emergency response and safety. The applicant plans to launch a variety of research vessels from the proposed pier, including a 31-foot long research vessel and potentially larger ones in the future. The City's fireboat is 19 feet long. The applicant considered not building the new pier system and instead utilizing the existing pier on the parcel; however, this existing pier is seasonal, including the floats that are hauled out of the water each winter limiting year-round access that is required to support the a Universities' marine science programs. Additionally, the existing pier does not provide a docking area for the City of Biddeford's fireboat. Therefore, this alternative was rejected. The applicant considered a seasonal gangway and l floats; however, research and access to the water is required for emergency response from the City and for year-round, all-tide access to the resource for educational purposes. Finally, the applicant considered using public facilities including marinas, boat launches and moorings to moor and launch research vessels; however, access to the water can be time-sensitive due to course schedules or the need to access the water during certain tide cycles. With shuttling of staff, students, and equipment, and the lack of reliable parking, this alternative was rejected. The private marinas in the area have long waitlists for private slips and do not have the capacity to handle the frequent use and group size that the University requires to meet their education and research mission

B. Minimal Alteration. In support of an application and to address the analysis of the reasonableness of any impacts of a proposed project, an applicant must demonstrate that the amount of coastal wetland to be altered will be kept to the minimum amount necessary for meeting the overall purpose of the project. During the planning phase of this project, the applicant selected the pier location with the shortest length necessary to reach adequate water depths for all -tide access. In addition, the dimensions of the pier head were reduced from 28-feet wide by 100-feet long to the currently proposed 23-feet wide by 80-feet long to reduce impacts to the coastal resource.

C. Compensation. In accordance with Chapter 310, § 5(C)(6)(b), compensation may be required to achieve the goal of no net loss of coastal wetland functions and values. This project will not result in over 500 square feet of fill in the resource, which is the threshold over which compensation is generally required. Further, the proposed project will not have an adverse impact on marine resources or wildlife habitat as determined by DMR and MDIFW. For these reasons, the Department determined that compensation is not required.

The Department finds that the applicant has avoided and minimized coastal wetland impacts to the greatest extent practicable, and that the proposed project represents the least environmentally damaging alternative that meets the overall purpose of the project.

7. OTHER CONSIDERATIONS:

The Department finds, based on the design, proposed construction methods, and location, the proposed project will not inhibit the natural transfer of soil from the terrestrial to the marine environment, will not interfere with the natural flow of any surface or subsurface waters, and will not cause or increase flooding. The proposed project is not located in a coastal sand dune system, is not a crossing of an outstanding river segment, and does not involve dredge spoils disposal or the transport of dredge spoils by water.

BASED on the above findings of fact, and subject to the conditions listed below, the Department makes the following conclusions pursuant to 38 M.R.S. §§ 480-A–480-JJ and Section 401 of the Clean Water Act (33 U.S.C. § 1341):

A. The proposed activity will not unreasonably interfere with existing scenic, aesthetic, recreational, or navigational uses.

B. The proposed activity will not cause unreasonable erosion of soil or sediment.

C. The proposed activity will not unreasonably inhibit the natural transfer of soil from the terrestrial to the marine or freshwater environment.

D. The proposed activity will not unreasonably harm any significant wildlife habitat, freshwater wetland plant habitat, threatened or endangered plant habitat, aquatic or adjacent upland habitat, travel corridor, freshwater, estuarine, or marine fisheries or other aquatic life provided winter work windows are utilized as described in Finding 3.

E. The proposed activity will not unreasonably interfere with the natural flow of any surface or subsurface waters.

F. The proposed activity will not violate any state water quality law including those governing the classifications of the State's waters provided that CCA-treated lumber is cured as described in Finding 5.

G. The proposed activity will not unreasonably cause or increase the flooding of the alteration area or adjacent properties.

H. The proposed activity is not on or adjacent to a sand dune.

I. The proposed activity is not on an outstanding river segment as noted in 38 M.R.S. § 480-P.

THEREFORE, the Department APPROVES the above noted application of UNIVERSITY OF NEW ENGLAND to construct a research pier as described in Finding 1, SUBJECT TO THE ATTACHED CONDITIONS, and all applicable standards and regulations:

1. Standard Conditions of Approval, a copy attached.

2. The applicant shall take all necessary measures to ensure that their activities or those of their agents do not result in measurable erosion of soil on the site during the construction of the project covered by this approval.

3. Severability. The invalidity or unenforceability of any provision, or part thereof, of this License shall not affect the remainder of the provision or any other provisions. This License shall be construed and enforced in all respects as if such invalid or unenforceable provision or part thereof had been omitted.

4. Construction is only allowed from November 8th-April 9th of any given year.

5. All CCA-treated lumber shall be cured on dry land in a manner that exposes all surfaces to the air for 21 days prior to the start of construction.

THIS APPROVAL DOES NOT CONSTITUTE OR SUBSTITUTE FOR ANY OTHER REQUIRED STATE, FEDERAL OR LOCAL APPROVALS NOR DOES IT VERIFY COMPLIANCE WITH ANY APPLICABLE SHORELAND ZONING ORDINANCES.

DONE AND DATED IN AUGUSTA, MAINE, THIS 11TH DAY OF APRIL, 2025.

DEPARTMENT OF ENVIRONMENTAL PROTECTION

BY:_____
For: Melanie Loyzim, Commissioner

PLEASE NOTE THE ATTACHED SHEET FOR GUIDANCE ON APPEAL PROCEDURES.

PCS/L18314BEN/ATS#92653

DEPARTMENT OF THE ARMY
U.S. ARMY CORPS OF ENGINEERS, NEW ENGLAND DISTRICT
NEW ENGLAND DISTRICT OFFICE
696 VIRGINIA ROAD
CONCORD MASSACHUSETTS 01742-2751

March 28, 2025

Regulatory Division

Andrew Phillippe
University of New England
11 Hills Beach Road
Biddeford, Maine 04005
Via Email: aphilippe@une.edu

Dear Mr. Phillippe:

This letter is in response to the application you submitted to the U.S. Army Corps of Engineers (USACE), New England District on June 21, 2024 for a Department of the Army general permit verification. We have assigned this project file number NAE-2024-01628, which you should reference in all correspondence with this office.

A review of the information provided indicates the proposed work includes the construction of a permanent pier consisting of a 28-foot long by 24-foot-wide landing; a 90-foot long by 14-foot-wide approach pier; and an 80-foot long by 24-foot-long pier. Additionally, your project includes a floating dock system consisting of an 80-foot long by 5-foot-wide gangway; a 30-foot long by 12-foot wide float; a 24-foot long by 8-foot wide float; and a 27-foot long by 8-foot wide float, and a 20-foot long by 6-foot wide float. The project is located in the Saco River; at 11 Hills Beach Road, at Latitude 43.458630º and Longitude -70.389050º; in Biddeford, York County, Maine. The work is shown on the enclosed plans titled “University of New England Marine Science Center Pier”, on 38 sheets, and dated 8/14/2024.

Based on the information you have provided; we verify that the activity is authorized under General Permit *2. Structures, Floats, and Lifts* of the October 14, 2020, federal permit known as the Maine General Permits (GPs). If the extent of the project area and/or nature of the authorized impacts to waters are modified, a revised application must be submitted to this office for written approval before work is initiated. You can find a copy of these permits at:
https://www.nae.usace.army.mil/Missions/Regulatory/State-General-Permits/

Any deviation from the terms and conditions of the permit, or your submitted plans, may subject the permittee to the enforcement provisions of our regulations. Therefore, in the event changes to this project are contemplated, it is recommended you coordinate with this office prior to proceeding with the work. This office must approve any changes before you undertake them. You must perform this work in compliance

with the terms and conditions of the GPs listed above, and also in compliance with the following special conditions:

1. The permittee shall complete and return the enclosed Work-Start Notification Form to this office at least two weeks prior to the anticipated construction start date.

2. The permittee shall complete and return the enclosed Completion Certification Form to this office at least one month following the completion of the authorized work.

3. You must maintain the activity herein in good condition and in conformance with the terms and conditions of this authorization. You are not relieved of this requirement if you abandon the permitted activity, although you may make a good faith transfer to a third party in compliance with a general condition of these GPs. Should you wish to cease to maintain the authorized activities, or should you desire to abandon it without a good faith transfer, you must obtain a modification of this authorization from this office, which may require restoration of the area.

4. All construction shall be completed in accordance with the limits of construction and construction sequences detailed on the enclosed plan drawings, titled “University of New England Marine Science Center Pier,” on a total of 38 sheets, and dated 8/14/2024. If you change the plans or construction methods for work within or adjacent to the Saco River, please contact us immediately to discuss modification of this authorization. The USACE must approve any changes before you undertake them.

5. A “soft start” is required to allow animals an opportunity to leave the project vicinity before sound pressure levels increase. In addition to using a soft start at the beginning of the workday for pile driving, one must also be used at any time following cessation of pile driving for a period of 30 minutes or longer.

a) For impact pile driving: Pile driving will commence with an initial set of three strikes by the hammer at 40% energy, followed by a one-minute wait period, then two subsequent 3-strike sets at 40% energy, with one-minute waiting periods, before initiating continuous impact driving.

b) For vibratory pile installation: Pile driving will be initiated for 15 seconds at reduced energy followed by a one-minute waiting period. This sequence of 15 seconds of reduced energy driving, one-minute waiting period will be repeated two additional times, followed immediately by pile-driving at full rate and energy.

6. The work authorized herein shall not be conducted during the time of year (TOY) restriction of April 10 to November 7 in order to minimize adverse impacts to the Atlantic sturgeon, shortnose sturgeon.

This verification is valid until October 14, 2025. You must commence or be under contract to commence the work authorized herein by October 14, 2025 and complete

the work by October 14, 2026. If not, you must contact this office to determine the need for further authorization before beginning or continuing the activity. It is recommended that you contact this office before this authorization expires to discuss if permit reissuance is a possibility.

This GP verification and any associated authorizations does not preclude the necessity to obtain any other federal, state, or local permits, licenses, and/or certifications, which may be required.

If you have any questions related to this verification or have issues accessing documents referenced in this letter, please contact Jana Jacobson, Project Manager at (207) 233-2117, or by email at Jana.L.Jacobson@usace.army.mil. This agency continually strives to improve our customer service. To better serve you, please complete the Customer Service Survey located at: https://regulatory.ops.usace.army.mil/customer-service-survey/.

Sincerely,

Jon T. Coleman
Team Leader
Technical Regional Execution Center
North Atlantic Division

Enclosures

Cc (w/enclosures):
Tom Saucier, Site Design Associates (via tsaucier@sitedesignassociates.biz)

Attachment 10
MHPC Clearance

MAINE HISTORIC PRESERVATION COMMISSION
55 CAPITOL STREET
65 STATE HOUSE STATION
AUGUSTA, MAINE
04333

JANET T. MILLS
GOVERNOR

KIRK F. MOHNEY
DIRECTOR

May 15, 2023

Mr. Tom Saucier, P.E.
Site Design Associates
23 Whitney Way
Topsham, Maine 04086

Project: MHPC# 0500-23 University of New England; 11 Hills Beach Road
Permanent Pier and Float System

Town: Biddeford, ME

Dear Mr. Saucier:

In response to your recent request, I have reviewed the information received April 13, 2023 to initiate consultation on the above referenced projects in accordance with Section 106 of the National Historic Preservation Act of 1966, as amended (NHPA).

Dr. Arthur Spiess of my staff has carefully reviewed our February 7, 2000 letter concerning areas of archaeological site significance on the UNE campus, and the Phase III report that formed the background of these recommendations. We note that some of the areas of the proposed access road and the head of the pier fall outside of the areas found not to be contributing to the overall significance of the archaeological site(s) on the UNE campus (specifically areas 99.1, 99.2 and 99.8. Moreover, the intensity of previous archaeological testing along the now-proposed access road (especially within area 99.1).

Based on the information submitted, I have concluded that the proposed work will have **no adverse effect** upon historic properties.

However, our finding is *conditional* upon the following:

1) We recommend that one or more archaeologists monitor the initial clearing of soil from the route of the access road and be allowed enough time to recover information from any subsoil features that are present. It would be most important to monitor the access road from the curve in the road to be located just east of the north wall of the marine science center to the head of the proposed pier.

Please contact Megan M. Rideout at (207) 287-2992 or megan.m.rideout@maine.gov if we can be of further assistance in this matter.

Sincerely,

Kirk F. Mohney

Kirk F. Mohney
State Historic Preservation Officer

PHONE: (207) 287-2132 FAX: (207) 287-2335

Attachment 11
Notice to Proceed
With External Reviews

City of Biddeford, Maine

The Office of
City Manager
James A. Bennett
Email: james.bennett@biddefordmaine.org

August 19, 2024

University of New England
11 Hills Beach Road
Biddeford, Maine 04005

Attention: Mr. Alan Thibeault, VP of University Operations

RE: Notice to Proceed with External Reviews

Dear Mr. Thibeault,

On August 9, 2024, I received written clarification from Mr. Wayne Duffett, PE of TECAssociates that UNE's proposed Research Pier and Float System has complied with City Code 74-35 subsections (c) 1-10. Those sections are as follows:

(1) A formal boundary survey that has been documented at the Registry of Deeds.
(2) A copy of the boundary survey showing the littoral zone, established by extending property lines seaward.
(3) A location map from a portion of a USGS topographic map or coastal chart.
(4) Distance to navigable channels or any federal navigation project.
(5) Mean high- and low-water boundary.
(6) A plan view on the drawing(s) that shows the location and dimensions of the applicant's structure(s) in relation to the applicant's property lines.
(7) A typical cross section/side view of the applicant's structures on the drawing(s).
(8) Evidence that owners of abutting properties have been notified of the applicant's intended project.
(9) Evidence that the 1) Maine Historic Preservation Commission, 2) Aroostook Band of Micmac, 3) Passamaquoddy Tribe of Indians: Pleasant Point; Indian Township, 4) Houlton Band of Maliseet Indians, and 5) Penobscot Indian Nation have been notified of the applicant's intended project.
(10) Completed applications to the Army Corps of Engineers, Department of Environmental Protection and Biddeford Code Enforcement. A regulatory permit from the Saco River Corridor Commission may also be required in some instances.

Based on this information and in harmony with my earlier communications, please consider this as formal notification from the City of Biddeford that the application has been found in compliance with

the above mention City Code. That finding allows the application to proceed in the next steps of the review process; namely formal review by all agencies except those that are part of the City of Biddeford. After each and all of those processes are complete, the City will move forward with the final review(s) by agents and Committees of the City.

While I don't believe it is necessary, let me empathically state that this communication does not in any form, imply that the City has in any way made a determination that the location submitted has been approved. Said approval will considered after completion of all process and in compliance with applicable laws, regulations. This includes all local ordinances.

Please feel free to reach out to me if you have any questions

Sincerely,

James A. Bennett
City Manager

CC: Biddeford Mayor and City Council

Attachment 12
Photo of shed



Attachment 13
Light Fixture Information

BEACON
design . performance . technology

URBAN SERIES
URBAN LUMINAIRE

DATE: | LOCATION:

TYPE: | PROJECT:

CATALOG #:

FEATURES

- Decorative transitional style lighting fixture series is suitable for walkway lighting and wall mounting
- Two unique shade and style options
- LED turtle-friendly option available
- Integral Surge and Thermal Protection


Shown with arm

C US

*3000K and warmer CCTs only

CONTROL TECHNOLOGY

energeni

SPECIFICATIONS

CONSTRUCTION
- The drivers shall be located in the top cast housing and shall be accessible without tools by hinging the lower shade assembly. The driver and all electrical components shall be on a tray
- The lower shade shall be made from a one-piece aluminum spinning
- The housing is designed for LED thermal management without the use of metallic screens, cages, or fans. The top casting shall be able to be pendent mounted in place with a stainless steel safety pin and then permanently held in place with four stainless steel bolts

ELECTRICAL
- 100V through 277V, 50 Hz to 60 Hz (UNV), or 347V or 480V input
- Power factor is ≥0.90 at full load
- Dimming drivers are standard with connections for external dimming equipment available upon request
- Component-to-component wiring within the luminaire may carry no more than 80% of rated load and is listed by UL for use at 600VAC at 50°C or higher
- Plug disconnects are listed by UL for use at 600 VAC, 13A or higher. 13A rating applies to primary (AC) side only
- Fixture electrical compartment shall contain all LED driver components
- Button photocell available
- Ambient operating temperature -40°C to 40°C

ELECTRICAL (CONTINUED)
- Surge protection - 20KA
- Lifeshield™ Circuit - protects luminaire from excessive temperature. The device shall activate at a specific, factory-preset temperature, and progressively reduce power over a finite temperature range. A luminaire equipped with the device may be reliably operated in any ambient temperature up to 55°C (131°F). Operation shall be smooth and undetectable to the eye. Thermal circuit is designed to “fail on”, allowing the luminaire to revert to full power in the event of an interruption of its power supply, or faulty wiring connection to the drivers. The device shall be able to co-exist with other 0-10V control devices (occupancy sensors, external dimmers, etc.)

CONTROLS
- Available with Energeni for optional set dimming, timed dimming with simple delay, or timed dimming based on time of night visit

FINISH
- IFS polyester powder-coat electrostatically applied and thermocured
- IFS finish consists of a five stage pretreatment regimen with a polymer primer sealer and top coated with a thermoset super TGIC polyester powder coat finish
- The finish meets the AAMA 605.2 performance specification which includes passing a 3000 hour salt spray test for corrosion resistance and resists cracking or loss of adhesion per ASTM D522 and resists surface impacts of up to 160 inch-pounds

CERTIFICATIONS
- NRTL Certified, UL8750, UL 1598 and CSA22.2#250. 13-14 for wet locations
- IDA approved
- This product is approved by the Florida Fish and Wildlife Conservation Commission. Separate spec available.

WARRANTY
- 5 year warranty

KEY DATA	
Lumen Range	3,300–13,000
Wattage Range	27.8–137.5
Efficacy Range (LPW)	61–87

© 2024 Current Lighting Solutions, LLC. All rights reserved. Information and specifications subject to change without notice. All values are design or typical values when measured under laboratory conditions.

BEACON
design . performance . technology

DATE: LOCATION:

TYPE: PROJECT:

CATALOG #:

URBAN SERIES
URBAN LUMINAIRE

ORDERING GUIDE

Example: URB–CAP-21–36L-120–5K7–UNV–4–NRNW–BLT

CATALOG #

Model	Lens Option	Engine–Watts	CCT/CRI[4]	Voltage	Optics[2]	Electrical Options
URB Urban	**CAP-21** 21" Capitol	**18L-25** 25W, LED array	**3K7** 3000K, 70 CRI	**UNV** 120-277V	**FR** Type I	**PCU** Button Photocell, Universal
	MRDS-21 21" Miramar deep shade	**18L-39** 39W, LED array	**4K7** 4000K, 70 CRI	**347** 347V	**2** Type II	
	MAR-21 21" Maritas	**18L-50** 50W, LED array	**5K7** 5000K, 70 CRI	**480** 480V	**3** Type III	
	CAP-26 26" Capitol	**18L-70** 70W, LED array	**3K8** 3000K, 80 CRI		**4F** Type IV forward	
	MRSS-26 26" Miramar shallow shade	**18L-90** 90W, LED array	**4K8** 4000K, 80 CRI		**4W** Type IV wide	
	MRDS-26 26" Miramar deep shade	**18L-110** 110W, LED array	**5K8** 5000K, 80 CRI		**5QN** Type V square narrow	
	MAR-26 26" Maritas	**36L-120** 120W, LED array	**AM** Monochromatic Amber, 595nm		**5QW** Type V square wide	
		36L-135 135W, LED array			**5RW** Type V rectangular wide	
		36L-155 155W, LED array			**5W** Type V round wide	
		36L-175 175W, LED array			**BC** Backshield (available for FR, 2, 3, 4, 4W Opctics)	

Control Options	Mounting Style	Style	Finish	Options
GENI-XX Energeni[3]	**PM** Pendant mount	**NRNW** No rings	**BLT** Black Matte Textured	**BC** Backlight Control
XX - Please specify	**SM** Side mount	**3RNW** Three rings	**BLS** Black Gloss Smooth	
	YM3 Yoke mount, 3" OD		**DBT** Dark Bronze Matte Textured	
	YM4 Yoke mount, 4" OD		**DBS** Dark Bronze Gloss Smooth	
	YM5 Yoke mount, 5" OD		**GTT** Graphite Matte Textured	
			LGS Light Grey Gloss Smooth	
			PSS Platinum Silver Smooth	
			WHT White Matte Textured	
			WHS White Gloss Smooth	
			VGT Verde Green Textured	
			Color Option	
			CC Custom Color	

Notes:
1 26" only
2 To rotate optics left or right 90 degrees, specify L or R after the optical distribution example: 4L
3 When ordering Energeni, specify the routine setting code (Example GENI-04). See Energeni brochure and Energeni instructions for setting table and options. Not available with sensor options
4 This product is approved by the Florida Fish and Wildlife Conservation Commission. Separate spec available on our website.

© 2024 Current Lighting Solutions, LLC. All rights reserved. Information and specifications subject to change without notice. All values are design or typical values when measured under laboratory conditions.

BEACON
design . performance . technology

URBAN SERIES

URBAN LUMINAIRE

PENDANT MOUNT



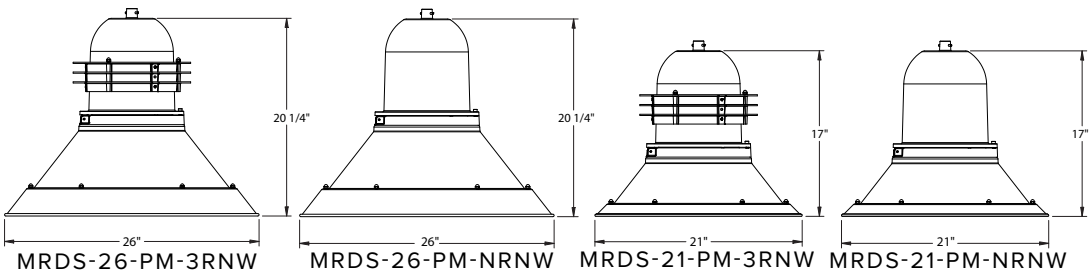

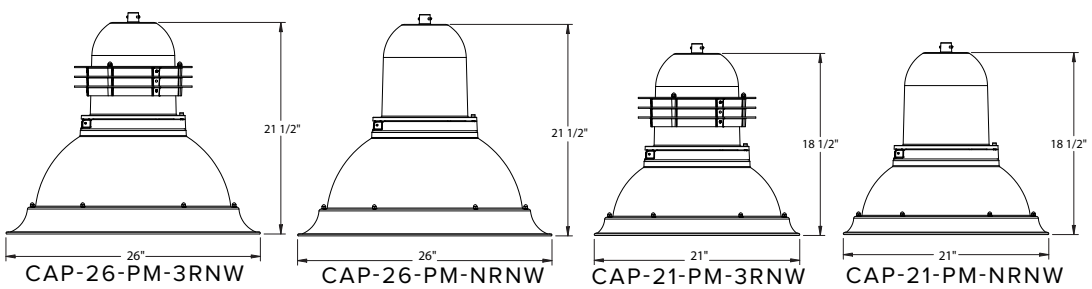

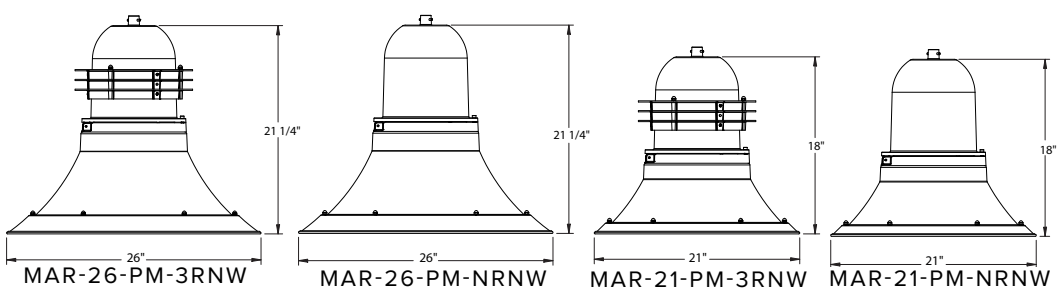

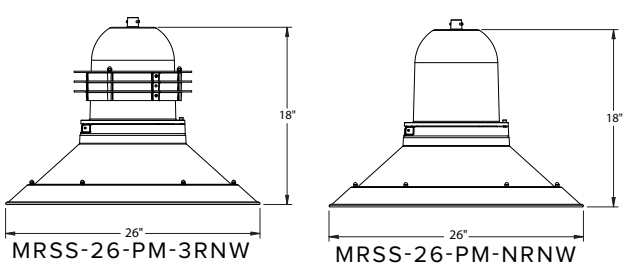

© 2024 Current Lighting Solutions, LLC. All rights reserved. Information and specifications subject to change without notice. All values are design or typical values when measured under laboratory conditions.

BEACON
design . performance . technology

URBAN SERIES

URBAN LUMINAIRE

SIDE MOUNT

* Arms ordered separately, arms mount over an open top pole, they do not mount to a tenon.



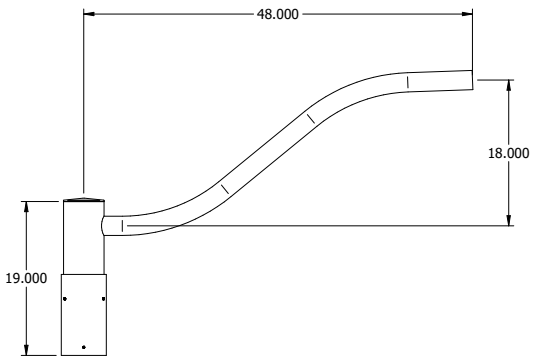

AA-10 COBRA

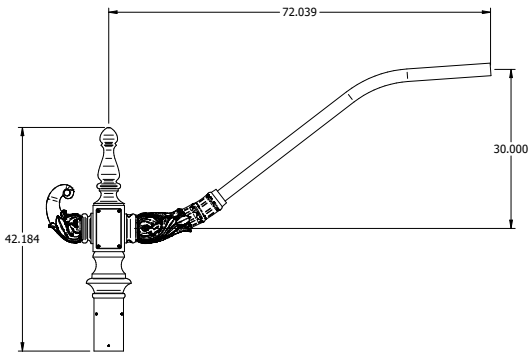

AA-10B COBRA BALBOA

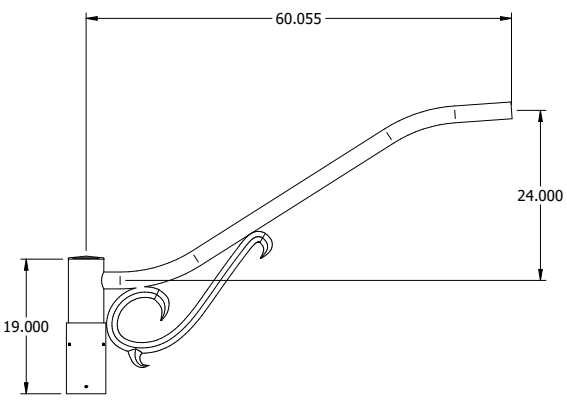

AA-10S COBRA SCROLL

© 2024 Current Lighting Solutions, LLC. All rights reserved. Information and specifications subject to change without notice. All values are design or typical values when measured under laboratory conditions.

BEACON
design . performance . technology

URBAN SERIES

URBAN LUMINAIRE

PENDANT MOUNT

* Arms ordered separately, arms mount over an open top pole, they do not mount to a tenon.



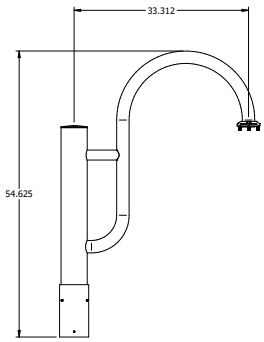

AA-41 RAILROAD STRAP

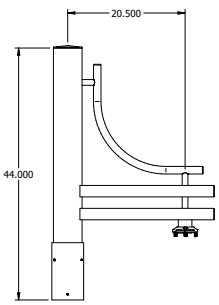

AA-10 SMALL PIERWALK

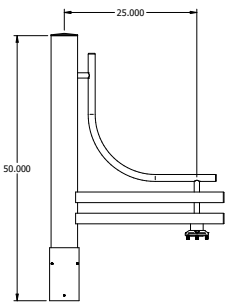

AA-38 LARGE PIERWALK

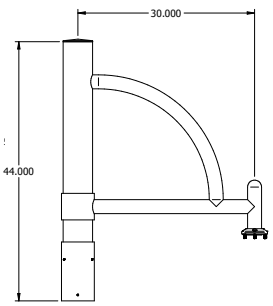

AA-49 RADIUS

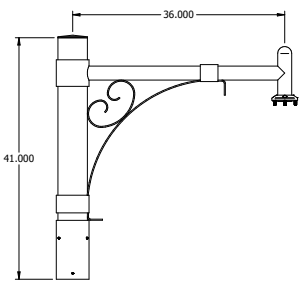

AA-27 STRATFORD

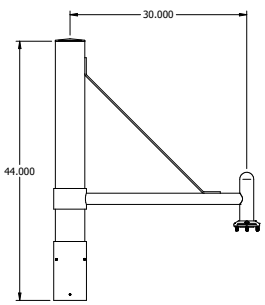

AA-44 STRUT

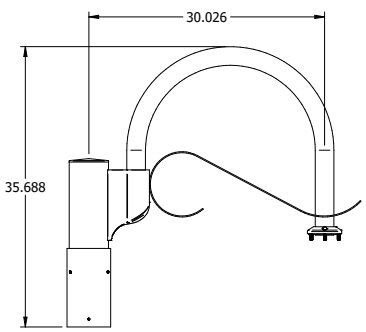

AA-45 TWIN EAGLES

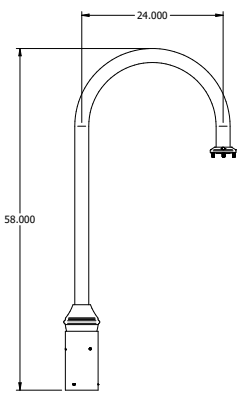

AA-39 RAILROAD

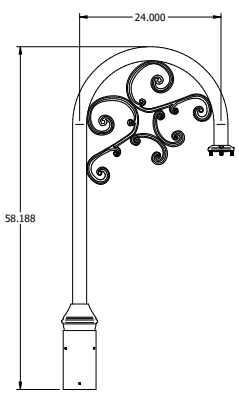

AA-39S RAILROAD SCROLL

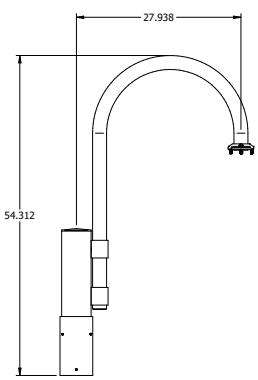

AA-42 RAILROAD SCS

© 2024 Current Lighting Solutions, LLC. All rights reserved. Information and specifications subject to change without notice. All values are design or typical values when measured under laboratory conditions.

BEACON
design . performance . technology

URBAN SERIES
URBAN LUMINAIRE

DELIVERED LUMENS

# of LEDs	NOMINAL WATTAGE (W)	SYSTEM WATTS (W)	DISTRIBUTION TYPE	5K7 (5000K nominal, 70 CRI)					4K7 (4000K nominal, 70 CRI)					3K7 (3000K nominal, 70 CRI)				
				LUMENS	LPW	B	U	G	LUMENS	LPW	B	U	G	LUMENS	LPW	B	U	G
18	25	27.8	FR	3428	123	0	0	0	3496	126	0	0	0	3233	116	0	0	0
			2	3236	117	1	0	1	3300	119	1	0	1	3052	110	1	0	1
			3	3164	114	1	0	1	3226	116	1	0	1	2983	107	1	0	1
			4F	3257	117	0	0	1	3321	120	0	0	1	3071	110	0	0	1
			4W	3114	112	1	0	1	3176	114	1	0	1	2937	106	1	0	1
			5QM	3398	122	2	0	0	3465	125	2	0	0	3204	115	2	0	0
			5QN	3431	124	2	0	0	3499	126	2	0	0	3236	116	2	0	0
			5QW	2937	106	2	0	1	2995	108	2	0	1	2770	100	0	0	0
			5RW	3150	113	2	0	2	3212	116	2	0	2	2970	107	2	0	2
			5W	3207	116	2	0	1	3271	118	2	0	1	3024	109	2	0	1
	39	45.1	FR	4977	110	0	0	0	5076	113	0	0	0	4694	104	0	0	0
			2	4699	104	1	0	1	4791	106	1	0	1	4431	98	1	0	1
			3	4593	102	1	0	1	4684	104	1	0	1	4332	96	1	0	1
			4F	4729	105	0	0	1	4822	107	0	0	1	4459	99	0	0	1
			4W	4522	100	1	0	1	4611	102	1	0	1	4264	95	1	0	1
			5QM	4934	110	2	0	0	5032	112	2	0	0	4653	103	2	0	0
			5QN	4982	111	2	0	0	5081	113	2	0	0	4698	104	2	0	0
			5QW	4522	100	3	0	1	4611	102	3	0	1	4264	95	3	0	1
			5RW	4573	101	2	0	2	4664	104	2	0	2	4313	96	2	0	2
			5W	4657	103	2	0	1	4749	105	2	0	1	4391	97	2	0	1
	50	57.5	FR	6019	105	0	0	0	6138	107	0	0	0	5676	99	0	0	0
			2	5682	99	1	0	1	5794	101	1	0	1	5358	93	1	0	1
			3	5555	97	1	0	1	5665	99	1	0	1	5238	91	1	0	1
			4F	5718	100	0	0	1	5831	101	0	0	1	5392	94	0	0	1
			4W	5468	95	1	0	1	5576	97	1	0	1	5156	90	1	0	1
			5QM	5967	104	2	0	0	6085	106	2	0	0	5627	98	2	0	0
			5QN	6025	105	2	0	0	6144	107	2	0	0	5682	99	2	0	0
			5QW	5468	95	3	0	1	5576	97	3	0	1	5156	90	3	0	1
			5RW	5531	96	2	0	2	5640	98	2	0	2	5215	91	2	0	2
			5W	5632	98	2	0	1	5743	100	2	0	1	5311	92	2	0	1
	70	62.4	FR	6650	107	0	0	0	6781	109	0	0	0	6271	100	0	0	0
			2	6277	101	1	0	1	6401	103	1	0	1	5919	95	1	0	1
			3	6137	98	1	0	1	6258	100	1	0	1	5787	93	1	0	1
			4F	6317	101	0	0	1	6442	103	0	0	1	5957	95	0	0	1
			4W	6041	97	1	0	1	6160	99	1	0	1	5696	91	1	0	1
			5QM	6592	106	2	0	0	6722	108	2	0	0	6216	100	2	0	0
			5QN	6656	107	2	0	0	6788	109	2	0	0	6277	101	2	0	0
			5QW	6041	97	3	0	1	6160	99	3	0	1	5696	91	3	0	1
			5RW	6110	98	2	0	2	6231	100	2	0	2	5762	92	2	0	2
			5W	6221	100	2	0	1	6344	102	2	0	1	5867	94	2	0	1

DELIVERED LUMENS CHART CONTINUED ONTO NEXT PAGE

Notes:

1 Lumen values are from photometric tests performed in accordance with IESNA LM-79-08. Data is considered to be representative of the configurations shown. Actual performance may differ as a result of end-user environment and application.

* Available in the 26" Urban only

© 2024 Current Lighting Solutions, LLC. All rights reserved. Information and specifications subject to change without notice. All values are design or typical values when measured under laboratory conditions.

BEACON
design . performance . technology

URBAN SERIES
URBAN LUMINAIRE

DELIVERED LUMENS (CONTINUED)

				5K7 (5000K nominal, 70 CRI)					4K7 (4000K nominal, 70 CRI)					3K7 (3000K nominal, 70 CRI)				
# of LEDs	NOMINAL WATTAGE (W)	SYSTEM WATTS (W)	DISTRIBUTION TYPE	LUMENS	LPW	B	U	G	LUMENS	LPW	B	U	G	LUMENS	LPW	B	U	G
18	90	82.3	FR	7681	93	0	0	0	7833	95	0	0	0	7244	88	0	0	0
			2	7251	88	1	0	1	7394	90	1	0	1	6838	83	1	0	1
			3	7089	86	1	0	1	7229	88	1	0	1	6685	81	1	0	1
			4F	7297	89	0	0	1	7442	90	0	0	1	6882	84	0	0	1
			4W	6978	85	1	0	1	7116	86	1	0	1	6580	80	1	0	1
			5QM	7614	93	2	0	0	7765	94	2	0	0	7180	87	2	0	0
			5QN	7689	93	2	0	0	7841	95	2	0	0	7251	88	2	0	0
			5QW	6978	85	3	0	1	7116	86	3	0	1	6580	80	3	0	1
			5RW	7058	86	2	0	2	7197	87	2	0	2	6656	81	2	0	2
			5W	7187	87	2	0	1	7329	89	2	0	1	6777	82	2	0	1
	110	98.7	FR	8346	85	0	0	0	8511	86	0	0	0	7870	80	0	0	0
			2	7878	80	1	0	1	8034	81	1	0	1	7429	75	1	0	1
			3	7702	78	1	0	1	7854	80	1	0	1	7263	74	1	0	1
			4F	7929	80	0	0	1	8085	82	0	0	1	7477	76	0	0	1
			4W	7582	77	1	0	1	7731	78	1	0	1	7150	72	1	0	1
			5QM	8273	84	2	0	0	8437	86	2	0	0	7802	79	2	0	0
			5QN	8354	85	2	0	0	8519	86	2	0	0	7878	80	2	0	0
			5QW	7582	77	3	0	2	7731	78	3	0	2	7150	72	3	0	2
			5RW	7668	78	2	0	2	7820	79	2	0	2	7231	73	2	0	2
			5W	7808	79	2	0	1	7963	81	2	0	1	7363	75	2	0	1
36	120	124.9	FR	12463	100	0	0	0	12709	102	0	0	0	11752	94	0	0	0
			2	11765	94	1	0	1	11997	96	1	0	1	11094	89	1	0	1
			3	11501	92	1	0	1	11728	94	1	0	1	10846	87	1	0	1
			4F	11840	95	0	0	1	12074	97	0	0	1	11165	89	0	0	1
			4W	11321	91	1	0	1	11545	92	1	0	1	10676	85	1	0	1
			5QM	12354	99	2	0	0	12598	101	2	0	0	11650	93	2	0	0
			5QN	12475	100	2	0	0	12722	102	2	0	0	11764	94	2	0	0
			5QW	11321	91	3	0	2	11545	92	3	0	2	10676	85	3	0	2
			5RW	11451	92	2	0	2	11677	93	2	0	2	10798	86	2	0	2
			5W	11660	93	2	0	1	11890	95	2	0	1	10995	88	2	0	1
	135	137.5	FR	13255	96	0	0	0	13517	98	0	0	0	12500	91	0	0	0
			2	12513	91	1	0	1	12760	93	1	0	1	11799	86	1	0	1
			3	12232	89	1	0	1	12474	91	1	0	1	11535	84	1	0	1
			4F	12593	92	0	0	1	12841	93	0	0	1	11875	86	0	0	1
			4W	12041	88	1	0	1	12279	89	1	0	1	11355	83	1	0	1
			5QM	13140	96	2	0	0	13399	97	2	0	0	12391	90	2	0	0
			5QN	13268	97	2	0	0	13531	98	2	0	0	12512	91	2	0	0
			5QW	12041	88	3	0	2	12279	89	3	0	2	11355	83	3	0	2
			5RW	12179	89	2	0	2	12420	90	2	0	2	11485	84	2	0	2
			5W	12401	90	2	0	1	12646	92	2	0	1	11695	85	2	0	1
			TCR	13051	95	0	0	0	13308	97	0	0	0	12307	90	0	0	0

DELIVERED LUMENS CHART CONTINUED ONTO NEXT PAGE

Notes:

1 Lumen values are from photometric tests performed in accordance with IESNA LM-79-08. Data is considered to be representative of the configurations shown. Actual performance may differ as a result of end-user environment and application.

* Available in the 26" Urban only

© 2024 Current Lighting Solutions, LLC. All rights reserved. Information and specifications subject to change without notice. All values are design or typical values when measured under laboratory conditions.

BEACON
design . performance . technology

URBAN SERIES

URBAN LUMINAIRE

DELIVERED LUMENS (CONTINUED)

				5K7 (5000K nominal, 70 CRI)					4K7 (4000K nominal, 70 CRI)					3K7 (3000K nominal, 70 CRI)				
# of LEDs	NOMINAL WATTAGE (W)	SYSTEM WATTS (W)	DISTRIBUTION TYPE	LUMENS	LPW	B	U	G	LUMENS	LPW	B	U	G	LUMENS	LPW	B	U	G
36	155	150.6	FR	13992	93	0	0	0	14268	95	0	0	0	13194	88	0	0	0
			2	13208	88	1	0	1	13469	89	1	0	1	12455	83	1	0	1
			3	12912	86	1	0	1	13167	87	1	0	1	12176	81	1	0	1
			4F	13293	88	0	0	1	13555	90	0	0	1	12535	83	0	0	1
			4W	12711	84	1	0	1	12962	86	1	0	1	11986	80	1	0	1
			5QM	13870	92	2	0	0	14144	94	2	0	0	13079	87	2	0	0
			5QN	14006	93	2	0	0	14283	95	2	0	0	13208	88	2	0	0
			5QW	12711	84	3	0	2	12962	86	3	0	2	11986	80	3	0	2
			5RW	12856	85	2	0	2	13110	87	2	0	2	12123	80	2	0	2
			5W	13091	87	2	0	1	13349	89	2	0	1	12345	82	2	0	1
	175	167.3	FR	14784	88	0	0	0	15076	90	0	0	0	13942	83	0	0	0
			2	13956	83	1	0	1	14232	85	1	0	1	13161	79	1	0	1
			3	13644	82	1	0	1	13913	83	1	0	1	12866	77	1	0	1
			4F	14045	84	0	0	1	14323	86	0	0	1	13245	79	0	0	1
			4W	13430	80	1	0	1	13696	82	1	0	1	12665	76	1	0	1
			5QM	14655	88	2	0	0	14945	89	2	0	0	13820	83	2	0	0
			5QN	14799	88	2	0	0	15091	90	2	0	0	13956	83	2	0	0
			5QW	13430	80	3	0	2	13696	82	3	0	2	12665	76	3	0	2
			5RW	13584	81	2	0	2	13852	83	2	0	2	12810	77	2	0	2
			5W	13832	83	2	0	1	14105	84	2	0	1	13044	78	2	0	1

Notes:

1 Lumen values are from photometric tests performed in accordance with IESNA LM-79-08. Data is considered to be representative of the configurations shown. Actual performance may differ as a result of end-user environment and application.

* Available in the 26" Urban only

ELECTRICAL DATA

# LED's	Nominal Wattage (W)	Input Voltage (Volts)	Oper. Current (Amps)	System Power (W)
18	25	120	0.23	27.8
		277	0.10	
		347	0.08	
		480	0.06	
	39	120	0.38	45.1
		277	0.16	
		347	0.13	
		480	0.09	
	50	120	0.48	57.7
		277	0.21	
		347	0.17	
		480	0.12	
	70	120	0.52	62.4
		277	0.23	
		347	0.18	
		480	0.13	
	90	120	0.69	82.3
		277	0.30	
		347	0.24	
		480	0.17	
	110	120	0.82	98.7
		277	0.36	
		347	0.28	
		480	0.21	

# LED's	Nominal Wattage (W)	Input Voltage (Volts)	Oper. Current (Amps)	System Power (W)
36	120	120	1.04	124.9
		277	0.45	
		347	0.36	
		480	0.26	
	135	120	1.15	137.5
		277	0.50	
		347	0.40	
		480	0.29	
	155	120	1.26	150.6
		277	0.54	
		347	0.43	
		480	0.31	
	175	120	1.39	167.3
		277	0.60	
		347	0.48	
		480	0.35	

© 2024 Current Lighting Solutions, LLC. All rights reserved. Information and specifications subject to change without notice. All values are design or typical values when measured under laboratory conditions.

BEACON
design . performance . technology

URBAN SERIES

URBAN LUMINAIRE

PROJECTED LUMEN MAINTENANCE

Ambient Temperature	OPERATING HOURS					
	0	25,000	*TM-21-11 36,000	50,000	100,000	L70 (Hours)
25°C / 77°F	1.00	0.97	0.96	0.95	0.91	408,000
40°C / 104°F	0.99	0.96	0.95	0.94	0.89	356,000

Notes:

* Projected per IESNA TM-21-11. Data references the extrapolated performance projections for thebase model in a 40°C ambient, based on 10,000 hours of LED testing per IESNA LM-80-08.

LUMINAIRE AMBIENT TEMPERATURE FACTOR (LATF)

Ambient Temperature		Lumen Multiplier
0°C	32°F	1.03
10°C	50°F	1.01
20°C	68°F	1.00
25°C	77°F	1.00
30°C	86°F	0.99
40°C	104°F	0.98
50°C	122°F	0.97

Use these factors to determine relative lumen output for average ambient temperatures from 0-40°C (32-104°F).

EPA

EPA: X.XX sqft		PM	SM	YM
CAP	21	1.04	1.14	1.39
	26	1.39	1.49	1.79
MAR	21	1.00	1.10	1.35
	26	1.25	1.35	1.65
MRDS	21	1.00	1.10	1.35
	26	1.25	1.35	1.65
MRSS	26	1.17	1.27	1.57

FOR ALL CONFIGURATIONS LINE DRAWINGS PLEASE SEE:

URB-HD-P.PDF
URB-HD-S.PDF
URB-HD-YM.PDF

© 2024 Current Lighting Solutions, LLC. All rights reserved. Information and specifications subject to change without notice. All values are design or typical values when measured under laboratory conditions.

BEACON design . performance . technology

DATE: LOCATION:

TYPE: PROJECT:

CATALOG #:

RSA-B-KENS Series Poles

ROUND STRAIGHT ALUMINUM

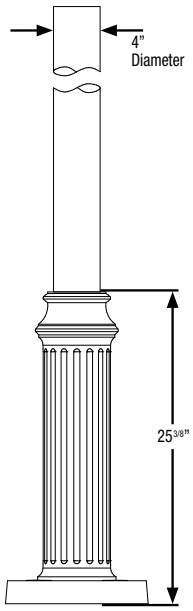

APPLICATIONS

- Lighting installations for side and top mounting of luminaires with effective projected area (EPA) not exceeding maximum allowable loading of the specified pole in its installed geographic location

CONSTRUCTION

- SHAFT: One-piece straight aluminum with fluted or smooth cross section; Extruded shafts of 6061-T6 aluminum in 1/8", 3/16", or 1/4" thickness. Decorative base of 356 cast aluminum.
- POLE CAP OR FINALS: Cap or decorative finials available for side mounted luminaires. Open top or tenons provided for post top mounted luminaires.
- HAND HOLE: Hand hole provided in cast base; Mounting provisions for grounding lug located behind cover
- ANCHOR BOLTS: Four galvanized anchor bolts provided per pole with minimum yield of 55,000 psi (ASTM F1554). Galvanized hardware with two washers and two nuts per bolt for leveling

FINISH

- Durable thermoset polyester powder coat paint finish with nominal 3.0 mil thickness
- Powder paint finish coat available in twelve standard colors; Custom colors available; RAL number preferable.

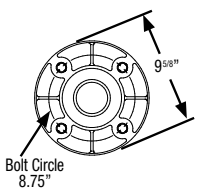

TENONS & POLE CAPS

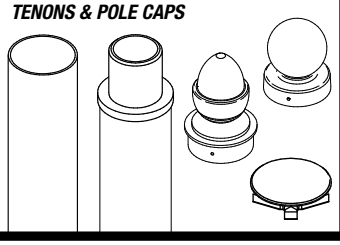

BASE DETAIL

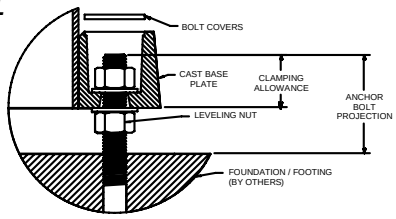

ORDERING EXAMPLE:

RSA-B-KENS - S/F - 16 - 40 - A/B/C - 2L - B3 - DBT - VM2

SERIES	STYLE	HEIGHT	SHAFT	THICKNESS
RSA-B-KENS Round Straight Aluminum Pole Beacon	**S** Smooth **F** Fluted	Reference page 2 Ordering matrix **12'**	Reference page 2 Ordering matrix **40**	Reference page 2 Ordering matrix **B**

MOUNTING

- **1** Single arm mount
- **2** Two fixtures at 180˚
- **2L** Two fixtures at 90˚
- **3T** Three fixtures at 90˚
- **3Y** Three at 120˚
- **4** Four fixtures at 90˚
- **OT** Open top (includes pole cap)
- **TN3** Tenon 3 x 3
- **TN4** Tenon 3 x 4
- **CAP** Cap
- **ARC** Acorn Finial
- **BAL** Ball Finial

FINISH

- **BLT** Black Matte Textured
- **BLS** Black Gloss Smooth
- **DBT** Dark Bronze Matte Textured
- **DBS** Dark Bronze Gloss Smooth
- **GTT** Graphite Matte Textured
- **LGS** Light Grey Gloss Smooth
- **PSS** Platinum Silver Smooth
- **WHT** White Matte Textured
- **WHS** White Gloss Smooth
- **VGT** Verde Green Textured

Color Option

- **CC** Custom Color

OPTIONS

- **GFI'** 20 Amp GFCI Receptacle and Cover
- **EHH'** Extra Handhole
- **C05'** .5" Coupling
- **C07'** .75" Coupling
- **C20'** 2" Coupling
- **VM2** 2nd mode vibration damper
- **LAB** Less Anchor Bolts

DRILL PATTERN

- **B1** Cruzer, "AM" arm
- **B3** 2 bolt (2-½" spacing), Viper "A" arm
- **S2** 2 bolt (3-½" spacing), Viper "AD" arm

MOUNTING ORIENTATION

Denotes handhole location

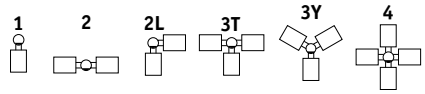

1 Specify option location using logic found on page 2 **(Option Orientation)**

ACCESSORIES- Order Separately

Catalog Number	Description
VM2SXX	2nd mode vibration damper

© 2023 HLI Solutions, Inc. All rights reserved. Information and specifications subject to change without notice. All values are design or typical values when measured under laboratory conditions.

BEACON
design . performance . technology

DATE: LOCATION:

TYPE: PROJECT:

CATALOG #:

RSA-B-KENS Series Poles

ROUND STRAIGHT ALUMINUM

ORDERING INFORMATION Cont.

Catalog Number	Height		Nominal Shaft Dimensions	Wall Thickness	Bolt Circle (suggested)	Bolt Square	Base Plate Size	Anchor Bolt Size	Bolt Projection	Pole weight (lbs)
	Feet	Meters								
RSA-B-KENS-S-10-40-A	10	3.0	4" Round	0.125"	8-3/4"	6.19"	11-5/8" x 25-3/8" Tall	3/4 x 30 x 3	2-3/4"	39
RSA-B-KENS-S-12-40-A	12	3.7	4" Round	0.125"	8-3/4"	6.19"	11-5/8" x 25-3/8" Tall	3/4 x 30 x 3	2-3/4"	43
RSA-B-KENS-S-14-40-A	14	4.3	4" Round	0.125"	8-3/4"	6.19"	11-5/8" x 25-3/8" Tall	3/4 x 30 x 3	2-3/4"	46
RSA-B-KENS-S-16-40-A	16	4.9	4" Round	0.125"	8-3/4"	6.19"	11-5/8" x 25-3/8" Tall	3/4 x 30 x 3	2-3/4"	50
RSA-B-KENS-S-18-40-A	18	5.5	4" Round	0.125"	8-3/4"	6.19"	11-5/8" x 25-3/8" Tall	3/4 x 30 x 3	2-3/4"	53
RSA-B-KENS-S-20-40-A	20	6.1	4" Round	0.125"	8-3/4"	6.19"	11-5/8" x 25-3/8" Tall	3/4 x 30 x 3	2-3/4"	57
RSA-B-KENS-S-10-40-B	10	3.0	4" Round	0.188"	8-3/4"	6.19"	11-5/8" x 25-3/8" Tall	3/4 x 30 x 3	2-3/4"	47
RSA-B-KENS-S-12-40-B	12	3.7	4" Round	0.188"	8-3/4"	6.19"	11-5/8" x 25-3/8" Tall	3/4 x 30 x 3	2-3/4"	53
RSA-B-KENS-S-14-40-B	14	4.3	4" Round	0.188"	8-3/4"	6.19"	11-5/8" x 25-3/8" Tall	3/4 x 30 x 3	2-3/4"	58
RSA-B-KENS-S-16-40-B	16	4.9	4" Round	0.188"	8-3/4"	6.19"	11-5/8" x 25-3/8" Tall	3/4 x 30 x 3	2-3/4"	63
RSA-B-KENS-S-18-40-B	18	5.5	4" Round	0.188"	8-3/4"	6.19"	11-5/8" x 25-3/8" Tall	3/4 x 30 x 3	2-3/4"	69
RSA-B-KENS-S-20-40-B	20	6.1	4" Round	0.188"	8-3/4"	6.19"	11-5/8" x 25-3/8" Tall	3/4 x 30 x 3	2-3/4"	74
RSA-B-KENS-S-22-40-B	22	6.7	4" Round	0.188"	8-3/4"	6.19"	11-5/8" x 25-3/8" Tall	3/4 x 30 x 3	2-3/4"	79
RSA-B-KENS-S-24-40-B	24	7.3	4" Round	0.188"	8-3/4"	6.19"	11-5/8" x 25-3/8" Tall	3/4 x 30 x 3	2-3/4"	84
RSA-B-KENS-S-10-40-C	10	3.0	4" Round	0.25"	8-3/4"	6.19"	11-5/8" x 25-3/8" Tall	3/4 x 30 x 3	2-3/4"	56
RSA-B-KENS-S-12-40-C	12	3.7	4" Round	0.25"	8-3/4"	6.19"	11-5/8" x 25-3/8" Tall	3/4 x 30 x 3	2-3/4"	62
RSA-B-KENS-S-14-40-C	14	4.3	4" Round	0.25"	8-3/4"	6.19"	11-5/8" x 25-3/8" Tall	3/4 x 30 x 3	2-3/4"	69
RSA-B-KENS-S-16-40-C	16	4.9	4" Round	0.25"	8-3/4"	6.19"	11-5/8" x 25-3/8" Tall	3/4 x 30 x 3	2-3/4"	76
RSA-B-KENS-S-18-40-C	18	5.5	4" Round	0.25"	8-3/4"	6.19"	11-5/8" x 25-3/8" Tall	3/4 x 30 x 3	2-3/4"	83
RSA-B-KENS-S-20-40-C	20	6.1	4" Round	0.25"	8-3/4"	6.19"	11-5/8" x 25-3/8" Tall	3/4 x 30 x 3	2-3/4"	90
RSA-B-KENS-S-22-40-C	22	6.7	4" Round	0.25"	8-3/4"	6.19"	11-5/8" x 25-3/8" Tall	3/4 x 30 x 3	2-3/4"	97
RSA-B-KENS-S-24-40-C	24	7.3	4" Round	0.25"	8-3/4"	6.19"	11-5/8" x 25-3/8" Tall	3/4 x 30 x 3	2-3/4"	104
RSA-B-KENS-F-10-40-B	10	3.0	4" Fluted	0.188"	8-3/4"	6.19"	11-5/8" x 25-3/8" Tall	3/4 x 30 x 3	2-3/4"	50
RSA-B-KENS-F-12-40-B	12	3.7	4" Fluted	0.188"	8-3/4"	6.19"	11-5/8" x 25-3/8" Tall	3/4 x 30 x 3	2-3/4"	55
RSA-B-KENS-F-14-40-B	14	4.3	4" Fluted	0.188"	8-3/4"	6.19"	11-5/8" x 25-3/8" Tall	3/4 x 30 x 3	2-3/4"	61
RSA-B-KENS-F-16-40-B	16	4.9	4" Fluted	0.188"	8-3/4"	6.19"	11-5/8" x 25-3/8" Tall	3/4 x 30 x 3	2-3/4"	67
RSA-B-KENS-F-18-40-B	18	5.5	4" Fluted	0.188"	8-3/4"	6.19"	11-5/8" x 25-3/8" Tall	3/4 x 30 x 3	2-3/4"	72
RSA-B-KENS-F-20-40-B	20	6.1	4" Fluted	0.188"	8-3/4"	6.19"	11-5/8" x 25-3/8" Tall	3/4 x 30 x 3	2-3/4"	78
RSA-B-KENS-F-22-40-B	22	6.7	4" Fluted	0.188"	8-3/4"	6.19"	11-5/8" x 25-3/8" Tall	3/4 x 30 x 3	2-3/4"	84
RSA-B-KENS-F-24-40-B	24	7.3	4" Fluted	0.188"	8-3/4"	6.19"	11-5/8" x 25-3/8" Tall	3/4 x 30 x 3	2-3/4"	90

NOTE Factory supplied template must be used when setting anchor bolts. Current will deny any claim for incorrect anchorage placement resulting from failure to use factory supplied template and anchor bolts.

EHH - EXTRA HANDHOLE

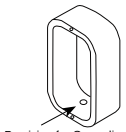

C05 - C07 - C20 - COUPLING

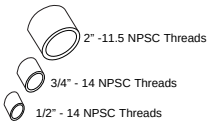

VM2 - VIBRATION DAMPER 2ND MODE

Factory installed, internal damper designed to alter pole resonance to reduce movement and material fatigue caused by 2nd mode vibration.



GFI – 20 AMP GFCI RECEPTACLE & COVER

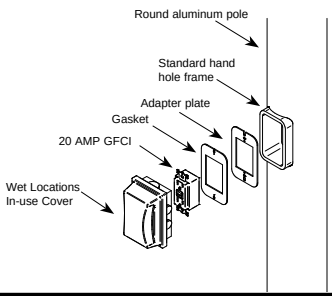

OPTION ORIENTATION

Follow the logic below when ordering location specific options. For each option, include its orientation (in degrees) and its height (in feet). Example: Option C07 should be ordered as: **RSA-B-KENS-F16-40B-TN3-DBT-C05-0-5** (.5" coupling on the handhole/arm side of pole, 15 feet up from the pole base) 1' spacing required between option. Consult factory for other configurations.

VM2SXX - VIBRATION DAMPER 2ND MODE

Field installed, internal damper designed to alter pole resonance to reduce movement and material fatigue caused by 2nd mode vibration.



VM2S08 – 8'
VM2S12 – 12'
VM2S16 – 16'
VM2S20 – 20'
VM2S24 – 24'

For more information about pole vibration and vibration dampers, please consult Pole Vibration Application Guide.
Due to our continued efforts to improve our products, product specifications are subject to change without notice.

© 2023 HLI Solutions, Inc. All rights reserved. Information and specifications subject to change without notice. All values are design or typical values when measured under laboratory conditions.

BEACON
design . performance . technology

DATE: LOCATION:

TYPE: PROJECT:

CATALOG #:

RSA-B-KENS Series Poles

ROUND STRAIGHT ALUMINUM

ASCE7-05 WIND MAP

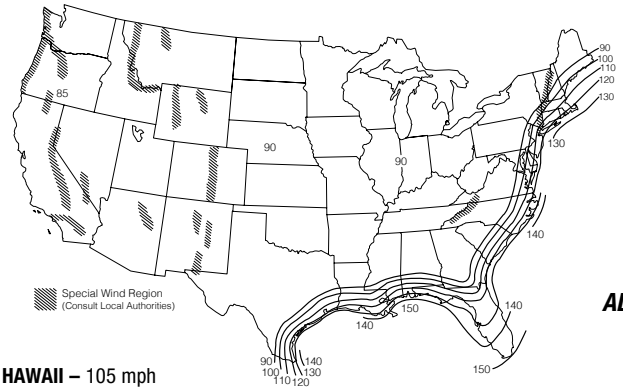

HAWAII – 105 mph
PUERTO RICO – 145 mph

***PRINTED WITH PERMISSION FROM ASCE**

FLORIDA REGION WIND MAP

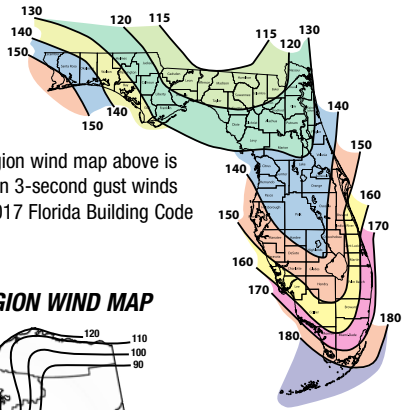

Florida region wind map above is based upon 3-second gust winds and the 2017 Florida Building Code

ALASKA REGION WIND MAP

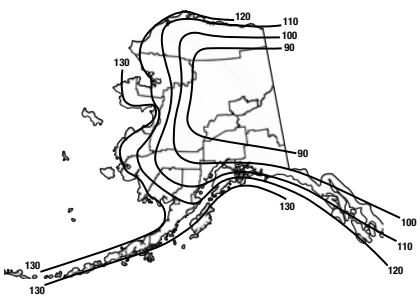

ASCE 7-05 wind map EPA Load Rating - 3 second gust wind speeds										
Catalog Number	**85**	**90**	**100**	**105**	**110**	**120**	**130**	**140**	**145**	**150**
RSA-B-KENS-S-10-40-A	12.2	10.8	8.7	7.8	7.0	5.8	4.9	4.2	3.9	3.6
RSA-B-KENS-S-12-40-A	9.0	7.9	6.2	5.5	4.9	3.9	3.3	2.8	2.6	2.4
RSA-B-KENS-S-14-40-A	6.8	5.9	4.5	3.9	3.4	2.6	2.2	1.8	1.6	1.5
RSA-B-KENS-S-16-40-A	5.1	4.4	3.2	2.7	2.3	1.6	1.3	1.0	0.9	0.8
RSA-B-KENS-S-18-40-A	3.8	3.1	2.1	1.7	1.3	0.8	0.5	NR	NR	NR
RSA-B-KENS-S-20-40-A	2.6	2.1	1.2	0.8	0.5	NR	NR	NR	NR	NR
RSA-B-KENS-S-10-40-B	18.0	16.1	13.0	11.8	10.6	8.9	7.5	6.5	6.0	5.6
RSA-B-KENS-S-12-40-B	13.6	12.1	9.7	8.7	7.8	6.4	5.4	4.6	4.3	4.0
RSA-B-KENS-S-14-40-B	10.6	9.3	7.3	6.5	5.8	4.7	3.9	3.3	3.0	2.8
RSA-B-KENS-S-16-40-B	8.3	7.3	5.6	4.9	4.3	3.3	2.7	2.3	2.1	1.9
RSA-B-KENS-S-18-40-B	6.5	5.6	4.1	3.5	3.0	2.2	1.8	1.4	1.3	1.2
RSA-B-KENS-S-20-40-B	5.0	4.2	2.9	2.4	2.0	1.3	1.0	0.7	0.6	0.5
RSA-B-KENS-S-22-40-B	3.7	3.0	1.9	1.5	1.1	0.5	NR	NR	NR	NR
RSA-B-KENS-S-24-40-B	2.7	2.1	1.1	0.7	NR	NR	NR	NR	NR	NR
RSA-B-KENS-S-10-40-C	23.3	20.8	16.9	15.3	13.9	11.6	9.9	8.5	7.9	7.4
RSA-B-KENS-S-12-40-C	17.7	15.8	12.7	11.5	10.4	8.6	7.3	6.2	5.8	5.4
RSA-B-KENS-S-14-40-C	14.0	12.4	9.8	8.8	7.9	6.5	5.4	4.6	4.3	4.0
RSA-B-KENS-S-16-40-C	11.2	9.9	7.7	6.8	6.1	4.8	4.1	3.4	3.1	2.9
RSA-B-KENS-S-18-40-C	8.9	7.8	5.9	5.2	4.5	3.5	2.9	2.4	2.2	2.0
RSA-B-KENS-S-20-40-C	7.0	6.1	4.5	3.8	3.3	2.4	1.9	1.5	1.4	1.2
RSA-B-KENS-S-22-40-C	5.5	4.7	3.3	2.7	2.2	1.5	1.1	0.8	0.7	0.6
RSA-B-KENS-S-24-40-C	4.3	3.5	2.3	1.8	1.3	0.7	NR	NR	NR	NR
RSA-B-KENS-F-10-40-B	17.9	16.0	12.9	11.6	10.5	8.7	7.2	6.1	5.6	5.1
RSA-B-KENS-F-12-40-B	13.5	12.0	9.5	8.5	7.6	6.2	5.0	4.1	3.7	3.3
RSA-B-KENS-F-14-40-B	10.4	9.2	7.2	6.3	5.6	4.4	3.5	2.7	2.4	2.1
RSA-B-KENS-F-16-40-B	8.1	7.1	5.4	4.7	4.1	3.0	2.2	1.6	1.3	1.0
RSA-B-KENS-F-18-40-B	6.3	5.4	3.9	3.3	2.8	1.9	1.2	0.6	NR	NR
RSA-B-KENS-F-20-40-B	4.7	3.9	2.7	2.2	1.7	0.9	NR	NR	NR	NR
RSA-B-KENS-F-22-40-B	3.4	2.8	1.6	1.2	0.8	NR	NR	NR	NR	NR
RSA-B-KENS-F-24-40-B	2.4	1.8	0.8	NR	NR	NR	NR	NR	NR	NR

Florida Building Code 2017 EPA Load Rating - 3 second gust wind speeds								
Catalog Number	**115**	**120**	**130**	**140**	**150**	**160**	**170**	**180**
RSA-10-40-A-S-KENS	9.0	8.2	6.9	5.8	4.9	4.1	3.8	3.6
RSA-12-40-A-S-KENS	6.5	5.8	4.8	3.9	3.2	2.6	2.5	2.4
RSA-14-40-A-S-KENS	4.7	4.1	3.2	2.5	1.9	1.4	1.2	1.1
RSA-16-40-A-S-KENS	3.2	2.8	2.0	1.4	0.9	0.5	NR	NR
RSA-18-40-A-S-KENS	2.1	1.7	1.0	0.5	NR	NR	NR	NR
RSA-20-40-A-S-KENS	1.1	0.8	NR	NR	NR	NR	NR	NR
RSA-10-40-B-S-KENS	13.6	12.4	10.5	8.9	7.6	6.6	6.3	5.5
RSA-12-40-B-S-KENS	10.1	9.2	7.6	6.4	5.4	4.5	4.3	4.0
RSA-14-40-B-S-KENS	7.6	6.9	5.6	4.6	3.7	3.0	2.9	2.7
RSA-16-40-B-S-KENS	5.7	5.1	4.0	3.2	2.4	1.8	1.6	1.4
RSA-18-40-B-S-KENS	4.2	3.6	2.7	2.0	1.4	0.8	0.6	NR
RSA-20-40-B-S-KENS	2.9	2.4	1.6	1.0	0.5	NR	NR	NR
RSA-22-40-B-S-KENS	1.9	1.4	0.7	NR	NR	NR	NR	NR
RSA-24-40-B-S-KENS	0.9	0.6	NR	NR	NR	NR	NR	NR
RSA-10-40-C-S-KENS	17.6	16.2	13.7	11.7	10.1	8.8	8.2	7.3
RSA-12-40-C-S-KENS	13.3	12.1	10.2	8.6	7.3	6.2	5.8	5.4
RSA-14-40-C-S-KENS	10.3	9.3	7.7	6.4	5.3	4.5	4.3	4.0
RSA-16-40-C-S-KENS	7.9	7.1	5.8	4.7	3.8	3.0	2.7	2.5
RSA-18-40-C-S-KENS	6.0	5.4	4.2	3.3	2.5	1.9	1.7	1.5
RSA-20-40-C-S-KENS	4.5	3.9	2.9	2.1	1.4	0.9	0.7	0.5
RSA-22-40-C-S-KENS	3.2	2.7	1.9	1.1	0.5	NR	NR	NR
RSA-24-40-C-S-KENS	2.2	1.7	0.9	NR	NR	NR	NR	NR
RSA-10-40-B-F-KENS	13.6	12.4	10.5	8.9	7.6	6.6	5.7	4.9
RSA-12-40-B-F-KENS	10.1	9.2	7.6	6.4	5.4	4.5	3.8	3.2
RSA-14-40-B-F-KENS	7.6	6.9	5.6	4.6	3.7	3.0	2.4	1.9
RSA-16-40-B-F-KENS	5.7	5.1	4.0	3.2	2.4	1.8	1.3	0.9
RSA-18-40-B-F-KENS	4.2	3.6	2.7	2.0	1.4	0.8	NR	NR
RSA-20-40-B-F-KENS	2.9	2.4	1.6	1.0	0.5	NR	NR	NR
RSA-22-40-B-F-KENS	1.9	1.4	0.7	NR	NR	NR	NR	NR
RSA-24-40-B-F-KENS	0.9	0.6	NR	NR	NR	NR	NR	NR

© 2023 HLI Solutions, Inc. All rights reserved. Information and specifications subject to change without notice. All values are design or typical values when measured under laboratory conditions.

BEACON
design . performance . technology

DATE: LOCATION:

TYPE: PROJECT:

CATALOG #:

RSA-B-KENS Series Poles

ROUND STRAIGHT ALUMINUM

NOTES

Wind-speed Website disclaimer:
Current has no connection to the linked website and makes no representations as to its accuracy. While the information presented on this third-party website provides a useful starting point for analyzing wind conditions, Current has not verified any of the information on this third party website and assumes no responsibility or liability for its accuracy. The material presented in the windspeed website should not be used or relied upon for any specific application without competent examination and verification of its accuracy, suitability and applicability by engineers or other licensed professionals. Current does not intend that the use of this information replace the sound judgment of such competent professionals, having experience and knowledge in the field of practice, nor to substitute for the standard of care required of such professionals in interpreting and applying the results of the windspeed report provided by this website. Users of the information from this third party website assume all liability arising from such use. Use of the output of these referenced websites do not imply approval by the governing building code bodies responsible for building code approval and interpretation for the building site described by latitude/longitude location in the windspeed report. http://windspeed.atcouncil.org

- Allowable EPA, to determine max pole loading weight, multiply allowable EPA by 30 lbs.
- The tables for allowable pole EPA are based on the ASCE 7-05 Wind Map or the Florida Region Wind Map for the 2010 Florida Building Code. The Wind Maps are intended only as a general guide and cannot be used in conjunction with other maps. Always consult local authorities to determine maximum wind velocities, gusting and unique wind conditions for each specific application
- Allowable pole EPA for jobsite wind conditions must be equal to or greater than the total EPA for fixtures, arms, and accessories to be assembled to the pole. Responsibility lies with the specifier for correct pole selection. Installation of poles without luminaires or attachment of any unauthorized accessories to poles is discouraged and shall void the manufacturer's warranty
- Wind speeds and listed EPAs are for ground mounted installations. Poles mounted on structures (such as bridges and buildings) must consider vibration and coefficient of height factors beyond this general guide; Consult local and federal standards
- Wind Induced Vibration brought on by steady, unidirectional winds and other unpredictable aerodynamic forces are not included in wind velocity ratings. Consult Pole Vibration Application Guide for environmental risk factors and design considerations.
- Extreme Wind Events like, Hurricanes, Typhoons, Cyclones, or Tornadoes may expose poles to flying debris, wind shear or other detrimental effects not included in wind velocity ratings

Due to our continued efforts to improve our products, product specifications are subject to change without notice.

© 2023 HLI Solutions, Inc. All rights reserved. Information and specifications subject to change without notice. All values are design or typical values when measured under laboratory conditions.

BEACON
design . performance . technology

AA-37 Nautilus

ARMS

DATE: LOCATION:

TYPE: PROJECT:

CATALOG #:

Sample	*AA-37*	*S*	*4*	*B*	*P*	*BBT*
Ordering		/	/	/	/	/
	A	**B**	**C**	**D**	**E**	**F**

DETAILS

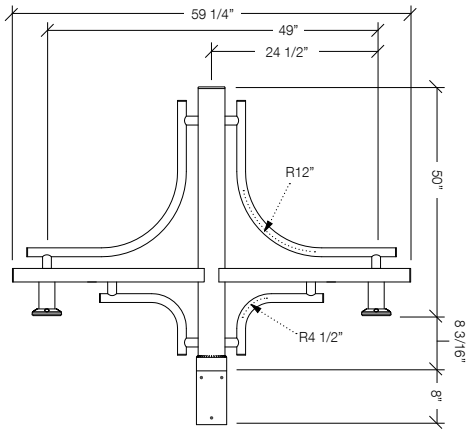

WALL BRACKET DETAILS

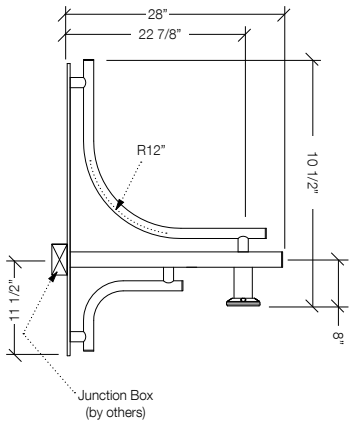

WALL PLATE DETAILS

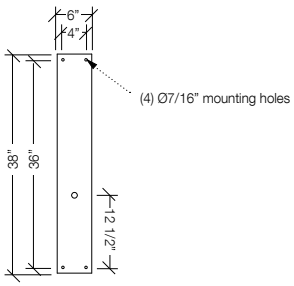

A. MODEL

AA-37	Nautilus

B. POST SHAFT PROFILE

W	wall mount
S	smooth
F	fluted

C. POST SHAFT DIAMETER

4	4"
5	5"
6	6"
OTHER	_____

D. ARRANGEMENT

B *see arrangement table below*

E. LUMINAIRE MOUNTING

P pendant

F. COLOR — BLS - Black Gloss Smooth

BBT	basic black textured
BMT	black matte textured
WHT	white textured
MBT	metallic bronze textured
BZT	bronze textured
DBT	dark bronze textured
GYS	gray smooth
DPS	dark platinum smooth
GNT	green textured
MST	metallic silver textured
MTT	metallic titanium textured
OWI	old world iron
RAL	_____

Construction: All cast aluminum parts shall be low copper alloy A356. All extruded aluminum parts shall be alloy 6061-T6, 6063-T5 or equal.

EPA (effective projected area): EPA is de¬fined as (projected surface area X drag factor) and measured in ft2. Allowable post, luminaire arm, luminaire and accessory EPAs are derived from the most current published AASHTO (American Association of State Highway and Transportation Officials) standard, currently AASHTO 2001 (50yr design life). Customer assumes all responsibility for selecting the ap¬propriate post for installation (consult factory for assistance). Luminaire arm, luminaire and accessory EPA must be equal to or less than allowable EPA of post. Consult a professional engineer for compliance with local codes and standards.

Fasteners: All fasteners shall be Corrosion Resistant. When tamper resistant fasteners are required, spanner HD (snake eye) style shall be provided (special tool required, available at additional cost).

Finish: Finish shall be a Beacote V polyester powder-coat electro-statically applied and thermocured. Beacote V finish shall consist of a five stage iron phosphate chemical pretreatment regimen with a polymer primer sealer, oven dry off, and top coated with a thermoset super TGIC polyester pow¬der coat finish. The finish shall meet the AAMA 605.2 performance specification which includes passing a 3000 hour salt spray test for corrosion resistance and resists cracking or loss of adhesion per ASTM D522 and resists surface impacts of up to 160 inch-pound.

Limited Warranty: Beacon Products warrants its products, to the original purchaser, against defects in materials and workmanship for proper usage for a period of 5 years after date of production, when properly installed, maintained and appropriately specified. See Warranty Information on www.beaconproducts.com for complete details and exclusions.

2CC - 2" Cast Coupling

		arrangement (EPA index ft² / weight (lbs))									
shaft Ø		A	B	C	D	E	F	G	H	I	J
wall	weight	18	-	-	-	-	-	-	-	-	-
Ø4"	EPA	-	3.37	5.04	5.04	-	5.19	5.19	-	-	-
	weight	-	26	36	38	-	46	48	-	-	-
Ø5"	EPA	-	3.80	5.47	5.47	4.49	5.62	5.62	6.07	6.85	6.85
	weight	-	30	40	42	40	50	52	50	60	62
Ø6"	EPA	-	4.22	5.89	5.89	4.91	6.04	6.04	6.49	7.27	7.27
	weight	-	34	44	46	44	54	56	54	64	66

© 2022 HLI Solutions, Inc. All rights reserved. Information and specifications subject to change without notice. All values are design or typical values when measured under laboratory conditions.

Catalog Number: AA-00--18/4"MTC/BLS

Notes:

Type: A

SLA24-58713

BEACON design . performance . technology

Banner Arms

ARMS

DATE: LOCATION:

TYPE: PROJECT:

CATALOG #:

Banner Arm Mounting Styles

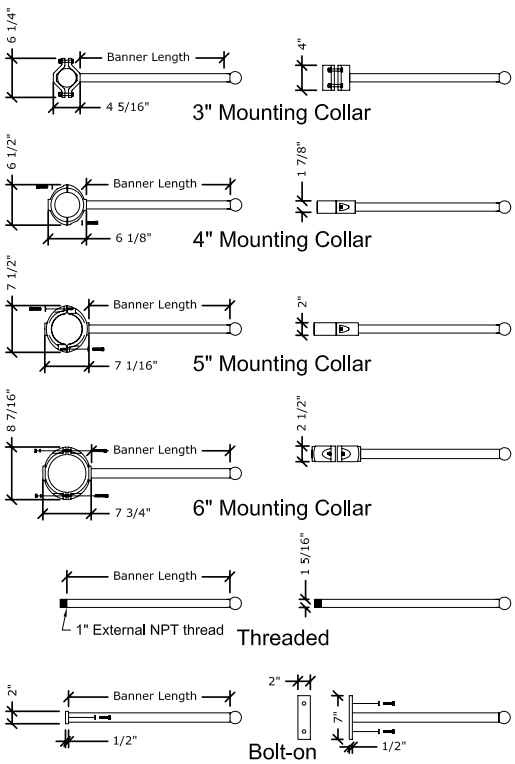

Specifications

Construction:
All cast aluminum parts shall low copper alloy A356. All extruded aluminum parts shall be alloy 6061-T6, 6063-T5 or equal.

Fasteners:
All fasteners shall be stainless steel. When tamper resistant fasteners are required, spanner HD (snake eye) style shall be provided (special tool required, available at additional cost), consult factory for availability.

Finish:
Finish shall be Beacote III polyester powdercoat electrostatically applied and thermocured. Poles shall be subjected to chemical pre-treatment prior to painting by immersion process.

Options

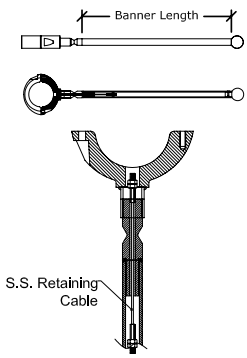

Breakaway Coupler System

breakaway speed varies with banner size (consult factory)

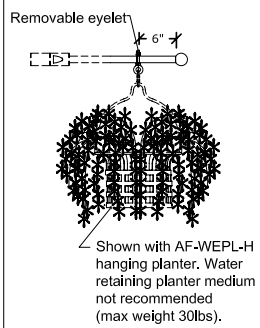

Planter Eyelet

Ordering Example:
AA-0024 / 4"MTC / BA / BKT

AA-00 ___ / _____ / ___ / ___ ____

Length		Mounting		Options		Finish	
☐	18" 18"	☐	3"MTC mounting collar for 3" shaft	☐	BA breakaway coupler system*	☐	BB black
☐	20" 20"	☐	4"MTC mounting collar for 4" shaft	☐	PA removable planter eyelet*	☐	BZ bronze
☐	22" 22"	☐	5"MTC mounting collar for 5" shaft	☐	2X two banner arms at 180°	☐	BG green
☐	24" 24"	☐	6"MTC mounting collar for 6" shaft			☐	BW white
☐	30" 30"	☐	BO bolted connection			☐	BY gray
		☐	TO threaded connection			☐	RAL RAL-
						☐	OTHER

Consult factory for premium and verde finishes. Custom colors available.

BLS - Black Gloss Smooth

Notes:
* Consult factory

© 2022 HLI Solutions, Inc. All rights reserved. Information and specifications subject to change without notice. All values are design or typical values when measured under laboratory conditions.

BEACON
design . performance . technology

Domus
POLES & BASES

DATE: LOCATION:

TYPE: PROJECT:

CATALOG #:

RSAB-BC-60-BLS-DOMU

	DOMU		*5*		*BBT*
Sample Ordering		/		/	
	A		**B**		**C**

DETAILS

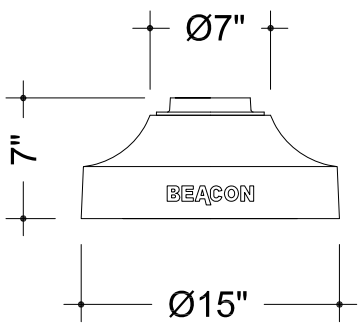

A. MODEL

DOMU	Domus

B. POST SHAFT DIAMETER

3	3"
4	4"
5	5"
6	6"

C. COLOR

BBT	basic black textured
BMT	black matte textured
WHT	white textured
MBT	metallic bronze textured
BZT	bronze textured
DBT	dark bronze textured
GYS	gray smooth
DPS	dark platinum smooth
GNT	green textured
MST	metallic silver textured
MTT	metallic titanium textured
OWI	old world iron
RAL	_____

BLS - Black Gloss Smooth

Construction: All cast aluminum parts shall be low copper alloy A356. All extruded aluminum parts shall be alloy 6061-T6, 6063-T5 or equal. Standard fluted shaft profile shall be 16-flat flutes for 3"OD and 12-flat flutes for 4", 5", & 6"OD.

Base Covers: require specification of smooth or fluted shafts of the size required to meet wind load requirements

Vibration Dampeners: Vibration dampener pads shall be provided when required by customer or deemed necessary by Beacon Products. Please consult factory for bridge mounted applications.

EPA (effective projected area): EPA is defined as (projected surface area X drag factor) and measured in ft2. Allowable post, luminaire arm, luminaire and accessory EPAs are derived from the most current published AASHTO (American Association of State Highway and Transportation Officials) standard, currently AASHTO 2001 (50yr design life). Customer assumes all responsibility for selecting the appropriate post for installation (consult factory for assistance). Luminaire arm, luminaire and accessory EPA must be equal to or less than allowable EPA of post. Consult a professional engineer for compliance with local codes and standards.

Anchor Bolt: Anchor bolts, sized as required, double hex nuts and flat washers shall be hot dipped galvanized steel. A bolt circle template shall be provided for installation.

Fasteners: All fasteners shall be Corrosion Resistant. When tamper resistant fasteners are required, spanner HD (snake eye) style shall be provided (special tool required, available at additional cost).

Finish: Finish shall be a Beacote V polyester powdercoat electrostatically applied and thermocured. Beacote V finish shall consist of a five stage iron phosphate chemical pretreatment regimen with a polymer primer sealer, oven dry off, and top coated with a thermoset super TGIC polyester powder coat finish. The finish shall meet the AAMA 605.2 performance specification which includes passing a 3000 hour salt spray test for corrosion resistance and resists cracking or loss of adhesion per ASTM D522 and resists surface impacts of up to 160 inch-pound.

Limited Warranty: Beacon Products warrants its products, to the original purchaser, against defects in materials and workmanship for proper usage for a period of 5 years after date of production, when properly installed, maintained and appropriately specified.

Due to our continued efforts to improve our products, product specifications are subject to change without notice.

© 2022 HLI Solutions, Inc. All rights reserved. Information and specifications subject to change without notice. All values are design or typical values when measured under laboratory conditions.

Attachment 14
Drawings

UNIVERSITY OF NEW ENGLAND
MARINE SCIENCE CENTER PIER

BIDDEFORD, MAINE

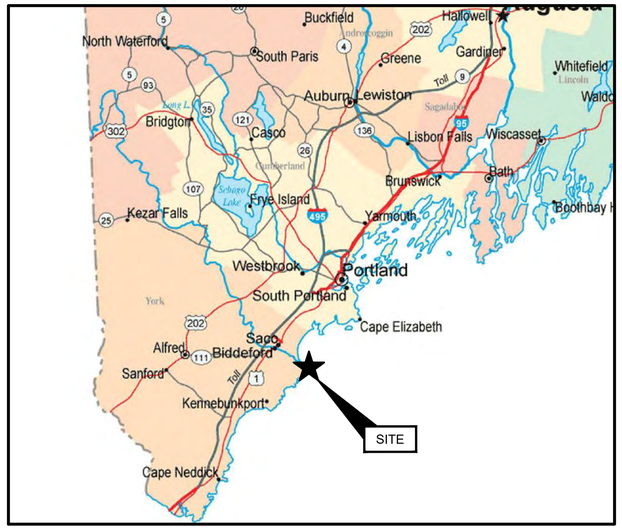

SOURCE:
MAINE ROAD MAP, GOOGLE IMAGES, ACCESSED SEPTEMBER 2023.

STATE MAP
(NOT TO SCALE)

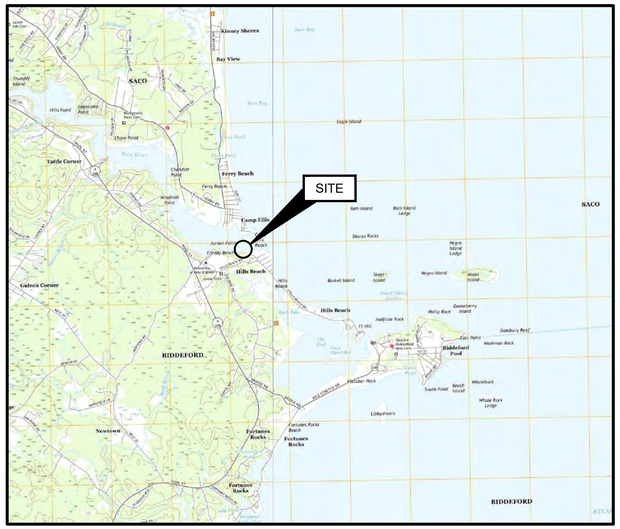

SOURCE:
USGS TOPOGRAPHICAL MAP OF BIDDEFORD, MAINE 2022

SITE LOCATION MAP
(NOT TO SCALE)

PROJECT INFO:

ZONING DISTRICT: INSTITUTIONAL (IN) ZONE WITH LIMITED RESIDENTIAL (LR) SHORELAND OVERLAY
EXISTING AND PROPOSED USE: MARINE RESEARCH CENTER
WATERSHED: SACO RIVER
WITHIN MS4 URBANIZED AREA: YES
WITHIN 100-YEAR FLOOD ZONE: NO
PUBLIC ROAD PROPOSED: NO
PRIVATE ROAD PROPOSED: YES
PUBLIC SEWER CONNECTION: YES, EXISTING
PUBLIC STORM DRAIN CONNECTION: NO

PERVIOUS COVERAGE: EXISTING= 105,843 SF
PROPOSED=95,194 SF

IMPERVIOUS COVERAGE: EXISTING=5,546 SF
PROPOSED=16,195 SF

BUILDING ROOF SQUARE FOOTAGE=751 WITHIN LIMIT OF DISTURBANCE

WAIVERS REQUESTED:
ARTICLE XI.II. SECTION 5.B.1.A. - SEE COVER LETTER
ARTICLE XI.II. SECTION 5.B.1.E.3. - SLOPES STEEPER THAN 2:1 IN LEDGE

811 DigSafe

THIS DOCUMENT, AND THE IDEAS AND DESIGNS INCORPORATED HEREIN, IS AN INSTRUMENT OF PROFESSIONAL SERVICE, IS THE PROPERTY OF GEI CONSULTANTS AND IS NOT TO BE USED, IN WHOLE OR IN PART, FOR ANY OTHER PROJECT WITHOUT THE WRITTEN AUTHORIZATION OF GEI CONSULTANTS.

PREPARED FOR:

UNIVERSITY OF NEW ENGLAND
11 HILLS BEACH ROAD
BIDDEFORD, MAINE
(207)283-0171

PREPARED BY:

GEI CONSULTANTS, INC.
5 MILK STREET
PORTLAND, ME 04101
(207)797-8901

GEI PROJECT NO. 2203703

SHEET INDEX

SHEET NO.	DRAWING NO.	TITLE
1	G-001	COVER SHEET
2	G-002	GENERAL NOTES
3	G-003	VICINITY PLAN
4	B-001	BORING LOCATION PLAN
5	B-002	BORING LOGS (1 OF 3)
6	B-003	BORING LOGS (2 OF 3)
7	B-004	BORING LOGS (3 OF 3)
8	B-005	INTERPRETIVE SUBSURFACE PROFILE
9	C-001	EXISTING CONDITIONS PLAN
10	C-002	DEMOLITION AND CONSTRUCTION STAGING
11	C-003	SITE PLAN
12	C-004	GRADING AND DRAINAGE PLAN
13	C-005	EROSION CONTROL PLAN
14	C-006	ACCESS ROAD PLAN AND PROFILE STA 1+00 TO MATCHLINE STA 4+00
15	C-007	ACCESS ROAD PLAN AND PROFILE MATCHLINE STA 4+00 TO STA 6+60
16	C-008	ACCESS ROAD TYPICAL SECTION
17	C-009	ACCESS ROAD SECTIONS 2+00 TO 3+75
18	C-010	ACCESS ROAD SECTIONS 4+00 TO 5+75
19	C-011	SITE DETAILS I
20	C-012	EROSION CONTROL NOTES
21	C-013	EROSION CONTROL DETAILS I
22	C-014	EROSION CONTROL DETAILS II
23	C-015	REVEGETATION PLAN
24	C-016	REVEGETATION NOTES, DETAILS AND SCHEDULES
25	S-001	PIER LAYOUT PLAN
26	S-002	PIER PLANS AND ELEVATIONS
27	S-003	TYPICAL PIER SECTIONS (1 OF 2)
28	S-004	TYPICAL PIER SECTIONS (2 OF 2)
29	S-005	PILE PLAN
30	S-006	PRECAST PILE CAP PLAN (1 OF 2)
31	S-007	PRECAST PILE CAP PLAN (1 OF 2)
32	S-008	PRECAST DECK PLANK PLAN
33	S-009	MISCELLANEOUS DETAILS (1 OF 5)
34	S-010	MISCELLANEOUS DETAILS (2 OF 5)
35	S-011	MISCELLANEOUS DETAILS (3 OF 5)
36	S-012	MISCELLANEOUS DETAILS (4 OF 5)
37	S-013	MISCELLANEOUS DETAILS (5 OF 5)
38	S-014	ABUTMENT DETAILS
39	F-001	FLOAT PLAN AND DETAILS

FOR PERMIT

NO.	DATE	ISSUE/REVISION	APP
7	4/16/2025	BIDDEFORD PERMIT APP.	DJB
6	9/17/2024	REVISED PERMIT SET	DJB
5	6/27/2024	REVISED PERMIT SET	DJB
4	9/14/2023	DEP PERMIT SET	DJB
3	6/28/2023	75% DESIGN SUBMISSION	DJB

STATE OF MAINE · DANIEL J. BANNON No. 13033 · LICENSED PROFESSIONAL ENGINEER · 4/16/2025

DWG. NO.
G-001

SHEET NO.
1 OF 39

BANNON, DAN \\geiconsultants.com\data\Data_Storage\Working\UNIVERSITY OF NEW ENGLAND\2203703 UNE Marine Science Center Pier\00_CAD\Design\Sheets\2203703-G-001.dwg - 4/16/2025

COORDINATION OF WORK:

1. THE CONTRACTOR SHALL SCHEDULE ALL ACTIVITIES SO AS TO LIMIT IMPACT TO MARINE AND LANDSIDE USES.
2. WORK SHALL BE COORDINATED WITH THE OWNER AND THEIR REPRESENTATIVES:

UNE:A:A:A:	ANDREW PHILIPPE	207-602-2365 (OFFICE)	207-400-6166 (CELL)
GEI:A:A:B:	DANIEL BANNON	207-347-2372 (OFFICE)	207-671-2583 (CELL)
SDA:A:A:C:	TOM SAUCIER	207-449-4275	

3. WORK IS SUBJECT TO THE FOLLOWING TIME OF YEAR AND TIMING OF ACTIVITY RESTRICTIONS:
   - TO BE DEFINED UPON PERMIT APPROVAL.
4. CONTRACTOR ACCESS TO THE SITE BY WATER SHALL AT NO TIME IMPACT USE OF THE ADJACENT FEDERAL NAVIGATION CHANNEL.
5. THE OWNER WILL PERMIT THE CONTRACTOR TO HAVE A LAYDOWN AREA ON THE UPLAND PROPERTY FOR USE DURING CONSTRUCTION. AN APPROXIMATE LAYDOWN AREA IS SHOWN ON SHEET C-005. THE FINAL LOCATION AND DIMENSIONS OF THE LAYDOWN AREA SHALL BE APPROVED BY THE OWNER.

SITE ENVIRONMENTAL CONTROLS:

1. ALL WORK SHALL BE PERFORMED IN COMPLIANCE WITH CITY, STATE, AND FEDERAL PERMITS. COPIES OF PERMIT APPROVALS ARE PROVIDED IN THE PROJECT MANUAL.

OSHA REQUIREMENTS:

1. PURSUANT TO 26 M.R.S.A. §565, THE CONTRACTOR SHALL ADHERE TO THE OCCUPATIONAL SAFETY AND HEALTH STANDARDS AS PROMULGATED BY THE FEDERAL OCCUPATIONAL SAFETY AND HEALTH ADMINISTRATION (OSHA) AT 29-CFR PART 1926 AS MOST RECENTLY AMENDED.

EROSION CONTROL:

1. EROSION AND SEDIMENTATION CONTROL MEASURES ARE PROPOSED TO CONTROL ACCELERATED EROSION AND SEDIMENTATION AND REDUCE ADVERSE IMPACTS FROM RUNOFF AND EROSION AT THE WORK SITE.
2. APPLICATION OF TEMPORARY AND PERMANENT EROSION CONTROL MEASURES SHALL BE IN ACCORDANCE WITH THE LATEST EDITION OF THE MAINE EROSION AND SEDIMENT CONTROL BMP'S PUBLISHED BY MAINE DEP AND AVAILABLE AT: HTTPS://WWW.MAINE.GOV/DEP/LAND/EROSION/ESCBMPS/
3. THE WORK SHALL BE PERFORMED BY A CONTRACTOR THAT IS CERTIFIED BY MAINE DEP IN EROSION AND SEDIMENT CONTROL MEASURES. A CERTIFIED INDIVIDUAL SHALL BE ONSITE DURING ALL CONSTRUCTION ACTIVITY.
4. EROSION AND SEDIMENTATION DUE TO RUNOFF, TIDAL EXPOSURE, AND WAVE ACTION SHALL BE CONTROLLED BY STAGING CONSTRUCTION ACTIVITY TO MINIMIZE AREA AND TIME OF DISTURBANCE, APPLICATION OF SILT FENCE, BARRIERS, AND OTHER EROSION CONTROL MEASURES, AND PRESERVING NATURAL VEGETATION WHENEVER POSSIBLE.
5. THE CONTRACTOR'S SEQUENCE OF OPERATIONS AND SCHEDULE FOR WORK ACTIVITIES SHALL ACT TO MINIMIZE EXPOSURE TO EROSION.
6. THE CONTRACTOR SHALL TAKE CARE TO LIMIT THE AREA OF SOIL DISTURBANCE TO THE MINIMUM NECESSARY TO COMPLETE THE WORK.
7. EROSION CONTROL MEASURES, SEEDING, AND VEGETATION SHALL BE INSPECTED WEEKLY AND AFTER RAINSTORMS, RUNOFF EVENTS, AND STORM EVENTS UNTIL FINAL ACCEPTANCE. REPAIRS SHALL BE MADE WHEN NO LONGER SERVICEABLE DUE TO DAMAGE OR ACCUMULATION OF SEDIMENT.
8. AT THE COMPLETION OF CONSTRUCTION, ALL DISTURBED AREAS SHALL BE RESTORED TO THEIR ORIGINAL CONDITION AND CONTOUR, UNLESS OTHERWISE INDICATED ON THE PLANS.

SITE PREPARATION:

1. CONTRACTOR SHALL INSTALL ALL SIGNAGE PRIOR TO INITIATION OF CONSTRUCTION ACTIVITIES. INCLUDE OWNER PROJECT SIGNAGE AND FEDERAL AND STATE MANDATED WORK PLACE SIGNAGE.
2. CONTRACTOR SHALL HAVE IN-PLACE TRASH AND SANITARY FACILITIES FOR THE WORK PLACE.
3. DISCOVERY OF INCONSISTENT SITE INFORMATION OR CONDITIONS ARE TO BE IMMEDIATELY CONVEYED TO THE OWNER AND ENGINEER PRIOR TO COMMENCING OR CONTINUING CONSTRUCTION.
4. THE CONTRACTOR SHALL NOTIFY DIG SAFE PRIOR TO COMMENCING ANY WORK.
5. LOCATIONS OF EXISTING UTILITIES SHOWN ARE APPROXIMATE. THE CONTRACTOR SHALL VERIFY LOCATIONS OF UTILITIES AS MAY BE REQUIRED. THE CONTRACTOR SHALL BE FULLY RESPONSIBLE FOR ANY AND ALL DAMAGES OCCURRING AS A RESULT OF THE CONTRACTOR'S FAILURE TO LOCATE AND PROTECT UNDERGROUND UTILITIES. ALL REPAIRS SHALL BE MADE AT THE CONTRACTOR'S EXPENSE.
6. CONTRACTOR SHALL MAINTAIN AND PROTECT ALL EXISTING UTILITIES AND DRAINAGE AT ALL TIMES. THE CONTRACTOR SHALL REPAIR ANY DAMAGE AND RESTORE TO THE PRE-EXISTING CONDITION AT NO COST TO THE OWNER.
7. CONTRACTOR SHALL PROTECT ALL EXISTING STRUCTURES AND SHALL PERFORM THE WORK IN A MANNER THAT AVOIDS DAMAGE TO EXISTING STRUCTURES. STRUCTURES INCLUDE, BUT ARE NOT LIMITED TO, BUILDINGS, PIERS, BULKHEADS, FLOATS, PIER UTILITIES AND FIXTURES, AND RIPRAP SLOPES. CONTRACTOR SHALL REPAIR ANY DAMAGE AT NO ADDITIONAL COST TO THE CITY.
8. CONTRACTOR SHALL SUPPLY ALL NECESSARY TEMPORARY UTILITIES FOR CONSTRUCTION INCLUDING, BUT NOT LIMITED TO; WATER, POWER, LIGHTING, DATA, AND TELEPHONE.
9. CONTRACTOR SHALL READ AND UNDERSTAND ALL REGULATORY CONDITIONS ASSOCIATED WITH THE PROJECT AND SHALL COMPLY WITH ALL ENVIRONMENTAL REQUIREMENTS AND PERMIT CONDITIONS.
10. CONTRACTOR SHALL PROVIDE A CONFINED CONCRETE TRUCK WASHDOWN AREA AT A LOCATION TO BE APPROVED BY THE ENGINEER. WASHDOWN AREA SHALL INCLUDE PROTECTION TO PAVEMENT, A PERIMETER WALL AND A FILTER FABRIC LINER. NO RUNOFF CONTAINING CEMENT OR OTHER SUSPENDED SOLIDS WILL BE PERMITTED. ALL MATERIALS SHALL BE COMPLETELY REMOVED UPON COMPLETION OF CONSTRUCTION AND DISPOSED OF AT AN APPROVED DISPOSAL LOCATION.

CODES:

1. MAINE DOT STANDARD SPECIFICATIONS, MARCH 2020 ED. WITH SUPPLEMENTAL SPECIFICATIONS THROUGH JUNE 16,2023.
2. MAINE UNIFORM BUILDING AND ENERGY CODE (MUBEC).
3. AMERICAN CONCRETE INSTITUTE (ACI) 318-14: BUILDING CODE REQUIREMENTS FOR STRUCTURAL CONCRETE, 2014 ED.
4. CONCRETE REINFORCING STEEL INSTITUTE (CRSI):
5. AMERICAN INSTITUTE FOR STEEL CONSTRUCTION (AISC) STEEL CONSTRUCTION MANUAL, 15TH ED.
6. ALUMINUM ASSOCIATION, ALUMINUM DESIGN MANUAL, 2015 ED.
7. AMERICAN WOOD COUNCIL, NATIONAL DESIGN SPECIFICATIONS (NDS) FOR WOOD CONSTRUCTION, 2015 ED.

SITE CONTROL AND BASELINES:

1. PROJECT BASE PLAN HAS BEEN DEVELOPED FROM A COMPILATION OF MULTIPLE SURVEYS AS DESCRIBED UNDER "SURVEY AND PROPERTY NOTES".
2. ELEVATIONS ARE PROVIDED IN NAVD88 VERTICAL DATUM UNLESS OTHERWISE NOTED.
3. THE CONTRACTOR SHALL INSTALL SURVEY CONTROL AS NECESSARY TO PERFORM THE WORK. PERMANENT SURVEY CONTROL (AT LEAST 2 POINTS) SHALL BE ESTABLISHED FOR THE PROJECT AND PROTECTED FROM DAMAGE DURING CONSTRUCTION AND PROVIDED ON AS-BUILT DRAWINGS.
4. THE CONTRACTOR SHALL ESTABLISH AND MAINTAIN PROJECT BASELINES AND CONTROL AS REQUIRED TO ENSURE ACCURATE LOCATION OF ALL ELEMENTS OF THE PROJECT.

SURVEY AND PROPERTY NOTES:

1. LOCUS PARCEL IS DEPICTED ON CITY OF BIDDEFORD, TAX MAP 52, LOT 4 AND IS LOCATED IN THE INSTITUTIONAL (IN) ZONE. A PORTION OF THE SITE IS LOCATED IN THE LIMITED RESIDENTIAL (LR) SHORELAND OVERLAY DISTRICT.
2. THE RECORD OWNER IS THE UNIVERSITY OF NEW ENGLAND, BY DEED DATED APRIL 18, 1962, RECORDED IN THE YORK COUNTY REGISTRY OF DEEDS IN BOOK 1484, PAGE 0145.
3. UPLAND TOPOGRAPHY AND BASE SURVEY INFORMATION DEPICTED HEREON ARE BASED ON THE FOLLOWING SURVEYS:
   - "TOPOGRAPHIC SURVEY, MARINE SCIENCE CENTER, UNIVERSITY OF NEW ENGLAND" BY OWEN HASKELL, INC. DATED DEC. 13, 2022.
   - "TOPOGRAPHIC SURVEY AT MARINE SCIENCE CENTER" BY STATEWIDE SURVEYS, INC., DATED MAY 4, 2015.
4. HYDROGRAPHIC DATA DEPICTED HEREON IS BASED ON 2022 SURVEY BY OWEN HASKELL SURVEY.
5. FEDERAL CHANNEL LIMITS ARE DEPICTED BASED ON THE PLAN. "SACO RIVER, SACE AND BIDDEFORD, MAINE, CONDITION SURVEY" PUBLISHED BY THE U.S. ARMY CORPS OF ENGINEERS, DATED JULY 3, 2021.
6. HORIZONTAL COORDINATES ARE BASED ON NAD83 MAINE STATE PLANE WEST ZONE-1801 AND ARE EXPRESSED IN FEET. ELEVATIONS ARE BASED ON NAVD88 VERTICAL DATUM AND CONTROL POINTS PROVIDED BY UNE.
7. UTILITY INFORMATION DEPICTED HEREON IS BASED ON FEBRUARY 2023 UTILITY LOCATION SURVEY PERFORMED BY BLOOD HOUND, LLC UNDERGROUND UTILITY LOCATORS AND MAY NOT NECESSARILY REPRESENT ALL EXISTING UTILITIES. CONTACT DIG SAFE (1-888-DIG-SAFE) AND VERIFY EXISTING UTILITIES PRIOR TO ANY CONSTRUCTION OR EXCAVATION.
8. PORTIONS OF THE PROPERTY ARE DEPICTED AS BEING IN A SPECIAL FLOOD HAZARD AREA BASED ON FEMA PRELIMINARY FIRM 23031C0459G DATED APRIL 14, 2017. THE SITE IS LOCATED IN A VE ZONE HAVING BASE FLOOD ELEVATION OF 14 FT NAVD88.
9. SUBSURFACE INFORMATION IS BASED ON EXPLORATIONS PERFORMED IN 2015 AND 2022 CONSISTING OF BORINGS, PROBES, AND TEST PITS. REFER TO SHEETS B-001 - B-005 FOR SUBSURFACE INFORMATION.

CONCRETE

1. CAST IN PLACE CONCRETE SHALL CONFORM TO THE FOLLOWING SPECIFICATIONS BASED ON THE MAINE DOT STANDARD SPECIFICATION:

LOCATION	MDOT CLASS	f'c
ALL CONCRETE	CLASS LP	5,000 PSI

2. ALL REINFORCEMENT SHALL BE NEW DEFORMED BARS, GRADE 60 CONFORMING TO ASTM A615, HOT DIP GALVANIZED ACCORDING TO ASTM A767/A767M OR ASTM A1094/A1094M.
3. REINFORCEMENT ACCESSORIES SHALL BE DIELECTRIC COATED STEEL OR APPROVED PLASTIC.
3. GROUT SHALL BE A HIGH STRENGTH, NON-SHRINK GROUT WITH SALT WATER RESISTANCE.
4. CONCRETE COVER SHALL BE A MINIMUM OF 3 INCHES UNLESS NOTED OTHERWISE.
5. ALL EXPOSED EDGES OF CONCRETE AT COLD JOINTS SHALL HAVE A ROUGHENED FINISH AND BE COATED WITH EPOXY BONDING AGENT PRIOR TO CASTING ADJACENT POUR.
6. PROVIDE 1 INCH CHAMFER ON ALL EXPOSED EDGES UNLESS NOTED OR DIRECTED OTHERWISE.
7. TOP SURFACE OF EXPOSED CONCRETE SHALL RECEIVE A BROOM FINISH.
8. COAT FINISHED SURFACES OF CONCRETE WITH A 100% SILANE PENETRATING CONCRETE SEALER SUITABLE FOR USE IN A MARINE ENVIRONMENT. SEALER SHALL BE LISTED ON THE MAINE DOT QUALIFIED PRODUCTS LIST.
9. REINFORCEMENT DEVELOPMENT AND LAP SPLICE LENGTHS SHALL BE IN ACCORDANCE WITH ACI 318.
10. CONCRETE MIX DESIGN SHALL INCLUDE THE USE OF CORROSION INHIBITING ADMIXTURE AT DOSAGE SUITABLE FOR USE IN AN AGGRESSIVE MARINE ENVIRONMENT. CORROSION INHIBITOR SHALL BE LISTED ON THE MAINE DOT QUALIFIED PRODUCTS LIST.

EPOXY ANCHORS

1. ANCHOR ROD, WASHERS, AND NUTS SHALL CONFORM TO ASTM F1554, GRADE 36, AND SHALL BE HOT DIP GALVANIZED.
2. THE MINIMUM EDGE DISTANCE AND MINIMUM SPACING FOR ALL ANCHORS SHALL BE 6 BOLT DIAMETERS.
3. ALL HOLES SHALL BE DRILLED TO THE RECOMMENDED DIAMETER PER MANUFACTURERS REQUIREMENTS USING CARBIDE DRILL BITS MEETING ANSI B212.5-1994.
4. HOLES SHALL BE BRUSHED WITH NYLON BRUSH AND BLOWN CLEAN USING OIL-FREE COMPRESSED AIR A MINIMUM OF TWO TIMES.
5. ALL HOLES SHALL BE FREE OF STANDING WATER BEFORE INSTALLING ANCHORS.
6. EPOXY SHALL HAVE MINIMUM BOND STRENGTH OF 1,600 PSI @ 14 DAYS.

EARTHWORK

1. EARTHWORK MATERIALS SHALL MEET THE FOLLOWING SPECIFICATIONS:

AGGREGATE BASE	TYPE A (MDOT 703.06A)
AGGREGATE SUBBASE	TYPE D (MDOT 703.06C)
WALL BACKFILL	CRUSHED STONE ¾" (MDOT 703.13)
DRAINAGE STONE	CRUSHED STONE 2 INCH (MDOT 703.31)
ORDINARY BORROW	SEE #2 BELOW.

2. ORDINARY BORROW SHALL BE EXISTING GRANULAR SOIL WITH MAXIMUM 4 INCH STONE SUBJECT TO APPROVAL BY THE ENGINEER. ALL DEBRIS OR OTHER DELETERIOUS MATERIALS SHALL BE REMOVED FROM ORDINARY BORROW PRIOR TO REUSE.

STEEL

1. STEEL ANGLE, STRAPS, AND MISCELLANEOUS FABRICATIONS SHALL BE ASTM A36 HOT DIP GALVANIZED AFTER FABRICATION, UNLESS OTHERWISE NOTED.
2. ALL FASTENERS SHALL BE HOT-DIP GALVANIZED OR STAINLESS STEEL.
3. ALL BOLTS SHALL CONFORM TO ASTM A307. MINIMUM SIZE SHALL BE ⅝ INCH UNLESS OTHERWISE NOTED.

HEAVY TIMBER

1. UNLESS OTHERWISE SPECIFIED, ALL TIMBER FRAMING TO BE USED SHALL BE NO. 1 AND BETTER SOUTHERN PINE AS GRADED BY SPIB AND WITH DESIGN VALUES PER NDS 2015.
2. ALL TIMBER SHALL BE NEW AND SUPPLIED WITH NOMINAL DIMENSIONS UNLESS OTHERWISE NOTED.
3. ALL NEW SOUTHERN YELLOW PINE TIMBER MEMBERS TO WHICH THE PUBLIC MAY BE EXPOSED SHALL BE TREATED WITH ALKALINE COPPER QUATERNARY (ACQ) IN ACCORDANCE WITH AWPA & AWPB W/ MINIMUM RETENTION OF 0.60 LBS. PER CUBIC FOOT. ALL OTHER SOUTHERN YELLOW PINE MEMBERS SHALL BE CCA TREATED TO 2.5 PCF RETENTION.
4. ALL EXPOSED EDGES SHALL BE PLANED OR SANDED TO PROVIDE SMOOTH SURFACE FREE OF ROUGH EDGES OR DEFECTS.
5. ALL EXPOSED FASTENERS SHALL BE COUNTERSUNK.
6. DOCK WASHERS SHALL BE PROVIDED BENEATH NUT OR BOLT HEAD OF ALL TIMBER BOLTED CONNECTIONS. TIMBER BOLTS SHALL BE CONSIDERED AN ACCEPTABLE ALTERNATIVE TO HEX HEADED BOLTS WITH DOCK WASHERS.
7. STANDARD WASHERS SHALL BE PERMISSIBLE WHERE CONNECTED PARTS INCLUDE STEEL PLATES, ANGLES, BRACKETS, OR BACKER PLATES.

TIMBER PILES

1. TIMBER PILES SHALL BE TROPICAL GREENHEART AND SHALL CONFORM TO ASTM D25.
2. PROVIDE PROTECTION TO PILE TIP AND BUTT TO AVOID DAMAGE DURING DRIVING.
3. PILES SHALL BE ORDERED MINIMUM 5 FT LONGER THAN TABULATED LENGTHS TO ALLOW FOR INSTALLATION VARIABILITY AND CUTOFF.
4. ALL TIMBER PILES SHALL BE DRIVEN TO THE MINIMUM EMBEDMENT OR CAPACITY CRITERIA INDICATED IN THE PILE SCHEDULE. FENDER PILES MAY BE INSTALLED TO THE REQUIRED DEPTH USING A VIBRATORY HAMMER. IN THE EVENT THAT A VIBRATORY HAMMER IS UNABLE TO ACHIEVE THE MINIMUM REQUIRED EMBEDMENT, THE CONTRACTOR WILL BE RESPONSIBLE FOR COMPLETING FINAL SET USING AN IMPACT HAMMER.
5. GREENHEART PILES SHALL BE BANDED WITH 1½ INCH STAINLESS STEEL UTILITY STRAPPING PRIOR TO CUTOFF. REFER TO DETAIL ON SHEET S-009.

ASPHALT

1. PAVING GRADES SHALL PITCH TO EXISTING STRUCTURES.
2. PAVEMENT SHALL CONSIST OF 4" OF HOT MIX ASPHALT PLACED IN TWO COURSES, SEE DETAIL.
3. CONTRACTOR TO SAW CUT PAVEMENT AT LIMIT OF REMOVAL.
4. CONTRACTOR TO PROVIDE SMOOTH TRANSITIONS BETWEEN NEW AND EXISTING ASPHALT.
5. CONTRACTOR TO SEAL JOINT BETWEEN NEW AND EXISTING ASPHALT WITH BITUMINOUS JOINT SEALANT.

GEOTEXTILE

1. GEOTEXTILE SEPARATION FABRIC SHALL BE MIRAFI FW700 OR EQUIVALENT.
2. OVERLAP ALL SEAMS MINIMUM 2 FT.
3. INSTALL PER MANUFACTURERS RECOMMENDATIONS.

STEEL PIPE PILES

1. STEEL PIPE PILES SHALL CONFORM TO ASTM A252, GRADE 3.
2. ALL PILES SHALL BE SEAMLESS.
3. AN OPEN CUTTING SHOE IS REQUIRED.
4. PIPE PILES SHALL BE COATED WITH FUSION BONDED EPOXY, COLOR BROWN. MINIMUM COATING THICKNESS SHALL BE 18-20 MIL. COATING SHALL EXTEND FROM TOP OF PILE DOWN TO MINIMUM 5-FEET BELOW GRADE.
5. DAMAGE TO ANY STEEL COATING SHALL BE TOUCHED UP BY THE CONTRACTOR USING APPROVED MATERIALS AND METHODS.
6. ALL PILES SHALL BE FILLED TO THE TOP WITH CONCRETE AFTER INSTALLATION. ROCK-SOCKETED PILES SHALL BE CLEANED OUT AND FILLED FOR THEIR ENTIRE LENGTH PRIOR TO CONCRETE FILLING. DRIVEN PILES SHALL BE CLEANED OUT TO MINIMUM 10-FEET BELOW ADJACENT MUDLINE.
7. REFER TO PILE SCHEDULE ON SHEET S-005 FOR ESTIMATED PILE LENGTHS, COATING LENGTHS, SIZES, AND SOCKETING REQUIREMENTS.

TIMBER FLOATS

1. FLOAT MANUFACTURER SHALL SUBMIT SHOP DRAWINGS AND CALCULATIONS SIGNED AND SEALED BY A MAINE LICENSED PROFESSIONAL ENGINEER. MANUFACTURER SHALL BE RESPONSIBLE FOR FINAL DETERMINATION OF FLOAT FRAMING AND DRUM LAYOUT TO MEET BOUYANCY, LOADING, AND ENVIRONMENTAL EXPOSURE REQUIREMENTS IN ACCORDANCE WITH THE SPECIFICATIONS.
2. UNLESS OTHERWISE SPECIFIED, ALL TIMBER TO BE USED SHALL BE NO. 1 AND BETTER SOUTHERN PINE AS GRADED BY SPIB AND WITH DESIGN VALUES PER NFPA NATIONAL DESIGN SPECIFICATION OR THE EQUIVALENT FOR DOUGLAS FIR AS GRADED BY WCLIB AND WWPA.
3. ALL TIMBER SHALL BE NEW AND SUPPLIED WITH NOMINAL DIMENSIONS.
4. ALL TIMBER MEMBERS TO WHICH THE PUBLIC MAY BE EXPOSED SHALL BE TREATED WITH ALKALINE COPPER QUATERNARY (ACQ) IN ACCORDANCE WITH AWPA & AWPB W/ MINIMUM RETENTION OF 0.40 LBS. PER CUBIC FOOT. ALL OTHER SOUTHERN YELLOW PINE MEMBERS SHALL BE CCA TREATED TO 2.5 PCF RETENTION.
5. DECKING SHALL BE NO. 1 SOUTHERN PINE, MINIMUM SIZE 2X6.
6. MISC. HARDWARE: GALVANIZED STEEL PLATES AND ALL BOLTS AND RELATED HARDWARE SHALL BE FASHIONED FROM STEEL AND GALVANIZED AFTER FABRICATION AND IN ACCORDANCE WITH REQUIREMENTS OF ASTM A123, AND/OR A153. BOLTS AND NUTS SHALL CONFORM TO ASTM A307.
7. CONNECTION HARDWARE SHALL BE FABRICATED FROM ASTM-A36 GRADE STEEL WITH MINIMUM THICKNESS ¼".
8. PROVIDE GUIDE/WEARING BRACKETS AT GANGWAY LANDING ON FLOAT 'C' PER DETAIL A ON SHEET S-012. BRACKETS SHALL BE LOCATED IN FIELD TO BE CENTERED ON GANGWAY RANGE OF TRAVEL AT MID-TIDE ELEVATION.
9. TRANSITIONS BETWEEN FLOATING DOCKS SHALL INCLUDE ADA COMPLIANT TRANSITION PLATES ACROSS GAPS AT HINGE LOCATIONS.
10. FLOATING DOCKS SHALL MEET THE FOLLOWING LOADING AND FREEBOARD CRITERIA:

DEAD LOAD	20 INCH FREEBOARD
20 PSF UNIFORM LIVE LOAD	MINIMUM 8 INCH FREEBOARD
40 PSF UNIFORM LIVE LOAD	MINIMUM ZERO FREEBOARD

DEAD LOADS SHALL INCLUDE ALL COMPONENTS AND ATTACHMENTS INCLUDING WEIGHT OF ALUMINUM GANGWAY BEARING ON FLOAT 'C'.

ALUMINUM GANGWAY

1. GANGWAY MANUFACTURER SHALL SUBMIT SHOP DRAWINGS AND CALCULATIONS SIGNED AND SEALED BY A MAINE LICENSED PROFESSIONAL ENGINEER. MANUFACTURER SHALL BE RESPONSIBLE FOR FINAL DETERMINATION OF GANGWAY FRAMING AND CONFIGURATION TO MEET STRUCTURAL, PERFORMANCE, AND ACCESSIBILITY REQUIREMENTS IN ACCORDANCE WITH THE SPECIFICATIONS.
2. GANGWAY SHALL MEET THE FOLLOWING LOADING AND DEFLECTION CRITERIA:
   - DEAD LOAD SHALL CONSIST OF WEIGHT OF THE ENTIRE GANGWAY STRUCTURE PLUS ANY UTILITIES AND ATTACHMENTS.
   - ALLOWABLE STRESSES IN DECK SURFACE, GANGWAY FRAMING, AND MOUNTING COMPONENTS SHALL NOT BE EXCEEDED AT A UNIFORM LIVE LOAD OF 100 PSF.
   - 50 PSF UNIFORM LIVE LOAD MAX. DEFLECTION L/360
   - 100 PSF UNIFORM LIVE LOAD MAX. DEFLECTION NOT TO EXCEED GANGWAY CAMBER
   - ALL HANDRAIL AND POSTS SHALL BE DESIGNED TO WITHSTAND A 200 LB LOAD APPLIED IN ANY DIRECTION OR A 50 LB/FT LOAD APPLIED ALONG THE HANDRAIL LENGTH.
3. GANGWAY HINGES SHALL BE CAPABLE OF TRAVELING FREELY AND WITHOUT BINDING THROUGH THE ENTIRE RANGE OF WATER LEVELS FROM MLLW TO BASE FLOOD ELEVATION PLUS TWO-FEET OF ADDITIONAL ELEVATION IN EITHER DIRECTION.

FOR PERMIT

Attention:
0 1"
If this scale bar does not measure 1" then drawing is not original scale.

STATE OF MAINE
DANIEL J. BANNON
No. 13033
LICENSED PROFESSIONAL ENGINEER
4/16/2025

Designed:	DJB
Drawn:	JAM
Checked:	BJB
Approved:	BMM
P.E. No:	13033
GEI Project	2203703

GEI Consultants
GEI CONSULTANTS, INC.
5 MILK STREET
PORTLAND, ME 04101
(207)797-8901

UNE
UNIVERSITY OF NEW ENGLAND
11 HILLS BEACH RD.
BIDDEFORD, MAINE

UNIVERSITY OF NEW ENGLAND MARINE SCIENCE CENTER PIER

11 HILLS BEACH ROAD
BIDDEFORD, YORK COUNTY, MAINE

NO	DATE	ISSUE/REVISION	APP
7	4/16/2025	BIDDEFORD PERMIT APP.	DJB
6	9/17/2024	REVISED PERMIT SET	DJB
5	6/27/2024	REVISED PERMIT SET	DJB
4	9/14/2023	DEP PERMIT SET	DJB
3	6/28/2023	75% DESIGN SUBMISSION	DJB
2	2/15/2023	30% DESIGN SUBMISSION	DJB
1	12/9/2022	15% DESIGN SUB REV	DJB
0	11/11/2022	15% DESIGN SUBMISSION	DJB

SHEET NAME: **GENERAL NOTES**

SHEET NO.: **G-002**

BANNON, DAN \\geiconsultants.com\data\Data_Storage\Working\UNIVERSITY OF NEW ENGLAND\2203703 UNE Marine Science Center Pier\00_CAD\Design\Sheets\2203703-G-002.dwg - 4/16/2025



0 200 400
SCALE, FEET

FOR PERMIT

Attention:
0 1"
If this scale bar does not measure 1" then drawing is not original scale.

STATE OF MAINE
DANIEL J. BANNON
No. 13033
LICENSED PROFESSIONAL ENGINEER
4/16/2025

Designed:	DJB
Drawn:	JAM
Checked:	BJB
Approved:	BMM
P.E. No:	13033
GEI Project	2203703

GEI Consultants
GEI CONSULTANTS, INC.
5 MILK STREET
PORTLAND, ME 04101
(207)797-8901

UNE
UNIVERSITY OF NEW ENGLAND
11 HILLS BEACH RD.
BIDDEFORD, MAINE

UNIVERSITY OF NEW ENGLAND MARINE SCIENCE CENTER PIER

11 HILLS BEACH ROAD
BIDDEFORD, YORK COUNTY, MAINE

NO	DATE	ISSUE/REVISION	APP
7	4/16/2025	BIDDEFORD PERMIT APP.	DJB
6	9/17/2024	REVISED PERMIT SET	DJB
~~5~~	~~6/27/2024~~	~~REVISED PERMIT SET~~	~~DJB~~
4	9/14/2023	DEP PERMIT SET	DJB
3	6/28/2023	75% DESIGN SUBMISSION	DJB
2	2/15/2023	30% DESIGN SUBMISSION	DJB
1	12/9/2022	15% DESIGN SUB REV	DJB
0	11/11/2022	15% DESIGN SUBMISSION	DJB

SHEET NAME
VICINITY PLAN

SHEET NO.
G-003

BANNON, DAN \\geiconsultants.com\data\Data_Storage\Working\UNIVERSITY OF NEW ENGLAND\2203703 UNE Marine Science Center Pier\00_CAD\Design\Sheets\2203703-G-003.dwg - 4/16/2025

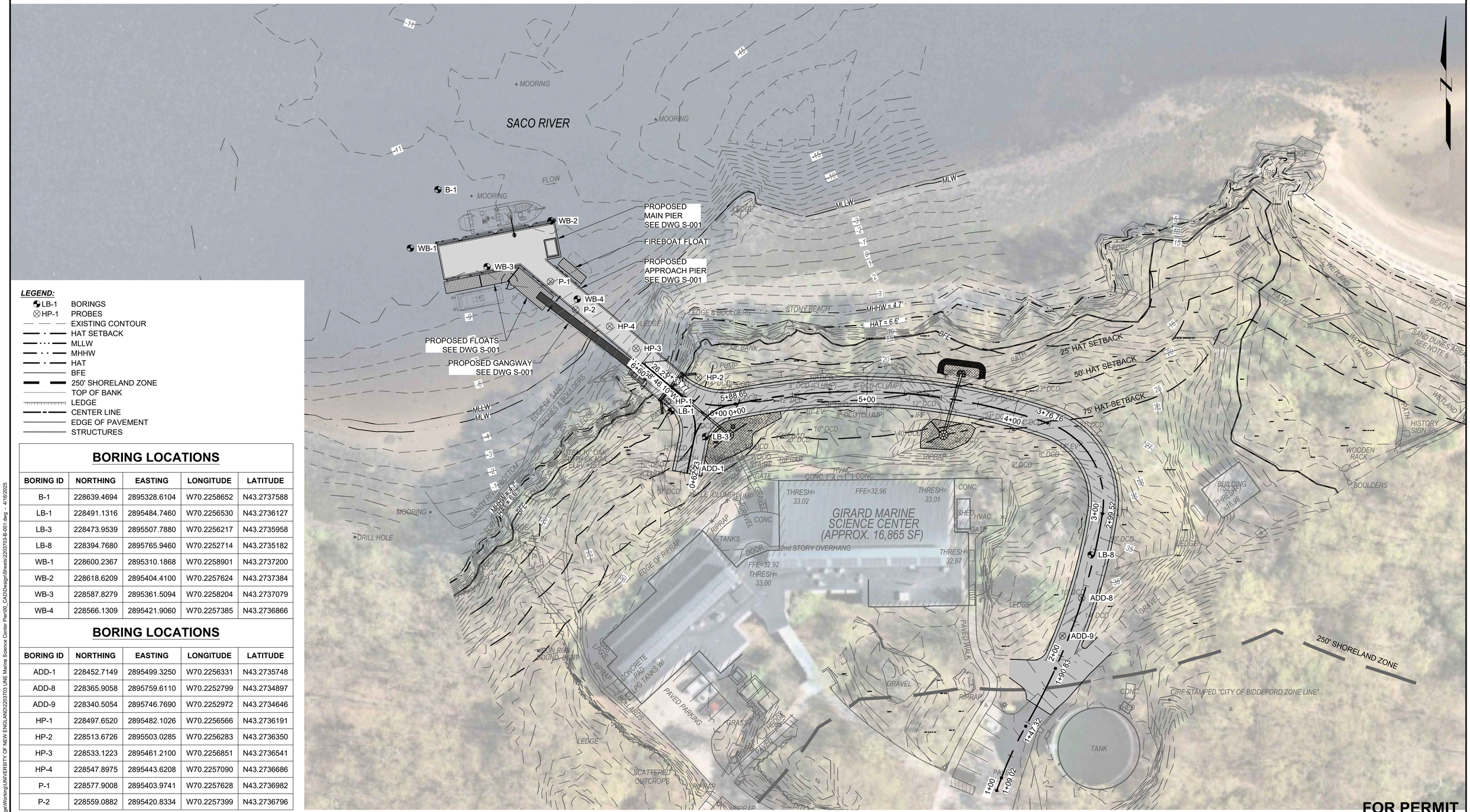

LEGEND:

- LB-1 BORINGS
- HP-1 PROBES
- EXISTING CONTOUR
- HAT SETBACK
- MLLW
- MHHW
- HAT
- BFE
- 250' SHORELAND ZONE
- TOP OF BANK
- LEDGE
- CENTER LINE
- EDGE OF PAVEMENT
- STRUCTURES

BORING LOCATIONS

BORING ID	NORTHING	EASTING	LONGITUDE	LATITUDE
B-1	228639.4694	2895328.6104	W70.2258652	N43.2737588
LB-1	228491.1316	2895484.7460	W70.2256530	N43.2736127
LB-3	228473.9539	2895507.7880	W70.2256217	N43.2735958
LB-8	228394.7680	2895765.9460	W70.2252714	N43.2735182
WB-1	228600.2367	2895310.1868	W70.2258901	N43.2737200
WB-2	228618.6209	2895404.4100	W70.2257624	N43.2737384
WB-3	228587.8279	2895361.5094	W70.2258204	N43.2737079
WB-4	228566.1309	2895421.9060	W70.2257385	N43.2736866

BORING LOCATIONS

BORING ID	NORTHING	EASTING	LONGITUDE	LATITUDE
ADD-1	228452.7149	2895499.3250	W70.2256331	N43.2735748
ADD-8	228365.9058	2895759.6110	W70.2252799	N43.2734897
ADD-9	228340.5054	2895746.7690	W70.2252972	N43.2734646
HP-1	228497.6520	2895482.1026	W70.2256566	N43.2736191
HP-2	228513.6726	2895503.0285	W70.2256283	N43.2736350
HP-3	228533.1223	2895461.2100	W70.2256851	N43.2736541
HP-4	228547.8975	2895443.6208	W70.2257090	N43.2736686
P-1	228577.9008	2895403.9741	W70.2257628	N43.2736982
P-2	228559.0882	2895420.8334	W70.2257399	N43.2736796

ELEVATION	MLLW	NAVD88*
BFE	+19.0	+14.0
HAT	+11.6	+6.6
MHHW	+9.7	+4.7
MHW	+9.3	+4.3
MSL	+4.8	-0.2
MLW	+0.3	-4.7
MLLW	0.0	-5.0

*PROJECT DATUM

0 30 60
SCALE, FEET

Attention:
0 1"
If this scale bar does not measure 1" then drawing is not original scale.

STATE OF MAINE
DANIEL J. BANNON
No. 13033
LICENSED PROFESSIONAL ENGINEER
4/16/2025

Designed:	DJB
Drawn:	JAM
Checked:	BJB
Approved:	BMM
P.E. No:	13033
GEI Project	2203703

GEI Consultants
GEI CONSULTANTS, INC.
5 MILK STREET
PORTLAND, ME 04101
(207)797-8901

UNE
UNIVERSITY OF NEW ENGLAND
11 HILLS BEACH RD.
BIDDEFORD, MAINE

UNIVERSITY OF NEW ENGLAND MARINE SCIENCE CENTER PIER

11 HILLS BEACH ROAD
BIDDEFORD, YORK COUNTY, MAINE

NO	DATE	ISSUE/REVISION	APP
7	4/16/2025	BIDDEFORD PERMIT APP.	DJB
6	9/17/2024	REVISED PERMIT SET	DJB
5	6/27/2024	REVISED PERMIT SET	DJB
4	9/14/2023	DEP PERMIT SET	DJB
3	6/28/2023	75% DESIGN SUBMISSION	DJB
2	2/15/2023	30% DESIGN SUBMISSION	DJB
1	12/9/2022	15% DESIGN SUB REV	DJB
0	11/11/2022	15% DESIGN SUBMISSION	DJB

SHEET NAME
BORING LOCATION PLAN

SHEET NO.
B-001

FOR PERMIT

BANNON, DAN \\geiconsultants.com\data\Data_Storage\Working\UNIVERSITY OF NEW ENGLAND\2203703 UNE Marine Science Center Pier\00_CAD\Design\Sheets\2203703-B-001.dwg - 4/16/2025

TEST BORING LOG

GZA GeoEnvironmental, Inc. *Engineers and Scientists*

University of New England
Marine Science Center Pier
Biddeford, Maine

EXPLORATION NO.: B-1
SHEET: 1 of 3
PROJECT NO: 09.0025897.00
REVIEWED BY:

Logged By: B. Cardali
Drilling Co.: New England Boring
Foreman: Brad Enos

Type of Rig: Barge
Rig Model:
Drilling Method: Drive and Wash

Boring Location: See Plan
Ground Surface Elev. (ft.): ~10.6
Final Boring Depth (ft.): 65.8
Date Start - Finish: 11/9/2015 - 11/10/2015

H. Datum:
V. Datum: NAVD 88

Hammer Type: Safety
Hammer Weight (lb.): 140
Hammer Fall (in.): 30
Auger or Casing O.D./I.D Dia (in.):

Sampler Type: SS
Sampler O.D. (in.): 2.0
Sampler Length (in.): 24
Rock Core Size: NQ

Groundwater Depth (ft.)

Date	Time	Water Depth	Stab. Time

Depth (ft.)	Casing Blows/ Core Rate	No.	Sample Depth (ft.)	Sample Pen. (in)	Sample Rec. (in)	Sample Blows (per 6 in.)	SPT Value	Sample Description and Identification (Modified Burmister Procedure)	Remarks	Field Test Data	Depth (ft.)	Stratum Description	Elev. (ft.)
												GLACIAL TILL	
											61.6		-73.2
		C-1	61.6-61.7	32	32			C-1: Hard, fresh, fine grained, gray, GNEISS. Joints are very close to closely spaced, moderately dipping, planar, rough, fresh to discolored. RQD = 31%	3			GNEISS	
65		C-2	64.3-65.8	18	18			C-2: Hard, fresh, fine grained, gray, GNEISS. Joints are extremely close to closely spaced, moderately dipping to high angle, planar, rough to smooth, fresh to discolored. RQD = 0%			65.8		-74.4
								End of exploration at 65.8 feet.					
70													
75													
80													
85													
90													

REMARKS

3 - Casing refusal at 61.6' bml. Set up to core.

See Log Key for exploration of sample description and identification procedures. Stratification lines represent approximate boundaries between soil and bedrock types. Actual transitions may be gradual. Water level readings have been made at the times and under the conditions stated. Fluctuations of groundwater may occur due to other factors than those present at the times the measurements were made.

Exploration No.: B-1

GZA TEMPLATE TEST BORING, 12/7/2015, 1:02:01 PM

TEST BORING LOG

GZA GeoEnvironmental, Inc. *Engineers and Scientists*

University of New England
Marine Science Center Pier
Biddeford, Maine

EXPLORATION NO.: B-1
SHEET: 2 of 3
PROJECT NO: 09.0025897.00
REVIEWED BY:

Logged By: B. Cardali
Drilling Co.: New England Boring
Foreman: Brad Enos

Type of Rig: Barge
Rig Model:
Drilling Method: Drive and Wash

Boring Location: See Plan
Ground Surface Elev. (ft.): ~10.6
Final Boring Depth (ft.): 65.8
Date Start - Finish: 11/9/2015 - 11/10/2015

H. Datum:
V. Datum: NAVD 88

Hammer Type: Safety
Hammer Weight (lb.): 140
Hammer Fall (in.): 30
Auger or Casing O.D./I.D Dia (in.):

Sampler Type: SS
Sampler O.D. (in.): 2.0
Sampler Length (in.): 24
Rock Core Size: NQ

Groundwater Depth (ft.)

Date	Time	Water Depth	Stab. Time

Depth (ft.)	Casing Blows/ Core Rate	No.	Sample Depth (ft.)	Sample Pen. (in)	Sample Rec. (in)	Sample Blows (per 6 in.)	SPT Value	Sample Description and Identification (Modified Burmister Procedure)	Remarks	Field Test Data	Depth (ft.)	Stratum Description	Elev. (ft.)
35													
40		S-7	40-42	24	24	WOR WOR WOH WOH	0	S-7: Very soft, gray, Silty CLAY, trace fine Sand.				SILTY CLAY	
45													
50											51		-41.6
	16	S-8	51-53	24	8	18 6		S-8: Medium dense, gray, fine to coarse SAND, some Gravel, trace Silty Clay.					
	13					15 29	21		2				
55	30												
	26												
	27												
	38	S-9	56-58	24	5	10 19		S-9: Dense, gray, GRAVEL, some fine to coarse Sand, trace Silty Clay.				GLACIAL TILL	
	24					27 24	46						
	29												
60	9												

REMARKS

2 - Advanced 3" casing to 61.6' bml to core bedrock.

See Log Key for exploration of sample description and identification procedures. Stratification lines represent approximate boundaries between soil and bedrock types. Actual transitions may be gradual. Water level readings have been made at the times and under the conditions stated. Fluctuations of groundwater may occur due to other factors than those present at the times the measurements were made.

Exploration No.: B-1

GZA TEMPLATE TEST BORING, 12/7/2015, 1:02:01 PM

TEST BORING LOG

GZA GeoEnvironmental, Inc. *Engineers and Scientists*

University of New England
Marine Science Center Pier
Biddeford, Maine

EXPLORATION NO.: B-1
SHEET: 3 of 3
PROJECT NO: 09.0025897.00
REVIEWED BY:

Logged By: B. Cardali
Drilling Co.: New England Boring
Foreman: Brad Enos

Type of Rig: Barge
Rig Model:
Drilling Method: Drive and Wash

Boring Location: See Plan
Ground Surface Elev. (ft.): ~10.6
Final Boring Depth (ft.): 65.8
Date Start - Finish: 11/9/2015 - 11/10/2015

H. Datum:
V. Datum: NAVD 88

Hammer Type: Safety
Hammer Weight (lb.): 140
Hammer Fall (in.): 30
Auger or Casing O.D./I.D Dia (in.):

Sampler Type: SS
Sampler O.D. (in.): 2.0
Sampler Length (in.): 24
Rock Core Size: NQ

Groundwater Depth (ft.)

Date	Time	Water Depth	Stab. Time

Depth (ft.)	Casing Blows/ Core Rate	No.	Sample Depth (ft.)	Sample Pen. (in)	Sample Rec. (in)	Sample Blows (per 6 in.)	SPT Value	Sample Description and Identification (Modified Burmister Procedure)	Remarks	Field Test Data	Depth (ft.)	Stratum Description	Elev. (ft.)
70													
75													
80													
85													
90													

REMARKS

See Log Key for exploration of sample description and identification procedures. Stratification lines represent approximate boundaries between soil and bedrock types. Actual transitions may be gradual. Water level readings have been made at the times and under the conditions stated. Fluctuations of groundwater may occur due to other factors than those present at the times the measurements were made.

Exploration No.: B-1

GZA TEMPLATE TEST BORING, 12/7/2015, 1:02:01 PM

2015 BORING B-1

TEST BORING LOG

GZA GeoEnvironmental, Inc. *Engineers and Scientists*

University of New England
Marine Science Center Pier
Biddeford, Maine

EXPLORATION NO.: P-1
SHEET: 1 of 2
PROJECT NO: 09.0025897.00
REVIEWED BY:

Logged By: B Cardali
Drilling Co.: New England Boring
Foreman: Brad Enos

Type of Rig: Barge
Rig Model:
Drilling Method: Rod Probe

Boring Location: See Plan
Ground Surface Elev. (ft.): -10.2
Final Boring Depth (ft.): 52.3
Date Start - Finish: 11/10/2015 - 11/10/2015

H. Datum:
V. Datum: NAVD 88

Hammer Type: Safety
Hammer Weight (lb.): 300
Hammer Fall (in.): 24
Auger or Casing O.D./I.D Dia (in.):

Sampler Type:
Sampler O.D. (in.):
Sampler Length (in.):
Rock Core Size:

Groundwater Depth (ft.)

Date	Time	Water Depth	Stab. Time

Depth (ft.)	Casing Blows/ Core Rate	No.	Sample Depth (ft.)	Sample Pen. (in)	Sample Rec. (in)	Sample Blows (per 6 in.)	SPT Value	Sample Description and Identification (Modified Burmister Procedure)	Remarks	Field Test Data	Depth (ft.)	Stratum Description	Elev. (ft.)
	3												
	3												
	6												
	6												
	10												
5	9												
	6												
	6												
	7												
10	15												
	16												
	14											POSSIBLE SAND	
	8												
	7												
	8												
15	13												
	37												
	19												
	15												
	13												
20	12												
	22												
	14												
	12												
	25												
25	21												
	18												
	17												
30													

REMARKS

1 - Possible transition to Silty Clay at approximately 17.0' below mudline (bml) (El. -26.9'), based on increased driving resistance to advance probe.

See Log Key for exploration of sample description and identification procedures. Stratification lines represent approximate boundaries between soil and bedrock types. Actual transitions may be gradual. Water level readings have been made at the times and under the conditions stated. Fluctuations of groundwater may occur due to other factors than those present at the times the measurements were made.

Exploration No.: P-1

GZA TEMPLATE TEST BORING, 12/7/2015, 1:02:04 PM

TEST BORING LOG

GZA GeoEnvironmental, Inc. *Engineers and Scientists*

University of New England
Marine Science Center Pier
Biddeford, Maine

EXPLORATION NO.: P-1
SHEET: 2 of 2
PROJECT NO: 09.0025897.00
REVIEWED BY:

Logged By: B Cardali
Drilling Co.: New England Boring
Foreman: Brad Enos

Type of Rig: Barge
Rig Model:
Drilling Method: Rod Probe

Boring Location: See Plan
Ground Surface Elev. (ft.): -10.2
Final Boring Depth (ft.): 52.3
Date Start - Finish: 11/10/2015 - 11/10/2015

H. Datum:
V. Datum: NAVD 88

Hammer Type: Safety
Hammer Weight (lb.): 300
Hammer Fall (in.): 24
Auger or Casing O.D./I.D Dia (in.):

Sampler Type:
Sampler O.D. (in.):
Sampler Length (in.):
Rock Core Size:

Groundwater Depth (ft.)

Date	Time	Water Depth	Stab. Time

Depth (ft.)	Casing Blows/ Core Rate	No.	Sample Depth (ft.)	Sample Pen. (in)	Sample Rec. (in)	Sample Blows (per 6 in.)	SPT Value	Sample Description and Identification (Modified Burmister Procedure)	Remarks	Field Test Data	Depth (ft.)	Stratum Description	Elev. (ft.)
35	24												
	18												
	19												
	20												
	28												
	26												
40	24												
	30												
	34												
	52												
	37											POSSIBLE SILTY CLAY	
	33												
45	34												
	54												
	46												
	54												
	50												
50	50												
	50/3"												
											42		-42.0
									2				
												POSSIBLE GLACIAL TILL	
55													
									3		52.3		-40.8
60													

REMARKS

2 - Possible transition to Glacial Till at approximately 42.0' bml (El. -51.9').
3 - Probe refusal at 52.3' bml (El. -62.2').

See Log Key for exploration of sample description and identification procedures. Stratification lines represent approximate boundaries between soil and bedrock types. Actual transitions may be gradual. Water level readings have been made at the times and under the conditions stated. Fluctuations of groundwater may occur due to other factors than those present at the times the measurements were made.

Exploration No.: P-1

GZA TEMPLATE TEST BORING, 12/7/2015, 1:02:04 PM

2015 PROBE P-1

TEST BORING LOG

GZA GeoEnvironmental, Inc. *Engineers and Scientists*

University of New England
Marine Science Center Pier
Biddeford, Maine

EXPLORATION NO.: P-2
SHEET: 1 of 2
PROJECT NO: 09.0025897.00
REVIEWED BY:

Logged By: B Cardali
Drilling Co.: New England Boring
Foreman: Brad Enos

Type of Rig: Barge
Rig Model:
Drilling Method: Rod Probe

Boring Location: See Plan
Ground Surface Elev. (ft.): -7.3
Final Boring Depth (ft.): 54.2
Date Start - Finish: 11/10/2015 - 11/10/2015

H. Datum:
V. Datum: NAVD 88

Hammer Type: Safety
Hammer Weight (lb.): 300
Hammer Fall (in.): 24
Auger or Casing O.D./I.D Dia (in.):

Sampler Type:
Sampler O.D. (in.):
Sampler Length (in.):
Rock Core Size:

Groundwater Depth (ft.)

Date	Time	Water Depth	Stab. Time

Depth (ft.)	Casing Blows/ Core Rate	No.	Sample Depth (ft.)	Sample Pen. (in)	Sample Rec. (in)	Sample Blows (per 6 in.)	SPT Value	Sample Description and Identification (Modified Burmister Procedure)	Remarks	Field Test Data	Depth (ft.)	Stratum Description	Elev. (ft.)
	1												
	1												
	1												
	3												
	6												
5	4												
	3												
	8												
	22												
	9												
10	5												
	2												
	3												
	3												
	5												
15	4												
	5												
	7												
	5												
	10												
20	13												
	18												
	19												
	21												
	15												
25	13												
	14												
	30												
	29												
	26												
30													

REMARKS

1 - Upon retrieval of probe rods, bottom 30' of rods was bent at an angle approximately 30-45 degrees off of the vertical indicating possible sloping rock at approximately 30.0' bml (El. 37.3').

See Log Key for exploration of sample description and identification procedures. Stratification lines represent approximate boundaries between soil and bedrock types. Actual transitions may be gradual. Water level readings have been made at the times and under the conditions stated. Fluctuations of groundwater may occur due to other factors than those present at the times the measurements were made.

Exploration No.: P-2

GZA TEMPLATE TEST BORING, 12/7/2015, 1:02:04 PM

TEST BORING LOG

GZA GeoEnvironmental, Inc. *Engineers and Scientists*

University of New England
Marine Science Center Pier
Biddeford, Maine

EXPLORATION NO.: P-2
SHEET: 2 of 2
PROJECT NO: 09.0025897.00
REVIEWED BY:

Logged By: B Cardali
Drilling Co.: New England Boring
Foreman: Brad Enos

Type of Rig: Barge
Rig Model:
Drilling Method: Rod Probe

Boring Location: See Plan
Ground Surface Elev. (ft.): -7.3
Final Boring Depth (ft.): 54.2
Date Start - Finish: 11/10/2015 - 11/10/2015

H. Datum:
V. Datum: NAVD 88

Hammer Type: Safety
Hammer Weight (lb.): 300
Hammer Fall (in.): 24
Auger or Casing O.D./I.D Dia (in.):

Sampler Type:
Sampler O.D. (in.):
Sampler Length (in.):
Rock Core Size:

Groundwater Depth (ft.)

Date	Time	Water Depth	Stab. Time

Depth (ft.)	Casing Blows/ Core Rate	No.	Sample Depth (ft.)	Sample Pen. (in)	Sample Rec. (in)	Sample Blows (per 6 in.)	SPT Value	Sample Description and Identification (Modified Burmister Procedure)	Remarks	Field Test Data	Depth (ft.)	Stratum Description	Elev. (ft.)
	23												
	19												
	37												
	39												
	34												
35	42												
	31												
	40												
	36												
	41												
	38												
	46												
40	43												
	55												
	52												
	40												
	37												
45	38												
	41												
	65												
	91												
	78												
50	50												
	75												
	100/2"												
									1				
									2		54.2		-61.9
55													
60													

REMARKS

2 - Probe refusal at 54.2' bml (El. -61.5').

See Log Key for exploration of sample description and identification procedures. Stratification lines represent approximate boundaries between soil and bedrock types. Actual transitions may be gradual. Water level readings have been made at the times and under the conditions stated. Fluctuations of groundwater may occur due to other factors than those present at the times the measurements were made.

Exploration No.: P-2

GZA TEMPLATE TEST BORING, 12/7/2015, 1:02:04 PM

2015 PROBE P-2

ELEVATION	MLLW	NAVD88*
BFE	+19.0	+14.0
HAT	+11.6	+6.6
MHHW	+9.7	+4.7
MHW	+9.3	+4.3
MSL	+4.8	-0.2
MLW	+0.3	-4.7
MLLW	0.0	-5.0

*PROJECT DATUM

FOR PERMIT

Attention:
0 1"
If this scale bar does not measure 1" then drawing is not original scale.

STATE OF MAINE — DANIEL J. BANNON No. 13033 — LICENSED PROFESSIONAL ENGINEER — 4/16/2025

Designed:	DJB
Drawn:	JAM
Checked:	BJB
Approved:	BMM
P.E. No:	13033
GEI Project	2203703

GEI Consultants
GEI CONSULTANTS, INC.
5 MILK STREET
PORTLAND, ME 04101
(207)797-8901

UNIVERSITY OF NEW ENGLAND
11 HILLS BEACH RD.
BIDDEFORD, MAINE

UNIVERSITY OF NEW ENGLAND MARINE SCIENCE CENTER PIER

11 HILLS BEACH ROAD
BIDDEFORD, YORK COUNTY, MAINE

NO	DATE	ISSUE/REVISION	APP
7	4/16/2025	BIDDEFORD PERMIT APP.	DJB
6	9/17/2024	REVISED PERMIT SET	DJB
5	6/27/2024	REVISED PERMIT SET	DJB
4	9/14/2023	DEP PERMIT SET	DJB
3	6/28/2023	75% DESIGN SUBMISSION	DJB
2	2/15/2023	30% DESIGN SUBMISSION	DJB
1	12/9/2022	15% DESIGN SUB REV	DJB
0	11/11/2022	15% DESIGN SUBMISSION	DJB

SHEET NAME
BORING LOGS (SHEET 1 OF 3)

SHEET NO.
B-002

BANNON, DAN \\geoconsultants.com\data\Data_Storage\Working\UNIVERSITY OF NEW ENGLAND\2203703 UNE Marine Science Center Pier\00_CAD\Design\Sheets\2203703-B-002.dwg - 4/16/2025

BORING INFORMATION
NORTHING (ft): 228,600 | EASTING (ft): 2,895,310
GROUND SURFACE EL. (ft): -10.1 | DATE START/END: 12/12/2022 - 12/13/2022
VERT./HORIZ. DATUMS: NAVD 88/NAD83 ME West Zone | DRILLING COMPANY: New England Boring
TOTAL DEPTH (ft): 70.0 | DRILLER NAME: B. Enos
LOGGED BY: K. Gleichauf | RIG TYPE: CME 21

DRILLING INFORMATION
HAMMER TYPE: Safety Hammer - rope and cathead | CASING I.D./O.D.: 4 inch/ 4.5 inch | CORE BARREL TYPE: NX
AUGER I.D./O.D.: NA / NA | DRILL ROD O.D.: NM | CORE BARREL I.D./O.D.: 1.8 inch / 3 inch
DRILLING METHOD: Drive and Wash/Open Hole
WATER LEVEL DEPTHS (ft): water boring

ABBREVIATIONS:
Pen. = Penetration Length; Rec. = Recovery Length; RQD = Rock Quality Designation (Sum of lengths of core pieces>4 in / Pen., %; WOH = Weight of Rods; WOH = Weight of Hammer
S = Split Spoon Sample; C = Core Sample; U = Undisturbed Sample; G = Grab Sample; DP = Direct Push Sample; HSA = Hollow-Stem Auger
Qp = Pocket Penetrometer Strength; Sv = Pocket Torvane Shear Strength; LL = Liquid Limit; PI = Plasticity Index; PID = Photoionization Detector; I.D./O.D. = Inside Diameter/Outside Diameter
NA, NM = Not Applicable, Not Measured; Blows per 6 in. : 140-lb hammer falling 30 inches to drive a 2-inch-O.D. split spoon sampler.

BORING WB-1
PAGE 1 OF 3

Elev. (ft)	Depth (ft)	Sample No.	Sample Depth (ft)	Pen./ Rec. (in)	Blows per 6 in. or RQD	Drilling Remarks/ Field Test Data	Layer Name	Soil and Rock Description
	0	S1	0 to 2	24/2	WOR-WOH/18"		SAND/SILT	S1: NARROWLY GRADED GRAVEL WITH SAND (GP); ~80% coarse gravel (one piece), ~20% fine to coarse sand. Dark Gray.
	5	S2	5.5 to 7.5	24/9	5-3-4-6	Sand and shells in wash 0-5'.		S2: WIDELY GRADED SAND (SW); ~95% fine to coarse sand, ~5% nonplastic fines, gray. shells.
	10	S3	10.5 to 12.5	24/8	1-1-3-4	Sand and wood in wash 5.5-10.5'.		S3: WIDELY GRADED SAND (SW); Similar to S2.
	15	S4	15.5 to 17.5	24/9	3-4-2-WOH			S4: WIDELY GRADED SAND (SW); Similar to S2. pieces of wood.
	20	S5	20.5 to 22.5	24/24	2-1-1-2	Qp= 0.5 tsf (0-3") Sv= 2.5 tsf (0-3") Qp= 0.25 tsf (3-24") Sv= 1.5 tsf (3-24")	CLAY	S5: LEAN CLAY (CL); ~95% low plasticity fines, ~5% fine sand. Gray; Shells (0-10"). Sand seam at 20".

NOTES:
PROJECT NAME: UNE Marine Science Center Pier
CITY/STATE: Biddeford, Maine
GEI PROJECT NUMBER: 2203703

BORING WB-1
PAGE 2 OF 3

Elev. (ft)	Depth (ft)	Sample No.	Sample Depth (ft)	Pen./ Rec. (in)	Blows per 6 in. or RQD	Drilling Remarks/ Field Test Data	Layer Name	Soil and Rock Description
	25	S6	25.5 to 27.5	24/24	WOR-WOH/18"	Drove 4" casing to 25.5'. Drilled open hole 25.5-45.5'. Drilled with 3" casing from 45.5' to top of rock.Qp= 0.25 tsf Sv= 1.5 tsf	CLAY	S6: LEAN CLAY (CL); ~95% low plasticity fines, ~5% fine sand. Gray.
	30	S7	30.5 to 32.5	24/24	WOR/18"-2	Qp= 0.25 tsf Sv= 1.5 tsf		S7: LEAN CLAY (CL); Similar to S6.
	35	S8	35.5 to 37.5	24/24	WOR/18"-WOH	Qp= 0.25 tsf Sv= 1.5 tsf		S8: LEAN CLAY (CL); Similar to S6.
	40	S9	40.5 to 42.5	24/24	WOR/18"-WOH	Qp= 0.25 tsf Sv= 1.5 tsf		S9: LEAN CLAY (CL); Similar to S6.
	45	S10	45.5 to 47.5	24/24	WOR/18"-3	Qp= 0.5 tsf Sv= 1.5 tsf		S10: SANDY LEAN CLAY (CL); ~70% low plasticity fines, ~30% fine sand. Gray. Layered sand and clay.
	50	S11	50.5 to 52.5	24/4	14-14-16-22	Casing hard driving starting at 49.7'.	TILL	S11: CLAYEY GRAVEL WITH SAND (GC); ~50% fine to coarse gravel, ~30% fine to coarse sand, ~20% low plasticity fines. Gray.
	55							

NOTES:
PROJECT NAME: UNE Marine Science Center Pier
CITY/STATE: Biddeford, Maine
GEI PROJECT NUMBER: 2203703

BORING WB-1
PAGE 3 OF 3

Elev. (ft)	Depth (ft)	Sample No.	Sample Depth (ft)	Pen./ Rec. (in)	Blows per 6 in. or RQD	Drilling Remarks/ Field Test Data	Layer Name	Soil and Rock Description
	60	S12	55.5 to 59.4	11/6	37-50/5"		TILL	S11: WIDELY GRADED GRAVEL WITH SAND AND CLAY (GW-GC); ~60% fine to coarse gravel, ~30% fine to coarse sand, ~10% low plasticity fines. Gray.
		C1	59.4 to 59.3	35/35	0	Core Times (min/ft): 4-6-6/0.9' C1 jammed at 2.9'.	ROCK	C1: GNEISS, Dark Gray with white banding, hard to med. hard. Slightly weathered (0-24"), highly weathered (24-35"). Joints at 75 to 90 degrees. Highly fractured.
	65	C2	59.3 to 60.8	18/18	0	Core Times (min/ft): 4/0.5'-1/0.5'-4/0.5' C2 jammed at 0.5, 1.5'.		C2: GNEISS. Similar to C1. Highly weathered (0-10"), moderately weathered (10-18"), dissolved quartz bands.
		C3	60.8 to 65.8	60/60	71	Core Times (min/ft): 7/1.2'-2/0.8'-4-4/0.7'-2/0.3'-6 C3 jammed at 1.2, 3.7'.		C3: GNEISS, hard. Fresh throughout. joints spaced 1-19" at 0 to 60 degrees.
	70	C4	65.8 to 70	50/36	24	Core Times (min/ft): 6-5-5-3/1.2'		C4: GNEISS. Fresh (0-12"). Moderately weathered and highly fractured (12-36").
	75							Bottom of boring at depth 70 ft.
	80							
	85							

NOTES:
PROJECT NAME: UNE Marine Science Center Pier
CITY/STATE: Biddeford, Maine
GEI PROJECT NUMBER: 2203703

2022 BORING WB-1

BORING INFORMATION
NORTHING (ft): 228,619 | EASTING (ft): 2,895,396
GROUND SURFACE EL. (ft): -11.6 | DATE START/END: 12/7/2022 - 12/8/2022
VERT./HORIZ. DATUMS: NAVD 88/NAD83 ME West Zone | DRILLING COMPANY: New England Boring
TOTAL DEPTH (ft): 68.4 | DRILLER NAME: B. Enos
LOGGED BY: K. Gleichauf | RIG TYPE: CME 21

DRILLING INFORMATION
HAMMER TYPE: Safety Hammer - rope and cathead | CASING I.D./O.D.: 4 inch/ 4.5 inch | CORE BARREL TYPE: NX
AUGER I.D./O.D.: NA / NA | DRILL ROD O.D.: NM | CORE BARREL I.D./O.D.: 1.8 inch / 3 inch
DRILLING METHOD: Drive and Wash/Open Hole
WATER LEVEL DEPTHS (ft): water boring

ABBREVIATIONS:
Pen. = Penetration Length; Rec. = Recovery Length; RQD = Rock Quality Designation (Sum of lengths of core pieces>4 in / Pen., %; WOH = Weight of Rods; WOH = Weight of Hammer
S = Split Spoon Sample; C = Core Sample; U = Undisturbed Sample; G = Grab Sample; DP = Direct Push Sample; HSA = Hollow-Stem Auger
Qp = Pocket Penetrometer Strength; Sv = Pocket Torvane Shear Strength; LL = Liquid Limit; PI = Plasticity Index; PID = Photoionization Detector; I.D./O.D. = Inside Diameter/Outside Diameter
NA, NM = Not Applicable, Not Measured; Blows per 6 in. : 140-lb hammer falling 30 inches to drive a 2-inch-O.D. split spoon sampler.

BORING WB-2
PAGE 1 OF 3

Elev. (ft)	Depth (ft)	Sample No.	Sample Depth (ft)	Pen./ Rec. (in)	Blows per 6 in. or RQD	Drilling Remarks/ Field Test Data	Layer Name	Soil and Rock Description
	0	S1	0 to 2	24/0	WOH/12"-2-2		SAND/SILT	S1: No recovery. Redrove 3" spoon. S1 (redrive): WIDELY GRADED SAND (SW); ~95% fine to coarse sand, ~5% nonplastic fines. Gray. Shells.
	5	S2	4 to 6	24/5	6-4-4-9			S2: WIDELY GRADED SAND (SW); Similar to S1.
	10	S3	9 to 11	24/0	1-2-3-4			S3: No recovery. Redrove 3" spoon. S3 (redrive): No recovery. Probable loose sand. Split spoon returned clean. Sand and shells in wash.
	15	S4	14 to 16	24/0	1-2-2-3			S4: No Recovery. Redrove 3" spoon. S4 (redrive): NARROWLY GRADED GRAVEL (GP); ~100% coarse gravel. Probable wash material, gravel is clean.
	20	S5	19 to 21	24/11	10-7-6-28	Clay in wash. Driller noted reduced resistance.	CLAY	S5: SANDY SILT (ML); ~ 60% nonplastic fines, ~40% fine sand. Gray. Traces of wood. Organic odor.

NOTES:
PROJECT NAME: UNE Marine Science Center Pier
CITY/STATE: Biddeford, Maine
GEI PROJECT NUMBER: 2203703

BORING WB-2
PAGE 2 OF 3

Elev. (ft)	Depth (ft)	Sample No.	Sample Depth (ft)	Pen./ Rec. (in)	Blows per 6 in. or RQD	Drilling Remarks/ Field Test Data	Layer Name	Soil and Rock Description
	25	S6	24 to 26	24/24	WOH/18"-1	Qp=0.25 tsf Sv=0.05 tsf	CLAY	S6: LEAN CLAY (CL); ~100% low plasticity fines. Gray.
	30	S7	29 to 31	24/24	WOR-WOH/12"-3	Qp=0.25 tsf Sv=0.05 tsf		S7: LEAN CLAY (CL); ~95% low plasticity fines, ~5% fine sand. Gray. Sand seam in tip.
	35	S8	34 to 36	24/24	WOH/12"-WOH/12"	Drove 4" casing to 32'. Drilled open hole 32-44'. Drilled with 3" casing 44' to top of rock. Qp=0.25 tsf Sv=0.05 tsf		S8: LEAN CLAY (CL); Similar to S7.
	40	S9	39 to 41	24/24	WOH/12"-3-3			S9 (0-6"): SANDY SILT (ML); ~60% nonplastic fines, ~40% fine sand. Gray. S9 (6-13"): LEAN CLAY (CL): Similar to S8. S9 (13-19"): SANDY SILT (ML): Similar to (0-9"). S9 (19-24"): LEAN CLAY (CL): Similar to S8.
	45	S10	44 to 46	24/16	10-14-8-5		TILL	S10: SILTY SAND (SM); ~75% fine sand, ~25% nonplastic fines. Gray. More silt (0-8") more sand (8-16").
	50	S11	49 to 51	24/22	6-10-13-33			S11: NARROWLY GRADED SAND with Silt (SP-SM); ~90% fine sand, ~10% nonplastic fines. Gray (0-10"), Gray/brown (10-22"). One piece of gravel at 18".
	55	S12	54 to 56	24/15	10-7-10-18			S12: NARROWLY GRADED SAND with Silt (SP-SM); Similar to S11. Gravel seam (3-5").

NOTES:
PROJECT NAME: UNE Marine Science Center Pier
CITY/STATE: Biddeford, Maine
GEI PROJECT NUMBER: 2203703

BORING WB-2
PAGE 3 OF 3

Elev. (ft)	Depth (ft)	Sample No.	Sample Depth (ft)	Pen./ Rec. (in)	Blows per 6 in. or RQD	Drilling Remarks/ Field Test Data	Layer Name	Soil and Rock Description
	60						TILL	
		C1	59 to 63.8	57/57	17	Core Times (min/ft): 2-2-2/2.7'-1/0.3'-4-5/0.6' C1 jammed at 2.7, 4.6'.	ROCK	C1: GNEISS, hard, dark gray with white banding. Highly weathered (0-19"), slightly weathered (19-57"), joints spaced 0 to 5" at 30 to 75 degrees. weathering occurs in quartzy seams.
	65	C2	63.8 to 68.4	55/55	13	Core Times (min/ft): 2-2-1/0.6'-2-5 C2 jammed at 2.6, 4.6'.		C2: GNEISS. Similar to C1. Slightly weathered (0-22"), highly weathered (22-31"), slightly weathered (31-55"). Weathering in quartz bands.
	70							Bottom of boring at depth 68.4 ft.
	75							
	80							
	85							

NOTES:
PROJECT NAME: UNE Marine Science Center Pier
CITY/STATE: Biddeford, Maine
GEI PROJECT NUMBER: 2203703

2022 BORING WB-2

ELEVATION	MLLW	NAVD88*
BFE	+19.0	+14.0
HAT	+11.6	+6.6
MHHW	+9.7	+4.7
MHW	+9.3	+4.3
MSL	+4.8	-0.2
MLW	+0.3	-4.7
MLLW	0.0	-5.0

*PROJECT DATUM

Attention:
0 1"
If this scale bar does not measure 1" then drawing is not original scale.

STATE OF MAINE — DANIEL J. BANNON No. 13033 — LICENSED PROFESSIONAL ENGINEER — 4/16/2025

Designed:	DJB
Drawn:	JAM
Checked:	BJB
Approved:	BMM
P.E. No:	13033
GEI Project	2203703

GEI Consultants
GEI CONSULTANTS, INC.
5 MILK STREET
PORTLAND, ME 04101
(207)797-8901

UNIVERSITY OF NEW ENGLAND
11 HILLS BEACH RD.
BIDDEFORD, MAINE

UNIVERSITY OF NEW ENGLAND MARINE SCIENCE CENTER PIER
11 HILLS BEACH ROAD
BIDDEFORD, YORK COUNTY, MAINE

NO	DATE	ISSUE/REVISION	APP
7	4/16/2025	BIDDEFORD PERMIT APP.	DJB
6	9/17/2024	REVISED PERMIT SET	DJB
5	6/27/2024	REVISED PERMIT SET	DJB
4	9/14/2023	DEP PERMIT SET	DJB
3	6/28/2023	75% DESIGN SUBMISSION	DJB
2	2/15/2023	30% DESIGN SUBMISSION	DJB
1	12/9/2022	15% DESIGN SUB REV	DJB
0	11/11/2022	15% DESIGN SUBMISSION	DJB

SHEET NAME: **BORING LOGS (SHEET 2 OF 3)**
SHEET NO.: **B-003**

FOR PERMIT

BANNON, DAN \\geiconsultants.com\data\Data_Storage\Working\UNIVERSITY OF NEW ENGLAND\2203703 UNE Marine Science Center Pier\00_CAD\Design\Sheets\2203703-B-003.dwg - 4/16/2025

BANNON, DAN \\geiconsultants.com\data\Data_Storage\Working\UNIVERSITY OF NEW ENGLAND\2203703 UNE Marine Science Center Pier\00_CAD\Design\Sheets\2203703-B-004.dwg - 4/16/2025

BORING WB-3 — PAGE 1 of 3

BORING INFORMATION
NORTHING (ft): 228,591 | EASTING (ft): 2,895,359
GROUND SURFACE EL. (ft): -10.2 | DATE START/END: 12/9/2022 - 12/9/2022
VERT./HORIZ. DATUMS: NAVD 88/NAD83 ME West Zone | DRILLING COMPANY: New England Boring
TOTAL DEPTH (ft): 63.4 | DRILLER NAME: B. Enos
LOGGED BY: K. Gleichauf | RIG TYPE: CME 21

DRILLING INFORMATION
HAMMER TYPE: Safety Hammer - rope and cathead | CASING I.D./O.D.: 4 inch/ 4.5 inch | CORE BARREL TYPE: NX
AUGER I.D./O.D.: NA / NA | DRILL ROD O.D.: NM | CORE BARREL I.D./O.D.: 1.8 inch / 3 inch
DRILLING METHOD: Drive and Wash/Open Hole
WATER LEVEL DEPTHS (ft): water boring

ABBREVIATIONS: Pen. = Penetration Length; Rec. = Recovery Length; RQD = Rock Quality Designation = Length of Sound Cores>4 in / Pen.,%; WOR = Weight of Rods; WOH = Weight of Hammer; S = Split Spoon Sample; C = Core Sample; U = Undisturbed Sample; SC = Sonic Core; DP = Direct Push Sample; HSA = Hollow-Stem Auger; Qp = Pocket Penetrometer Strength; Sv = Pocket Torvane Shear Strength; LL = Liquid Limit; PI = Plasticity Index; PID = Photoionization Detector; I.D./O.D.= Inside Diameter/Outside Diameter; NA, NM = Not Applicable, Not Measured; Blows per 6 in.: 140-lb hammer falling 30 inches to drive a 2-inch-O.D. split spoon sampler.

Elev. (ft)	Depth (ft)	Sample No.	Depth (ft)	Pen./ Rec. (in)	Blows per 6 in. or RQD	Drilling Remarks/ Field Test Data	Layer Name	Soil and Rock Description
		S1	0 to 2	24/5	WOH/18"-1		SAND/SILT	S1: SILTY SAND (SM); ~80% fine to coarse sand, ~20% nonplastic/organic fines. Gray. wood. organic odor.
		S2	3 to 5	24/9	2-1-2-3			S2: WIDELY GRADED SAND (SW); ~100% fine to coarse sand. Gray. organic odor.
	5							
		S3	8 to 10	24/12	1-2-3-4			S3: WIDELY GRADED SAND (SW); Similar to S2. Shells.
-20	10							
		S4	13 to 15	24/7	1-2-3-6			S4: NARROWLY GRADED SAND (SP); ~100% coarse sand. Gray. shells.
	15							
		S5	18 to 20	24/12	9-4-8-8			S5: SILTY SAND (SM); ~65% fine sand, ~25% nonplastic fines, ~10% fine to coarse gravel. wood. shells.
-30	20					clay in wash at 22'.		
		S6	23 to	24/24	WOR-	Qp<0.25 tsf Sv=0.05 tsf	CLAY	S6: LEAN CLAY (CL); ~95% low plasticity fines, ~5% fine sand. Gray. Sand seams (8-9"), (19-20").

NOTES:

PROJECT NAME: UNE Marine Science Center Pier
CITY/STATE: Biddeford, Maine
GEI PROJECT NUMBER: 2203703
GEI Consultants

GEI WOBURN STD 5-NORTH-EAST-LAYER NAME 2203703 UNE PIER TYPED LOGS.GPJ 1/19/23

BORING WB-3 — PAGE 2 of 3

NORTHING (ft): 228,591 | EASTING (ft): 2,895,359
GROUND SURFACE EL. (ft): -10.2 | DATE START/END: 12/9/2022 - 12/9/2022
VERT./HORIZ. DATUMS: NAVD 88/NAD83 ME West Zone | DRILLING COMPANY: New England Boring

Elev. (ft)	Depth (ft)	Sample No.	Depth (ft)	Pen./ Rec. (in)	Blows per 6 in. or RQD	Drilling Remarks/ Field Test Data	Layer Name	Soil and Rock Description
			25		1/12"-1		CLAY	
	25							
		S7	28 to 30	24/24	WOR/12"-WOH-1	drove 4" casing to 28'. Drilled open hole 28-48. Drilled with 3" casing 48' to top of rock.Qp<0.25 tsf Sv=0.05 tsf		S7: LEAN CLAY (CL); Similar to S6.
-40	30							
		S8	33 to 35	24/24	WOR/12"-WOH-2	Qp<0.25 tsf Sv=0.05 tsf		S8: LEAN CLAY (CL) Similar to S6.
	35							
		S9	38 to 40	24/24	WOR/12"-WOH-2	Qp<0.25 tsf Sv=0.05 tsf		S9: LEAN CLAY (CL); Similar to S6. Fine sand seams (6-8"), (20-24").
-50	40							
		S10	43 to 45	24/24	WOR-1/12"-4			S10 (0-6"): LEAN CLAY (CL); Similar to S6. S10(6-24"): CLAYEY SAND (SC); ~75% fine sand, ~25% low plasticity fines. Gray. Brown (20-24").
	45							
		S11	48 to 50	24/5	45-29-14-15		TILL	S11: CLAYEY SAND with Gravel (SC); ~50% fine sand, ~30% fine to coarse gravel up to 1.25", ~20% low plasticity fines. Gray.
-60	50							
		S12	53 to 53.3	4/4	50/4"	casing refusal at 53.3'.Core Times (min/ft): 4-2/0.2' C1 jammed at 1.2'.		S12: NARROWLY GRADED GRAVEL with Sand (GP); ~75% coarse gravel, ~20% fine to coarse sand, ~5% nonplastic fines. Gray/Brown.
		C1	53.3	15/15	33		ROCK	C1: GNEISS, hard, dark gray. Slightly weathered. joints spaced 0-5" at 60 to 90 degrees.
	55	C2	to	60/57	88			

NOTES:

PROJECT NAME: UNE Marine Science Center Pier
CITY/STATE: Biddeford, Maine
GEI PROJECT NUMBER: 2203703
GEI Consultants

GEI WOBURN STD 5-NORTH-EAST-LAYER NAME 2203703 UNE PIER TYPED LOGS.GPJ 1/19/23

BORING WB-3 — PAGE 3 of 3

NORTHING (ft): 228,591 | EASTING (ft): 2,895,359
GROUND SURFACE EL. (ft): -10.2 | DATE START/END: 12/9/2022 - 12/9/2022
VERT./HORIZ. DATUMS: NAVD 88/NAD83 ME West Zone | DRILLING COMPANY: New England Boring

Elev. (ft)	Depth (ft)	Sample No.	Depth (ft)	Pen./ Rec. (in)	Blows per 6 in. or RQD	Drilling Remarks/ Field Test Data	Layer Name	Soil and Rock Description
			54.6 54.6 to 59.6			Core Times (min/ft): 2-2-3-3-4	ROCK	C2: GNEISS, hard, dark gray with white banding. fresh throughout. joints spaced 3-12" at 60 degrees. calcite seam horizontal at 48".
-70	60	C3	59.6 to 63.4	45/48	31	Core Times (min/ft):2-3-2/0.2'-3-2/0.6' C3 jammed at 2.2'.		C3: GNEISS, hard, dark gray. fresh throughout. joints spaced 1-5" at 60 degrees. Horizontal calcite seam at 15". Highly fractured (23-25").
								Bottom of boring at depth 63.4 ft.
	65							
-80	70							
	75							
-90	80							
	85							

NOTES:

PROJECT NAME: UNE Marine Science Center Pier
CITY/STATE: Biddeford, Maine
GEI PROJECT NUMBER: 2203703
GEI Consultants

GEI WOBURN STD 5-NORTH-EAST-LAYER NAME 2203703 UNE PIER TYPED LOGS.GPJ 1/19/23

2022 BORING WB-3

BORING WB-4 — PAGE 1 of 2

BORING INFORMATION
NORTHING (ft): 228,566 | EASTING (ft): 2,895,422
GROUND SURFACE EL. (ft): -8.3 | DATE START/END: 12/6/2022 - 12/6/2022
VERT./HORIZ. DATUMS: NAVD 88/NAD83 ME West Zone | DRILLING COMPANY: New England Boring
TOTAL DEPTH (ft): 46.7 | DRILLER NAME: B. Enos
LOGGED BY: K. Gleichauf | RIG TYPE: CME 21

DRILLING INFORMATION
HAMMER TYPE: Safety Hammer - rope and cathead | CASING I.D./O.D.: 4 inch/ 4.5 inch | CORE BARREL TYPE: NX
AUGER I.D./O.D.: NA / NA | DRILL ROD O.D.: NM | CORE BARREL I.D./O.D.: 1.8 inch / 3 inch
DRILLING METHOD: Drive and Wash/Open Hole
WATER LEVEL DEPTHS (ft): water boring

ABBREVIATIONS: Pen. = Penetration Length; Rec. = Recovery Length; RQD = Rock Quality Designation = Length of Sound Cores>4 in / Pen.,%; WOR = Weight of Rods; WOH = Weight of Hammer; S = Split Spoon Sample; C = Core Sample; U = Undisturbed Sample; SC = Sonic Core; DP = Direct Push Sample; HSA = Hollow-Stem Auger; Qp = Pocket Penetrometer Strength; Sv = Pocket Torvane Shear Strength; LL = Liquid Limit; PI = Plasticity Index; PID = Photoionization Detector; I.D./O.D.= Inside Diameter/Outside Diameter; NA, NM = Not Applicable, Not Measured; Blows per 6 in.: 140-lb hammer falling 30 inches to drive a 2-inch-O.D. split spoon sampler.

Elev. (ft)	Depth (ft)	Sample No.	Depth (ft)	Pen./ Rec. (in)	Blows per 6 in. or RQD	Drilling Remarks/ Field Test Data	Layer Name	Soil and Rock Description
		S1	0 to 2	24/4	WOR/12"-WOH/12"		SAND/SILT	S1: SILTY SAND (SM); ~60% fine to coarse sand, ~35% organic fines, ~5% fine gravel. Gray. Shells. Wood. Organic odor.
-10								
	5	S2	5 to 7	24/4	1-1-1/12"			S2: SILTY SAND (SM); Similar to S1.
						Casing increased resistance at 7.5'.		
	10	S3	10 to 12	24/15	9-4-1/12"			S3: SANDY SILT (ML); ~60% nonplastic fines, ~40% fine to coarse sand. Gray. Shells. (0-7") mostly fine sand, (7-15") fine to coarse sand. Organic odor.
-20								
	15	S4	15 to 17	24/0	WOH-1/12"-1			S4: No recovery. Redrove 3" spoon. S4 (redrive): SANDY SILT (ML); Similar to S3. One ~2.5" piece of gravel on top. Wood. Shells.
	20	S5	20 to 22	24/24	1/24"	Qp<0.25 tsf Sv=0.05 tsf	CLAY	S5: LEAN CLAY (CL); ~95% low plasticity fines, ~5% fine sand. Gray.
-30								

NOTES:

PROJECT NAME: UNE Marine Science Center Pier
CITY/STATE: Biddeford, Maine
GEI PROJECT NUMBER: 2203703
GEI Consultants

GEI WOBURN STD 5-NORTH-EAST-LAYER NAME 2203703 UNE PIER TYPED LOGS.GPJ 1/19/23

BORING WB-4 — PAGE 2 of 2

NORTHING (ft): 228,566 | EASTING (ft): 2,895,422
GROUND SURFACE EL. (ft): -8.3 | DATE START/END: 12/6/2022 - 12/6/2022
VERT./HORIZ. DATUMS: NAVD 88/NAD83 ME West Zone | DRILLING COMPANY: New England Boring

Elev. (ft)	Depth (ft)	Sample No.	Depth (ft)	Pen./ Rec. (in)	Blows per 6 in. or RQD	Drilling Remarks/ Field Test Data	Layer Name	Soil and Rock Description
	25	S6	25 to 27	24/4	1-1-2-4	Qp<0.25 tsf Sv=0.05 tsf	CLAY	S6: LEAN CLAY (CL); Similar to S5.
	30	S7	30 to 32	24/24	5-2-2-1	Qp<0.25 tsf Sv=0.05 tsf		S7: LEAN CLAY (CL); Similar to S5. Some gravel seams.
-40								
	35	S8	35 to 36.7	20/9	WOR/18"-50/2"	Qp<0.25 tsf Sv=0.05 tsf		S8: LEAN CLAY (CL); Similar to S5.
		C1	36.7 to 39.7	36/31	14	Core Times (min/ft): 4-6-6 C1 jammed at 3'.	ROCK	C1: GNEISS, hard, dark gray/green. Slightly weathered. Joints spaced 0-5" at 0-90 degrees.
	40	C2	39.7 to 42.4	32/37	94	Core Times (min/ft): 3-6-4/0.7'		C2: GNEISS. Similar to C1. Joints spaced 1-18".
-50		C3	42.4 to 43.2	9/9	0	Core Times (min/ft): 5/0.7'		C3: GNEISS. Similar to C1. Highly fractured.
		C4	43.1 to 44.7	19/19	26	Core Times (min/ft): 5-5/0.6'		C4: GNEISS, hard, dark gray/black with white banding. Slightly weathered. Joints spaced 0-5" at 75 degrees.
	45	C5	44.7 to 46.7	24/24	38	Core Times (min/ft): 5-8		C5: GNEISS. Similar to C4.
								Bottom of boring at depth 46.7 ft.
	50							
-60								
	55							

NOTES:

PROJECT NAME: UNE Marine Science Center Pier
CITY/STATE: Biddeford, Maine
GEI PROJECT NUMBER: 2203703
GEI Consultants

GEI WOBURN STD 5-NORTH-EAST-LAYER NAME 2203703 UNE PIER TYPED LOGS.GPJ 1/19/23

2022 BORING WB-4

BORING LB-1 — PAGE 1 of 1

BORING INFORMATION
LOCATION: Proposed Pier Near Shore
GROUND SURFACE EL. (ft): NM | DATE START/END: 3/9/2023 - 3/9/2023
VERTICAL DATUM: | DRILLING COMPANY: New England Boring
TOTAL DEPTH (ft): 8.5 | DRILLER NAME: Mike M.
LOGGED BY: D. Pelletier | RIG TYPE: M1 ATV

DRILLING INFORMATION
HAMMER TYPE: Manual | CASING I.D./O.D.: 4 inch / NA | CORE BARREL TYPE:
AUGER I.D./O.D.: NA / NA | DRILL ROD O.D.: NM | CORE BARREL I.D./O.D. NA / NA
DRILLING METHOD: Drive and Wash
WATER LEVEL DEPTHS (ft): Not measured

ABBREVIATIONS: Pen. = Penetration Length; Rec. = Recovery Length; RQD = Rock Quality Designation = Length of Sound Cores>4 in / Pen.,%; WOR = Weight of Rods; WOH = Weight of Hammer; S = Split Spoon Sample; C = Core Sample; U = Undisturbed Sample; SC = Sonic Core; DP = Direct Push Sample; HSA = Hollow-Stem Auger; Qp = Pocket Penetrometer Strength; Sv = Pocket Torvane Shear Strength; LL = Liquid Limit; PI = Plasticity Index; PID = Photoionization Detector; I.D./O.D. = Inside Diameter/Outside Diameter; NA, NM = Not Applicable, Not Measured; Blows per 6 in.: 140-lb hammer falling 30 inches to drive a 2-inch-O.D. split spoon sampler.

Elev. (ft)	Depth (ft)	Sample No.	Depth (ft)	Pen./ Rec. (in)	Blows per 6 in. or RQD	Drilling Remarks/ Field Test Data	Layer Name	Soil and Rock Description
		S1	0 to 2	24/4	3-3-5-13			S1: SANDY ORGANIC SOIL (OL), 60% nonplastic fines, 40% fine sand, dark brown, organic topsoil.
		S2	2 to 2.2	2/2	50/0.25	Ledge at 2.2 ft. Switch to Drive and Wash. Rollerbit to 3 ft.		S2: WIDELY GRADED GRAVEL WITH SAND (GP), 85% angular gravel, 10% fine to coarse sand, 5% nonplastic fines, dark gray (WEATHERED BEDROCK).
		C1	3 to 7	48/40	10			C1: GNEISS, hard, metamorphic, fine-grained, joints slightly to moderately weathered, close, some cavaties throughout, gray. RQD 10% MPF 10-11-12-15
	5							
		C2	7 to 8.5	18/16	50			C2: GNEISS, hard, metamorphic, fine-grained, joints slightly to moderately weathered, very close except 0-9 inches one piece, gray. RQD 50% MPF 18-11
								Finished hole at 5.5 ft. coring (8.5 ft. depth) due to time constraints.
	10							
	15							
	20							

NOTES:

PROJECT NAME: UNE Marine Science Center Pier
CITY/STATE: Biddeford, ME
GEI PROJECT NUMBER: 2203703
GEI Consultants

GEI WOBURN STD 1-LOCATION-LAYER NAME UNE BORING LOGS.GPJ 4/3/23

2023 BORING LB-1

BORING LB-3 — PAGE 1 of 1

BORING INFORMATION
LOCATION: Near Stairway
GROUND SURFACE EL. (ft): NM | DATE START/END: 3/9/2023 - 3/9/2023
VERTICAL DATUM: | DRILLING COMPANY: New England Boring
TOTAL DEPTH (ft): 1.2 | DRILLER NAME: Mike M.
LOGGED BY: D. Pelletier | RIG TYPE: M1 ATV

DRILLING INFORMATION
HAMMER TYPE: Manual | CASING I.D./O.D.: 4 inch / NA | CORE BARREL TYPE:
AUGER I.D./O.D.: NA / NA | DRILL ROD O.D.: NM | CORE BARREL I.D./O.D. NA / NA
DRILLING METHOD: Drive and Wash
WATER LEVEL DEPTHS (ft): Not measured

ABBREVIATIONS: Pen. = Penetration Length; Rec. = Recovery Length; RQD = Rock Quality Designation = Length of Sound Cores>4 in / Pen.,%; WOR = Weight of Rods; WOH = Weight of Hammer; S = Split Spoon Sample; C = Core Sample; U = Undisturbed Sample; SC = Sonic Core; DP = Direct Push Sample; HSA = Hollow-Stem Auger; Qp = Pocket Penetrometer Strength; Sv = Pocket Torvane Shear Strength; LL = Liquid Limit; PI = Plasticity Index; PID = Photoionization Detector; I.D./O.D. = Inside Diameter/Outside Diameter; NA, NM = Not Applicable, Not Measured; Blows per 6 in.: 140-lb hammer falling 30 inches to drive a 2-inch-O.D. split spoon sampler.

Elev. (ft)	Depth (ft)	Sample No.	Depth (ft)	Pen./ Rec. (in)	Blows per 6 in. or RQD	Drilling Remarks/ Field Test Data	Layer Name	Soil and Rock Description
		S1	0 to 1.2	14/6	2-8-50/2"			S1: SANDY ORGANIC SOIL (OL), 60% nonplastic fines, 40% fine sand, dark brown, organic topsoil.
								Bottom of boring at depth 1.2 ft.
	5							
	10							
	15							
	20							

NOTES:

PROJECT NAME: UNE Marine Science Center Pier
CITY/STATE: Biddeford, ME
GEI PROJECT NUMBER: 2203703
GEI Consultants

GEI WOBURN STD 1-LOCATION-LAYER NAME UNE BORING LOGS.GPJ 4/3/23

2023 BORING LB-3

FOR PERMIT

ELEVATION	MLLW	NAVD88*
BFE	+19.0	+14.0
HAT	+11.6	+6.6
MHHW	+9.7	+4.7
MHW	+9.3	+4.3
MSL	+4.8	-0.2
MLW	+0.3	-4.7
MLLW	0.0	-5.0

*PROJECT DATUM

Attention:
0 1"
If this scale bar does not measure 1" then drawing is not original scale.

STATE OF MAINE
DANIEL J. BANNON
No. 13033
LICENSED PROFESSIONAL ENGINEER
4/16/2025

Designed:	DJB
Drawn:	JAM
Checked:	BJB
Approved:	BMM
P.E. No:	13033
GEI Project	2203703

GEI Consultants
GEI CONSULTANTS, INC.
5 MILK STREET
PORTLAND, ME 04101
(207)797-8901

UNE
UNIVERSITY OF NEW ENGLAND
11 HILLS BEACH RD.
BIDDEFORD, MAINE

UNIVERSITY OF NEW ENGLAND MARINE SCIENCE CENTER PIER

11 HILLS BEACH ROAD
BIDDEFORD, YORK COUNTY, MAINE

NO	DATE	ISSUE/REVISION	APP
7	4/16/2025	BIDDEFORD PERMIT APP.	DJB
6	9/17/2024	REVISED PERMIT SET	DJB
5	6/27/2024	REVISED PERMIT SET	DJB
4	9/14/2023	DEP PERMIT SET	DJB
3	6/28/2023	75% DESIGN SUBMISSION	DJB
2	2/15/2023	30% DESIGN SUBMISSION	DJB
1	12/9/2022	15% DESIGN SUB REV	DJB
0	11/11/2022	15% DESIGN SUBMISSION	DJB

SHEET NAME: **BORING LOGS (SHEET 3 OF 3)**

SHEET NO. **B-004**

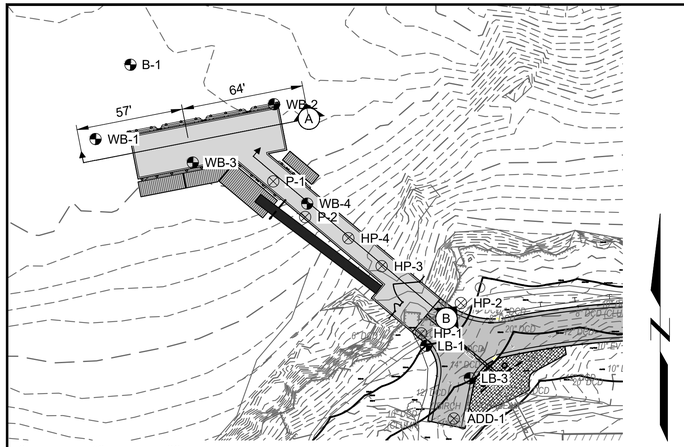

KEY PLAN

SCALE: 1" = 40'

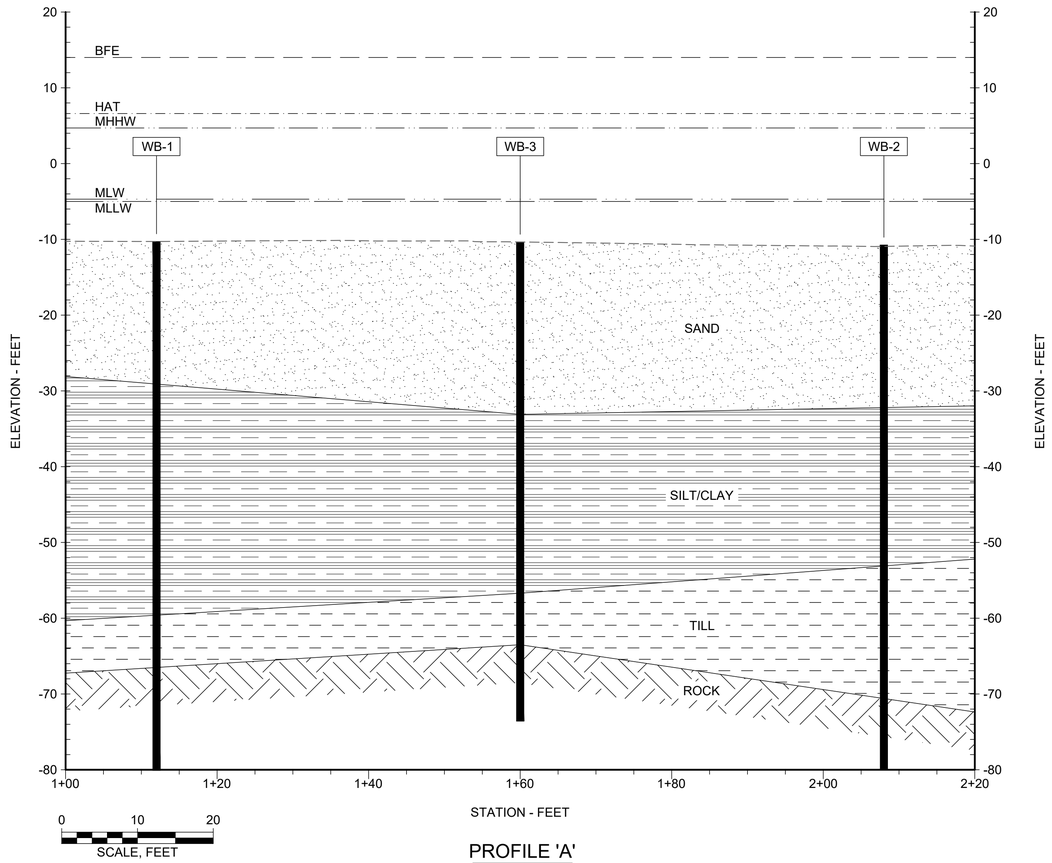

PROFILE 'A'

SCALE: 1" = 10'

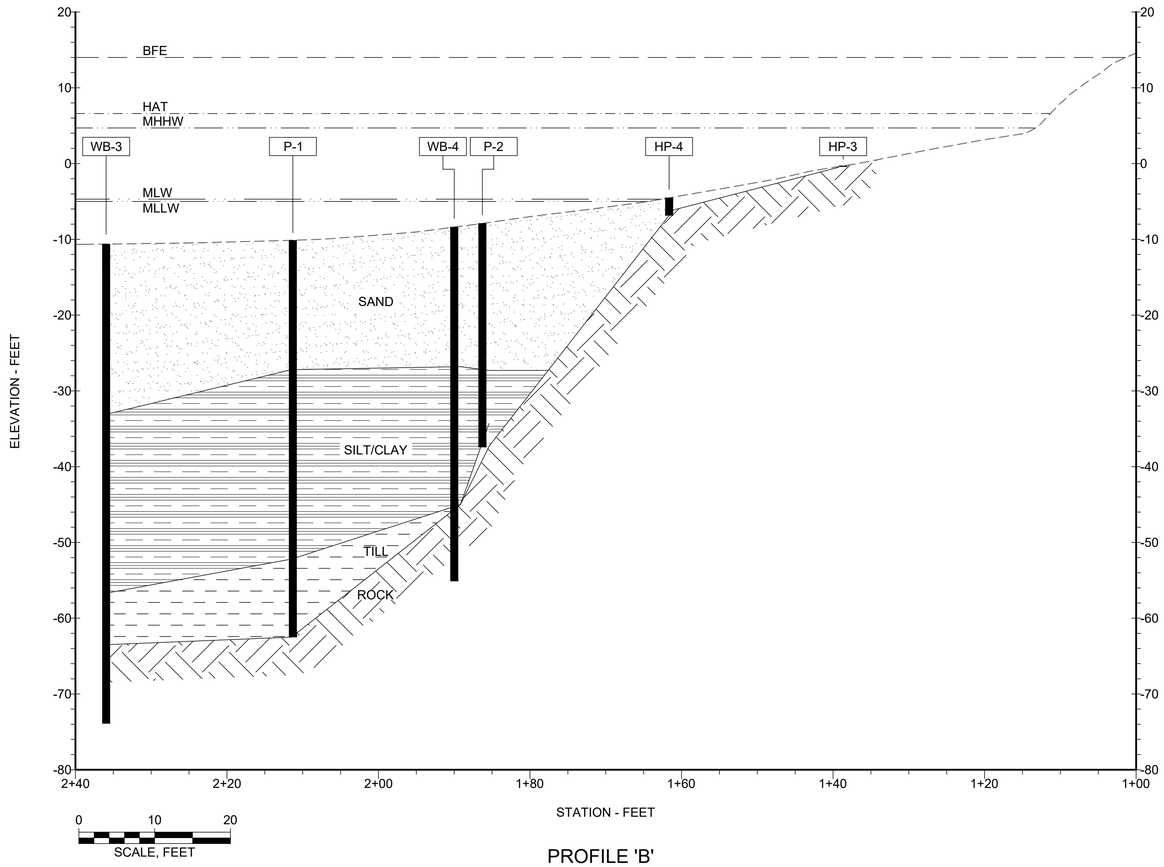

PROFILE 'B'

SCALE: 1" = 10'

FOR PERMIT

ELEVATION	MLLW	NAVD88*
BFE	+19.0	+14.0
HAT	+11.6	+6.6
MHHW	+9.7	+4.7
MHW	+9.3	+4.3
MSL	+4.8	-0.2
MLW	+0.3	-4.7
MLLW	0.0	-5.0

*PROJECT DATUM

Attention:

0 1"

If this scale bar does not measure 1" then drawing is not original scale.

STATE OF MAINE
DANIEL J. BANNON
No. 13033
LICENSED PROFESSIONAL ENGINEER
4/16/2025

Designed:	DJB
Drawn:	JAM
Checked:	BJB
Approved:	BMM
P.E. No:	13033
GEI Project	2203703

GEI Consultants
GEI CONSULTANTS, INC.
5 MILK STREET
PORTLAND, ME 04101
(207)797-8901

UNE
UNIVERSITY OF NEW ENGLAND
11 HILLS BEACH RD.
BIDDEFORD, MAINE

UNIVERSITY OF NEW ENGLAND MARINE SCIENCE CENTER PIER

11 HILLS BEACH ROAD
BIDDEFORD, YORK COUNTY, MAINE

NO	DATE	ISSUE/REVISION	APP
7	4/16/2025	BIDDEFORD PERMIT APP.	DJB
6	9/17/2024	REVISED PERMIT SET	DJB
5	6/27/2024	REVISED PERMIT SET	DJB
4	9/14/2023	DEP PERMIT SET	DJB
3	6/28/2023	75% DESIGN SUBMISSION	DJB
2	2/15/2023	30% DESIGN SUBMISSION	DJB
1	12/9/2022	15% DESIGN SUB REV	DJB
0	11/11/2022	15% DESIGN SUBMISSION	DJB

SHEET NAME

INTERPRETIVE SUBSURFACE PROFILE

SHEET NO.

B-005

BANNON, DAN \\geiconsultants.com\data\Data_Storage\Working\UNIVERSITY OF NEW ENGLAND\2203703 UNE Marine Science Center Pier\00_CAD\Design\Sheets\2203703-B-005.dwg - 4/16/2025

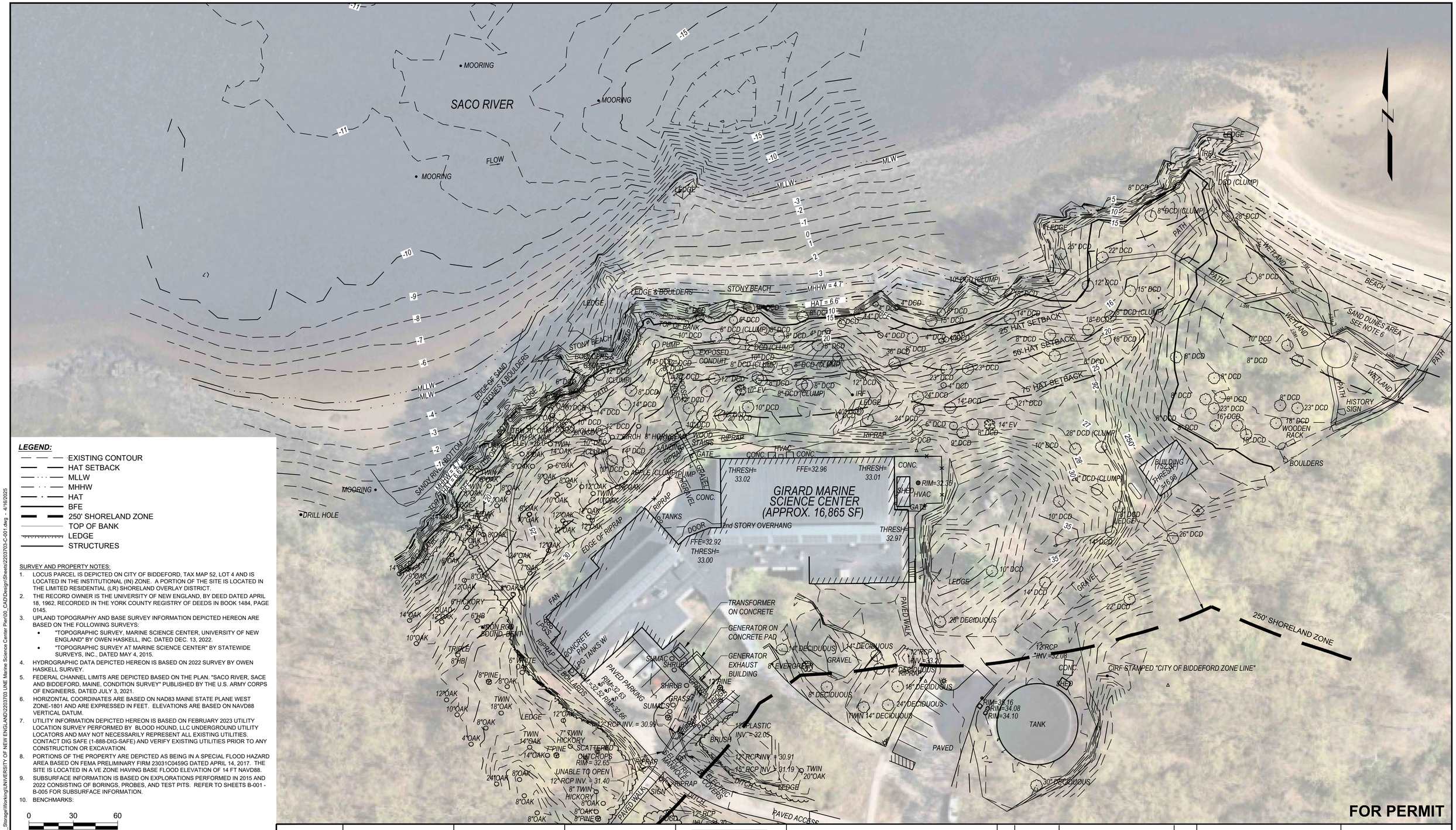

LEGEND:

- EXISTING CONTOUR
- HAT SETBACK
- MLLW
- MHHW
- HAT
- BFE
- 250' SHORELAND ZONE
- TOP OF BANK
- LEDGE
- STRUCTURES

SURVEY AND PROPERTY NOTES:

1. LOCUS PARCEL IS DEPICTED ON CITY OF BIDDEFORD, TAX MAP 52, LOT 4 AND IS LOCATED IN THE INSTITUTIONAL (IN) ZONE. A PORTION OF THE SITE IS LOCATED IN THE LIMITED RESIDENTIAL (LR) SHORELAND OVERLAY DISTRICT.
2. THE RECORD OWNER IS THE UNIVERSITY OF NEW ENGLAND, BY DEED DATED APRIL 18, 1962, RECORDED IN THE YORK COUNTY REGISTRY OF DEEDS IN BOOK 1484, PAGE 0145.
3. UPLAND TOPOGRAPHY AND BASE SURVEY INFORMATION DEPICTED HEREON ARE BASED ON THE FOLLOWING SURVEYS:
   - "TOPOGRAPHIC SURVEY, MARINE SCIENCE CENTER, UNIVERSITY OF NEW ENGLAND" BY OWEN HASKELL, INC. DATED DEC. 13, 2022.
   - "TOPOGRAPHIC SURVEY AT MARINE SCIENCE CENTER" BY STATEWIDE SURVEYS, INC., DATED MAY 4, 2015.
4. HYDROGRAPHIC DATA DEPICTED HEREON IS BASED ON 2022 SURVEY BY OWEN HASKELL SURVEY.
5. FEDERAL CHANNEL LIMITS ARE DEPICTED BASED ON THE PLAN. "SACO RIVER, SACE AND BIDDEFORD, MAINE, CONDITION SURVEY" PUBLISHED BY THE U.S. ARMY CORPS OF ENGINEERS, DATED JULY 3, 2021.
6. HORIZONTAL COORDINATES ARE BASED ON NAD83 MAINE STATE PLANE WEST ZONE-1801 AND ARE EXPRESSED IN FEET. ELEVATIONS ARE BASED ON NAVD88 VERTICAL DATUM.
7. UTILITY INFORMATION DEPICTED HEREON IS BASED ON FEBRUARY 2023 UTILITY LOCATION SURVEY PERFORMED BY BLOOD HOUND, LLC UNDERGROUND UTILITY LOCATORS AND MAY NOT NECESSARILY REPRESENT ALL EXISTING UTILITIES. CONTACT DIG SAFE (1-888-DIG-SAFE) AND VERIFY EXISTING UTILITIES PRIOR TO ANY CONSTRUCTION OR EXCAVATION.
8. PORTIONS OF THE PROPERTY ARE DEPICTED AS BEING IN A SPECIAL FLOOD HAZARD AREA BASED ON FEMA PRELIMINARY FIRM 23031C0459G DATED APRIL 14, 2017. THE SITE IS LOCATED IN A VE ZONE HAVING BASE FLOOD ELEVATION OF 14 FT NAVD88.
9. SUBSURFACE INFORMATION IS BASED ON EXPLORATIONS PERFORMED IN 2015 AND 2022 CONSISTING OF BORINGS, PROBES, AND TEST PITS. REFER TO SHEETS B-001 - B-005 FOR SUBSURFACE INFORMATION.
10. BENCHMARKS:

0 30 60

SCALE, FEET

ELEVATION	MLLW	NAVD88*
BFE	+19.0	+14.0
HAT	+11.6	+6.6
MHHW	+9.7	+4.7
MHW	+9.3	+4.3
MSL	+4.8	-0.2
MLW	+0.3	-4.7
MLLW	0.0	-5.0

*PROJECT DATUM

Attention:

0 1"

If this scale bar does not measure 1" then drawing is not original scale.

DANIEL J. BANNON No. 13033 LICENSED PROFESSIONAL ENGINEER STATE OF MAINE

4/16/2025

Designed:	DJB
Drawn:	JAM
Checked:	BJB
Approved:	BMM
P.E. No:	13033
GEI Project	2203703

GEI Consultants

GEI CONSULTANTS, INC.
5 MILK STREET
PORTLAND, ME 04101
(207)797-8901

UNIVERSITY OF NEW ENGLAND

11 HILLS BEACH RD.
BIDDEFORD, MAINE

UNIVERSITY OF NEW ENGLAND MARINE SCIENCE CENTER PIER

11 HILLS BEACH ROAD
BIDDEFORD, YORK COUNTY, MAINE

NO	DATE	ISSUE/REVISION	
7	4/16/2025	BIDDEFORD PERMIT APP.	DJB
6	9/17/2024	REVISED PERMIT SET	DJB
5	6/27/2024	REVISED PERMIT SET	DJB
4	9/14/2023	DEP PERMIT SET	DJB
3	6/28/2023	75% DESIGN SUBMISSION	DJB
2	2/15/2023	30% DESIGN SUBMISSION	DJB
1	12/9/2022	15% DESIGN SUB REV	DJB
0	11/11/2022	15% DESIGN SUBMISSION	DJB

SHEET NAME

EXISTING CONDITIONS PLAN

SHEET NO.

C-001

BANNON, DAN \\geiconsultants.com\data\Data_Storage\Working\UNIVERSITY OF NEW ENGLAND\2203703 UNE Marine Science Center Pier\00_CAD\Design\Sheets\2203703-C-001.dwg - - 4/16/2025

REMOVE LEDGE
SEE NOTE 2

MHHW = 4.7'

HAT = 6.6'

25' HAT SETBACK

50' HAT SETBACK

75' HAT SETBACK

MLLW

MLW

BFE

GIRARD MARINE
SCIENCE CENTER
(APPROX. 16,865 SF)

FFE=32.96

FFE=32.92

THRESH=
33.02

THRESH=
33.01

THRESH=
32.97

THRESH=
33.00

2nd STORY OVERHANG

BUILDING
(752 SF)
THRESH
=16.98

TRANSFORMER
ON CONCRETE

GENERATOR ON
CONCRETE PAD

GENERATOR
EXHAUST
BUILDING

12" PLASTIC INV. = 32.05

12" RCP INV. = 30.91

15" RCP INV. = 31.19

12" RCP INV. = 30.99

12"RCP
INV.=33.20

RIM=32.35

RIM=35.16
RIM=34.08
RIM=34.10

RIM = 32.65
UNABLE TO OPEN

REMOVE/DEMOLISH
TREE & STUMP,
TYP OF (49)

250' SHORELAND ZONE

CIRR STAMPED "CITY OF BIDDEFORD ZONE LINE"

LEGEND:

— — — LIMIT OF WORK

TREE TO BE REMOVED

NOTES:

1. CONTRACTOR SHALL COORDINATE STAGING OF ALL EQUIPMENT AND MATERIALS OUTSIDE OF THE LIMITS OF WORK AT OFF-SITE LOCATIONS AS APPROVED BY OWNER.
2. FIELD VERIFY EXTENTS OF EXPOSED LEDGE AND REVIEW WITH ENGINEER PRIOR TO REMOVAL.

0 20 40
SCALE, FEET

ELEVATION	MLLW	NAVD88*
BFE	+19.0	+14.0
HAT	+11.6	+6.6
MHHW	+9.7	+4.7
MHW	+9.3	+4.3
MSL	+4.8	-0.2
MLW	+0.3	-4.7
MLLW	0.0	-5.0

*PROJECT DATUM

FOR PERMIT

Attention:
0 1"
If this scale bar does not measure 1" then drawing is not original scale.

STATE OF MAINE
DANIEL J. BANNON
No. 13033
LICENSED PROFESSIONAL ENGINEER
4/16/2025

Designed:	DJB
Drawn:	JAM
Checked:	BJB
Approved:	BMM
P.E. No:	13033
GEI Project	2203703

GEI Consultants
GEI CONSULTANTS, INC.
5 MILK STREET
PORTLAND, ME 04101
(207)797-8901

UNIVERSITY OF
NEW ENGLAND

11 HILLS BEACH RD.
BIDDEFORD, MAINE

UNIVERSITY OF NEW ENGLAND MARINE SCIENCE CENTER PIER

11 HILLS BEACH ROAD
BIDDEFORD, YORK COUNTY, MAINE

NO	DATE	ISSUE/REVISION	APP
7	4/16/2025	BIDDEFORD PERMIT APP.	DJB
6	9/17/2024	REVISED PERMIT SET	DJB
5	6/27/2024	REVISED PERMIT SET	DJB
4	9/14/2023	DEP PERMIT SET	DJB
3	6/28/2023	75% DESIGN SUBMISSION	DJB
2	2/15/2023	30% DESIGN SUBMISSION	DJB
1	12/9/2022	15% DESIGN SUB REV	DJB
0	11/11/2022	15% DESIGN SUBMISSION	DJB

SHEET NAME

DEMOLITION AND CONSTRUCTION STAGING

SHEET NO.

C-002

BANNON, DAN \\gisconsultants.com\data\Data_Storage\Working\UNIVERSITY OF NEW ENGLAND\2203703 UNE Marine Science Center Pier\00_CAD\Design\Sheets\2203703-C-002.dwg - 4/16/2025

ZONING COMPLIANCE

PROPERTY ADDRESS	11 HILLS BEACH ROAD, CITY OF BIDDEFORD, MAINE		
TAX PARCEL ID	TAX MAP 52, LOT 4		
ZONING DISTRICT	INSTITUTIONAL (IN) ZONE WITH LIMITED RESIDENTIAL (LR) SHORELAND OVERLAY		
PROPOSED USE	MARINE RESEARCH FACILITY		
ITEM	**REQUIRED**	*EXISTING*	**PROPOSED**
MINIMUM LOT AREA	40,000	*>40,000 SF*	>40,000 SF
MINIMUM SHORE FRONTAGE	200 FT	*2,780 SF*	2,780 SF
MAXIMUM IMPERVIOUS (NORTH OF ROUTE 9)	N/A	*5%*	15%
SETBACK FROM HILLS BEACH RD	50 FT	*375 FT*	375 FT
SETBACK FROM PERIMETER OF THE INSTITUTIONAL ZONE	50 FT	*>50 FT*	>50 FT

(1) REQUIRED ZONING INFORMATION IN THIS TABLE IS TAKEN FROM V ATTACHMENT 2 "ESTABLISHMENT OF ZONES" SUPP 11, FEB 2022

PROPOSED PIER SYSTEM (SEE SHEETS S-001 - S-004).

REROUTE BEACH ACCESS PATH (BY OTHERS).

INSTALL 300 LF GUARDRAIL (SEE DETAIL).

LIMITS OF VEGETATION CLEARING, TYP.

PROPOSED STORMWATER COLLECTION RAIN GARDENS

ACCESS ROAD TURNAROUND

PROPOSED (2) "NO VEHICULAR ACCESS BEYOND THIS POINT" SIGNS, TYP. (SEE DETAIL)

GIRARD MARINE SCIENCE CENTER (APPROX. 16,865 SF)

20' WIDE PAVED ACCESS ROAD, TYP.

PROPOSED R-1-1 30"X 30" STOP SIGN, TYP (SEE DETAIL).

PROPOSED PAVED ACCESS ROAD (SEE DETAIL, SHEET C-008).

250' SHORELAND ZONE

PROPOSED 24" WIDE WHITE STOP BAR, TYP (SEE DETAIL).

PROPOSED SAWCUT AND SEALING OF EXISTING PAVEMENT. MATCH INTO EXISTING PAVEMENT TYP.

CIRF STAMPED "CITY OF BIDDEFORD ZONE LINE"

N: 228236.91
E: 2895702.79

0 20 40
SCALE, FEET

APPROVAL
CITY OF BIDDEFORD PLANNING BOARD

APPROVED BY: DATE:

CENTERLINE ALIGNMENT TABLE

SEGMENT ID	START	END	LENGTH (FEET)	CHORD LENGTH (FEET)	CURVE RADIUS (FEET)	DELTA ANGLE (DEGREES, MIN, SEC)
1	1+00	1+09.02	9.02			
2	1+09.02	1+47.32	38.30	38.26	241.93	9d4'13"
3	1+47.32	1+90.83	43.51	43.50	500.00	4d59'10"
4	1+90.83	2+99.52	108.69	108.35	400.00	15d34'5"
5	2+99.52	3+76.76	77.24	71.05	55.00	80d27'50"
6	3+76.76	5+88.65	211.89	209.42	400.00	30d21'2"
7	5+88.65	6+33.77	45.13	43.61	50.00	51d42'47"
8	6+33.77	6+60	26.23			

ELEVATION	MLLW	NAVD88*
BFE	+19.0	+14.0
HAT	+11.6	+6.6
MHHW	+9.7	+4.7
MHW	+9.3	+4.3
MSL	+4.8	-0.2
MLW	+0.3	-4.7
MLLW	0.0	-5.0

*PROJECT DATUM

Attention:
0 1"
If this scale bar does not measure 1" then drawing is not original scale.

STATE OF MAINE
DANIEL J. BANNON
No. 13033
LICENSED PROFESSIONAL ENGINEER
4/16/2025

Designed:	DJB
Drawn:	JAM
Checked:	BJB
Approved:	BMM
P.E. No:	13033
GEI Project	2203703

GEI Consultants
GEI CONSULTANTS, INC.
5 MILK STREET
PORTLAND, ME 04101
(207)797-8901

UNIVERSITY OF NEW ENGLAND
11 HILLS BEACH RD.
BIDDEFORD, MAINE

UNIVERSITY OF NEW ENGLAND MARINE SCIENCE CENTER PIER

11 HILLS BEACH ROAD
BIDDEFORD, YORK COUNTY, MAINE

NO	DATE	ISSUE/REVISION	APP
7	4/16/2025	BIDDEFORD PERMIT APP.	DJB
6	9/17/2024	REVISED PERMIT SET	DJB
5	6/27/2024	REVISED PERMIT SET	DJB
4	9/14/2023	DEP PERMIT SET	DJB
3	6/28/2023	75% DESIGN SUBMISSION	DJB
2	2/15/2023	30% DESIGN SUBMISSION	DJB
1	12/9/2022	15% DESIGN SUB REV	DJB
0	11/11/2022	15% DESIGN SUBMISSION	DJB

SHEET NAME: **SITE PLAN**

SHEET NO.: **C-003**

FOR PERMIT

BANNON, DAN \\geiconsultants.com\data\Data_Storage\Working\UNIVERSITY OF NEW ENGLAND\2203703 UNE Marine Science Center Pier\00_CAD\Design\Sheets\2203703-C-003.dwg - 4/16/2025

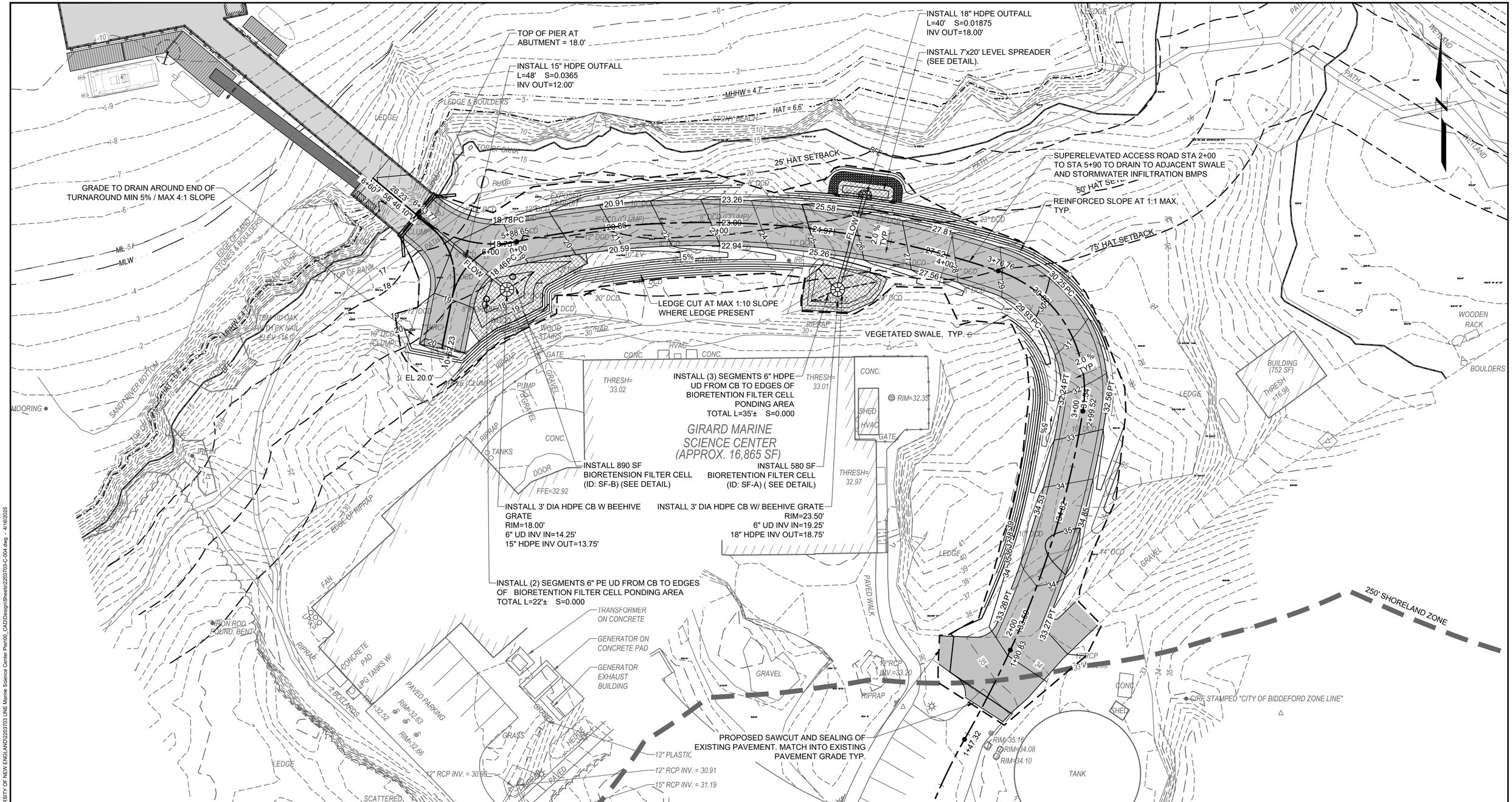

PLAN
SCALE: 1" = 20'

FOR PERMIT

0 20 40
SCALE, FEET

Attention:
0 1"
If this scale bar does not measure 1" then drawing is not original scale.

STATE OF MAINE
DANIEL J. BANNON
No. 13033
LICENSED PROFESSIONAL ENGINEER
4/16/2025

Designed:	DJB
Drawn:	JAM
Checked:	BJB
Approved:	BMM
P.E. No:	13033
GEI Project	2203703

GEI Consultants
GEI CONSULTANTS, INC.
5 MILK STREET
PORTLAND, ME 04101
(207)797-8901

UNE
UNIVERSITY OF NEW ENGLAND
11 HILLS BEACH RD.
BIDDEFORD, MAINE

UNIVERSITY OF NEW ENGLAND MARINE SCIENCE CENTER PIER
11 HILLS BEACH ROAD
BIDDEFORD, YORK COUNTY, MAINE

NO	DATE	ISSUE/REVISION	APP
7	4/16/2025	BIDDEFORD PERMIT APP.	DJB
6	9/17/2024	REVISED PERMIT SET	DJB
5	6/27/2024	REVISED PERMIT SET	DJB
4	9/14/2023	DEP PERMIT SET	DJB
3	6/28/2023	75% DESIGN SUBMISSION	DJB
2	2/15/2023	30% DESIGN SUBMISSION	DJB
1	12/9/2022	15% DESIGN SUB REV	DJB
0	11/11/2022	15% DESIGN SUBMISSION	DJB

SHEET NAME
GRADING AND DRAINAGE PLAN

SHEET NO.
C-004

BANNON, DAN \\geiconsultants.com\data\Data_Storage\Working\UNIVERSITY OF NEW ENGLAND\2203703 UNE Marine Science Center Pier\00_CAD\Design\Sheets\2203703-C-004.dwg - 4/16/2025

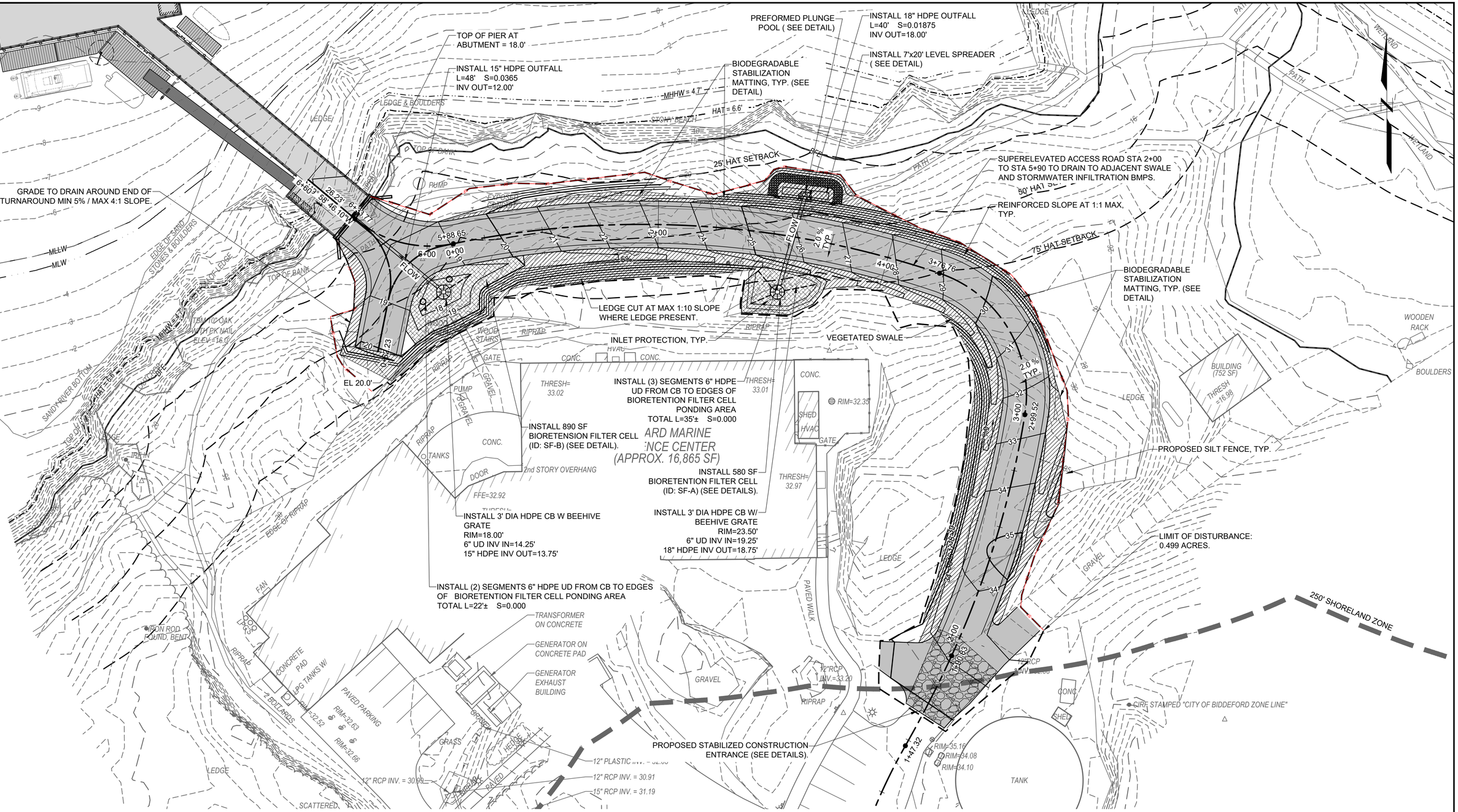

PLAN
SCALE: 1" = 20'

NOTE:
CONTRACTOR SHALL INSTALL BIODEGRADABLE STABILIZATION MATTING WHEREVER PROPOSED SLOPES EXCEED 5H:1V.

FOR PERMIT

0 20 40
SCALE, FEET

Attention:
0 1"
If this scale bar does not measure 1" then drawing is not original scale.

STATE OF MAINE
DANIEL J. BANNON
No. 13033
LICENSED PROFESSIONAL ENGINEER
4/16/2025

Designed:	DJB
Drawn:	JAM
Checked:	BJB
Approved:	BMM
P.E. No:	13033
GEI Project	2203703

GEI Consultants
GEI CONSULTANTS, INC.
5 MILK STREET
PORTLAND, ME 04101
(207)797-8901

UNE
UNIVERSITY OF NEW ENGLAND
11 HILLS BEACH RD.
BIDDEFORD, MAINE

UNIVERSITY OF NEW ENGLAND MARINE SCIENCE CENTER PIER
11 HILLS BEACH ROAD
BIDDEFORD, YORK COUNTY, MAINE

NO	DATE	ISSUE/REVISION	APP
7	4/16/2025	BIDDEFORD PERMIT APP.	DJB
6	9/17/2024	REVISED PERMIT SET	DJB
5	6/27/2024	REVISED PERMIT SET	DJB
4	9/14/2023	DEP PERMIT SET	DJB
3	6/28/2023	75% DESIGN SUBMISSION	DJB
2	2/15/2023	30% DESIGN SUBMISSION	DJB
1	12/9/2022	15% DESIGN SUB REV	DJB
0	11/11/2022	15% DESIGN SUBMISSION	DJB

SHEET NAME
EROSION CONTROL PLAN

SHEET NO.
C-005

BANNON, DAN \\geiconsultants.com\data\Data_Storage\Working\UNIVERSITY OF NEW ENGLAND\2203703 UNE Marine Science Center Pier\00_CAD\Design\Sheets\2203703-C-005.dwg - 4/16/2025

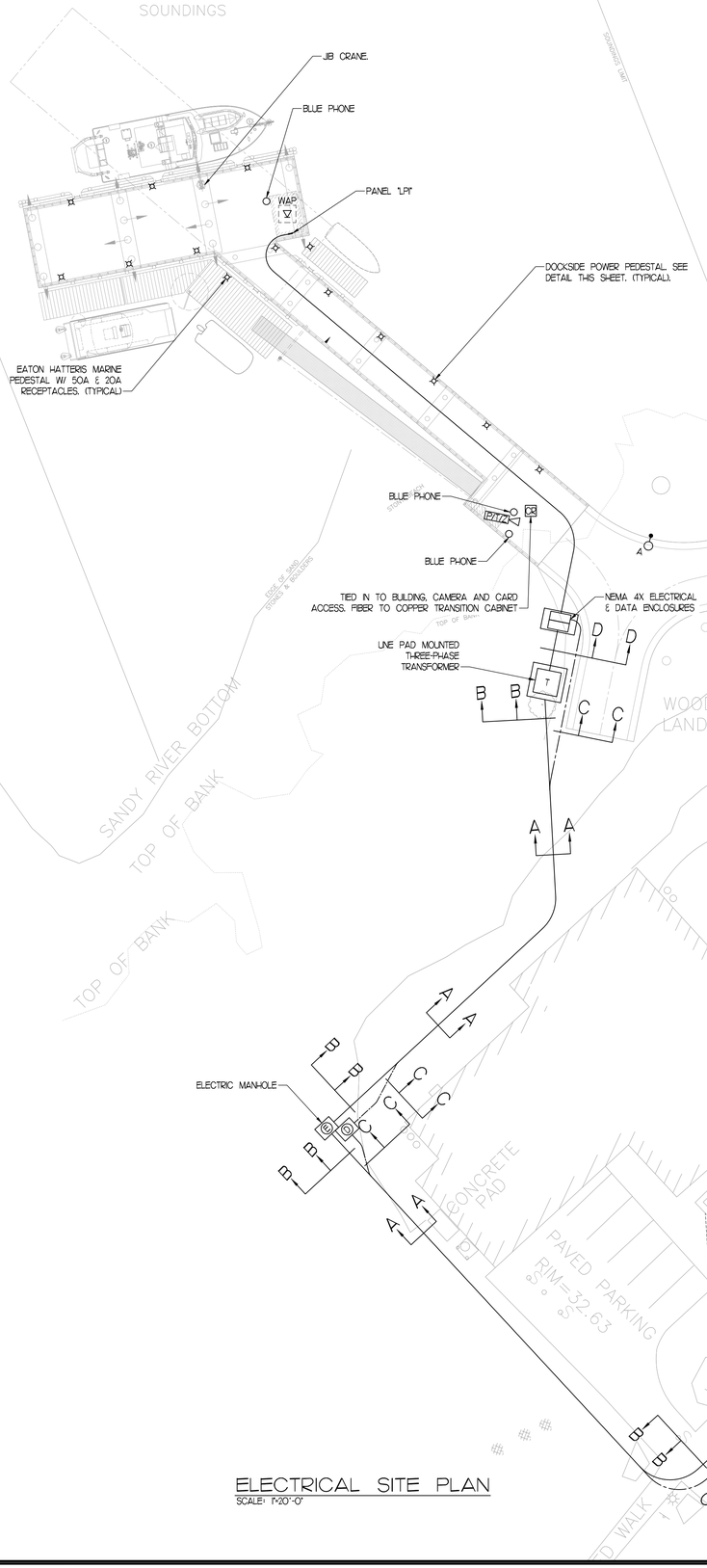

ELECTRICAL SITE PLAN
SCALE: 1"-20'-0"

Hatteras Light Power Pedestal - Specifications

Product Features (cont.)

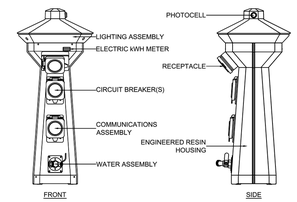

Dimensions

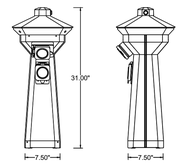

www.marinapower.com 1-800-723-8009 **Hatteras Light** - Product Specifications

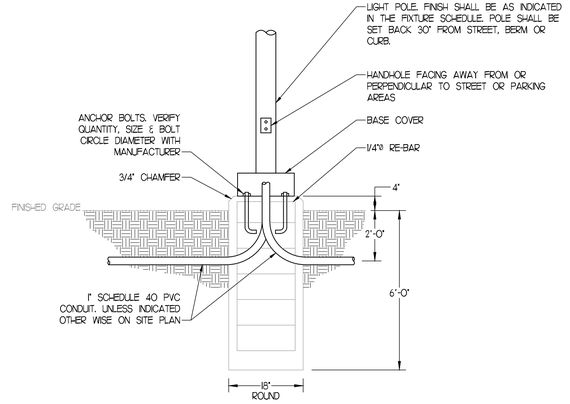

POLE BASE DETAIL
NOT TO SCALE

BEACON
HUBB-CAP-2HBL-50-4K7-UNV-2-PCU-GEN1-XX-PM-NRNW-ELT-BC.
& POLE, BEACON #RSA-B-KENS-S/F-20-40-B-OT-BLS.
MOUNTED @20'-0" A.F.G. (TYPICAL FOR ALL "A" FIXTURES.)

VINCENT A. DiORIO, INC.
est. 1972
CONSULTING ENGINEERS
89 Access Rd. Suite 18
Norwood, MA 02062
(781)255-9754 | vadjr@vadeng.com
www.vadeng.com

REVISIONS:

REV.:	DATE:	DESCRIPTION:

CLIENT:
UNIVERSITY OF NEW ENGLAND

PROJECT:
MARINE SCIENCE CENTER PIER
11 HILLS BEACH ROAD
BIDDEFORD, MAINE

DRAWING TITLE
ELECTRICAL SITE PLAN

DRAWN:	CWQ
CHECKED:	VAD Jr
SCALE:	AS INDICATED
DATE:	APRIL 15, 2025

ES1.1

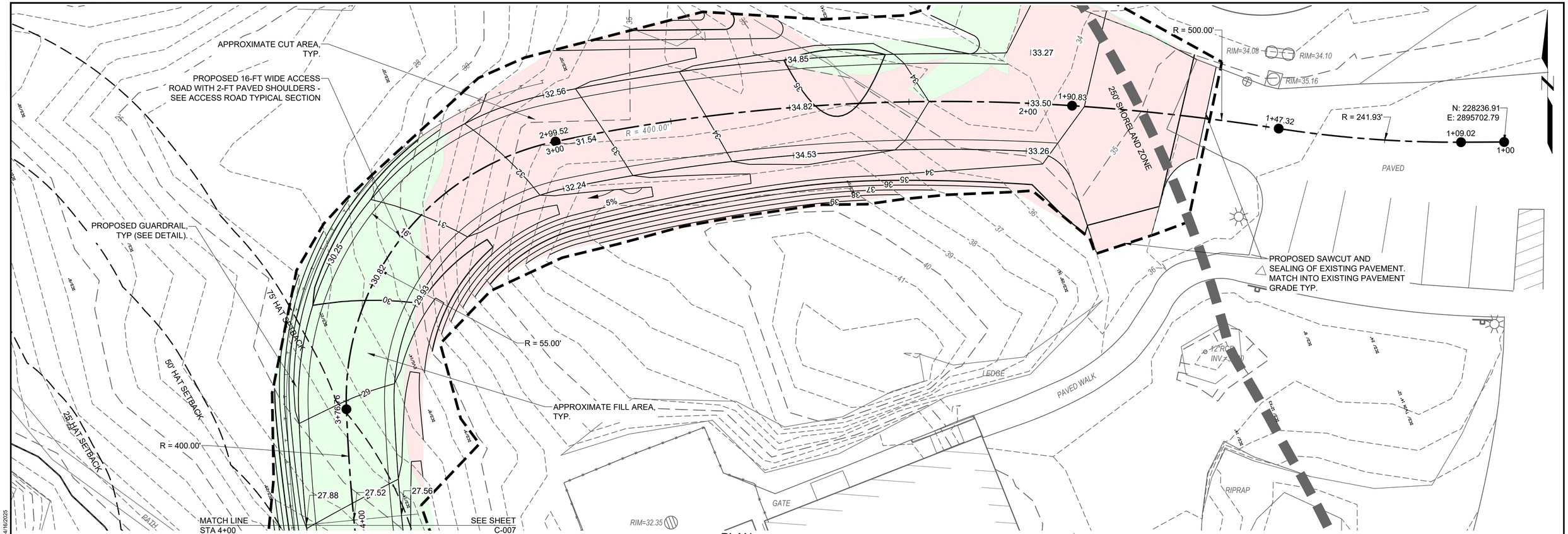

0 10 20
SCALE, FEET

PLAN
SCALE: 1" = 10'

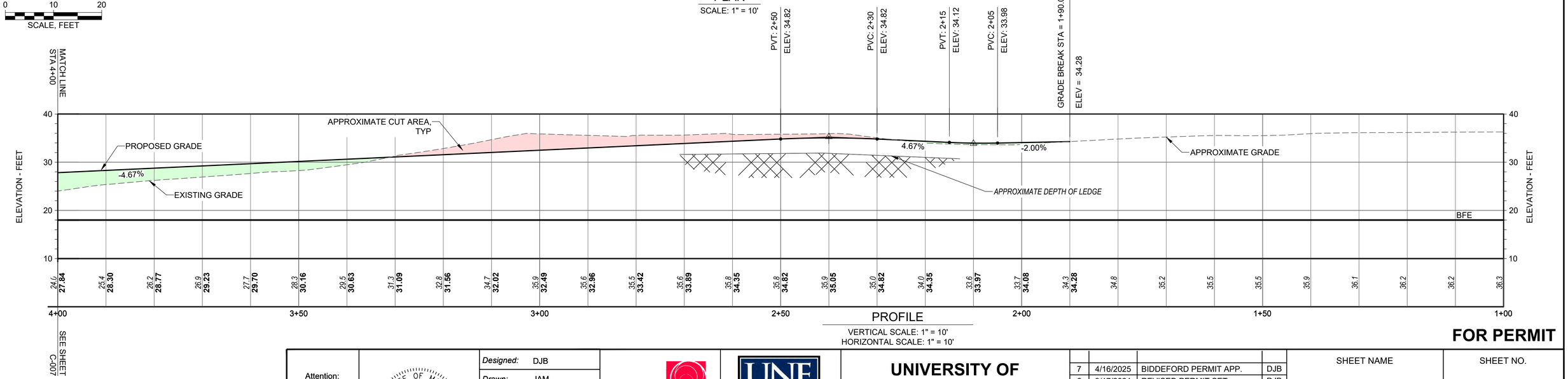

PROFILE
VERTICAL SCALE: 1" = 10'
HORIZONTAL SCALE: 1" = 10'

FOR PERMIT

CUT/FILL ANALYSIS

STRUCTURE	QUANTITY (CY)
CUT	2174.50
FILL	782.30
NET (FILL)	1392.20

Attention:
0 1"
If this scale bar does not measure 1" then drawing is not original scale.

STATE OF MAINE
DANIEL J. BANNON
No. 13033
LICENSED PROFESSIONAL ENGINEER
4/16/2025

Designed:	DJB
Drawn:	JAM
Checked:	BJB
Approved:	BMM
P.E. No:	13033
GEI Project	2203703

GEI Consultants
GEI CONSULTANTS, INC.
5 MILK STREET
PORTLAND, ME 04101
(207)797-8901

UNE
UNIVERSITY OF NEW ENGLAND
11 HILLS BEACH RD.
BIDDEFORD, MAINE

UNIVERSITY OF NEW ENGLAND MARINE SCIENCE CENTER PIER
11 HILLS BEACH ROAD
BIDDEFORD, YORK COUNTY, MAINE

NO	DATE	ISSUE/REVISION	APP
7	4/16/2025	BIDDEFORD PERMIT APP.	DJB
6	9/17/2024	REVISED PERMIT SET	DJB
5	6/27/2024	REVISED PERMIT SET	DJB
4	9/14/2023	DEP PERMIT SET	DJB
3	6/28/2023	75% DESIGN SUBMISSION	DJB
2	2/15/2023	30% DESIGN SUBMISSION	DJB
1	12/9/2022	15% DESIGN SUB REV	DJB
0	11/11/2022	15% DESIGN SUBMISSION	DJB

SHEET NAME
ACCESS ROAD PLAN AND PROFILE STA 1+00 TO 4+00

SHEET NO.
C-006

BANNON, DAN \\geiconsultants.com\data\Data_Storage\Working\UNIVERSITY OF NEW ENGLAND\2203703 UNE Marine Science Center Pier\00_CAD\Design\Sheets\2203703-C-006 C-007.dwg - 4/16/2025

INSTALL 15" HDPE OUTFALL
L=48' S=0.0365
INV OUT=12.00'

APPROXIMATE CUT AREA, TYP.

PROPOSED 16-FT WIDE ACCESS ROAD WITH 2-FT PAVED SHOULDERS - SEE ACCESS ROAD TYPICAL SECTION

PROPOSED GUARDRAIL, TYP (SEE DETAIL).

INSTALL 18" HDPE OUTFALL
L=40' S=0.01875
INV OUT=18.00'

APPROXIMATE FILL AREA, TYP.

25' NAT SETBACK

50' NAT SETBACK

SEE SHEET C-006

R = 400.00'

R = 50.00'

R = 20.0'

R = 55.00'

MATCH LINE STA 4+00

INSTALL 3' DIA HDPE CB W BEEHIVE GRATE
RIM=18.00'
6" UD INV IN=14.25'
15" HDPE INV OUT=13.75'

INSTALL 3' DIA HDPE CB W/ BEEHIVE GRATE
RIM=23.50'
6" UD INV IN=19.25'
18" HDPE INV OUT=18.75'

GIRARD MARINE SCIENCE CENTER

PLAN
SCALE: 1" = 10'

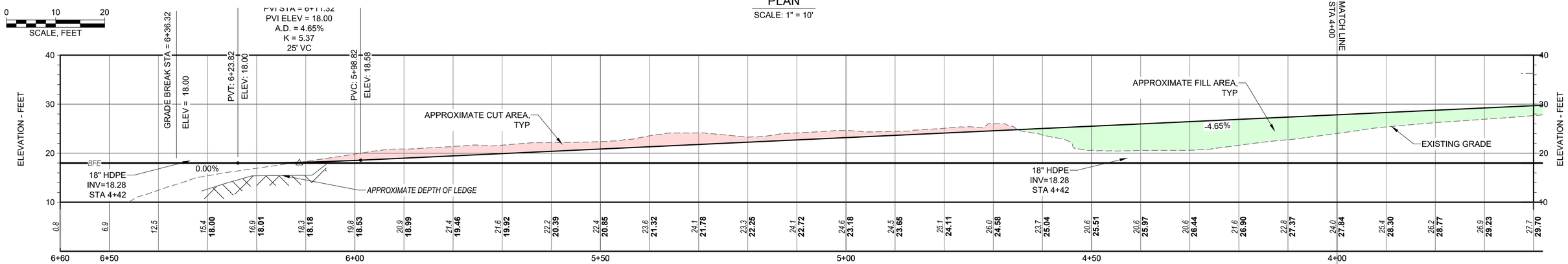

PROFILE
VERTICAL SCALE: 1" = 10'
HORIZONTAL SCALE: 1" = 10'

CUT/FILL ANALYSIS

STRUCTURE	QUANTITY (CY)
CUT	2174.50
FILL	782.30
NET (FILL)	1392.20

FOR PERMIT

Attention:
0 1"
If this scale bar does not measure 1" then drawing is not original scale.

STATE OF MAINE
DANIEL J. BANNON
No. 13033
LICENSED PROFESSIONAL ENGINEER
4/16/2025

Designed:	DJB
Drawn:	JAM
Checked:	BJB
Approved:	BMM
P.E. No:	13033
GEI Project	2203703

GEI Consultants
GEI CONSULTANTS, INC.
5 MILK STREET
PORTLAND, ME 04101
(207)797-8901

UNIVERSITY OF NEW ENGLAND
11 HILLS BEACH RD.
BIDDEFORD, MAINE

UNIVERSITY OF NEW ENGLAND MARINE SCIENCE CENTER PIER

11 HILLS BEACH ROAD
BIDDEFORD, YORK COUNTY, MAINE

NO	DATE	ISSUE/REVISION	APP
7	4/16/2025	BIDDEFORD PERMIT APP.	DJB
6	9/17/2024	REVISED PERMIT SET	DJB
5	6/27/2024	REVISED PERMIT SET	DJB
4	9/14/2023	DEP PERMIT SET	DJB
3	6/28/2023	75% DESIGN SUBMISSION	DJB
2	2/15/2023	30% DESIGN SUBMISSION	DJB
1	12/9/2022	15% DESIGN SUB REV	DJB
0	11/11/2022	15% DESIGN SUBMISSION	DJB

SHEET NAME
ACCESS ROAD PLAN AND PROFILE STA 4+00 TO STA 6+60

SHEET NO.
C-007

BANNON, DAN \\geiconsultants.com\data\Data_Storage\Working\UNIVERSITY OF NEW ENGLAND\2203703 UNE Marine Science Center Pier\00_CAD\Design\Sheets\2203703-C-006 C-007.dwg - 4/16/2025

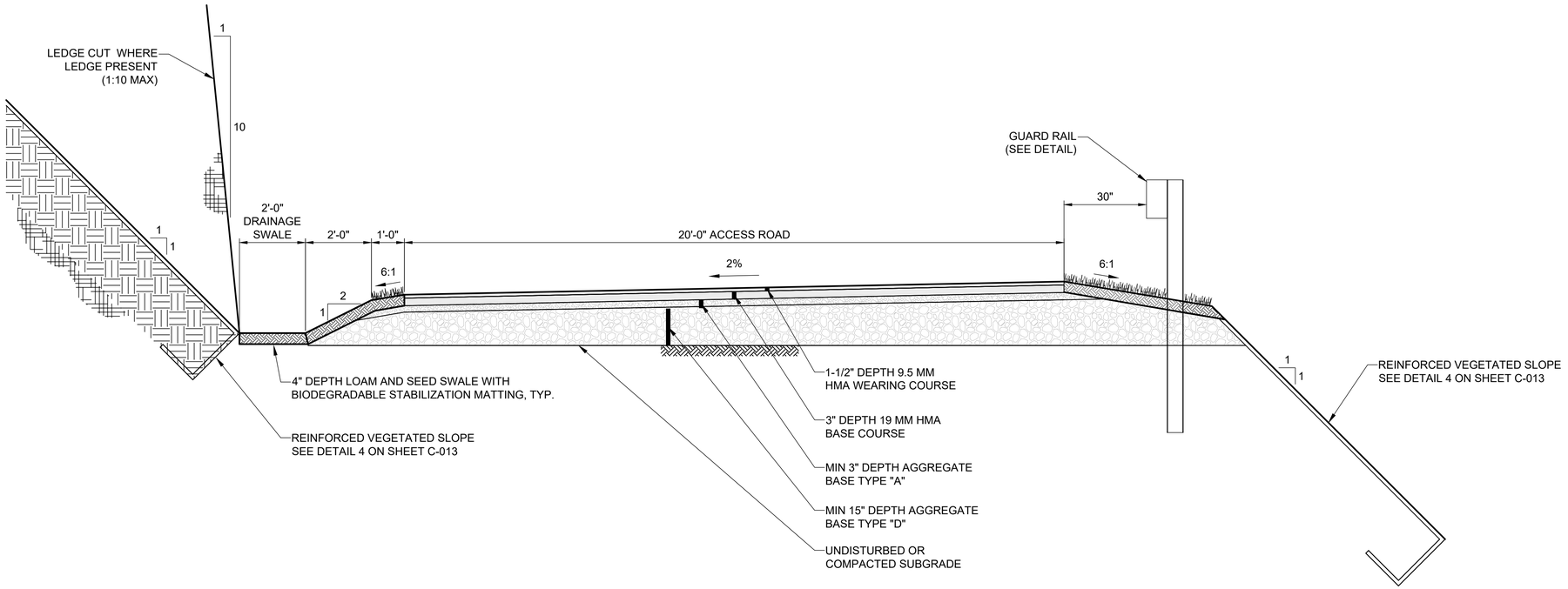

TYPICAL ACCESS ROAD SECTION

SCALE: NTS

FOR PERMIT

Attention:

0 1"

If this scale bar does not measure 1" then drawing is not original scale.

STATE OF MAINE
DANIEL J. BANNON
No. 13033
LICENSED PROFESSIONAL ENGINEER
4/16/2025

Designed:	DJB
Drawn:	JAM
Checked:	BJB
Approved:	BMM
P.E. No:	13033
GEI Project	2203703

GEI Consultants
GEI CONSULTANTS, INC.
5 MILK STREET
PORTLAND, ME 04101
(207)797-8901

UNE
UNIVERSITY OF NEW ENGLAND
11 HILLS BEACH RD.
BIDDEFORD, MAINE

UNIVERSITY OF NEW ENGLAND MARINE SCIENCE CENTER PIER

11 HILLS BEACH ROAD
BIDDEFORD, YORK COUNTY, MAINE

NO	DATE	ISSUE/REVISION	APP
7	4/16/2025	BIDDEFORD PERMIT APP.	DJB
6	9/17/2024	REVISED PERMIT SET	DJB
5	6/27/2024	REVISED PERMIT SET	DJB
4	9/14/2023	DEP PERMIT SET	DJB
3	6/28/2023	75% DESIGN SUBMISSION	DJB
2	2/15/2023	30% DESIGN SUBMISSION	DJB
1	12/9/2022	15% DESIGN SUB REV	DJB
0	11/11/2022	15% DESIGN SUBMISSION	DJB

SHEET NAME

ACCESS ROAD TYPICAL SECTION

SHEET NO.

C-008

BANNON, DAN \\geiconsultants.com\data\Data_Storage\Working\UNIVERSITY OF NEW ENGLAND\2203703 UNE Marine Science Center Pier\00_CAD\Design\Sheets\2203703-C-008.dwg - 4/16/2025

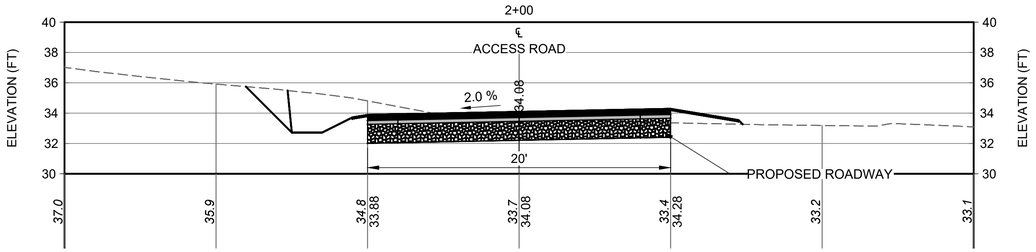

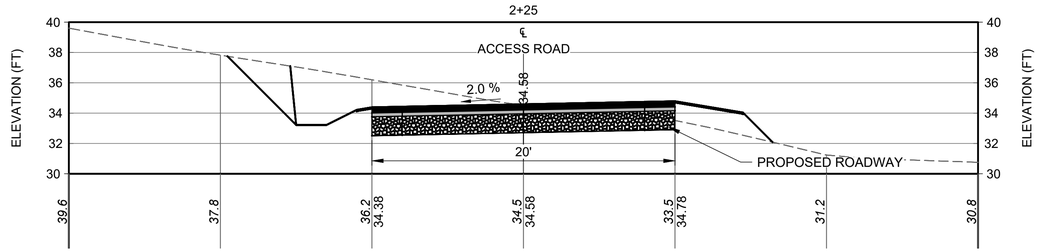

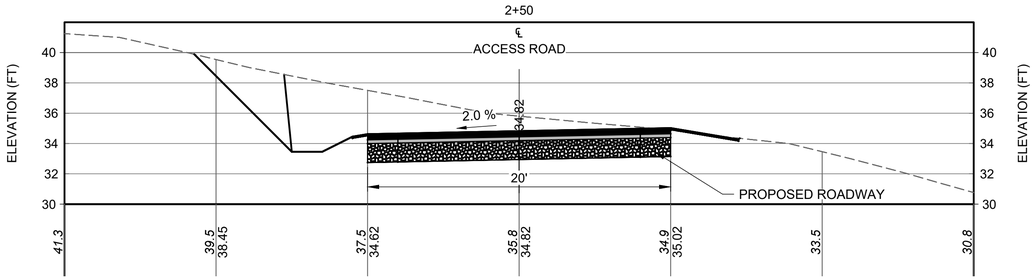

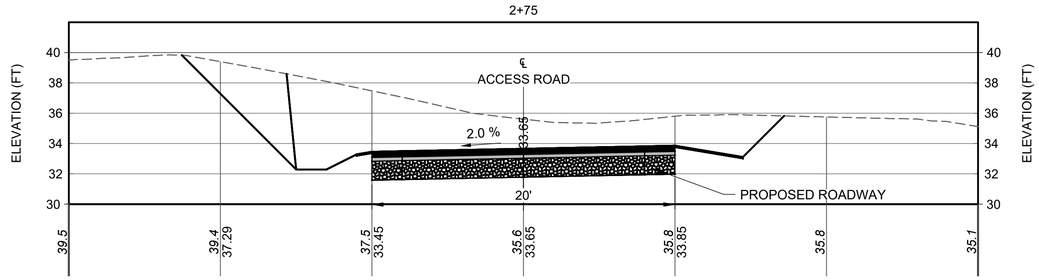

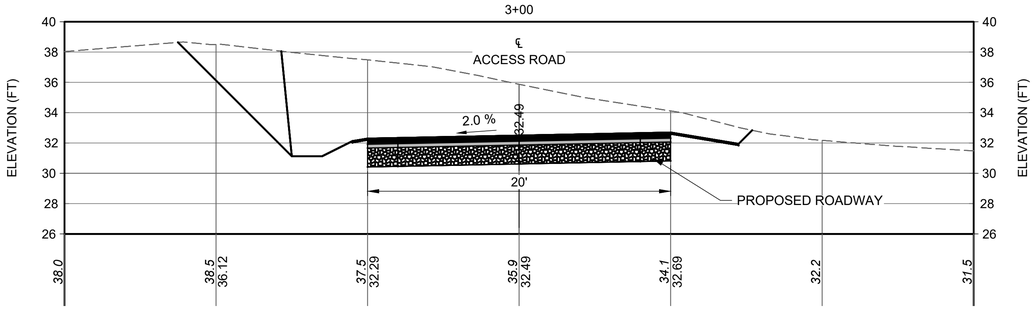

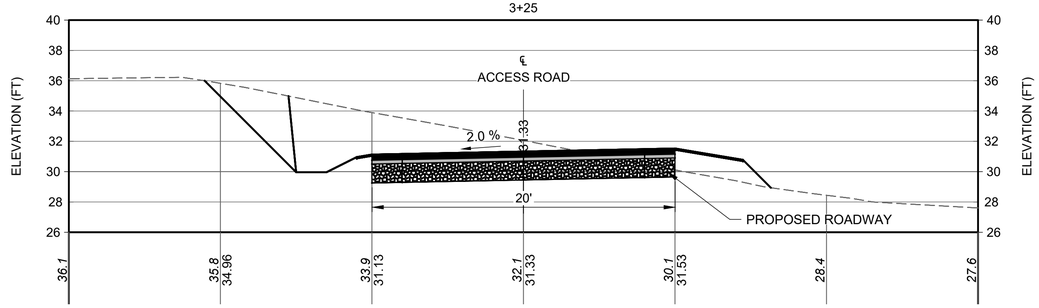

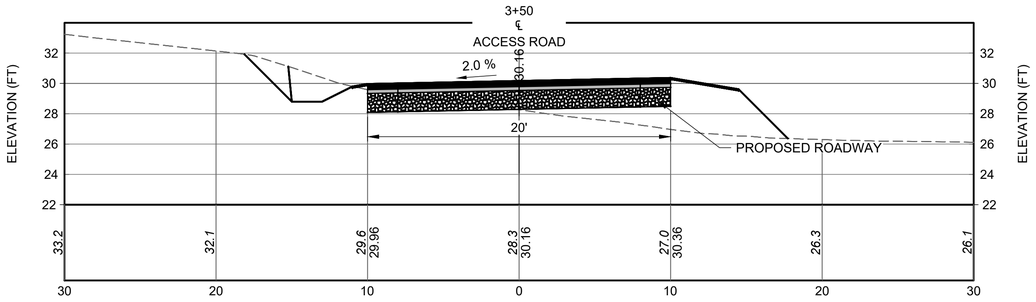

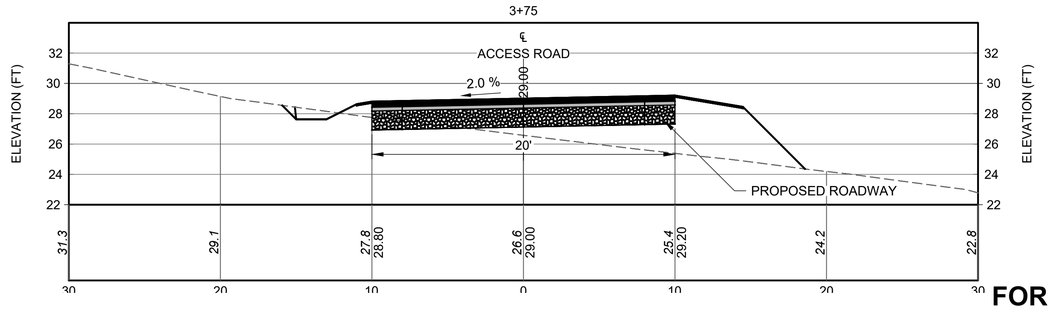

FOR PERMIT

0 2.5 5 10
SCALE, FEET

Attention:
0 1"
If this scale bar does not measure 1" then drawing is not original scale.

STATE OF MAINE
DANIEL J. BANNON
No. 13033
LICENSED PROFESSIONAL ENGINEER
4/16/2025

Designed:	DJB
Drawn:	JAM
Checked:	BJB
Approved:	BMM
P.E. No:	13033
GEI Project	2203703

GEI Consultants
GEI CONSULTANTS, INC.
5 MILK STREET
PORTLAND, ME 04101
(207)797-8901

UNE
UNIVERSITY OF NEW ENGLAND
11 HILLS BEACH RD.
BIDDEFORD, MAINE

UNIVERSITY OF NEW ENGLAND MARINE SCIENCE CENTER PIER

11 HILLS BEACH ROAD
BIDDEFORD, YORK COUNTY, MAINE

NO	DATE	ISSUE/REVISION	APP
7	4/16/2025	BIDDEFORD PERMIT APP.	DJB
6	9/17/2024	REVISED PERMIT SET	DJB
5	6/27/2024	REVISED PERMIT SET	DJB
4	9/14/2023	DEP PERMIT SET	DJB
3	6/28/2023	75% DESIGN SUBMISSION	DJB
2	2/15/2023	30% DESIGN SUBMISSION	DJB
1	12/9/2022	15% DESIGN SUB REV	DJB
0	11/11/2022	15% DESIGN SUBMISSION	DJB

SHEET NAME
ROAD ACCESS SECTIONS STA 2+00 TO 3+75

SHEET NO.
C-009

BANNON, DAN \\geiconsultants.com\data\Data_Storage\Working\UNIVERSITY OF NEW ENGLAND\2203703 UNE Marine Science Center Pier\00_CAD\Design\Sheets\2203703-C-009 C-010.dwg - 4/16/2025

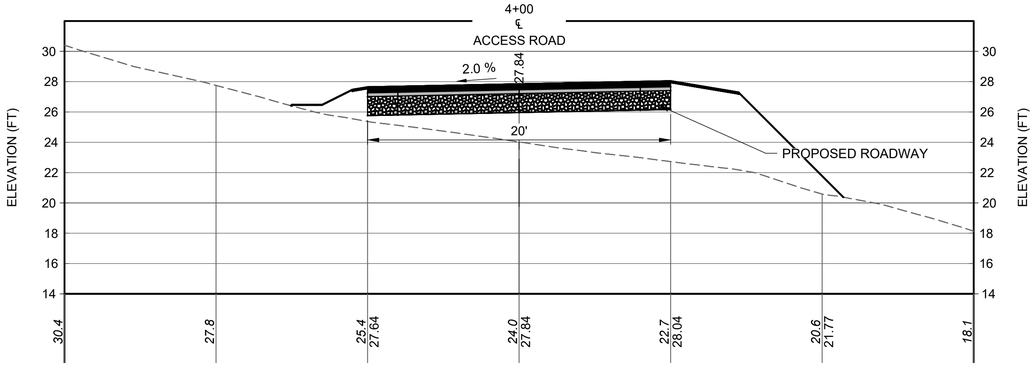

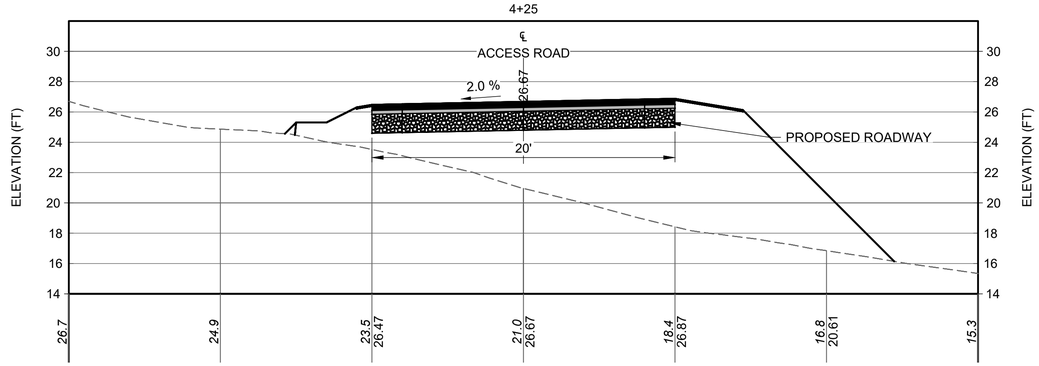

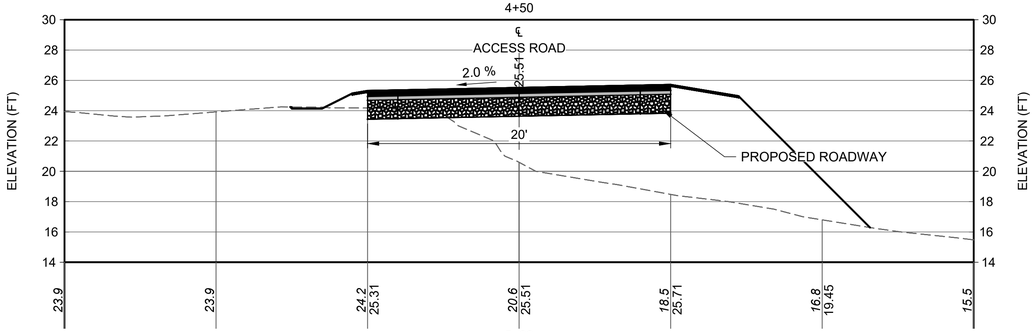

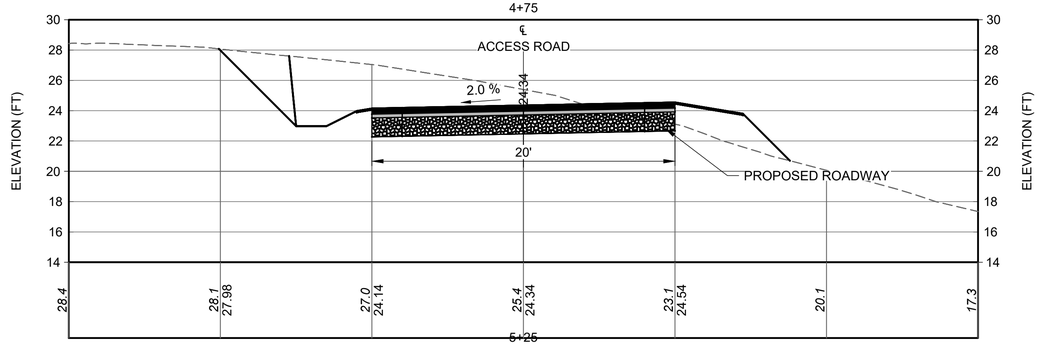

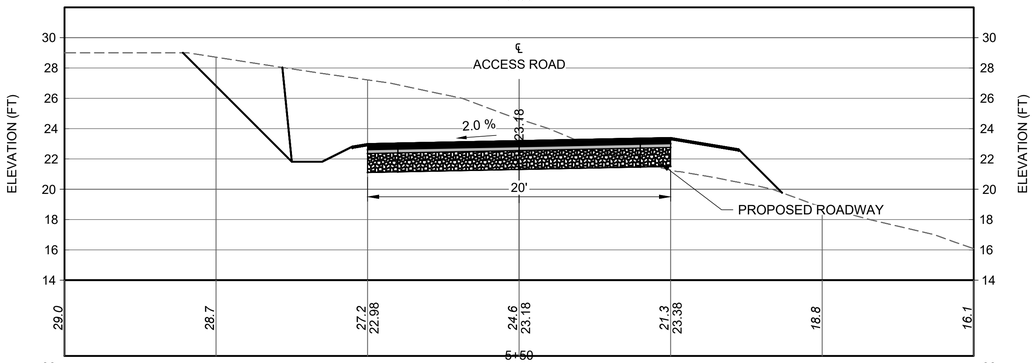

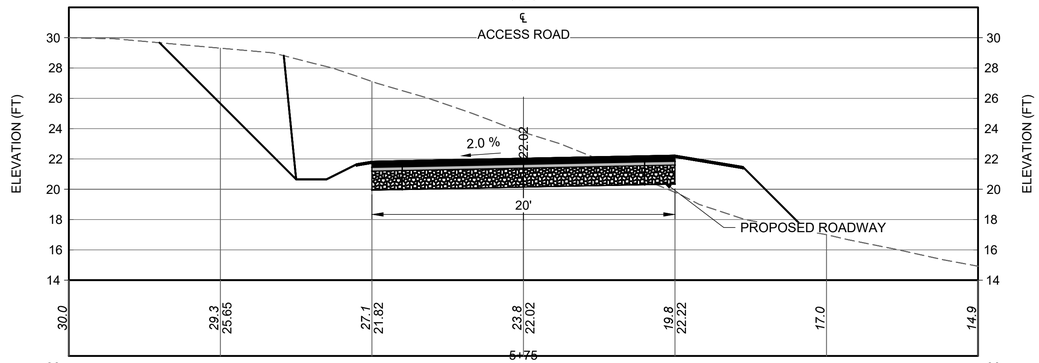

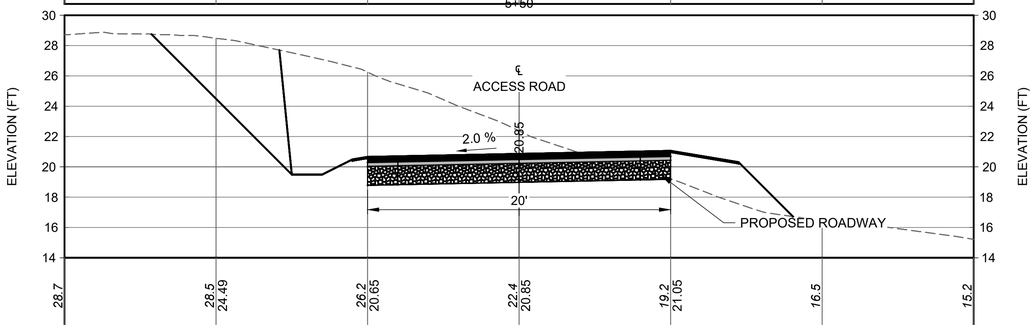

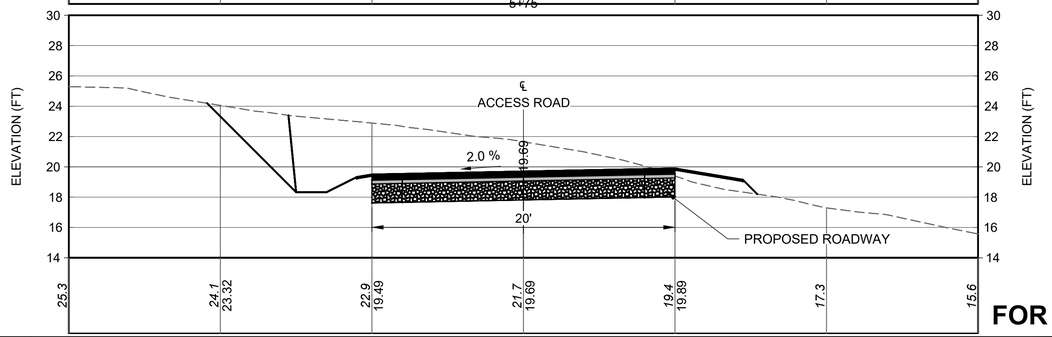

FOR PERMIT

0 2.5 5 10
SCALE, FEET

Attention:
0 1"
If this scale bar does not measure 1" then drawing is not original scale.

STATE OF MAINE
DANIEL J. BANNON
No. 13033
LICENSED PROFESSIONAL ENGINEER
4/16/2025

Designed:	DJB
Drawn:	JAM
Checked:	BJB
Approved:	BMM
P.E. No:	13033
GEI Project	2203703

GEI Consultants
GEI CONSULTANTS, INC.
5 MILK STREET
PORTLAND, ME 04101
(207)797-8901

UNE
UNIVERSITY OF NEW ENGLAND
11 HILLS BEACH RD.
BIDDEFORD, MAINE

UNIVERSITY OF NEW ENGLAND MARINE SCIENCE CENTER PIER

11 HILLS BEACH ROAD
BIDDEFORD, YORK COUNTY, MAINE

NO	DATE	ISSUE/REVISION	APP
7	4/16/2025	BIDDEFORD PERMIT APP.	DJB
6	9/17/2024	REVISED PERMIT SET	DJB
5	6/27/2024	REVISED PERMIT SET	DJB
4	9/14/2023	DEP PERMIT SET	DJB
3	6/28/2023	75% DESIGN SUBMISSION	DJB
2	2/15/2023	30% DESIGN SUBMISSION	DJB
1	12/9/2022	15% DESIGN SUB REV	DJB
0	11/11/2022	15% DESIGN SUBMISSION	DJB

SHEET NAME
ROAD ACCESS SECTIONS STA 4+00 TO 5+75

SHEET NO.
C-010

BANNON, DAN \\gisconsultants.com\data\Data_Storage\Working\UNIVERSITY OF NEW ENGLAND\2203703 UNE Marine Science Center Pier\00_CAD\Design\Sheets\2203703-C-009 C-010.dwg - 4/16/2025

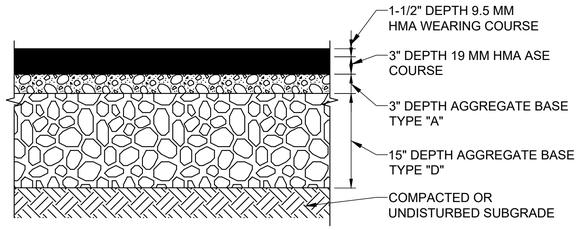

NOTES:
1. PAVEMENT DESIGN SHALL HAVE A MAINEDOT APPROVED JOB MIX FORMULA (JMF) WITHIN THE LATEST CALENDAR YEAR UNLESS OTHERWISE APPROVED BY OWNER.

1 HMA TRAVELWAY/SHOULDER TYPICAL SECTION

NO SCALE

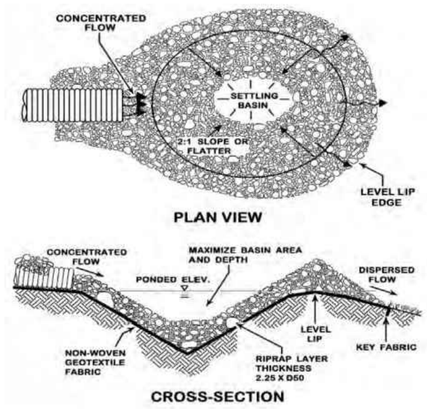

PLUNGE POOL SIZING (minimum)				
SIZE	RIPRAP SIZING (D_{50})	WIDTH At the narrow end of pipe	LENGTH For slow flows (no pressure head)	LENGTH For high flows (with pressure head)
12"	5"	3-4'	4-6'	8-10'
18"	8"	4-6'	6-8'	12-18'
24"	10"	6-8'	8-10'	18-22'
30"	12"	8-10'	12-14'	22-28'
36"	14"	10-12'	14-16'	28-32'

The diameter of the largest stone size in the mix should be about 1.5 times the D_{50} and the smallest one about one half the size. The thickness of riprap should never be less than 2 times the rock D_{50}.

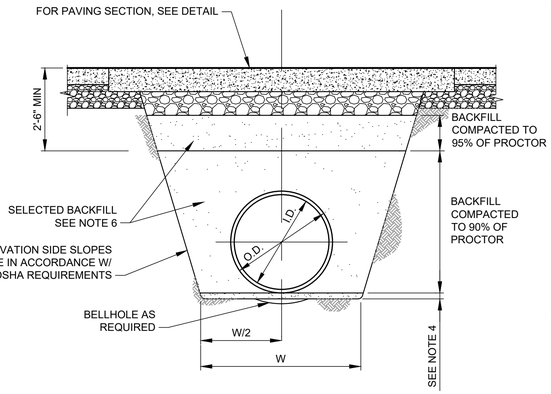

NOTES:
1. TRENCH BOTTOM OR BEDDING FOR ALL PIPE SHALL BE GRADED TO PROVIDE UNIFORM SUPPORT FOR THE ENTIRE LENGTH OF THE PIPE EXCEPT AT BELLHOLES.
2. BELLHOLES FOR PIPES SHALL HAVE A CLEARANCE OF 3" BETWEEN THE BOTTOM OF THE BELLHOLE AND THE EXTERIOR OF THE PIPE BARREL, BUT IN NO CASE SHALL BELLHOLES BE SMALLER THAN REQUIRED TO FACILITATE PLACING OF THE PIPE OR PROPER JOINING OF THE PIPE.
3. COMPACTION BACKFILL SHALL BE COMPACTED TO A DEGREE AT LEAST EQUIVALENT TO THE EXISTING DEGREE OF COMPACTING OF ADJACENT IN-PLACE EARTH MATERIALS AGAINST WHICH SUCH COMPACTED BACKFILL IS TO BE PLACED, OR TO A MIN OF 95% OF THE LABORATORY STANDARD MAX ASTM D698 DENSITY, WHICHEVER IS GREATER.
4. MIN 3" DEEP LAYER OF SCARIFIED MATERIAL WHEN IN HARD MATERIAL. IN UNSUITABLE MATERIAL, OVER EXCAVATE AS DIRECTED BY ENGINEER (6" MIN) AND REPLACE WITH COMPACTED BACKFILL.
5. W = PIPE O.D. + 24" MIN
6. ALL SELECTED BACKFILL IS TO BE IN CONFORMANCE WITH STATE STANDARD SPECIFICATION.

3 TRENCH

NO SCALE

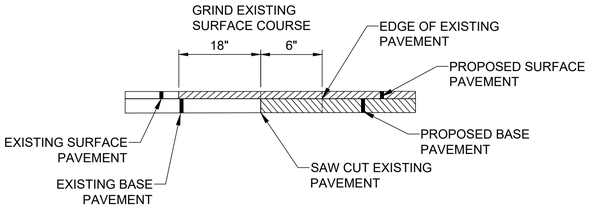

4 HMA PAVEMENT BUTT JOINT

NO SCALE

NOTES:
1. IF THE PIPE DISCHARGES ONTO A FLAT AREA, THE APRON SHOULD HAVE A WIDTH THAT IS THREE TIMES THE OUTLET PIPE'S DIAMETER. IF THE PIPE FLOWS HAVE THE POTENTIAL OF CAUSING A GULLY, A LEVEL SPREADER SHOULD BE PROVIDED.
2. THE CHANNEL SIDE SLOPES SHOULD BE NO STEEPER THAN 2:1. RIPRAP ON THE SIDES OF THE PLUNGE POOL SHOULD EXTEND TO THE TOP OF THE CHANNEL.
3. THE PLUNGE POOL SIZING AND THE MEDIAN SIZED RIPRAP CAN BE DETERMINED FROM THE FOLLOWING TABLE. THE THICKNESS OF RIPRAP SHOULD NOT BE LESS THAN 2 TIMES THE ROCK D50.
4. A GEOTEXTILE OR APPROPRIATE GRAVEL FILTER SHOULD BE USED TO PROTECT AGAINST PIPING OF SOIL FINES FROM BENEATH THE ROCK.
5. IN A CHANNEL THAT CAN BE REVEGETATED, SEED AND MULCH SHOULD BE APPLIED WITHIN 7 DAYS FROM FINAL CONSTRUCTION..

2 PLUNGE POOL

NO SCALE

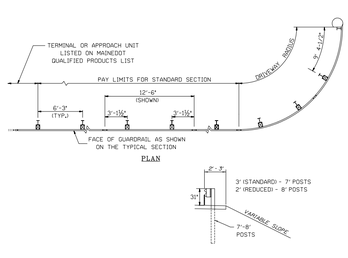

GUARDRAIL
606(03)

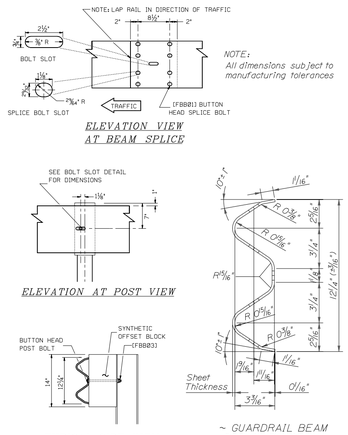

GUARDRAIL
606(04)

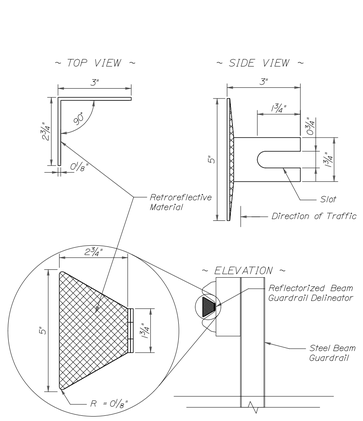

REFLECTORIZED BEAM GUARDRAIL DELINEATOR DETAILS
606(07)

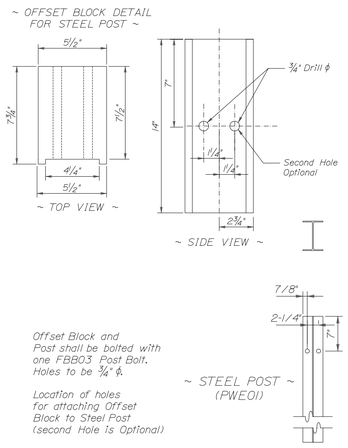

GUARDRAIL
606(06)

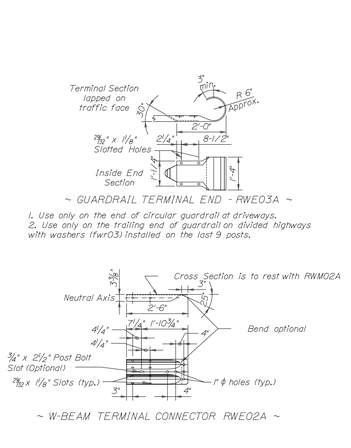

GUARDRAIL
606(05)

5 GUARD RAIL DETAILS

NO SCALE

FOR PERMIT

Attention:
0 1"
If this scale bar does not measure 1" then drawing is not original scale.

STATE OF MAINE
DANIEL J. BANNON
No. 13033
LICENSED PROFESSIONAL ENGINEER
4/16/2025

Designed:	DJB
Drawn:	JAM
Checked:	BJB
Approved:	BMM
P.E. No:	13033
GEI Project	2203703

GEI Consultants
GEI CONSULTANTS, INC.
5 MILK STREET
PORTLAND, ME 04101
(207)797-8901

UNE
UNIVERSITY OF NEW ENGLAND
11 HILLS BEACH RD.
BIDDEFORD, MAINE

UNIVERSITY OF NEW ENGLAND MARINE SCIENCE CENTER PIER
11 HILLS BEACH ROAD
BIDDEFORD, YORK COUNTY, MAINE

NO	DATE	ISSUE/REVISION	
7	4/16/2025	BIDDEFORD PERMIT APP.	DJB
6	9/17/2024	REVISED PERMIT SET	DJB
5	6/27/2024	REVISED PERMIT SET	DJB
4	9/14/2023	DEP PERMIT SET	DJB
3	6/28/2023	75% DESIGN SUBMISSION	DJB
2	2/15/2023	30% DESIGN SUBMISSION	DJB
1	12/9/2022	15% DESIGN SUB REV	DJB
0	11/11/2022	15% DESIGN SUBMISSION	DJB

SHEET NAME: **SITE DETAILS**

SHEET NO.: **C-011**

BANNON, DAN \\geiconsultants.com\data\Data_Storage\Working\UNIVERSITY OF NEW ENGLAND\2203703 UNE Marine Science Center Pier\00_CAD\Design\Sheets\2203703-C-DETAILS.dwg - 4/16/2025

EROSION AND SEDIMENTATION CONTROL NOTES:

INTRODUCTION

THE FOLLOWING PLAN FOR CONTROLLING SEDIMENTATION AND EROSION IN THIS PROJECT IS BASED ON CONSERVATION PRACTICES FOUND IN THE MAINE EROSION & SEDIMENT CONTROL BMPS MANUAL, OCTOBER 2016, AND MAINE EROSION AND SEDIMENT CONTROL PRACTICE FIELD GUIDE FOR CONTRACTORS, REVISED 2014, MAINE DEPARTMENT OF ENVIRONMENTAL PROTECTION. THE CONTRACTOR WHO IMPLEMENTS THIS PLAN SHALL BE FAMILIAR WITH THESE PUBLICATIONS AND ADHERE TO THEM AND THE PRACTICES PRESENTED HEREIN REFERENCE IS MADE TO THE EROSION CONTROL PLANS AND DETAILS (C-005 AND C-013) WITHIN THE PLAN SET, SHOWING THE LOCATIONS AND TYPES OF PROPOSED MEASURES TO BE IMPLEMENTED.

GENERAL EROSION AND SEDIMENTATION CONTROL NOTES:

1. EROSION AND SEDIMENTATION CONTROL MEASURES ARE PROPOSED TO CONTROL ACCELERATED EROSION AND SEDIMENTATION AND REDUCE ADVERSE IMPACTS FROM RUNOFF AND EROSION AT THE WORK SITE.
2. APPLICATION OF TEMPORARY AND PERMANENT EROSION CONTROL MEASURES SHALL BE IN ACCORDANCE WITH THE LATEST EDITION OF THE MAINE EROSION AND SEDIMENT CONTROL BMP'S PUBLISHED BY MAINE DEP AND AVAILABLE AT: HTTPS://WWW.MAINE.GOV/DEP/LAND/EROSION/ESCBMPS/
3. THE WORK SHALL BE PERFORMED BY A CONTRACTOR THAT IS CERTIFIED BY MAINE DEP IN EROSION AND SEDIMENT CONTROL MEASURES. A CERTIFIED INDIVIDUAL SHALL BE ONSITE DURING ALL CONSTRUCTION ACTIVITY.
4. EROSION AND SEDIMENTATION DUE TO RUNOFF, TIDAL EXPOSURE, AND WAVE ACTION SHALL BE CONTROLLED BY STAGING CONSTRUCTION ACTIVITY TO MINIMIZE AREA AND TIME OF DISTURBANCE, APPLICATION OF SILT FENCE, BARRIERS, AND OTHER EROSION CONTROL MEASURES, AND PRESERVING NATURAL VEGETATION WHENEVER POSSIBLE.
5. THE CONTRACTOR'S SEQUENCE OF OPERATIONS AND SCHEDULE FOR WORK ACTIVITIES SHALL ACT TO MINIMIZE EXPOSURE TO EROSION.
6. THE CONTRACTOR SHALL TAKE CARE TO LIMIT THE AREA OF SOIL DISTURBANCE TO THE MINIMUM NECESSARY TO COMPLETE THE WORK.
7. EROSION CONTROL MEASURES, SEEDING, AND VEGETATION SHALL BE INSPECTED WEEKLY AND AFTER RAINSTORMS, RUNOFF EVENTS, AND STORM EVENTS UNTIL FINAL ACCEPTANCE. REPAIRS SHALL BE MADE WHEN NO LONGER SERVICEABLE DUE TO DAMAGE OR ACCUMULATION OF SEDIMENT.
8. AT THE COMPLETION OF CONSTRUCTION, ALL DISTURBED AREAS SHALL BE RESTORED TO THEIR ORIGINAL CONDITION AND CONTOUR, UNLESS OTHERWISE INDICATED ON THE PLANS.

GENERAL EROSION AND SEDIMENTATION CONTROL PRACTICES

THE FOLLOWING IS A LIST OF GENERAL EROSION CONTROL PRACTICES THAT WILL BE USED TO PREVENT EROSION AND SEDIMENTATION BEFORE, DURING AND AFTER THE CONSTRUCTION OF THIS PROJECT. IN ADDITION, SPECIAL CARE SHALL BE USED AT ALL TIMES TO:

LIMIT DISTURBANCE AND, HENCE, EROSION

1. CORRECT ANY EROSION PROBLEMS IMMEDIATELY.
2. REGULARLY MONITOR THE IMPLEMENTED PRACTICES, ESPECIALLY AFTER EVERY RAINFALL.
3. REVEGETATE DISTURBED AREAS AS SOON AS POSSIBLE AFTER CONSTRUCTION.
4. CONFORM TO ALL REQUIREMENTS/STANDARDS OF THE SITE'S MAINE DEP EROSION & SEDIMENT CONTROL BMP MANUAL.

SILT FENCE AND/OR EROSION CONTROL MIX SEDIMENT BARRIERS

SILT FENCE AND/OR EROSION CONTROL MIX SEDIMENT BARRIERS WILL BE INSTALLED ALONG THE DOWN GRADIENT SIDE OF THE PROPOSED GROUND DISTURBANCE AREAS PRIOR TO ANY CONSTRUCTION ACTIVITIES WHERE SLOPES EXCEED 8% OR THERE IS FLOWING WATER BOTH SILT FENCE AND EROSION CONTROL MATTING BERMS SHALL BE USED.

CATCH BASIN PROTECTION

CATCH BASIN PROTECTION WILL BE INSTALLED AT THE FIRST DOWNGRADIENT CATCH BASIN IN STREET ADJACENT TO ANY CONSTRUCTION ACTIVITIES AND IN ALL ONSITE CATCH BASINS UNTIL SITE HAS BEEN COMPLETELY STABILIZED.

CONSTRUCTION PHASE

THE FOLLOWING GENERAL PRACTICES WILL BE IMPLEMENTED TO PREVENT EROSION DURING CONSTRUCTION ON THIS PROJECT:

1. EROSION AND SEDIMENTATION CONTROL BMPS SHALL BE INTALLED PRIOR TO THE COMMENCEMENT OF EARTHWORK ACTIVITIES.
2. ONLY THOSE AREAS UNDER ACTIVE CONSTRUCTION WILL BE CLEARED AND LEFT IN AN UNTREATED OR UNVEGETATED CONDITION. AN AREA NO LARGER THAN WHAT CAN BE MULCHED IN ONE DAY MAY BE OPEN AT ONCE. ONCE CONSTRUCTION OF AN AREA IS COMPLETE, FINAL GRADING, LOAMING AND SEEDING SHALL OCCUR IMMEDIATELY (REFER TO "POST CONSTRUCTION REVEGETATION" SECTION). IF DURING FINAL GRADING, LOAMING AND SEEDING CAN NOT OCCUR IMMEDIATELY, IT SHALL BE DONE PRIOR TO ANY STORM EVENT AND WITHIN 15 DAYS OF COMPLETING CONSTRUCTION IN THE AREA. IF FINAL GRADING, LOAMING AND SEEDING CANNOT OCCUR WITHIN 7 DAYS, OR IF THE AREA IS NOT UNDER ACTIVE CONSTRUCTION FOR A PERIOD LONGER THAN 7 DAYS, SEE ITEM NO. 4 BELOW.
3. PRIOR TO THE START OF CONSTRUCTION IN A SPECIFIC AREA, SILT FENCING SHALL BE INSTALLED ON DOWNGRADIENT PORTIONS OF THE SITE AS LOCATED ON THE PLANS TO PROTECT AGAINST ANY CONSTRUCTION RELATED EROSION.
4. TOPSOIL WILL BE STOCKPILED WHEN NECESSARY IN AREAS WHICH HAVE MINIMUM POTENTIAL FOR EROSION AND WILL BE KEPT AS FAR AS POSSIBLE FROM EXISTING DRAINAGE AREAS AND WETLANDS. ALL STOCKPILES EXPECTED TO REMAIN LONGER THAN 7 DAYS SHALL BE:
   A. TREATED WITH ANCHORED MULCH (WITHIN 5 DAYS OF THE LAST DEPOSIT OF STOCKPILED SOIL).
   B. SEEDED WITH CONSERVATION MIX AND MULCHED IMMEDIATELY.
   C. STOCKPILES SHALL BE EITHER PLACED UPHILL OF AN EXISTING SEDIMENT BARRIER ON THE SITE OR ENCIRCLED BY A HAY BALE OR SILT FENCE BARRIER THE FIRST DAY THAT STOCKPILING COMMENCES.
5. ALL DISTURBED AREAS EXPECTED TO REMAIN LONGER THAN 7 DAYS SHALL BE:
   A. TREATED WITH STRAW AT A RATE OF 70-90 LBS. PER 1000 SQUARE FEET FROM 4/16 TO 10/1, OR AT A RATE OF 150-200 LBS. PER 1000 SQUARE FEET FROM 10/1 TO 4/15.
   B. SEEDED WITH CONSERVATION MIX OF PERENNIAL RYE GRASS (1.0 LBS/1000 SQ.FT.) AND MULCHED IMMEDIATELY. FROM 10/1 TO 4/15, FOLLOW THE SEEDING RATES AS OUTLINED BELOW IN SUB-SECTION 4.D. OF THE "POST CONSTRUCTION REVEGETATION" SECTION.
   C. MONITORED EVERY TWO WEEKS UNTIL SEEDING CAN OCCUR AND REMULCHED AS NEEDED TO PROTECT SLOPES.
6. ALL GRADING WILL BE HELD TO A MAXIMUM 3:1 SLOPE WHERE PRACTICAL. GREATER SLOPES MAY BE USED WHERE THE BANKS ARE PROTECTED WITH SOFT ARMOUR MATTING, EROSION CONTROL MATTING, OR RIPRAP. ALL SLOPES WILL BE STABILIZED WITH PERMANENT SEEDING IMMEDIATELY AFTER FINAL GRADING IS COMPLETE. (IT IS UNDERSTOOD THAT IMMEDIATELY MEANS WITHIN 5 DAYS OF THE COMPLETION OF WORK. SEE POST-CONSTRUCTION REVEGETATION FOR SEEDING SPECIFICATION).
7. APPLICATION RATE MUST BE 2 BALES (70-90 LBS.) PER 1,000 SQUARE FEET OR 1.5 TO 2 TONS (90-100 BALES) PER ACRE TO COVER 75 TO 90% OF THE GROUND SURFACE. DRIVE OVER WITH TRACKED CONSTRUCTION EQUIPMENT ON GRADES OF 5% AND LESS.
8. CONSTRUCTION TRAFFIC WILL BE DIRECTED OVER THE EXISTING SITE ENTRANCE. THE ROAD SHALL BE SWEPT AND VACUUMED DAILY SHOULD SEDIMENT BE TRACKED ONTO IT.
9. ALL AREAS DRAINING TO A STORMWATER FILTER OR BMP SHALL BE STABILIZED PRIOR TO CONSTRUCTION OF FILTER MEDIA TO PREVENT SEDIMENT FROM CLOGGING MEDIA.

DEWATERING

1. ALL DEWATERING DISCHARGE LOCATIONS SHALL BE LOCATED ON RELATIVELY FLAT GROUND AT LEAST 75' FROM STREAMS AND 25' FROM WETLANDS. THE CONTRACTOR SHALL UTILIZE DIRTBAGS, EROSION CONTROL MIX BERMS, OR SIMILAR METHODS FOR FILTRATION OF DEWATERING AND SHALL CONFORM TO THE MAINE EROSION AND SEDIMENT CONTROL BMPS G-1, G-2, AND G-3.

POST CONSTRUCTION REVEGETATION

THE FOLLOWING GENERAL PRACTICES WILL BE IMPLEMENTED TO PREVENT EROSION AS SOON AS AN AREA IS READY TO UNDERGO FINAL GRADING:

1. A MINIMUM OF 6" OF LOAM WILL BE SPREAD OVER DISTURBED AREAS AND GRADED TO A UNIFORM DEPTH AND NATURAL APPEARANCE.
2. LAWN AREAS: "PARK MIX" GRASS SEED BY ALLEN, STERLING & LOTHROP (FALMOUTH, MAINE), OR APPROVED EQUAL.
3. MULCH SHALL BE HAY OR STRAW MULCHES THAT ARE DRY AND FREE FROM UNDESIRABLE SEEDS AND COURSE MATERIALS.
   A. APPLICATION RATE MUST BE 2 BALES (70-90 LBS.) PER 1,000 SQUARE FEET OR 1.5 TO 2 TONS (90-100 BALES) PER ACRE TO COVER 75 TO 90% OF THE GROUND SURFACE.
   B. DRIVE OVER WITH TRACKED CONSTRUCTION EQUIPMENT ON GRADES OF 5% AND LESS.
   C. BLANKET WITH TACKED PHOTODEGRADABLE/BIODEGRADABLE NETTING ON GRADES GREATER THAN 5%.
4. HYDRO-MULCH SHALL CONSIST OF A MIXTURE OF ASPHALT, WOOD FIBRE OR PAPER FIBRE AND WATER, WHICH IS SPRAYED OVER A SEEDED AREA. HYDRO-MULCH SHALL NOT BE USED BETWEEN 10/1 AND 4/15.
5. CONSTRUCTION SHALL BE PLANNED TO ELIMINATE THE NEED FOR SEEDING BETWEEN OCTOBER 1ST AND APRIL 15TH. SHOULD SEEDING BE NECESSARY BETWEEN THESE DATES, THE FOLLOWING PROCEDURE SHALL BE FOLLOWED:
   A. ONLY UNFROZEN LOAM SHALL BE USED.
   B. LOAMING, SEEDING AND MULCHING WILL NOT BE DONE OVER SNOW OR ICE COVER. IF SNOW EXISTS, IT MUST BE REMOVED PRIOR TO PLACEMENT OF SEED.
   C. WHERE PERMANENT SEEDING IS NECESSARY, ANNUAL WINTER RYE (1.2 LBS/1000 S.F.) SHALL BE SOWN INSTEAD OF THE PREVIOUSLY NOTED SEEDING RATE.
   D. WHERE TEMPORARY SEEDING IS REQUIRED, ANNUAL WINTER RYE (2.5 LBS/1000 S.F.) SHALL BE SOWN INSTEAD OF THE PREVIOUSLY NOTED SEEDING RATE.
   E. FERTILIZING, SEEDING AND MULCHING SHALL BE DONE ON LOAM THE DAY THE LOAM IS SPREAD.
   F. HAY MULCH SHALL BE SECURED WITH PHOTODEGRADABLE/BIODEGRADABLE NETTING. TRACKING BY MACHINERY ALONE WILL NOT SUFFICE. WINTER MULCHING RATES, SHALL BE DOUBLE AS SPECIFIED ABOVE IN SUBSECTION 3.A OF THE "POST CONSTRUCTION REVEGETATION" SECTION, SHOULD BE APPLIED DURING THIS PERIOD.
6. FOLLOWING FINAL SEEDING, THE SITE WILL BE INSPECTED EVERY 30 DAYS UNTIL 90% COVER HAS BEEN ESTABLISHED. RESEEDING WILL BE CARRIED OUT BY THE CONTRACTOR WITHIN 10 DAYS OF NOTIFICATION BY THE DESIGN PROFESSIONAL THAT THE EXISTING CATCH IS INADEQUATE.

MONITORING SCHEDULE

THE CONTRACTOR SHALL BE RESPONSIBLE FOR INSTALLING, MONITORING, MAINTAINING, REPAIRING, REPLACING AND REMOVING ALL OF THE EROSION AND SEDIMENTATION CONTROLS OR APPOINTING A QUALIFIED SUBCONTRACTOR TO DO SO. MAINTENANCE MEASURES WILL BE APPLIED AS NEEDED DURING THE ENTIRE CONSTRUCTION CYCLE. IMMEDIATELY FOLLOWING ANY SIGNIFICANT RAINFALL, AND AT LEAST ONCE A WEEK, A VISUAL INSPECTION WILL BE MADE OF ALL EROSION AND SEDIMENTATION CONTROLS AS FOLLOWS:

1. SILT FENCE SHALL BE INSPECTED AND REPAIRED. SEDIMENT TRAPPED BEHIND THESE BARRIERS SHALL BE EXCAVATED WHEN IT REACHES A DEPTH OF 6" AND REDISTRIBUTED TO AREAS UNDERGOING FINAL GRADING.
2. CONSTRUCTION ENTRANCE SHALL BE VISUALLY INSPECTED AND REPAIRED AS NEEDED. ANY AREAS SUBJECT TO RUTTING SHALL BE STABILIZED IMMEDIATELY. IF THE VOIDS OF THE CONSTRUCTION ENTRANCE BECOME FILLED WITH MUD, MORE CRUSHED STONE SHALL BE ADDED AS NEEDED. THE PUBLIC ROADWAY SHALL BE SWEPT AND VACUUMED SHOULD MUD BE DEPOSITED/TRACKED ONTO THEM.

STANDARDS FOR STABILIZING SITES FOR THE WINTER

THE FOLLOWING STANDARDS AND METHODOLOGIES SHALL BE USED FOR STABILIZING THE SITE DURING THE WINTER CONSTRUCTION PERIOD:

1. STANDARD FOR THE TIMELY STABILIZATION OF DISTURBED SLOPES (ANY AREA HAVING A GRADE GREATER THAN 25%) - THE CONTRACTOR WILL SEED AND MULCH ALL SLOPES TO BE VEGETATED BY SEPTEMBER 15TH. IF THE CONTRACTOR FAILS TO STABILIZE ANY SLOPE TO BE VEGETATED BY SEPTEMBER 15TH, THEN THE CONTRACTOR WILL TAKE ONE OF THE FOLLOWING ACTIONS TO STABILIZE THE SLOPE FOR LATE FALL AND WINTER.
   A. STABILIZE THE SOIL WITH TEMPORARY VEGETATION AND EROSION CONTROL MATS: BY OCTOBER 1ST THE CONTRACTOR WILL SEED THE DISTURBED SLOPE WITH WINTER RYE AT A RATE OF 3 POUNDS PER 1000 SQUARE FEET AND THEN INSTALL EROSION CONTROL MATS OR ANCHORED HAY MULCH OVER THE SEEDING AT TWICE THE RATE AS SPECIFIED ABOVE IN SUBSECTION 3.A OF THE "POST CONSTRUCTION REVEGETATION" SECTION. THE CONTRACTOR WILL MONITOR GROWTH OF THE RYE OVER THE NEXT 30 DAYS.
   B. STABILIZE THE SLOPE WITH WOOD-WASTE COMPOST: THE CONTRACTOR WILL PLACE A SIX-INCH LAYER OF WOOD-WASTE COMPOST ON THE SLOPE BY NOVEMBER 15TH. THE CONTRACTOR WILL NOT USE WOOD-WASTE COMPOST TO STABILIZE SLOPES HAVING GRADES GREATER THAN 50% (2H:IV) OR HAVING GROUNDWATER SEEPS ON THE SLOPE FACE.
   C. STABILIZE THE SLOPE WITH STONE RIPRAP: THE CONTRACTOR WILL PLACE A LAYER OF STONE RIPRAP ON THE SLOPE BY NOVEMBER 15TH. THE DEVELOPMENT'S OWNER WILL HIRE A REGISTERED PROFESSIONAL ENGINEER TO DETERMINE THE STONE SIZE NEEDED FOR STABILITY ON THE SLOPE AND TO DESIGN A FILTER LAYER FOR UNDERNEATH THE RIPRAP.

STANDARD FOR THE TIMELY STABILIZATION OF DISTURBED SOILS - BY SEPTEMBER 15TH THE CONTRACTOR WILL SEED AND MULCH ALL DISTURBED SOILS ON THE SITE. IF THE CONTRACTOR FAILS TO STABILIZE THESE SOILS BY THIS DATE, THEN THE CONTRACTOR WILL TAKE ON OF THE FOLLOWING ACTIONS TO STABILIZE THE SOIL FOR LATE FALL AND WINTER.

   A. STABILIZE THE SOIL WITH TEMPORARY VEGETATION: BY OCTOBER 1ST THE CONTRACTOR WILL SEED THE DISTURBED SOIL WITH WINTER RYE AT A SEEDING RATE OF 3 POUNDS PER 1000 SQUARE FEET, LIGHTLY MULCH THE SEEDED SOIL WITH HAY OR STRAW AT 75 POUNDS PER 1000 SQUARE FEET, AND ANCHOR THE MULCH WITH PLASTIC NETTING. THE CONTRACTOR WILL MONITOR GROWTH OF THE RYE OVER THE NEXT 30 DAYS. IF THE RYE FAILS TO GROW AT LEAST THREE INCHES OR FAILS TO COVER AT LEAST 75% OF THE DISTURBED SOIL BEFORE NOVEMBER, 1, THEN THE CONTRACTOR WILL MULCH THE AREA FOR OVER-WINTER PROTECTION AS DESCRIBED IN ITEM III OF THIS STANDARD.
   B. STABILIZE THE SOIL WITH SOD: THE CONTRACTOR WILL STABILIZE THE DISTURBED SOIL WITH PROPERLY INSTALLED SOD BY OCTOBER 1ST. PROPER INSTALLATION INCLUDES THE CONTRACTOR PINNING THE SOD ONTO THE SOIL WITH WIRE PINS, ROLLING THE SOD TO GUARANTEE CONTACT BETWEEN THE SOD AND UNDERLYING SOIL, AND WATERING THE SOD TO PROMOTE ROOT GROWTH INTO THE DISTURBED SOIL.
   C. STABILIZE THE SOIL WITH MULCH: BY NOVEMBER 15TH THE CONTRACTOR WILL MULCH THE DISTURBED SOIL BY SPREADING HAY OR STRAW AT A RATE OF AT LEAST 150 POUNDS PER 1000 SQUARE FEET ON THE AREA SO THAT NO SOIL IS VISIBLE THROUGH THE MULCH. IMMEDIATELY AFTER APPLYING THE MULCH, THE CONTRACTOR WILL ANCHOR THE MULCH WITH NETTING OR OTHER METHOD TO PREVENT WIND FROM MOVING THE MULCH OFF THE DISTURBED SOIL.

EROSION CONTROL REMOVAL

AN AREA IS CONSIDERED STABLE IF IT IS PAVED OR IF 90% GROWTH OF PLANTED SEEDS IS ESTABLISHED. ONCE AN AREA IS CONSIDERED STABLE, THE EROSION CONTROL MEASURES CAN BE REMOVED AS FOLLOWS:

1. SILT FENCE: SILT FENCE SHALL BE DISPOSED OF LEGALLY AND PROPERLY OFF-SITE. ALL SEDIMENT TRAPPED BEHIND THESE CONTROLS SHALL BE DISTRIBUTED TO AN AREA UNDERGOING FINAL GRADING OR REMOVED AND RELOCATED OFF-SITE.
2. STABILIZED CONSTRUCTION ENTRANCE: THE STABILIZED CONSTRUCTION ENTRANCE SHALL BE REMOVED ONCE THE COMPACTED ROADWAY BASE IN IN PLACE. STONE AND SEDIMENT FROM THE CONSTRUCTION ENTRANCE SHALL BE REDISTRIBUTED TO AN AREA UNDERGOING GRADING OR REMOVED AND RELOCATED OFFSITE.
3. MISCELLANEOUS: ONCE ALL THE TRAPPED SEDIMENTS HAVE BEEN REMOVED FROM THE TEMPORARY SEDIMENTATION DEVICES THE DISTURBED AREAS MUST BE REGRADED IN AN AESTHETIC MANNER TO CONFORM TO THE SURROUNDING TOPOGRAPHY. ONCE GRADED THESE DISTURBED AREAS MUST BE LOAMED (IF NECESSARY), FERTILIZED, SEEDED AND MULCHED IN ACCORDANCE WITH THE RATES PREVIOUSLY STATED.

THE ABOVE EROSION CONTROLS MUST BE REMOVED WITHIN 30 DAYS OF FINAL STABILIZATION OF THE SITE. CONFORMANCE WITH THIS PLAN AND FOLLOWING THESE PRACTICES WILL RESULT IN A PROJECT THAT COMPLIES WITH THE STATE REGULATIONS AND THE STANDARDS OF THE NATURAL RESOURCES PROTECTION ACT, AND WILL PROTECT WATER QUALITY IN AREAS DOWNSTREAM ROM THE PROJECT.

MAINE CONSTRUCTION GENERAL PERMIT REQUIRED

SUBMISSION OF A MAINE CONSTRUCTION GENERAL PERMIT (MCGP) IS REQUIRED PRIOR TO COMMENCEMENT OF ANY EXCAVATION ACTIVITIES.

INSPECTION AND MAINTENANCE (APPENDIX B)

1. INSPECTION AND MAINTENANCE REQUIREMENTS: INSPECT DISTURBED AND IMPERVIOUS AREAS, EROSION AND STORMWATER CONTROL MEASURES, AREAS USED FOR STORAGE THAT ARE EXPOSED TO PRECIPITATION, AND LOCATIONS WHERE VEHICLES ENTER OR EXIT THE SITE. INSPECT THESE AREAS AT LEAST ONCE A WEEK AS WELL AS BEFORE AND AFTER A SIGNIFICANT STORM EVENT (0.5 INCHES OF RAINFALL IN A 24-HOUR PERIOD) AND PRIOR TO COMPLETION OF PERMANENT STABILIZATION MEASURES. A PERSON WITH KNOWLEDGE OF EROSION AND STORMWATER CONTROL, INCLUDING THE STANDARDS IN THE MCGP AND ANY DEPARTMENTAL COMPANION DOCUMENT TO THE MCGP, MUST CONDUCT THE INSPECTION. THIS PERSON MUST BE IDENTIFIED IN THE INSPECTION LOG. IF BEST MANAGEMENT PRACTICES (BMPS) NEED TO BE MODIFIED OR IF ADDITIONAL BMPS ARE NECESSARY, IMPLEMENTATION MUST BE STARTED BY THE END OF THE NEXT WORKIN DAY AND COMPLETED WITHIN 7 CALENDAR DAYS AND PRIOR TO ANY STORM EVENT (RAINFALL). ALL MEASURES MUST BE MAINTAINED IN EFFECTIVE OPERATING CONDITION UNTIL AREAS AREA PERMANENTLY STABILIZED. DOCUMENTATION OF CORRECTION ACTIONS SHALL BE MAINTAINED WITH THE INSPECTION FORMS.
2. INSPECTION LOG (REPORT): A LOG (REPORT) MUST BE KEPT SUMMARIZING THE SCOPE OF THE INSPECTION, NAME(S) AND QUALIFICATIONS OF THE PERSONNEL MAKING THE INSPECTION, THE DATE(S) OF THE INSPECTION, AND MAJOR OBSERVATIONS RELATING TO OPERATION OF EROSION AND SEDIMENTATION CONTROLS AND POLLUTION PREVENTION MEASURES. MAJOR OBSERVATIONS MUST INCLUDE BMPS THAT NEED MAINTENANCE, BMPS THAT FAILED TO OPERATE AS DESIGNED OR PROVED INADEQUATE FOR A PARTICULAR LOCATION, AND LOCATIONS(S) WHERE ADDITIONAL BMPS ARE NEEDED. FOR EACH BMP REQUIRING MAINTENANCE, BMP NEEDING REPLACEMENT, AND LOCATION NEEDING ADDITIONAL BMPS, NOTE IN THE INSPECTION LOG THE CORRECT ACTION TAKEN AND WHEN IT WAS TAKEN. THE LOG MUST BE MADE ACCESSIBLE TO THE DEPARTMENT STAFF AND A COPY MUST BE PROVIDED UPON REQUEST. THE PERMITTEE SHALL RETAIN A COPY OF THE LOG FOR A PERIOD OF AT LEAST THREE YEARS FROM THE COMPLETION OF THE PERMANENT STABILIZATION.

HOUSEKEEPING (APPENDIX C)

1. SPILL PREVENTION: CONTROLS MUST BE USED TO PREVENT POLLUTANTS FROM CONSTRUCTION AND WASTE MATERIALS STORED ON SITE TO ENTER STORMWATER, WHICH INCLUDES STORAGE PRACTICES TO MINIMIZE EXPOSURE OF THE MATERIALS TO STORMWATER. THE SITE CONTRACTOR OR OPERATOR MUST DEVELOP, AND IMPLEMENT AS NECESSARY, APPROPRIATE SPILL PREVENTION, CONTAINMENT, AND RESPONSE PLANNING MEASURES.

NOTE: ANY SPILL OR RELEASE OF TOXIC OR HAZARDOUS SUBSTANCES MUST BE REPORTED TO THE DEPARTMENT. FOR OIL SPILLS, CALL 1-800-482-0777 WHICH IS AVAILABLE 24 HOURS A DAY. FOR SPILLS OF TOXIC OR HAZARDOUS MATERIAL, CALL 1-800-452-4664 WHICH IS AVAILABLE 24 HOURS A DAY. FOR MORE INFORMATION, VISIT THE DEPARTMENT'S WEBSITE AT: HTTP://WWW.MAINE.GOV/DEP/SPILLS/EMERGSPILLRESP/

2. GROUNDWATER PROTECTION: DURING CONSTRUCTION, LIQUID PETROLEUM PRODUCTS AND OTHER HAZARDOUS MATERIALS WITH THE POTENTIAL TO CONTAMINATE GROUNDWATER MAY NOT BE STORED OR HANDLED IN AREAS OF THE SITE DRAINING TO AN INFILTRATION AREA. AN "INFILTRATION AREA" IS ANY AREA OF THE SITE THAT BY DESIGN OR AS A RESULT OF SOILS, TOPOGRAPHY AND OTHER RELEVANT FACTORS ACCUMULATES RUNOFF THAT INFILTRATES INTO THE SOIL. DIKES, BERMS, SUMPS, AND OTHER FORMS OF SECONDARY CONTAINMENT THAT PREVENT DISCHARGE TO GROUNDWATER MAY BE USED TO ISOLATE PORTIONS OF THE SITE FOR THE PURPOSES OF STORAGE AND HANDLING OF THESE MATERIALS. ANY PROJECT PROPOSING INFILTRATION OF STORMWATER MUST PROVIDE ADEQUATE PRE-TREATMENT OF STORMWATER PRIOR TO DISCHARGE OF STORMWATER TO THE INFILTRATION AREA, OR PROVIDE FOR TREATMENT WITHIN THE INFILTRATION AREA, IN ORDER TO PREVENT THE ACCUMULATION OF FINES, REDUCTION IN INFILTRATION RATE, AND CONSEQUENT FLOODING AND DESTABILIZATION.

NOTE: LACK OF APPROPRIATE POLLUTANT REMOVAL BEST MANAGEMENT PRACTICES (BMPS) MAY RESULT IN VIOLATIONS OF THE GROUNDWATER QUALITY STANDARD ESTABLISHED BY 38 M.R.S.A. §465-C(1).

3. FUGITIVE SEDIMENT AND DUST: ACTIONS MUST BE TAKEN TO ENSURE THAT ACTIVITIES DO NOT RESULT IN NOTICEABLE EROSION OF SOILS OR FUGITIVE DUST EMISSIONS DURING OR AFTER CONSTRUCTION. OIL MAY NOT BE USED FOR DUST CONTROL, BUT OTHER WATER ADDITIVES MAY BE CONSIDERED AS NEEDED. A STABILIZED CONSTRUCTION ENTRANCE (SCE) SHOULD BE INCLUDED TO MINIMIZE TRACKING OF MUD AND SEDIMENT. IF OFF-SITE TRACKING OCCURS, PUBLIC ROADS SHOULD BE SWEPT IMMEDIATELY AND NO LESS THAN ONCE A WEEK AND PRIOR TO SIGNIFICANT STORM EVENTS. OPERATIONS DURING DRY MONTHS, THAT EXPERIENCE FUGITIVE DUST PROBLEMS, SHOULD WET DOWN UNPAVED ACCESS ROADS ONCE A WEEK OR MORE FREQUENTLY AS NEEDED WITH A WATER ADDITIVE TO SUPPRESS FUGITIVE SEDIMENT AND DUST.

NOTE: DEWATERING A STREAM WITHOUT A PERMIT FROM THE DEPARTMENT MAY VIOLATE STATE WATER QUALITY STANDARDS AND THE NATURAL RESOURCES PROTECTION ACT.

4. DEBRIS AND OTHER MATERIALS: MINIMIZE THE EXPOSURE OF CONSTRUCTION DEBRIS, BUILDING AND LANDSCAPING MATERIALS, TRASH, FERTILIZERS, PESTICIDES, HERBICIDES, DETERGENTS, SANITARY WASTE AND OTHER MATERIALS TO PRECIPITATION AND STORMWATER RUNOFF. THESE MATERIALS MUST BE PREVENTED FROM BECOMING A POLLUTANT SOURCE.

NOTE: TO PREVENT THESE MATERIALS FROM BECOMING A SOURCE OF POLLUTANTS, CONSTRUCTION AND POST-CONSTRUCTION ACTIVITIES RELATED TO A PROJECT MAY BE REQUIRED TO COMPLY WITH APPLICABLE PROVISION OF RULES RELATED TO SOLID, UNIVERSAL, AND HAZARDOUS WASTE, INCLUDING, BUT NOT LIMITED TO, THE MAINE SOLID WASTE AND HAZARDOUS WASTE MANAGEMENT RULES; MAINE HAZARDOUS WASTE MANAGEMENT RULES; MAINE OIL CONVEYANCE AND STORAGE RULES; AND MAINE PESTICIDE REQUIREMENTS.

5. EXCAVATION DEWATERING: EXCAVATION DEWATERING IS THE REMOVAL OF WATER FROM TRENCHES, FOUNDATIONS, COFFER DAMS, PONDS, AND OTHER AREAS WITHIN THE CONSTRUCTION AREA THAT RETAIN WATER AFTER EXCAVATION. IN MOST CASES THE COLLECTED WATER IS HEAVILY SILTED AND HINDERS CORRECT AND SAFE CONSTRUCTION PRACTICES. THE COLLECTED WATER REMOVED FROM THE PONDED AREA, EITHER THROUGH GRAVITY OR PUMPING, MUST BE SPREAD THROUGH NATURAL WOODED BUFFERS OR REMOVED TO AREAS THAT ARE SPECIFICALLY DESIGNED TO COLLECT THE MAXIMUM AMOUNT OF SEDIMENT POSSIBLE, LIKE A COFFERDAM SEDIMENTATION BASIN. AVOID ALLOWING THE WATER TO FLOW OVER DISTURBED AREAS OF THE SITE. EQUIVALENT MEASURES MAY BE TAKEN IF APPROVED BY THE DEPARTMENT.

NOTE: DEWATERING CONTROLS ARE DISCUSSED IN THE "MAINE EROSION AND SEDIMENT CONTROL BMPS, MAINE DEPARTMENT OF ENVIRONMENTAL PROTECTION."

6. AUTHORIZED NON-STORMWATER DISCHARGES: IDENTIFY AND PREVENT CONTAMINATION BY NON-STORMWATER DISCHARGES. WHERE ALLOWED NON-STORMWATER DISCHARGES EXIST, THEY MUST BE IDENTIFIED AND STEPS SHOULD BE TAKEN TO ENSURE THE IMPLEMENTATION OF APPROPRIATE POLLUTION PREVENTION MEASURES FOR THE NON-STORMWATER COMPONENT(S) OF THE DISCHARGE. AUTHORIZED NON-STORMWATER DISCHARGES ARE:
   - DISCHARGES FROM FIREFIGHTING ACTIVITY;
   - FIRE HYDRANT FLUSHINGS;
   - VEHICLE WASHWATER IF DETERGENTS ARE NOT USED AND WASHING IS LIMITED TO THE EXTERIOR OF VEHICLES (ENGINE, UNDERCARRIAGE, AND TRANSMISSION WASHING IS PROHIBITED);
   - DUST CONTROL RUNOFF IN ACCORDANCE WITH PERMIT CONDITIONS AND APPENDIX (C)(3);
   - ROUTINE EXTERNAL BUILDING WASHDOWN, NOT INCLUDING SURFACE PAINT REMOVAL, THAT DOES NOT INVOLVE DETERGENTS;
   - PAVEMENT WASHWATER (WHERE SPILLS/LEAKS OF TOXIC OR HAZARDOUS MATERIALS HAVE NOT OCCURRED, UNLESS ALL SPILLED MATERIAL HAD BEEN REMOVED) IF DETERGENTS ARE NOT USED;
   - UNCONTAMINATED AIR CONDITIONING OR COMPRESSOR CONDENSATE;
   - UNCONTAMINATED GROUNDWATER OR SPRING WATER;
   - FOUNDATION OR FOOTER DRAIN-WATER WHERE FLOWS ARE NOT CONTAMINATED;
   - UNCONTAMINATED EXCAVATION DEWATERING (SEE REQUIREMENTS IN APPENDIX C(5));
   - POTABLE WATER SOURCES INCLUDING WATERLINE FLUSHINGS; AND
   - LANDSCAPE IRRIGATION
7. UNAUTHORIZED NON-STORMWATER DISCHARGES: THE DEPARTMENT'S APPROVAL UNDER THIS CHAPTER DOES NOT AUTHORIZE A DISCHARGE THAT IS MIXED WITH A SOURCE OF NON-STORMWATER, OTHER THAN THOSE DISCHARGES IN COMPLIANCE WITH APPENDIX C (6). SPECIFICALLY, THE DEPARTMENT'S APPROVAL DOES NOT AUTHORIZE DISCHARGE OF THE FOLLOWING:
   - WASTEWATER FROM THE WASHOUT OR CLEANOUT OF CONCRETE, STUCCO, PAINT, FORM RELEASE OILS, CURING COMPOUNDS OR OTHER CONSTRUCTION MATERIALS;
   - FUELS, OILS OR OTHER POLLUTANTS USED IN VEHICLE AND EQUIPMENT OPERATION AND MAINTENANCE;
   - SOAPS, SOLVENTS, OR DETERGENTS USED IN VEHICLE AND EQUIPMENT WASHING; AND
   - TOXIC OR HAZARDOUS SUBSTANCES FROM A SPILL OR OTHER RELEASE.

ADDITIONAL REQUIREMENTS: ADDITIONAL REQUIREMENTS MAY BE APPLIED ON A SITE-SPECIFIC BASIS.

CONSTRUCTION OVERSITE

THE APPLICANT WILL RETAIN THE SERVICES OF A PROFESSIONAL ENGINEER TO INSPECT THE CONSTRUCTION AND STABILIZATION FOR ALL STORMWATER MANAGEMENT STRUCTURES. IF NECESSARY, THE INSPECTING ENGINEER WILL INTERPRET THE POND'S CONSTRUCTION PLAN FOR THE CONTRACTOR. ONCE ALL STORMWATER MANAGEMENT STRUCTURES ARE CONSTRUCTED AND STABILIZED, THE INSPECTING ENGINEER WILL NOTIFY THE DEPARTMENT IN

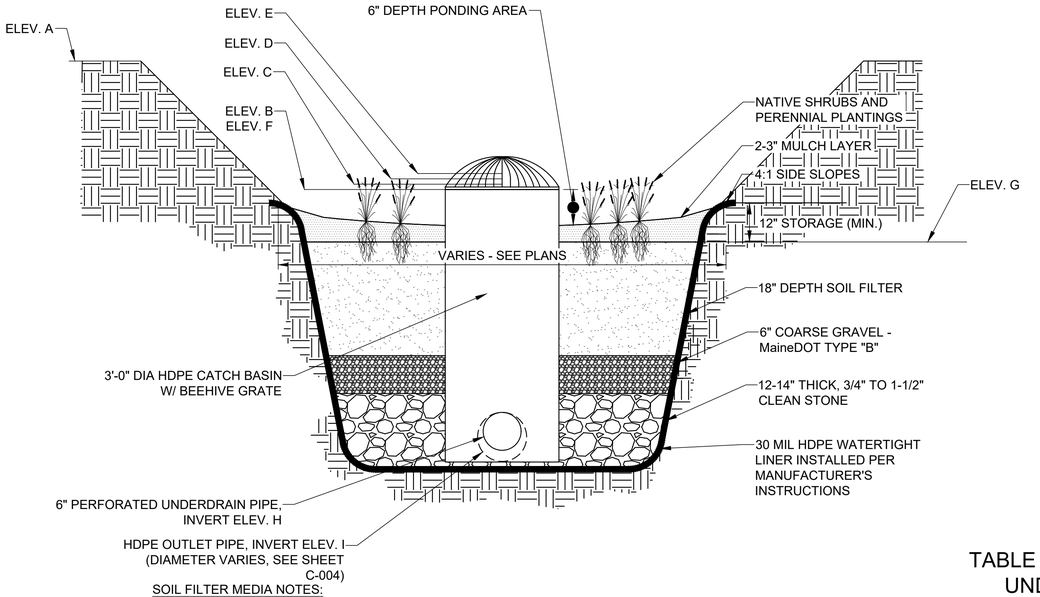

SOIL FILTER MEDIA NOTES:

SOIL FILTER MEDIA SHALL CONFORM TO MAINE DEP SOIL FILTER MEDIA OPTION 1, PER MAINE DEP STORMWATER BMP MANUAL CHAPTER 7.1. AS FOLLOWS:

1.1. SOIL FILTER MEDIA SHALL CONSIST OF A SILTY SAND SOIL OR SOIL MIXTURE COMBINED WITH A MATURE, MODERATELY FINE SHREDDED BARK OR WOOD FIBER MULCH.
1.2. THE RESULTING MIX SHALL CONTAIN NO LESS THAN 10% BY DRY WEIGHT ORGANIC MATERIAL.
1.3. THE RESULTING MIX SHALL CONTAIN 8% TO 12% PASSING THE NO. 200 SIEVE.
1.4. THE RESULTING MIX SHALL CONTAIN A MAXIMUM CLAY CONTENT OF 2%.

UNDERDRAIN OUTLET VALVE CALIBRATION NOTES:

AFTER THE COMPLETION OF INSTALLATION OF THE SOIL FILTER MEDIA, THE CONTRACTOR SHALL PERFORM THE FOLLOWING PROCEDURE TO CALIBRATE THE UNDERDRAIN OUTLET VALVE TO ACHIEVE THE 0.75"/HOUR DESIGN FLOW RATE.

1. BEGIN WITH VALVE HALF-OPEN.
2. CAREFULLY FLOOD THE BASIN UNTIL THERE IS 18" OF WATER STORED ABOVE THE SOIL FILTER MEDIA (UP TO THE HEIGHT OF OUTLET STRUCTURE RIM) WITHOUT CAUSING EROSION OF THE SOIL FILTER MEDIA.
3. RECORD THE TIME IT TAKES FOR THE 18" OF WATER TO DRAIN TO THE TOP OF THE SOIL FILTER MEDIA. THE TARGET DRAINDOWN TIME IS 24 HOURS.
4. IF THE 18" OF WATER DRAINS IN LESS THAN 24 HOURS, CLOSE THE VALVE SLIGHTLY AND REPEAT STEPS 2 & 3 ABOVE.
5. IF THE 18" OF WATER DRAINS IN MORE THAN 24 HOURS, OPEN THE VALVE SLIGHTLY AND REPEAT STEPS 2 & 3 ABOVE.
6. REPEAT THIS PROCESS UNTIL THE 18" OF WATER DRAINS IN 24 HOURS.

GRASSED UNDERDRAINED SOIL FILTER SCHEDULE

GRASSED UNDERDRAINED SOIL FILTER ID	EMBKMT. ELEV. A	WATER QUALITY STORM ELEV. B	2-YR STORM ELEV. C	10-YR STORM ELEV. D	25-YR STORM ELEV. E	TOP OF OUTLET STRUCT ELEV. F	BOTTOM OF STORAGE ELV. G	INTERIOR UNDERDRAIN INVERT (START) H	UNDERDRAIN OUTLET INVERT I	FILTER AREA (SQ. FT.)
SF-A	24.50	23.50	23.62	23.67	23.71	23.50	23.00	19.25	18.75	580
SF-B	18.50	18.00	18.11	18.16	18.19	18.00	17.50	14.25	13.75	890

2 BIORETENTION FILTER CELL

NO SCALE

TABLE 1: MDOT SPECIFICATIONS FOR UNDERDRAINS (MDOT #703.22)

SIEVE SIZE	% BY WEIGHT
UNDERDRAIN TYPE B	
0'-1"	90-100
0'-0 1/2"	75-100
#4	50-100
#20	15-80
#50	0-15
#200	0-5

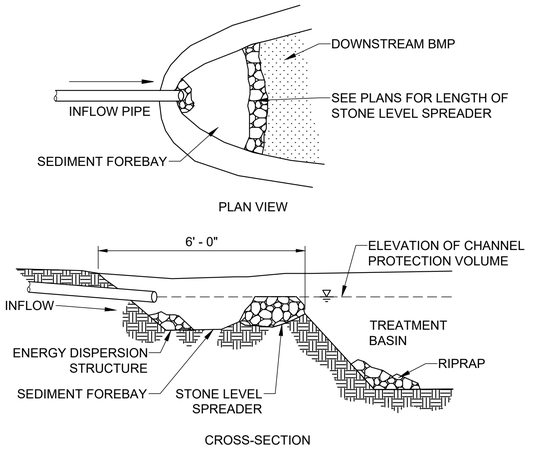

NOTES:
1. STONE SHALL BE AASHTO #3 STONE, UNIFORMLY GRADED, CLEAN.

3 LEVEL SPREADER DESIGN

NO SCALE

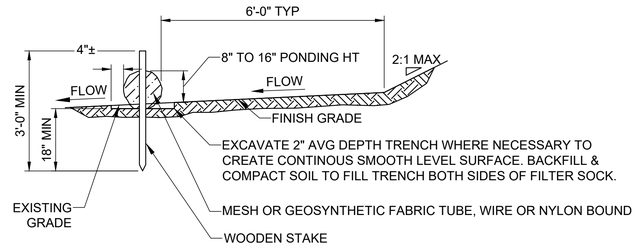

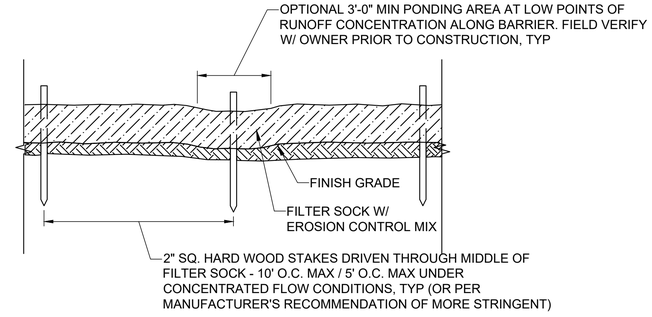

NOTES:
1. FILTER SOCKS SHALL BE INSTALLED IN CONTINUOUS SEGMENT AND IN FULL CONTACT WITH THE GROUND ON A SMOOTH LEVEL SURFACE.
2. FOLLOW MANUFACTURER'S REQUIREMENTS FOR INSTALLATION, MAINTENANCE AND REMOVAL OF FILTER SOCK MATERIALS.
3. AREAS DISTURBED BY EROSION BARRIERS SHALL BE STABILIZED AFTER REMOVAL.

1 SEDIMENT BARRIER - FILTER SOCK

NO SCALE

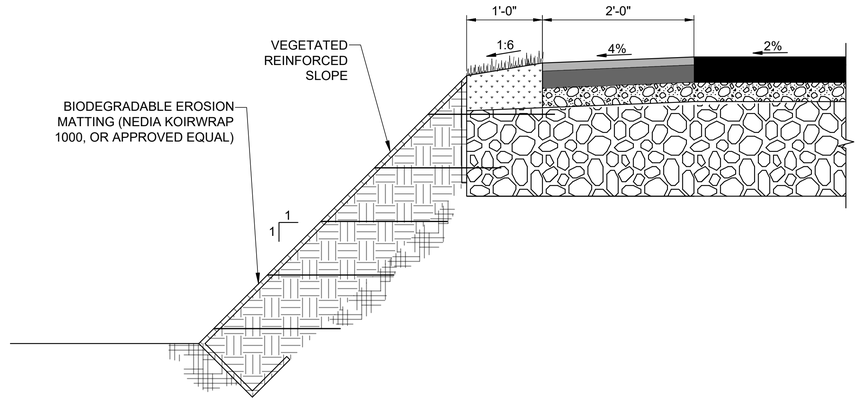

4 1:1 VEGETATED REINFORCED SLOPE

NO SCALE

FOR PERMIT

Attention:
0 1"
If this scale bar does not measure 1" then drawing is not original scale.

STATE OF MAINE DANIEL J. BANNON No. 13033 LICENSED PROFESSIONAL ENGINEER 4/16/2025

Designed:	DJB
Drawn:	JAM
Checked:	BJB
Approved:	BMM
P.E. No:	13033
GEI Project	2203703

GEI Consultants
GEI CONSULTANTS, INC.
5 MILK STREET
PORTLAND, ME 04101
(207)797-8901

UNE
UNIVERSITY OF NEW ENGLAND
11 HILLS BEACH RD.
BIDDEFORD, MAINE

UNIVERSITY OF NEW ENGLAND MARINE SCIENCE CENTER PIER
11 HILLS BEACH ROAD
BIDDEFORD, YORK COUNTY, MAINE

NO	DATE	ISSUE/REVISION	APP
7	4/16/2025	BIDDEFORD PERMIT APP.	DJB
6	9/17/2024	REVISED PERMIT SET	DJB
5	6/27/2024	REVISED PERMIT SET	DJB
4	9/14/2023	DEP PERMIT SET	DJB
3	6/28/2023	75% DESIGN SUBMISSION	DJB
2	2/15/2023	30% DESIGN SUBMISSION	DJB
1	12/9/2022	15% DESIGN SUB REV	DJB
0	11/11/2022	15% DESIGN SUBMISSION	DJB

SHEET NAME: **EROSION CONTROL DETAILS I**

SHEET NO.: **C-013**

BANNON, DAN \\geiconsultants.com\data\Data_Storage\Working\UNIVERSITY OF NEW ENGLAND\2203703 UNE Marine Science Center Pier\00_CAD\Design\Sheets\2203703-C-DETAILS.dwg - 4/16/2025

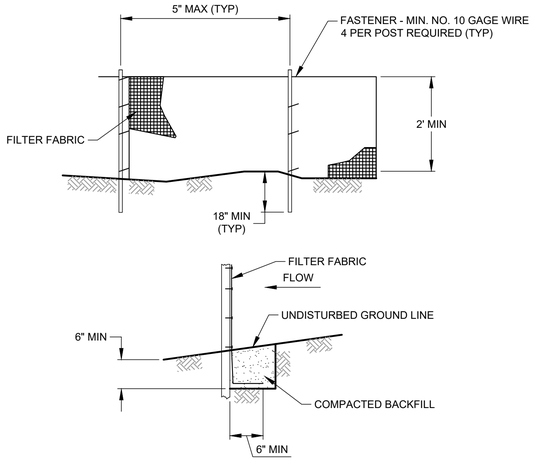

NOTES:
1. TEMPORARY SEDIMENT FENCE SHALL BE INSTALLED PRIOR TO ANY GRADING WORK IN THE AREA TO BE PROTECTED. THEY SHALL BE MAINTAINED THROUGHOUT THE CONSTRUCTION PERIOD AND REMOVED IN CONJUNCTION WITH THE FINAL GRADING AND SITE STABILIZATION.
2. FILTER FABRIC SHALL MEET THE REQUIREMENTS OF MATERIAL SPECIFICATION 592 GEOTEXTILE TABLE 1 OR 2, CLASS L WITH EQUIVALENT OPENING SIZE OF AT LEAST 30 FOR NONWOVEN AND 50 FOR WOVEN.
3. FENCE POSTS SHALL BE EITHER WOOD POST WITH A MINIMUM CROSS-SECTIONAL AREA OF 3 SQ. IN. OR A STANDARD STEEL POST.

5 SILT FENCE

NO SCALE

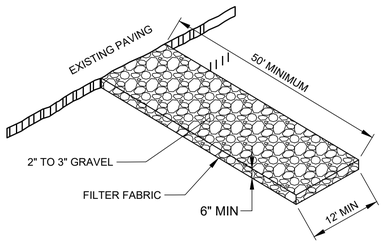

8 STABILIZED CONSTRUCTION ENTRANCE

NO SCALE

NOTES:

1. THE ENTRANCE/EXIT PAD SHOULD HAVE A LENGTH OF 50 FEET OR MORE AND A 12-FOOT MINIMUM WIDTH (OR AS APPROPRIATE TO CONTAIN THE WHEEL BASE OF CONSTRUCTION VEHICLES PLUS 3 FEET ON EITHER SIDE).
2. THE PAD SHOULD BE 6 INCHES OR MORE THICK WITH ANGULAR AGGREGATE (2-3 INCH DIAMETER). APPROPRIATE RECLAIMED CONCRETE MATERIAL MAY BE USED.
3. THE AGGREGATE SHOULD BE PLACED OVER A GEOTEXTILE FILTER TO PREVENT THE STONES FROM PUSHING INTO THE NATIVE SOIL.
4. AT THE BOTTOM OF SLOPES, A DIVERSION RIDGE SHOULD BE PROVIDED TO INTERCEPT RUNOFF.
5. BERMS MAY BE NECESSARY TO DIVERT WATER AROUND ANY EXPOSED SOIL, AND RUNOFF SHOULD BE DIRECTED TO A SEDIMENT TRAP.
6. THE WHEELS OF CONSTRUCTION EQUIPMENT MAY BE WASHED PRIOR TO EXITING THE SITE. WASHING SHOULD BE PERFORMED IN AN AREA THAT DRAINS TO A SEDIMENT TRAP OR BASIN.
7. THE PAD SHOULD BE INSPECTED WEEKLY, AND BEFORE AND AFTER EACH STORM. THE PAD MAY HAVE TO BE REPLACED IF THE VOIDS BECOME FILLED WITH SEDIMENT. STREET SWEEPING MAY BE NECESSARY

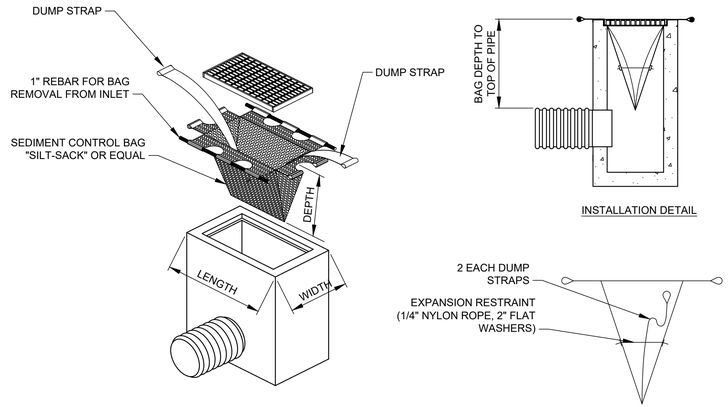

CB STYLE	LENGTH	WIDTH	DEPTH
TYPE 1 CB	2'-0"	1'-8"	VARIES
TYPCE 1 CCI	2'-5 1/2"	2'-0"	VARIES
USA G2	2'-8 1/2"	2'-3 1/2"	VARIES

NOTES:

1. THE DIMENSION CHART ABOVE IS FOR STANDARD CATCH BASINS AND INLETS ONLY. THE CONTRACTOR IS RESPONSIBLE FOR PROVIDING THE CORRECT SIZE DEVICE FOR EACH INLET.
2. FOR NON-STANDARD CATCH BASINS AND INLETS, THE CONTRACTOR SHALL MEASURE DIMENSIONS IN THE FIELD AND ORDER THE APPROPRIATE SIZE(S).
3. THE INLET SEDIMENT CONTROL DEVICE SHALL BE OF HIGH FLOW DESIGN (200 GAL/MIN/FT), AS PER THE MANUFACTURER'S SPECS.
4. THE SEDIMENT CONTROL DEVICE SHALL BE INSPECTED DAILY BY THE CONTRACTOR AND MAINTAINED A MINIMUM ONCE PER MONTH OR WITHIN THE 48 HOURS FOLLOWING A STORM EVENT. FILTER SHALL BE CLEANED IN A MANNER WHICH ENSURES THAT ALL SEDIMENT REMAINS ON SITE.
5. SUBSTITUTION OF A SHEET OF FILTER FABRIC PLACED OVER THE OPENING OF THE INLET IS NOT APPROVED.
6. RECESSED CURB INLET CATCH BASINS MUST BE BLOCKED WHEN USING FILTER FABRIC INLET SACKS, SIZE OF FILTER INLET SACK TO BE DETERMINED BY MANUFACTURER.
7. THE FILTER SHALL BE REPLACED OR CLEANED WHEN THE BAG BECOMES HALF FULL.
8. SEE INLET PROTECTION NOTES STD. DETAIL E3.

6 SILT SACK INLET PROTECTION

SCALE: N.T.S.

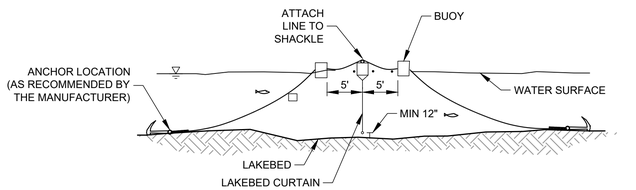

NOTES:
1. FLOATING TURBIDITY BARRIER CONSTRUCTION SHALL CONFORM WITH RELEVANT LOCAL AND STATE STANDARDS FOR SOIL EROSION AND SEDIMENT CONTROL.
2. FLOATING TURBIDITY BARRIER WILL BE INSPECTED AND MAINTAINED DAILY.

9 FLOATING TURBIDITY BARRIER

SCALE: N.T.S.

NOTES:
1. THE SOIL SURFACE SHOULD BE FINELY GRADED AND SMOOTH FOR THE BLANKET TO HAVE DIRECT CONTACT WITH THE SOIL AND TO PREVENT UNDERMINING. EROSION CONTROL BLANKETS PERFORM BEST ON LOAMY SOILS AND SHOULD NOT BE USED ON ROCKY SITES OR SHALLOW SOILS.
2. SEED SHOULD BE SOWN BEFORE INSTALLING THE EROSION CONTROL BLANKET.
3. ALWAYS UNROLL THE BLANKET DOWNHILL WITHOUT STRETCHING AND ANCHOR THE UPSLOPE EDGE IN A 12 INCH DEEP TRENCH THAT IS BACKFILLED AND TAMPED.
4. OVERLAP SHINGLE STYLE A MINIMUM OF 12 INCHES AT THE TOP OF EACH ROW AND 4 INCHES AT THE EDGES OF PARALLEL ROWS. ANCHOR ALONG THE OVERLAP WITH A MAXIMUM SPACING OF 3 FEET OR AS REQUIRED BY THE MANUFACTURER.

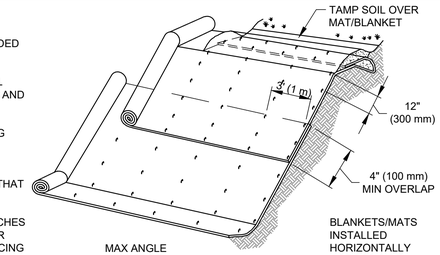

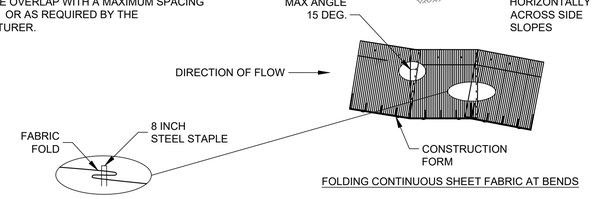

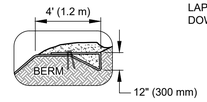

BERM

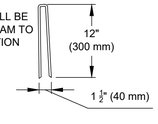

STAPLES

7 BIODEGRADABLE STABILIZATION MATTING

NO SCALE

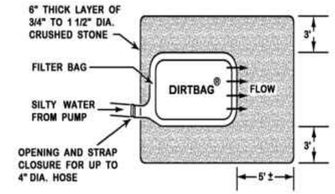

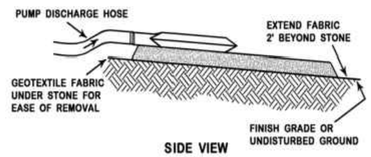

NOTES:
1. INSTALL THE FILTER BAG PRIOR TO INITIATING ANY ACTIVITIES WHICH WILL REQUIRE DEWATERING.
2. THE TYPE OF FABRIC SHOULD BE BASED ON THE SIZE OF SOIL PARTICLES TO BE TRAPPED (I.E. A WOVEN MATERIAL FOR COARSE PARTICLES AND A NONWOVEN MATERIAL FOR FINER PARTICLES).
3. A FILTER BAG SHOULD BE LOCATED IN AN AREA MOSTLY LEVEL (WITH LESS THAN 5% SLOPE). A PAD OF CRUSHED GRAVEL MAY BE PROVIDED.
4. AVOID DISCHARGING TO AN AREA THAT IS BARE OF VEGETATION OR NEWLY VEGETATED. ANY SIGN OF EROSION OR CHANNELIZATION FROM THE DISCHARGED WATER REQUIRES IMMEDIATELY CORRECTION.
5. FILTER BAGS HAVE A FINITE CAPACITY FOR SEDIMENT COLLECTION AND MAY BE PRONE TO PLUGGING. AVOID OVER-PRESSURIZING THE BAG OR IT MAY BURST.

10 GEOTEXTILE FILTER BAG

NO SCALE

FOR PERMIT

Attention:
0 1"
If this scale bar does not measure 1" then drawing is not original scale.

STATE OF MAINE
DANIEL J. BANNON
No. 13033
LICENSED PROFESSIONAL ENGINEER
4/16/2025

Designed:	DJB
Drawn:	JAM
Checked:	BJB
Approved:	BMM
P.E. No:	13033
GEI Project	2203703

GEI Consultants
GEI CONSULTANTS, INC.
5 MILK STREET
PORTLAND, ME 04101
(207)797-8901

UNE
UNIVERSITY OF NEW ENGLAND
11 HILLS BEACH RD.
BIDDEFORD, MAINE

UNIVERSITY OF NEW ENGLAND MARINE SCIENCE CENTER PIER
11 HILLS BEACH ROAD
BIDDEFORD, YORK COUNTY, MAINE

NO	DATE	ISSUE/REVISION	APP
7	4/16/2025	BIDDEFORD PERMIT APP.	DJB
6	9/17/2024	REVISED PERMIT SET	DJB
5	6/27/2024	REVISED PERMIT SET	DJB
4	9/14/2023	DEP PERMIT SET	DJB
3	6/28/2023	75% DESIGN SUBMISSION	DJB
2	2/15/2023	30% DESIGN SUBMISSION	DJB
1	12/9/2022	15% DESIGN SUB REV	DJB
0	11/11/2022	15% DESIGN SUBMISSION	DJB

SHEET NAME: **EROSION CONTROL DETAILS II**

SHEET NO.: **C-014**

BANNON, DAN \\geiconsultants.com\data\Data_Storage\Working\UNIVERSITY OF NEW ENGLAND\2203703 UNE Marine Science Center Pier\00_CAD\Design\Sheets\2203703-C-DETAILS.dwg - 4/16/2025

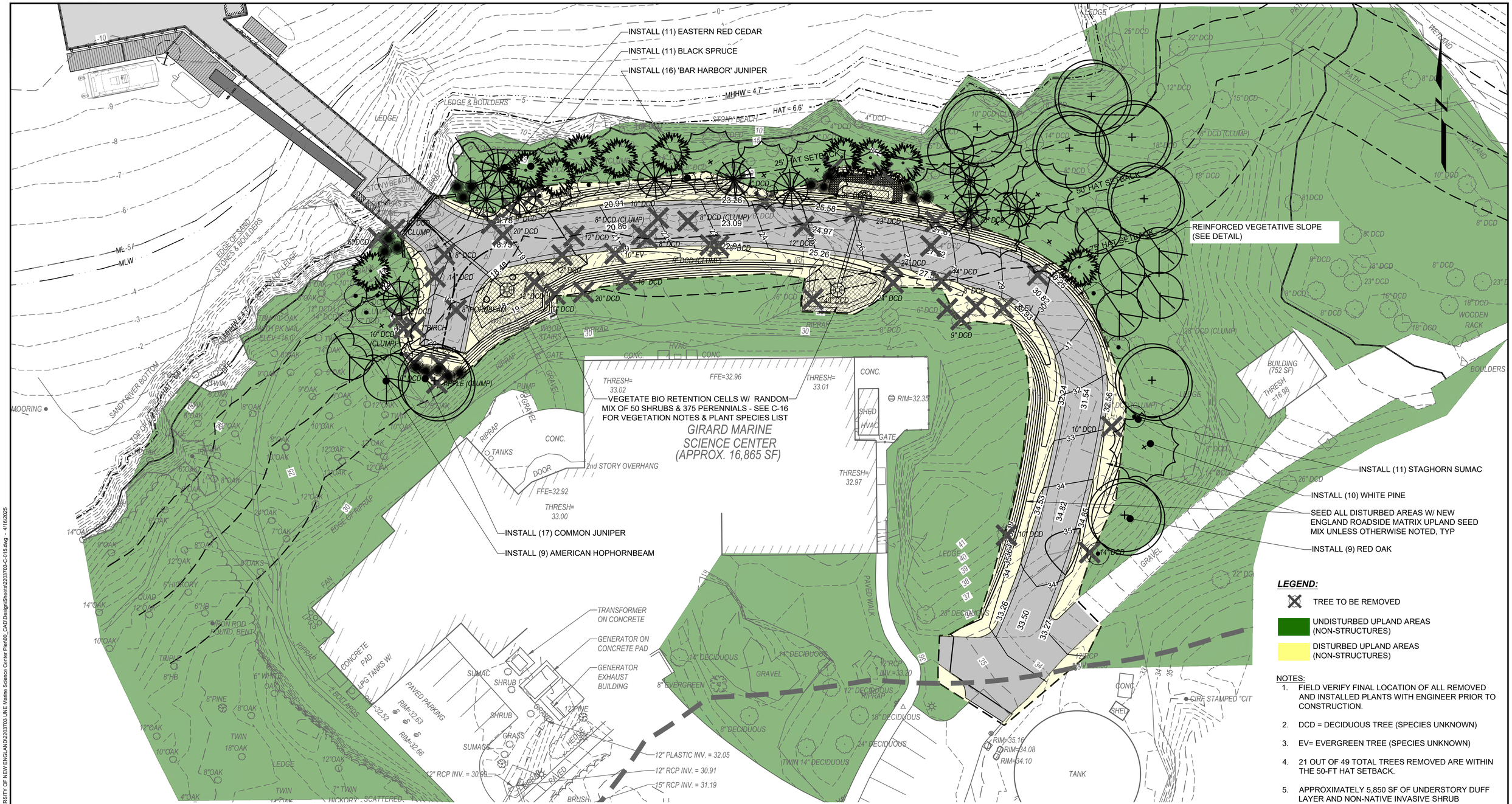

NOTES:

1. FIELD VERIFY FINAL LOCATION OF ALL REMOVED AND INSTALLED PLANTS WITH ENGINEER PRIOR TO CONSTRUCTION.
2. DCD = DECIDUOUS TREE (SPECIES UNKNOWN)
3. EV= EVERGREEN TREE (SPECIES UNKNOWN)
4. 21 OUT OF 49 TOTAL TREES REMOVED ARE WITHIN THE 50-FT HAT SETBACK.
5. APPROXIMATELY 5,850 SF OF UNDERSTORY DUFF LAYER AND NON-NATIVE INVASIVE SHRUB HONEYSUCKLE (*LONICERA MORROWII*) WILL BE REMOVED WITHIN THE 50-FT HAT SETBACK.

PLAN
SCALE: 1" = 20'

FOR PERMIT

0 20 40
SCALE, FEET

Attention:
0 1"
If this scale bar does not measure 1" then drawing is not original scale.

STATE OF MAINE
DANIEL J. BANNON
No. 13033
LICENSED PROFESSIONAL ENGINEER
4/16/2025

Designed:	DJB
Drawn:	JAM
Checked:	BJB
Approved:	BMM
P.E. No:	13033
GEI Project	2203703

GEI Consultants
GEI CONSULTANTS, INC.
5 MILK STREET
PORTLAND, ME 04101
(207)797-8901

UNE
UNIVERSITY OF NEW ENGLAND
11 HILLS BEACH RD.
BIDDEFORD, MAINE

UNIVERSITY OF NEW ENGLAND MARINE SCIENCE CENTER PIER
11 HILLS BEACH ROAD
BIDDEFORD, YORK COUNTY, MAINE

NO	DATE	ISSUE/REVISION	
7	4/16/2025	BIDDEFORD PERMIT APP.	DJB
6	9/17/2024	REVISED PERMIT SET	DJB
5	6/27/2024	REVISED PERMIT SET	DJB
4	9/14/2023	DEP PERMIT SET	DJB
3	6/28/2023	75% DESIGN SUBMISSION	DJB
2	2/15/2023	30% DESIGN SUBMISSION	DJB
1	12/9/2022	15% DESIGN SUB REV	DJB
0	11/11/2022	15% DESIGN SUBMISSION	DJB

SHEET NAME: **REVEGETATION PLAN**

SHEET NO.: **C-015**

BANNON, DAN \\gisconsultants.com\data\Data_Storage\Working\UNIVERSITY OF NEW ENGLAND\2203703 UNE Marine Science Center Pier\00_CAD\Design\Sheets\2203703-C-015.dwg - 4/16/2025

VEGETATION GENERAL NOTES:

1. VEGETATION MANAGEMENT (INSTALLATION AND MAINTENANCE) SHALL COMPLY WITH CITY OF BIDDEFORD SHORELAND ZONING ORDINANCE REQUIREMENTS.
   - 1.1. ALL REVEGETATION MUST OCCUR ALONG THE SAME SEGMENT OF SHORELINE AND IN AS CLOSE OF PROXIMITY AS PRACTICAL TO THE LOCATION WHERE THE VEGETATION WAS REMOVED.
   - 1.2. ALL VEGETATION REMOVED MUST BE REPLACED WITH NATIVE, NON-INVASIVE SPECIES.
   - 1.3. AT LEAST THREE DIFFERENT SPECIES OF TREES AND WOODY VEGETATION UNDER THREE FEET IN HEIGHT SHALL BE USED.
   - 1.4. NO MORE THAN ONE SPECIES OF TREES AND WOODY VEGETATION UNDER THREE FEET IN HEIGHT SHALL MAKE UP MORE THAN 50% OF THE TOTAL NUMBER OF TREES AND WOOD VEGETATION UNDER THREE FEET IN HEIGHT PLANTED.
   - 1.5. SURVIVAL OF ALL VEGETATION MUST BE MAINTAINED FOR A MINIMUM OF FIVE YEARS.
2. ALL REMOVED NON-NATIVE PLANT MATERIAL SHALL BE PROPERLY DISPOSED OF BY BURNING ON-SITE OR DISPOSAL AT A WASTE RECEIVING FACILITY.
3. AN UPDATED LIST OF NON-NATIVE INVASIVE VEGETATION IS MAINTAINED BY THE DEPARTMENT OF AGRICULTURE, CONSERVATION AND FORESTRY'S NATURAL AREAS PROGRAM:
4. HTTPS://WWW.MAINE.GOV/DACF/MNAP/FEATURES/INVASIVE_PLANTS/INVASIVES.HTM
5. PLANT SPECIES SUBSTITUTIONS SHALL BE APPROVED BY THE OWNER. CONTRACTOR SHALL REFERENCE THE FOLLOWING RESOURCES FOR COASTAL PLANT LIST GUIDELINES: CUMBERLAND COUNTY SOIL & WATER CONSERVATION DISTRICT - COASTAL PLANTING GUIDE; UNIVERSITY OF MAINE COOPERATE EXTENSION; AND/OR THE WILD SEED PROJECT.

VEGETATION INSTALLATION NOTES:

1. THE CONTRACTOR SHALL TAKE CARE NOT TO DAMAGE VEGETATION WITHIN THE CONSTRUCTION AREA UNLESS NOTED TO BE REMOVED, LIMBED OR PRUNED. THIS MAY REQUIRE HAND EXCAVATION WITHIN TREE DRIPLINES.
2. ALL PLANT MATERIAL SELECTIONS SHALL BE APPROVED BY THE OWNER PRIOR TO INSTALLATION.
3. ALL NEW PLANTING MATERIAL SHALL CONFORM TO THE MINIMUM GUIDELINES ESTABLISHED FOR NURSERY STOCK PUBLISHED BY THE AMERICAN ASSOCIATION OF NURSERYMEN, INC. IN ADDITION ALL NEW PLANT MATERIAL FOR THE PROJECT SHALL BE OF THE HIGHEST SPECIMEN QUALITY.
4. ALL NEW PLANTS SHALL BE BALLED AND BURLAPPED OR CONTAINER GROWN UNLESS OTHERWISE NOTED ON THE PLANT LIST.
5. CONTRACTOR SHALL SUPPLY ALL NEW PLANT MATERIAL IN QUANTITIES SUFFICIENT TO COMPLETE THE PLANTING SHOWN ON THE DRAWINGS.
6. NO TREES SHALL BE PLANTED BEFORE ACCEPTANCE OF ROUGH GRADING. TREES SHALL BEAR SAME RELATIONSHIP TO FINISH GRADE AS THEY BORE TO PREVIOUS GRADE.
7. STAKE LOCATION OF ALL PROPOSED PLANTING FOR APPROVAL BY THE OWNER PRIOR TO COMMENCEMENT OF PLANTING.
8. ALL EXISTING TREES TO REMAIN SHALL BE PROPERLY PROTECTED, PRUNED AND FERTILIZED PER THE SPECIFICATIONS.
9. ALL LAWN AREAS DISTURBED BY CONSTRUCTION OPERATIONS INSIDE AND OUTSIDE THE LIMIT OF WORK SHALL BE LOAMED AND SEEDED AS SPECIFIED.
10. ALL PLANT BEDS ARE TO RECEIVE THREE INCHES (4") OF SHREDDED BARK MULCH AS SPECIFIED.
11. ANY PROPOSED SUBSTITUTIONS OF PLANT SPECIES SHALL BE MADE WITH PLANTS OF EQUIVALENT OVERALL FORM, HEIGHT, BRANCHING HABIT, FLOWER, LEAF, COLOR, FRUIT AND CULTURE ONLY AS APPROVED BY OWNER.
12. ALL AREAS TO BE SEEDED SHALL RECEIVE SOIL PREPARATION AS SPECIFIED PRIOR TO SEEDING, UNLESS OTHERWISE NOTED ON PLAN.
13. PREPARE ALL PLANT PITS WITH PLANTING SOIL TO A MINIMUM DEPTH MATCHING THE DEPTH OF ROOT BALLS.
14. NATIVE PLANT SPECIES REMOVED SHALL BE REPLANTED WITH IN-KIND SPECIES AND/OR THOSE PROVIDE IN THE PLANT LIST.

PLANT LIST

KEY	QTY	*SCIENTIFIC NAME* COMMON NAME	SIZE	SPACING	ROOTING	MATURE SIZE	NOTES
TREES							
CC	9	*CARPINUS CAROLINIANA* AMERICAN HORNBEAM	1" CAL	10' O.C.	B&B / CONT	25' HT / 25' W	REPLACE REMOVED TREES 1 FOR 1 AT LOCATIONS AS INDICATED ON THE REVEGETATION PLAN.
JV	10	*JUNIPERUS VIRGINIANA* EASTERN RED CEDAR	3'-4' HT	10' O.C.	B&B / CONT	35' HT / 15' W	
PM	10	*PICEA MARIANA* BLACK SPRUCE	5'-6' HT	10' O.C.	B&B / CONT	35' HT / 15' W	
PS	10	*PINUS STROBUS* WHITE PINE	6'-7' HT	15' O.C.	B&B / CONT	75' HT / 35' W	
QR	9	*QUERCUS RUBRA* RED OAK	1.5 - 2" CAL	25' O.C.	B&B / CONT	75' HT / 50' W	
SHRUBS							
JC	17	*JUNIPERUS COMMUNIS* COMMON JUNIPER	18"-24" HT	5' O.C.	CONT	10' HT / 10' W	PLANT SHRUBS AT LOCATIONS AS INDICATED ON THE REVEGETATION PLAN.
JH	16	*JUNIPERUS HORIZONTALS 'BAR HARBOR'* BAR HARBOR CREEPING JUNIPER	5-7 PPP	6' O.C.	CONT	1.5' HT / 10' W	
RT	11	*RHUS TYPHINA* STAGHORN SUMAC	18"-24" HT	10' O.C.	B&B / CONT	20' HT / 25' W	
BIORETENTION CELL PLANTING							
AS	75	*ASCLEPIAS SYRIACA* COMMON MILKWEED	5-7 PPP	18" O.C.	CONT	2' HT / 3' W	PROVIDE A RANDOM MIX OF EQUAL QUANTITIES OF EACH PERENNIAL AND SHRUB SPECIES THROUGHOUT BIO RETENTION CELLS. PLANT EACH SPECIES AS INDIVIDUALS OR IN GROUPINGS OF THREE.
IR	75	*IRIS VERSICOLOR* BLUE FLAG IRIS	5-7 PPP	18" O.C.	CONT	18"' HT / 2' W	
IV	25	*ILEX VERTICILLATA* WINTERBERRY	12"-18" HT	3' O.C.	CONT	8' HT / 8' W	
MP	25	*MYRICA PENSYLVANICA* NORTHERN BAYBERRY	12"-18" HT	3' O.C.	CONT	8' HT / 8' W	
PV	75	*PANICUM VIRGATUM* SWITCHGRASS	5-7 PPP	18" O.C.	CONT	3' HT / 2' W	
SN	75	*SYMPHYOTRICHUM NOVAE-ANGLIAE* NEW ENGLAND ASTER	5-7 PPP	18" O.C.	CONT	2' HT / 3' W	
SS	75	*SOLIDAGO SEMPERVIRENS* SEASIDE GOLDENROD	5-7 PPP	18" O.C.	CONT	2' HT / 3' W	
SEED MIX							
SOW NEW ENGLAND ROADSIDE MATRIX UPLAND SEED MIX ON ALL DISTURBED AREAS UNLESS OTHERWISE NOTED ON REVEGETATION PLAN.							

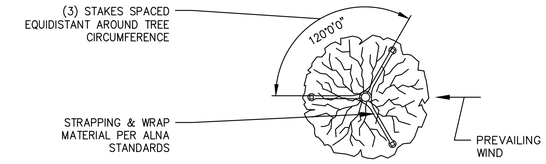

PLAN

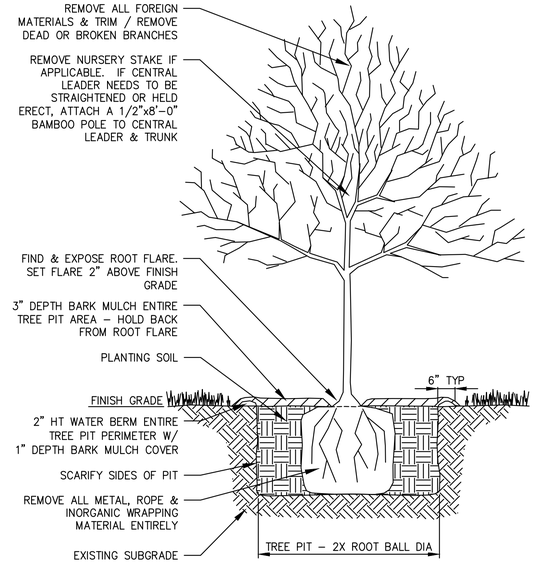

TREE INSTALLATION </= 10–FT

NOT TO SCALE

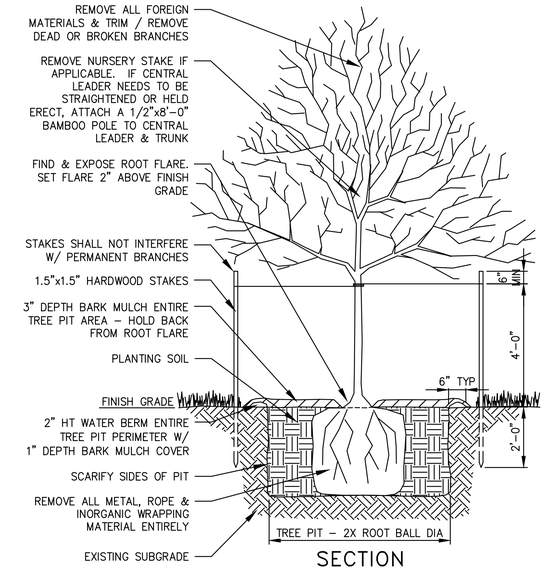

SECTION

TREE INSTALLATION > 10–FT

NOT TO SCALE

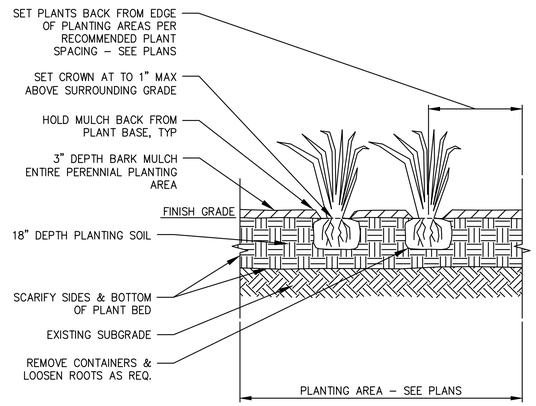

PERENNIAL INSTALLATION

NOT TO SCALE

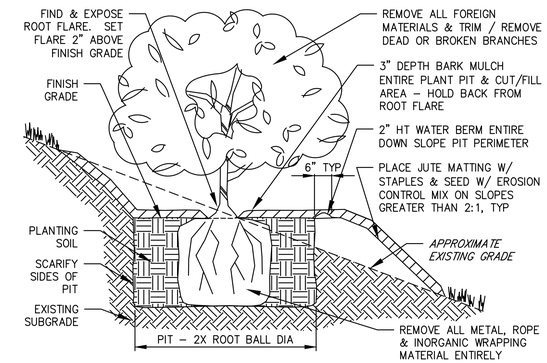

SHRUB INSTALLATION ON SLOPE

NOT TO SCALE

FOR PERMIT

ELEVATION	MLLW	NAVD88*
BFE	+19.0	+14.0
HAT	+11.6	+6.6
MHHW	+9.7	+4.7
MHW	+9.3	+4.3
MSL	+4.8	-0.2
MLW	+0.3	-4.7
MLLW	0.0	-5.0

*PROJECT DATUM

Attention:
0 1"
If this scale bar does not measure 1" then drawing is not original scale.

STATE OF MAINE DANIEL J. BANNON No. 13033 LICENSED PROFESSIONAL ENGINEER
4/16/2025

Designed:	DJB
Drawn:	JAM
Checked:	BJB
Approved:	BMM
P.E. No:	13033
GEI Project	2203703

GEI Consultants
GEI CONSULTANTS, INC.
5 MILK STREET
PORTLAND, ME 04101
(207)797-8901

UNE
UNIVERSITY OF NEW ENGLAND
11 HILLS BEACH RD.
BIDDEFORD, MAINE

UNIVERSITY OF NEW ENGLAND MARINE SCIENCE CENTER PIER
11 HILLS BEACH ROAD
BIDDEFORD, YORK COUNTY, MAINE

NO	DATE	ISSUE/REVISION	APP
7	4/16/2025	BIDDEFORD PERMIT APP.	DJB
6	9/17/2024	REVISED PERMIT SET	DJB
5	6/27/2024	REVISED PERMIT SET	DJB
4	9/14/2023	DEP PERMIT SET	DJB
3	6/28/2023	75% DESIGN SUBMISSION	DJB
2	2/15/2023	30% DESIGN SUBMISSION	DJB
1	12/9/2022	15% DESIGN SUB REV	DJB
0	11/11/2022	15% DESIGN SUBMISSION	DJB

SHEET NAME
REVEGETATION NOTES, DETAILS AND SCHEDULES

SHEET NO.
C-016

BANNON, DAN \\geiconsultants.com\data\Data_Storage\Working\UNIVERSITY OF NEW ENGLAND\2203703 UNE Marine Science Center Pier\00_CAD\Design\Sheets\2203703-C-016.dwg - 4/16/2025

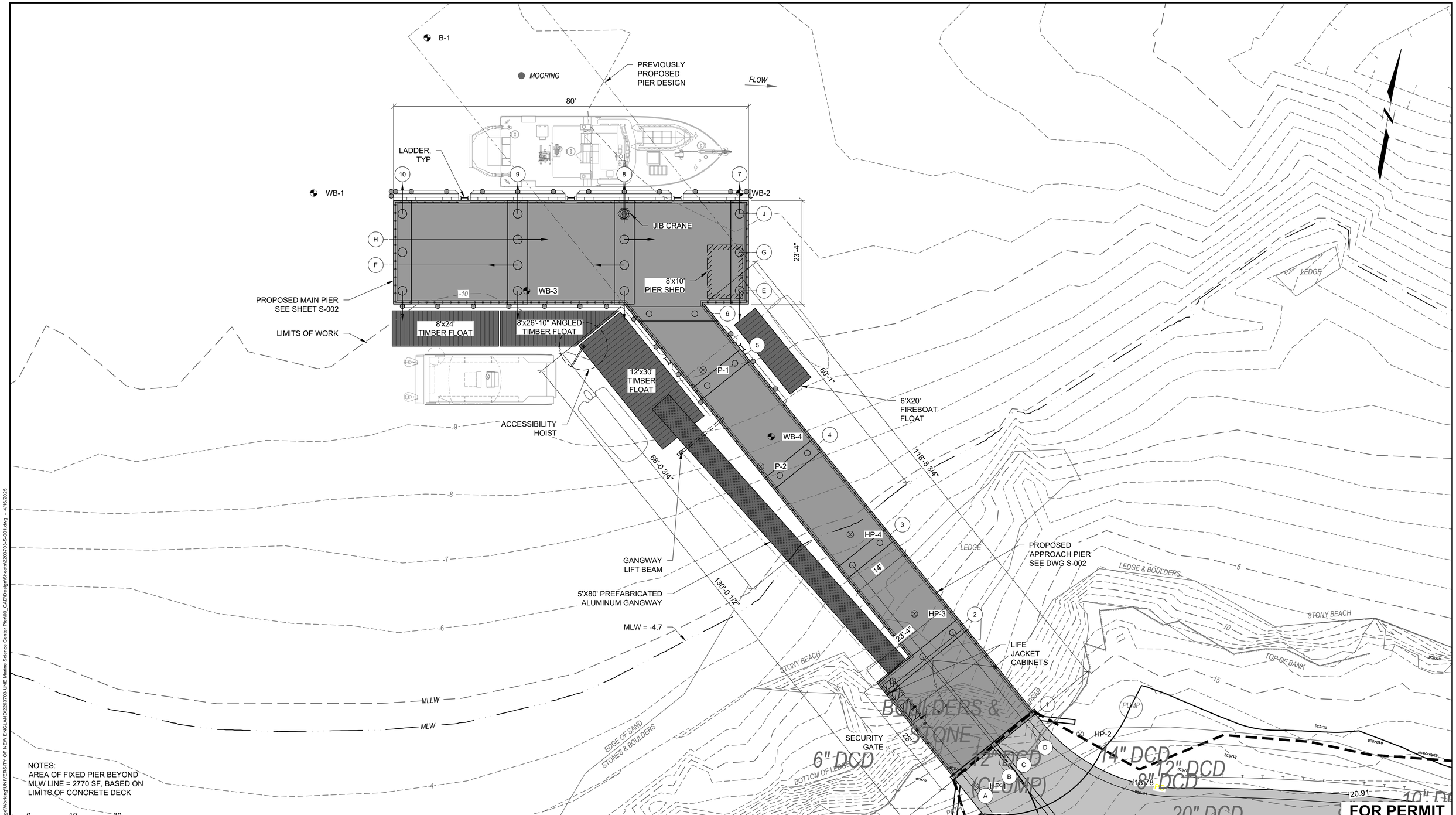

NOTES:
AREA OF FIXED PIER BEYOND MLW LINE = 2770 SF, BASED ON LIMITS OF CONCRETE DECK

0 10 20
SCALE, FEET

ELEVATION	MLLW	NAVD88*
BFE	+19.0	+14.0
HAT	+11.6	+6.6
MHHW	+9.7	+4.7
MHW	+9.3	+4.3
MSL	+4.8	-0.2
MLW	+0.3	-4.7
MLLW	0.0	-5.0

*PROJECT DATUM

Attention:
0 1"
If this scale bar does not measure 1" then drawing is not original scale.

STATE OF MAINE
DANIEL J. BANNON
No. 13033
LICENSED PROFESSIONAL ENGINEER
4/16/2025

Designed:	DJB
Drawn:	JAM
Checked:	BJB
Approved:	BMM
P.E. No:	13033
GEI Project	2203703

GEI Consultants
GEI CONSULTANTS, INC.
5 MILK STREET
PORTLAND, ME 04101
(207)797-8901

UNE
UNIVERSITY OF NEW ENGLAND
11 HILLS BEACH RD.
BIDDEFORD, MAINE

UNIVERSITY OF NEW ENGLAND MARINE SCIENCE CENTER PIER

11 HILLS BEACH ROAD
BIDDEFORD, YORK COUNTY, MAINE

NO	DATE	ISSUE/REVISION	APP
7	4/16/2025	BIDDEFORD PERMIT APP.	DJB
6	9/17/2024	REVISED PERMIT SET	DJB
5	6/27/2024	REVISED PERMIT SET	DJB
4	9/14/2023	DEP PERMIT SET	DJB
3	6/28/2023	75% DESIGN SUBMISSION	DJB
2	2/15/2023	30% DESIGN SUBMISSION	DJB
1	12/9/2022	15% DESIGN SUB REV	DJB
0	11/11/2022	15% DESIGN SUBMISSION	DJB

SHEET NAME
PIER LAYOUT PLAN

SHEET NO.
S-001

FOR PERMIT

BANNON, DAN \\geiconsultants.com\data\Data_Storage\Working\UNIVERSITY OF NEW ENGLAND\2203703 UNE Marine Science Center Pier\00_CAD\Design\Sheets\2203703-S-001.dwg - 4/16/2025

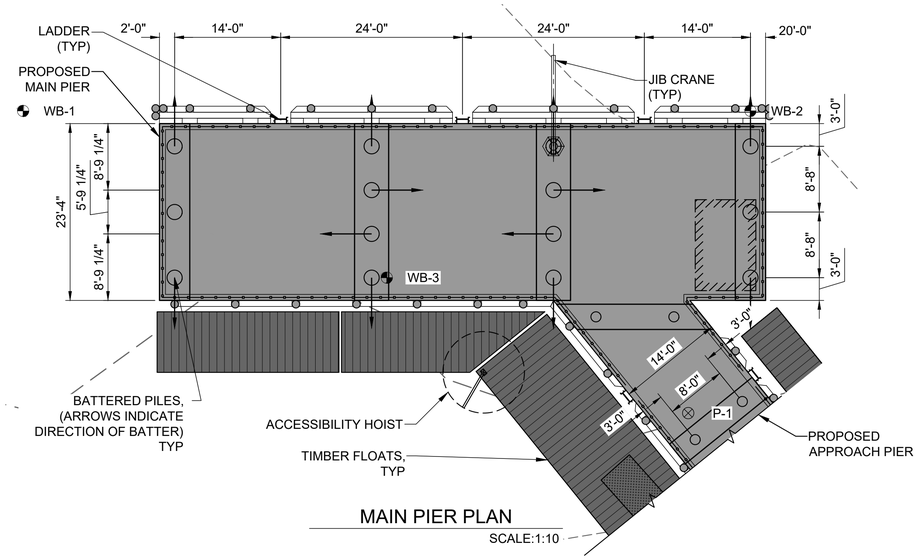

MAIN PIER PLAN

SCALE:1:10

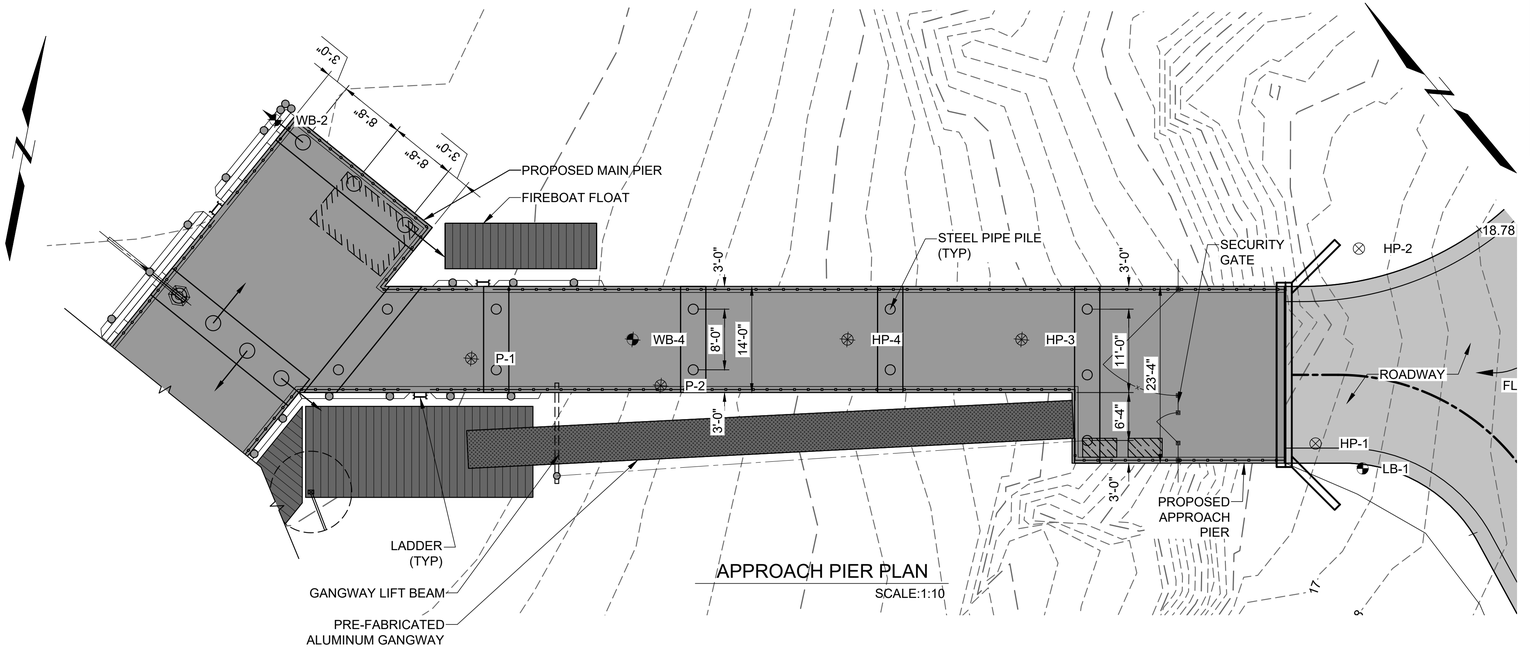

APPROACH PIER PLAN

SCALE:1:10

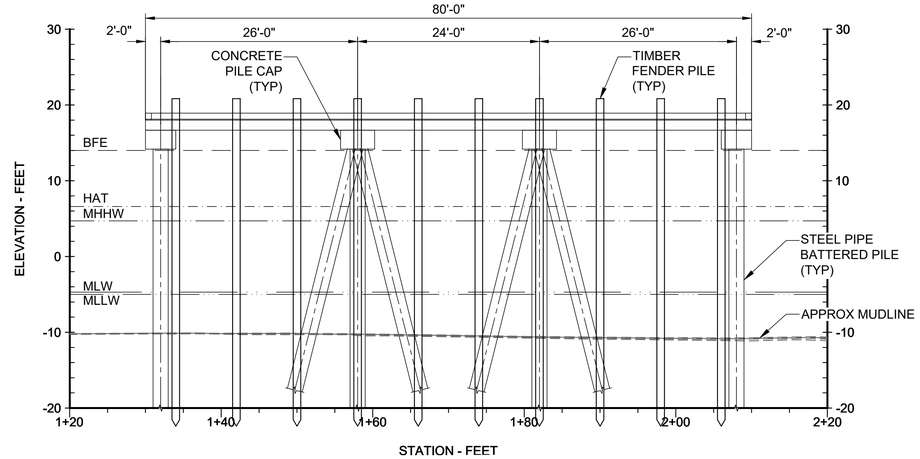

MAIN PIER ELEVATION

SCALE:1:10

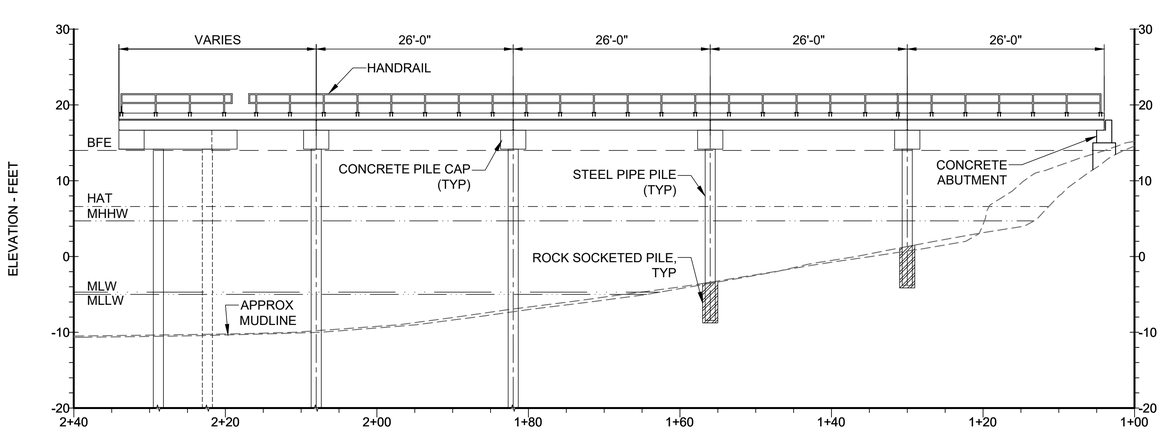

APPROACH PIER ELEVATION

SCALE:1:10

0 10 20

SCALE, FEET

ELEVATION	MLLW	NAVD88*
BFE	+19.0	+14.0
HAT	+11.6	+6.6
MHHW	+9.7	+4.7
MHW	+9.3	+4.3
MSL	+4.8	-0.2
MLW	+0.3	-4.7
MLLW	0.0	-5.0

*PROJECT DATUM

FOR PERMIT

Attention:

0 1"

If this scale bar does not measure 1" then drawing is not original scale.

STATE OF MAINE — DANIEL J. BANNON No. 13033 — LICENSED PROFESSIONAL ENGINEER — 4/16/2025

Designed:	DJB
Drawn:	JAM
Checked:	BJB
Approved:	BMM
P.E. No:	13033
GEI Project	2203703

GEI Consultants
GEI CONSULTANTS, INC.
5 MILK STREET
PORTLAND, ME 04101
(207)797-8901

UNIVERSITY OF NEW ENGLAND

11 HILLS BEACH RD.
BIDDEFORD, MAINE

UNIVERSITY OF NEW ENGLAND MARINE SCIENCE CENTER PIER

11 HILLS BEACH ROAD
BIDDEFORD, YORK COUNTY, MAINE

NO	DATE	ISSUE/REVISION	APP
7	4/16/2025	BIDDEFORD PERMIT APP.	DJB
6	9/17/2024	REVISED PERMIT SET	DJB
5	6/27/2024	REVISED PERMIT SET	DJB
4	9/14/2023	DEP PERMIT SET	DJB
3	6/28/2023	75% DESIGN SUBMISSION	DJB
2	2/15/2023	30% DESIGN SUBMISSION	DJB
1	12/9/2022	15% DESIGN SUB REV	DJB
0	11/11/2022	15% DESIGN SUBMISSION	DJB

SHEET NAME

PIER PLANS AND ELEVATIONS

SHEET NO.

S-002

BANNON, DAN Y:\gisconsultants.com\data\Data_Storage\Working\UNIVERSITY OF NEW ENGLAND\2203703 UNE Marine Science Center Pier\00_CAD\Design\Sheets\2203703-S-002.dwg - 4/16/2025

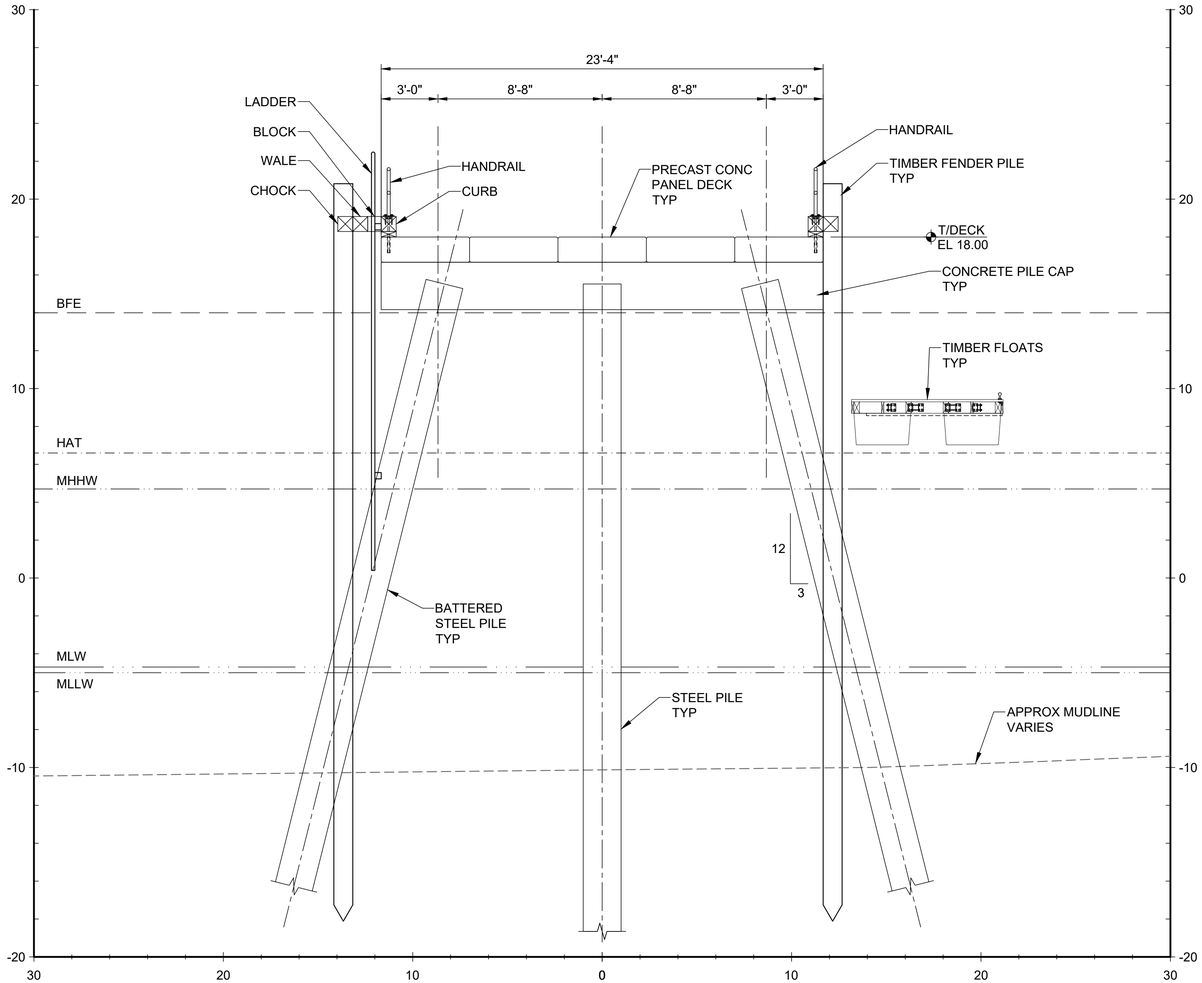

SECTION
MAIN PIER AT BENT 10 SCALE: 1"=4'

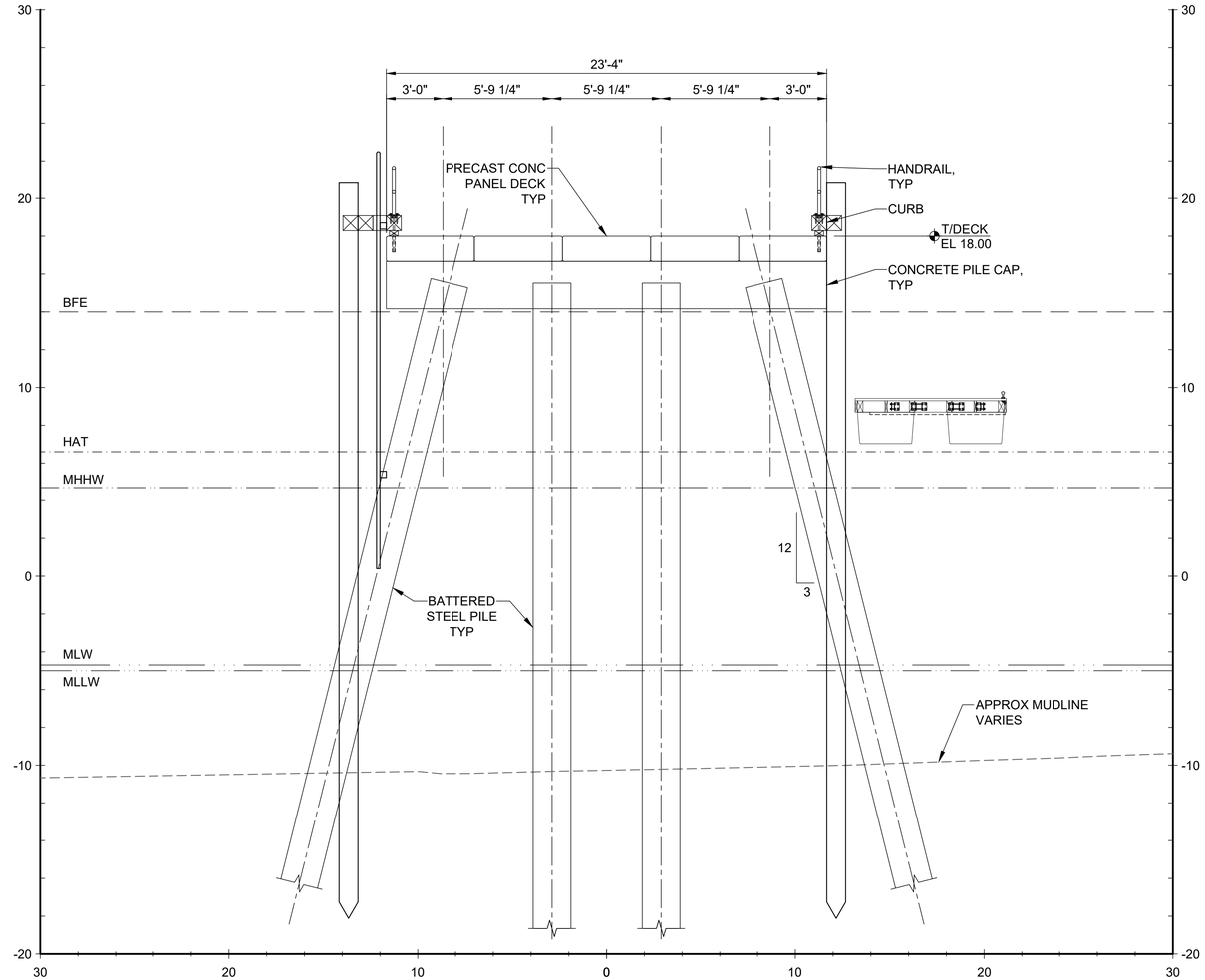

SECTION
MAIN PIER AT BENT 9 SCALE: 1"=4'

0 2 4 8
SCALE, FEET

ELEVATION	MLLW	NAVD88*
BFE	+19.0	+14.0
HAT	+11.6	+6.6
MHHW	+9.7	+4.7
MHW	+9.3	+4.3
MSL	+4.8	-0.2
MLW	+0.3	-4.7
MLLW	0.0	-5.0

*PROJECT DATUM

FOR PERMIT

Attention:
0 1"
If this scale bar does not measure 1" then drawing is not original scale.

STATE OF MAINE
DANIEL J. BANNON
No. 13033
LICENSED PROFESSIONAL ENGINEER
4/16/2025

Designed:	DJB
Drawn:	JAM
Checked:	BJB
Approved:	BMM
P.E. No:	13033
GEI Project	2203703

GEI Consultants
GEI CONSULTANTS, INC.
5 MILK STREET
PORTLAND, ME 04101
(207)797-8901

UNIVERSITY OF NEW ENGLAND
11 HILLS BEACH RD.
BIDDEFORD, MAINE

UNIVERSITY OF NEW ENGLAND MARINE SCIENCE CENTER PIER

11 HILLS BEACH ROAD
BIDDEFORD, YORK COUNTY, MAINE

NO	DATE	ISSUE/REVISION	APP
7	4/16/2025	BIDDEFORD PERMIT APP.	DJB
6	9/17/2024	REVISED PERMIT SET	DJB
5	6/27/2024	REVISED PERMIT SET	DJB
4	9/14/2023	DEP PERMIT SET	DJB
3	6/28/2023	75% DESIGN SUBMISSION	DJB
2	2/15/2023	30% DESIGN SUBMISSION	DJB
1	12/9/2022	15% DESIGN SUB REV	DJB
0	11/11/2022	15% DESIGN SUBMISSION	DJB

SHEET NAME
TYPICAL PIER SECTIONS (1 OF 2)

SHEET NO.
S-003

BANNON, DAN \\geiconsultants.com\data\Data_Storage\Working\UNIVERSITY OF NEW ENGLAND\2203703 UNE Marine Science Center Pier\00_CAD\Design\Sheets\2203703-S-003.dwg - 4/16/2025

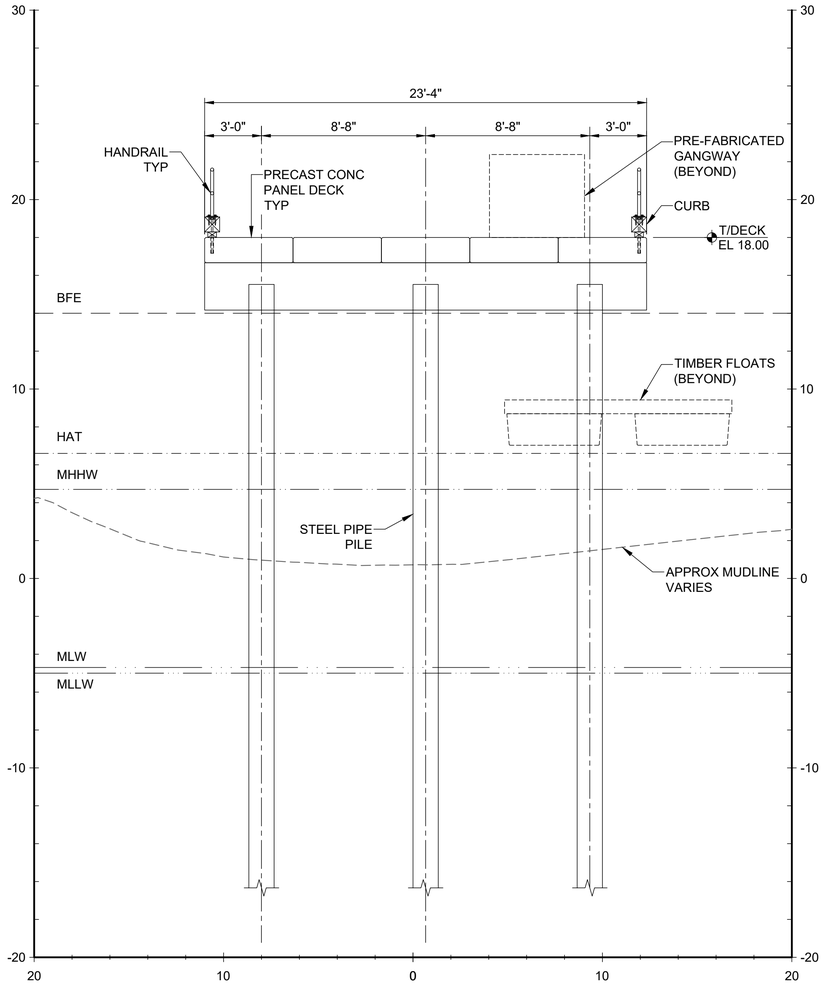

SECTION
28' WIDE APPROACH PIER AT BENT 2 SCALE: 1"=4'

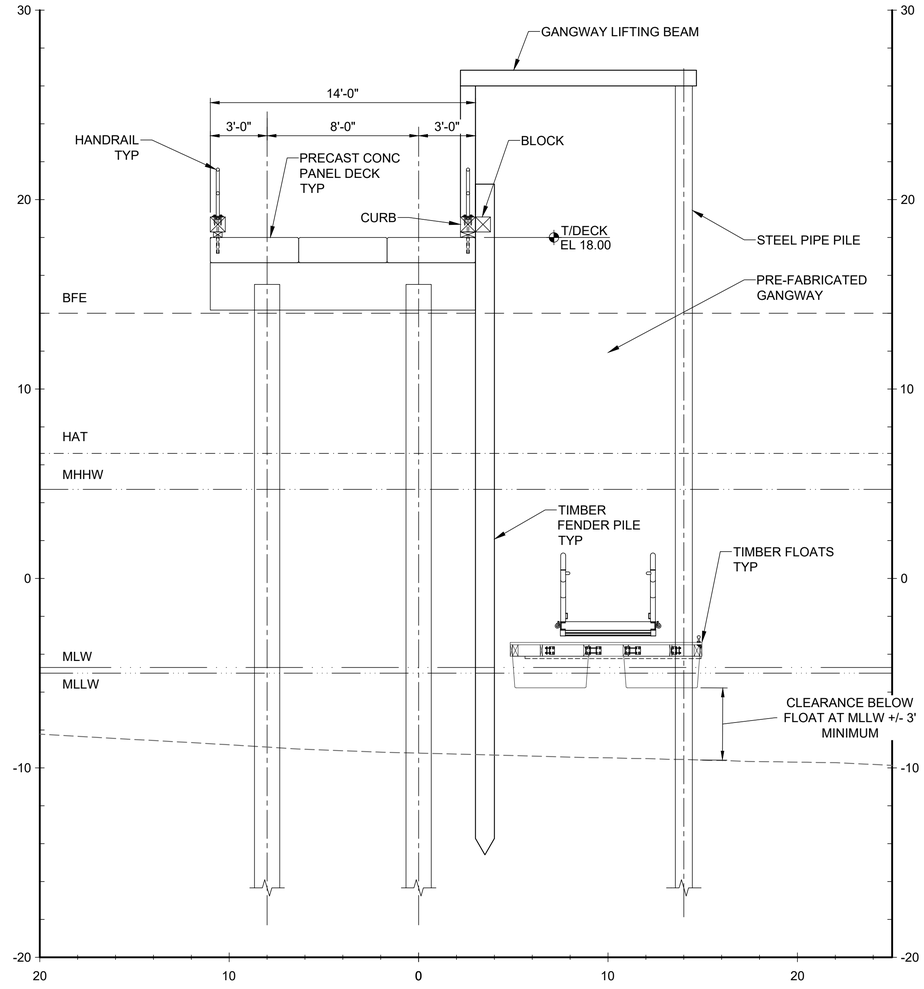

SECTION
14' WIDE APPROACH PIER AT GANGWAY HOIST SCALE: 1"=4'

0 2 4 8
SCALE, FEET

ELEVATION	MLLW	NAVD88*
BFE	+19.0	+14.0
HAT	+11.6	+6.6
MHHW	+9.7	+4.7
MHW	+9.3	+4.3
MSL	+4.8	-0.2
MLW	+0.3	-4.7
MLLW	0.0	-5.0

*PROJECT DATUM

FOR PERMIT

Attention:
0 1"
If this scale bar does not measure 1" then drawing is not original scale.

STATE OF MAINE
DANIEL J. BANNON
No. 13033
LICENSED PROFESSIONAL ENGINEER
4/16/2025

Designed:	DJB
Drawn:	JAM
Checked:	BJB
Approved:	BMM
P.E. No:	13033
GEI Project	2203703

GEI Consultants
GEI CONSULTANTS, INC.
5 MILK STREET
PORTLAND, ME 04101
(207)797-8901

UNIVERSITY OF NEW ENGLAND
11 HILLS BEACH RD.
BIDDEFORD, MAINE

UNIVERSITY OF NEW ENGLAND MARINE SCIENCE CENTER PIER

11 HILLS BEACH ROAD
BIDDEFORD, YORK COUNTY, MAINE

NO	DATE	ISSUE/REVISION	APP
7	4/16/2025	BIDDEFORD PERMIT APP.	DJB
6	9/17/2024	REVISED PERMIT SET	DJB
5	6/27/2024	REVISED PERMIT SET	DJB
4	9/14/2023	DEP PERMIT SET	DJB
3	6/28/2023	75% DESIGN SUBMISSION	DJB
2	2/15/2023	30% DESIGN SUBMISSION	DJB
1	12/9/2022	15% DESIGN SUB REV	DJB
0	11/11/2022	15% DESIGN SUBMISSION	DJB

SHEET NAME
TYPICAL PIER SECTIONS (2 OF 2)

SHEET NO.
S-004

BANNON, DAN \\geiconsultants.com\data\Data_Storage\Working\UNIVERSITY OF NEW ENGLAND\2203703 UNE Marine Science Center Pier\00_CAD\Design\Sheets\2203703-S-004.dwg - 4/16/2025

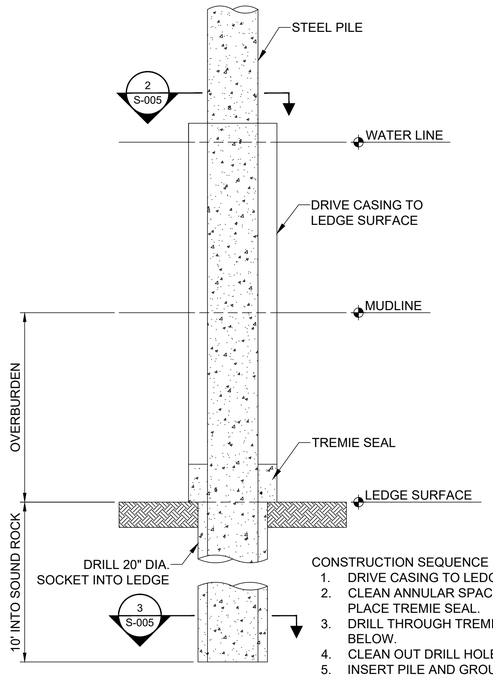

CONSTRUCTION SEQUENCE
1. DRIVE CASING TO LEDGE SURFACE.
2. CLEAN ANNULAR SPACE TO LEDGE SURFACE, PLACE TREMIE SEAL.
3. DRILL THROUGH TREMIE INTO SOUND ROCK BELOW.
4. CLEAN OUT DRILL HOLE.
5. INSERT PILE AND GROUT TO SURFACE.
6. REMOVE CASING.
7. FILL STEEL PIPE PILE TO TOP WITH CONCRETE.

1 DETAIL
PILE SOCKET SCALE: 1" = 2'

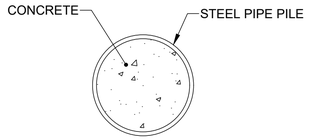

2 SECTION
CONCRETE FILLED STEEL PIPE PILE SCALE: 1" = 1'

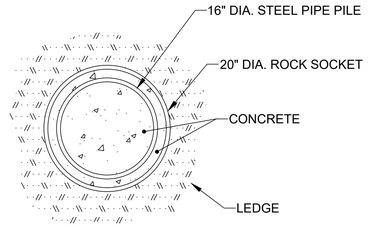

3 SECTION
ROCK SOCKET SCALE: 1" = 1'

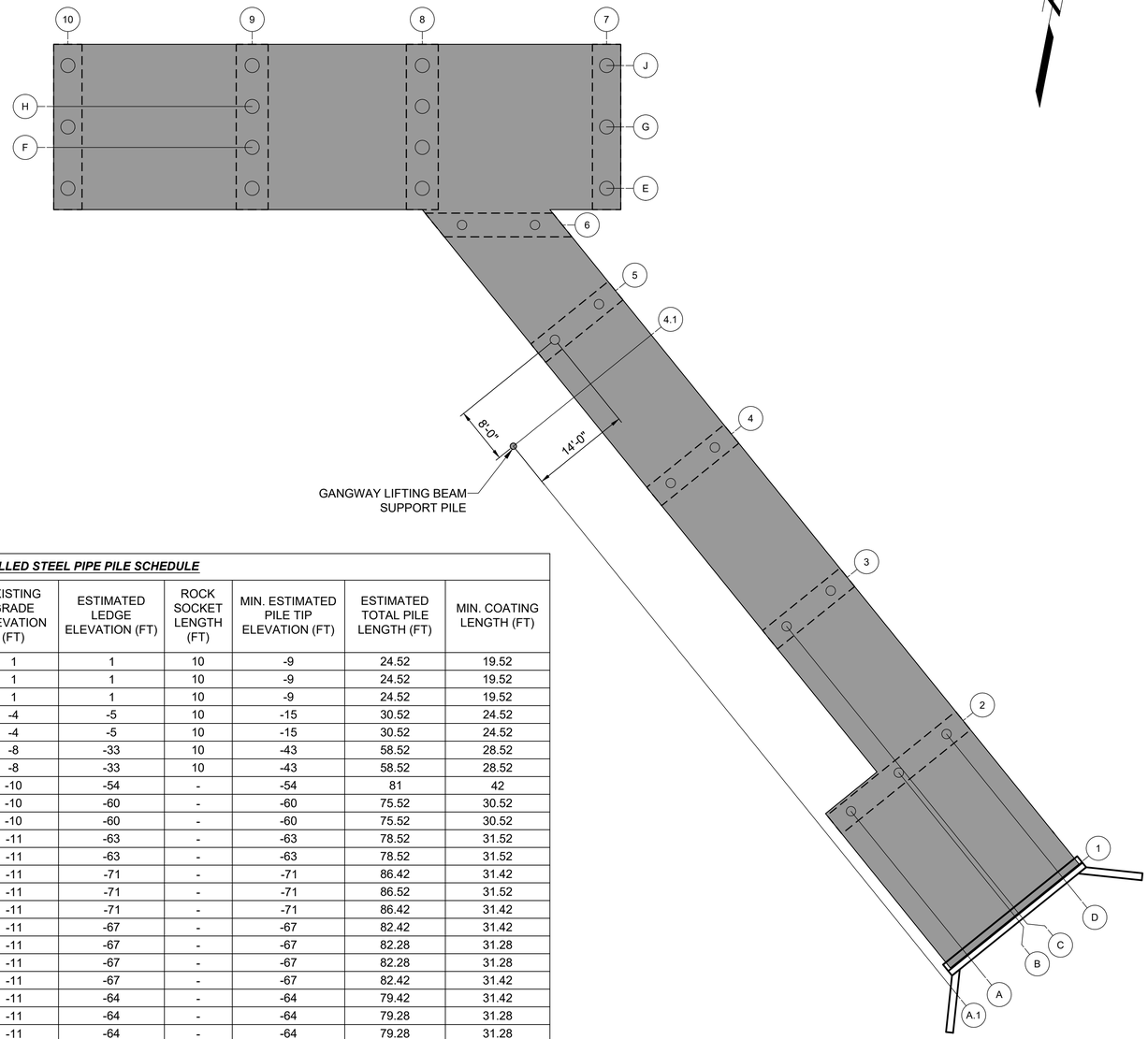

DETAIL
MAIN PIER SCALE: 1" = 10"

CONCRETE FILLED STEEL PIPE PILE SCHEDULE

PILE DESIGNATION	PILE SIZE (INCHES)	BATTER	CUTOFF ELEVATION (FT)	EXISTING GRADE ELEVATION (FT)	ESTIMATED LEDGE ELEVATION (FT)	ROCK SOCKET LENGTH (FT)	MIN. ESTIMATED PILE TIP ELEVATION (FT)	ESTIMATED TOTAL PILE LENGTH (FT)	MIN. COATING LENGTH (FT)
2A	16x5/8	VERTICAL	15.52	1	1	10	-9	24.52	19.52
2B	16x5/8	VERTICAL	15.52	1	1	10	-9	24.52	19.52
2D	16x5/8	VERTICAL	15.52	1	1	10	-9	24.52	19.52
3C	16x5/8	VERTICAL	15.52	-4	-5	10	-15	30.52	24.52
3D	16x5/8	VERTICAL	15.52	-4	-5	10	-15	30.52	24.52
4C	16x5/8	VERTICAL	15.52	-8	-33	10	-43	58.52	28.52
4D	16x5/8	VERTICAL	15.52	-8	-33	10	-43	58.52	28.52
4.1-A.1	10.75x5/8	VERTICAL	27	-10	-54	-	-54	81	42
5C	16x5/8	VERTICAL	15.52	-10	-60	-	-60	75.52	30.52
5D	16x5/8	VERTICAL	15.52	-10	-60	-	-60	75.52	30.52
6C	16x5/8	VERTICAL	15.52	-11	-63	-	-63	78.52	31.52
6D	16x5/8	VERTICAL	15.52	-11	-63	-	-63	78.52	31.52
7E	24x5/8	3:12	15.42	-11	-71	-	-71	86.42	31.42
7G	24x5/8	VERTICAL	15.52	-11	-71	-	-71	86.52	31.52
7J	24x5/8	3:12	15.42	-11	-71	-	-71	86.42	31.42
8E	24x5/8	3:12	15.42	-11	-67	-	-67	82.42	31.42
8F	24x5/8	3:12	15.28	-11	-67	-	-67	82.28	31.28
8H	24x5/8	3:12	15.28	-11	-67	-	-67	82.28	31.28
8J	24x5/8	3:12	15.42	-11	-67	-	-67	82.42	31.42
9E	24x5/8	3:12	15.42	-11	-64	-	-64	79.42	31.42
9F	24x5/8	3:12	15.28	-11	-64	-	-64	79.28	31.28
9H	24x5/8	3:12	15.28	-11	-64	-	-64	79.28	31.28
9J	24x5/8	3:12	15.42	-11	-64	-	-64	79.42	31.42
10E	24x5/8	3:12	15.42	-11	-66	-	-66	81.42	31.42
10G	24x5/8	VERTICAL	15.52	-11	-66	-	-66	81.52	31.52
10J	24x5/8	3:12	15.42	-11	-66	-	-66	81.42	31.42
							TOTAL	1821.5	

SCHEDULE NOTES
1. ALL ELEVATIONS REFERENCED IN TABLE ARE IN NAVD88 DATUM.

0 10 20
SCALE, FEET

0 1 2 4
SCALE, FEET

ELEVATION	MLLW	NAVD88*
BFE	+19.0	+14.0
HAT	+11.6	+6.6
MHHW	+9.7	+4.7
MHW	+9.3	+4.3
MSL	+4.8	-0.2
MLW	+0.3	-4.7
MLLW	0.0	-5.0

*PROJECT DATUM

FOR PERMIT

Attention:
0 1"
If this scale bar does not measure 1" then drawing is not original scale.

STATE OF MAINE
DANIEL J. BANNON
No. 13033
LICENSED PROFESSIONAL ENGINEER
4/16/2025

Designed:	DJB
Drawn:	JAM
Checked:	BJB
Approved:	BMM
P.E. No:	13033
GEI Project	2203703

GEI Consultants
GEI CONSULTANTS, INC.
5 MILK STREET
PORTLAND, ME 04101
(207)797-8901

UNIVERSITY OF NEW ENGLAND
11 HILLS BEACH RD.
BIDDEFORD, MAINE

UNIVERSITY OF NEW ENGLAND MARINE SCIENCE CENTER PIER
11 HILLS BEACH ROAD
BIDDEFORD, YORK COUNTY, MAINE

NO	DATE	ISSUE/REVISION	APP
7	4/16/2025	BIDDEFORD PERMIT APP.	DJB
6	9/17/2024	REVISED PERMIT SET	DJB
5	6/27/2024	REVISED PERMIT SET	DJB
4	9/14/2023	DEP PERMIT SET	DJB
3	6/28/2023	75% DESIGN SUBMISSION	DJB
2	2/15/2023	30% DESIGN SUBMISSION	DJB
1	12/9/2022	15% DESIGN SUB REV	DJB
0	11/11/2022	15% DESIGN SUBMISSION	DJB

SHEET NAME: **PILE PLAN**

SHEET NO.: **S-005**

BANNON, DAN \\gisconsultants.com\data\Data_Storage\Working\UNIVERSITY OF NEW ENGLAND\2203703 UNE Marine Science Center Pier\00_CAD\Design\Sheets\2203703-S-005.dwg - 4/16/2025

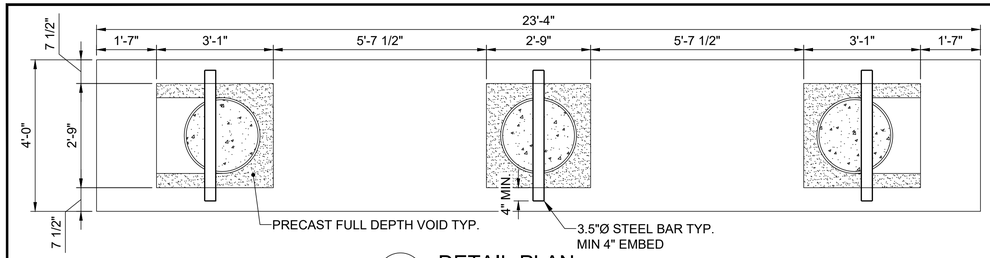

1 DETAIL-PLAN
MAIN PIER
BENT 7 & 10
SCALE: 1" = 2'

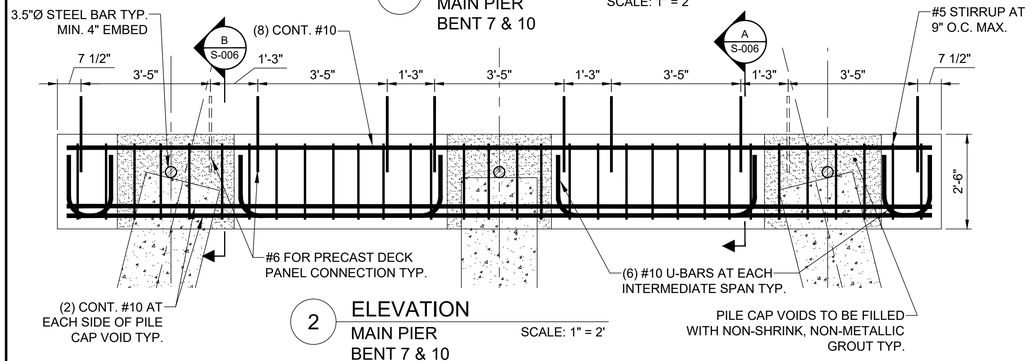

2 ELEVATION
MAIN PIER
BENT 7 & 10
SCALE: 1" = 2'

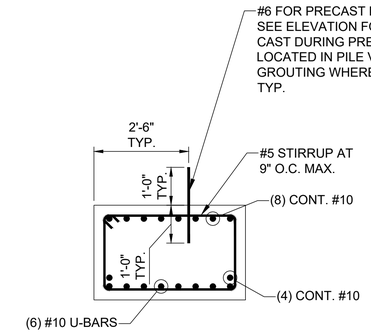

A SECTION
MAIN PIER
BENT 7 & 10
SCALE: 1" = 2'

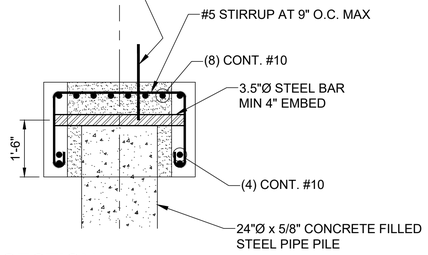

B SECTION
MAIN PIER
BENT 7 & 10
SCALE: 1" = 2'

5 DETAIL
MAIN PIER
N.T.S.

3 DETAIL-PLAN
MAIN PIER
BENT 8 & 9
SCALE: 1" = 2'

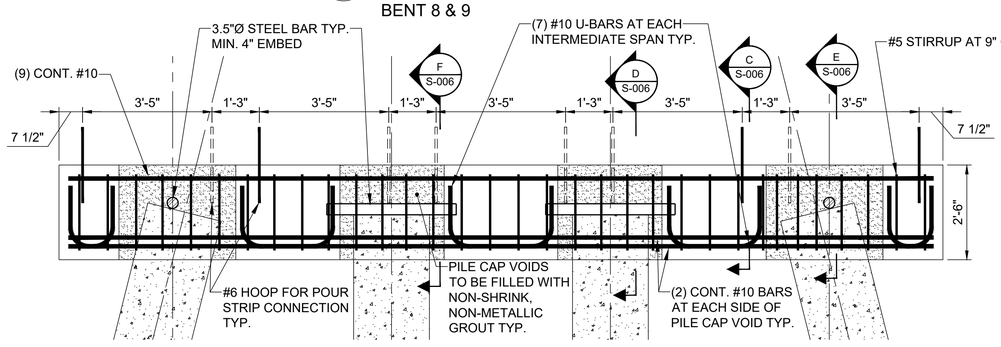

4 ELEVATION
MAIN PIER
BENT 8 & 9
SCALE: 1" = 2'

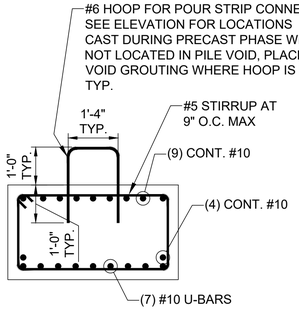

C SECTION
MAIN PIER
BENT 8 & 9
SCALE: 1" = 2'

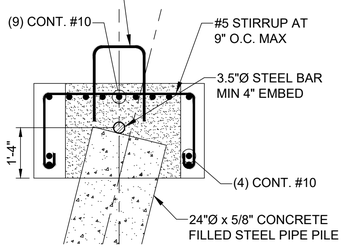

D SECTION
MAIN PIER
BENT 8 & 9
SCALE: 1" = 2'

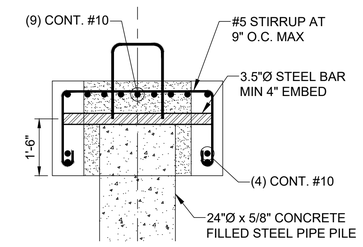

E SECTION
MAIN PIER
BENT 8 & 9
SCALE: 1" = 2'

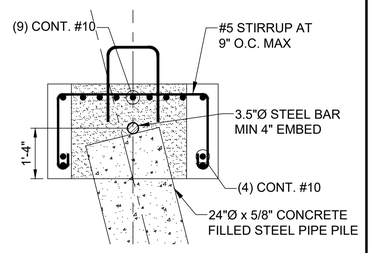

F SECTION
MAIN PIER
BENT 8 & 9
SCALE: 1" = 2'

FOR PERMIT

0 1 2 4
SCALE, FEET

ELEVATION	MLLW	NAVD88*
BFE	+19.0	+14.0
HAT	+11.6	+6.6
MHHW	+9.7	+4.7
MHW	+9.3	+4.3
MSL	+4.8	-0.2
MLW	+0.3	-4.7
MLLW	0.0	-5.0

*PROJECT DATUM

Attention:
0 1"
If this scale bar does not measure 1" then drawing is not original scale.

STATE OF MAINE
DANIEL J. BANNON
No. 13033
LICENSED PROFESSIONAL ENGINEER
4/16/2025

Designed:	DJB
Drawn:	JAM
Checked:	BJB
Approved:	BMM
P.E. No:	13033
GEI Project	2203703

GEI Consultants
GEI CONSULTANTS, INC.
5 MILK STREET
PORTLAND, ME 04101
(207)797-8901

UNE
UNIVERSITY OF NEW ENGLAND
11 HILLS BEACH RD.
BIDDEFORD, MAINE

UNIVERSITY OF NEW ENGLAND MARINE SCIENCE CENTER PIER
11 HILLS BEACH ROAD
BIDDEFORD, YORK COUNTY, MAINE

NO	DATE	ISSUE/REVISION	APP
7	4/16/2025	BIDDEFORD PERMIT APP.	DJB
6	9/17/2024	REVISED PERMIT SET	DJB
5	6/27/2024	REVISED PERMIT SET	DJB
4	9/14/2023	DEP PERMIT SET	DJB
3	6/28/2023	75% DESIGN SUBMISSION	DJB
2	2/15/2023	30% DESIGN SUBMISSION	DJB
1	12/9/2022	15% DESIGN SUB REV	DJB
0	11/11/2022	15% DESIGN SUBMISSION	DJB

SHEET NAME
PRECAST PILE CAP PLAN AND SECTIONS 1 OF 2

SHEET NO.
S-006

BANNON, DAN \\gisconsultants.com\data\Data_Storage\Working\UNIVERSITY OF NEW ENGLAND\2203703 UNE Marine Science Center Pier\00_CAD\Design\Sheets\2203703-S-006.dwg - 4/16/2025

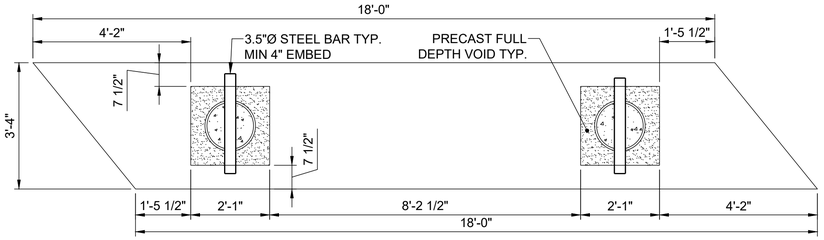

1 DETAIL-PLAN
APPROACH PIER
BENT 6
SCALE: 1" = 2'

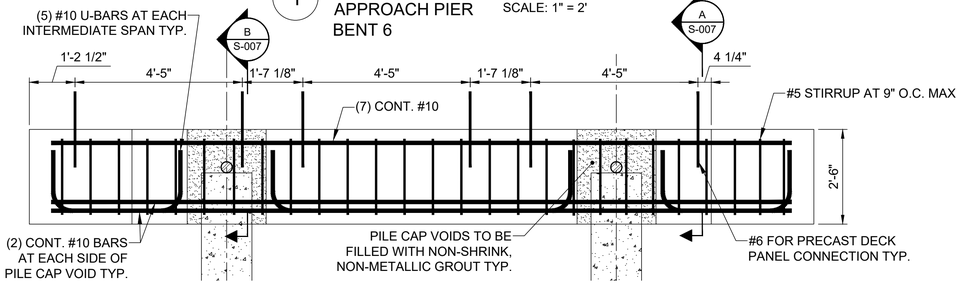

2 ELEVATION
APPROACH PIER
BENT 6
SCALE: 1" = 2'

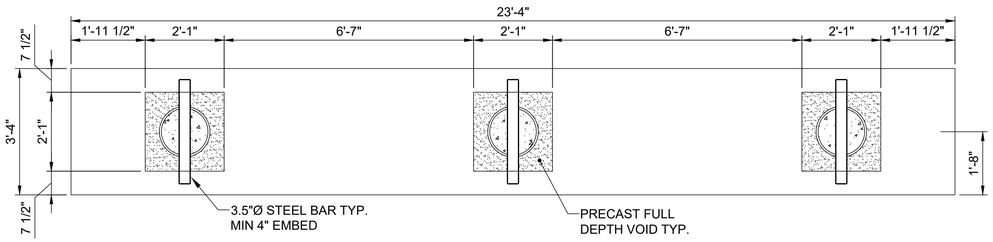

3 DETAIL-PLAN
APPROACH PIER
BENT 2
SCALE: 1" = 2'

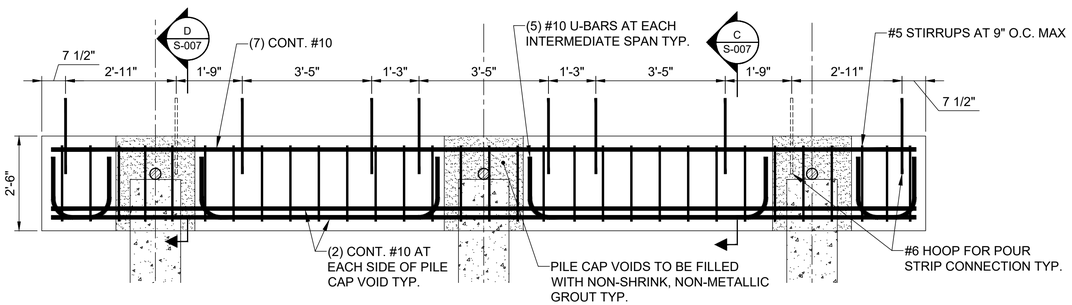

4 ELEVATION
APPROACH PIER
BENT 2
SCALE: 1" = 2'

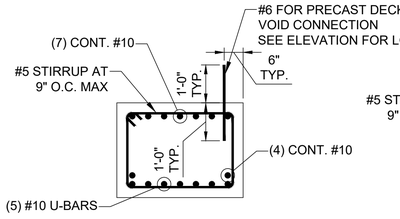

A SECTION
APPROACH PIER
BENT 6
SCALE: 1" = 2'

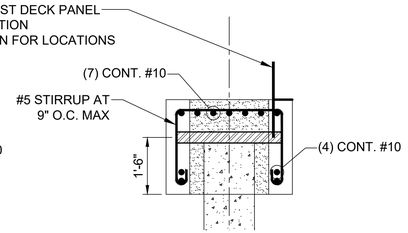

B SECTION
APPROACH PIER
BENT 6
SCALE: 1" = 2'

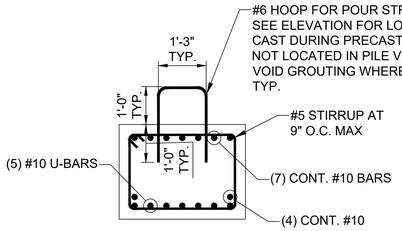

C SECTION
APPROACH PIER
BENTS 2-5
SCALE: 1" = 2'

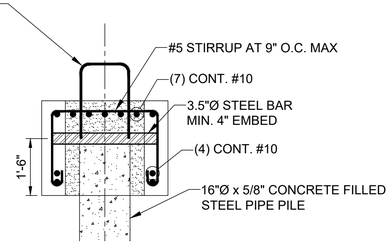

D SECTION
APPROACH PIER
BENTS 2-5
SCALE: 1" = 2'

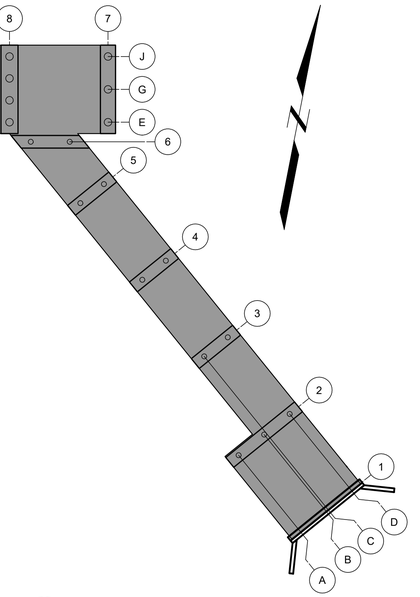

7 DETAIL
MAIN PIER
N.T.S.

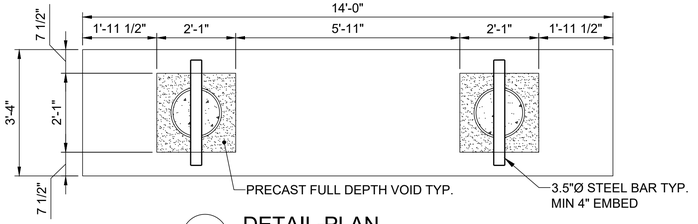

5 DETAIL-PLAN
APPROACH PIER
BENTS 3-5
SCALE: 1" = 2'

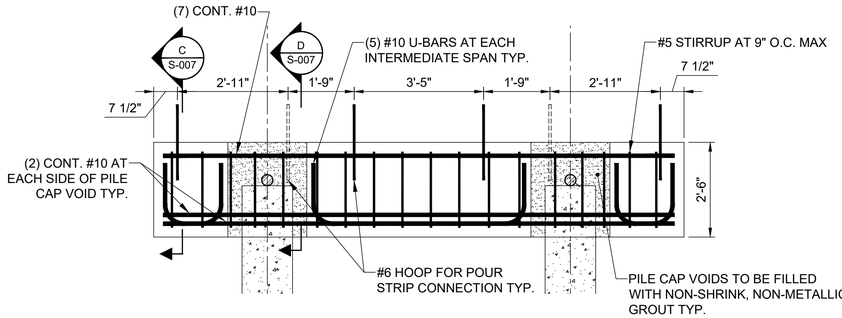

6 ELEVATION
APPROACH PIER
BENTS 3-5
SCALE: 1" = 2'

FOR PERMIT

0 1 2 4
SCALE, FEET

ELEVATION	MLLW	NAVD88*
BFE	+19.0	+14.0
HAT	+11.6	+6.6
MHHW	+9.7	+4.7
MHW	+9.3	+4.3
MSL	+4.8	-0.2
MLW	+0.3	-4.7
MLLW	0.0	-5.0

*PROJECT DATUM

Attention:
0 1"
If this scale bar does not measure 1" then drawing is not original scale.

STATE OF MAINE
DANIEL J. BANNON
No. 13033
LICENSED PROFESSIONAL ENGINEER
4/16/2025

Designed:	DJB
Drawn:	JAM
Checked:	BJB
Approved:	BMM
P.E. No:	13033
GEI Project	2203703

GEI Consultants
GEI CONSULTANTS, INC.
5 MILK STREET
PORTLAND, ME 04101
(207)797-8901

UNE
UNIVERSITY OF NEW ENGLAND
11 HILLS BEACH RD.
BIDDEFORD, MAINE

UNIVERSITY OF NEW ENGLAND
MARINE SCIENCE CENTER PIER
11 HILLS BEACH ROAD
BIDDEFORD, YORK COUNTY, MAINE

NO	DATE	ISSUE/REVISION	APP
7	4/16/2025	BIDDEFORD PERMIT APP.	DJB
6	9/17/2024	REVISED PERMIT SET	DJB
5	6/27/2024	REVISED PERMIT SET	DJB
4	9/14/2023	DEP PERMIT SET	DJB
3	6/28/2023	75% DESIGN SUBMISSION	DJB
2	2/15/2023	30% DESIGN SUBMISSION	DJB
1	12/9/2022	15% DESIGN SUB REV	DJB
0	11/11/2022	15% DESIGN SUBMISSION	DJB

SHEET NAME
PRECAST PILE CAP PLAN AND SECTIONS 2 OF 2

SHEET NO.
S-007

BANNON, DAN \\oos1v-fil202\Data_Storage\Working\UNIVERSITY OF NEW ENGLAND\2203703 UNE Marine Science Center Pier\00_CAD\Design\Sheets\2203703-S-007.dwg - 4/16/2025

PRECAST DECK PANEL SCHEDULE					
PANEL ID	A	B	C	D	QTY.
A	4'-8"	25'-2"	-	-	5
B	4'-8"	24'-3"	-	-	9
C	4'-8"	-	13'-3"	17'-0"	1
D	4'-8"	-	17'-0"	20'-9 1/2"	1
E	4'-8"	-	20'-9 1/2"	24'-7"	1
F	4'-8"	26'-0"	-	-	10
G	4'-8"	22'-0"	-	-	5

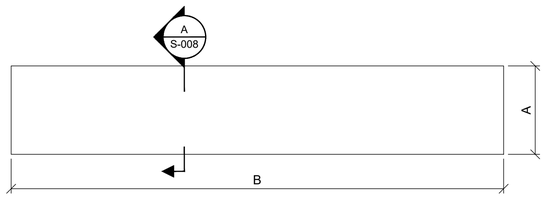

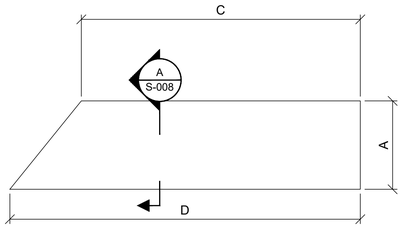

1 DETAIL-PLAN
PRECAST DECK PANEL SCALE: 1"=4'

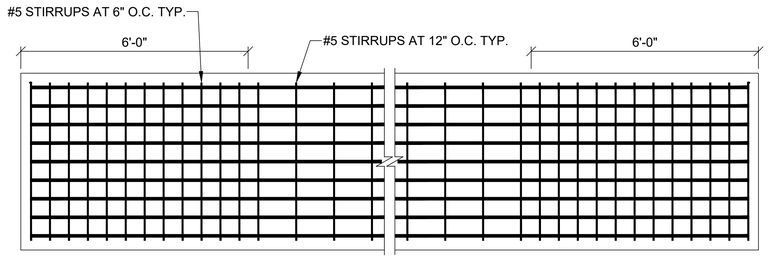

3 DETAIL-PLAN PLANKS A, B, F, & G
PRECAST DECK PANEL
STIRRUP SPACING SCALE: 1"=2'

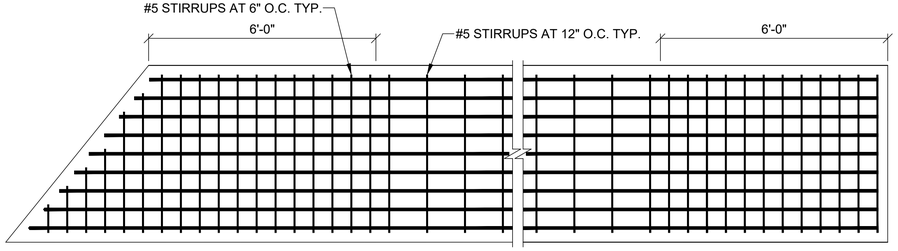

4 DETAIL-PLAN PLANKS C, D, & E
PRECAST DECK PANEL
STIRRUP SPACING SCALE: 1"=2'

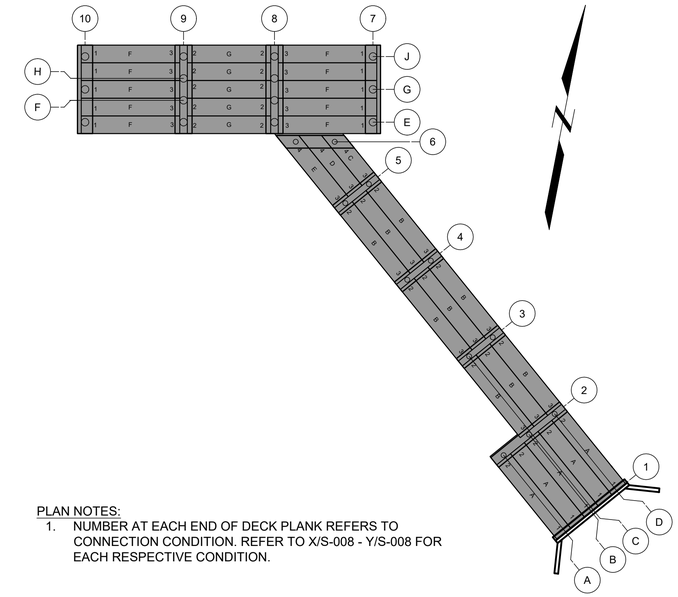

PLAN NOTES:
1. NUMBER AT EACH END OF DECK PLANK REFERS TO CONNECTION CONDITION. REFER TO X/S-008 - Y/S-008 FOR EACH RESPECTIVE CONDITION.

9 DETAIL
PIER DECK PANELS N.T.S.

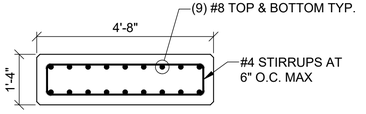

A SECTION
PRECAST DECK PANEL SCALE: 1"=2'

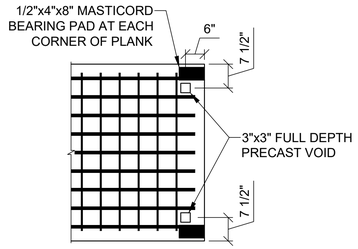

5 DETAIL - PLAN
DECK PANEL
CONNECTION 1 SCALE: 1"=2'

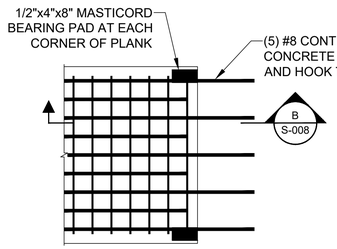

6 DETAIL - PLAN
DECK PANEL
CONNECTION 2 SCALE: 1"=2'

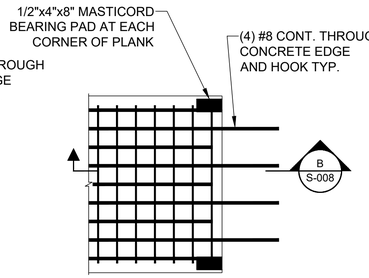

7 DETAIL - PLAN
DECK PANEL
CONNECTION 3 SCALE: 1"=2'

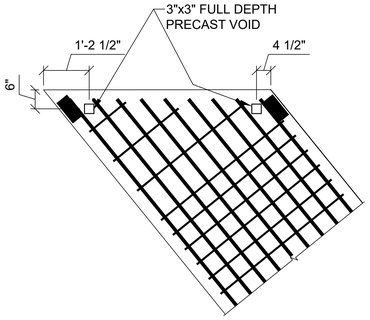

8 DETAIL - PLAN
DECK PANEL
CONNECTION 1 SCALE: 1"=2'

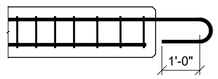

B SECTION
PRECAST DECK PANEL
CONNECTION END 2 & 3 SCALE: 1"=2'

0 10 20
SCALE, FEET

0 1 2 4
SCALE, FEET

ELEVATION	MLLW	NAVD88*
BFE	+19.0	+14.0
HAT	+11.6	+6.6
MHHW	+9.7	+4.7
MHW	+9.3	+4.3
MSL	+4.8	-0.2
MLW	+0.3	-4.7
MLLW	0.0	-5.0

*PROJECT DATUM

FOR PERMIT

Attention:
0 1"
If this scale bar does not measure 1" then drawing is not original scale.

STATE OF MAINE
DANIEL J. BANNON
No. 13033
LICENSED PROFESSIONAL ENGINEER
4/16/2025

Designed:	DJB
Drawn:	JAM
Checked:	BJB
Approved:	BMM
P.E. No:	13033
GEI Project	2203703

GEI Consultants
GEI CONSULTANTS, INC.
5 MILK STREET
PORTLAND, ME 04101
(207)797-8901

UNE
UNIVERSITY OF NEW ENGLAND
11 HILLS BEACH RD.
BIDDEFORD, MAINE

UNIVERSITY OF NEW ENGLAND MARINE SCIENCE CENTER PIER
11 HILLS BEACH ROAD
BIDDEFORD, YORK COUNTY, MAINE

NO	DATE	ISSUE/REVISION	APP
7	4/16/2025	BIDDEFORD PERMIT APP.	DJB
6	9/17/2024	REVISED PERMIT SET	DJB
5	6/27/2024	REVISED PERMIT SET	DJB
4	9/14/2023	DEP PERMIT SET	DJB
3	6/28/2023	75% DESIGN SUBMISSION	DJB
2	2/15/2023	30% DESIGN SUBMISSION	DJB
1	12/9/2022	15% DESIGN SUB REV	DJB
0	11/11/2022	15% DESIGN SUBMISSION	DJB

SHEET NAME
PRECAST DECK PANEL PLAN

SHEET NO.
S-008

BANNON, DAN \\bss1v-fs02\Data_Storage\Working\UNIVERSITY OF NEW ENGLAND\2203703 UNE Marine Science Center Pier\00_CAD\DesignSheets\2203703-S-008.dwg - 4/16/2025

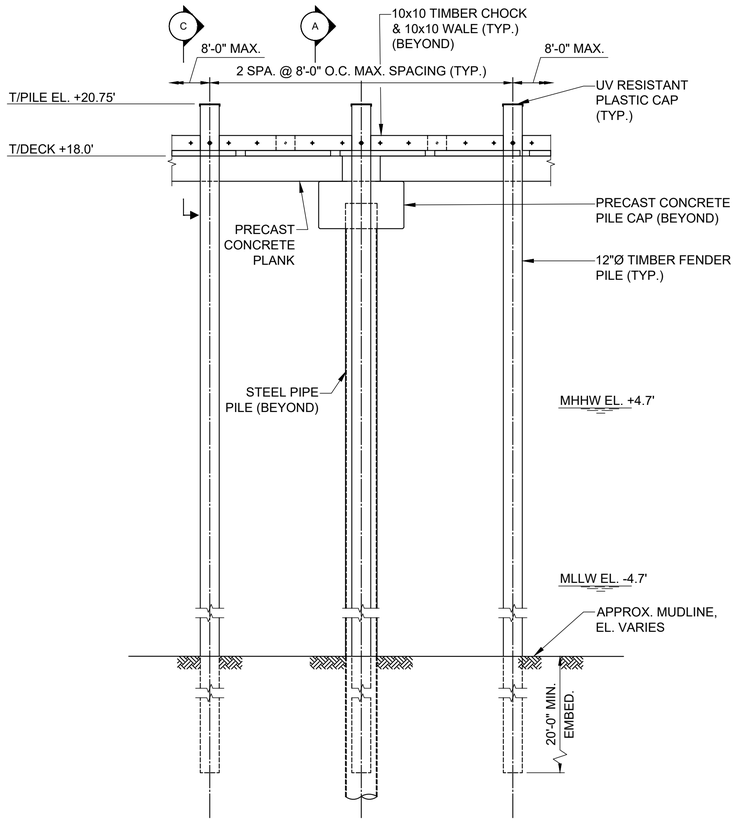

TIMBER FENDER DETAIL

SCALE: 1/4" = 1'-0"

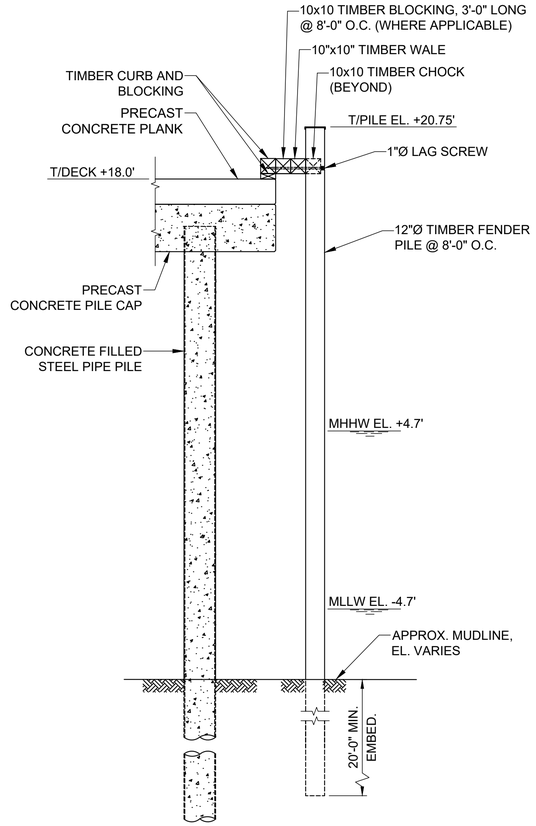

A TIMBER FENDER SECTION

SCALE: 1/4" = 1'-0"

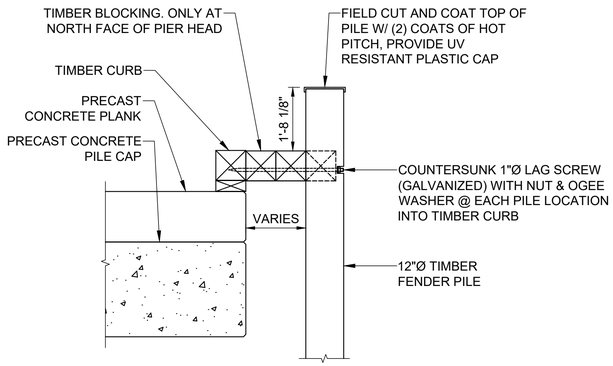

C FENDER PILE CONNECTION

SCALE: 1/2" = 1'-0"

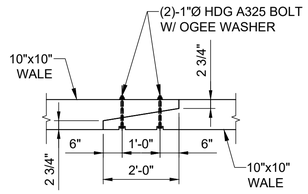

D WALE SPLICE DETAIL

SCALE: 1/2" = 1'-0"

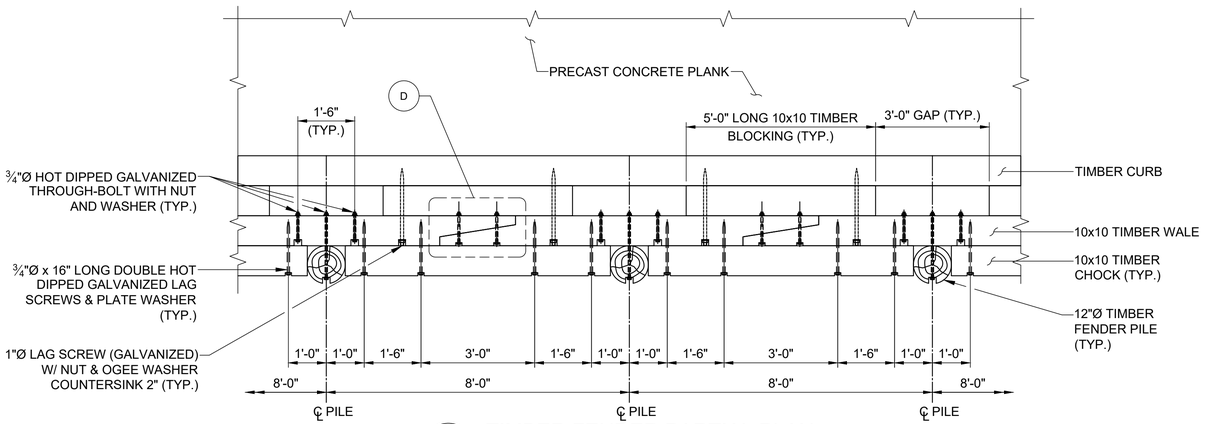

B TIMBER FENDER PARTIAL PLAN

SCALE: 1/2" = 1'-0"

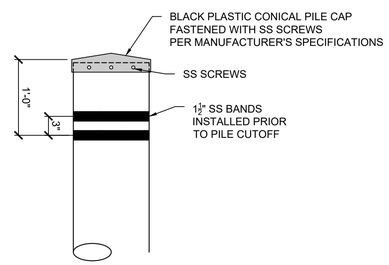

E PILE BANDING DETAIL

SCALE: 1" = 1'-0"

FOR PERMIT

ELEVATION	MLLW	NAVD88*
BFE	+19.0	+14.0
HAT	+11.6	+6.6
MHHW	+9.7	+4.7
MHW	+9.3	+4.3
MSL	+4.8	-0.2
MLW	+0.3	-4.7
MLLW	0.0	-5.0

*PROJECT DATUM

Attention:
0 1"
If this scale bar does not measure 1" then drawing is not original scale.

STATE OF MAINE · DANIEL J. BANNON No. 13033 · LICENSED PROFESSIONAL ENGINEER · 4/16/2025

Designed:	DJB
Drawn:	JAM
Checked:	BJB
Approved:	BMM
P.E. No:	13033
GEI Project	2203703

GEI Consultants
GEI CONSULTANTS, INC.
5 MILK STREET
PORTLAND, ME 04101
(207)797-8901

UNE
UNIVERSITY OF NEW ENGLAND
11 HILLS BEACH RD.
BIDDEFORD, MAINE

UNIVERSITY OF NEW ENGLAND MARINE SCIENCE CENTER PIER
11 HILLS BEACH ROAD
BIDDEFORD, YORK COUNTY, MAINE

NO	DATE	ISSUE/REVISION	APP
7	4/16/2025	BIDDEFORD PERMIT APP.	DJB
6	9/17/2024	REVISED PERMIT SET	DJB
5	6/27/2024	REVISED PERMIT SET	DJB
4	9/14/2023	DEP PERMIT SET	DJB
3	6/28/2023	75% DESIGN SUBMISSION	DJB
2	2/15/2023	30% DESIGN SUBMISSION	DJB
1	12/9/2022	15% DESIGN SUB REV	DJB
0	11/11/2022	15% DESIGN SUBMISSION	DJB

SHEET NAME
MISCELLANEOUS DETAILS (1 OF 5)

SHEET NO.
S-009

BANNON, DAN \\bos1v-fs02\Data_Storage\Working\UNIVERSITY OF NEW ENGLAND\2203703 UNE Marine Science Center Pier\00_CAD\Design\Sheets\2203703-S-009.dwg - 4/16/2025

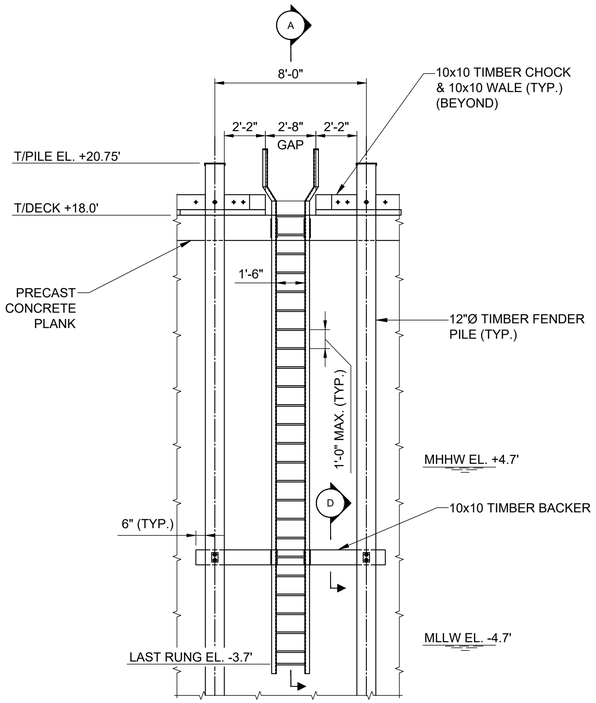

LADDER DETAIL

SCALE: 1/4" = 1'-0"

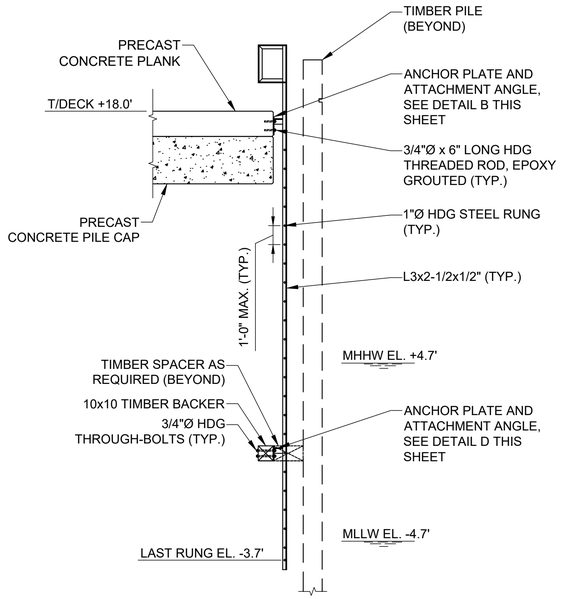

A LADDER SECTION

SCALE: 1/4" = 1'-0"

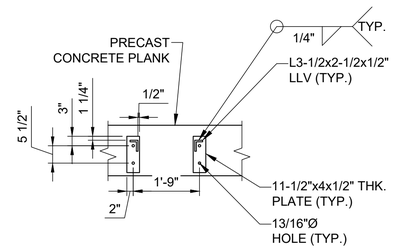

B LADDER CONNECTION (TOP)

SCALE: 1/2" = 1'-0"

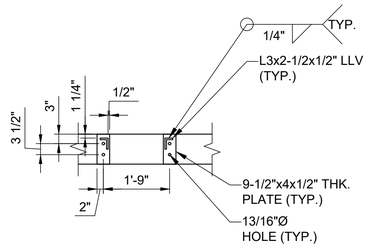

C LADDER CONNECTION (BOTTOM)

SCALE: 1/2" = 1'-0"

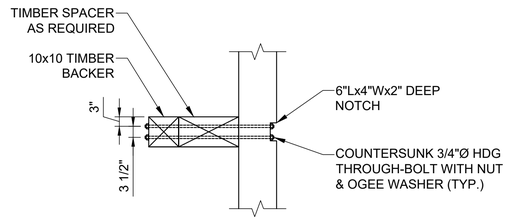

D TIMBER BACKER CONNECTION

SCALE: 1/2" = 1'-0"

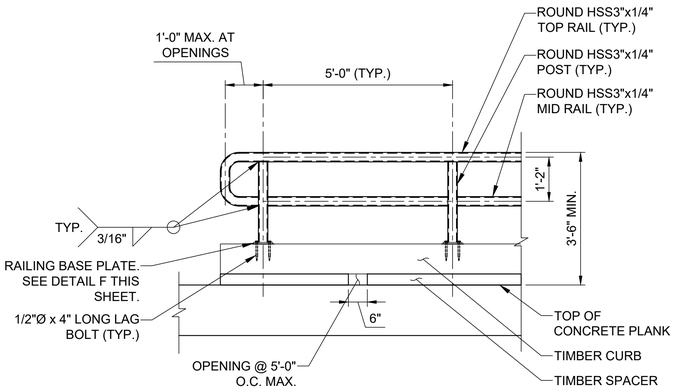

E RAILING SECTION

SCALE: 1/2" = 1'-0"

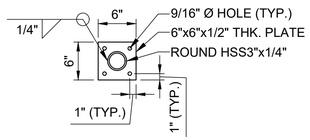

F RAILING BASEPLATE DETAIL

SCALE: 1" = 1'-0"

ELEVATION	MLLW	NAVD88*
BFE	+19.0	+14.0
HAT	+11.6	+6.6
MHHW	+9.7	+4.7
MHW	+9.3	+4.3
MSL	+4.8	-0.2
MLW	+0.3	-4.7
MLLW	0.0	-5.0

*PROJECT DATUM

FOR PERMIT

Attention:

0 1"

If this scale bar does not measure 1" then drawing is not original scale.

STATE OF MAINE
DANIEL J. BANNON
No. 13033
LICENSED PROFESSIONAL ENGINEER
4/16/2025

Designed:	DJB
Drawn:	JAM
Checked:	BJB
Approved:	BMM
P.E. No:	13033
GEI Project	2203703

GEI Consultants
GEI CONSULTANTS, INC.
5 MILK STREET
PORTLAND, ME 04101
(207)797-8901

UNE
UNIVERSITY OF NEW ENGLAND
11 HILLS BEACH RD.
BIDDEFORD, MAINE

UNIVERSITY OF NEW ENGLAND MARINE SCIENCE CENTER PIER
11 HILLS BEACH ROAD
BIDDEFORD, YORK COUNTY, MAINE

NO	DATE	ISSUE/REVISION	APP
7	4/16/2025	BIDDEFORD PERMIT APP.	DJB
6	9/17/2024	REVISED PERMIT SET	DJB
5	6/27/2024	REVISED PERMIT SET	DJB
4	9/14/2023	DEP PERMIT SET	DJB
3	6/28/2023	75% DESIGN SUBMISSION	DJB
2	2/15/2023	30% DESIGN SUBMISSION	DJB
1	12/9/2022	15% DESIGN SUB REV	DJB
0	11/11/2022	15% DESIGN SUBMISSION	DJB

SHEET NAME

MISCELLANEOUS DETAILS (2 OF 5)

SHEET NO.

S-010

BANNON, DAN \\bos1v-fs02\data_Storage\Working\UNIVERSITY OF NEW ENGLAND\2203703 UNE Marine Science Center Pier\00_CAD\Design\Sheets\2203703-S-010.dwg - 4/16/2025

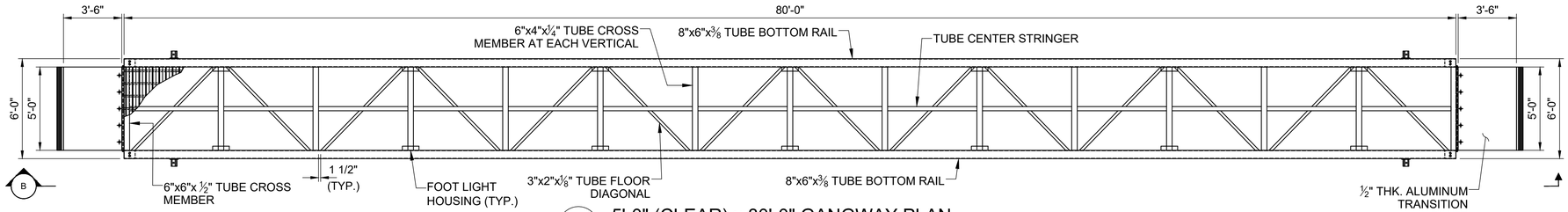

A 5'-0" (CLEAR) x 80'-0" GANGWAY PLAN

SCALE: 1/4" = 1'-0"

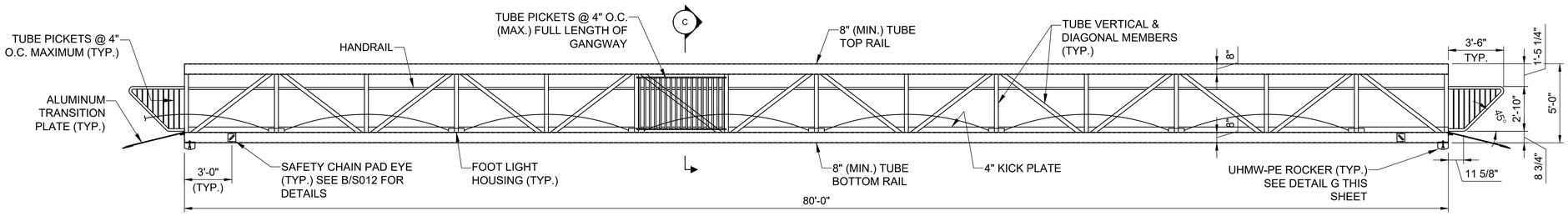

B GANGWAY ELEVATION

SCALE: 1/4" = 1'-0"

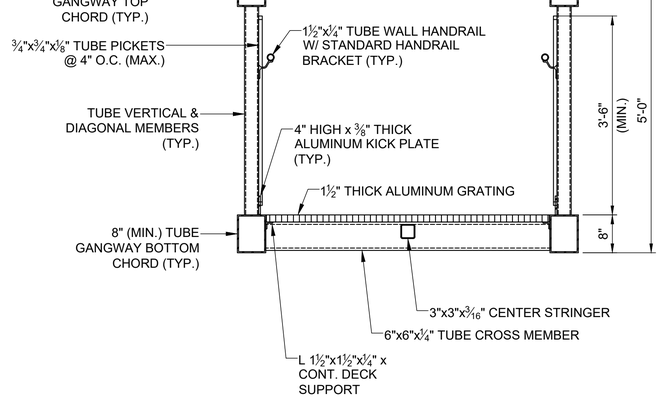

C TYPICAL GANGWAY SECTION

SCALE: 3/4" = 1'-0"

NOTE(S):
1. CONTRACTOR AND GANGWAY MANUFACTURER SHALL DETERMINE FINAL GANGWAY MEMBER SIZES AND SUBMIT TO ENGINEER FOR REVIEW AND APPROVAL.
2. ALUMINUM GRATING SHALL MEET ADA REQUIREMENTS.

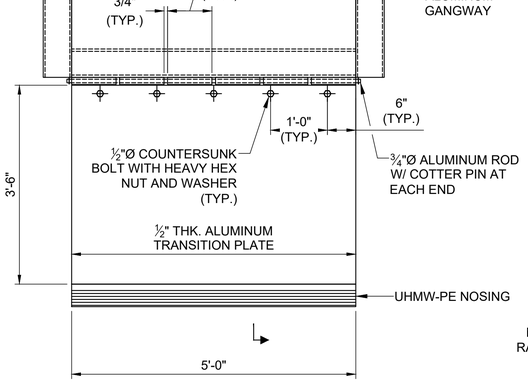

D TRANSITION PLATE DETAIL

SCALE: 3/4" = 1'-0"

NOTES:
1. CONTRACTOR SHALL DETERMINE FINAL GANGWAY MEMBER SIZES. MEMBERS ONLY SHOWN SCHEMATICALLY FOR REFERENCE.
2. CONTRACTOR SHALL SUBMIT FINAL GANGWAY SHOP DRAWINGS AND CALCULATION PACKAGE SIGNED AND SEALED BY A PROFESSIONAL ENGINEER LICENSED IN THE STATE OF MAINE.
3. ALL GANGWAY TUBE MEMBERS SHALL BE 6061-T6 ALUMINUM.
4. ALL GANGWAY TUBE MEMBERS SHALL BE CAPPED AND SEALED W/ ALUMINUM PLATES AT EXPOSED ENDS.

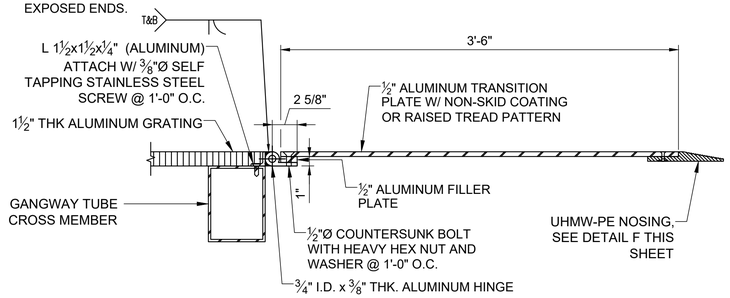

E GANGWAY TRANSITION PLATE SECTION

SCALE: 1-1/2" = 1'-0"

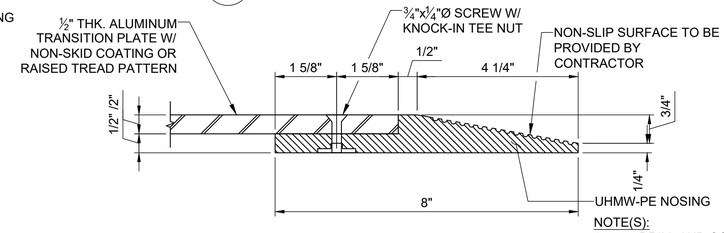

F UHMW-PE NOSING DETAIL

SCALE: 6" = 1'-0"

NOTE(S):
1. DRILL AND COUNTER BORE TRANSITION PLATES. COUNTERSINK HOLES FOR TEE NUTS TO TWICE BASE THICKNESS. SCREWS TO BE COUNTERSUNK INTO PLATE. INSTALL NEW SCREWS OVER SILICONE TO COVER EXPOSED ALUMINUM.
2. UHMW-PE NOSING DETAILS TO BE DETERMINED AFTER TRANSITION PLATE INSTALLATION AND SHALL BE IN COMPLIANCE WITH THE REQUIREMENTS SET FORTH IN ADA.

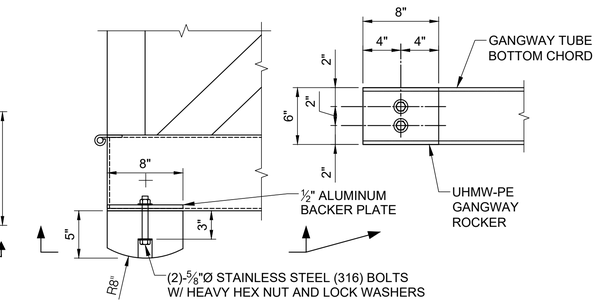

G GANGWAY ROCKER DETAIL

SCALE: 1-1/2" = 1'-0"

NOTES:
1. ROCKER MATERIAL SHALL BE VIRGIN UHMW-PE, BLACK IN COLOR.
2. ALUMINUM BACKER PLATE PLAN DIMENSIONS SHALL MATCH ROCKER PLAN DIMENSIONS.

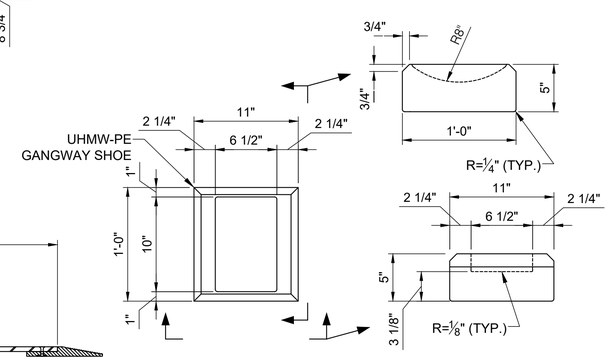

J GANGWAY SHOE DETAIL

SCALE: 1-1/2" = 1'-0"

NOTE: SHOE MATERIAL SHALL BE VIRGIN UHMW-PE, BLACK IN COLOR.

FOR PERMIT

ELEVATION	MLLW	NAVD88*
BFE	+19.0	+14.0
HAT	+11.6	+6.6
MHHW	+9.7	+4.7
MHW	+9.3	+4.3
MSL	+4.8	-0.2
MLW	+0.3	-4.7
MLLW	0.0	-5.0

*PROJECT DATUM

Attention:
0 1"
If this scale bar does not measure 1" then drawing is not original scale.

STATE OF MAINE — DANIEL J. BANNON No. 13033 — LICENSED PROFESSIONAL ENGINEER — 4/16/2025

Designed:	DJB
Drawn:	JAM
Checked:	BJB
Approved:	BMM
P.E. No:	13033
GEI Project	2203703

GEI Consultants
GEI CONSULTANTS, INC.
5 MILK STREET
PORTLAND, ME 04101
(207)797-8901

UNIVERSITY OF NEW ENGLAND
11 HILLS BEACH RD.
BIDDEFORD, MAINE

UNIVERSITY OF NEW ENGLAND MARINE SCIENCE CENTER PIER

11 HILLS BEACH ROAD
BIDDEFORD, YORK COUNTY, MAINE

NO	DATE	ISSUE/REVISION	APP
7	4/16/2025	BIDDEFORD PERMIT APP.	DJB
6	9/17/2024	REVISED PERMIT SET	DJB
5	6/27/2024	REVISED PERMIT SET	DJB
4	9/14/2023	DEP PERMIT SET	DJB
3	6/28/2023	75% DESIGN SUBMISSION	DJB
2	2/15/2023	30% DESIGN SUBMISSION	DJB
1	12/9/2022	15% DESIGN SUB REV	DJB
0	11/11/2022	15% DESIGN SUBMISSION	DJB

SHEET NAME: **MISCELLANEOUS DETAILS (3 OF 5)**

SHEET NO.: **S-011**

BANNON, DAN \\bos1v-fs02\data_Storage\Working\UNIVERSITY OF NEW ENGLAND\2203703 UNE Marine Science Center Pier\00_CAD\Design\Sheets\2203703-S-011.dwg - 4/16/2025

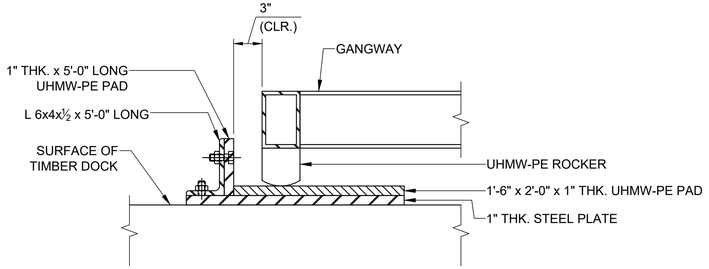

A GANGWAY LANDING AT DOCKS
SCALE: 1-1/2" = 1'-0"

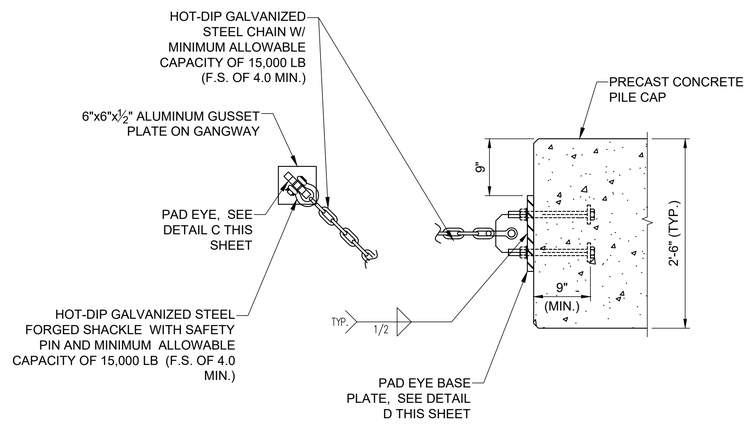

B SAFETY CHAIN ASSEMBLY
SCALE: 1" = 1'-0"

NOTE: CONTRACTOR TO DETERMINE ASSEMBLY LENGTH BASED ON PAD EYE LOCATION ON GANGWAY SUCH THAT UHMW-PE SHOE CANNOT MOVE OFF THE SUPPORTING PLATE.

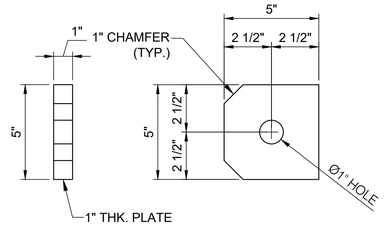

C PAD EYE DETAIL
SCALE: 3" = 1'-0"

NOTE: PAD EYE ON GANGWAY SHALL BE ALUMINUM. PAD EYE ON PILE CAP SHALL BE HDG STEEL.

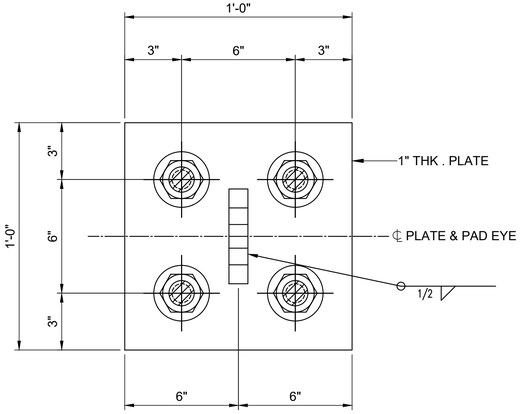

D PAD EYE BASE PLATE DETAIL
SCALE: 3" = 1'-0"

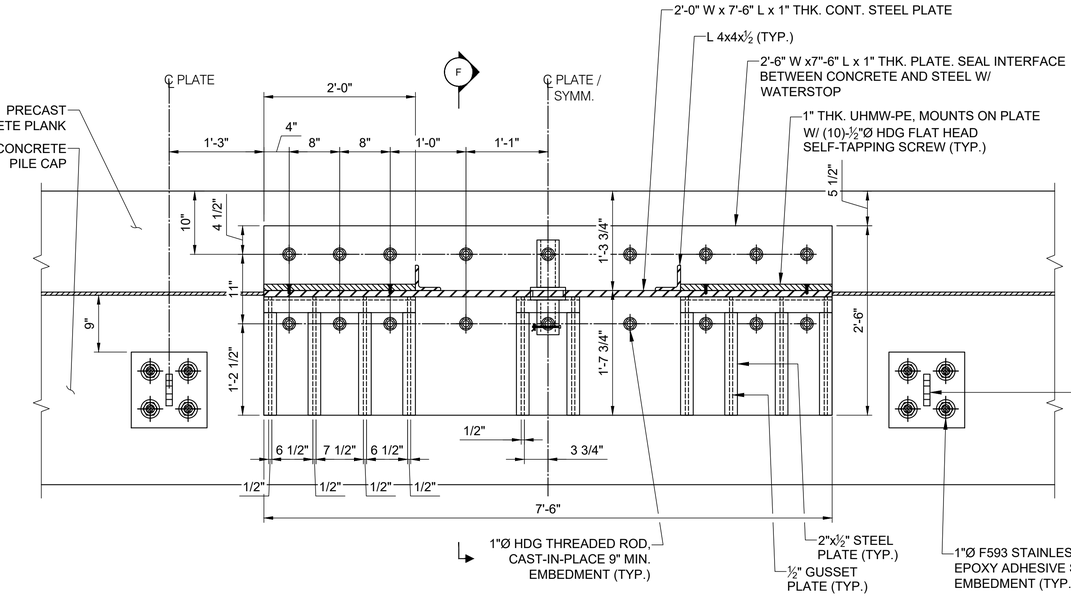

E FIFTH WHEEL ASSEMBLY - ELEVATION
SCALE: 1" = 1'-0"

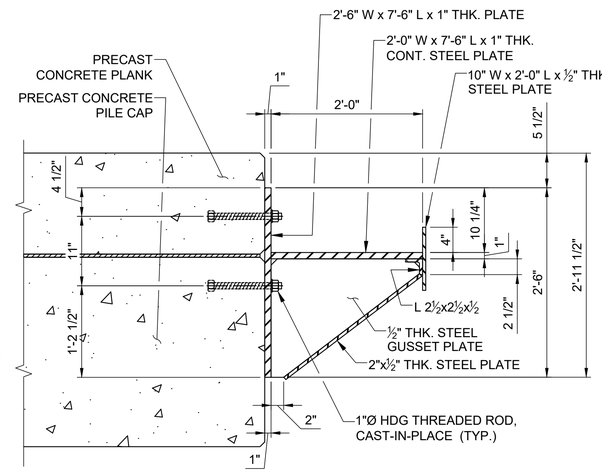

F FIFTH WHEEL ASSEMBLY - TYPICAL SECTION
SCALE: 1" = 1'-0"

ELEVATION	MLLW	NAVD88*
BFE	+19.0	+14.0
HAT	+11.6	+6.6
MHHW	+9.7	+4.7
MHW	+9.3	+4.3
MSL	+4.8	-0.2
MLW	+0.3	-4.7
MLLW	0.0	-5.0

*PROJECT DATUM

Attention:
0 1"
If this scale bar does not measure 1" then drawing is not original scale.

STATE OF MAINE
DANIEL J. BANNON
No. 13033
LICENSED PROFESSIONAL ENGINEER
4/16/2025

Designed:	DJB
Drawn:	JAM
Checked:	BJB
Approved:	BMM
P.E. No:	13033
GEI Project	2203703

GEI Consultants
GEI CONSULTANTS, INC.
5 MILK STREET
PORTLAND, ME 04101
(207)797-8901

UNE
UNIVERSITY OF NEW ENGLAND
11 HILLS BEACH RD.
BIDDEFORD, MAINE

UNIVERSITY OF NEW ENGLAND MARINE SCIENCE CENTER PIER
11 HILLS BEACH ROAD
BIDDEFORD, YORK COUNTY, MAINE

NO	DATE	ISSUE/REVISION	APP
7	4/16/2025	BIDDEFORD PERMIT APP.	DJB
6	9/17/2024	REVISED PERMIT SET	DJB
5	6/27/2024	REVISED PERMIT SET	DJB
4	9/14/2023	DEP PERMIT SET	DJB
3	6/28/2023	75% DESIGN SUBMISSION	DJB
2	2/15/2023	30% DESIGN SUBMISSION	DJB
1	12/9/2022	15% DESIGN SUB REV	DJB
0	11/11/2022	15% DESIGN SUBMISSION	DJB

SHEET NAME
MISCELLANEOUS DETAILS (4 OF 5)

SHEET NO.
S-012

FOR PERMIT

BANNON, DAN \\bos1v-fs02\Data_Storage\Working\UNIVERSITY OF NEW ENGLAND\2203703 UNE Marine Science Center Pier\00_CAD\Design\Sheets\2203703-S-012.dwg - 4/16/2025

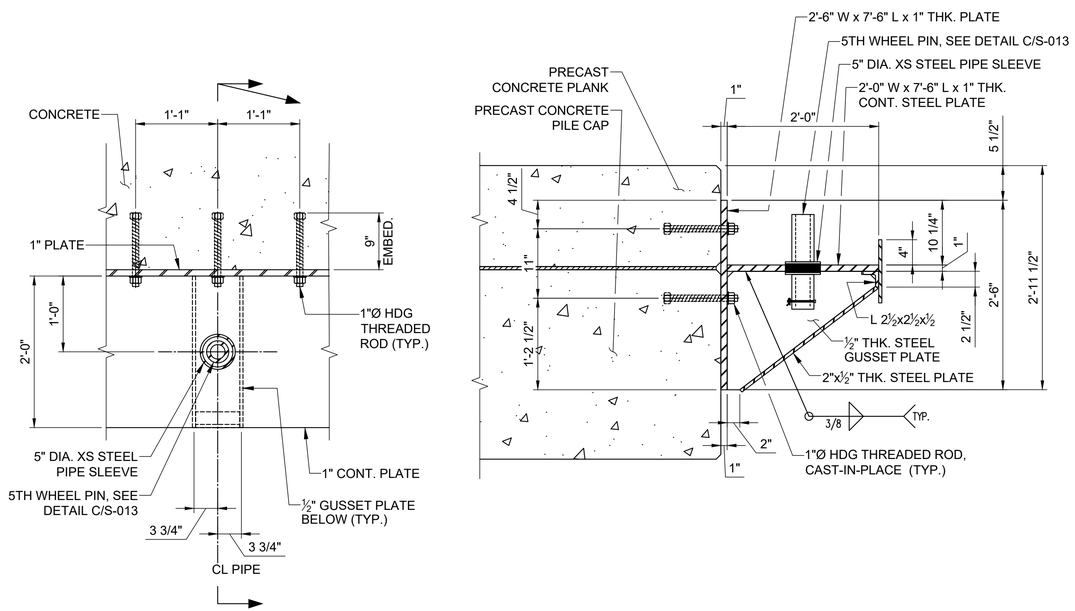

A TYPICAL 5TH WHEEL PLAN AND SECTION

SCALE: 1" = 1'-0"

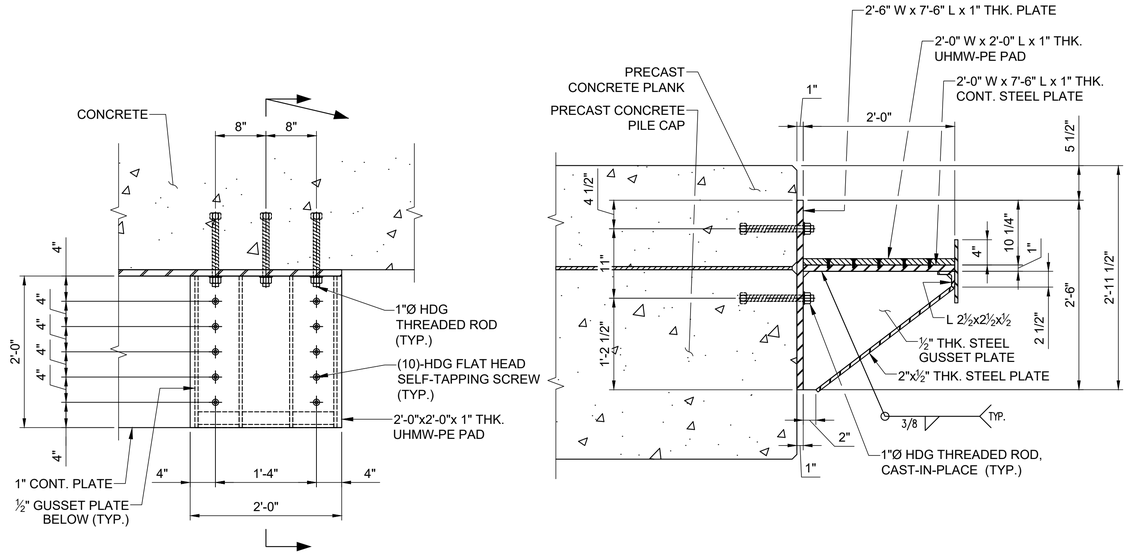

B TYPICAL UHMW-PE PAD DETAIL

SCALE: 1" = 1'-0"

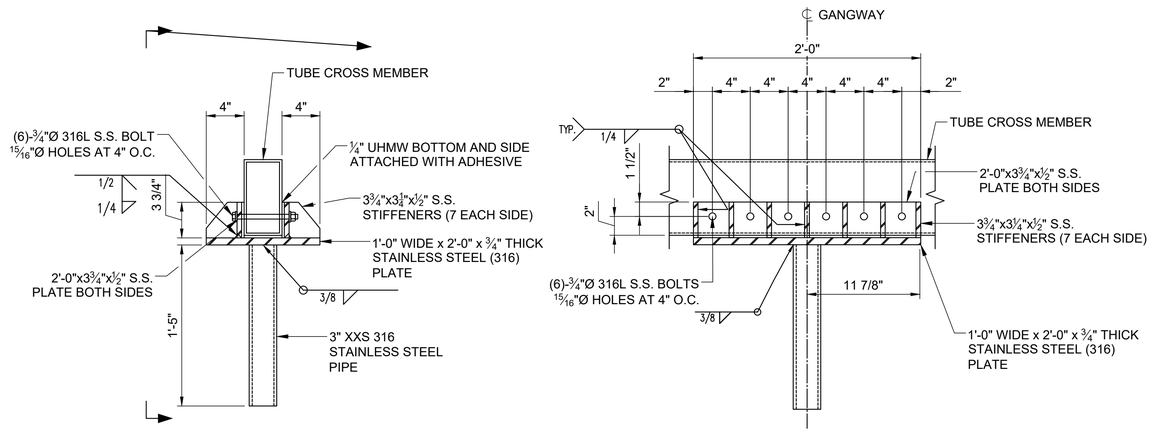

C 5TH WHEEL PIN DETAIL

SCALE: 1-1/2" = 1'-0"

ELEVATION	MLLW	NAVD88*
BFE	+19.0	+14.0
HAT	+11.6	+6.6
MHHW	+9.7	+4.7
MHW	+9.3	+4.3
MSL	+4.8	-0.2
MLW	+0.3	-4.7
MLLW	0.0	-5.0

*PROJECT DATUM

Attention:

0 1"

If this scale bar does not measure 1" then drawing is not original scale.

STATE OF MAINE
DANIEL J. BANNON
No. 13033
LICENSED PROFESSIONAL ENGINEER
4/16/2025

Designed:	DJB
Drawn:	JAM
Checked:	BJB
Approved:	BMM
P.E. No:	13033
GEI Project	2203703

GEI Consultants
GEI CONSULTANTS, INC.
5 MILK STREET
PORTLAND, ME 04101
(207)797-8901

UNIVERSITY OF NEW ENGLAND

11 HILLS BEACH RD.
BIDDEFORD, MAINE

UNIVERSITY OF NEW ENGLAND MARINE SCIENCE CENTER PIER

11 HILLS BEACH ROAD
BIDDEFORD, YORK COUNTY, MAINE

NO	DATE	ISSUE/REVISION	APP
7	4/16/2025	BIDDEFORD PERMIT APP.	DJB
6	9/17/2024	REVISED PERMIT SET	DJB
5	6/27/2024	REVISED PERMIT SET	DJB
4	9/14/2023	DEP PERMIT SET	DJB
3	6/28/2023	75% DESIGN SUBMISSION	DJB
2	2/15/2023	30% DESIGN SUBMISSION	DJB
1	12/9/2022	15% DESIGN SUB REV	DJB
0	11/11/2022	15% DESIGN SUBMISSION	DJB

SHEET NAME

MISCELLANEOUS DETAILS (5 OF 5)

SHEET NO.

S-013

FOR PERMIT

BANNON, DAN \\bos1v-fs02\Data_Storage\Working\UNIVERSITY OF NEW ENGLAND\2203703 UNE Marine Science Center Pier\00_CAD\Design\Sheets\2203703-S-013.dwg - 4/16/2025

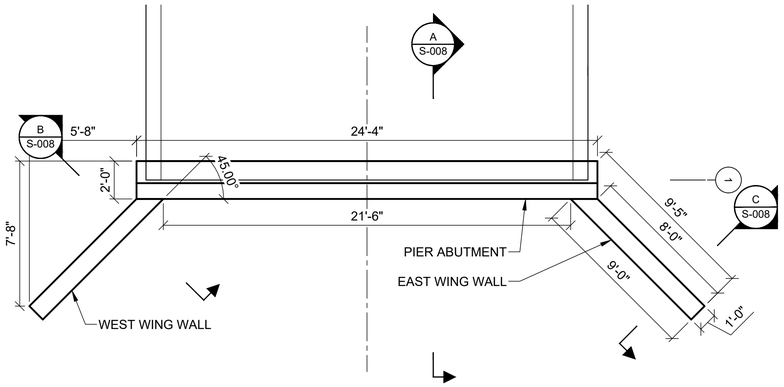

ABUTMENT PLAN

SCALE: SCALE: 3" = 1'-0"

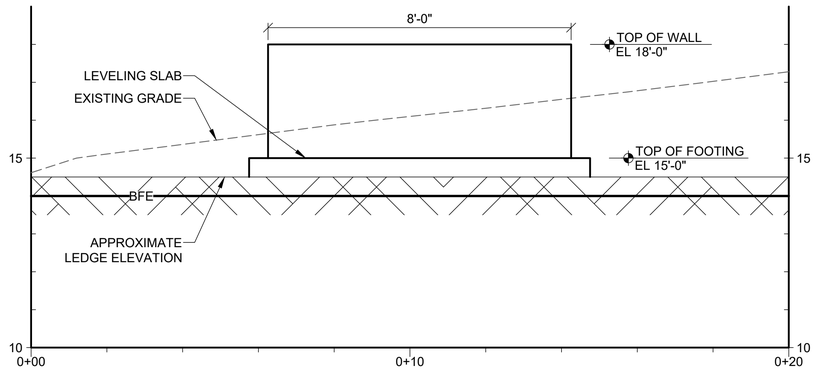

WEST WING WALL ELEVATION

SCALE: 6" = 1'-0"

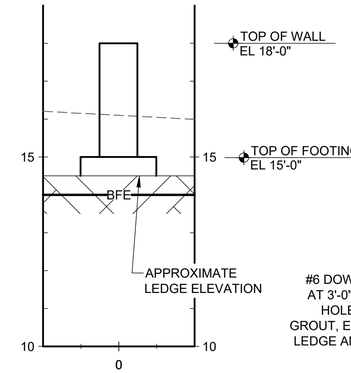

B WEST WING WALL SECTION

SCALE: 6" = 1'-0"

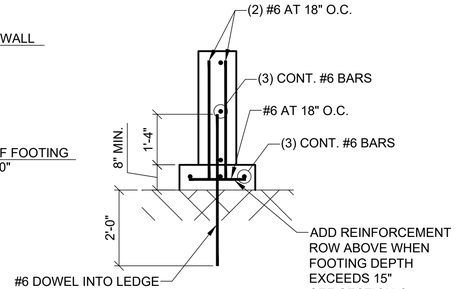

B SECTION

WEST WING WALL REINFORCEMENT SCALE: 6" = 1'-0"

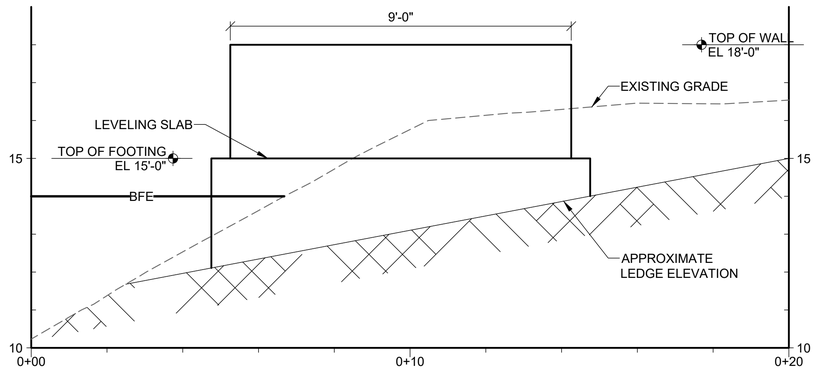

EAST WING WALL ELEVATION

SCALE: 6" = 1'-0"

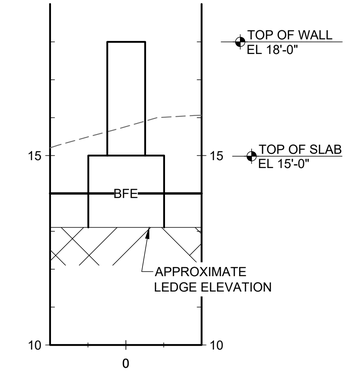

C EAST WING WALL SECTION

SCALE: 6" = 1'-0"

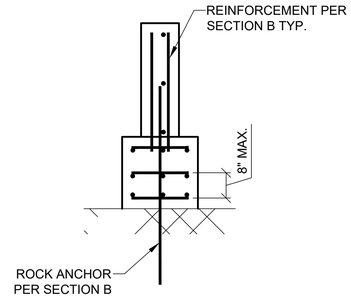

C SECTION

EAST WING WALL REINFORCEMENT SCALE: 6" = 1'-0"

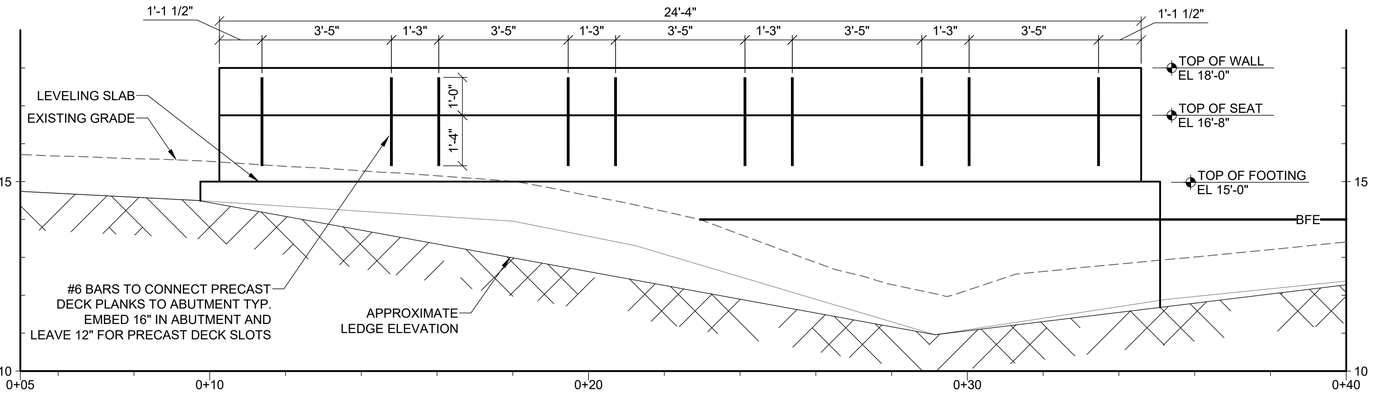

ABUTMENT ELEVATION A

SCALE: 3" = 1'-0"

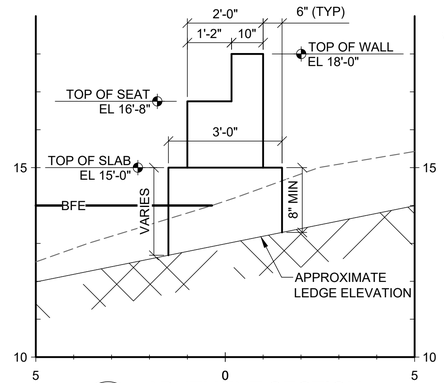

A ABUTMENT SECTION

SCALE: 6" = 1'-0"

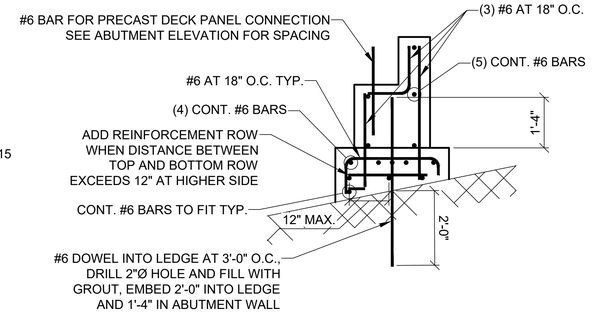

A SECTION

ABUTMENT REINFORCEMENT SCALE: 6" = 1'-0"

FOR PERMIT

ELEVATION	MLLW	NAVD88*
BFE	+19.0	+14.0
HAT	+11.6	+6.6
MHHW	+9.7	+4.7
MHW	+9.3	+4.3
MSL	+4.8	-0.2
MLW	+0.3	-4.7
MLLW	0.0	-5.0

*PROJECT DATUM

Attention:

0 1"

If this scale bar does not measure 1" then drawing is not original scale.

STATE OF MAINE
DANIEL J. BANNON No. 13033
LICENSED PROFESSIONAL ENGINEER
4/16/2025

Designed:	DJB
Drawn:	JAM
Checked:	BJB
Approved:	BMM
P.E. No:	13033
GEI Project	2203703

GEI Consultants
GEI CONSULTANTS, INC.
5 MILK STREET
PORTLAND, ME 04101
(207)797-8901

UNE
UNIVERSITY OF NEW ENGLAND
11 HILLS BEACH RD.
BIDDEFORD, MAINE

UNIVERSITY OF NEW ENGLAND MARINE SCIENCE CENTER PIER

11 HILLS BEACH ROAD
BIDDEFORD, YORK COUNTY, MAINE

NO	DATE	ISSUE/REVISION	APP
7	4/16/2025	BIDDEFORD PERMIT APP.	DJB
6	9/17/2024	REVISED PERMIT SET	DJB
5	6/27/2024	REVISED PERMIT SET	DJB
4	9/14/2023	DEP PERMIT SET	DJB
3	6/28/2023	75% DESIGN SUBMISSION	DJB
2	2/15/2023	30% DESIGN SUBMISSION	DJB
1	12/9/2022	15% DESIGN SUB REV	DJB
0	11/11/2022	15% DESIGN SUBMISSION	DJB

SHEET NAME: **ABUTMENT DETAILS**

SHEET NO.: **S-014**

BANNON, DAN \\bos1v-fs02\Data_Storage\Working\UNIVERSITY OF NEW ENGLAND\2203703 UNE Marine Science Center Pier\00_CAD\Design\Sheets\2203703-S-014.dwg - 4/16/2025

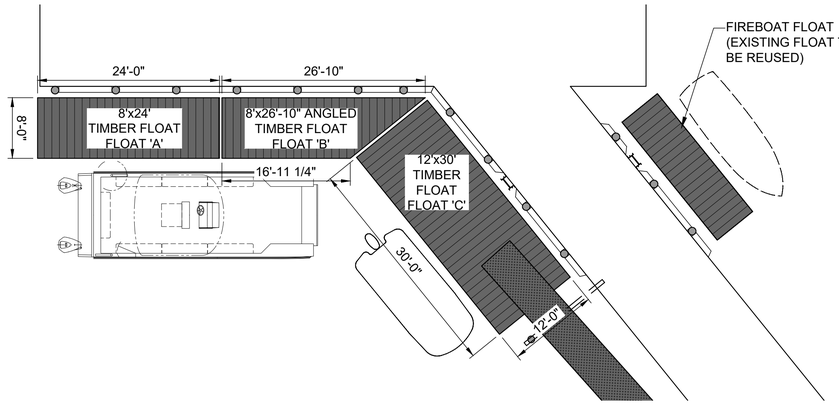

1 PLAN
FLOAT LAYOUT SCALE: 1" = 10'

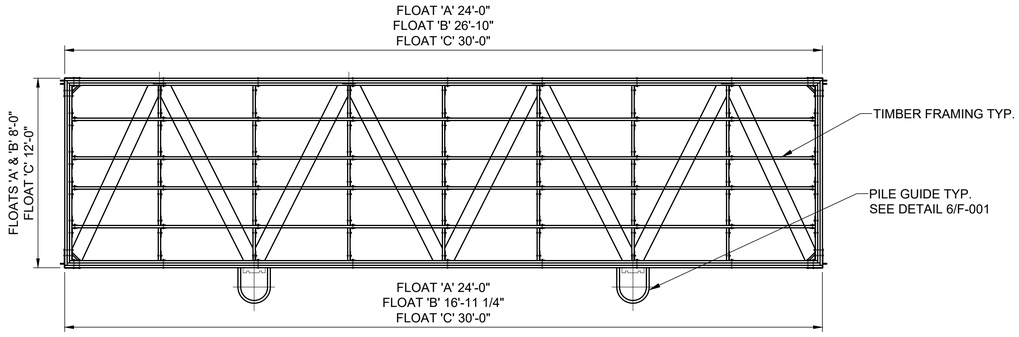

NOTES:
1. CONTRACTOR/FABRICATOR TO DETERMINE ACTUAL MEMBER SIZES PER LOADING REQUIREMENTS.

2 PLAN
TYP. FLOATING DOCK SCALE: 1" = 4'

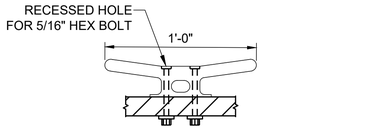

CLEAT LAYOUT:
FLOAT 'A' (4) @ EQ. SP ON SOUTH FACE
FLOAT 'B' (3) @ EQ. SP ON SOUTH FACE
FLOAT 'C' (4) @ EQ. SP ON WEST FACE

4 DETAIL
12" CLEAT SCALE: 2:1

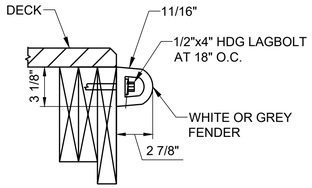

5 DETAIL
DOCK FENDER SCALE: 2:1

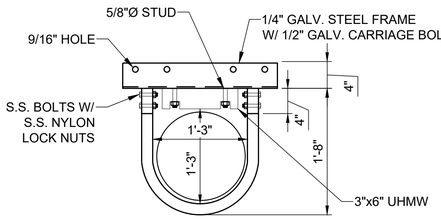

PILE GUIDE LAYOUT:
PROVIDE PILE GUIDES AT ALL TIMBER PILE LOCATIONS
FLOAT 'A' (3) REQ
FLOAT 'B' (4) REQ
FLOAT 'C' (4) REQ

6 DETAIL
PILE GUIDE SCALE: 1:1

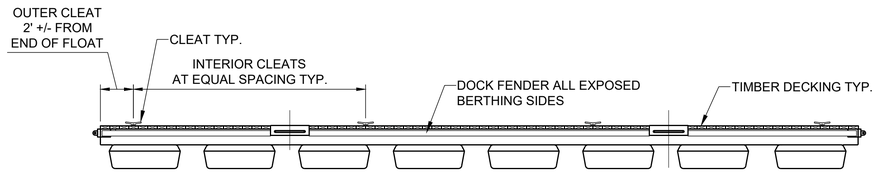

NOTES:
1. FLOTATION UNITS SHOWN ARE FOR GRAPHIC REPRESENTATION ONLY, CONTRACTOR/MANUFACTURER SHALL DETERMINE SIZE AND QUANTITY PER LOADING REQUIREMENTS.

3 ELEVATION
TYP. FLOATING DOCK SCALE: 1" = 4'

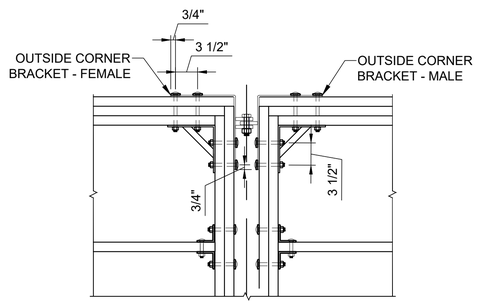

7 DETAIL
FLOAT CONNECTION SCALE: 1:1

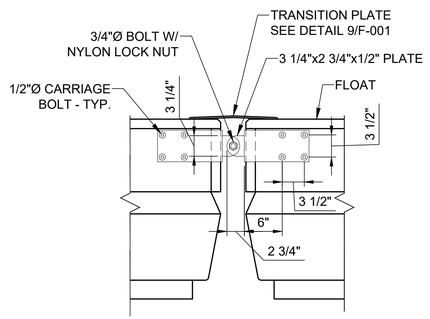

8 SECTION
FLOAT CONNECTION SCALE: 1:1

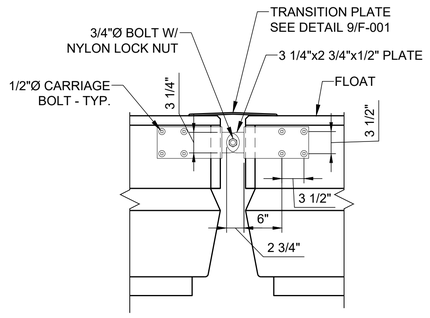

9 DETAIL
TRANSITION PLATE SCALE: 1:1

0 10 20
SCALE, FEET

0 1 2 4
SCALE, FEET

0 40 80
SCALE, FEET

ELEVATION	MLLW	NAVD88*
BFE	+19.0	+14.0
HAT	+11.6	+6.6
MHHW	+9.7	+4.7
MHW	+9.3	+4.3
MSL	+4.8	-0.2
MLW	+0.3	-4.7
MLLW	0.0	-5.0

*PROJECT DATUM

Attention:
0 1"
If this scale bar does not measure 1" then drawing is not original scale.

STATE OF MAINE
DANIEL J. BANNON
No. 13033
LICENSED PROFESSIONAL ENGINEER
4/16/2025

Designed:	DJB
Drawn:	JAM
Checked:	BJB
Approved:	BMM
P.E. No:	13033
GEI Project	2203703

GEI Consultants
GEI CONSULTANTS, INC.
5 MILK STREET
PORTLAND, ME 04101
(207)797-8901

UNIVERSITY OF NEW ENGLAND
11 HILLS BEACH RD.
BIDDEFORD, MAINE

UNIVERSITY OF NEW ENGLAND MARINE SCIENCE CENTER PIER

11 HILLS BEACH ROAD
BIDDEFORD, YORK COUNTY, MAINE

NO	DATE	ISSUE/REVISION	APP
7	4/16/2025	BIDDEFORD PERMIT APP.	DJB
6	9/17/2024	REVISED PERMIT SET	DJB
5	6/27/2024	REVISED PERMIT SET	DJB
4	9/14/2023	DEP PERMIT SET	DJB
3	6/28/2023	75% DESIGN SUBMISSION	DJB
2	2/15/2023	30% DESIGN SUBMISSION	DJB
1	12/9/2022	15% DESIGN SUB REV	DJB
0	11/11/2022	15% DESIGN SUBMISSION	DJB

SHEET NAME
FLOAT PLAN AND DETAILS

SHEET NO.
F-001

FOR PERMIT

BANNON, DAN \\gisconsultants.com\data\Data_Storage\Working\UNIVERSITY OF NEW ENGLAND\2203703 UNE Marine Science Center Pier\00_CAD\Design\Sheets\2203703-F-001.dwg - 4/16/2025

DEPARTMENT OF THE ARMY
U.S. ARMY CORPS OF ENGINEERS, NEW ENGLAND DISTRICT
NEW ENGLAND DISTRICT OFFICE
696 VIRGINIA ROAD
CONCORD MASSACHUSETTS 01742-2751

March 28, 2025

Regulatory Division

Andrew Phillippe
University of New England
11 Hills Beach Road
Biddeford, Maine 04005
Via Email: aphilippe@une.edu

Dear Mr. Phillippe:

This letter is in response to the application you submitted to the U.S. Army Corps of Engineers (USACE), New England District on June 21, 2024 for a Department of the Army general permit verification. We have assigned this project file number NAE-2024-01628, which you should reference in all correspondence with this office.

A review of the information provided indicates the proposed work includes the construction of a permanent pier consisting of a 28-foot long by 24-foot-wide landing; a 90-foot long by 14-foot-wide approach pier; and an 80-foot long by 24-foot-long pier. Additionally, your project includes a floating dock system consisting of an 80-foot long by 5-foot-wide gangway; a 30-foot long by 12-foot wide float; a 24-foot long by 8-foot wide float; and a 27-foot long by 8-foot wide float, and a 20-foot long by 6-foot wide float. The project is located in the Saco River; at 11 Hills Beach Road, at Latitude 43.458630º and Longitude -70.389050º; in Biddeford, York County, Maine. The work is shown on the enclosed plans titled “University of New England Marine Science Center Pier”, on 38 sheets, and dated 8/14/2024.

Based on the information you have provided; we verify that the activity is authorized under General Permit *2. Structures, Floats, and Lifts* of the October 14, 2020, federal permit known as the Maine General Permits (GPs). If the extent of the project area and/or nature of the authorized impacts to waters are modified, a revised application must be submitted to this office for written approval before work is initiated. You can find a copy of these permits at:
https://www.nae.usace.army.mil/Missions/Regulatory/State-General-Permits/

Any deviation from the terms and conditions of the permit, or your submitted plans, may subject the permittee to the enforcement provisions of our regulations. Therefore, in the event changes to this project are contemplated, it is recommended you coordinate with this office prior to proceeding with the work. This office must approve any changes before you undertake them. You must perform this work in compliance

with the terms and conditions of the GPs listed above, and also in compliance with the following special conditions:

1. The permittee shall complete and return the enclosed Work-Start Notification Form to this office at least two weeks prior to the anticipated construction start date.

2. The permittee shall complete and return the enclosed Completion Certification Form to this office at least one month following the completion of the authorized work.

3. You must maintain the activity herein in good condition and in conformance with the terms and conditions of this authorization. You are not relieved of this requirement if you abandon the permitted activity, although you may make a good faith transfer to a third party in compliance with a general condition of these GPs. Should you wish to cease to maintain the authorized activities, or should you desire to abandon it without a good faith transfer, you must obtain a modification of this authorization from this office, which may require restoration of the area.

4. All construction shall be completed in accordance with the limits of construction and construction sequences detailed on the enclosed plan drawings, titled “University of New England Marine Science Center Pier,” on a total of 38 sheets, and dated 8/14/2024. If you change the plans or construction methods for work within or adjacent to the Saco River, please contact us immediately to discuss modification of this authorization. The USACE must approve any changes before you undertake them.

5. A “soft start” is required to allow animals an opportunity to leave the project vicinity before sound pressure levels increase. In addition to using a soft start at the beginning of the workday for pile driving, one must also be used at any time following cessation of pile driving for a period of 30 minutes or longer.

a) For impact pile driving: Pile driving will commence with an initial set of three strikes by the hammer at 40% energy, followed by a one-minute wait period, then two subsequent 3-strike sets at 40% energy, with one-minute waiting periods, before initiating continuous impact driving.

b) For vibratory pile installation: Pile driving will be initiated for 15 seconds at reduced energy followed by a one-minute waiting period. This sequence of 15 seconds of reduced energy driving, one-minute waiting period will be repeated two additional times, followed immediately by pile-driving at full rate and energy.

6. The work authorized herein shall not be conducted during the time of year (TOY) restriction of April 10 to November 7 in order to minimize adverse impacts to the Atlantic sturgeon, shortnose sturgeon.

This verification is valid until October 14, 2025. You must commence or be under contract to commence the work authorized herein by October 14, 2025 and complete

the work by October 14, 2026. If not, you must contact this office to determine the need for further authorization before beginning or continuing the activity. It is recommended that you contact this office before this authorization expires to discuss if permit reissuance is a possibility.

This GP verification and any associated authorizations does not preclude the necessity to obtain any other federal, state, or local permits, licenses, and/or certifications, which may be required.

If you have any questions related to this verification or have issues accessing documents referenced in this letter, please contact Jana Jacobson, Project Manager at (207) 233-2117, or by email at Jana.L.Jacobson@usace.army.mil. This agency continually strives to improve our customer service. To better serve you, please complete the Customer Service Survey located at: https://regulatory.ops.usace.army.mil/customer-service-survey/.

Sincerely,



Jon T. Coleman
Team Leader
Technical Regional Execution Center
North Atlantic Division

Enclosures

Cc (w/enclosures):
Tom Saucier, Site Design Associates (via tsaucier@sitedesignassociates.biz)

UNIVERSITY OF NEW ENGLAND
MARINE SCIENCE CENTER PIER

BIDDEFORD, MAINE

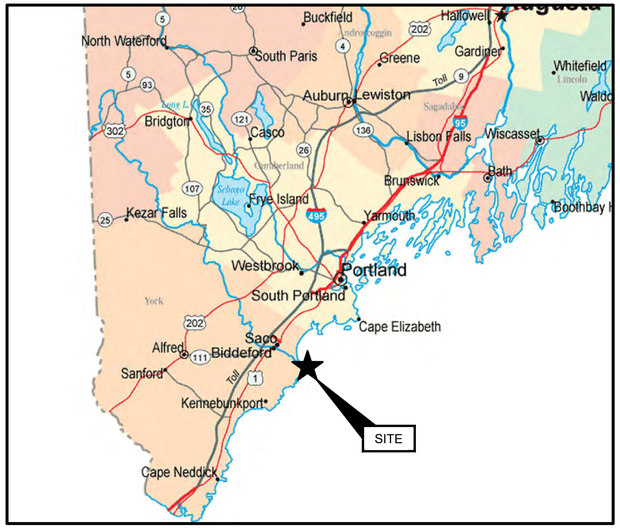

SOURCE:
MAINE ROAD MAP, GOOGLE IMAGES, ACCESSED SEPTEMBER 2023.

STATE MAP
(NOT TO SCALE)

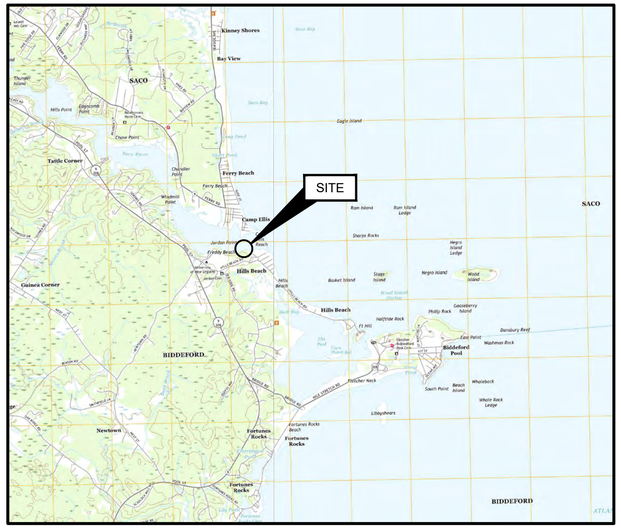

SOURCE:
USGS TOPOGRAPHICAL MAP OF BIDDEFORD, MAINE 2022

SITE LOCATION MAP
(NOT TO SCALE)

SHEET INDEX

SHEET NO.	DRAWING NO.	TITLE
1	G-001	COVER SHEET
2	G-002	GENERAL NOTES
3	G-003	VICINITY PLAN
4	B-001	BORING LOCATION PLAN
5	B-002	BORING LOGS (1 OF 3)
6	B-003	BORING LOGS (2 OF 3)
7	B-004	BORING LOGS (3 OF 3)
8	B-005	INTERPRETIVE SUBSURFACE PROFILE
9	C-001	EXISTING CONDITIONS PLAN
10	C-002	DEMOLITION AND CONSTRUCTION STAGING
11	C-003	SITE PLAN
12	C-004	GRADING AND DRAINAGE PLAN
13	C-005	EROSION CONTROL PLAN
14	C-006	ACCESS ROAD PLAN AND PROFILE STA 1+00 TO MATCHLINE STA 4+00
15	C-007	ACCESS ROAD PLAN AND PROFILE MATCHLINE STA 4+00 TO STA 6+60
16	C-008	ACCESS ROAD TYPICAL SECTION
17	C-009	ACCESS ROAD SECTIONS 2+00 TO 3+75
18	C-010	ACCESS ROAD SECTIONS 4+00 TO 5+75
19	C-011	SITE DETAILS I
20	C-012	EROSION CONTROL NOTES
21	C-013	EROSION CONTROL DETAILS I
22	C-014	EROSION CONTROL DETAILS II
23	C-015	REVEGETATION PLAN
24	S-001	PIER LAYOUT PLAN
25	S-002	PIER PLANS AND ELEVATIONS
26	S-003	TYPICAL PIER SECTIONS (1 OF 2)
27	S-004	TYPICAL PIER SECTIONS (2 OF 2)
28	S-005	PILE PLAN
29	S-006	PRECAST PILE CAP PLAN (1 OF 2)
30	S-007	PRECAST PILE CAP PLAN (1 OF 2)
31	S-008	PRECAST DECK PLANK PLAN
32	S-009	MISCELLANEOUS DETAILS (1 OF 5)
33	S-010	MISCELLANEOUS DETAILS (2 OF 5)
34	S-011	MISCELLANEOUS DETAILS (3 OF 5)
35	S-012	MISCELLANEOUS DETAILS (4 OF 5)
36	S-013	MISCELLANEOUS DETAILS (5 OF 5)
37	S-014	ABUTMENT DETAILS
38	F-001	FLOAT PLAN AND DETAILS

PREPARED FOR:

UNIVERSITY OF NEW ENGLAND
11 HILLS BEACH ROAD
BIDDEFORD, MAINE
(207)283-0171

PREPARED BY:

GEI CONSULTANTS, INC.
5 MILK STREET
PORTLAND, ME 04101
(207)797-8901

811 DigSafe

THIS DOCUMENT, AND THE IDEAS AND DESIGNS INCORPORATED HEREIN, IS AN INSTRUMENT OF PROFESSIONAL SERVICE, IS THE PROPERTY OF GEI CONSULTANTS AND IS NOT TO BE USED, IN WHOLE OR IN PART, FOR ANY OTHER PROJECT WITHOUT THE WRITTEN AUTHORIZATION OF GEI CONSULTANTS.

GEI PROJECT NO. 2203703

NO.	DATE	ISSUE/REVISION	APP
6	8/14/2024	REVISED PERMIT SET	DJB
5	6/27/2024	REVISED PERMIT SET	DJB
4	9/14/2023	DEP PERMIT SET	DJB
3	6/28/2023	75% DESIGN SUBMISSION	DJB
2	2/15/2023	30% DESIGN SUBMISSION	DJB
1	12/9/2022	15% DESIGN SUBMISSION, REV	DJB
0	11/11/2022	15% DESIGN SUBMISSION	DJB

FOR PERMIT

DRAFT

DWG. NO.
G-001

SHEET NO.
1 OF 38

COORDINATION OF WORK:

1. THE CONTRACTOR SHALL SCHEDULE ALL ACTIVITIES SO AS TO LIMIT IMPACT TO MARINE AND LANDSIDE USES.
2. WORK SHALL BE COORDINATED WITH THE OWNER AND THEIR REPRESENTATIVES:

UNE:A:A:A:	ANDREW PHILIPPE	207-602-2365 (OFFICE)	207-400-6166 (CELL)
GEI:A:A:B:	DANIEL BANNON	207-347-2372 (OFFICE)	207-671-2583 (CELL)
SDA:A:A:C:	TOM SAUCIER	207-449-4275	

3. WORK IS SUBJECT TO THE FOLLOWING TIME OF YEAR AND TIMING OF ACTIVITY RESTRICTIONS:
   - TO BE DEFINED UPON PERMIT APPROVAL.
4. CONTRACTOR ACCESS TO THE SITE BY WATER SHALL AT NO TIME IMPACT USE OF THE ADJACENT FEDERAL NAVIGATION CHANNEL.
5. THE OWNER WILL PERMIT THE CONTRACTOR TO HAVE A LAYDOWN AREA ON THE UPLAND PROPERTY FOR USE DURING CONSTRUCTION. AN APPROXIMATE LAYDOWN AREA IS SHOWN ON SHEET C-005. THE FINAL LOCATION AND DIMENSIONS OF THE LAYDOWN AREA SHALL BE APPROVED BY THE OWNER.

SITE ENVIRONMENTAL CONTROLS:

1. ALL WORK SHALL BE PERFORMED IN COMPLIANCE WITH CITY, STATE, AND FEDERAL PERMITS. COPIES OF PERMIT APPROVALS ARE PROVIDED IN THE PROJECT MANUAL.

OSHA REQUIREMENTS:

1. PURSUANT TO 26 M.R.S.A. §565, THE CONTRACTOR SHALL ADHERE TO THE OCCUPATIONAL SAFETY AND HEALTH STANDARDS AS PROMULGATED BY THE FEDERAL OCCUPATIONAL SAFETY AND HEALTH ADMINISTRATION (OSHA) AT 29-CFR PART 1926 AS MOST RECENTLY AMENDED.

EROSION CONTROL:

1. EROSION AND SEDIMENTATION CONTROL MEASURES ARE PROPOSED TO CONTROL ACCELERATED EROSION AND SEDIMENTATION AND REDUCE ADVERSE IMPACTS FROM RUNOFF AND EROSION AT THE WORK SITE.
2. APPLICATION OF TEMPORARY AND PERMANENT EROSION CONTROL MEASURES SHALL BE IN ACCORDANCE WITH THE LATEST EDITION OF THE MAINE EROSION AND SEDIMENT CONTROL BMP'S PUBLISHED BY MAINE DEP AND AVAILABLE AT: HTTPS://WWW.MAINE.GOV/DEP/LAND/EROSION/ESCBMPS/
3. THE WORK SHALL BE PERFORMED BY A CONTRACTOR THAT IS CERTIFIED BY MAINE DEP IN EROSION AND SEDIMENT CONTROL MEASURES. A CERTIFIED INDIVIDUAL SHALL BE ONSITE DURING ALL CONSTRUCTION ACTIVITY.
4. EROSION AND SEDIMENTATION DUE TO RUNOFF, TIDAL EXPOSURE, AND WAVE ACTION SHALL BE CONTROLLED BY STAGING CONSTRUCTION ACTIVITY TO MINIMIZE AREA AND TIME OF DISTURBANCE, APPLICATION OF SILT FENCE, BOOMS, BARRIERS, AND OTHER EROSION CONTROL MEASURES, AND PRESERVING NATURAL VEGETATION WHENEVER POSSIBLE.
5. THE CONTRACTOR'S SEQUENCE OF OPERATIONS AND SCHEDULE FOR WORK ACTIVITIES SHALL ACT TO MINIMIZE EXPOSURE TO EROSION.
6. THE CONTRACTOR SHALL TAKE CARE TO LIMIT THE AREA OF SOIL DISTURBANCE TO THE MINIMUM NECESSARY TO COMPLETE THE WORK.
7. EROSION CONTROL MEASURES, SEEDING, AND VEGETATION SHALL BE INSPECTED WEEKLY AND AFTER RAINSTORMS, RUNOFF EVENTS, AND STORM EVENTS UNTIL FINAL ACCEPTANCE. REPAIRS SHALL BE MADE WHEN NO LONGER SERVICEABLE DUE TO DAMAGE OR ACCUMULATION OF SEDIMENT.
8. AT THE COMPLETION OF CONSTRUCTION, ALL DISTURBED AREAS SHALL BE RESTORED TO THEIR ORIGINAL CONDITION AND CONTOUR, UNLESS OTHERWISE INDICATED ON THE PLANS.

SITE PREPARATION:

1. CONTRACTOR SHALL INSTALL ALL SIGNAGE PRIOR TO INITIATION OF CONSTRUCTION ACTIVITIES. INCLUDE OWNER PROJECT SIGNAGE AND FEDERAL AND STATE MANDATED WORK PLACE SIGNAGE.
2. CONTRACTOR SHALL HAVE IN-PLACE TRASH AND SANITARY FACILITIES FOR THE WORK PLACE.
3. DISCOVERY OF INCONSISTENT SITE INFORMATION OR CONDITIONS ARE TO BE IMMEDIATELY CONVEYED TO THE OWNER AND ENGINEER PRIOR TO COMMENCING OR CONTINUING CONSTRUCTION.
4. THE CONTRACTOR SHALL NOTIFY DIG SAFE PRIOR TO COMMENCING ANY WORK.
5. LOCATIONS OF EXISTING UTILITIES SHOWN ARE APPROXIMATE. THE CONTRACTOR SHALL VERIFY LOCATIONS OF UTILITIES AS MAY BE REQUIRED. THE CONTRACTOR SHALL BE FULLY RESPONSIBLE FOR ANY AND ALL DAMAGES OCCURRING AS A RESULT OF THE CONTRACTOR'S FAILURE TO LOCATE AND PROTECT UNDERGROUND UTILITIES. ALL REPAIRS SHALL BE MADE AT THE CONTRACTOR'S EXPENSE.
6. CONTRACTOR SHALL MAINTAIN AND PROTECT ALL EXISTING UTILITIES AND DRAINAGE AT ALL TIMES. THE CONTRACTOR SHALL REPAIR ANY DAMAGE AND RESTORE TO THE PRE-EXISTING CONDITION AT NO COST TO THE OWNER.
7. CONTRACTOR SHALL PROTECT ALL EXISTING STRUCTURES AND SHALL PERFORM THE WORK IN A MANNER THAT AVOIDS DAMAGE TO EXISTING STRUCTURES. STRUCTURES INCLUDE, BUT ARE NOT LIMITED TO, BUILDINGS, PIERS, BULKHEADS, FLOATS, PIER UTILITIES AND FIXTURES, AND RIPRAP SLOPES. CONTRACTOR SHALL REPAIR ANY DAMAGE AT NO ADDITIONAL COST TO THE CITY.
8. CONTRACTOR SHALL SUPPLY ALL NECESSARY TEMPORARY UTILITIES FOR CONSTRUCTION INCLUDING, BUT NOT LIMITED TO; WATER, POWER, LIGHTING, DATA, AND TELEPHONE.
9. CONTRACTOR SHALL READ AND UNDERSTAND ALL REGULATORY CONDITIONS ASSOCIATED WITH THE PROJECT AND SHALL COMPLY WITH ALL ENVIRONMENTAL REQUIREMENTS AND PERMIT CONDITIONS.
10. CONTRACTOR SHALL PROVIDE A CONFINED CONCRETE TRUCK WASHDOWN AREA AT A LOCATION TO BE APPROVED BY THE ENGINEER. WASHDOWN AREA SHALL INCLUDE PROTECTION TO PAVEMENT, A PERIMETER WALL AND A FILTER FABRIC LINER. NO RUNOFF CONTAINING CEMENT OR OTHER SUSPENDED SOLIDS WILL BE PERMITTED. ALL MATERIALS SHALL BE COMPLETELY REMOVED UPON COMPLETION OF CONSTRUCTION AND DISPOSED OF AT AN APPROVED DISPOSAL LOCATION.

CODES:

1. MAINE DOT STANDARD SPECIFICATIONS, MARCH 2020 ED. WITH SUPPLEMENTAL SPECIFICATIONS THROUGH JUNE 16,2023.
2. MAINE UNIFORM BUILDING AND ENERGY CODE (MUBEC).
3. AMERICAN CONCRETE INSTITUTE (ACI) 318-14: BUILDING CODE REQUIREMENTS FOR STRUCTURAL CONCRETE, 2014 ED.
4. CONCRETE REINFORCING STEEL INSTITUTE (CRSI):
5. AMERICAN INSTITUTE FOR STEEL CONSTRUCTION (AISC) STEEL CONSTRUCTION MANUAL, 15TH ED.
6. ALUMINUM ASSOCIATION, ALUMINUM DESIGN MANUAL, 2015 ED.
7. AMERICAN WOOD COUNCIL, NATIONAL DESIGN SPECIFICATIONS (NDS) FOR WOOD CONSTRUCTION, 2015 ED.

SITE CONTROL AND BASELINES:

1. PROJECT BASE PLAN HAS BEEN DEVELOPED FROM A COMPILATION OF MULTIPLE SURVEYS AS DESCRIBED UNDER "SURVEY AND PROPERTY NOTES".
2. ELEVATIONS ARE PROVIDED IN NAVD88 VERTICAL DATUM UNLESS OTHERWISE NOTED.
3. THE CONTRACTOR SHALL INSTALL SURVEY CONTROL AS NECESSARY TO PERFORM THE WORK. PERMANENT SURVEY CONTROL (AT LEAST 2 POINTS) SHALL BE ESTABLISHED FOR THE PROJECT AND PROTECTED FROM DAMAGE DURING CONSTRUCTION AND PROVIDED ON AS-BUILT DRAWINGS.
4. THE CONTRACTOR SHALL ESTABLISH AND MAINTAIN PROJECT BASELINES AND CONTROL AS REQUIRED TO ENSURE ACCURATE LOCATION OF ALL ELEMENTS OF THE PROJECT.

SURVEY AND PROPERTY NOTES:

1. LOCUS PARCEL IS DEPICTED ON CITY OF BIDDEFORD, TAX MAP 52, LOT 4 AND IS LOCATED IN THE INSTITUTIONAL (IN) ZONE. A PORTION OF THE SITE IS LOCATED IN THE LIMITED RESIDENTIAL (LR) SHORELAND OVERLAY DISTRICT.
2. THE RECORD OWNER IS THE UNIVERSITY OF NEW ENGLAND, BY DEED DATED APRIL 18, 1962, RECORDED IN THE YORK COUNTY REGISTRY OF DEEDS IN BOOK 1484, PAGE 0145.
3. UPLAND TOPOGRAPHY AND BASE SURVEY INFORMATION DEPICTED HEREON ARE BASED ON THE FOLLOWING SURVEYS:
   - "TOPOGRAPHIC SURVEY, MARINE SCIENCE CENTER, UNIVERSITY OF NEW ENGLAND" BY OWEN HASKELL, INC. DATED DEC. 13, 2022.
   - "TOPOGRAPHIC SURVEY AT MARINE SCIENCE CENTER" BY STATEWIDE SURVEYS, INC., DATED MAY 4, 2015.
4. HYDROGRAPHIC DATA DEPICTED HEREON IS BASED ON 2022 SURVEY BY OWEN HASKELL SURVEY.
5. FEDERAL CHANNEL LIMITS ARE DEPICTED BASED ON THE PLAN. "SACO RIVER, SACE AND BIDDEFORD, MAINE, CONDITION SURVEY" PUBLISHED BY THE U.S. ARMY CORPS OF ENGINEERS, DATED JULY 3, 2021.
6. HORIZONTAL COORDINATES ARE BASED ON NAD83 MAINE STATE PLANE WEST ZONE-1801 AND ARE EXPRESSED IN FEET. ELEVATIONS ARE BASED ON NAVD88 VERTICAL DATUM AND CONTROL POINTS PROVIDED BY UNE.
7. UTILITY INFORMATION DEPICTED HEREON IS BASED ON FEBRUARY 2023 UTILITY LOCATION SURVEY PERFORMED BY BLOOD HOUND, LLC UNDERGROUND UTILITY LOCATORS AND MAY NOT NECESSARILY REPRESENT ALL EXISTING UTILITIES. CONTACT DIG SAFE (1-888-DIG-SAFE) AND VERIFY EXISTING UTILITIES PRIOR TO ANY CONSTRUCTION OR EXCAVATION.
8. PORTIONS OF THE PROPERTY ARE DEPICTED AS BEING IN A SPECIAL FLOOD HAZARD AREA BASED ON FEMA PRELIMINARY FIRM 23031C0459G DATED APRIL 14, 2017. THE SITE IS LOCATED IN A VE ZONE HAVING BASE FLOOD ELEVATION OF 14 FT NAVD88.
9. SUBSURFACE INFORMATION IS BASED ON EXPLORATIONS PERFORMED IN 2015 AND 2022 CONSISTING OF BORINGS, PROBES, AND TEST PITS. REFER TO SHEETS B-001 - B-005 FOR SUBSURFACE INFORMATION.

CONCRETE

1. CAST IN PLACE CONCRETE SHALL CONFORM TO THE FOLLOWING SPECIFICATIONS BASED ON THE MAINE DOT STANDARD SPECIFICATION:

LOCATION	MDOT CLASS	f'c
ALL CONCRETE	CLASS LP	5,000 PSI

2. ALL REINFORCEMENT SHALL BE NEW DEFORMED BARS, GRADE 60 CONFORMING TO ASTM A615, HOT DIP GALVANIZED ACCORDING TO ASTM A767/A767M OR ASTM A1094/A1094M.
3. REINFORCEMENT ACCESSORIES SHALL BE DIELECTRIC COATED STEEL OR APPROVED PLASTIC.
3. GROUT SHALL BE A HIGH STRENGTH, NON-SHRINK GROUT WITH SALT WATER RESISTANCE.
4. CONCRETE COVER SHALL BE A MINIMUM OF 3 INCHES UNLESS NOTED OTHERWISE.
5. ALL EXPOSED EDGES OF CONCRETE AT COLD JOINTS SHALL HAVE A ROUGHENED FINISH AND BE COATED WITH EPOXY BONDING AGENT PRIOR TO CASTING ADJACENT POUR.
6. PROVIDE 1 INCH CHAMFER ON ALL EXPOSED EDGES UNLESS NOTED OR DIRECTED OTHERWISE.
7. TOP SURFACE OF EXPOSED CONCRETE SHALL RECEIVE A BROOM FINISH.
8. COAT FINISHED SURFACES OF CONCRETE WITH A 100% SILANE PENETRATING CONCRETE SEALER SUITABLE FOR USE IN A MARINE ENVIRONMENT. SEALER SHALL BE LISTED ON THE MAINE DOT QUALIFIED PRODUCTS LIST.
9. REINFORCEMENT DEVELOPMENT AND LAP SPLICE LENGTHS SHALL BE IN ACCORDANCE WITH ACI 318.
10. CONCRETE MIX DESIGN SHALL INCLUDE THE USE OF CORROSION INHIBITING ADMIXTURE AT DOSAGE SUITABLE FOR USE IN AN AGGRESSIVE MARINE ENVIRONMENT. CORROSION INHIBITOR SHALL BE LISTED ON THE MAINE DOT QUALIFIED PRODUCTS LIST.

EPOXY ANCHORS

1. ANCHOR ROD, WASHERS, AND NUTS SHALL CONFORM TO ASTM F1554, GRADE 36, AND SHALL BE HOT DIP GALVANIZED.
2. THE MINIMUM EDGE DISTANCE AND MINIMUM SPACING FOR ALL ANCHORS SHALL BE 6 BOLT DIAMETERS.
3. ALL HOLES SHALL BE DRILLED TO THE RECOMMENDED DIAMETER PER MANUFACTURERS REQUIREMENTS USING CARBIDE DRILL BITS MEETING ANSI B212.5-1994.
4. HOLES SHALL BE BRUSHED WITH NYLON BRUSH AND BLOWN CLEAN USING OIL-FREE COMPRESSED AIR A MINIMUM OF TWO TIMES.
5. ALL HOLES SHALL BE FREE OF STANDING WATER BEFORE INSTALLING ANCHORS.
6. EPOXY SHALL HAVE MINIMUM BOND STRENGTH OF 1,600 PSI @ 14 DAYS.

EARTHWORK

1. EARTHWORK MATERIALS SHALL MEET THE FOLLOWING SPECIFICATIONS:

AGGREGATE BASE	TYPE A (MDOT 703.06A)
AGGREGATE SUBBASE	TYPE D (MDOT 703.06C)
WALL BACKFILL	CRUSHED STONE ¾" (MDOT 703.13)
DRAINAGE STONE	CRUSHED STONE 2 INCH (MDOT 703.31)
ORDINARY BORROW	SEE #2 BELOW.

2. ORDINARY BORROW SHALL BE EXISTING GRANULAR SOIL WITH MAXIMUM 4 INCH STONE SUBJECT TO APPROVAL BY THE ENGINEER. ALL DEBRIS OR OTHER DELETERIOUS MATERIALS SHALL BE REMOVED FROM ORDINARY BORROW PRIOR TO REUSE.

STEEL

1. STEEL ANGLE, STRAPS, AND MISCELLANEOUS FABRICATIONS SHALL BE ASTM A36 HOT DIP GALVANIZED AFTER FABRICATION, UNLESS OTHERWISE NOTED.
2. ALL FASTENERS SHALL BE HOT-DIP GALVANIZED OR STAINLESS STEEL.
3. ALL BOLTS SHALL CONFORM TO ASTM A307. MINIMUM SIZE SHALL BE ⅝ INCH UNLESS OTHERWISE NOTED.

HEAVY TIMBER

1. UNLESS OTHERWISE SPECIFIED, ALL TIMBER FRAMING TO BE USED SHALL BE NO. 1 AND BETTER SOUTHERN PINE AS GRADED BY SPIB AND WITH DESIGN VALUES PER NDS 2015.
2. ALL TIMBER SHALL BE NEW AND SUPPLIED WITH NOMINAL DIMENSIONS UNLESS OTHERWISE NOTED.
3. ALL NEW SOUTHERN YELLOW PINE TIMBER MEMBERS TO WHICH THE PUBLIC MAY BE EXPOSED SHALL BE TREATED WITH ALKALINE COPPER QUATERNARY (ACQ) IN ACCORDANCE WITH AWPA & AWPB W/ MINIMUM RETENTION OF 0.60 LBS. PER CUBIC FOOT. ALL OTHER SOUTHERN YELLOW PINE MEMBERS SHALL BE CCA TREATED TO 2.5 PCF RETENTION.
4. ALL EXPOSED EDGES SHALL BE PLANED OR SANDED TO PROVIDE SMOOTH SURFACE FREE OF ROUGH EDGES OR DEFECTS.
5. ALL EXPOSED FASTENERS SHALL BE COUNTERSUNK.
6. DOCK WASHERS SHALL BE PROVIDED BENEATH NUT OR BOLT HEAD OF ALL TIMBER BOLTED CONNECTIONS. TIMBER BOLTS SHALL BE CONSIDERED AN ACCEPTABLE ALTERNATIVE TO HEX HEADED BOLTS WITH DOCK WASHERS.
7. STANDARD WASHERS SHALL BE PERMISSIBLE WHERE CONNECTED PARTS INCLUDE STEEL PLATES, ANGLES, BRACKETS, OR BACKER PLATES.

TIMBER PILES

1. TIMBER PILES SHALL BE TROPICAL GREENHEART AND SHALL CONFORM TO ASTM D25.
2. PROVIDE PROTECTION TO PILE TIP AND BUTT TO AVOID DAMAGE DURING DRIVING.
3. PILES SHALL BE ORDERED MINIMUM 5 FT LONGER THAN TABULATED LENGTHS TO ALLOW FOR INSTALLATION VARIABILITY AND CUTOFF.
4. ALL TIMBER PILES SHALL BE DRIVEN TO THE MINIMUM EMBEDMENT OR CAPACITY CRITERIA INDICATED IN THE PILE SCHEDULE. FENDER PILES MAY BE INSTALLED TO THE REQUIRED DEPTH USING A VIBRATORY HAMMER. IN THE EVENT THAT A VIBRATORY HAMMER IS UNABLE TO ACHIEVE THE MINIMUM REQUIRED EMBEDMENT, THE CONTRACTOR WILL BE RESPONSIBLE FOR COMPLETING FINAL SET USING AN IMPACT HAMMER.
5. GREENHEART PILES SHALL BE BANDED WITH 1½ INCH STAINLESS STEEL UTILITY STRAPPING PRIOR TO CUTOFF. REFER TO DETAIL ON SHEET S-009.

ASPHALT

1. PAVING GRADES SHALL PITCH TO EXISTING STRUCTURES.
2. PAVEMENT SHALL CONSIST OF 4" OF HOT MIX ASPHALT PLACED IN TWO COURSES, SEE DETAIL.
3. CONTRACTOR TO SAW CUT PAVEMENT AT LIMIT OF REMOVAL.
4. CONTRACTOR TO PROVIDE SMOOTH TRANSITIONS BETWEEN NEW AND EXISTING ASPHALT.
5. CONTRACTOR TO SEAL JOINT BETWEEN NEW AND EXISTING ASPHALT WITH BITUMINOUS JOINT SEALANT.

GEOTEXTILE

1. GEOTEXTILE SEPARATION FABRIC SHALL BE MIRAFI FW700 OR EQUIVALENT.
2. OVERLAP ALL SEAMS MINIMUM 2 FT.
3. INSTALL PER MANUFACTURERS RECOMMENDATIONS.

STEEL PIPE PILES

1. STEEL PIPE PILES SHALL CONFORM TO ASTM A252, GRADE 3.
2. ALL PILES SHALL BE SEAMLESS.
3. AN OPEN CUTTING SHOE IS REQUIRED.
4. PIPE PILES SHALL BE COATED WITH FUSION BONDED EPOXY, COLOR BROWN. MINIMUM COATING THICKNESS SHALL BE 18-20 MIL. COATING SHALL EXTEND FROM TOP OF PILE DOWN TO MINIMUM 5-FEET BELOW GRADE.
5. DAMAGE TO ANY STEEL COATING SHALL BE TOUCHED UP BY THE CONTRACTOR USING APPROVED MATERIALS AND METHODS.
6. ALL PILES SHALL BE FILLED TO THE TOP WITH CONCRETE AFTER INSTALLATION. ROCK-SOCKETED PILES SHALL BE CLEANED OUT AND FILLED FOR THEIR ENTIRE LENGTH PRIOR TO CONCRETE FILLING. DRIVEN PILES SHALL BE CLEANED OUT TO MINIMUM 10-FEET BELOW ADJACENT MUDLINE.
7. REFER TO PILE SCHEDULE ON SHEET S-005 FOR ESTIMATED PILE LENGTHS, COATING LENGTHS, SIZES, AND SOCKETING REQUIREMENTS.

TIMBER FLOATS

1. FLOAT MANUFACTURER SHALL SUBMIT SHOP DRAWINGS AND CALCULATIONS SIGNED AND SEALED BY A MAINE LICENSED PROFESSIONAL ENGINEER. MANUFACTURER SHALL BE RESPONSIBLE FOR FINAL DETERMINATION OF FLOAT FRAMING AND DRUM LAYOUT TO MEET BOUYANCY, LOADING, AND ENVIRONMENTAL EXPOSURE REQUIREMENTS IN ACCORDANCE WITH THE SPECIFICATIONS.
2. UNLESS OTHERWISE SPECIFIED, ALL TIMBER TO BE USED SHALL BE NO. 1 AND BETTER SOUTHERN PINE AS GRADED BY SPIB AND WITH DESIGN VALUES PER NFPA NATIONAL DESIGN SPECIFICATION OR THE EQUIVALENT FOR DOUGLAS FIR AS GRADED BY WCLIB AND WWPA.
3. ALL TIMBER SHALL BE NEW AND SUPPLIED WITH NOMINAL DIMENSIONS.
4. ALL TIMBER MEMBERS TO WHICH THE PUBLIC MAY BE EXPOSED SHALL BE TREATED WITH ALKALINE COPPER QUATERNARY (ACQ) IN ACCORDANCE WITH AWPA & AWPB W/ MINIMUM RETENTION OF 0.40 LBS. PER CUBIC FOOT. ALL OTHER SOUTHERN YELLOW PINE MEMBERS SHALL BE CCA TREATED TO 2.5 PCF RETENTION.
5. DECKING SHALL BE NO. 1 SOUTHERN PINE, MINIMUM SIZE 2X6.
6. MISC. HARDWARE: GALVANIZED STEEL PLATES AND ALL BOLTS AND RELATED HARDWARE SHALL BE FASHIONED FROM STEEL AND GALVANIZED AFTER FABRICATION AND IN ACCORDANCE WITH REQUIREMENTS OF ASTM A123, AND/OR A153. BOLTS AND NUTS SHALL CONFORM TO ASTM A307.
7. CONNECTION HARDWARE SHALL BE FABRICATED FROM ASTM-A36 GRADE STEEL WITH MINIMUM THICKNESS ¼".
8. PROVIDE GUIDE/WEARING BRACKETS AT GANGWAY LANDING ON FLOAT 'C' PER DETAIL A ON SHEET S-012. BRACKETS SHALL BE LOCATED IN FIELD TO BE CENTERED ON GANGWAY RANGE OF TRAVEL AT MID-TIDE ELEVATION.
9. TRANSITIONS BETWEEN FLOATING DOCKS SHALL INCLUDE ADA COMPLIANT TRANSITION PLATES ACROSS GAPS AT HINGE LOCATIONS.
10. FLOATING DOCKS SHALL MEET THE FOLLOWING LOADING AND FREEBOARD CRITERIA:

DEAD LOAD	20 INCH FREEBOARD
20 PSF UNIFORM LIVE LOAD	MINIMUM 8 INCH FREEBOARD
40 PSF UNIFORM LIVE LOAD	MINIMUM ZERO FREEBOARD

DEAD LOADS SHALL INCLUDE ALL COMPONENTS AND ATTACHMENTS INCLUDING WEIGHT OF ALUMINUM GANGWAY BEARING ON FLOAT 'C'.

ALUMINUM GANGWAY

1. GANGWAY MANUFACTURER SHALL SUBMIT SHOP DRAWINGS AND CALCULATIONS SIGNED AND SEALED BY A MAINE LICENSED PROFESSIONAL ENGINEER. MANUFACTURER SHALL BE RESPONSIBLE FOR FINAL DETERMINATION OF GANGWAY FRAMING AND CONFIGURATION TO MEET STRUCTURAL, PERFORMANCE, AND ACCESSIBILITY REQUIREMENTS IN ACCORDANCE WITH THE SPECIFICATIONS.
2. GANGWAY SHALL MEET THE FOLLOWING LOADING AND DEFLECTION CRITERIA:
   - DEAD LOAD SHALL CONSIST OF WEIGHT OF THE ENTIRE GANGWAY STRUCTURE PLUS ANY UTILITIES AND ATTACHMENTS.
   - ALLOWABLE STRESSES IN DECK SURFACE, GANGWAY FRAMING, AND MOUNTING COMPONENTS SHALL NOT BE EXCEEDED AT A UNIFORM LIVE LOAD OF 100 PSF.
   - 50 PSF UNIFORM LIVE LOAD MAX. DEFLECTION L/360
   - 100 PSF UNIFORM LIVE LOAD MAX. DEFLECTION NOT TO EXCEED GANGWAY CAMBER
   - ALL HANDRAIL AND POSTS SHALL BE DESIGNED TO WITHSTAND A 200 LB LOAD APPLIED IN ANY DIRECTION OR A 50 LB/FT LOAD APPLIED ALONG THE HANDRAIL LENGTH.
3. GANGWAY HINGES SHALL BE CAPABLE OF TRAVELING FREELY AND WITHOUT BINDING THROUGH THE ENTIRE RANGE OF WATER LEVELS FROM MLLW TO BASE FLOOD ELEVATION PLUS TWO-FEET OF ADDITIONAL ELEVATION IN EITHER DIRECTION.

FOR PERMIT

Attention:
0 1"
If this scale bar does not measure 1" then drawing is not original scale.

DRAFT

Designed:	DJB
Drawn:	JAM
Checked:	BJB
Approved:	BMM
P.E. No:	13033
GEI Project	2203703

GEI Consultants
GEI CONSULTANTS, INC.
5 MILK STREET
PORTLAND, ME 04101
(207)797-8901

UNE
UNIVERSITY OF NEW ENGLAND
11 HILLS BEACH RD.
BIDDEFORD, MAINE

UNIVERSITY OF NEW ENGLAND
MARINE SCIENCE CENTER PIER
11 HILLS BEACH ROAD
BIDDEFORD, YORK COUNTY, MAINE

NO	DATE	ISSUE/REVISION	APP
6	8/14/2024	REVISED PERMIT SET	DJB
5	6/27/2024	REVISED PERMIT SET	DJB
4	9/14/2023	DEP PERMIT SET	DJB
3	6/28/2023	75% DESIGN SUBMISSION	DJB
2	2/15/2023	305 DESIGN SUBMISSION	DJB
1	12/9/2022	15% DESIGN SUB REV	DJB
0	11/11/2022	15% DESIGN SUBMISSION	DJB

SHEET NAME: **GENERAL NOTES**
SHEET NO.: **G-002**

BANNON, DAN \\geiconsultants.com\data\Data_Storage\Working\UNIVERSITY OF NEW ENGLAND\2203703 UNE Marine Science Center Pier\00_CAD\Design\Sheets\2203703-G-002.dwg - 8/14/2024



0 200 400
SCALE, FEET

FOR PERMIT

Attention:
0 1"
If this scale bar does not measure 1" then drawing is not original scale.

DRAFT

Designed:	DJB
Drawn:	JAM
Checked:	BJB
Approved:	BMM
P.E. No:	13033
GEI Project	2203703

GEI Consultants
GEI CONSULTANTS, INC.
5 MILK STREET
PORTLAND, ME 04101
(207)797-8901

UNE
UNIVERSITY OF NEW ENGLAND
11 HILLS BEACH RD.
BIDDEFORD, MAINE

UNIVERSITY OF NEW ENGLAND MARINE SCIENCE CENTER PIER

11 HILLS BEACH ROAD
BIDDEFORD, YORK COUNTY, MAINE

NO	DATE	ISSUE/REVISION	APP
6	8/14/2024	REVISED PERMIT SET	DJB
~~5~~	~~6/27/2024~~	~~REVISED PERMIT SET~~	~~DJB~~
4	9/14/2023	DEP PERMIT SET	DJB
3	6/28/2023	75% DESIGN SUBMISSION	DJB
2	2/15/2023	305 DESIGN SUBMISSION	DJB
1	12/9/2022	15% DESIGN SUB REV	DJB
0	11/11/2022	15% DESIGN SUBMISSION	DJB

SHEET NAME
VICINITY PLAN

SHEET NO.
G-003

BANNON, DAN \\geiconsultants.com\data\Data_Storage\Working\UNIVERSITY OF NEW ENGLAND\2203703 UNE Marine Science Center Pier\00_CAD\Design\Sheets\2203703-G-003.dwg - 8/14/2024

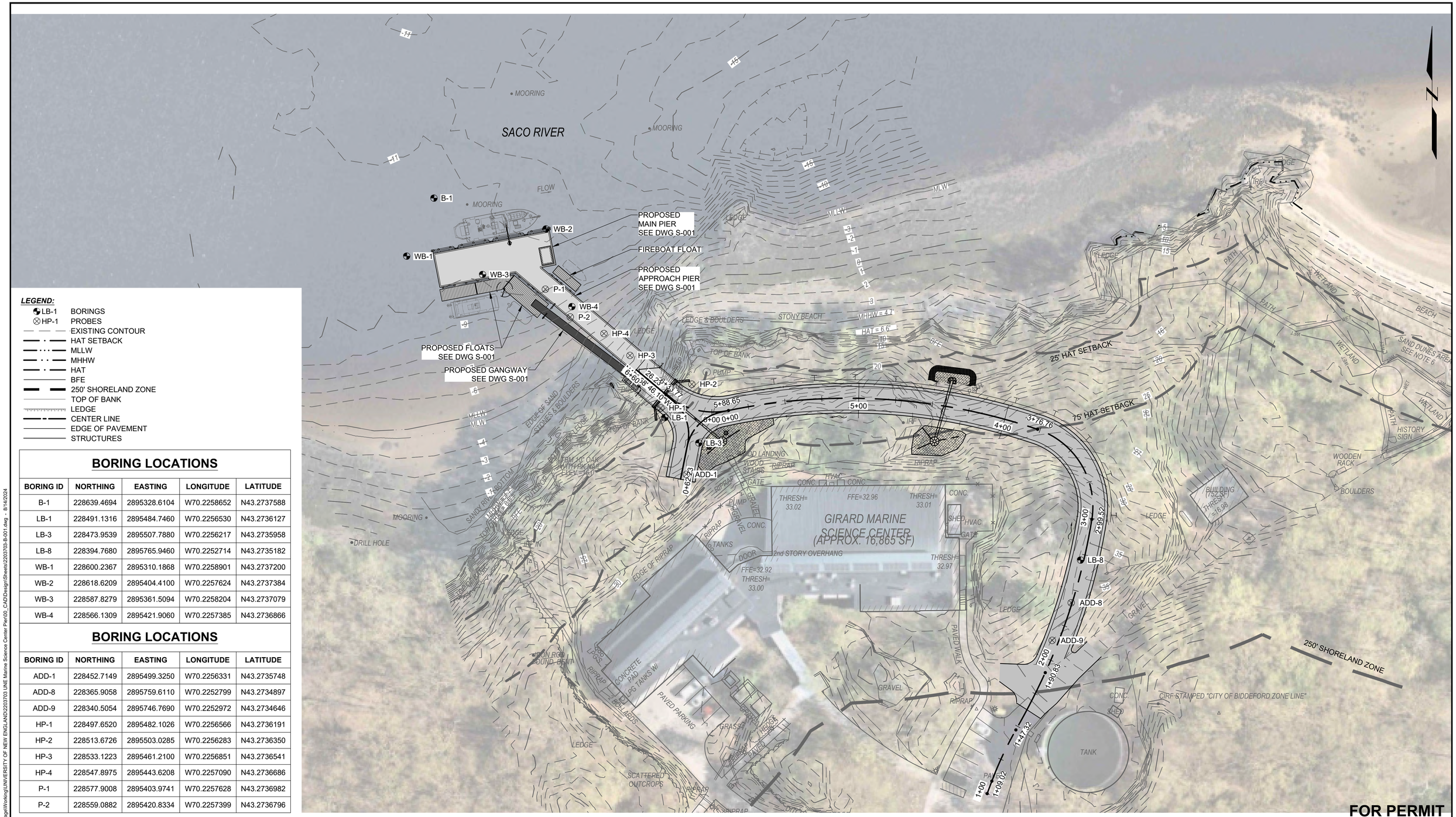

LEGEND:

- LB-1 BORINGS
- HP-1 PROBES
- EXISTING CONTOUR
- HAT SETBACK
- MLLW
- MHHW
- HAT
- BFE
- 250' SHORELAND ZONE
- TOP OF BANK
- LEDGE
- CENTER LINE
- EDGE OF PAVEMENT
- STRUCTURES

BORING LOCATIONS

BORING ID	NORTHING	EASTING	LONGITUDE	LATITUDE
B-1	228639.4694	2895328.6104	W70.2258652	N43.2737588
LB-1	228491.1316	2895484.7460	W70.2256530	N43.2736127
LB-3	228473.9539	2895507.7880	W70.2256217	N43.2735958
LB-8	228394.7680	2895765.9460	W70.2252714	N43.2735182
WB-1	228600.2367	2895310.1868	W70.2258901	N43.2737200
WB-2	228618.6209	2895404.4100	W70.2257624	N43.2737384
WB-3	228587.8279	2895361.5094	W70.2258204	N43.2737079
WB-4	228566.1309	2895421.9060	W70.2257385	N43.2736866

BORING LOCATIONS

BORING ID	NORTHING	EASTING	LONGITUDE	LATITUDE
ADD-1	228452.7149	2895499.3250	W70.2256331	N43.2735748
ADD-8	228365.9058	2895759.6110	W70.2252799	N43.2734897
ADD-9	228340.5054	2895746.7690	W70.2252972	N43.2734646
HP-1	228497.6520	2895482.1026	W70.2256566	N43.2736191
HP-2	228513.6726	2895503.0285	W70.2256283	N43.2736350
HP-3	228533.1223	2895461.2100	W70.2256851	N43.2736541
HP-4	228547.8975	2895443.6208	W70.2257090	N43.2736686
P-1	228577.9008	2895403.9741	W70.2257628	N43.2736982
P-2	228559.0882	2895420.8334	W70.2257399	N43.2736796

ELEVATION	MLLW	NAVD88*
BFE	+19.0	+14.0
HAT	+11.6	+6.6
MHHW	+9.7	+4.7
MHW	+9.3	+4.3
MSL	+4.8	-0.2
MLW	+0.3	-4.7
MLLW	0.0	-5.0

*PROJECT DATUM

0 30 60
SCALE, FEET

Attention:
0 1"
If this scale bar does not measure 1" then drawing is not original scale.

DRAFT

Designed:	DJB
Drawn:	JAM
Checked:	BJB
Approved:	BMM
P.E. No:	13033
GEI Project	2203703

GEI Consultants
GEI CONSULTANTS, INC.
5 MILK STREET
PORTLAND, ME 04101
(207)797-8901

UNE
UNIVERSITY OF NEW ENGLAND
11 HILLS BEACH RD.
BIDDEFORD, MAINE

UNIVERSITY OF NEW ENGLAND MARINE SCIENCE CENTER PIER

11 HILLS BEACH ROAD
BIDDEFORD, YORK COUNTY, MAINE

NO	DATE	ISSUE/REVISION	APP
6	8/14/2024	REVISED PERMIT SET	DJB
5	6/27/2024	REVISED PERMIT SET	DJB
4	9/14/2023	DEP PERMIT SET	DJB
3	6/28/2023	75% DESIGN SUBMISSION	DJB
2	2/15/2023	305 DESIGN SUBMISSION	DJB
1	12/9/2022	15% DESIGN SUB REV	DJB
0	11/11/2022	15% DESIGN SUBMISSION	DJB

SHEET NAME
BORING LOCATION PLAN

SHEET NO.
B-001

FOR PERMIT

BANNON, DAN \\gisconsultants.com\data\Data_Storage\Working\UNIVERSITY OF NEW ENGLAND\2203703 UNE Marine Science Center Pier\00_CAD\Design\Sheets\2203703-B-001.dwg - 8/14/2024

TEST BORING LOG

GZA GeoEnvironmental, Inc. *Engineers and Scientists*

University of New England
Marine Science Center Pier
Biddeford, Maine

EXPLORATION NO.: B-1
SHEET: 1 of 3
PROJECT NO: 09.0025897.00
REVIEWED BY:

Logged By: B. Cardali
Drilling Co.: New England Boring
Foreman: Brad Enos

Type of Rig: Barge
Rig Model:
Drilling Method: Rod Prob

Boring Location: See Plan
Ground Surface Elev. (ft.): -10.6
Final Boring Depth (ft.): 65.8
Date Start - Finish: 11/9/2015 - 11/10/2015

H. Datum:
V. Datum: NAVD 88

Hammer Type: Safety
Hammer Weight (lb.): 140
Hammer Fall (in.): 30
Auger or Casing O.D./I.D Dia (in.):

Sampler Type: SS
Sampler O.D. (in.): 2.0
Sampler Length (in.): 24
Rock Core Size: NQ

Groundwater Depth (ft.)

Date	Time	Water Depth	Stab. Time

Depth (ft)	Casing Blows/ Core Rate	Sample No.	Sample Depth (ft.)	Sample Pen. (in)	Sample Rec. (in)	Sample Blows (per 6 in.)	SPT Value	Sample Description and Identification (Modified Burmister Procedure)	Remarks	Field Test Data	Depth (ft.)	Stratum Description	Elev. (ft.)
0													
	3	S-1	0-2	24	5	1 2	3	S-1: Very loose, brown, fine to coarse SAND, trace Silt.					
	4					1 2							
	6												
	9												
	16												
5	5	S-2	5-7	24	4	3 2	4	S-2: Loose, brown, fine to coarse SAND, trace Silt.					
	6					2 2							
	9												
	11												
	10												
10	8	S-3	10-12	24	3	1 2	4	S-3: Loose, brown, fine to coarse SAND, trace Silt.				SAND	
	6					2 2							
	8												
	13												
	19												
15	7	S-4	15-17	24	8	2 2	4	S-4: Loose, brown, fine to coarse SAND, trace Silt.					
	15					2 4							
	28												
	35												
	31										19.5		-29.1
20	OPEN	S-5	20-22	24	17	7 3	4	S-5: Medium Stiff, gray, Silty CLAY, little fine Sand.		1			
						1 2							
25		S-6	25-27	24	24	2 1	3	S-6: Soft, gray, Silty CLAY, little fine Sand.				SILTY CLAY	
						2 1							
30													

REMARKS

1 - 4" casing installed to 20.0' below mudline (bml), then wash ahead to 51.0' bml.

See Log Key for exploration of sample description and identification procedures. Stratification lines represent approximate boundaries between soil and bedrock types. Actual transitions may be gradual. Water level readings have been made at the times and under the conditions stated. Fluctuations of groundwater may occur due to other factors than those present at the times the measurements were made.

Exploration No.: B-1

GZA TEMPLATE TEST BORING, 12/7/2015, 1:02:01 PM

TEST BORING LOG

GZA GeoEnvironmental, Inc. *Engineers and Scientists*

University of New England
Marine Science Center Pier
Biddeford, Maine

EXPLORATION NO.: B-1
SHEET: 2 of 3
PROJECT NO: 09.0025897.00
REVIEWED BY:

Logged By: B. Cardali
Drilling Co.: New England Boring
Foreman: Brad Enos

Type of Rig: Barge
Rig Model:
Drilling Method: Rod Probe

Boring Location: See Plan
Ground Surface Elev. (ft.): -10.6
Final Boring Depth (ft.): 65.8
Date Start - Finish: 11/9/2015 - 11/10/2015

H. Datum:
V. Datum: NAVD 88

Hammer Type: Safety
Hammer Weight (lb.): 140
Hammer Fall (in.): 30
Auger or Casing O.D./I.D Dia (in.):

Sampler Type: SS
Sampler O.D. (in.): 2.0
Sampler Length (in.): 24
Rock Core Size: NQ

Groundwater Depth (ft.)

Date	Time	Water Depth	Stab. Time

Depth (ft)	Casing Blows/ Core Rate	Sample No.	Sample Depth (ft.)	Sample Pen. (in)	Sample Rec. (in)	Sample Blows (per 6 in.)	SPT Value	Sample Description and Identification (Modified Burmister Procedure)	Remarks	Field Test Data	Depth (ft.)	Stratum Description	Elev. (ft.)
35													
40		S-7	40-42	24	24	WOR	0	S-7: Very soft, gray, Silty CLAY, trace fine Sand.				SILTY CLAY	
						WOR							
						WOH							
						WOH							
45													
50													
	16	S-8	51-53	24	8	18 6	21	S-8: Medium dense, gray, fine to coarse SAND, some Gravel, trace Silty Clay.		2	51		-41.6
	13					15 29							
	30												
	26												
55	27												
	38	S-9	56-58	24	5	10 19	46	S-9: Dense, gray, GRAVEL, some fine to coarse Sand, trace Silty Clay.				GLACIAL TILL	
	24					27 24							
	29												
	9												
60													

REMARKS

2 - Advanced 3" casing to 61.6' bml to core bedrock.

See Log Key for exploration of sample description and identification procedures. Stratification lines represent approximate boundaries between soil and bedrock types. Actual transitions may be gradual. Water level readings have been made at the times and under the conditions stated. Fluctuations of groundwater may occur due to other factors than those present at the times the measurements were made.

Exploration No.: B-1

GZA TEMPLATE TEST BORING, 12/7/2015, 1:02:01 PM

TEST BORING LOG

GZA GeoEnvironmental, Inc. *Engineers and Scientists*

University of New England
Marine Science Center Pier
Biddeford, Maine

EXPLORATION NO.: B-1
SHEET: 3 of 3
PROJECT NO: 09.0025897.00
REVIEWED BY:

Logged By: B. Cardali
Drilling Co.: New England Boring
Foreman: Brad Enos

Type of Rig: Barge
Rig Model:
Drilling Method: Rod Probe

Boring Location: See Plan
Ground Surface Elev. (ft.): -10.6
Final Boring Depth (ft.): 65.8
Date Start - Finish: 11/9/2015 - 11/10/2015

H. Datum:
V. Datum: NAVD 88

Hammer Type: Safety
Hammer Weight (lb.): 140
Hammer Fall (in.): 30
Auger or Casing O.D./I.D Dia (in.):

Sampler Type: SS
Sampler O.D. (in.): 2.0
Sampler Length (in.): 24
Rock Core Size: NQ

Groundwater Depth (ft.)

Date	Time	Water Depth	Stab. Time

Depth (ft)	Casing Blows/ Core Rate	Sample No.	Sample Depth (ft.)	Sample Pen. (in)	Sample Rec. (in)	Sample Blows (per 6 in.)	SPT Value	Sample Description and Identification (Modified Burmister Procedure)	Remarks	Field Test Data	Depth (ft.)	Stratum Description	Elev. (ft.)
60												GLACIAL TILL	
	75										61.6		-73.2
		C-1	61.6-61.7	32	32			C-1: Hard, fresh, fine grained, gray, GNEISS. Joints are very close to closely spaced, moderately dipping, planar, rough, fresh to discolored. RQD = 31%	3			GNEISS	
65		C-2	64.3-65.8	18	18			C-2: Hard, fresh, fine grained, gray, GNEISS. Joints are extremely close to closely spaced, moderately dipping to high angle, planar, rough to smooth, fresh to discolored. RQD = 0%			65.8		-79.4
								End of exploration at 65.8 feet.					
70													
75													
80													
85													
90													

REMARKS

3 - Casing refusal at 61.6' bml. Set up to core.

See Log Key for exploration of sample description and identification procedures. Stratification lines represent approximate boundaries between soil and bedrock types. Actual transitions may be gradual. Water level readings have been made at the times and under the conditions stated. Fluctuations of groundwater may occur due to other factors than those present at the times the measurements were made.

Exploration No.: B-1

GZA TEMPLATE TEST BORING, 12/7/2015, 1:02:01 PM

2015 BORING B-1

TEST BORING LOG

GZA GeoEnvironmental, Inc. *Engineers and Scientists*

University of New England
Marine Science Center Pier
Biddeford, Maine

EXPLORATION NO.: P-1
SHEET: 1 of 2
PROJECT NO: 09.0025897.00
REVIEWED BY:

Logged By: B Cardali
Drilling Co.: New England Boring
Foreman: Brad Enos

Type of Rig: Barge
Rig Model:
Drilling Method: Rod Prob

Boring Location: See Plan
Ground Surface Elev. (ft.): -10.2
Final Boring Depth (ft.): 52.3
Date Start - Finish: 11/10/2015 - 11/10/2015

H. Datum:
V. Datum: NAVD 88

Hammer Type: Safety
Hammer Weight (lb.): 300
Hammer Fall (in.): 24
Auger or Casing O.D./I.D Dia (in.):

Sampler Type:
Sampler O.D. (in.):
Sampler Length (in.):
Rock Core Size:

Groundwater Depth (ft.)

Date	Time	Water Depth	Stab. Time

Depth (ft)	Casing Blows/ Core Rate	Sample No.	Sample Depth (ft.)	Sample Pen. (in)	Sample Rec. (in)	Sample Blows (per 6 in.)	SPT Value	Sample Description and Identification (Modified Burmister Procedure)	Remarks	Field Test Data	Depth (ft.)	Stratum Description	Elev. (ft.)
0													
	3												
	6												
	6												
	6												
5	7											POSSIBLE SAND	
	15												
	16												
	14												
	8												
10	7												
	8												
	13												
	37												
	19												
15	15												
	13												
	12												
	22												
	14												
20	12												
	25												
	21												
	18												
25	17												
30													

REMARKS

1 - Possible transition to Silty Clay at approximately 17.0' below mudline (bml) (El. -26.9'), based on increased driving resistance to advance probe.

See Log Key for exploration of sample description and identification procedures. Stratification lines represent approximate boundaries between soil and bedrock types. Actual transitions may be gradual. Water level readings have been made at the times and under the conditions stated. Fluctuations of groundwater may occur due to other factors than those present at the times the measurements were made.

Exploration No.: P-1

GZA TEMPLATE TEST BORING, 12/7/2015, 1:02:02 PM

TEST BORING LOG

GZA GeoEnvironmental, Inc. *Engineers and Scientists*

University of New England
Marine Science Center Pier
Biddeford, Maine

EXPLORATION NO.: P-1
SHEET: 2 of 2
PROJECT NO: 09.0025897.00
REVIEWED BY:

Logged By: B Cardali
Drilling Co.: New England Boring
Foreman: Brad Enos

Type of Rig: Barge
Rig Model:
Drilling Method: Rod Probe

Boring Location: See Plan
Ground Surface Elev. (ft.): -10.2
Final Boring Depth (ft.): 52.3
Date Start - Finish: 11/10/2015 - 11/10/2015

H. Datum:
V. Datum: NAVD 88

Hammer Type: Safety
Hammer Weight (lb.): 300
Hammer Fall (in.): 24
Auger or Casing O.D./I.D Dia (in.):

Sampler Type:
Sampler O.D. (in.):
Sampler Length (in.):
Rock Core Size:

Groundwater Depth (ft.)

Date	Time	Water Depth	Stab. Time

Depth (ft)	Casing Blows/ Core Rate	Sample No.	Sample Depth (ft.)	Sample Pen. (in)	Sample Rec. (in)	Sample Blows (per 6 in.)	SPT Value	Sample Description and Identification (Modified Burmister Procedure)	Remarks	Field Test Data	Depth (ft.)	Stratum Description	Elev. (ft.)
30	24												
	18												
	19												
	20												
	28												
35	26											POSSIBLE SILTY CLAY	
	24												
	30												
	34												
	52												
40	37									2	42		-42.0
	33												
	34												
	54												
	46												
45	55											POSSIBLE GLACIAL TILL	
	50												
	50												
	50/3"									3	52.3		-42.5
50													
55													
60													

REMARKS

2 - Possible transition to Glacial Till at approximately 42.0' bml (El. -51.9').
3 - Probe refusal at 52.3' bml (El. -62.2').

See Log Key for exploration of sample description and identification procedures. Stratification lines represent approximate boundaries between soil and bedrock types. Actual transitions may be gradual. Water level readings have been made at the times and under the conditions stated. Fluctuations of groundwater may occur due to other factors than those present at the times the measurements were made.

Exploration No.: P-1

GZA TEMPLATE TEST BORING, 12/7/2015, 1:02:04 PM

2015 PROBE P-1

TEST BORING LOG

GZA GeoEnvironmental, Inc. *Engineers and Scientists*

University of New England
Marine Science Center Pier
Biddeford, Maine

EXPLORATION NO.: P-2
SHEET: 1 of 2
PROJECT NO: 09.0025897.00
REVIEWED BY:

Logged By: B Cardali
Drilling Co.: New England Boring
Foreman: Brad Enos

Type of Rig: Barge
Rig Model:
Drilling Method: Rod Probe

Boring Location: See Plan
Ground Surface Elev. (ft.): -7.3
Final Boring Depth (ft.): 54.2
Date Start - Finish: 11/10/2015 - 11/10/2015

H. Datum:
V. Datum: NAVD 88

Hammer Type: Safety
Hammer Weight (lb.): 300
Hammer Fall (in.): 24
Auger or Casing O.D./I.D Dia (in.):

Sampler Type:
Sampler O.D. (in.):
Sampler Length (in.):
Rock Core Size:

Groundwater Depth (ft.)

Date	Time	Water Depth	Stab. Time

Depth (ft)	Casing Blows/ Core Rate	Sample No.	Sample Depth (ft.)	Sample Pen. (in)	Sample Rec. (in)	Sample Blows (per 6 in.)	SPT Value	Sample Description and Identification (Modified Burmister Procedure)	Remarks	Field Test Data	Depth (ft.)	Stratum Description	Elev. (ft.)
0	1												
	1												
	1												
	3												
	6												
5	4												
	3												
	8												
	22												
	9												
10	5											POSSIBLE SAND	
	2												
	3												
	5												
	4												
15	5												
	5												
	7												
	5												
	10												
20	18												
	19												
	21												
	15												
	13												
25	30												
	29												
	26												
30													

REMARKS

1 - Upon retrieval of probe rods, bottom 30' of rods was bent at an angle approximately 30-45 degrees off of the vertical indicating possible sloping rock at approximately 30.0' bml (El. 37.3').

See Log Key for exploration of sample description and identification procedures. Stratification lines represent approximate boundaries between soil and bedrock types. Actual transitions may be gradual. Water level readings have been made at the times and under the conditions stated. Fluctuations of groundwater may occur due to other factors than those present at the times the measurements were made.

Exploration No.: P-2

GZA TEMPLATE TEST BORING, 12/7/2015, 1:02:04 PM

TEST BORING LOG

GZA GeoEnvironmental, Inc. *Engineers and Scientists*

University of New England
Marine Science Center Pier
Biddeford, Maine

EXPLORATION NO.: P-2
SHEET: 2 of 2
PROJECT NO: 09.0025897.00
REVIEWED BY:

Logged By: B Cardali
Drilling Co.: New England Boring
Foreman: Brad Enos

Type of Rig: Barge
Rig Model:
Drilling Method: Rod Probe

Boring Location: See Plan
Ground Surface Elev. (ft.): -7.3
Final Boring Depth (ft.): 54.2
Date Start - Finish: 11/10/2015 - 11/10/2015

H. Datum:
V. Datum: NAVD 88

Hammer Type: Safety
Hammer Weight (lb.): 300
Hammer Fall (in.): 24
Auger or Casing O.D./I.D Dia (in.):

Sampler Type:
Sampler O.D. (in.):
Sampler Length (in.):
Rock Core Size:

Groundwater Depth (ft.)

Date	Time	Water Depth	Stab. Time

Depth (ft)	Casing Blows/ Core Rate	Sample No.	Sample Depth (ft.)	Sample Pen. (in)	Sample Rec. (in)	Sample Blows (per 6 in.)	SPT Value	Sample Description and Identification (Modified Burmister Procedure)	Remarks	Field Test Data	Depth (ft.)	Stratum Description	Elev. (ft.)
30	23												
	19												
	37												
	39												
	34												
35	42												
	31												
	40												
	36												
	41												
40	38												
	46												
	43												
	55												
	52												
45	40												
	37												
	38												
	41												
	65												
50	91												
	78												
	50												
	75												
	100/2"									2	54.2		-61.5
55													
60													

REMARKS

2 - Probe refusal at 54.2' bml (El. -61.5').

See Log Key for exploration of sample description and identification procedures. Stratification lines represent approximate boundaries between soil and bedrock types. Actual transitions may be gradual. Water level readings have been made at the times and under the conditions stated. Fluctuations of groundwater may occur due to other factors than those present at the times the measurements were made.

Exploration No.: P-2

GZA TEMPLATE TEST BORING, 12/7/2015, 1:02:04 PM

2015 PROBE P-2

ELEVATION	MLLW	NAVD88*
BFE	+19.0	+14.0
HAT	+11.6	+6.6
MHHW	+9.7	+4.7
MHW	+9.3	+4.3
MSL	+4.8	-0.2
MLW	+0.3	-4.7
MLLW	0.0	-5.0

*PROJECT DATUM

Attention:
0 1"
If this scale bar does not measure 1" then drawing is not original scale.

DRAFT

Designed:	DJB
Drawn:	JAM
Checked:	BJB
Approved:	BMM
P.E. No:	13033
GEI Project	2203703

GEI Consultants
GEI CONSULTANTS, INC.
5 MILK STREET
PORTLAND, ME 04101
(207)797-8901

UNIVERSITY OF NEW ENGLAND
11 HILLS BEACH RD.
BIDDEFORD, MAINE

UNIVERSITY OF NEW ENGLAND MARINE SCIENCE CENTER PIER

11 HILLS BEACH ROAD
BIDDEFORD, YORK COUNTY, MAINE

NO	DATE	ISSUE/REVISION	APP
6	8/14/2024	REVISED PERMIT SET	DJB
5	6/27/2024	REVISED PERMIT SET	DJB
4	9/14/2023	DEP PERMIT SET	DJB
3	6/28/2023	75% DESIGN SUBMISSION	DJB
2	2/15/2023	305 DESIGN SUBMISSION	DJB
1	12/9/2022	15% DESIGN SUB REV	DJB
0	11/11/2022	15% DESIGN SUBMISSION	DJB

SHEET NAME
BORING LOGS (SHEET 1 OF 3)

SHEET NO.
B-002

FOR PERMIT

BANNON, DAN \\geiconsultants.com\data\Data_Storage\Working\UNIVERSITY OF NEW ENGLAND\2203703 UNE Marine Science Center Pier\00_CAD\Design\Sheets\2203703-B-002.dwg - 8/14/2024

BANNON, DAN \\geiconsultants.com\data\Data_Storage\Working\UNIVERSITY OF NEW ENGLAND\2203703 UNE Marine Science Center Pier\00_CAD\Design\Sheets\2203703-B-003.dwg - 8/14/2024

2022 BORING WB-1

BORING WB-1 — PAGE 1 of 3

BORING INFORMATION

NORTHING (ft): 228,600 | EASTING (ft): 2,895,310
GROUND SURFACE EL. (ft): -10.1 | DATE START/END: 12/12/2022 - 12/13/2022
VERT./HORIZ. DATUMS: NAVD 88/NAD83 ME West Zone | DRILLING COMPANY: New England Boring
TOTAL DEPTH (ft): 70.0 | DRILLER NAME: B. Enos
LOGGED BY: K. Gleichauf | RIG TYPE: CME 21

DRILLING INFORMATION

HAMMER TYPE: Safety Hammer - rope and cathead | CASING I.D./O.D.: 4 inch/ 4.5 inch | CORE BARREL TYPE: NX
AUGER I.D./O.D.: NA / NA | DRILL ROD O.D.: NM | CORE BARREL I.D./O.D.: 1.8 inch / 3 inch
DRILLING METHOD: Drive and Wash/Open Hole
WATER LEVEL DEPTHS (ft): water boring

ABBREVIATIONS: Pen. = Penetration Length; Rec. = Recovery Length; RQD = Rock Quality Designation = Length of Sound Cores>4 in / Pen.,%; WOR = Weight of Rods; WOH = Weight of Hammer; S = Split Spoon Sample; C = Core Sample; U = Undisturbed Sample; SC = Sonic Core; DP = Direct Push Sample; HSA = Hollow-Stem Auger; Qp = Pocket Penetrometer Strength; Sv = Pocket Torvane Shear Strength; LL = Liquid Limit; PI = Plasticity Index; PID = Photoionization Detector; I.D./O.D.= Inside Diameter/Outside Diameter; NA, NM = Not Applicable, Not Measured; Blows per 6 in.: 140-lb hammer falling 30 inches to drive a 2-inch-O.D. split spoon sampler.

Elev. (ft)	Depth (ft)	Sample No.	Depth (ft)	Pen./ Rec. (in)	Blows per 6 in. or RQD	Drilling Remarks/ Field Test Data	Layer Name	Soil and Rock Description
		S1	0 to 2	24/2	WOR-WOH/18"		SAND/SILT	S1: NARROWLY GRADED GRAVEL WITH SAND (GP); ~80% coarse gravel (one piece), ~20% fine to coarse sand. Dark Gray.
	5					Sand and shells in wash 0-5'.		
		S2	5.5 to 7.5	24/9	5-3-4-6			S2: WIDELY GRADED SAND (SW); ~95% fine to coarse sand, ~5% nonplastic fines. gray. shells.
-20	10					Sand and wood in wash 5.5-10.5'.		
		S3	10.5 to 12.5	24/8	1-1-3-4			S3: WIDELY GRADED SAND (SW); Similar to S2.
	15	S4	15.5 to 17.5	24/9	3-4-2-WOH			S4: WIDELY GRADED SAND (SW); Similar to S2. pieces of wood.
-30	20	S5	20.5 to 22.5	24/24	2-1-1-2	Qp= 0.5 tsf (0-3") Sv= 2.5 tsf (0-3") Qp< 0.25 tsf (3-24") Sv= 1.5 tsf (3-24")	CLAY	S5: LEAN CLAY (CL); ~95% low plasticity fines, ~5% fine sand. Gray. Shells (0-10"). Sand seam at 20".

NOTES:

PROJECT NAME: UNE Marine Science Center Pier
CITY/STATE: Biddeford, Maine
GEI PROJECT NUMBER: 2203703
GEI Consultants

GEI WOBURN STD 5-NORTH-EAST-LAYER NAME 2203703 UNE PIER TYPED LOGS.GPJ 1/19/23

BORING WB-1 — PAGE 2 of 3

NORTHING (ft): 228,600 | EASTING (ft): 2,895,310
GROUND SURFACE EL. (ft): -10.1 | DATE START/END: 12/12/2022 - 12/13/2022
VERT./HORIZ. DATUMS: NAVD 88/NAD83 ME West Zone | DRILLING COMPANY: New England Boring

Elev. (ft)	Depth (ft)	Sample No.	Depth (ft)	Pen./ Rec. (in)	Blows per 6 in. or RQD	Drilling Remarks/ Field Test Data	Layer Name	Soil and Rock Description
	25	S6	25.5 to 27.5	24/24	WOR-WOH/18"	Drove 4" casing to 25.5'. Drilled open hole 25.5-45.5'. Drilled with 3" casing from 45.5' to top of rock.Qp< 0.25 tsf Sv= 1.5 tsf	CLAY	S6: LEAN CLAY (CL); ~95% low plasticity fines, ~5% fine sand. Gray.
-40	30	S7	30.5 to 32.5	24/24	WOR/18"-2	Qp< 0.25 tsf Sv= 1.5 tsf		S7: LEAN CLAY (CL); Similar to S6.
	35	S8	35.5 to 37.5	24/24	WOR/18"-WOH	Qp< 0.25 tsf Sv= 1.5 tsf		S8: LEAN CLAY (CL); Similar to S6.
-50	40	S9	40.5 to 42.5	24/24	WOR/18"-WOH	Qp< 0.25 tsf Sv= 1.5 tsf		S9: LEAN CLAY (CL); Similar to S6.
	45	S10	45.5 to 47.5	24/24	WOR/18"-3	Qp= 0.5 tsf Sv= 1.5 tsf		S10: SANDY LEAN CLAY (CL); ~70% low plasticity fines, ~30% fine sand. Gray. Layered sand and clay.
-60	50					Casing hard driving starting at 49.5'.	TILL	
		S11	50.5 to 52.5	24/4	14-14-16-22			S11: CLAYEY GRAVEL WITH SAND (GC); ~50% fine to coarse gravel, ~30% fine to coarse sand, ~20% low plasticity fines. Gray.
	55							

NOTES:

PROJECT NAME: UNE Marine Science Center Pier
CITY/STATE: Biddeford, Maine
GEI PROJECT NUMBER: 2203703
GEI Consultants

GEI WOBURN STD 5-NORTH-EAST-LAYER NAME 2203703 UNE PIER TYPED LOGS.GPJ 1/19/23

BORING WB-1 — PAGE 3 of 3

NORTHING (ft): 228,600 | EASTING (ft): 2,895,310
GROUND SURFACE EL. (ft): -10.1 | DATE START/END: 12/12/2022 - 12/13/2022
VERT./HORIZ. DATUMS: NAVD 88/NAD83 ME West Zone | DRILLING COMPANY: New England Boring

Elev. (ft)	Depth (ft)	Sample No.	Depth (ft)	Pen./ Rec. (in)	Blows per 6 in. or RQD	Drilling Remarks/ Field Test Data	Layer Name	Soil and Rock Description
		S12	55.5 to 56.4	11/6	37-50/5"		TILL	S11: WIDELY GRADED GRAVEL WITH SAND AND CLAY (GW-GC); ~60% fine to coarse gravel, ~30% fine to coarse sand, ~10% low plasticity fines. Gray.
		C1	56.4 to 59.3	35/35	0	Core Times (min/ft): 4-6-6/0.9' C1 jammed at 2.9'.	ROCK	C1: GNEISS, Dark Gray with white banding, hard to med. hard. Slightly weathered (0-24"), highly weathered (24-35"). Joints at 75 to 90 degrees. Highly fractured.
-70	60	C2	59.3 to 60.8	18/18	0	Core Times (min/ft): 4/0.5'-1/0.5'-4/0.5' C2 jammed at 0.5, 1.5'.		C2: GNEISS. Similar to C1. Highly weathered (0-10"), moderately weathered (10-18"). dissolved quartz bands.
		C3	60.8 to 65.8	60/60	71	Core Times (min/ft): 7/1.2'-2/0.8'-4-4/0.7'-2/0.3'-6 C3 jammed at 1.2, 3.7'.		C3: GNEISS, hard. Fresh throughout. joints spaced 1-19" at 0 to 60 degrees.
	65	C4	65.8 to 70	50/36	24	Core Times (min/ft): 6-5-5-3/1.2'		C4: GNEISS. Fresh (0-12"). Moderately weathered and highly fractured (12-36").
-80	70							Bottom of boring at depth 70 ft.
	75							
-90	80							
	85							

NOTES:

PROJECT NAME: UNE Marine Science Center Pier
CITY/STATE: Biddeford, Maine
GEI PROJECT NUMBER: 2203703
GEI Consultants

GEI WOBURN STD 5-NORTH-EAST-LAYER NAME 2203703 UNE PIER TYPED LOGS.GPJ 1/19/23

2022 BORING WB-1

2022 BORING WB-2

BORING WB-2 — PAGE 1 of 3

BORING INFORMATION

NORTHING (ft): 228,619 | EASTING (ft): 2,895,396
GROUND SURFACE EL. (ft): -11.6 | DATE START/END: 12/7/2022 - 12/8/2022
VERT./HORIZ. DATUMS: NAVD 88/NAD83 ME West Zone | DRILLING COMPANY: New England Boring
TOTAL DEPTH (ft): 68.4 | DRILLER NAME: B. Enos
LOGGED BY: K. Gleichauf | RIG TYPE: CME 21

DRILLING INFORMATION

HAMMER TYPE: Safety Hammer - rope and cathead | CASING I.D./O.D.: 4 inch/ 4.5 inch | CORE BARREL TYPE: NX
AUGER I.D./O.D.: NA / NA | DRILL ROD O.D.: NM | CORE BARREL I.D./O.D.: 1.8 inch / 3 inch
DRILLING METHOD: Drive and Wash/Open Hole
WATER LEVEL DEPTHS (ft): water boring

ABBREVIATIONS: Pen. = Penetration Length; Rec. = Recovery Length; RQD = Rock Quality Designation = Length of Sound Cores>4 in / Pen.,%; WOR = Weight of Rods; WOH = Weight of Hammer; S = Split Spoon Sample; C = Core Sample; U = Undisturbed Sample; SC = Sonic Core; DP = Direct Push Sample; HSA = Hollow-Stem Auger; Qp = Pocket Penetrometer Strength; Sv = Pocket Torvane Shear Strength; LL = Liquid Limit; PI = Plasticity Index; PID = Photoionization Detector; I.D./O.D.= Inside Diameter/Outside Diameter; NA, NM = Not Applicable, Not Measured; Blows per 6 in.: 140-lb hammer falling 30 inches to drive a 2-inch-O.D. split spoon sampler.

Elev. (ft)	Depth (ft)	Sample No.	Depth (ft)	Pen./ Rec. (in)	Blows per 6 in. or RQD	Drilling Remarks/ Field Test Data	Layer Name	Soil and Rock Description
		S1	0 to 2	24/0	WOH/12"-2-2		SAND/SILT	S1: No recovery. Redrove 3" spoon. S1 (redrive): WIDELY GRADED SAND (SW); ~95% fine to coarse sand, ~5% nonplastic fines. Gray. Shells.
	5	S2	4 to 6	24/5	6-4-4-9			S2: WIDELY GRADED SAND (SW); Similar to S1.
-20	10	S3	9 to 11	24/0	1-2-3-4			S3: No recovery. Redrove 3" spoon. S3 (redrive): No recovery. Probable loose sand. Split spoon returned clean. Sand and shells in wash.
	15	S4	14 to 16	24/0	1-2-2-3			S4: No Recovery. Redrove 3" spoon. S4 (redrive): NARROWLY GRADED GRAVEL (GP); ~100% coarse gravel. Probable wash material, gravel is clean.
-30	20	S5	19 to 21	24/11	10-7-6-28			S5: SANDY SILT (ML); ~ 60% nonplastic fines, ~40% fine sand. Gray. Traces of wood. Organic odor.
						Clay in wash. Driller noted reduced resistance.	CLAY	

NOTES:

PROJECT NAME: UNE Marine Science Center Pier
CITY/STATE: Biddeford, Maine
GEI PROJECT NUMBER: 2203703
GEI Consultants

GEI WOBURN STD 5-NORTH-EAST-LAYER NAME 2203703 UNE PIER TYPED LOGS.GPJ 1/19/23

BORING WB-2 — PAGE 2 of 3

NORTHING (ft): 228,619 | EASTING (ft): 2,895,396
GROUND SURFACE EL. (ft): -11.6 | DATE START/END: 12/7/2022 - 12/8/2022
VERT./HORIZ. DATUMS: NAVD 88/NAD83 ME West Zone | DRILLING COMPANY: New England Boring

Elev. (ft)	Depth (ft)	Sample No.	Depth (ft)	Pen./ Rec. (in)	Blows per 6 in. or RQD	Drilling Remarks/ Field Test Data	Layer Name	Soil and Rock Description
	25	S6	24 to 26	24/24	WOH/18"-1	Qp<0.25 tsf Sv=0.05 tsf	CLAY	S6: LEAN CLAY (CL); ~100% low plasticity fines. Gray.
-40	30	S7	29 to 31	24/24	WOR-WOH/12"-3	Qp<0.25 tsf Sv=0.05 tsf		S7: LEAN CLAY (CL); ~95% low plasticity fines, ~5% fine sand. Gray. Sand seam in tip.
						Drove 4" casing to 32'. Drilled open hole 32-44'. Drilled with 3" casing 44' to top of rock.		
	35	S8	34 to 36	24/24	WOR/12"-WOH/12"	Qp<0.25 tsf Sv=0.05 tsf		S8: LEAN CLAY (CL); Similar to S7.
-50	40	S9	39 to 41	24/24	WOH/12"-3-3			S9 (0-9"): SANDY SILT (ML); ~60% nonplastic fines, ~40% fine sand. Gray. S9 (9-13"): LEAN CLAY (CL): Similar to S8. S9 (13-19"): SANDY SILT (ML); Similar to (0-9"). S9 (19-24") LEAN CLAY (CL); Similar to S8.
	45	S10	44 to 46	24/16	10-14-8-5		TILL	S10: SILTY SAND (SM); ~75% fine sand, ~25% nonplastic fines. Gray. More silt (0-8") more sand (8-16").
-60	50	S11	49 to 51	24/22	6-10-13-33			S11: NARROWLY GRADED SAND with Silt (SP-SM); ~90% fine sand, ~10% nonplastc fines. Gray (0-10"), Gray/brown (10-22"). One piece of gravel at 18".
	55	S12	54 to 56	24/15	10-7-10-18			S12: NARROWLY GRADED SAND with Silt (SP-SM); Similar to S11. Gravel seam (3-5").

NOTES:

PROJECT NAME: UNE Marine Science Center Pier
CITY/STATE: Biddeford, Maine
GEI PROJECT NUMBER: 2203703
GEI Consultants

GEI WOBURN STD 5-NORTH-EAST-LAYER NAME 2203703 UNE PIER TYPED LOGS.GPJ 1/19/23

BORING WB-2 — PAGE 3 of 3

NORTHING (ft): 228,619 | EASTING (ft): 2,895,396
GROUND SURFACE EL. (ft): -11.6 | DATE START/END: 12/7/2022 - 12/8/2022
VERT./HORIZ. DATUMS: NAVD 88/NAD83 ME West Zone | DRILLING COMPANY: New England Boring

Elev. (ft)	Depth (ft)	Sample No.	Depth (ft)	Pen./ Rec. (in)	Blows per 6 in. or RQD	Drilling Remarks/ Field Test Data	Layer Name	Soil and Rock Description
							TILL	
-70	60	C1	59 to 63.8	57/57	17	Core Times (min/ft): 2-2-2/0.7'-1/0.3'-4-5/0.6' C1 jammed at 2.7, 4.6'.	ROCK	C1: GNEISS, hard, dark gray with white banding. Highly weathered (0-19"), slightly weathered (19-57"). joints spaced 0 to 5" at 30 to 75 degrees. weathering occurs in quartzy seams.
	65	C2	63.8 to 68.4	55/55	13	Core Times (min/ft): 2-2-1/0.6'-2-5 C2 jammed at 2.6, 4.6'.		C2: GNEISS. Similar to C1. Slightly weathered (0-22"), highly weathered (22-31"), slightly weathered (31-55"). Weathering in quartz bands.
-80	70							Bottom of boring at depth 68.4 ft.
	75							
-90	80							
	85							

NOTES:

PROJECT NAME: UNE Marine Science Center Pier
CITY/STATE: Biddeford, Maine
GEI PROJECT NUMBER: 2203703
GEI Consultants

GEI WOBURN STD 5-NORTH-EAST-LAYER NAME 2203703 UNE PIER TYPED LOGS.GPJ 1/19/23

2022 BORING WB-2

ELEVATION	MLLW	NAVD88*
BFE	+19.0	+14.0
HAT	+11.6	+6.6
MHHW	+9.7	+4.7
MHW	+9.3	+4.3
MSL	+4.8	-0.2
MLW	+0.3	-4.7
MLLW	0.0	-5.0

*PROJECT DATUM

Attention: 0 1" If this scale bar does not measure 1" then drawing is not original scale.

DRAFT

FOR PERMIT

Designed:	DJB
Drawn:	JAM
Checked:	BJB
Approved:	BMM
P.E. No:	13033
GEI Project	2203703

GEI Consultants
GEI CONSULTANTS, INC.
5 MILK STREET
PORTLAND, ME 04101
(207)797-8901

UNE
UNIVERSITY OF NEW ENGLAND
11 HILLS BEACH RD.
BIDDEFORD, MAINE

UNIVERSITY OF NEW ENGLAND MARINE SCIENCE CENTER PIER
11 HILLS BEACH ROAD
BIDDEFORD, YORK COUNTY, MAINE

NO	DATE	ISSUE/REVISION	APP
6	8/14/2024	REVISED PERMIT SET	DJB
5	6/27/2024	REVISED PERMIT SET	DJB
4	9/14/2023	DEP PERMIT SET	DJB
3	6/28/2023	75% DESIGN SUBMISSION	DJB
2	2/15/2023	305 DESIGN SUBMISSION	DJB
1	12/9/2022	15% DESIGN SUB REV	DJB
0	11/11/2022	15% DESIGN SUBMISSION	DJB

SHEET NAME: **BORING LOGS (SHEET 2 OF 3)**

SHEET NO.: **B-003**

BANNON, DAN \\geiconsultants.com\data\Data_Storage\Working\UNIVERSITY OF NEW ENGLAND\2203703 UNE Marine Science Center Pier\00_CAD\Design\Sheets\2203703-B-004.dwg - 8/14/2024

2022 BORING WB-3

BORING WB-3 — PAGE 1 of 3

BORING INFORMATION
NORTHING (ft): 228,591 **EASTING (ft):** 2,895,359
GROUND SURFACE EL. (ft): -10.2 **DATE START/END:** 12/9/2022 - 12/9/2022
VERT./HORIZ. DATUMS: NAVD 88/NAD83 ME West Zone **DRILLING COMPANY:** New England Boring
TOTAL DEPTH (ft): 63.4 **DRILLER NAME:** B. Enos
LOGGED BY: K. Gleichauf **RIG TYPE:** CME 21

DRILLING INFORMATION
HAMMER TYPE: Safety Hammer - rope and cathead **CASING I.D./O.D.:** 4 inch/ 4.5 inch **CORE BARREL TYPE:** NX
AUGER I.D./O.D.: NA / NA **DRILL ROD O.D.:** NM **CORE BARREL I.D./O.D.:** 1.8 inch / 3 inch
DRILLING METHOD: Drive and Wash/Open Hole
WATER LEVEL DEPTHS (ft): water boring

ABBREVIATIONS: Pen. = Penetration Length; Rec. = Recovery Length; RQD = Rock Quality Designation = Length of Sound Cores>4 in / Pen.,%; WOR = Weight of Rods; WOH = Weight of Hammer; S = Split Spoon Sample; C = Core Sample; U = Undisturbed Sample; SC = Sonic Core; DP = Direct Push Sample; HSA = Hollow-Stem Auger; Qp = Pocket Penetrometer Strength; Sv = Pocket Torvane Shear Strength; LL = Liquid Limit; PI = Plasticity Index; PID = Photoionization Detector; I.D./O.D.= Inside Diameter/Outside Diameter; NA, NM = Not Applicable, Not Measured; Blows per 6 in.: 140-lb hammer falling 30 inches to drive a 2-inch-O.D. split spoon sampler.

Sample No.	Depth (ft)	Pen./Rec. (in)	Blows per 6 in. or RQD	Drilling Remarks/Field Test Data	Layer Name	Soil and Rock Description
S1	0 to 2	24/5	WOH/18"-1		SAND/SILT	S1: SILTY SAND (SM); ~80% fine to coarse sand, ~20% nonplastic/organic fines. Gray. wood. organic odor.
S2	3 to 5	24/9	2-1-2-3		SAND/SILT	S2: WIDELY GRADED SAND (SW); ~100% fine to coarse sand. Gray. organic odor.
S3	8 to 10	24/12	1-2-3-4		SAND/SILT	S3: WIDELY GRADED SAND (SW); Similar to S2. Shells.
S4	13 to 15	24/7	1-2-3-6		SAND/SILT	S4: NARROWLY GRADED SAND (SP); ~100% coarse sand. Gray. shells.
S5	18 to 20	24/12	9-4-8-8		SAND/SILT	S5: SILTY SAND (SM); ~65% fine sand, ~25% nonplastic fines, ~10% fine to coarse gravel. wood. shells.
S6	23 to	24/24	WOR-	clay in wash at 22'. Qp<0.25 tsf Sv=0.05 tsf	CLAY	S6: LEAN CLAY (CL); ~95% low plasticity fines, ~5% fine sand. Gray. Sand seams (8-9"), (19-20").

Elevation scale: -20 (depth 10), -30 (depth 20). Depth marks: 5, 10, 15, 20.

NOTES:
PROJECT NAME: UNE Marine Science Center Pier
CITY/STATE: Biddeford, Maine
GEI PROJECT NUMBER: 2203703
GEI Consultants

GEI WOBURN STD 5-NORTH-EAST-LAYER NAME 2203703 UNE PIER TYPED LOGS.GPJ 1/19/23

BORING WB-3 — PAGE 2 of 3

NORTHING (ft): 228,591 **EASTING (ft):** 2,895,359
GROUND SURFACE EL. (ft): -10.2 **DATE START/END:** 12/9/2022 - 12/9/2022
VERT./HORIZ. DATUMS: NAVD 88/NAD83 ME West Zone **DRILLING COMPANY:** New England Boring

Sample No.	Depth (ft)	Pen./Rec. (in)	Blows per 6 in. or RQD	Drilling Remarks/Field Test Data	Layer Name	Soil and Rock Description
	25		1/12"-1		CLAY	
S7	28 to 30	24/24	WOR/12"-WOH-1	drove 4" casing to 28'. Drilled open hole 28-48. Drilled with 3" casing 48' to top of rock.Qp<0.25 tsf Sv=0.05 tsf	CLAY	S7: LEAN CLAY (CL); Similar to S6.
S8	33 to 35	24/24	WOR/12"-WOH-2	Qp<0.25 tsf Sv=0.05 tsf	CLAY	S8: LEAN CLAY (CL) Similar to S6.
S9	38 to 40	24/24	WOR/12"-WOH-2	Qp<0.25 tsf Sv=0.05 tsf	CLAY	S9: LEAN CLAY (CL); Similar to S6. Fine sand seams (6-8"), (20-24").
S10	43 to 45	24/24	WOR-1/12"-4		CLAY	S10 (0-6"): LEAN CLAY (CL); Similar to S6. S10(6-24"): CLAYEY SAND (SC); ~75% fine sand, ~25% low plasticity fines. Gray. Brown (20-24").
S11	48 to 50	24/5	45-29-14-15		TILL	S11: CLAYEY SAND with Gravel (SC); ~50% fine sand, ~30% fine to coarse gravel up to 1.25", ~20% low plasticity fines. Gray.
S12	53 to 53.3	4/4	50/4"	casing refusal at 53.3'.Core Times (min/ft): 4-2/0.2' C1 jammed at 1.2'.	ROCK	S12: NARROWLY GRADED GRAVEL with Sand (GP); ~75% coarse gravel, ~20% fine to coarse sand, ~5% nonplastic fines. Gray/Brown.
C1	53.3	15/15	33		ROCK	C1: GNEISS, hard, dark gray. Slightly weathered. joints spaced 0-5" at 60 to 90 degrees.
C2	to	60/57	88		ROCK	

Elevation scale: -40 (depth 30), -50 (depth 40), -60 (depth 50). Depth marks: 25, 30, 35, 40, 45, 50, 55.

NOTES:
PROJECT NAME: UNE Marine Science Center Pier
CITY/STATE: Biddeford, Maine
GEI PROJECT NUMBER: 2203703
GEI Consultants

GEI WOBURN STD 5-NORTH-EAST-LAYER NAME 2203703 UNE PIER TYPED LOGS.GPJ 1/19/23

BORING WB-3 — PAGE 3 of 3

NORTHING (ft): 228,591 **EASTING (ft):** 2,895,359
GROUND SURFACE EL. (ft): -10.2 **DATE START/END:** 12/9/2022 - 12/9/2022
VERT./HORIZ. DATUMS: NAVD 88/NAD83 ME West Zone **DRILLING COMPANY:** New England Boring

Sample No.	Depth (ft)	Pen./Rec. (in)	Blows per 6 in. or RQD	Drilling Remarks/Field Test Data	Layer Name	Soil and Rock Description
	54.6 54.6 to 59.6			Core Times (min/ft): 2-2-3-3-4	ROCK	C2: GNEISS, hard, dark gray with white banding. fresh throughout. joints spaced 3-12" at 60 degrees. calcite seam horizontal at 48".
C3	59.6 to 63.4	45/48	31	Core Times (min/ft):2-3-2/0.2'-3-2/0.6' C3 jammed at 2.2'.	ROCK	C3: GNEISS, hard, dark gray. fresh throughout. joints spaced 1-5" at 60 degrees. Horizontal calcite seam at 15". Highly fractured (23-25").
						Bottom of boring at depth 63.4 ft.

Elevation scale: -70 (depth 60), -80 (depth 70), -90 (depth 80). Depth marks: 60, 65, 70, 75, 80, 85.

NOTES:
PROJECT NAME: UNE Marine Science Center Pier
CITY/STATE: Biddeford, Maine
GEI PROJECT NUMBER: 2203703
GEI Consultants

GEI WOBURN STD 5-NORTH-EAST-LAYER NAME 2203703 UNE PIER TYPED LOGS.GPJ 1/19/23

2022 BORING WB-4

BORING WB-4 — PAGE 1 of 2

BORING INFORMATION
NORTHING (ft): 228,566 **EASTING (ft):** 2,895,422
GROUND SURFACE EL. (ft): -8.3 **DATE START/END:** 12/6/2022 - 12/6/2022
VERT./HORIZ. DATUMS: NAVD 88/NAD83 ME West Zone **DRILLING COMPANY:** New England Boring
TOTAL DEPTH (ft): 46.7 **DRILLER NAME:** B. Enos
LOGGED BY: K. Gleichauf **RIG TYPE:** CME 21

DRILLING INFORMATION
HAMMER TYPE: Safety Hammer - rope and cathead **CASING I.D./O.D.:** 4 inch/ 4.5 inch **CORE BARREL TYPE:** NX
AUGER I.D./O.D.: NA / NA **DRILL ROD O.D.:** NM **CORE BARREL I.D./O.D.:** 1.8 inch / 3 inch
DRILLING METHOD: Drive and Wash/Open Hole
WATER LEVEL DEPTHS (ft): water boring

ABBREVIATIONS: Pen. = Penetration Length; Rec. = Recovery Length; RQD = Rock Quality Designation = Length of Sound Cores>4 in / Pen.,%; WOR = Weight of Rods; WOH = Weight of Hammer; S = Split Spoon Sample; C = Core Sample; U = Undisturbed Sample; SC = Sonic Core; DP = Direct Push Sample; HSA = Hollow-Stem Auger; Qp = Pocket Penetrometer Strength; Sv = Pocket Torvane Shear Strength; LL = Liquid Limit; PI = Plasticity Index; PID = Photoionization Detector; I.D./O.D.= Inside Diameter/Outside Diameter; NA, NM = Not Applicable, Not Measured; Blows per 6 in.: 140-lb hammer falling 30 inches to drive a 2-inch-O.D. split spoon sampler.

Sample No.	Depth (ft)	Pen./Rec. (in)	Blows per 6 in. or RQD	Drilling Remarks/Field Test Data	Layer Name	Soil and Rock Description
S1	0 to 2	24/4	WOR/12"-WOH/12"		SAND/SILT	S1: SILTY SAND (SM); ~60% fine to coarse sand, ~35% organic fines, ~5% fine gravel. Gray. Shells. Wood. Organic odor.
S2	5 to 7	24/4	1-1-1/12"	Casing increased resistance at 7.5'.	SAND/SILT	S2: SILTY SAND (SM); Similar to S1.
S3	10 to 12	24/15	9-4-1/12"		SAND/SILT	S3: SANDY SILT (ML); ~60% nonplastic fines, ~40% fine to coarse sand. Gray. Shells. (0-7") mostly fine sand, (7-15") fine to coarse sand. Organic odor.
S4	15 to 17	24/0	WOH-1/12"-1		SAND/SILT	S4: No recovery. Redrove 3" spoon. S4 (redrive): SANDY SILT (ML); Similar to S3. One ~2.5" piece of gravel on top. Wood. Shells.
S5	20 to 22	24/24	1/24"	Qp<0.25 tsf Sv=0.05 tsf	CLAY	S5: LEAN CLAY (CL); ~95% low plasticity fines, ~5% fine sand. Gray.

Elevation scale: -10, -20 (depth 10), -30. Depth marks: 5, 10, 15, 20.

NOTES:
PROJECT NAME: UNE Marine Science Center Pier
CITY/STATE: Biddeford, Maine
GEI PROJECT NUMBER: 2203703
GEI Consultants

GEI WOBURN STD 5-NORTH-EAST-LAYER NAME 2203703 UNE PIER TYPED LOGS.GPJ 1/19/23

BORING WB-4 — PAGE 2 of 2

NORTHING (ft): 228,566 **EASTING (ft):** 2,895,422
GROUND SURFACE EL. (ft): -8.3 **DATE START/END:** 12/6/2022 - 12/6/2022
VERT./HORIZ. DATUMS: NAVD 88/NAD83 ME West Zone **DRILLING COMPANY:** New England Boring

Sample No.	Depth (ft)	Pen./Rec. (in)	Blows per 6 in. or RQD	Drilling Remarks/Field Test Data	Layer Name	Soil and Rock Description
S6	25 to 27	24/4	1-1-2-4	Qp<0.25 tsf Sv=0.05 tsf	CLAY	S6: LEAN CLAY (CL); Similar to S5.
S7	30 to 32	24/24	5-2-2-1	Qp<0.25 tsf Sv=0.05 tsf	CLAY	S7: LEAN CLAY (CL); Similar to S5. Some gravel seams.
S8	35 to 36.7	20/9	WOR/18"-50/2"	Qp<0.25 tsf Sv=0.05 tsf	CLAY	S8: LEAN CLAY (CL); Similar to S5.
C1	36.7 to 39.7	36/31	14	Core Times (min/ft): 4-6-6 C1 jammed at 3'.	ROCK	C1: GNEISS, hard, dark gray/green. Slightly weathered. Joints spaced 0-5" at 0-90 degrees.
C2	39.7 to 42.4	32/37	94	Core Times (min/ft): 3-6-4/0.7'	ROCK	C2: GNEISS. Similar to C1. Joints spaced 1-18".
C3	42.4 to 43.2	9/9	0	Core Times (min/ft): 5/0.7'	ROCK	C3: GNEISS. Similar to C1. Highly fractured.
C4	43.1 to 44.7	19/19	26	Core Times (min/ft): 5-5/0.6'	ROCK	C4: GNEISS, hard, dark gray/black with white banding. Slightly weathered. Joints spaced 0-5" at 75 degrees.
C5	44.7 to 46.7	24/24	38	Core Times (min/ft): 5-8	ROCK	C5: GNEISS. Similar to C4.
						Bottom of boring at depth 46.7 ft.

Elevation scale: -40, -50, -60. Depth marks: 25, 30, 35, 40, 45, 50, 55.

NOTES:
PROJECT NAME: UNE Marine Science Center Pier
CITY/STATE: Biddeford, Maine
GEI PROJECT NUMBER: 2203703
GEI Consultants

GEI WOBURN STD 5-NORTH-EAST-LAYER NAME 2203703 UNE PIER TYPED LOGS.GPJ 1/19/23

2023 BORING LB-1

BORING LB-1 — PAGE 1 of 1

BORING INFORMATION
LOCATION: Proposed Pier Near Shore
GROUND SURFACE EL. (ft): NM **DATE START/END:** 3/9/2023 - 3/9/2023
VERTICAL DATUM: **DRILLING COMPANY:** New England Boring
TOTAL DEPTH (ft): 8.5 **DRILLER NAME:** Mike M.
LOGGED BY: D. Pelletier **RIG TYPE:** M1 ATV

DRILLING INFORMATION
HAMMER TYPE: Manual **CASING I.D./O.D.:** 4 inch / NA **CORE BARREL TYPE:**
AUGER I.D./O.D.: NA / NA **DRILL ROD O.D.:** NM **CORE BARREL I.D./O.D.** NA / NA
DRILLING METHOD: Drive and Wash
WATER LEVEL DEPTHS (ft): Not measured

ABBREVIATIONS: Pen. = Penetration Length; Rec. = Recovery Length; RQD = Rock Quality Designation = Length of Sound Cores>4 in / Pen.,%; WOR = Weight of Rods; WOH = Weight of Hammer; S = Split Spoon Sample; C = Core Sample; U = Undisturbed Sample; SC = Sonic Core; DP = Direct Push Sample; HSA = Hollow-Stem Auger; Qp = Pocket Penetrometer Strength; Sv = Pocket Torvane Shear Strength; LL = Liquid Limit; PI = Plasticity Index; PID = Photoionization Detector; I.D./O.D. = Inside Diameter/Outside Diameter; NA, NM = Not Applicable, Not Measured; Blows per 6 in.: 140-lb hammer falling 30 inches to drive a 2-inch-O.D. split spoon sampler.

Sample No.	Depth (ft)	Pen./Rec. (in)	Blows per 6 in. or RQD	Drilling Remarks/Field Test Data	Layer Name	Soil and Rock Description
S1	0 to 2	24/4	3-3-5-13			S1: SANDY ORGANIC SOIL (OL), 60% nonplastic fines, 40% fine sand, dark brown, organic topsoil.
S2	2 to 2.2	2/2	50/0.25	Ledge at 2.2 ft. Switch to Drive and Wash. Rollerbit to 3 ft.		S2: WIDELY GRADED GRAVEL WITH SAND (GP), 85% angular gravel, 10% fine to coarse sand, 5% nonplastic fines, dark gray (WEATHERED BEDROCK).
C1	3 to 7	48/40	10			C1: GNEISS, hard, metamorphic, fine-grained, joints slightly to moderately weathered, close, some cavaties throughout, gray. RQD 10% MPF 10-11-12-15
C2	7 to 8.5	18/16	50			C2: GNEISS, hard, metamorphic, fine-grained, joints slightly to moderately weathered, very close except 0-9 inches one piece, gray. RQD 50% MPF 18-11
						Finished hole at 5.5 ft. coring (8.5 ft. depth) due to time constraints.

Depth marks: 5, 10, 15, 20.

NOTES:
PROJECT NAME: UNE Marine Science Center Pier
CITY/STATE: Biddeford, ME
GEI PROJECT NUMBER: 2203703
GEI Consultants

GEI WOBURN STD 1-LOCATION-LAYER NAME UNE BORING LOGS.GPJ 4/3/23

2023 BORING LB-3

BORING LB-3 — PAGE 1 of 1

BORING INFORMATION
LOCATION: Near Stairway
GROUND SURFACE EL. (ft): NM **DATE START/END:** 3/9/2023 - 3/9/2023
VERTICAL DATUM: **DRILLING COMPANY:** New England Boring
TOTAL DEPTH (ft): 1.2 **DRILLER NAME:** Mike M.
LOGGED BY: D. Pelletier **RIG TYPE:** M1 ATV

DRILLING INFORMATION
HAMMER TYPE: Manual **CASING I.D./O.D.:** 4 inch / NA **CORE BARREL TYPE:**
AUGER I.D./O.D.: NA / NA **DRILL ROD O.D.:** NM **CORE BARREL I.D./O.D.** NA / NA
DRILLING METHOD: Drive and Wash
WATER LEVEL DEPTHS (ft): Not measured

ABBREVIATIONS: Pen. = Penetration Length; Rec. = Recovery Length; RQD = Rock Quality Designation = Length of Sound Cores>4 in / Pen.,%; WOR = Weight of Rods; WOH = Weight of Hammer; S = Split Spoon Sample; C = Core Sample; U = Undisturbed Sample; SC = Sonic Core; DP = Direct Push Sample; HSA = Hollow-Stem Auger; Qp = Pocket Penetrometer Strength; Sv = Pocket Torvane Shear Strength; LL = Liquid Limit; PI = Plasticity Index; PID = Photoionization Detector; I.D./O.D. = Inside Diameter/Outside Diameter; NA, NM = Not Applicable, Not Measured; Blows per 6 in.: 140-lb hammer falling 30 inches to drive a 2-inch-O.D. split spoon sampler.

Sample No.	Depth (ft)	Pen./Rec. (in)	Blows per 6 in. or RQD	Drilling Remarks/Field Test Data	Layer Name	Soil and Rock Description
S1	0 to 1.2	14/6	2-8-50/2"			S1: SANDY ORGANIC SOIL (OL), 60% nonplastic fines, 40% fine sand, dark brown, organic topsoil.
						Bottom of boring at depth 1.2 ft.

Depth marks: 5, 10, 15, 20.

NOTES:
PROJECT NAME: UNE Marine Science Center Pier
CITY/STATE: Biddeford, ME
GEI PROJECT NUMBER: 2203703
GEI Consultants

GEI WOBURN STD 1-LOCATION-LAYER NAME UNE BORING LOGS.GPJ 4/3/23

FOR PERMIT

ELEVATION	MLLW	NAVD88*
BFE	+19.0	+14.0
HAT	+11.6	+6.6
MHHW	+9.7	+4.7
MHW	+9.3	+4.3
MSL	+4.8	-0.2
MLW	+0.3	-4.7
MLLW	0.0	-5.0

*PROJECT DATUM

Attention:
0 1"
If this scale bar does not measure 1" then drawing is not original scale.

DRAFT

Designed:	DJB
Drawn:	JAM
Checked:	BJB
Approved:	BMM
P.E. No:	13033
GEI Project	2203703

GEI Consultants
GEI CONSULTANTS, INC.
5 MILK STREET
PORTLAND, ME 04101
(207)797-8901

UNE
UNIVERSITY OF NEW ENGLAND
11 HILLS BEACH RD.
BIDDEFORD, MAINE

UNIVERSITY OF NEW ENGLAND MARINE SCIENCE CENTER PIER
11 HILLS BEACH ROAD
BIDDEFORD, YORK COUNTY, MAINE

NO	DATE	ISSUE/REVISION	APP
6	8/14/2024	REVISED PERMIT SET	DJB
5	6/27/2024	REVISED PERMIT SET	DJB
4	9/14/2023	DEP PERMIT SET	DJB
3	6/28/2023	75% DESIGN SUBMISSION	DJB
2	2/15/2023	305 DESIGN SUBMISSION	DJB
1	12/9/2022	15% DESIGN SUB REV	DJB
0	11/11/2022	15% DESIGN SUBMISSION	DJB

SHEET NAME
BORING LOGS (SHEET 3 OF 3)

SHEET NO.
B-004

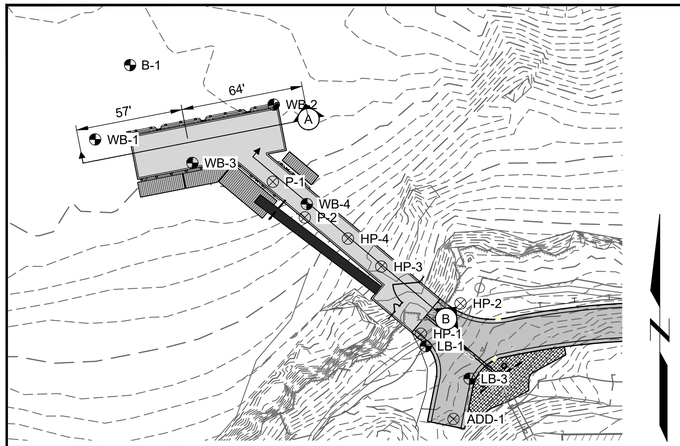

KEY PLAN
SCALE: 1" = 40'

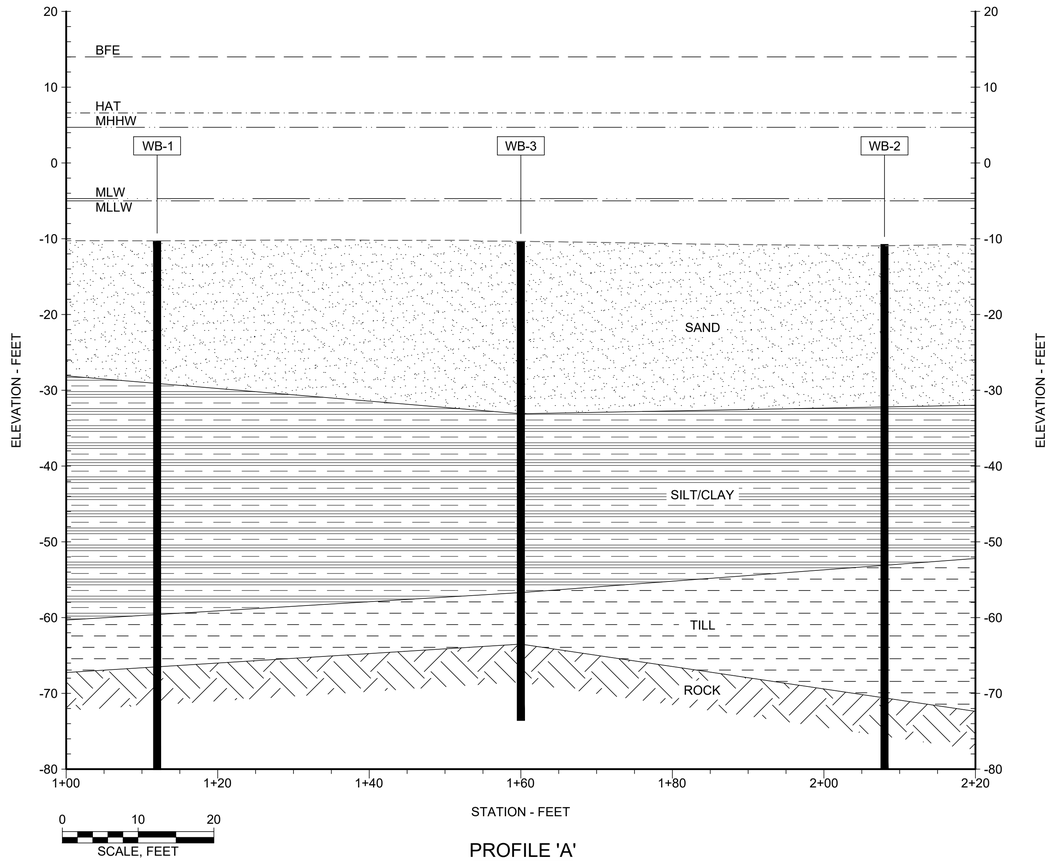

PROFILE 'A'
SCALE: 1" = 10'

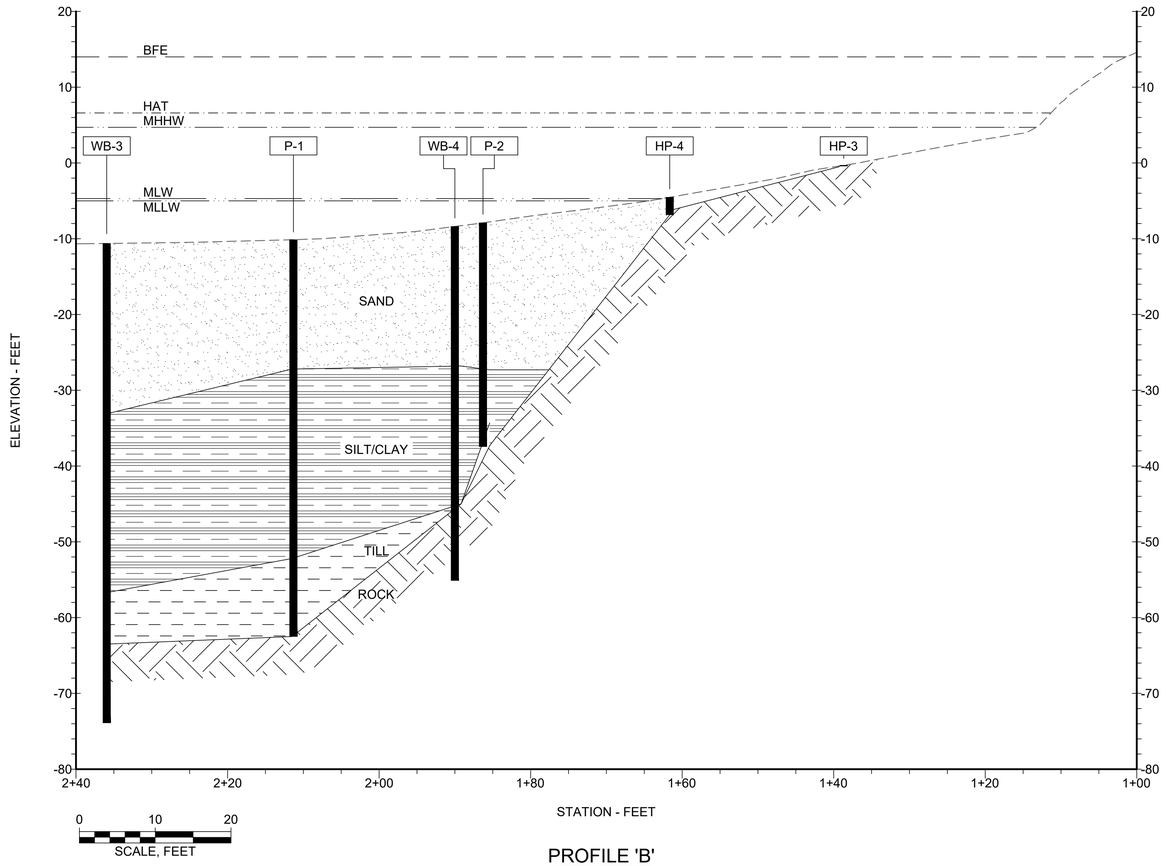

PROFILE 'B'
SCALE: 1" = 10'

FOR PERMIT

ELEVATION	MLLW	NAVD88*
BFE	+19.0	+14.0
HAT	+11.6	+6.6
MHHW	+9.7	+4.7
MHW	+9.3	+4.3
MSL	+4.8	-0.2
MLW	+0.3	-4.7
MLLW	0.0	-5.0

*PROJECT DATUM

Attention:
0 1"
If this scale bar does not measure 1" then drawing is not original scale.

DRAFT

Designed:	DJB
Drawn:	JAM
Checked:	BJB
Approved:	BMM
P.E. No:	13033
GEI Project	2203703

GEI Consultants
GEI CONSULTANTS, INC.
5 MILK STREET
PORTLAND, ME 04101
(207)797-8901

UNIVERSITY OF NEW ENGLAND
11 HILLS BEACH RD.
BIDDEFORD, MAINE

UNIVERSITY OF NEW ENGLAND MARINE SCIENCE CENTER PIER

11 HILLS BEACH ROAD
BIDDEFORD, YORK COUNTY, MAINE

NO	DATE	ISSUE/REVISION	APP
6	8/14/2024	REVISED PERMIT SET	DJB
5	6/27/2024	REVISED PERMIT SET	DJB
4	9/14/2023	DEP PERMIT SET	DJB
3	6/28/2023	75% DESIGN SUBMISSION	DJB
2	2/15/2023	305 DESIGN SUBMISSION	DJB
1	12/9/2022	15% DESIGN SUB REV	DJB
0	11/11/2022	15% DESIGN SUBMISSION	DJB

SHEET NAME
INTERPRETIVE SUBSURFACE PROFILE

SHEET NO.
B-005

BANNON, DAN \\geiconsultants.com\data\Data_Storage\Working\UNIVERSITY OF NEW ENGLAND\2203703 UNE Marine Science Center Pier\00_CAD\Design\Sheets\2203703-B-005.dwg - 8/14/2024



FOR PERMIT

LEGEND:

- EXISTING CONTOUR
- HAT SETBACK
- MLLW
- MHHW
- HAT
- BFE
- 250' SHORELAND ZONE
- TOP OF BANK
- LEDGE
- STRUCTURES

SURVEY AND PROPERTY NOTES:

1. LOCUS PARCEL IS DEPICTED ON CITY OF BIDDEFORD, TAX MAP 52, LOT 4 AND IS LOCATED IN THE INSTITUTIONAL (IN) ZONE. A PORTION OF THE SITE IS LOCATED IN THE LIMITED RESIDENTIAL (LR) SHORELAND OVERLAY DISTRICT.
2. THE RECORD OWNER IS THE UNIVERSITY OF NEW ENGLAND, BY DEED DATED APRIL 18, 1962, RECORDED IN THE YORK COUNTY REGISTRY OF DEEDS IN BOOK 1484, PAGE 0145.
3. UPLAND TOPOGRAPHY AND BASE SURVEY INFORMATION DEPICTED HEREON ARE BASED ON THE FOLLOWING SURVEYS:
   - "TOPOGRAPHIC SURVEY, MARINE SCIENCE CENTER, UNIVERSITY OF NEW ENGLAND" BY OWEN HASKELL, INC. DATED DEC. 13, 2022.
   - "TOPOGRAPHIC SURVEY AT MARINE SCIENCE CENTER" BY STATEWIDE SURVEYS, INC., DATED MAY 4, 2015.
4. HYDROGRAPHIC DATA DEPICTED HEREON IS BASED ON 2022 SURVEY BY OWEN HASKELL SURVEY.
5. FEDERAL CHANNEL LIMITS ARE DEPICTED BASED ON THE PLAN. "SACO RIVER, SACE AND BIDDEFORD, MAINE, CONDITION SURVEY" PUBLISHED BY THE U.S. ARMY CORPS OF ENGINEERS, DATED JULY 3, 2021.
6. HORIZONTAL COORDINATES ARE BASED ON NAD83 MAINE STATE PLANE WEST ZONE-1801 AND ARE EXPRESSED IN FEET. ELEVATIONS ARE BASED ON NAVD88 VERTICAL DATUM.
7. UTILITY INFORMATION DEPICTED HEREON IS BASED ON FEBRUARY 2023 UTILITY LOCATION SURVEY PERFORMED BY BLOOD HOUND, LLC UNDERGROUND UTILITY LOCATORS AND MAY NOT NECESSARILY REPRESENT ALL EXISTING UTILITIES. CONTACT DIG SAFE (1-888-DIG-SAFE) AND VERIFY EXISTING UTILITIES PRIOR TO ANY CONSTRUCTION OR EXCAVATION.
8. PORTIONS OF THE PROPERTY ARE DEPICTED AS BEING IN A SPECIAL FLOOD HAZARD AREA BASED ON FEMA PRELIMINARY FIRM 23031C0459G DATED APRIL 14, 2017. THE SITE IS LOCATED IN A VE ZONE HAVING BASE FLOOD ELEVATION OF 14 FT NAVD88.
9. SUBSURFACE INFORMATION IS BASED ON EXPLORATIONS PERFORMED IN 2015 AND 2022 CONSISTING OF BORINGS, PROBES, AND TEST PITS. REFER TO SHEETS B-001 - B-005 FOR SUBSURFACE INFORMATION.
10. BENCHMARKS:

0 30 60
SCALE, FEET

ELEVATION	MLLW	NAVD88*
BFE	+19.0	+14.0
HAT	+11.6	+6.6
MHHW	+9.7	+4.7
MHW	+9.3	+4.3
MSL	+4.8	-0.2
MLW	+0.3	-4.7
MLLW	0.0	-5.0

*PROJECT DATUM

Attention:
0 1"
If this scale bar does not measure 1" then drawing is not original scale.

DRAFT

Designed:	DJB
Drawn:	JAM
Checked:	BJB
Approved:	BMM
P.E. No:	13033
GEI Project	2203703

GEI Consultants
GEI CONSULTANTS, INC.
5 MILK STREET
PORTLAND, ME 04101
(207)797-8901

UNE
UNIVERSITY OF NEW ENGLAND
11 HILLS BEACH RD.
BIDDEFORD, MAINE

UNIVERSITY OF NEW ENGLAND MARINE SCIENCE CENTER PIER

11 HILLS BEACH ROAD
BIDDEFORD, YORK COUNTY, MAINE

NO	DATE	ISSUE/REVISION	APP
6	8/14/2024	REVISED PERMIT SET	DJB
5	6/27/2024	REVISED PERMIT SET	DJB
4	9/14/2023	DEP PERMIT SET	DJB
3	6/28/2023	75% DESIGN SUBMISSION	DJB
2	2/15/2023	305 DESIGN SUBMISSION	DJB
1	12/9/2022	15% DESIGN SUB REV	DJB
0	11/11/2022	15% DESIGN SUBMISSION	DJB

SHEET NAME
EXISTING CONDITIONS PLAN

SHEET NO.
C-001

BANNON, DAN \\geiconsultants.com\data\Data_Storage\Working\UNIVERSITY OF NEW ENGLAND\2203703 UNE Marine Science Center Pier\00_CAD\Design\Sheets\2203703-C-001.dwg - 8/14/2024

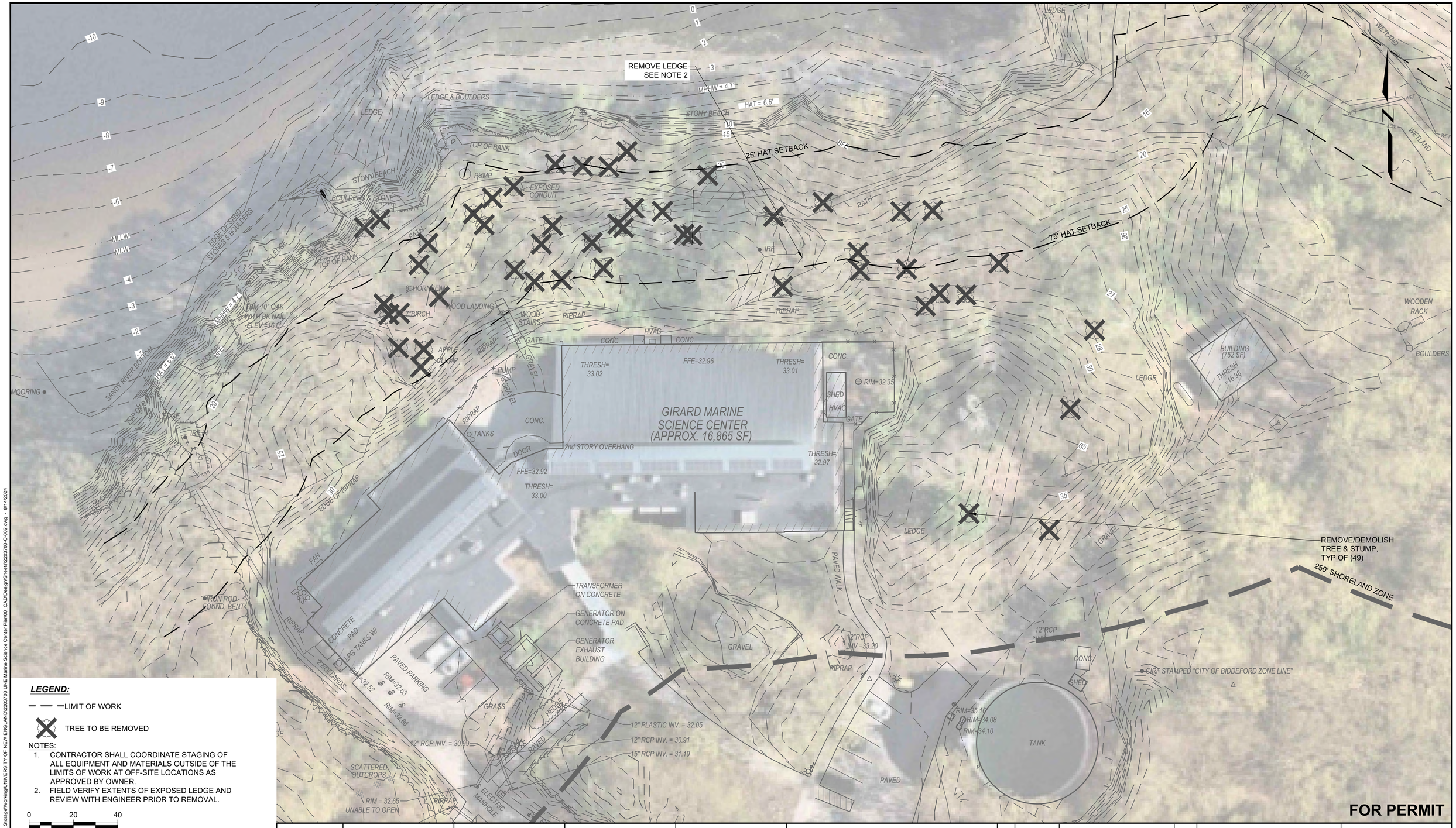

LEGEND:

— — — LIMIT OF WORK

TREE TO BE REMOVED

NOTES:

1. CONTRACTOR SHALL COORDINATE STAGING OF ALL EQUIPMENT AND MATERIALS OUTSIDE OF THE LIMITS OF WORK AT OFF-SITE LOCATIONS AS APPROVED BY OWNER.
2. FIELD VERIFY EXTENTS OF EXPOSED LEDGE AND REVIEW WITH ENGINEER PRIOR TO REMOVAL.

0 20 40
SCALE, FEET

ELEVATION	MLLW	NAVD88*
BFE	+19.0	+14.0
HAT	+11.6	+6.6
MHHW	+9.7	+4.7
MHW	+9.3	+4.3
MSL	+4.8	-0.2
MLW	+0.3	-4.7
MLLW	0.0	-5.0

*PROJECT DATUM

FOR PERMIT

Attention:
0 1"
If this scale bar does not measure 1" then drawing is not original scale.

DRAFT

Designed:	DJB
Drawn:	JAM
Checked:	BJB
Approved:	BMM
P.E. No:	13033
GEI Project	2203703

GEI Consultants
GEI CONSULTANTS, INC.
5 MILK STREET
PORTLAND, ME 04101
(207)797-8901

UNE
UNIVERSITY OF NEW ENGLAND
11 HILLS BEACH RD.
BIDDEFORD, MAINE

UNIVERSITY OF NEW ENGLAND MARINE SCIENCE CENTER PIER
11 HILLS BEACH ROAD
BIDDEFORD, YORK COUNTY, MAINE

NO	DATE	ISSUE/REVISION	APP
6	8/14/2024	REVISED PERMIT SET	DJB
5	6/27/2024	REVISED PERMIT SET	DJB
4	9/14/2023	DEP PERMIT SET	DJB
3	6/28/2023	75% DESIGN SUBMISSION	DJB
2	2/15/2023	305 DESIGN SUBMISSION	DJB
1	12/9/2022	15% DESIGN SUB REV	DJB
0	11/11/2022	15% DESIGN SUBMISSION	DJB

SHEET NAME
DEMOLITION AND CONSTRUCTION STAGING

SHEET NO.
C-002

BANNON, DAN \\geiconsultants.com\data\Data_Storage\Working\UNIVERSITY OF NEW ENGLAND\2203703 UNE Marine Science Center Pier\00_CAD\Design\Sheets\2203703-C-002.dwg - 8/14/2024

ZONING COMPLIANCE

PROPERTY ADDRESS	11 HILLS BEACH ROAD, CITY OF BIDDEFORD, MAINE		
TAX PARCEL ID	TAX MAP 52, LOT 4		
ZONING DISTRICT	INSTITUTIONAL (IN) ZONE WITH LIMITED RESIDENTIAL (LR) SHORELAND OVERLAY		
PROPOSED USE	MARINE RESEARCH FACILITY		
ITEM	**REQUIRED**	*EXISTING*	**PROPOSED**
MINIMUM LOT AREA	40,000	*>40,000 SF*	>40,000 SF
MINIMUM SHORE FRONTAGE	200 FT	*2,780 SF*	2,780 SF
MAXIMUM IMPERVIOUS (NORTH OF ROUTE 9)	N/A	*5%*	15%
SETBACK FROM HILLS BEACH RD	50 FT	*375 FT*	375 FT
SETBACK FROM PERIMETER OF THE INSTITUTIONAL ZONE	50 FT	*>50 FT*	>50 FT

(1) REQUIRED ZONING INFORMATION IN THIS TABLE IS TAKEN FROM V ATTACHMENT 2 "ESTABLISHMENT OF ZONES" SUPP 11, FEB 2022

PROPOSED PIER SYSTEM (SEE SHEETS S-001 - S-004).

REROUTE BEACH ACCESS PATH (BY OTHERS).

25' HAT SETBACK

75' HAT SETBACK

INSTALL 300 LF GUARDRAIL (SEE DETAIL).

LIMITS OF VEGETATION CLEARING, TYP.

PROPOSED STORMWATER COLLECTION RAIN GARDENS

ACCESS ROAD TURNAROUND.

PROPOSED (2) "NO VEHICULAR ACCESS BEYOND THIS POINT" SIGNS, TYP. (SEE DETAIL)

GIRARD MARINE SCIENCE CENTER (APPROX. 16,865 SF)

20' WIDE PAVED ACCESS ROAD, TYP.

PROPOSED R-1-1 30"X 30" STOP SIGN, TYP (SEE DETAIL).

PROPOSED PAVED ACCESS ROAD (SEE DETAIL, SHEET C-008).

250' SHORELAND ZONE

PROPOSED 24" WIDE WHITE STOP BAR, TYP (SEE DETAIL).

PROPOSED SAWCUT AND SEALING OF EXISTING PAVEMENT. MATCH INTO EXISTING PAVEMENT TYP.

TBM 10" OAK WITH PK NAIL ELEV.=16.0'

IRON ROD FOUND, BENT

CIRF STAMPED "CITY OF BIDDEFORD ZONE LINE"

N: 228236.91
E: 2895702.79

0 20 40
SCALE, FEET

CENTERLINE ALIGNMENT TABLE

SEGMENT ID	START	END	LENGTH (FEET)	CHORD LENGTH (FEET)	CURVE RADIUS (FEET)	DELTA ANGLE (DEGREES, MIN, SEC)
1	1+00	1+09.02	9.02			
2	1+09.02	1+47.32	38.30	38.26	241.93	9d4'13"
3	1+47.32	1+90.83	43.51	43.50	500.00	4d59'10"
4	1+90.83	2+99.52	108.69	108.35	400.00	15d34'5"
5	2+99.52	3+76.76	77.24	71.05	55.00	80d27'50"
6	3+76.76	5+88.65	211.89	209.42	400.00	30d21'2"
7	5+88.65	6+33.77	45.13	43.61	50.00	51d42'47"
8	6+33.77	6+60	26.23			

ELEVATION	MLLW	NAVD88*
BFE	+19.0	+14.0
HAT	+11.6	+6.6
MHHW	+9.7	+4.7
MHW	+9.3	+4.3
MSL	+4.8	-0.2
MLW	+0.3	-4.7
MLLW	0.0	-5.0

*PROJECT DATUM

Attention:
0 1"
If this scale bar does not measure 1" then drawing is not original scale.

DRAFT

Designed:	DJB
Drawn:	JAM
Checked:	BJB
Approved:	BMM
P.E. No:	13033
GEI Project	2203703

GEI Consultants
GEI CONSULTANTS, INC.
5 MILK STREET
PORTLAND, ME 04101
(207)797-8901

UNIVERSITY OF NEW ENGLAND
11 HILLS BEACH RD.
BIDDEFORD, MAINE

UNIVERSITY OF NEW ENGLAND MARINE SCIENCE CENTER PIER

11 HILLS BEACH ROAD
BIDDEFORD, YORK COUNTY, MAINE

NO	DATE	ISSUE/REVISION	APP
6	8/14/2024	REVISED PERMIT SET	DJB
5	6/27/2024	REVISED PERMIT SET	DJB
4	9/14/2023	DEP PERMIT SET	DJB
3	6/28/2023	75% DESIGN SUBMISSION	DJB
2	2/15/2023	305 DESIGN SUBMISSION	DJB
1	12/9/2022	15% DESIGN SUB REV	DJB
0	11/11/2022	15% DESIGN SUBMISSION	DJB

SHEET NAME: **SITE PLAN**

SHEET NO.: **C-003**

FOR PERMIT

BANNON, DAN \\geiconsultants.com\data\Data_Storage\Working\UNIVERSITY OF NEW ENGLAND\2203703 UNE Marine Science Center Pier\00_CAD\Design\Sheets\2203703-C-003.dwg - 8/14/2024

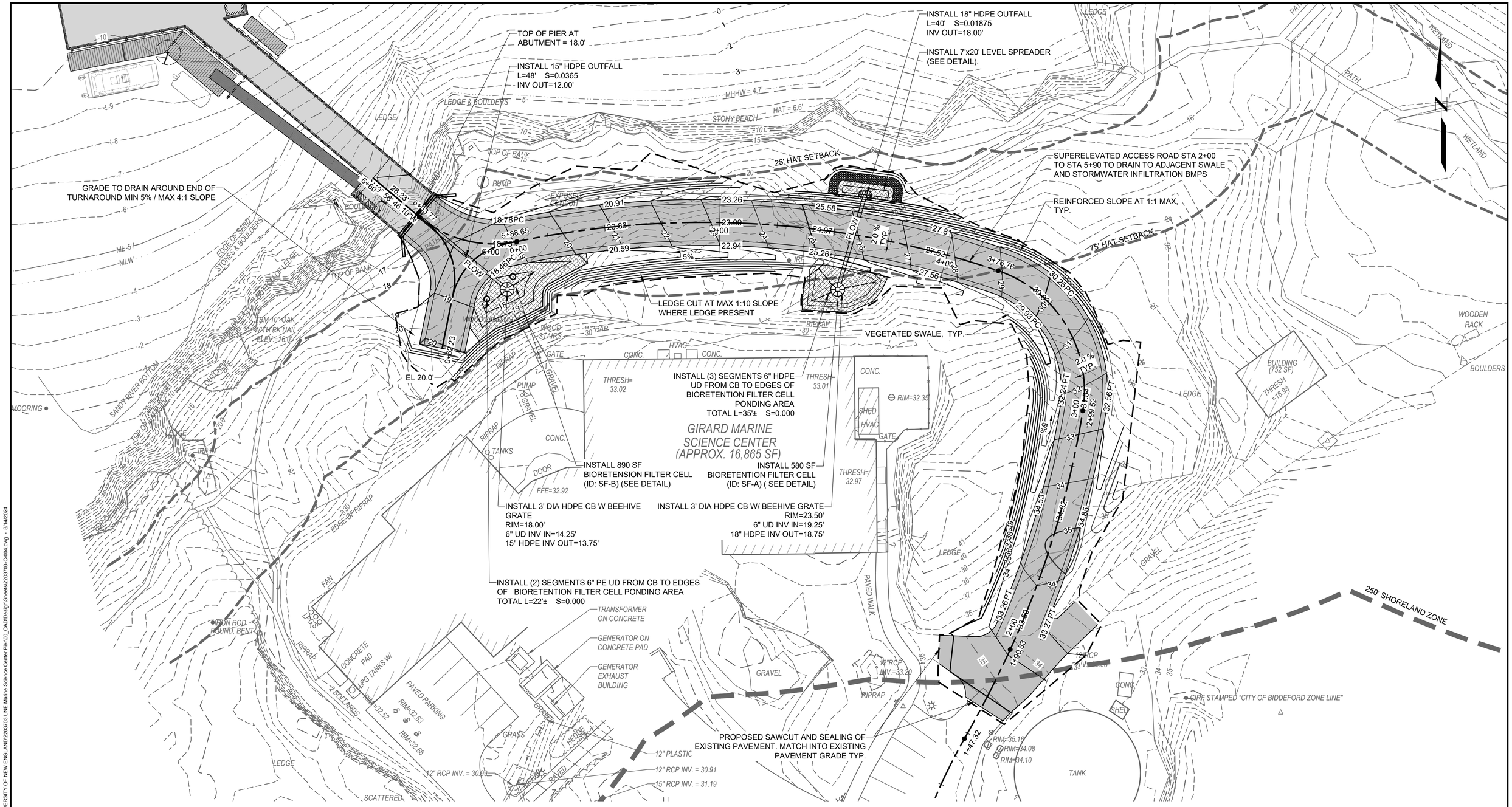

PLAN
SCALE: 1" = 20'

FOR PERMIT

Attention:
0 1"
If this scale bar does not measure 1" then drawing is not original scale.

0 20 40
SCALE, FEET

Designed:	DJB
Drawn:	JAM
Checked:	BJB
Approved:	BMM
P.E. No:	13033
GEI Project	2203703

GEI Consultants
GEI CONSULTANTS, INC.
5 MILK STREET
PORTLAND, ME 04101
(207)797-8901

UNE
UNIVERSITY OF NEW ENGLAND
11 HILLS BEACH RD.
BIDDEFORD, MAINE

UNIVERSITY OF NEW ENGLAND MARINE SCIENCE CENTER PIER

11 HILLS BEACH ROAD
BIDDEFORD, YORK COUNTY, MAINE

NO	DATE	ISSUE/REVISION	APP
6	8/14/2024	REVISED PERMIT SET	DJB
5	6/27/2024	REVISED PERMIT SET	DJB
4	9/14/2023	DEP PERMIT SET	DJB
3	6/28/2023	75% DESIGN SUBMISSION	DJB
2	2/15/2023	305 DESIGN SUBMISSION	DJB
1	12/9/2022	15% DESIGN SUB REV	DJB
0	11/11/2022	15% DESIGN SUBMISSION	DJB

SHEET NAME
GRADING AND DRAINAGE PLAN

SHEET NO.
C-004

BANNON, DAN \\geiconsultants.com\data\Data_Storage\Working\UNIVERSITY OF NEW ENGLAND\2203703 UNE Marine Science Center Pier\00_CAD\Design\Sheets\2203703-C-004.dwg - 8/14/2024

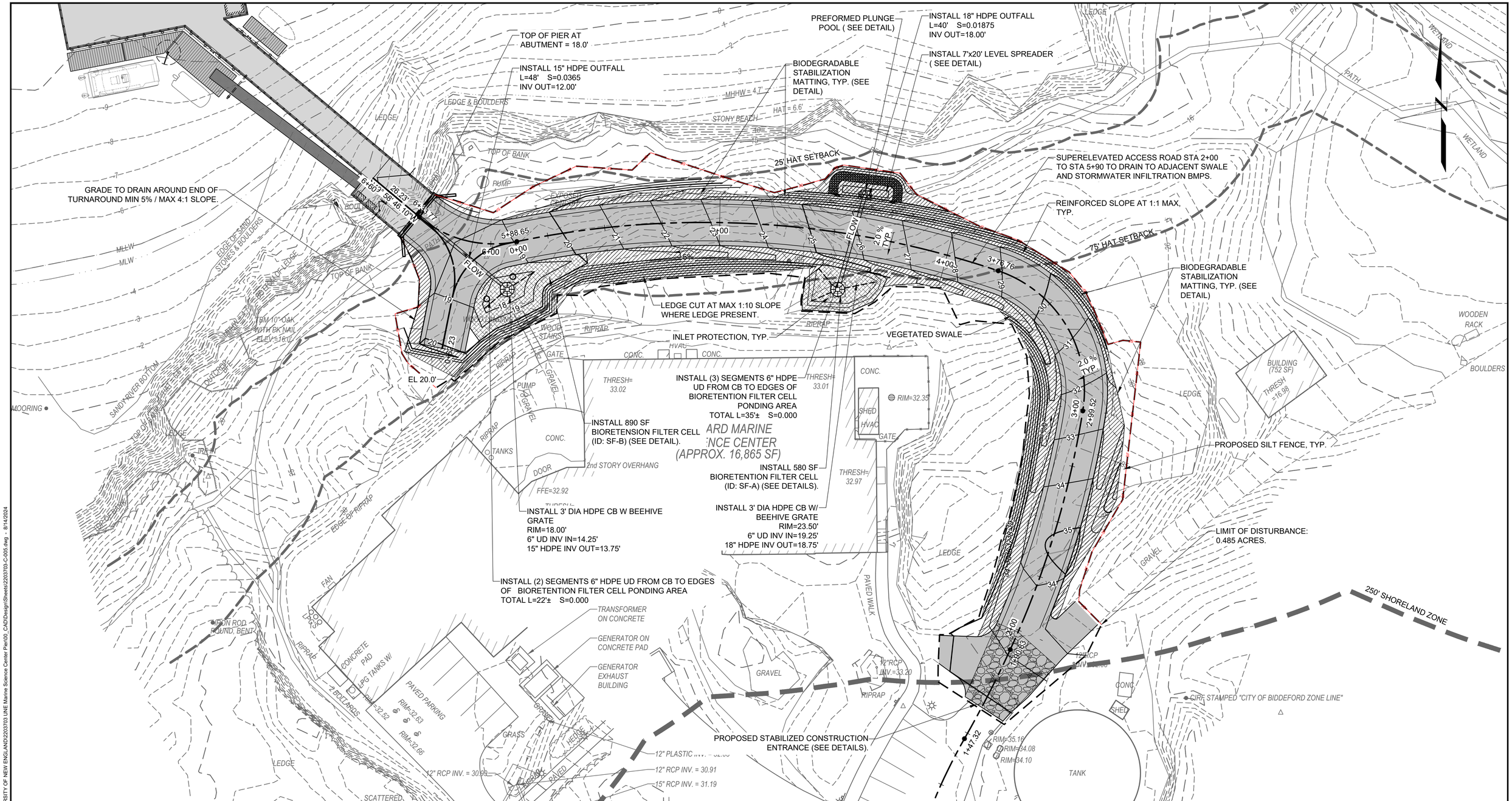

PLAN
SCALE: 1" = 20'

NOTE:
CONTRACTOR SHALL INSTALL BIODEGRADABLE STABILIZATION MATTING WHEREVER PROPOSED SLOPES EXCEED 5H:1V.

FOR PERMIT

Attention:
0 1"
If this scale bar does not measure 1" then drawing is not original scale.

0 20 40
SCALE, FEET

Designed:	DJB
Drawn:	JAM
Checked:	BJB
Approved:	BMM
P.E. No:	13033
GEI Project	2203703

GEI Consultants
GEI CONSULTANTS, INC.
5 MILK STREET
PORTLAND, ME 04101
(207)797-8901

UNE
UNIVERSITY OF NEW ENGLAND
11 HILLS BEACH RD.
BIDDEFORD, MAINE

UNIVERSITY OF NEW ENGLAND MARINE SCIENCE CENTER PIER

11 HILLS BEACH ROAD
BIDDEFORD, YORK COUNTY, MAINE

NO	DATE	ISSUE/REVISION	APP
6	8/14/2024	REVISED PERMIT SET	DJB
5	6/27/2024	REVISED PERMIT SET	DJB
4	9/14/2023	DEP PERMIT SET	DJB
3	6/28/2023	75% DESIGN SUBMISSION	DJB
2	2/15/2023	305 DESIGN SUBMISSION	DJB
1	12/9/2022	15% DESIGN SUB REV	DJB
0	11/11/2022	15% DESIGN SUBMISSION	DJB

SHEET NAME
EROSION CONTROL PLAN

SHEET NO.
C-005

BANNON, DAN \\geiconsultants.com\data\Data_Storage\Working\UNIVERSITY OF NEW ENGLAND\2203703 UNE Marine Science Center Pier\00_CAD\Design\Sheets\2203703-C-005.dwg - 8/14/2024

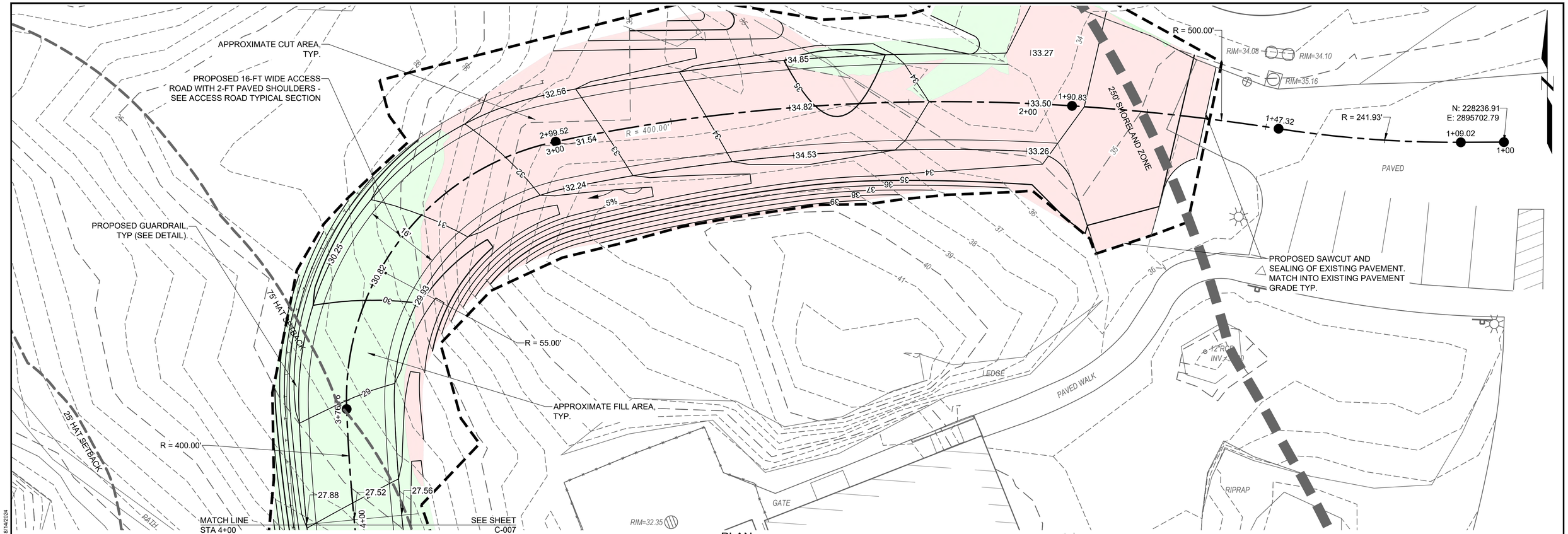

PLAN

SCALE: 1" = 10'

0 10 20

SCALE, FEET

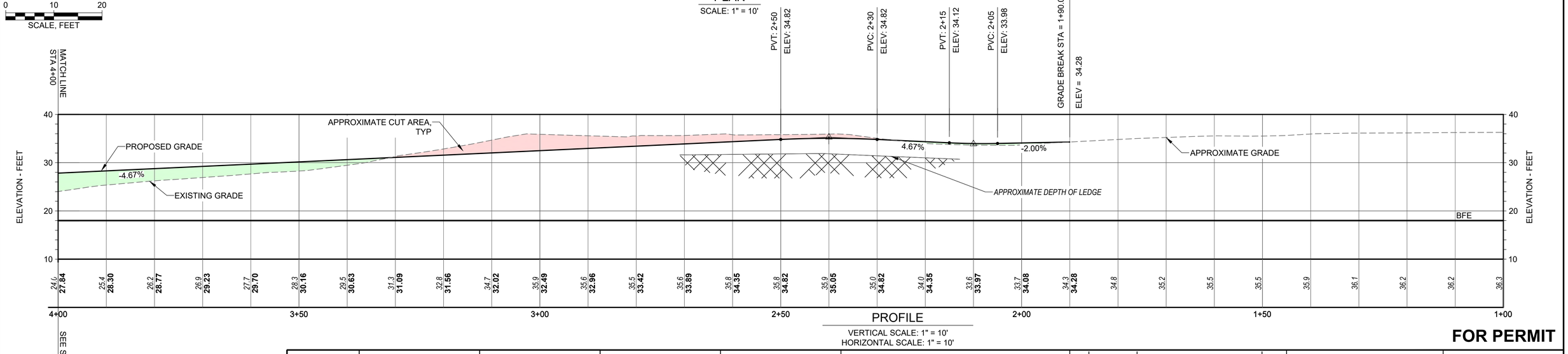

PROFILE

VERTICAL SCALE: 1" = 10'
HORIZONTAL SCALE: 1" = 10'

FOR PERMIT

CUT/FILL ANALYSIS

STRUCTURE	QUANTITY (CY)
CUT	2174.50
FILL	782.30
NET (FILL)	1392.20

Attention:

0 1"

If this scale bar does not measure 1" then drawing is not original scale.

DRAFT

Designed:	DJB
Drawn:	JAM
Checked:	BJB
Approved:	BMM
P.E. No:	13033
GEI Project	2203703

GEI Consultants
GEI CONSULTANTS, INC.
5 MILK STREET
PORTLAND, ME 04101
(207)797-8901

UNE
UNIVERSITY OF NEW ENGLAND
11 HILLS BEACH RD.
BIDDEFORD, MAINE

UNIVERSITY OF NEW ENGLAND MARINE SCIENCE CENTER PIER
11 HILLS BEACH ROAD
BIDDEFORD, YORK COUNTY, MAINE

NO	DATE	ISSUE/REVISION	APP
6	8/14/2024	REVISED PERMIT SET	DJB
5	6/27/2024	REVISED PERMIT SET	DJB
4	9/14/2023	DEP PERMIT SET	DJB
3	6/28/2023	75% DESIGN SUBMISSION	DJB
2	2/15/2023	305 DESIGN SUBMISSION	DJB
1	12/9/2022	15% DESIGN SUB REV	DJB
0	11/11/2022	15% DESIGN SUBMISSION	DJB

SHEET NAME

ACCESS ROAD PLAN AND PROFILE STA 1+00 TO 4+00

SHEET NO.

C-006

BANNON_DAN \\geiconsultants.com\data\Data_Storage\Working\UNIVERSITY OF NEW ENGLAND\2203703 UNE Marine Science Center Pier\00_CAD\Design\Sheets\2203703-C-006 C-007.dwg - 8/14/2024

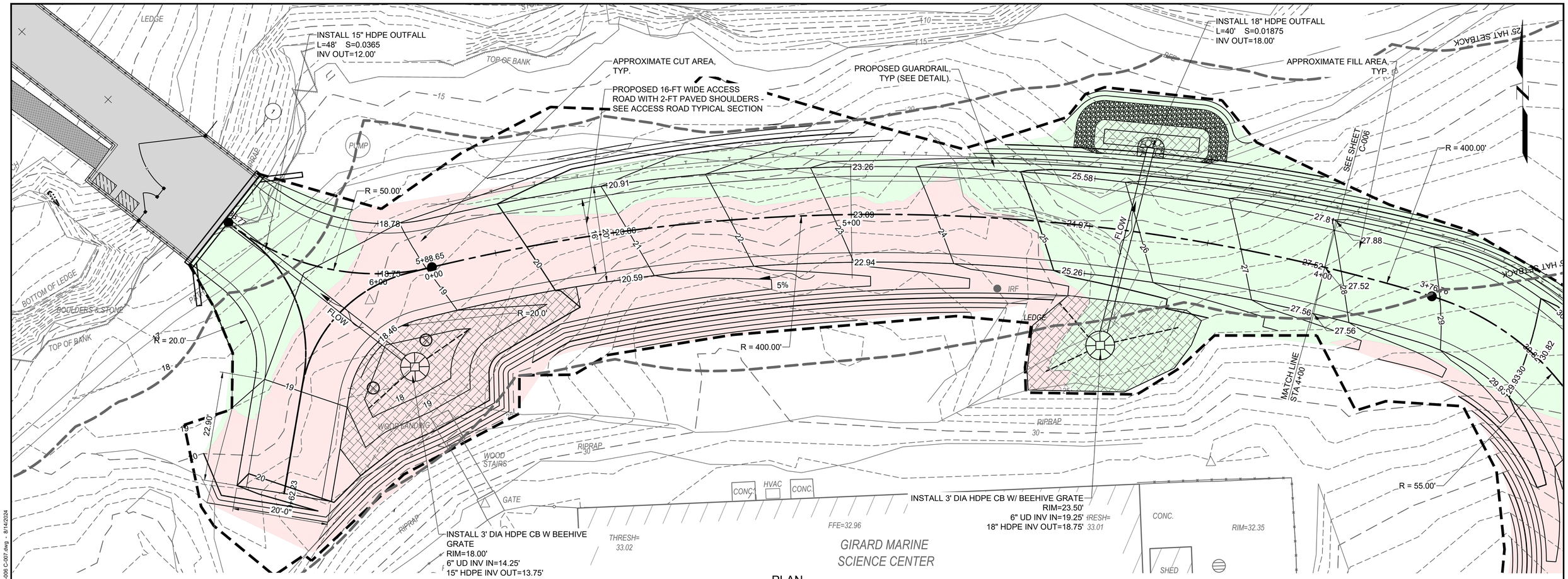

PLAN

SCALE: 1" = 10'

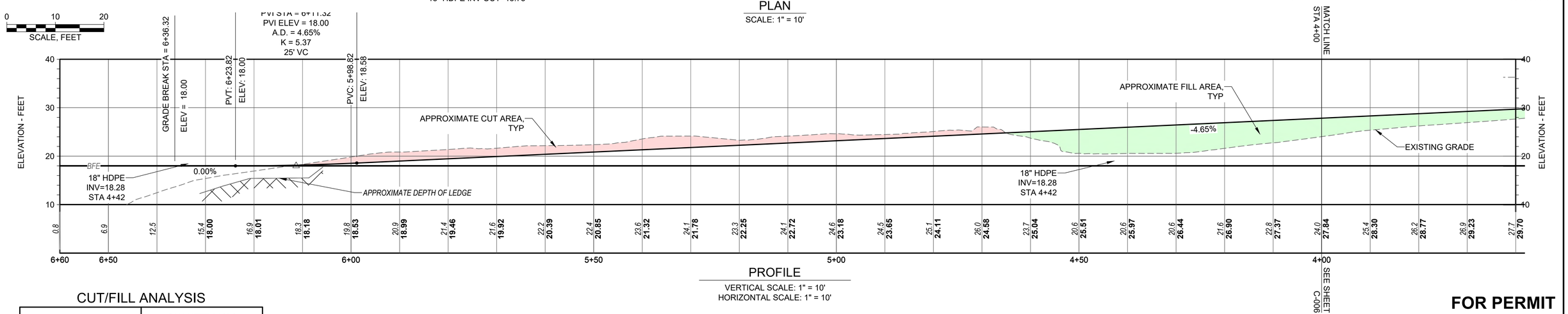

PROFILE

VERTICAL SCALE: 1" = 10'
HORIZONTAL SCALE: 1" = 10'

CUT/FILL ANALYSIS

STRUCTURE	QUANTITY (CY)
CUT	2174.50
FILL	782.30
NET (FILL)	1392.20

FOR PERMIT

Attention:
0 1"
If this scale bar does not measure 1" then drawing is not original scale.

DRAFT

Designed:	DJB
Drawn:	JAM
Checked:	BJB
Approved:	BMM
P.E. No:	13033
GEI Project	2203703

GEI Consultants
GEI CONSULTANTS, INC.
5 MILK STREET
PORTLAND, ME 04101
(207)797-8901

UNE
UNIVERSITY OF NEW ENGLAND
11 HILLS BEACH RD.
BIDDEFORD, MAINE

UNIVERSITY OF NEW ENGLAND MARINE SCIENCE CENTER PIER
11 HILLS BEACH ROAD
BIDDEFORD, YORK COUNTY, MAINE

NO	DATE	ISSUE/REVISION	APP
6	8/14/2024	REVISED PERMIT SET	DJB
5	6/27/2024	REVISED PERMIT SET	DJB
4	9/14/2023	DEP PERMIT SET	DJB
3	6/28/2023	75% DESIGN SUBMISSION	DJB
2	2/15/2023	305 DESIGN SUBMISSION	DJB
1	12/9/2022	15% DESIGN SUB REV	DJB
0	11/11/2022	15% DESIGN SUBMISSION	DJB

SHEET NAME

ACCESS ROAD PLAN AND PROFILE STA 4+00 TO STA 6+60

SHEET NO.

C-007

BANNON, DAN \\geiconsultants.com\data\Data_Storage\Working\UNIVERSITY OF NEW ENGLAND\2203703 UNE Marine Science Center Pier\00_CAD\Design\Sheets\2203703-C-006 C-007.dwg - 8/14/2024

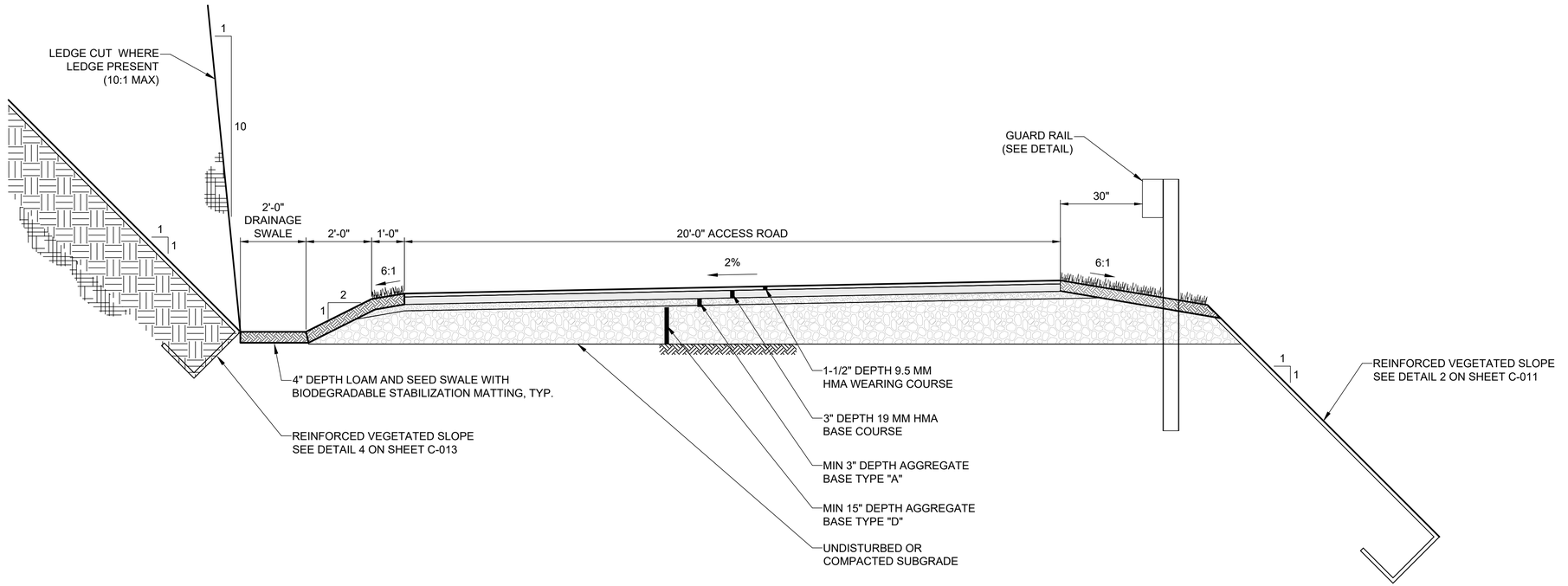

TYPICAL ACCESS ROAD SECTION

SCALE: NTS

FOR PERMIT

Attention:

0 1"

If this scale bar does not measure 1" then drawing is not original scale.

Designed:	DJB
Drawn:	JAM
Checked:	BJB
Approved:	BMM
P.E. No:	13033
GEI Project	2203703

GEI Consultants
GEI CONSULTANTS, INC.
5 MILK STREET
PORTLAND, ME 04101
(207)797-8901

UNIVERSITY OF NEW ENGLAND

11 HILLS BEACH RD.
BIDDEFORD, MAINE

UNIVERSITY OF NEW ENGLAND
MARINE SCIENCE CENTER PIER
11 HILLS BEACH ROAD
BIDDEFORD, YORK COUNTY, MAINE

NO	DATE	ISSUE/REVISION	APP
6	8/14/2024	REVISED PERMIT SET	DJB
5	6/27/2024	REVISED PERMIT SET	DJB
4	9/14/2023	DEP PERMIT SET	DJB
3	6/28/2023	75% DESIGN SUBMISSION	DJB
2	2/15/2023	305 DESIGN SUBMISSION	DJB
1	12/9/2022	15% DESIGN SUB REV	DJB
0	11/11/2022	15% DESIGN SUBMISSION	DJB

SHEET NAME

ACCESS ROAD TYPICAL SECTION

SHEET NO.

C-008

BANNON, DAN \\geiconsultants.com\data\Data_Storage\Working\UNIVERSITY OF NEW ENGLAND\2203703 UNE Marine Science Center Pier\00_CAD\Design\Sheets\2203703-C-008.dwg - 8/14/2024

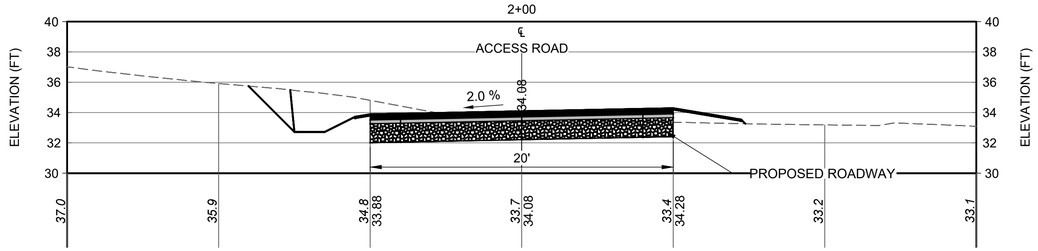

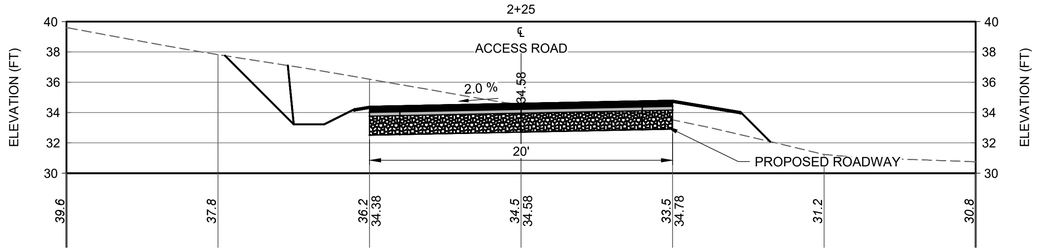

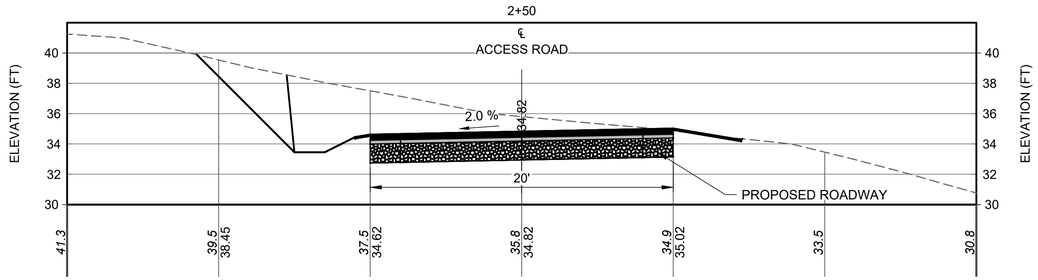

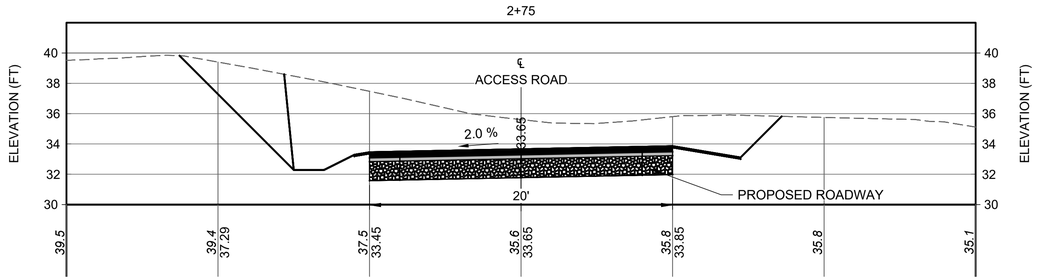

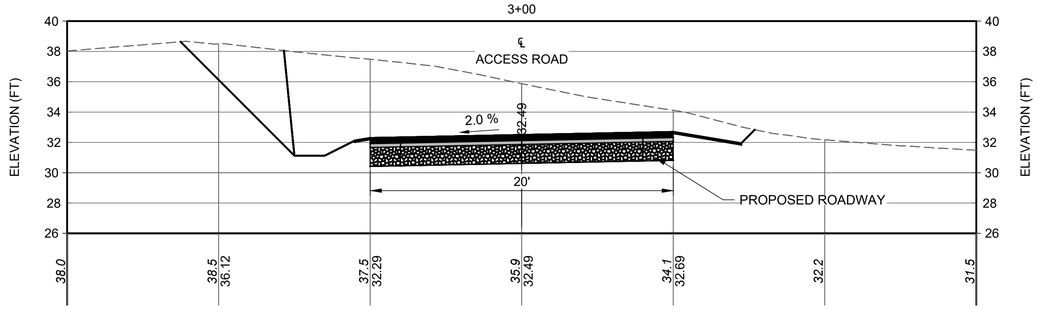

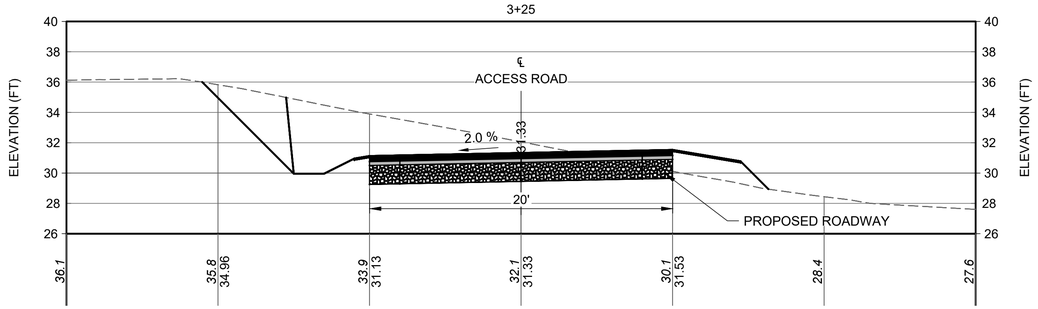

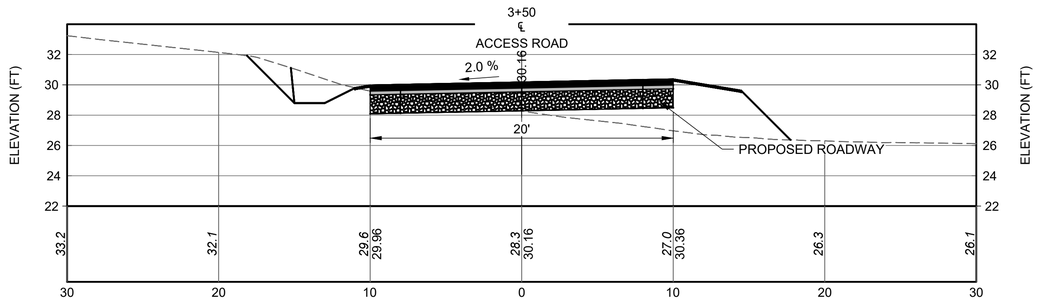

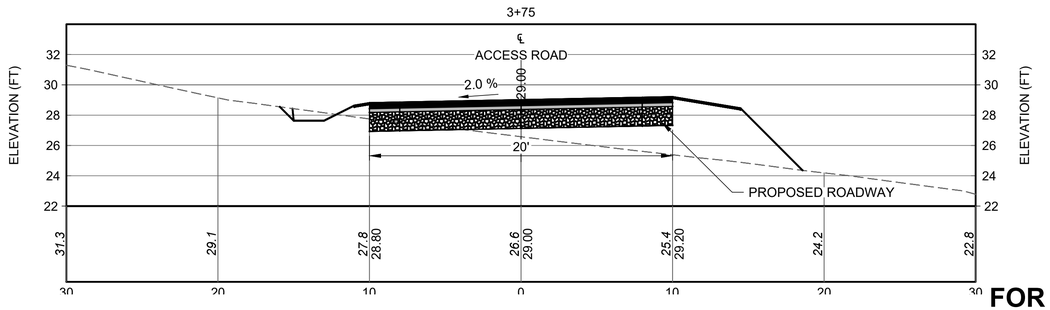

FOR PERMIT

0 2.5 5 10
SCALE, FEET

Attention:
0 1"
If this scale bar does not measure 1" then drawing is not original scale.

DRAFT

Designed:	DJB
Drawn:	JAM
Checked:	BJB
Approved:	BMM
P.E. No:	13033
GEI Project	2203703

GEI Consultants
GEI CONSULTANTS, INC.
5 MILK STREET
PORTLAND, ME 04101
(207)797-8901

UNE
UNIVERSITY OF NEW ENGLAND
11 HILLS BEACH RD.
BIDDEFORD, MAINE

UNIVERSITY OF NEW ENGLAND MARINE SCIENCE CENTER PIER

11 HILLS BEACH ROAD
BIDDEFORD, YORK COUNTY, MAINE

NO	DATE	ISSUE/REVISION	APP
6	8/14/2024	REVISED PERMIT SET	DJB
5	6/27/2024	REVISED PERMIT SET	DJB
4	9/14/2023	DEP PERMIT SET	DJB
3	6/28/2023	75% DESIGN SUBMISSION	DJB
2	2/15/2023	305 DESIGN SUBMISSION	DJB
1	12/9/2022	15% DESIGN SUB REV	DJB
0	11/11/2022	15% DESIGN SUBMISSION	DJB

SHEET NAME

ROAD ACCESS SECTIONS STA 2+00 TO 3+75

SHEET NO.

C-009

BANNON, DAN \\geiconsultants.com\data\Data_Storage\Working\UNIVERSITY OF NEW ENGLAND\2203703 UNE Marine Science Center Pier\00_CAD\Design\Sheets\2203703-C-009 C-010.dwg - 8/14/2024

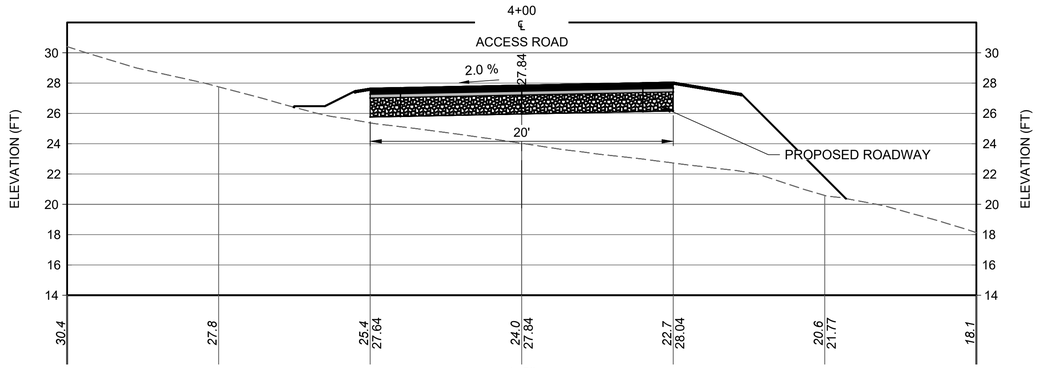

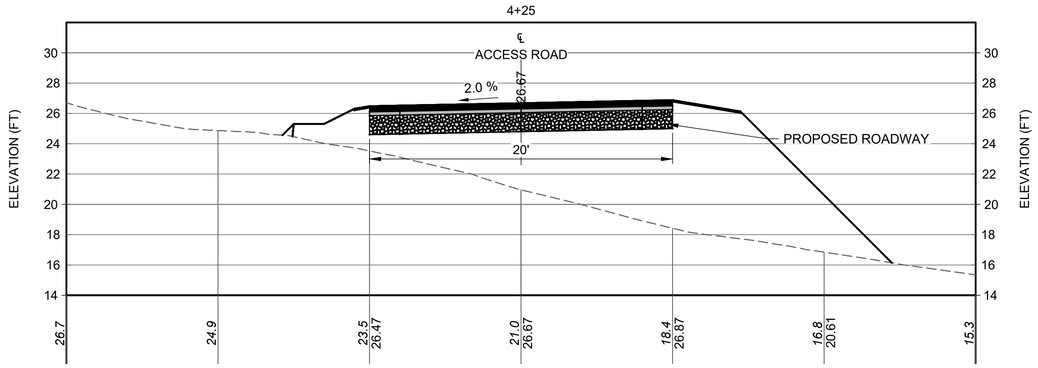

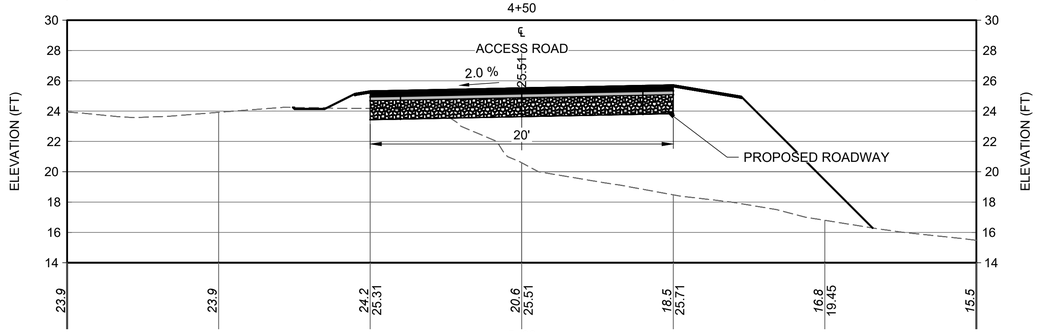

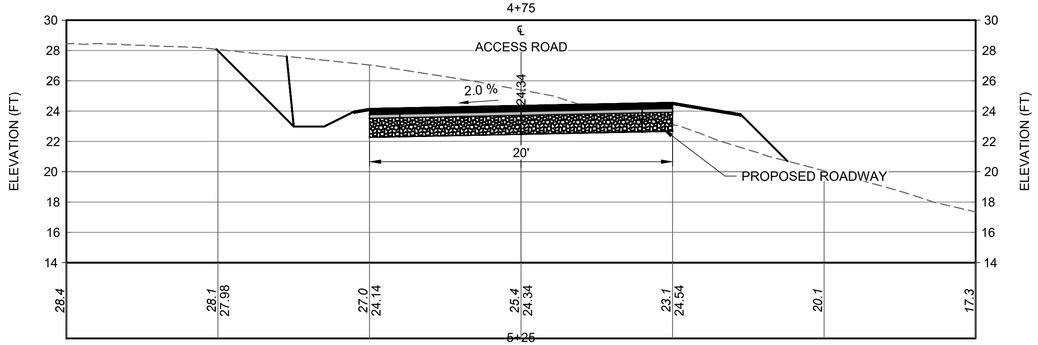

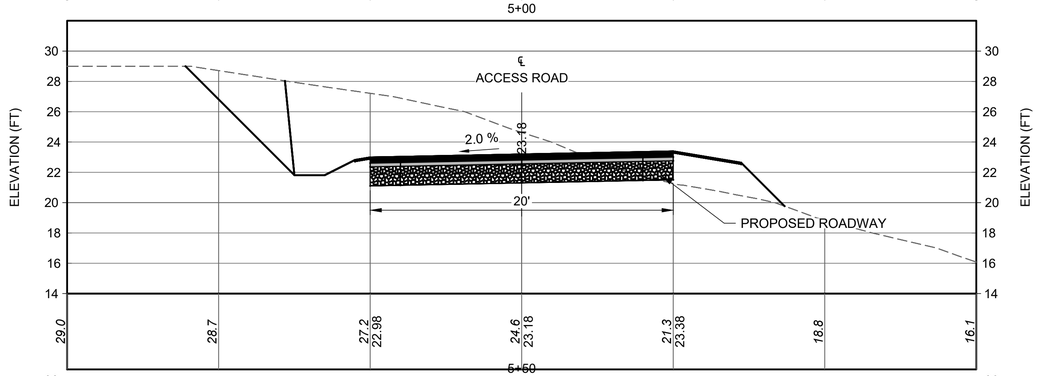

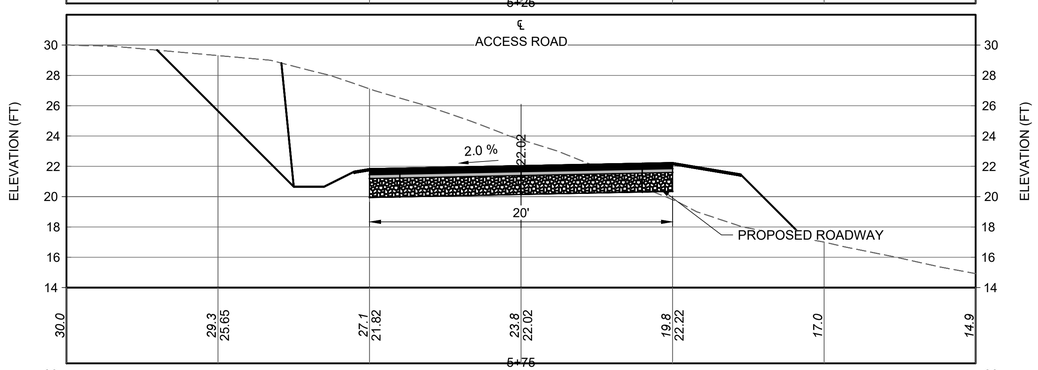

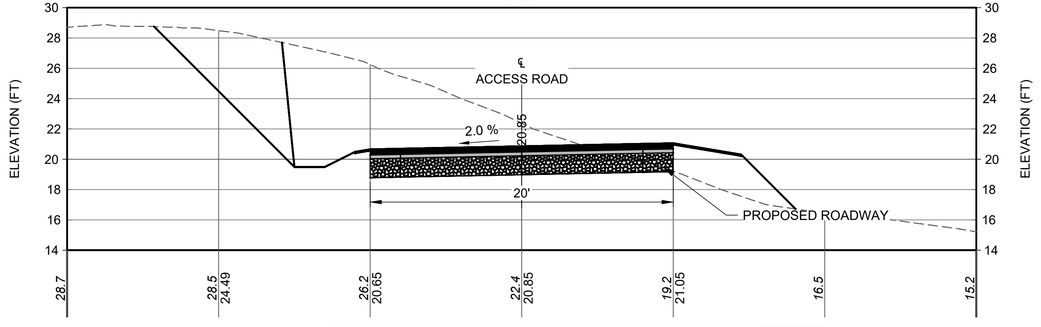

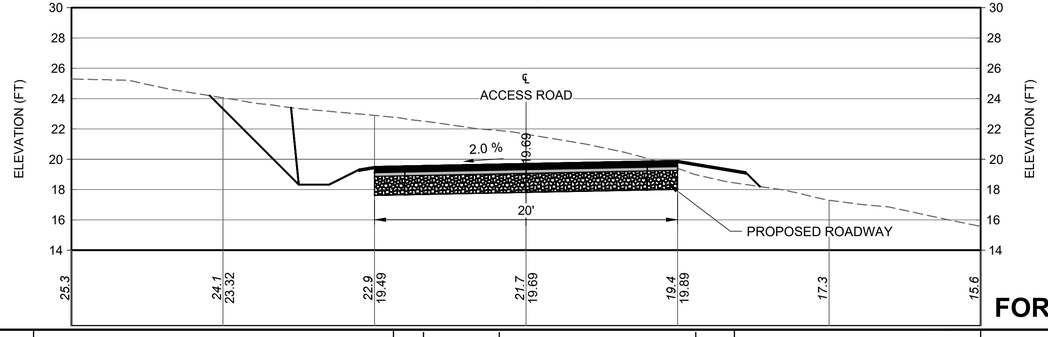

FOR PERMIT

0 2.5 5 10
SCALE, FEET

Attention:
0 1"
If this scale bar does not measure 1" then drawing is not original scale.

DRAFT

Designed:	DJB
Drawn:	JAM
Checked:	BJB
Approved:	BMM
P.E. No:	13033
GEI Project	2203703

GEI Consultants
GEI CONSULTANTS, INC.
5 MILK STREET
PORTLAND, ME 04101
(207)797-8901

UNE
UNIVERSITY OF NEW ENGLAND
11 HILLS BEACH RD.
BIDDEFORD, MAINE

UNIVERSITY OF NEW ENGLAND MARINE SCIENCE CENTER PIER
11 HILLS BEACH ROAD
BIDDEFORD, YORK COUNTY, MAINE

NO	DATE	ISSUE/REVISION	APP
6	8/14/2024	REVISED PERMIT SET	DJB
5	6/27/2024	REVISED PERMIT SET	DJB
4	9/14/2023	DEP PERMIT SET	DJB
3	6/28/2023	75% DESIGN SUBMISSION	DJB
2	2/15/2023	305 DESIGN SUBMISSION	DJB
1	12/9/2022	15% DESIGN SUB REV	DJB
0	11/11/2022	15% DESIGN SUBMISSION	DJB

SHEET NAME
ROAD ACCESS SECTIONS STA 4+00 TO 5+75

SHEET NO.
C-010

BANNON, DAN \\geiconsultants.com\data\Data_Storage\Working\UNIVERSITY OF NEW ENGLAND\2203703 UNE Marine Science Center Pier\00_CAD\Design\Sheets\2203703-C-009 C-010.dwg - 8/14/2024

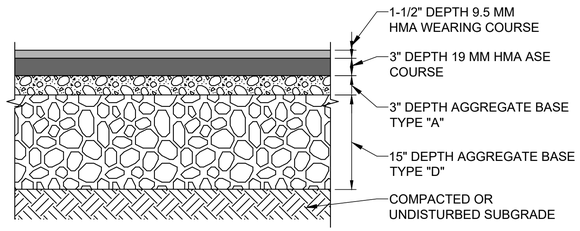

NOTES:
1. PAVEMENT DESIGN SHALL HAVE A MAINEDOT APPROVED JOB MIX FORMULA (JMF) WITHIN THE LATEST CALENDAR YEAR UNLESS OTHERWISE APPROVED BY OWNER.

1 HMA TRAVELWAY/SHOULDER TYPICAL SECTION

NO SCALE

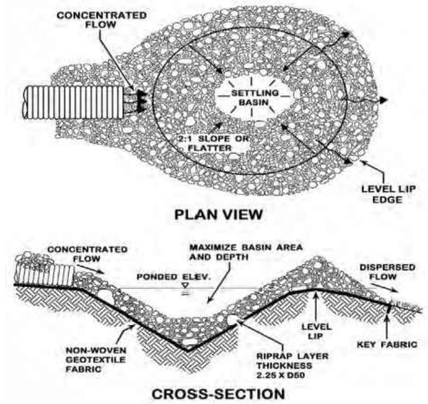

PLUNGE POOL SIZING (minimum)				
SIZE	RIPRAP SIZING (D_{50})	WIDTH At the narrow end of pipe	LENGTH For slow flows (no pressure head)	LENGTH For high flows (with pressure head)
12"	5"	3-4'	4-6'	8-10'
18"	8"	4-6'	6-8'	12-18'
24"	10"	6-8'	8-10'	18-22'
30"	12"	8-10'	12-14'	22-28'
36"	14"	10-12'	14-16'	28-32'

The diameter of the largest stone size in the mix should be about 1.5 times the D_{50} and the smallest one about one half the size. The thickness of riprap should never be less than 2 times the rock D_{50}.

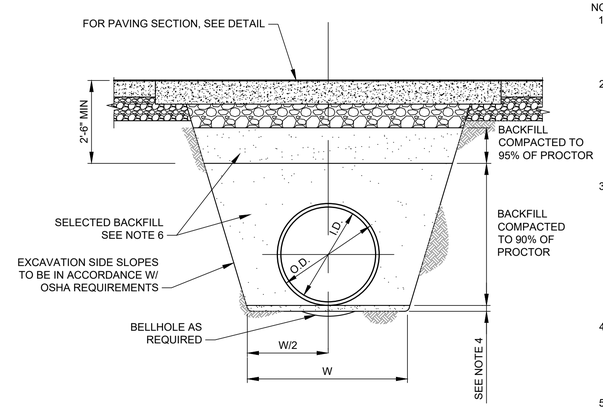

NOTES:
1. TRENCH BOTTOM OR BEDDING FOR ALL PIPE SHALL BE GRADED TO PROVIDE UNIFORM SUPPORT FOR THE ENTIRE LENGTH OF THE PIPE EXCEPT AT BELLHOLES.
2. BELLHOLES FOR PIPES SHALL HAVE A CLEARANCE OF 3" BETWEEN THE BOTTOM OF THE BELLHOLE AND THE EXTERIOR OF THE PIPE BARREL, BUT IN NO CASE SHALL BELLHOLES BE SMALLER THAN REQUIRED TO FACILITATE PLACING OF THE PIPE OR PROPER JOINING OF THE PIPE.
3. COMPACTION BACKFILL SHALL BE COMPACTED TO A DEGREE AT LEAST EQUIVALENT TO THE EXISTING DEGREE OF COMPACTING OF ADJACENT IN-PLACE EARTH MATERIALS AGAINST WHICH SUCH COMPACTED BACKFILL IS TO BE PLACED, OR TO A MIN OF 95% OF THE LABORATORY STANDARD MAX ASTM D698 DENSITY, WHICHEVER IS GREATER.
4. MIN 3" DEEP LAYER OF SCARIFIED MATERIAL WHEN IN HARD MATERIAL. IN UNSUITABLE MATERIAL, OVER EXCAVATE AS DIRECTED BY ENGINEER (6" MIN) AND REPLACE WITH COMPACTED BACKFILL.
5. W = PIPE O.D. + 24" MIN
6. ALL SELECTED BACKFILL IS TO BE IN CONFORMANCE WITH STATE STANDARD SPECIFICATION.

3 TRENCH

NO SCALE

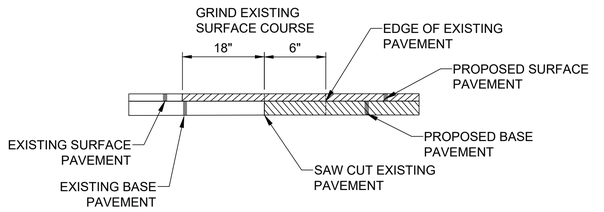

4 HMA PAVEMENT BUTT JOINT

NO SCALE

NOTES:
1. IF THE PIPE DISCHARGES ONTO A FLAT AREA, THE APRON SHOULD HAVE A WIDTH THAT IS THREE TIMES THE OUTLET PIPE'S DIAMETER. IF THE PIPE FLOWS HAVE THE POTENTIAL OF CAUSING A GULLY, A LEVEL SPREADER SHOULD BE PROVIDED.
2. THE CHANNEL SIDE SLOPES SHOULD BE NO STEEPER THAN 2:1. RIPRAP ON THE SIDES OF THE PLUNGE POOL SHOULD EXTEND TO THE TOP OF THE CHANNEL.
3. THE PLUNGE POOL SIZING AND THE MEDIAN SIZED RIPRAP CAN BE DETERMINED FROM THE FOLLOWING TABLE. THE THICKNESS OF RIPRAP SHOULD NOT BE LESS THAN 2 TIMES THE ROCK D50.
4. A GEOTEXTILE OR APPROPRIATE GRAVEL FILTER SHOULD BE USED TO PROTECT AGAINST PIPING OF SOIL FINES FROM BENEATH THE ROCK.
5. IN A CHANNEL THAT CAN BE REVEGETATED, SEED AND MULCH SHOULD BE APPLIED WITHIN 7 DAYS FROM FINAL CONSTRUCTION..

2 PLUNGE POOL

NO SCALE

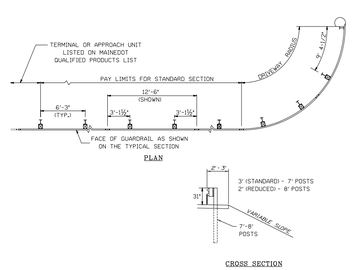

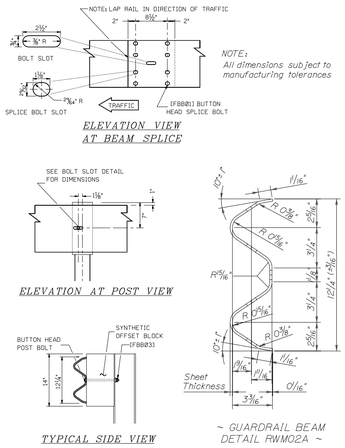

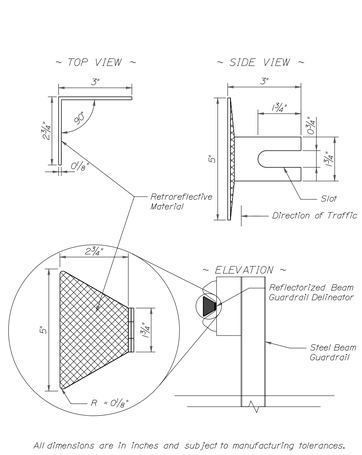

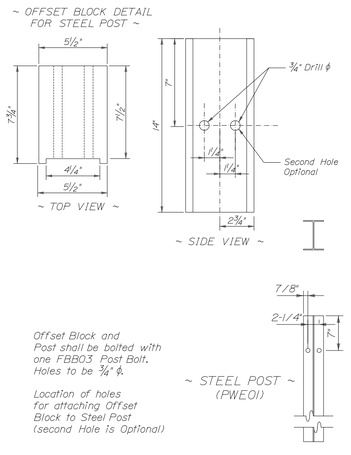

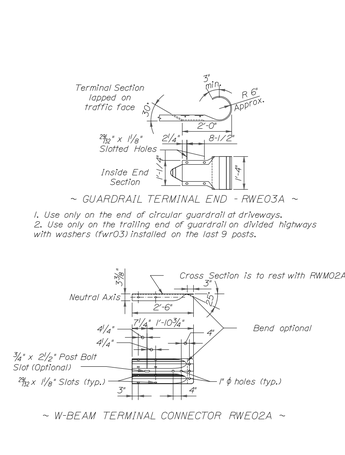

5 GUARD RAIL DETAILS

NO SCALE

FOR PERMIT

Attention: 0 1" — If this scale bar does not measure 1" then drawing is not original scale.

Designed:	DJB
Drawn:	JAM
Checked:	BJB
Approved:	BMM
P.E. No:	13033
GEI Project	2203703

GEI Consultants
GEI CONSULTANTS, INC.
5 MILK STREET
PORTLAND, ME 04101
(207)797-8901

UNIVERSITY OF NEW ENGLAND
11 HILLS BEACH RD.
BIDDEFORD, MAINE

UNIVERSITY OF NEW ENGLAND MARINE SCIENCE CENTER PIER
11 HILLS BEACH ROAD
BIDDEFORD, YORK COUNTY, MAINE

NO	DATE	ISSUE/REVISION	APP
6	8/14/2024	REVISED PERMIT SET	DJB
5	6/27/2024	REVISED PERMIT SET	DJB
4	9/14/2023	DEP PERMIT SET	DJB
3	6/28/2023	75% DESIGN SUBMISSION	DJB
2	2/15/2023	305 DESIGN SUBMISSION	DJB
1	12/9/2022	15% DESIGN SUB REV	DJB
0	11/11/2022	15% DESIGN SUBMISSION	DJB

SHEET NAME: **SITE DETAILS**

SHEET NO.: **C-011**

BANNON, DAN "geiconsultants.com\data\Data_Storage\Working\UNIVERSITY OF NEW ENGLAND\2203703 UNE Marine Science Center Pier\00_CAD\Design\Sheets\2203703-C-DETAILS.dwg - 8/14/2024

EROSION AND SEDIMENTATION CONTROL NOTES:

INTRODUCTION

THE FOLLOWING PLAN FOR CONTROLLING SEDIMENTATION AND EROSION IN THIS PROJECT IS BASED ON CONSERVATION PRACTICES FOUND IN THE MAINE EROSION & SEDIMENT CONTROL BMPS MANUAL, OCTOBER 2016, AND MAINE EROSION AND SEDIMENT CONTROL PRACTICE FIELD GUIDE FOR CONTRACTORS, REVISED 2014, MAINE DEPARTMENT OF ENVIRONMENTAL PROTECTION. THE CONTRACTOR WHO IMPLEMENTS THIS PLAN SHALL BE FAMILIAR WITH THESE PUBLICATIONS AND ADHERE TO THEM AND THE PRACTICES PRESENTED HEREIN REFERENCE IS MADE TO THE EROSION CONTROL PLANS AND DETAILS (C-005 AND C-013) WITHIN THE PLAN SET, SHOWING THE LOCATIONS AND TYPES OF PROPOSED MEASURES TO BE IMPLEMENTED.

GENERAL EROSION AND SEDIMENTATION CONTROL NOTES:

1. EROSION AND SEDIMENTATION CONTROL MEASURES ARE PROPOSED TO CONTROL ACCELERATED EROSION AND SEDIMENTATION AND REDUCE ADVERSE IMPACTS FROM RUNOFF AND EROSION AT THE WORK SITE.
2. APPLICATION OF TEMPORARY AND PERMANENT EROSION CONTROL MEASURES SHALL BE IN ACCORDANCE WITH THE LATEST EDITION OF THE MAINE EROSION AND SEDIMENT CONTROL BMP'S PUBLISHED BY MAINE DEP AND AVAILABLE AT: HTTPS://WWW.MAINE.GOV/DEP/LAND/EROSION/ESCBMPS/
3. THE WORK SHALL BE PERFORMED BY A CONTRACTOR THAT IS CERTIFIED BY MAINE DEP IN EROSION AND SEDIMENT CONTROL MEASURES. A CERTIFIED INDIVIDUAL SHALL BE ONSITE DURING ALL CONSTRUCTION ACTIVITY.
4. EROSION AND SEDIMENTATION DUE TO RUNOFF, TIDAL EXPOSURE, AND WAVE ACTION SHALL BE CONTROLLED BY STAGING CONSTRUCTION ACTIVITY TO MINIMIZE AREA AND TIME OF DISTURBANCE, APPLICATION OF SILT FENCE, BOOMS, BARRIERS, AND OTHER EROSION CONTROL MEASURES, AND PRESERVING NATURAL VEGETATION WHENEVER POSSIBLE.
5. THE CONTRACTOR'S SEQUENCE OF OPERATIONS AND SCHEDULE FOR WORK ACTIVITIES SHALL ACT TO MINIMIZE EXPOSURE TO EROSION.
6. THE CONTRACTOR SHALL TAKE CARE TO LIMIT THE AREA OF SOIL DISTURBANCE TO THE MINIMUM NECESSARY TO COMPLETE THE WORK.
7. EROSION CONTROL MEASURES, SEEDING, AND VEGETATION SHALL BE INSPECTED WEEKLY AND AFTER RAINSTORMS, RUNOFF EVENTS, AND STORM EVENTS UNTIL FINAL ACCEPTANCE. REPAIRS SHALL BE MADE WHEN NO LONGER SERVICEABLE DUE TO DAMAGE OR ACCUMULATION OF SEDIMENT.
8. AT THE COMPLETION OF CONSTRUCTION, ALL DISTURBED AREAS SHALL BE RESTORED TO THEIR ORIGINAL CONDITION AND CONTOUR, UNLESS OTHERWISE INDICATED ON THE PLANS.

GENERAL EROSION AND SEDIMENTATION CONTROL PRACTICES

THE FOLLOWING IS A LIST OF GENERAL EROSION CONTROL PRACTICES THAT WILL BE USED TO PREVENT EROSION AND SEDIMENTATION BEFORE, DURING AND AFTER THE CONSTRUCTION OF THIS PROJECT. IN ADDITION, SPECIAL CARE SHALL BE USED AT ALL TIMES TO:

LIMIT DISTURBANCE AND, HENCE, EROSION

1. CORRECT ANY EROSION PROBLEMS IMMEDIATELY.
2. REGULARLY MONITOR THE IMPLEMENTED PRACTICES, ESPECIALLY AFTER EVERY RAINFALL.
3. REVEGETATE DISTURBED AREAS AS SOON AS POSSIBLE AFTER CONSTRUCTION.
4. CONFORM TO ALL REQUIREMENTS/STANDARDS OF THE SITE'S MAINE DEP EROSION & SEDIMENT CONTROL BMP MANUAL.

SILT FENCE AND/OR EROSION CONTROL MIX SEDIMENT BARRIERS

SILT FENCE AND/OR EROSION CONTROL MIX SEDIMENT BARRIERS WILL BE INSTALLED ALONG THE DOWN GRADIENT SIDE OF THE PROPOSED GROUND DISTURBANCE AREAS PRIOR TO ANY CONSTRUCTION ACTIVITIES WHERE SLOPES EXCEED 8% OR THERE IS FLOWING WATER BOTH SILT FENCE AND EROSION CONTROL MATTING BERMS SHALL BE USED.

CATCH BASIN PROTECTION

CATCH BASIN PROTECTION WILL BE INSTALLED AT THE FIRST DOWNGRADIENT CATCH BASIN IN STREET ADJACENT TO ANY CONSTRUCTION ACTIVITIES AND IN ALL ONSITE CATCH BASINS UNTIL SITE HAS BEEN COMPLETELY STABILIZED.

CONSTRUCTION PHASE

THE FOLLOWING GENERAL PRACTICES WILL BE IMPLEMENTED TO PREVENT EROSION DURING CONSTRUCTION ON THIS PROJECT:

1. EROSION AND SEDIMENTATION CONTROL BMPS SHALL BE INTALLED PRIOR TO THE COMMENCEMENT OF EARTHWORK ACTIVITIES.
2. ONLY THOSE AREAS UNDER ACTIVE CONSTRUCTION WILL BE CLEARED AND LEFT IN AN UNTREATED OR UNVEGETATED CONDITION. AN AREA NO LARGER THAN WHAT CAN BE MULCHED IN ONE DAY MAY BE OPEN AT ONCE. ONCE CONSTRUCTION OF AN AREA IS COMPLETE, FINAL GRADING, LOAMING AND SEEDING SHALL OCCUR IMMEDIATELY (REFER TO "POST CONSTRUCTION REVEGETATION" SECTION). IF DURING FINAL GRADING, LOAMING AND SEEDING CAN NOT OCCUR IMMEDIATELY, IT SHALL BE DONE PRIOR TO ANY STORM EVENT AND WITHIN 15 DAYS OF COMPLETING CONSTRUCTION IN THE AREA. IF FINAL GRADING, LOAMING AND SEEDING CANNOT OCCUR WITHIN 7 DAYS, OR IF THE AREA IS NOT UNDER ACTIVE CONSTRUCTION FOR A PERIOD LONGER THAN 7 DAYS, SEE ITEM NO. 4 BELOW.
3. PRIOR TO THE START OF CONSTRUCTION IN A SPECIFIC AREA, SILT FENCING SHALL BE INSTALLED ON DOWNGRADIENT PORTIONS OF THE SITE AS LOCATED ON THE PLANS TO PROTECT AGAINST ANY CONSTRUCTION RELATED EROSION.
4. TOPSOIL WILL BE STOCKPILED WHEN NECESSARY IN AREAS WHICH HAVE MINIMUM POTENTIAL FOR EROSION AND WILL BE KEPT AS FAR AS POSSIBLE FROM EXISTING DRAINAGE AREAS AND WETLANDS. ALL STOCKPILES EXPECTED TO REMAIN LONGER THAN 7 DAYS SHALL BE:
   A. TREATED WITH ANCHORED MULCH (WITHIN 5 DAYS OF THE LAST DEPOSIT OF STOCKPILED SOIL).
   B. SEEDED WITH CONSERVATION MIX AND MULCHED IMMEDIATELY.
   C. STOCKPILES SHALL BE EITHER PLACED UPHILL OF AN EXISTING SEDIMENT BARRIER ON THE SITE OR ENCIRCLED BY A HAY BALE OR SILT FENCE BARRIER THE FIRST DAY THAT STOCKPILING COMMENCES.
5. ALL DISTURBED AREAS EXPECTED TO REMAIN LONGER THAN 7 DAYS SHALL BE:
   A. TREATED WITH STRAW AT A RATE OF 70-90 LBS. PER 1000 SQUARE FEET FROM 4/16 TO 10/1, OR AT A RATE OF 150-200 LBS. PER 1000 SQUARE FEET FROM 10/1 TO 4/15.
   B. SEEDED WITH CONSERVATION MIX OF PERENNIAL RYE GRASS (1.0 LBS/1000 SQ.FT.) AND MULCHED IMMEDIATELY. FROM 10/1 TO 4/15, FOLLOW THE SEEDING RATES AS OUTLINED BELOW IN SUB-SECTION 4.D. OF THE "POST CONSTRUCTION REVEGETATION" SECTION.
   C. MONITORED EVERY TWO WEEKS UNTIL SEEDING CAN OCCUR AND REMULCHED AS NEEDED TO PROTECT SLOPES.
6. ALL GRADING WILL BE HELD TO A MAXIMUM 3:1 SLOPE WHERE PRACTICAL. GREATER SLOPES MAY BE USED WHERE THE BANKS ARE PROTECTED WITH SOFT ARMOUR MATTING, EROSION CONTROL MATTING, OR RIPRAP. ALL SLOPES WILL BE STABILIZED WITH PERMANENT SEEDING IMMEDIATELY AFTER FINAL GRADING IS COMPLETE. (IT IS UNDERSTOOD THAT IMMEDIATELY MEANS WITHIN 5 DAYS OF THE COMPLETION OF WORK. SEE POST-CONSTRUCTION REVEGETATION FOR SEEDING SPECIFICATION).
7. APPLICATION RATE MUST BE 2 BALES (70-90 LBS.) PER 1,000 SQUARE FEET OR 1.5 TO 2 TONS (90-100 BALES) PER ACRE TO COVER 75 TO 90% OF THE GROUND SURFACE. DRIVE OVER WITH TRACKED CONSTRUCTION EQUIPMENT ON GRADES OF 5% AND LESS.
8. CONSTRUCTION TRAFFIC WILL BE DIRECTED OVER THE EXISTING SITE ENTRANCE. THE ROAD SHALL BE SWEPT AND VACUUMED DAILY SHOULD SEDIMENT BE TRACKED ONTO IT.
9. ALL AREAS DRAINING TO A STORMWATER FILTER OR BMP SHALL BE STABILIZED PRIOR TO CONSTRUCTION OF FILTER MEDIA TO PREVENT SEDIMENT FROM CLOGGING MEDIA.

DEWATERING

1. ALL DEWATERING DISCHARGE LOCATIONS SHALL BE LOCATED ON RELATIVELY FLAT GROUND AT LEAST 75' FROM STREAMS AND 25' FROM WETLANDS. THE CONTRACTOR SHALL UTILIZE DIRTBAGS, EROSION CONTROL MIX BERMS, OR SIMILAR METHODS FOR FILTRATION OF DEWATERING AND SHALL CONFORM TO THE MAINE EROSION AND SEDIMENT CONTROL BMPS G-1, G-2, AND G-3.

POST CONSTRUCTION REVEGETATION

THE FOLLOWING GENERAL PRACTICES WILL BE IMPLEMENTED TO PREVENT EROSION AS SOON AS AN AREA IS READY TO UNDERGO FINAL GRADING:

1. A MINIMUM OF 6" OF LOAM WILL BE SPREAD OVER DISTURBED AREAS AND GRADED TO A UNIFORM DEPTH AND NATURAL APPEARANCE.
2. LAWN AREAS: "PARK MIX" GRASS SEED BY ALLEN, STERLING & LOTHROP (FALMOUTH, MAINE), OR APPROVED EQUAL.
3. MULCH SHALL BE HAY OR STRAW MULCHES THAT ARE DRY AND FREE FROM UNDESIRABLE SEEDS AND COURSE MATERIALS.
   A. APPLICATION RATE MUST BE 2 BALES (70-90 LBS.) PER 1,000 SQUARE FEET OR 1.5 TO 2 TONS (90-100 BALES) PER ACRE TO COVER 75 TO 90% OF THE GROUND SURFACE.
   B. DRIVE OVER WITH TRACKED CONSTRUCTION EQUIPMENT ON GRADES OF 5% AND LESS.
   C. BLANKET WITH TACKED PHOTODEGRADABLE/BIODEGRADABLE NETTING ON GRADES GREATER THAN 5%.
4. HYDRO-MULCH SHALL CONSIST OF A MIXTURE OF ASPHALT, WOOD FIBRE OR PAPER FIBRE AND WATER, WHICH IS SPRAYED OVER A SEEDED AREA. HYDRO-MULCH SHALL NOT BE USED BETWEEN 10/1 AND 4/15.
5. CONSTRUCTION SHALL BE PLANNED TO ELIMINATE THE NEED FOR SEEDING BETWEEN OCTOBER 1ST AND APRIL 15TH. SHOULD SEEDING BE NECESSARY BETWEEN THESE DATES, THE FOLLOWING PROCEDURE SHALL BE FOLLOWED:
   A. ONLY UNFROZEN LOAM SHALL BE USED.
   B. LOAMING, SEEDING AND MULCHING WILL NOT BE DONE OVER SNOW OR ICE COVER. IF SNOW EXISTS, IT MUST BE REMOVED PRIOR TO PLACEMENT OF SEED.
   C. WHERE PERMANENT SEEDING IS NECESSARY, ANNUAL WINTER RYE (1.2 LBS/1000 S.F.) SHALL BE SOWN INSTEAD OF THE PREVIOUSLY NOTED SEEDING RATE.
   D. WHERE TEMPORARY SEEDING IS REQUIRED, ANNUAL WINTER RYE (2.5 LBS/1000 S.F.) SHALL BE SOWN INSTEAD OF THE PREVIOUSLY NOTED SEEDING RATE.
   E. FERTILIZING, SEEDING AND MULCHING SHALL BE DONE ON LOAM THE DAY THE LOAM IS SPREAD.
   F. HAY MULCH SHALL BE SECURED WITH PHOTODEGRADABLE/BIODEGRADABLE NETTING. TRACKING BY MACHINERY ALONE WILL NOT SUFFICE. WINTER MULCHING RATES, SHALL BE DOUBLE AS SPECIFIED ABOVE IN SUBSECTION 3.A OF THE "POST CONSTRUCTION REVEGETATION" SECTION, SHOULD BE APPLIED DURING THIS PERIOD.
6. FOLLOWING FINAL SEEDING, THE SITE WILL BE INSPECTED EVERY 30 DAYS UNTIL 90% COVER HAS BEEN ESTABLISHED. RESEEDING WILL BE CARRIED OUT BY THE CONTRACTOR WITHIN 10 DAYS OF NOTIFICATION BY THE DESIGN PROFESSIONAL THAT THE EXISTING CATCH IS INADEQUATE.

MONITORING SCHEDULE

THE CONTRACTOR SHALL BE RESPONSIBLE FOR INSTALLING, MONITORING, MAINTAINING, REPAIRING, REPLACING AND REMOVING ALL OF THE EROSION AND SEDIMENTATION CONTROLS OR APPOINTING A QUALIFIED SUBCONTRACTOR TO DO SO. MAINTENANCE MEASURES WILL BE APPLIED AS NEEDED DURING THE ENTIRE CONSTRUCTION CYCLE. IMMEDIATELY FOLLOWING ANY SIGNIFICANT RAINFALL, AND AT LEAST ONCE A WEEK, A VISUAL INSPECTION WILL BE MADE OF ALL EROSION AND SEDIMENTATION CONTROLS AS FOLLOWS:

1. SILT FENCE SHALL BE INSPECTED AND REPAIRED. SEDIMENT TRAPPED BEHIND THESE BARRIERS SHALL BE EXCAVATED WHEN IT REACHES A DEPTH OF 6" AND REDISTRIBUTED TO AREAS UNDERGOING FINAL GRADING.
2. CONSTRUCTION ENTRANCE SHALL BE VISUALLY INSPECTED AND REPAIRED AS NEEDED. ANY AREAS SUBJECT TO RUTTING SHALL BE STABILIZED IMMEDIATELY. IF THE VOIDS OF THE CONSTRUCTION ENTRANCE BECOME FILLED WITH MUD, MORE CRUSHED STONE SHALL BE ADDED AS NEEDED. THE PUBLIC ROADWAY SHALL BE SWEPT AND VACUUMED SHOULD MUD BE DEPOSITED/TRACKED ONTO THEM.

STANDARDS FOR STABILIZING SITES FOR THE WINTER

THE FOLLOWING STANDARDS AND METHODOLOGIES SHALL BE USED FOR STABILIZING THE SITE DURING THE WINTER CONSTRUCTION PERIOD:

1. STANDARD FOR THE TIMELY STABILIZATION OF DISTURBED SLOPES (ANY AREA HAVING A GRADE GREATER THAN 25%) - THE CONTRACTOR WILL SEED AND MULCH ALL SLOPES TO BE VEGETATED BY SEPTEMBER 15TH. IF THE CONTRACTOR FAILS TO STABILIZE ANY SLOPE TO BE VEGETATED BY SEPTEMBER 15TH, THEN THE CONTRACTOR WILL TAKE ONE OF THE FOLLOWING ACTIONS TO STABILIZE THE SLOPE FOR LATE FALL AND WINTER.
   A. STABILIZE THE SOIL WITH TEMPORARY VEGETATION AND EROSION CONTROL MATS: BY OCTOBER 1ST THE CONTRACTOR WILL SEED THE DISTURBED SLOPE WITH WINTER RYE AT A RATE OF 3 POUNDS PER 1000 SQUARE FEET AND THEN INSTALL EROSION CONTROL MATS OR ANCHORED HAY MULCH OVER THE SEEDING AT TWICE THE RATE AS SPECIFIED ABOVE IN SUBSECTION 3.A OF THE "POST CONSTRUCTION REVEGETATION" SECTION. THE CONTRACTOR WILL MONITOR GROWTH OF THE RYE OVER THE NEXT 30 DAYS.
   B. STABILIZE THE SLOPE WITH WOOD-WASTE COMPOST: THE CONTRACTOR WILL PLACE A SIX-INCH LAYER OF WOOD-WASTE COMPOST ON THE SLOPE BY NOVEMBER 15TH. THE CONTRACTOR WILL NOT USE WOOD-WASTE COMPOST TO STABILIZE SLOPES HAVING GRADES GREATER THAN 50% (2H:IV) OR HAVING GROUNDWATER SEEPS ON THE SLOPE FACE.
   C. STABILIZE THE SLOPE WITH STONE RIPRAP: THE CONTRACTOR WILL PLACE A LAYER OF STONE RIPRAP ON THE SLOPE BY NOVEMBER 15TH. THE DEVELOPMENT'S OWNER WILL HIRE A REGISTERED PROFESSIONAL ENGINEER TO DETERMINE THE STONE SIZE NEEDED FOR STABILITY ON THE SLOPE AND TO DESIGN A FILTER LAYER FOR UNDERNEATH THE RIPRAP.

STANDARD FOR THE TIMELY STABILIZATION OF DISTURBED SOILS - BY SEPTEMBER 15TH THE CONTRACTOR WILL SEED AND MULCH ALL DISTURBED SOILS ON THE SITE. IF THE CONTRACTOR FAILS TO STABILIZE THESE SOILS BY THIS DATE, THEN THE CONTRACTOR WILL TAKE ON OF THE FOLLOWING ACTIONS TO STABILIZE THE SOIL FOR LATE FALL AND WINTER.

   A. STABILIZE THE SOIL WITH TEMPORARY VEGETATION: BY OCTOBER 1ST THE CONTRACTOR WILL SEED THE DISTURBED SOIL WITH WINTER RYE AT A SEEDING RATE OF 3 POUNDS PER 1000 SQUARE FEET, LIGHTLY MULCH THE SEEDED SOIL WITH HAY OR STRAW AT 75 POUNDS PER 1000 SQUARE FEET, AND ANCHOR THE MULCH WITH PLASTIC NETTING. THE CONTRACTOR WILL MONITOR GROWTH OF THE RYE OVER THE NEXT 30 DAYS. IF THE RYE FAILS TO GROW AT LEAST THREE INCHES OR FAILS TO COVER AT LEAST 75% OF THE DISTURBED SOIL BEFORE NOVEMBER, 1, THEN THE CONTRACTOR WILL MULCH THE AREA FOR OVER-WINTER PROTECTION AS DESCRIBED IN ITEM III OF THIS STANDARD.
   B. STABILIZE THE SOIL WITH SOD: THE CONTRACTOR WILL STABILIZE THE DISTURBED SOIL WITH PROPERLY INSTALLED SOD BY OCTOBER 1ST. PROPER INSTALLATION INCLUDES THE CONTRACTOR PINNING THE SOD ONTO THE SOIL WITH WIRE PINS, ROLLING THE SOD TO GUARANTEE CONTACT BETWEEN THE SOD AND UNDERLYING SOIL, AND WATERING THE SOD TO PROMOTE ROOT GROWTH INTO THE DISTURBED SOIL.
   C. STABILIZE THE SOIL WITH MULCH: BY NOVEMBER 15TH THE CONTRACTOR WILL MULCH THE DISTURBED SOIL BY SPREADING HAY OR STRAW AT A RATE OF AT LEAST 150 POUNDS PER 1000 SQUARE FEET ON THE AREA SO THAT NO SOIL IS VISIBLE THROUGH THE MULCH. IMMEDIATELY AFTER APPLYING THE MULCH, THE CONTRACTOR WILL ANCHOR THE MULCH WITH NETTING OR OTHER METHOD TO PREVENT WIND FROM MOVING THE MULCH OFF THE DISTURBED SOIL.

EROSION CONTROL REMOVAL

AN AREA IS CONSIDERED STABLE IF IT IS PAVED OR IF 90% GROWTH OF PLANTED SEEDS IS ESTABLISHED. ONCE AN AREA IS CONSIDERED STABLE, THE EROSION CONTROL MEASURES CAN BE REMOVED AS FOLLOWS:

1. SILT FENCE: SILT FENCE SHALL BE DISPOSED OF LEGALLY AND PROPERLY OFF-SITE. ALL SEDIMENT TRAPPED BEHIND THESE CONTROLS SHALL BE DISTRIBUTED TO AN AREA UNDERGOING FINAL GRADING OR REMOVED AND RELOCATED OFF-SITE.
2. STABILIZED CONSTRUCTION ENTRANCE: THE STABILIZED CONSTRUCTION ENTRANCE SHALL BE REMOVED ONCE THE COMPACTED ROADWAY BASE IN IN PLACE. STONE AND SEDIMENT FROM THE CONSTRUCTION ENTRANCE SHALL BE REDISTRIBUTED TO AN AREA UNDERGOING GRADING OR REMOVED AND RELOCATED OFFSITE.
3. MISCELLANEOUS: ONCE ALL THE TRAPPED SEDIMENTS HAVE BEEN REMOVED FROM THE TEMPORARY SEDIMENTATION DEVICES THE DISTURBED AREAS MUST BE REGRADED IN AN AESTHETIC MANNER TO CONFORM TO THE SURROUNDING TOPOGRAPHY. ONCE GRADED THESE DISTURBED AREAS MUST BE LOAMED (IF NECESSARY), FERTILIZED, SEEDED AND MULCHED IN ACCORDANCE WITH THE RATES PREVIOUSLY STATED.

THE ABOVE EROSION CONTROLS MUST BE REMOVED WITHIN 30 DAYS OF FINAL STABILIZATION OF THE SITE. CONFORMANCE WITH THIS PLAN AND FOLLOWING THESE PRACTICES WILL RESULT IN A PROJECT THAT COMPLIES WITH THE STATE REGULATIONS AND THE STANDARDS OF THE NATURAL RESOURCES PROTECTION ACT, AND WILL PROTECT WATER QUALITY IN AREAS DOWNSTREAM ROM THE PROJECT.

MAINE CONSTRUCTION GENERAL PERMIT REQUIRED

SUBMISSION OF A MAINE CONSTRUCTION GENERAL PERMIT (MCGP) IS REQUIRED PRIOR TO COMMENCEMENT OF ANY EXCAVATION ACTIVITIES.

INSPECTION AND MAINTENANCE (APPENDIX B)

1. INSPECTION AND MAINTENANCE REQUIREMENTS: INSPECT DISTURBED AND IMPERVIOUS AREAS, EROSION AND STORMWATER CONTROL MEASURES, AREAS USED FOR STORAGE THAT ARE EXPOSED TO PRECIPITATION, AND LOCATIONS WHERE VEHICLES ENTER OR EXIT THE SITE. INSPECT THESE AREAS AT LEAST ONCE A WEEK AS WELL AS BEFORE AND AFTER A SIGNIFICANT STORM EVENT (0.5 INCHES OF RAINFALL IN A 24-HOUR PERIOD) AND PRIOR TO COMPLETION OF PERMANENT STABILIZATION MEASURES. A PERSON WITH KNOWLEDGE OF EROSION AND STORMWATER CONTROL, INCLUDING THE STANDARDS IN THE MCGP AND ANY DEPARTMENTAL COMPANION DOCUMENT TO THE MCGP, MUST CONDUCT THE INSPECTION. THIS PERSON MUST BE IDENTIFIED IN THE INSPECTION LOG. IF BEST MANAGEMENT PRACTICES (BMPS) NEED TO BE MODIFIED OR IF ADDITIONAL BMPS ARE NECESSARY, IMPLEMENTATION MUST BE STARTED BY THE END OF THE NEXT WORKIN DAY AND COMPLETED WITHIN 7 CALENDAR DAYS AND PRIOR TO ANY STORM EVENT (RAINFALL). ALL MEASURES MUST BE MAINTAINED IN EFFECTIVE OPERATING CONDITION UNTIL AREAS AREA PERMANENTLY STABILIZED. DOCUMENTATION OF CORRECTION ACTIONS SHALL BE MAINTAINED WITH THE INSPECTION FORMS.
2. INSPECTION LOG (REPORT): A LOG (REPORT) MUST BE KEPT SUMMARIZING THE SCOPE OF THE INSPECTION, NAME(S) AND QUALIFICATIONS OF THE PERSONNEL MAKING THE INSPECTION, THE DATE(S) OF THE INSPECTION, AND MAJOR OBSERVATIONS RELATING TO OPERATION OF EROSION AND SEDIMENTATION CONTROLS AND POLLUTION PREVENTION MEASURES. MAJOR OBSERVATIONS MUST INCLUDE BMPS THAT NEED MAINTENANCE, BMPS THAT FAILED TO OPERATE AS DESIGNED OR PROVED INADEQUATE FOR A PARTICULAR LOCATION, AND LOCATIONS(S) WHERE ADDITIONAL BMPS ARE NEEDED. FOR EACH BMP REQUIRING MAINTENANCE, BMP NEEDING REPLACEMENT, AND LOCATION NEEDING ADDITIONAL BMPS, NOTE IN THE INSPECTION LOG THE CORRECT ACTION TAKEN AND WHEN IT WAS TAKEN. THE LOG MUST BE MADE ACCESSIBLE TO THE DEPARTMENT STAFF AND A COPY MUST BE PROVIDED UPON REQUEST. THE PERMITTEE SHALL RETAIN A COPY OF THE LOG FOR A PERIOD OF AT LEAST THREE YEARS FROM THE COMPLETION OF THE PERMANENT STABILIZATION.

HOUSEKEEPING (APPENDIX C)

1. SPILL PREVENTION: CONTROLS MUST BE USED TO PREVENT POLLUTANTS FROM CONSTRUCTION AND WASTE MATERIALS STORED ON SITE TO ENTER STORMWATER, WHICH INCLUDES STORAGE PRACTICES TO MINIMIZE EXPOSURE OF THE MATERIALS TO STORMWATER. THE SITE CONTRACTOR OR OPERATOR MUST DEVELOP, AND IMPLEMENT AS NECESSARY, APPROPRIATE SPILL PREVENTION, CONTAINMENT, AND RESPONSE PLANNING MEASURES.

NOTE: ANY SPILL OR RELEASE OF TOXIC OR HAZARDOUS SUBSTANCES MUST BE REPORTED TO THE DEPARTMENT. FOR OIL SPILLS, CALL 1-800-482-0777 WHICH IS AVAILABLE 24 HOURS A DAY. FOR SPILLS OF TOXIC OR HAZARDOUS MATERIAL, CALL 1-800-452-4664 WHICH IS AVAILABLE 24 HOURS A DAY. FOR MORE INFORMATION, VISIT THE DEPARTMENT'S WEBSITE AT: HTTP://WWW.MAINE.GOV/DEP/SPILLS/EMERGSPILLRESP/

2. GROUNDWATER PROTECTION: DURING CONSTRUCTION, LIQUID PETROLEUM PRODUCTS AND OTHER HAZARDOUS MATERIALS WITH THE POTENTIAL TO CONTAMINATE GROUNDWATER MAY NOT BE STORED OR HANDLED IN AREAS OF THE SITE DRAINING TO AN INFILTRATION AREA. AN "INFILTRATION AREA" IS ANY AREA OF THE SITE THAT BY DESIGN OR AS A RESULT OF SOILS, TOPOGRAPHY AND OTHER RELEVANT FACTORS ACCUMULATES RUNOFF THAT INFILTRATES INTO THE SOIL. DIKES, BERMS, SUMPS, AND OTHER FORMS OF SECONDARY CONTAINMENT THAT PREVENT DISCHARGE TO GROUNDWATER MAY BE USED TO ISOLATE PORTIONS OF THE SITE FOR THE PURPOSES OF STORAGE AND HANDLING OF THESE MATERIALS. ANY PROJECT PROPOSING INFILTRATION OF STORMWATER MUST PROVIDE ADEQUATE PRE-TREATMENT OF STORMWATER PRIOR TO DISCHARGE OF STORMWATER TO THE INFILTRATION AREA, OR PROVIDE FOR TREATMENT WITHIN THE INFILTRATION AREA, IN ORDER TO PREVENT THE ACCUMULATION OF FINES, REDUCTION IN INFILTRATION RATE, AND CONSEQUENT FLOODING AND DESTABILIZATION.

NOTE: LACK OF APPROPRIATE POLLUTANT REMOVAL BEST MANAGEMENT PRACTICES (BMPS) MAY RESULT IN VIOLATIONS OF THE GROUNDWATER QUALITY STANDARD ESTABLISHED BY 38 M.R.S.A. §465-C(1).

3. FUGITIVE SEDIMENT AND DUST: ACTIONS MUST BE TAKEN TO ENSURE THAT ACTIVITIES DO NOT RESULT IN NOTICEABLE EROSION OF SOILS OR FUGITIVE DUST EMISSIONS DURING OR AFTER CONSTRUCTION. OIL MAY NOT BE USED FOR DUST CONTROL, BUT OTHER WATER ADDITIVES MAY BE CONSIDERED AS NEEDED. A STABILIZED CONSTRUCTION ENTRANCE (SCE) SHOULD BE INCLUDED TO MINIMIZE TRACKING OF MUD AND SEDIMENT. IF OFF-SITE TRACKING OCCURS, PUBLIC ROADS SHOULD BE SWEPT IMMEDIATELY AND NO LESS THAN ONCE A WEEK AND PRIOR TO SIGNIFICANT STORM EVENTS. OPERATIONS DURING DRY MONTHS, THAT EXPERIENCE FUGITIVE DUST PROBLEMS, SHOULD WET DOWN UNPAVED ACCESS ROADS ONCE A WEEK OR MORE FREQUENTLY AS NEEDED WITH A WATER ADDITIVE TO SUPPRESS FUGITIVE SEDIMENT AND DUST.

NOTE: DEWATERING A STREAM WITHOUT A PERMIT FROM THE DEPARTMENT MAY VIOLATE STATE WATER QUALITY STANDARDS AND THE NATURAL RESOURCES PROTECTION ACT.

4. DEBRIS AND OTHER MATERIALS: MINIMIZE THE EXPOSURE OF CONSTRUCTION DEBRIS, BUILDING AND LANDSCAPING MATERIALS, TRASH, FERTILIZERS, PESTICIDES, HERBICIDES, DETERGENTS, SANITARY WASTE AND OTHER MATERIALS TO PRECIPITATION AND STORMWATER RUNOFF. THESE MATERIALS MUST BE PREVENTED FROM BECOMING A POLLUTANT SOURCE.

NOTE: TO PREVENT THESE MATERIALS FROM BECOMING A SOURCE OF POLLUTANTS, CONSTRUCTION AND POST-CONSTRUCTION ACTIVITIES RELATED TO A PROJECT MAY BE REQUIRED TO COMPLY WITH APPLICABLE PROVISION OF RULES RELATED TO SOLID, UNIVERSAL, AND HAZARDOUS WASTE, INCLUDING, BUT NOT LIMITED TO, THE MAINE SOLID WASTE AND HAZARDOUS WASTE MANAGEMENT RULES; MAINE HAZARDOUS WASTE MANAGEMENT RULES; MAINE OIL CONVEYANCE AND STORAGE RULES; AND MAINE PESTICIDE REQUIREMENTS.

5. EXCAVATION DEWATERING: EXCAVATION DEWATERING IS THE REMOVAL OF WATER FROM TRENCHES, FOUNDATIONS, COFFER DAMS, PONDS, AND OTHER AREAS WITHIN THE CONSTRUCTION AREA THAT RETAIN WATER AFTER EXCAVATION. IN MOST CASES THE COLLECTED WATER IS HEAVILY SILTED AND HINDERS CORRECT AND SAFE CONSTRUCTION PRACTICES. THE COLLECTED WATER REMOVED FROM THE PONDED AREA, EITHER THROUGH GRAVITY OR PUMPING, MUST BE SPREAD THROUGH NATURAL WOODED BUFFERS OR REMOVED TO AREAS THAT ARE SPECIFICALLY DESIGNED TO COLLECT THE MAXIMUM AMOUNT OF SEDIMENT POSSIBLE, LIKE A COFFERDAM SEDIMENTATION BASIN. AVOID ALLOWING THE WATER TO FLOW OVER DISTURBED AREAS OF THE SITE. EQUIVALENT MEASURES MAY BE TAKEN IF APPROVED BY THE DEPARTMENT.

NOTE: DEWATERING CONTROLS ARE DISCUSSED IN THE "MAINE EROSION AND SEDIMENT CONTROL BMPS, MAINE DEPARTMENT OF ENVIRONMENTAL PROTECTION."

6. AUTHORIZED NON-STORMWATER DISCHARGES: IDENTIFY AND PREVENT CONTAMINATION BY NON-STORMWATER DISCHARGES. WHERE ALLOWED NON-STORMWATER DISCHARGES EXIST, THEY MUST BE IDENTIFIED AND STEPS SHOULD BE TAKEN TO ENSURE THE IMPLEMENTATION OF APPROPRIATE POLLUTION PREVENTION MEASURES FOR THE NON-STORMWATER COMPONENT(S) OF THE DISCHARGE. AUTHORIZED NON-STORMWATER DISCHARGES ARE:.
   - DISCHARGES FROM FIREFIGHTING ACTIVITY;
   - FIRE HYDRANT FLUSHINGS;
   - VEHICLE WASHWATER IF DETERGENTS ARE NOT USED AND WASHING IS LIMITED TO THE EXTERIOR OF VEHICLES (ENGINE, UNDERCARRIAGE, AND TRANSMISSION WASHING IS PROHIBITED);
   - DUST CONTROL RUNOFF IN ACCORDANCE WITH PERMIT CONDITIONS AND APPENDIX (C)(3);
   - ROUTINE EXTERNAL BUILDING WASHDOWN, NOT INCLUDING SURFACE PAINT REMOVAL, THAT DOES NOT INVOLVE DETERGENTS;
   - PAVEMENT WASHWATER (WHERE SPILLS/LEAKS OF TOXIC OR HAZARDOUS MATERIALS HAVE NOT OCCURRED, UNLESS ALL SPILLED MATERIAL HAD BEEN REMOVED) IF DETERGENTS ARE NOT USED;
   - UNCONTAMINATED AIR CONDITIONING OR COMPRESSOR CONDENSATE;
   - UNCONTAMINATED GROUNDWATER OR SPRING WATER;
   - FOUNDATION OR FOOTER DRAIN-WATER WHERE FLOWS ARE NOT CONTAMINATED;
   - UNCONTAMINATED EXCAVATION DEWATERING (SEE REQUIREMENTS IN APPENDIX C(5));
   - POTABLE WATER SOURCES INCLUDING WATERLINE FLUSHINGS; AND
   - LANDSCAPE IRRIGATION
7. UNAUTHORIZED NON-STORMWATER DISCHARGES: THE DEPARTMENT'S APPROVAL UNDER THIS CHAPTER DOES NOT AUTHORIZE A DISCHARGE THAT IS MIXED WITH A SOURCE OF NON-STORMWATER, OTHER THAN THOSE DISCHARGES IN COMPLIANCE WITH APPENDIX C (6). SPECIFICALLY, THE DEPARTMENT'S APPROVAL DOES NOT AUTHORIZE DISCHARGES OF THE FOLLOWING:
   - WASTEWATER FROM THE WASHOUT OR CLEANOUT OF CONCRETE, STUCCO, PAINT, FORM RELEASE OILS, CURING COMPOUNDS OR OTHER CONSTRUCTION MATERIALS;
   - FUELS, OILS OR OTHER POLLUTANTS USED IN VEHICLE AND EQUIPMENT OPERATION AND MAINTENANCE;
   - SOAPS, SOLVENTS, OR DETERGENTS USED IN VEHICLE AND EQUIPMENT WASHING; AND
   - TOXIC OR HAZARDOUS SUBSTANCES FROM A SPILL OR OTHER RELEASE.

ADDITIONAL REQUIREMENTS: ADDITIONAL REQUIREMENTS MAY BE APPLIED ON A SITE-SPECIFIC BASIS.

CONSTRUCTION OVERSITE

THE APPLICANT WILL RETAIN THE SERVICES OF A PROFESSIONAL ENGINEER TO INSPECT THE CONSTRUCTION AND STABILIZATION FOR ALL STORMWATER MANAGEMENT STRUCTURES. IF NECESSARY, THE INSPECTING ENGINEER WILL INTERPRET THE POND'S CONSTRUCTION PLAN FOR THE CONTRACTOR. ONCE ALL STORMWATER MANAGEMENT STRUCTURES ARE CONSTRUCTED AND STABILIZED, THE INSPECTING ENGINEER WILL NOTIFY THE DEPARTMENT IN WRITING WITHIN

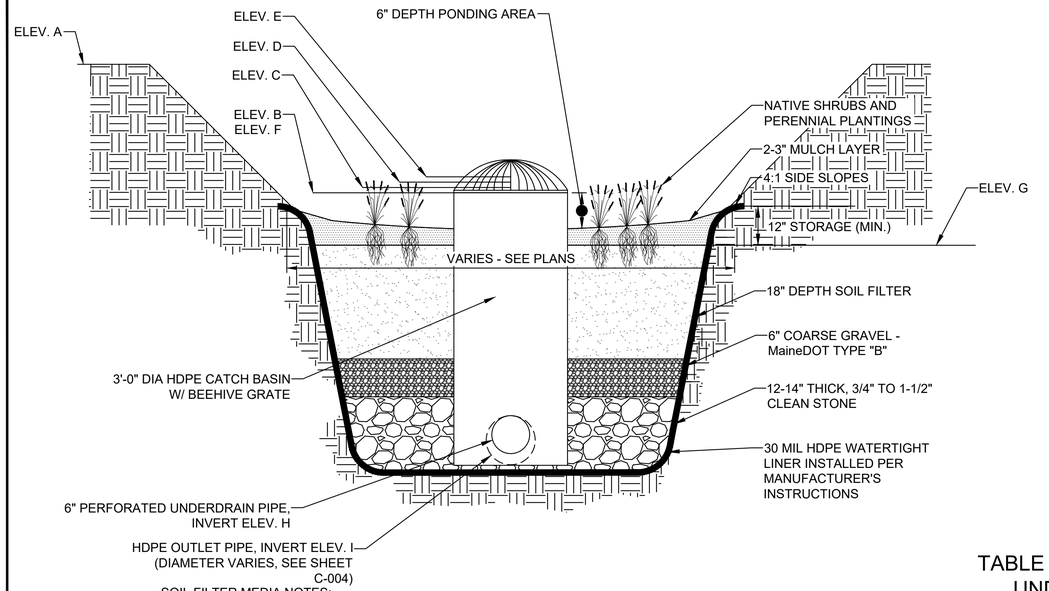

SOIL FILTER MEDIA NOTES:

SOIL FILTER MEDIA SHALL CONFORM TO MAINE DEP SOIL FILTER MEDIA OPTION 1, PER MAINE DEP STORMWATER BMP MANUAL CHAPTER 7.1. AS FOLLOWS:

1.1. SOIL FILTER MEDIA SHALL CONSIST OF A SILTY SAND SOIL OR SOIL MIXTURE COMBINED WITH A MATURE, MODERATELY FINE SHREDDED BARK OR WOOD FIBER MULCH.
1.2. THE RESULTING MIX SHALL CONTAIN NO LESS THAN 10% BY DRY WEIGHT ORGANIC MATERIAL.
1.3. THE RESULTING MIX SHALL CONTAIN 8% TO 12% PASSING THE NO. 200 SIEVE.
1.4. THE RESULTING MIX SHALL CONTAIN A MAXIMUM CLAY CONTENT OF 2%.

UNDERDRAIN OUTLET VALVE CALIBRATION NOTES:

AFTER THE COMPLETION OF INSTALLATION OF THE SOIL FILTER MEDIA, THE CONTRACTOR SHALL PERFORM THE FOLLOWING PROCEDURE TO CALIBRATE THE UNDERDRAIN OUTLET VALVE TO ACHIEVE THE 0.75"/HOUR DESIGN FLOW RATE.

1. BEGIN WITH VALVE HALF-OPEN.
2. CAREFULLY FLOOD THE BASIN UNTIL THERE IS 18" OF WATER STORED ABOVE THE SOIL FILTER MEDIA (UP TO THE HEIGHT OF OUTLET STRUCTURE RIM) WITHOUT CAUSING EROSION OF THE SOIL FILTER MEDIA.
3. RECORD THE TIME IT TAKES FOR THE 18" OF WATER TO DRAIN TO THE TOP OF THE SOIL FILTER MEDIA. THE TARGET DRAINDOWN TIME IS 24 HOURS.
4. IF THE 18" OF WATER DRAINS IN LESS THAN 24 HOURS, CLOSE THE VALVE SLIGHTLY AND REPEAT STEPS 2 & 3 ABOVE.
5. IF THE 18" OF WATER DRAINS IN MORE THAN 24 HOURS, OPEN THE VALVE SLIGHTLY AND REPEAT STEPS 2 & 3 ABOVE.
6. REPEAT THIS PROCESS UNTIL THE 18" OF WATER DRAINS IN 24 HOURS.

GRASSED UNDERDRAINED SOIL FILTER SCHEDULE

GRASSED UNDERDRAINED SOIL FILTER ID	EMBKMT. ELEV. [A]	WATER QUALITY STORM ELEV. [B]	2-YR STORM ELEV. [C]	10-YR STORM ELEV. [D]	25-YR STORM ELEV. [E]	TOP OF OUTLET STRUCT ELEV. [F]	BOTTOM OF STORAGE ELV. [G]	INTERIOR UNDERDRAIN INVERT (START) [H]	UNDERDRAIN OUTLET INVERT [I]	FILTER AREA (SQ. FT.)
SF-A	24.50	23.50	23.62	23.67	23.71	23.50	23.00	19.25	18.75	580
SF-B	18.50	18.00	18.11	18.16	18.19	18.00	17.50	14.25	13.75	890

2 BIORETENTION FILTER CELL

NO SCALE

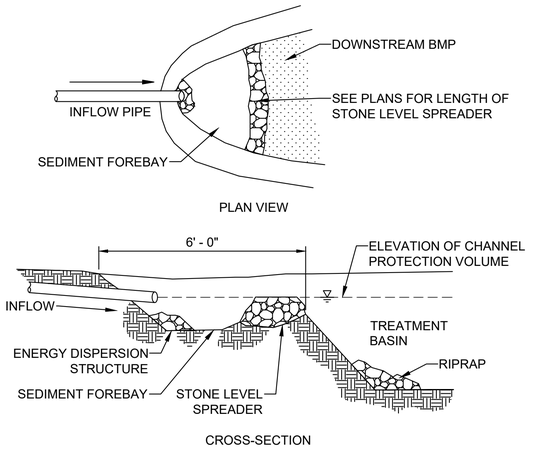

NOTES:
1. STONE SHALL BE AASHTO #3 STONE, UNIFORMLY GRADED, CLEAN.

3 LEVEL SPREADER DESIGN

NO SCALE

TABLE 1: MDOT SPECIFICATIONS FOR UNDERDRAINS (MDOT #703.22)

SIEVE SIZE	% BY WEIGHT
UNDERDRAIN TYPE B	
0'-1"	90-100
0'-0 1/2"	75-100
#4	50-100
#20	15-80
#50	0-15
#200	0-5

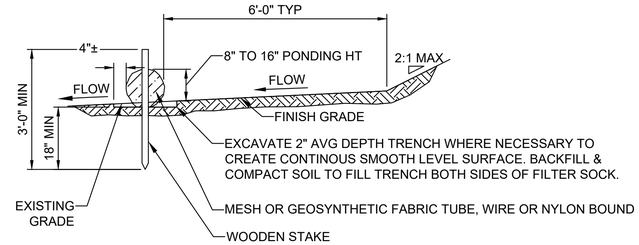

NOTES:
1. FILTER SOCKS SHALL BE INSTALLED IN CONTINUOUS SEGMENT AND IN FULL CONTACT WITH THE GROUND ON A SMOOTH LEVEL SURFACE.
2. FOLLOW MANUFACTURER'S REQUIREMENTS FOR INSTALLATION, MAINTENANCE AND REMOVAL OF FILTER SOCK MATERIALS.
3. AREAS DISTURBED BY EROSION BARRIERS SHALL BE STABILIZED AFTER REMOVAL.

1 SEDIMENT BARRIER - FILTER SOCK

NO SCALE

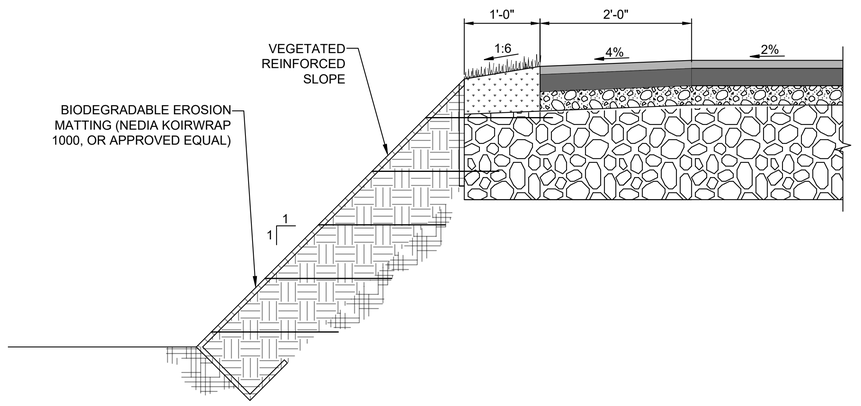

4 1:1 VEGETATED REINFORCED SLOPE

NO SCALE

FOR PERMIT

Attention: 0 1" — If this scale bar does not measure 1" then drawing is not original scale.

Designed:	DJB
Drawn:	JAM
Checked:	BJB
Approved:	BMM
P.E. No:	13033
GEI Project	2203703

GEI Consultants
GEI CONSULTANTS, INC.
5 MILK STREET
PORTLAND, ME 04101
(207)797-8901

UNIVERSITY OF NEW ENGLAND
11 HILLS BEACH RD.
BIDDEFORD, MAINE

UNIVERSITY OF NEW ENGLAND MARINE SCIENCE CENTER PIER
11 HILLS BEACH ROAD
BIDDEFORD, YORK COUNTY, MAINE

NO	DATE	ISSUE/REVISION	APP
6	8/14/2024	REVISED PERMIT SET	DJB
5	6/27/2024	REVISED PERMIT SET	DJB
4	9/14/2023	DEP PERMIT SET	DJB
3	6/28/2023	75% DESIGN SUBMISSION	DJB
2	2/15/2023	305 DESIGN SUBMISSION	DJB
1	12/9/2022	15% DESIGN SUB REV	DJB
0	11/11/2022	15% DESIGN SUBMISSION	DJB

SHEET NAME: **EROSION CONTROL DETAILS I**

SHEET NO.: **C-013**

BANNON, DAN \\geiconsultants.com\data\Data_Storage\Working\UNIVERSITY OF NEW ENGLAND\2203703 UNE Marine Science Center Pier\00_CAD\Design\Sheets\2203703-C-DETAILS.dwg - 8/14/2024

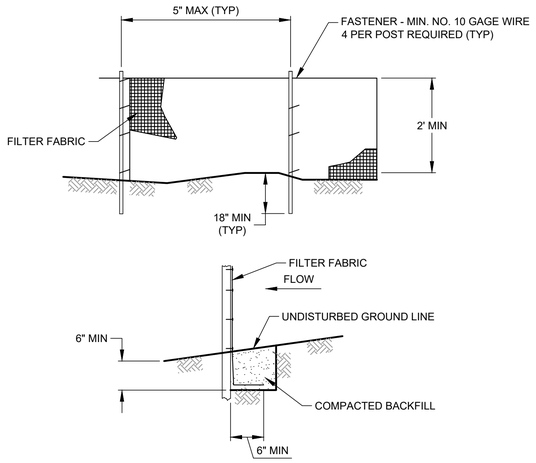

NOTES:
1. TEMPORARY SEDIMENT FENCE SHALL BE INSTALLED PRIOR TO ANY GRADING WORK IN THE AREA TO BE PROTECTED. THEY SHALL BE MAINTAINED THROUGHOUT THE CONSTRUCTION PERIOD AND REMOVED IN CONJUNCTION WITH THE FINAL GRADING AND SITE STABILIZATION.
2. FILTER FABRIC SHALL MEET THE REQUIREMENTS OF MATERIAL SPECIFICATION 592 GEOTEXTILE TABLE 1 OR 2, CLASS L WITH EQUIVALENT OPENING SIZE OF AT LEAST 30 FOR NONWOVEN AND 50 FOR WOVEN.
3. FENCE POSTS SHALL BE EITHER WOOD POST WITH A MINIMUM CROSS-SECTIONAL AREA OF 3 SQ. IN. OR A STANDARD STEEL POST.

5 SILT FENCE

NO SCALE

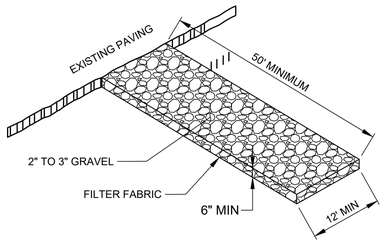

8 STABILIZED CONSTRUCTION ENTRANCE

NO SCALE

NOTES:
1. THE ENTRANCE/EXIT PAD SHOULD HAVE A LENGTH OF 50 FEET OR MORE AND A 12-FOOT MINIMUM WIDTH (OR AS APPROPRIATE TO CONTAIN THE WHEEL BASE OF CONSTRUCTION VEHICLES PLUS 3 FEET ON EITHER SIDE).
2. THE PAD SHOULD BE 6 INCHES OR MORE THICK WITH ANGULAR AGGREGATE (2-3 INCH DIAMETER). APPROPRIATE RECLAIMED CONCRETE MATERIAL MAY BE USED.
3. THE AGGREGATE SHOULD BE PLACED OVER A GEOTEXTILE FILTER TO PREVENT THE STONES FROM PUSHING INTO THE NATIVE SOIL.
4. AT THE BOTTOM OF SLOPES, A DIVERSION RIDGE SHOULD BE PROVIDED TO INTERCEPT RUNOFF.
5. BERMS MAY BE NECESSARY TO DIVERT WATER AROUND ANY EXPOSED SOIL, AND RUNOFF SHOULD BE DIRECTED TO A SEDIMENT TRAP.
6. THE WHEELS OF CONSTRUCTION EQUIPMENT MAY BE WASHED PRIOR TO EXITING THE SITE. WASHING SHOULD BE PERFORMED IN AN AREA THAT DRAINS TO A SEDIMENT TRAP OR BASIN.
7. THE PAD SHOULD BE INSPECTED WEEKLY, AND BEFORE AND AFTER EACH STORM. THE PAD MAY HAVE TO BE REPLACED IF THE VOIDS BECOME FILLED WITH SEDIMENT. STREET SWEEPING MAY BE NECESSARY

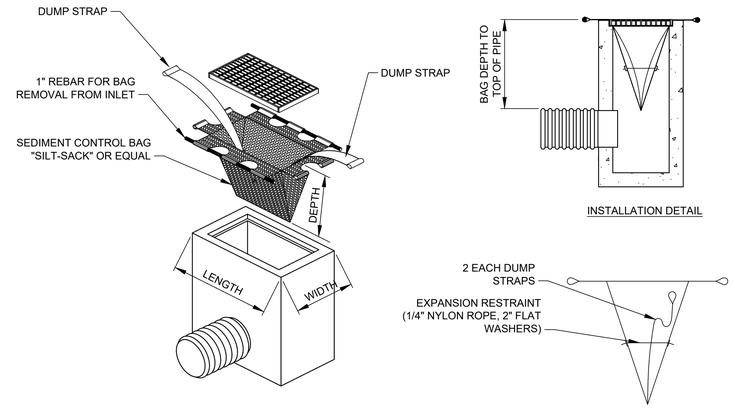

CB STYLE	LENGTH	WIDTH	DEPTH
TYPE 1 CB	2'-0"	1'-8"	VARIES
TYPCE 1 CCI	2'-5 1/2"	2'-0"	VARIES
USA G2	2'-8 1/2"	2'-3 1/2"	VARIES

NOTES:
1. THE DIMENSION CHART ABOVE IS FOR STANDARD CATCH BASINS AND INLETS ONLY. THE CONTRACTOR IS RESPONSIBLE FOR PROVIDING THE CORRECT SIZE DEVICE FOR EACH INLET.
2. FOR NON-STANDARD CATCH BASINS AND INLETS, THE CONTRACTOR SHALL MEASURE DIMENSIONS IN THE FIELD AND ORDER THE APPROPRIATE SIZE(S).
3. THE INLET SEDIMENT CONTROL DEVICE SHALL BE OF HIGH FLOW DESIGN (200 GAL/MIN/FT), AS PER THE MANUFACTURER'S SPECS.
4. THE SEDIMENT CONTROL DEVICE SHALL BE INSPECTED DAILY BY THE CONTRACTOR AND MAINTAINED A MINIMUM ONCE PER MONTH OR WITHIN THE 48 HOURS FOLLOWING A STORM EVENT. FILTER SHALL BE CLEANED IN A MANNER WHICH ENSURES THAT ALL SEDIMENT REMAINS ON SITE.
5. SUBSTITUTION OF A SHEET OF FILTER FABRIC PLACED OVER THE OPENING OF THE INLET IS NOT APPROVED.
6. RECESSED CURB INLET CATCH BASINS MUST BE BLOCKED WHEN USING FILTER FABRIC INLET SACKS, SIZE OF FILTER INLET SACK TO BE DETERMINED BY MANUFACTURER.
7. THE FILTER SHALL BE REPLACED OR CLEANED WHEN THE BAG BECOMES HALF FULL.
8. SEE INLET PROTECTION NOTES STD. DETAIL E3.

6 SILT SACK INLET PROTECTION

SCALE: N.T.S.

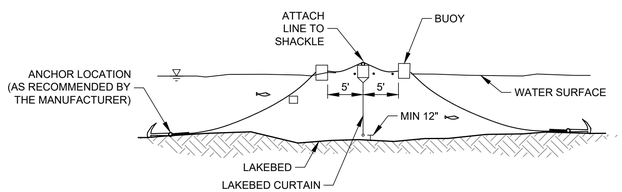

NOTES:
1. FLOATING TURBIDITY BARRIER CONSTRUCTION SHALL CONFORM WITH RELEVANT LOCAL AND STATE STANDARDS FOR SOIL EROSION AND SEDIMENT CONTROL.
2. FLOATING TURBIDITY BARRIER WILL BE INSPECTED AND MAINTAINED DAILY.

9 FLOATING TURBIDITY BARRIER

SCALE: N.T.S.

NOTES:
1. THE SOIL SURFACE SHOULD BE FINELY GRADED AND SMOOTH FOR THE BLANKET TO HAVE DIRECT CONTACT WITH THE SOIL AND TO PREVENT UNDERMINING. EROSION CONTROL BLANKETS PERFORM BEST ON LOAMY SOILS AND SHOULD NOT BE USED ON ROCKY SITES OR SHALLOW SOILS.
2. SEED SHOULD BE SOWN BEFORE INSTALLING THE EROSION CONTROL BLANKET.
3. ALWAYS UNROLL THE BLANKET DOWNHILL WITHOUT STRETCHING AND ANCHOR THE UPSLOPE EDGE IN A 12 INCH DEEP TRENCH THAT IS BACKFILLED AND TAMPED.
4. OVERLAP SHINGLE STYLE A MINIMUM OF 12 INCHES AT THE TOP OF EACH ROW AND 4 INCHES AT THE EDGES OF PARALLEL ROWS. ANCHOR ALONG THE OVERLAP WITH A MAXIMUM SPACING OF 3 FEET OR AS REQUIRED BY THE MANUFACTURER.

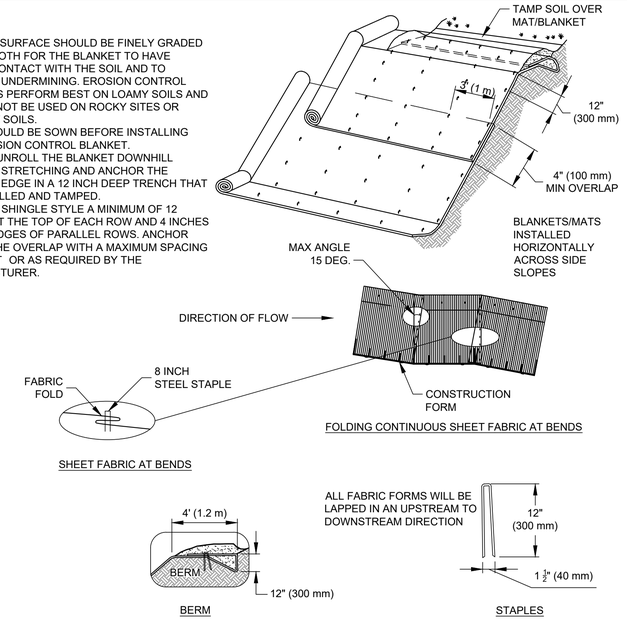

7 BIODEGRADABLE STABILIZATION MATTING

NO SCALE

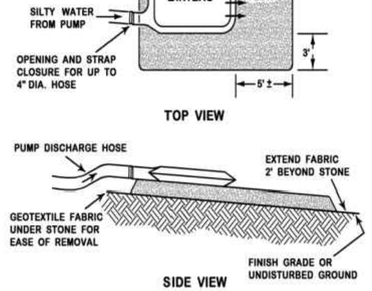

NOTES:
1. INSTALL THE FILTER BAG PRIOR TO INITIATING ANY ACTIVITIES WHICH WILL REQUIRE DEWATERING.
2. THE TYPE OF FABRIC SHOULD BE BASED ON THE SIZE OF SOIL PARTICLES TO BE TRAPPED (I.E. A WOVEN MATERIAL FOR COARSE PARTICLES AND A NONWOVEN MATERIAL FOR FINER PARTICLES).
3. A FILTER BAG SHOULD BE LOCATED IN AN AREA MOSTLY LEVEL (WITH LESS THAN 5% SLOPE). A PAD OF CRUSHED GRAVEL MAY BE PROVIDED.
4. AVOID DISCHARGING TO AN AREA THAT IS BARE OF VEGETATION OR NEWLY VEGETATED. ANY SIGN OF EROSION OR CHANNELIZATION FROM THE DISCHARGED WATER REQUIRES IMMEDIATELY CORRECTION.
5. FILTER BAGS HAVE A FINITE CAPACITY FOR SEDIMENT COLLECTION AND MAY BE PRONE TO PLUGGING. AVOID OVER-PRESSURIZING THE BAG OR IT MAY BURST.

10 GEOTEXTILE FILTER BAG

NO SCALE

FOR PERMIT

Attention:
0 1"
If this scale bar does not measure 1" then drawing is not original scale.

Designed:	DJB
Drawn:	JAM
Checked:	BJB
Approved:	BMM
P.E. No:	13033
GEI Project	2203703

GEI Consultants
GEI CONSULTANTS, INC.
5 MILK STREET
PORTLAND, ME 04101
(207)797-8901

UNIVERSITY OF NEW ENGLAND
11 HILLS BEACH RD.
BIDDEFORD, MAINE

UNIVERSITY OF NEW ENGLAND MARINE SCIENCE CENTER PIER
11 HILLS BEACH ROAD
BIDDEFORD, YORK COUNTY, MAINE

NO	DATE	ISSUE/REVISION	APP
6	8/14/2024	REVISED PERMIT SET	DJB
5	6/27/2024	REVISED PERMIT SET	DJB
4	9/14/2023	DEP PERMIT SET	DJB
3	6/28/2023	75% DESIGN SUBMISSION	DJB
2	2/15/2023	305 DESIGN SUBMISSION	DJB
1	12/9/2022	15% DESIGN SUB REV	DJB
0	11/11/2022	15% DESIGN SUBMISSION	DJB

SHEET NAME: **EROSION CONTROL DETAILS II**

SHEET NO.: **C-014**

BANNON, DAN \\geiconsultants.com\data\Data_Storage\Working\UNIVERSITY OF NEW ENGLAND\2203703 UNE Marine Science Center Pier\00_CAD\Design\Sheets\2203703-C-DETAILS.dwg - 8/14/2024

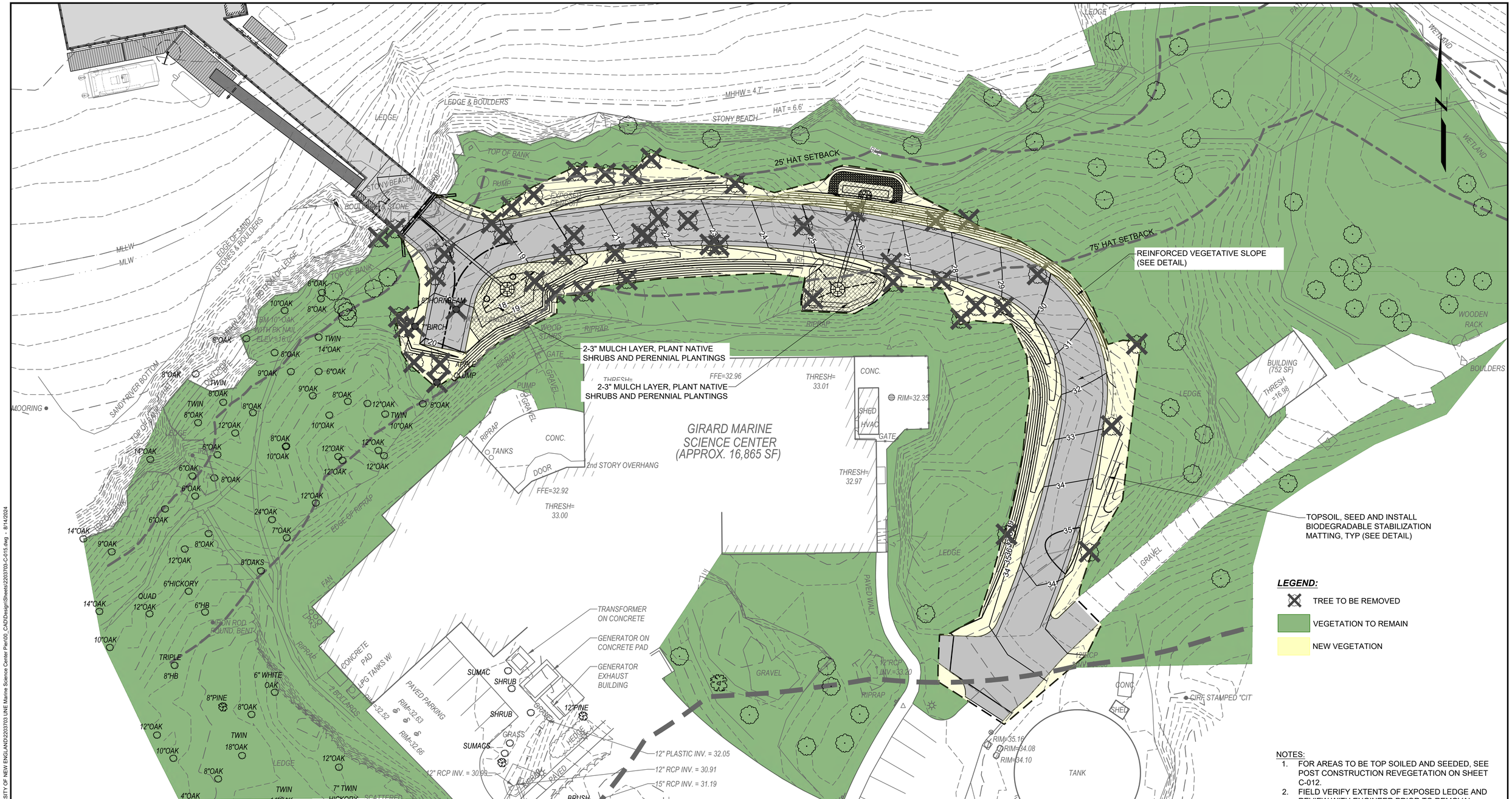

PLAN
SCALE: 1" = 20'

FOR PERMIT

0 20 40
SCALE, FEET

Attention:
0 1"
If this scale bar does not measure 1" then drawing is not original scale.

Designed:	DJB
Drawn:	JAM
Checked:	BJB
Approved:	BMM
P.E. No:	13033
GEI Project	2203703

GEI Consultants
GEI CONSULTANTS, INC.
5 MILK STREET
PORTLAND, ME 04101
(207)797-8901

UNIVERSITY OF NEW ENGLAND
11 HILLS BEACH RD.
BIDDEFORD, MAINE

UNIVERSITY OF NEW ENGLAND MARINE SCIENCE CENTER PIER
11 HILLS BEACH ROAD
BIDDEFORD, YORK COUNTY, MAINE

NO	DATE	ISSUE/REVISION	APP
6	8/14/2024	REVISED PERMIT SET	DJB
5	6/27/2024	REVISED PERMIT SET	DJB
4	9/14/2023	DEP PERMIT SET	DJB
3	6/28/2023	75% DESIGN SUBMISSION	DJB
2	2/15/2023	305 DESIGN SUBMISSION	DJB
1	12/9/2022	15% DESIGN SUB REV	DJB
0	11/11/2022	15% DESIGN SUBMISSION	DJB

SHEET NAME: **REVEGETATION PLAN**

SHEET NO.: **C-015**

BANNON, DAN \\geiconsultants.com\data\Data_Storage\Working\UNIVERSITY OF NEW ENGLAND\2203703 UNE Marine Science Center Pier\00_CAD\Design\Sheets\2203703-C-015.dwg - 8/14/2024

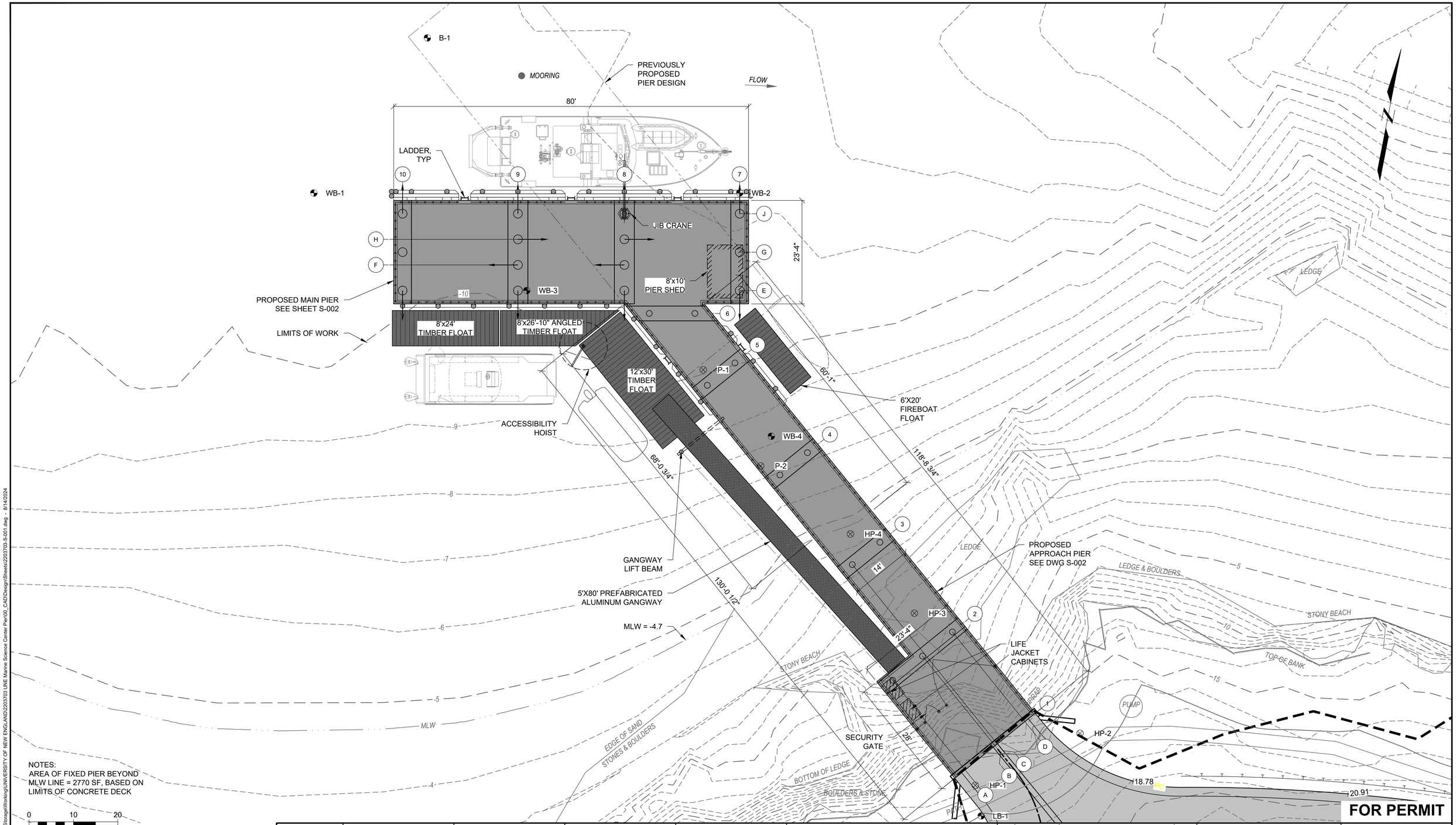

NOTES:
AREA OF FIXED PIER BEYOND MLW LINE = 2770 SF, BASED ON LIMITS OF CONCRETE DECK

0 10 20
SCALE, FEET

ELEVATION	MLLW	NAVD88*
BFE	+19.0	+14.0
HAT	+11.6	+6.6
MHHW	+9.7	+4.7
MHW	+9.3	+4.3
MSL	+4.8	-0.2
MLW	+0.3	-4.7
MLLW	0.0	-5.0

*PROJECT DATUM

Attention:
0 1"
If this scale bar does not measure 1" then drawing is not original scale.

DRAFT

Designed:	DJB
Drawn:	JAM
Checked:	BJB
Approved:	BMM
P.E. No:	13033
GEI Project	2203703

GEI Consultants
GEI CONSULTANTS, INC.
5 MILK STREET
PORTLAND, ME 04101
(207)797-8901

UNE
UNIVERSITY OF NEW ENGLAND
11 HILLS BEACH RD.
BIDDEFORD, MAINE

UNIVERSITY OF NEW ENGLAND MARINE SCIENCE CENTER PIER

11 HILLS BEACH ROAD
BIDDEFORD, YORK COUNTY, MAINE

NO	DATE	ISSUE/REVISION	APP
6	8/14/2024	REVISED PERMIT SET	DJB
5	6/27/2024	REVISED PERMIT SET	DJB
4	9/14/2023	DEP PERMIT SET	DJB
3	6/28/2023	75% DESIGN SUBMISSION	DJB
2	2/15/2023	305 DESIGN SUBMISSION	DJB
1	12/9/2022	15% DESIGN SUB REV	DJB
0	11/11/2022	15% DESIGN SUBMISSION	DJB

SHEET NAME
PIER LAYOUT PLAN

SHEET NO.
S-001

FOR PERMIT

BANNON, DAN \\geiconsultants.com\data\Data_Storage\Working\UNIVERSITY OF NEW ENGLAND\2203703 UNE Marine Science Center Pier\00_CAD\Design\Sheets\2203703-S-001.dwg - 8/14/2024

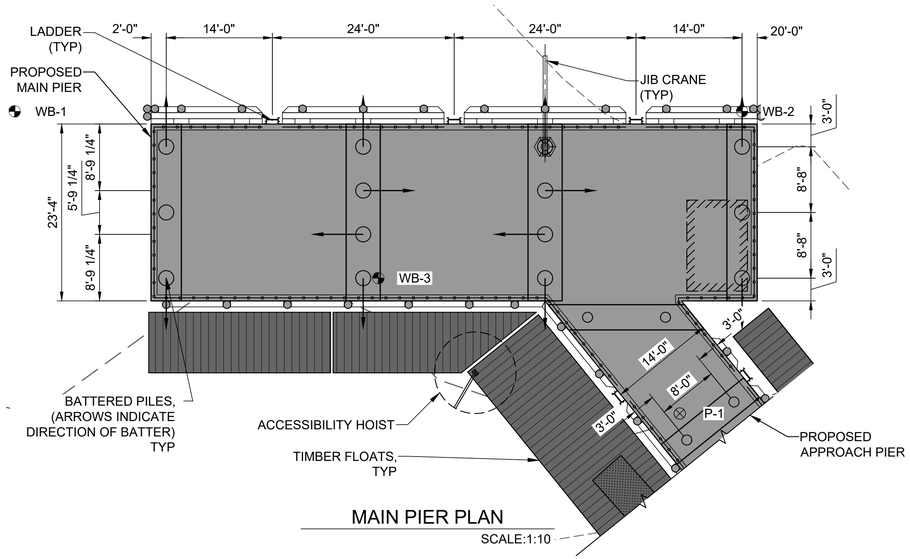

MAIN PIER PLAN

SCALE:1:10

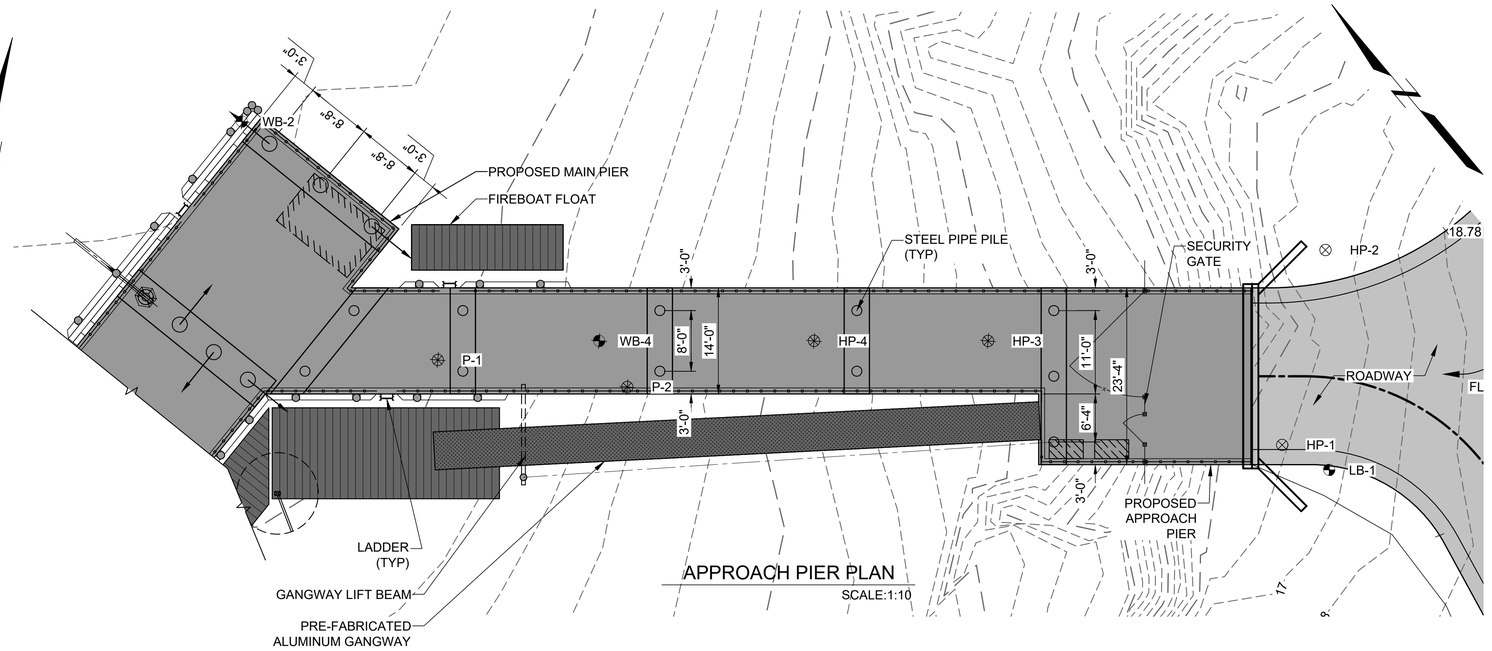

APPROACH PIER PLAN

SCALE:1:10

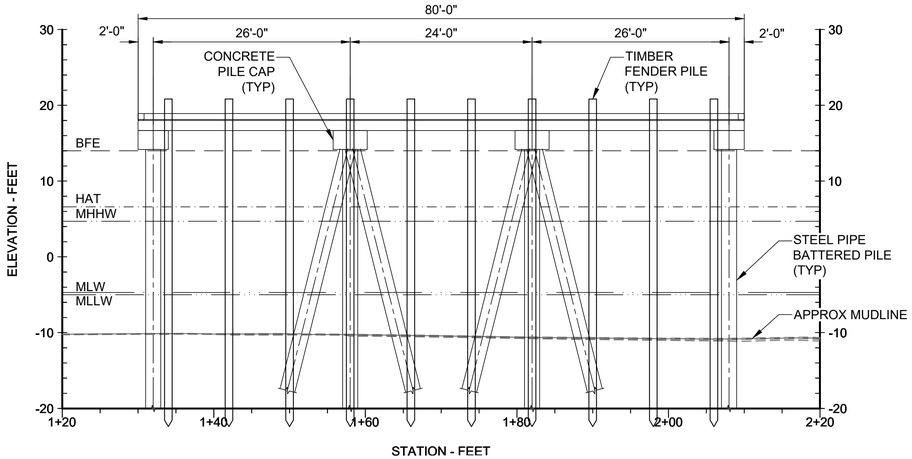

MAIN PIER ELEVATION

SCALE:1:10

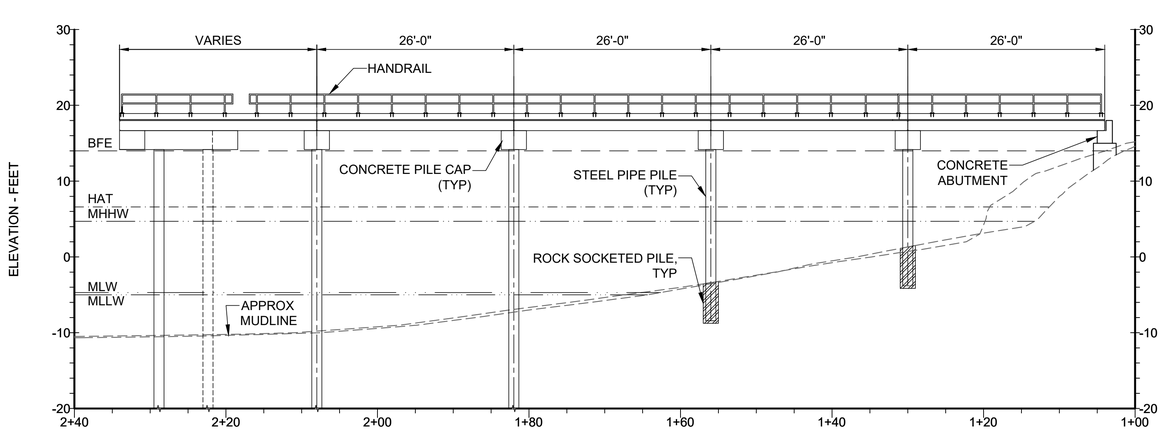

APPROACH PIER ELEVATION

SCALE:1:10

0 10 20

SCALE, FEET

ELEVATION	MLLW	NAVD88*
BFE	+19.0	+14.0
HAT	+11.6	+6.6
MHHW	+9.7	+4.7
MHW	+9.3	+4.3
MSL	+4.8	-0.2
MLW	+0.3	-4.7
MLLW	0.0	-5.0

*PROJECT DATUM

FOR PERMIT

Attention:

0 1"

If this scale bar does not measure 1" then drawing is not original scale.

DRAFT

Designed:	DJB
Drawn:	JAM
Checked:	BJB
Approved:	BMM
P.E. No:	13033
GEI Project	2203703

GEI Consultants
GEI CONSULTANTS, INC.
5 MILK STREET
PORTLAND, ME 04101
(207)797-8901

UNIVERSITY OF NEW ENGLAND

11 HILLS BEACH RD.
BIDDEFORD, MAINE

UNIVERSITY OF NEW ENGLAND MARINE SCIENCE CENTER PIER

11 HILLS BEACH ROAD
BIDDEFORD, YORK COUNTY, MAINE

NO	DATE	ISSUE/REVISION	APP
6	8/14/2024	REVISED PERMIT SET	DJB
5	6/27/2024	REVISED PERMIT SET	DJB
4	9/14/2023	DEP PERMIT SET	DJB
3	6/28/2023	75% DESIGN SUBMISSION	DJB
2	2/15/2023	305 DESIGN SUBMISSION	DJB
1	12/9/2022	15% DESIGN SUB REV	DJB
0	11/11/2022	15% DESIGN SUBMISSION	DJB

SHEET NAME

PIER PLANS AND ELEVATIONS

SHEET NO.

S-002

BANNON, DAN \\geiconsultants.com\data\Data_Storage\Working\UNIVERSITY OF NEW ENGLAND\2203703 UNE Marine Science Center Pier\00_CAD\Design\Sheets\2203703-S-002.dwg - 8/14/2024

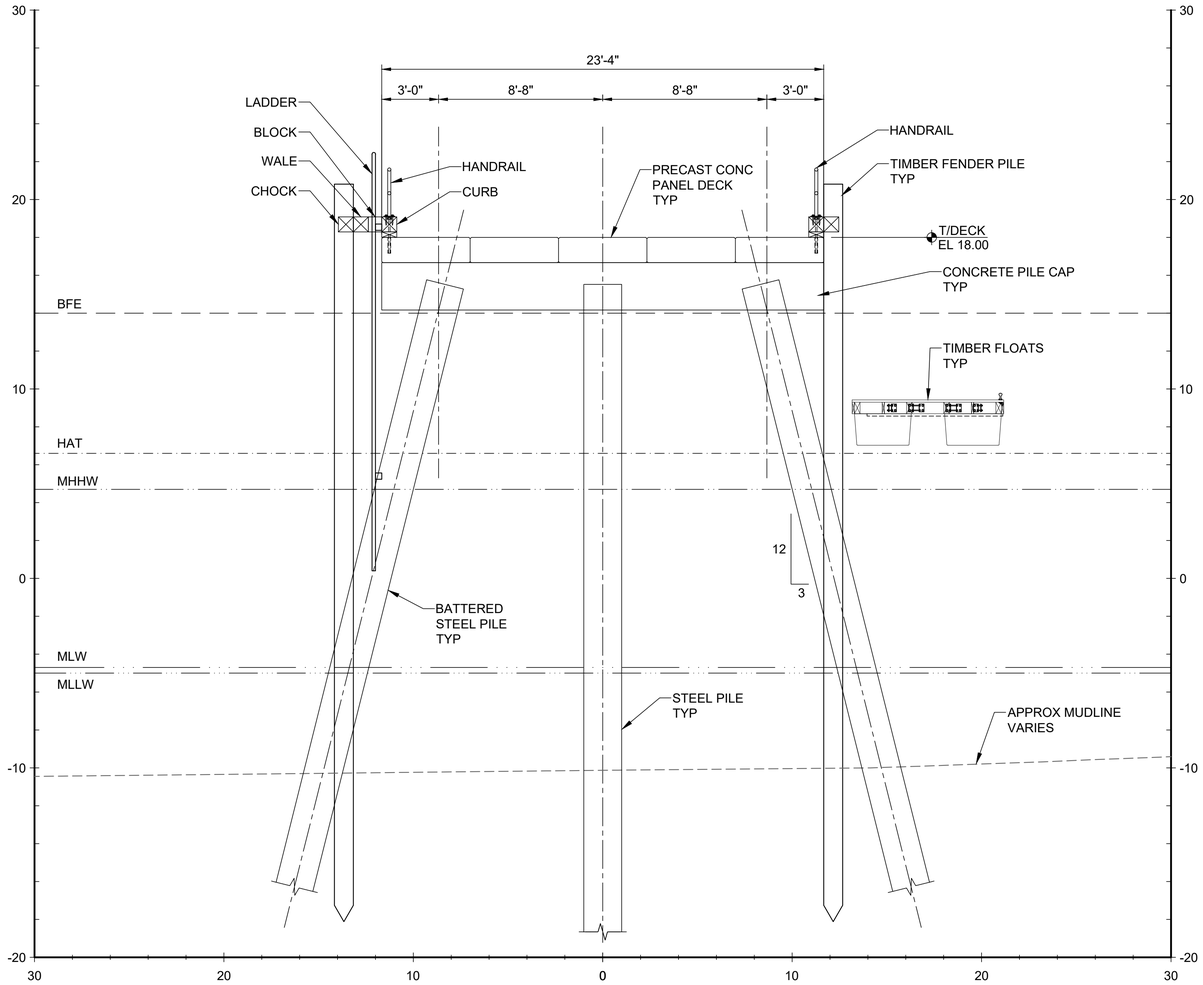

SECTION
MAIN PIER AT BENT 10 SCALE: 1"=4'

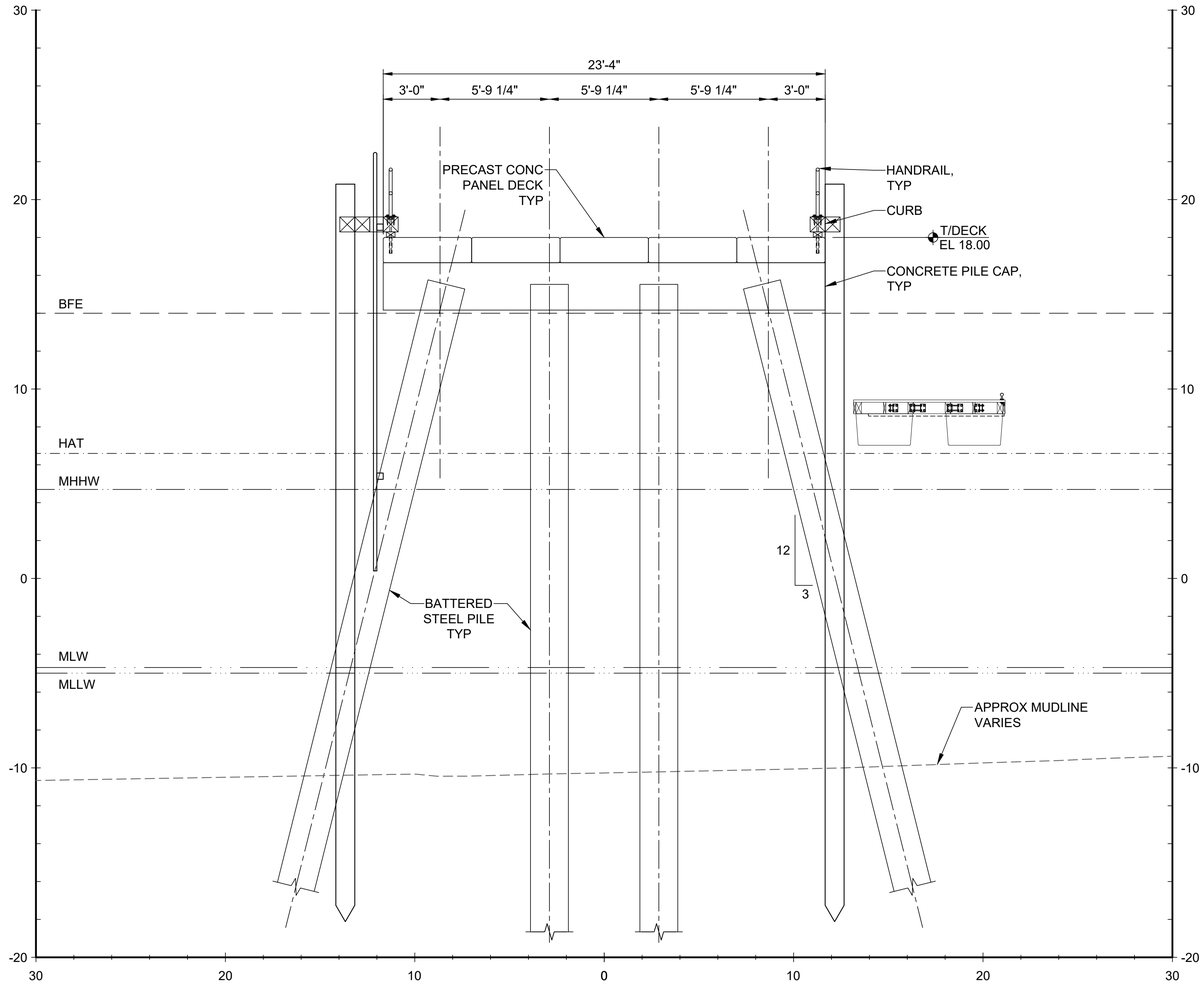

SECTION
MAIN PIER AT BENT 9 SCALE: 1"=4'

0 2 4 8
SCALE, FEET

ELEVATION	MLLW	NAVD88*
BFE	+19.0	+14.0
HAT	+11.6	+6.6
MHHW	+9.7	+4.7
MHW	+9.3	+4.3
MSL	+4.8	-0.2
MLW	+0.3	-4.7
MLLW	0.0	-5.0

*PROJECT DATUM

FOR PERMIT

Attention:
0 1"
If this scale bar does not measure 1" then drawing is not original scale.

DRAFT

Designed:	DJB
Drawn:	JAM
Checked:	BJB
Approved:	BMM
P.E. No:	13033
GEI Project	2203703

GEI Consultants
GEI CONSULTANTS, INC.
5 MILK STREET
PORTLAND, ME 04101
(207)797-8901

UNIVERSITY OF NEW ENGLAND
11 HILLS BEACH RD.
BIDDEFORD, MAINE

UNIVERSITY OF NEW ENGLAND MARINE SCIENCE CENTER PIER
11 HILLS BEACH ROAD
BIDDEFORD, YORK COUNTY, MAINE

NO	DATE	ISSUE/REVISION	APP
6	8/14/2024	REVISED PERMIT SET	DJB
5	6/27/2024	REVISED PERMIT SET	DJB
4	9/14/2023	DEP PERMIT SET	DJB
3	6/28/2023	75% DESIGN SUBMISSION	DJB
2	2/15/2023	305 DESIGN SUBMISSION	DJB
1	12/9/2022	15% DESIGN SUB REV	DJB
0	11/11/2022	15% DESIGN SUBMISSION	DJB

SHEET NAME
TYPICAL PIER SECTIONS (1 OF 2)

SHEET NO.
S-003

BANNON_DAN \\geiconsultants.com\data\Data_Storage\Working\UNIVERSITY OF NEW ENGLAND\2203703 UNE Marine Science Center Pier\00_CAD\Design\Sheets\2203703-S-003.dwg - 8/14/2024

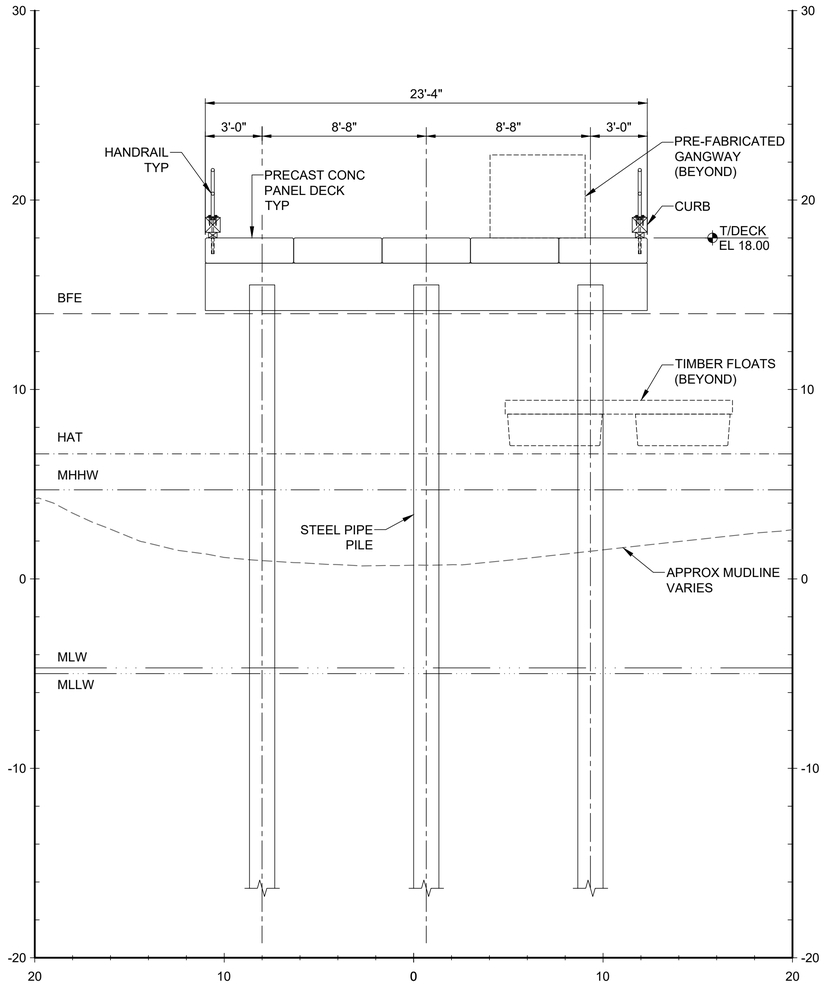

SECTION
28' WIDE APPROACH PIER AT BENT 2 SCALE: 1"=4'

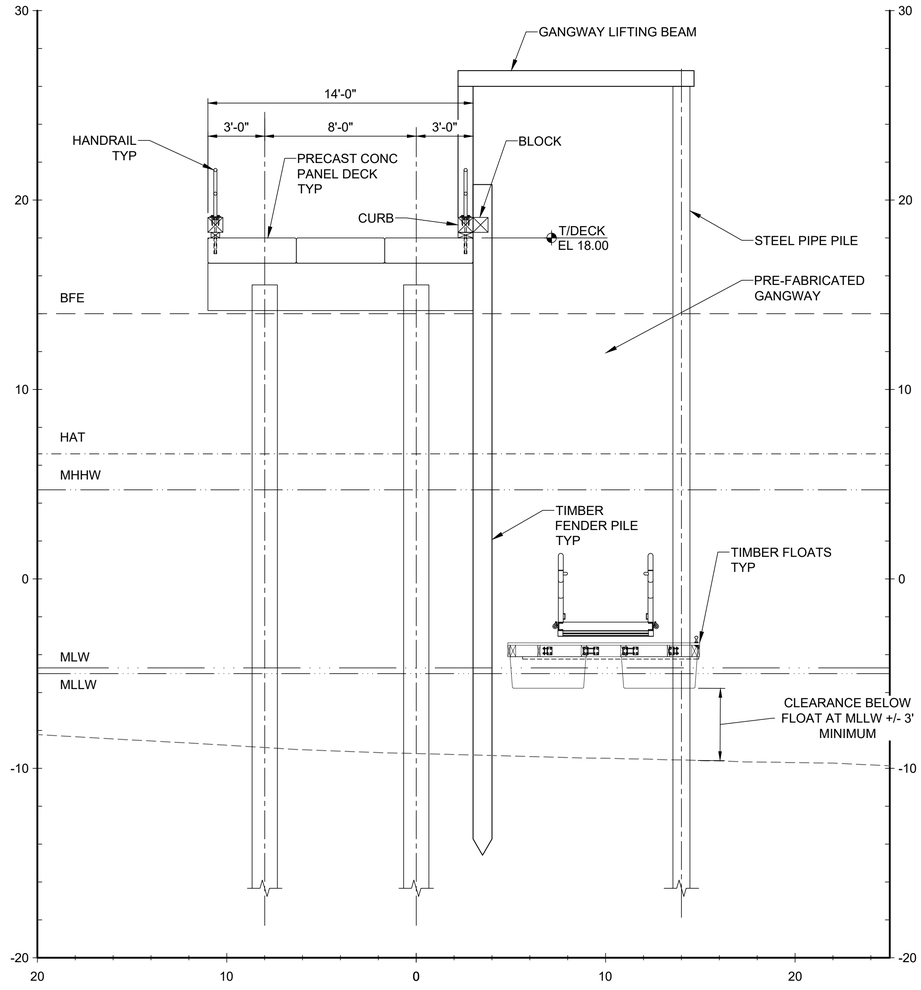

SECTION
14' WIDE APPROACH PIER AT GANGWAY HOIST SCALE: 1"=4'

0 2 4 8
SCALE, FEET

ELEVATION	MLLW	NAVD88*
BFE	+19.0	+14.0
HAT	+11.6	+6.6
MHHW	+9.7	+4.7
MHW	+9.3	+4.3
MSL	+4.8	-0.2
MLW	+0.3	-4.7
MLLW	0.0	-5.0

*PROJECT DATUM

FOR PERMIT

Attention:
0 1"
If this scale bar does not measure 1" then drawing is not original scale.

DRAFT

Designed:	DJB
Drawn:	JAM
Checked:	BJB
Approved:	BMM
P.E. No:	13033
GEI Project	2203703

GEI Consultants
GEI CONSULTANTS, INC.
5 MILK STREET
PORTLAND, ME 04101
(207)797-8901

UNE
UNIVERSITY OF NEW ENGLAND
11 HILLS BEACH RD.
BIDDEFORD, MAINE

UNIVERSITY OF NEW ENGLAND MARINE SCIENCE CENTER PIER
11 HILLS BEACH ROAD
BIDDEFORD, YORK COUNTY, MAINE

NO	DATE	ISSUE/REVISION	APP
6	8/14/2024	REVISED PERMIT SET	DJB
5	6/27/2024	REVISED PERMIT SET	DJB
4	9/14/2023	DEP PERMIT SET	DJB
3	6/28/2023	75% DESIGN SUBMISSION	DJB
2	2/15/2023	305 DESIGN SUBMISSION	DJB
1	12/9/2022	15% DESIGN SUB REV	DJB
0	11/11/2022	15% DESIGN SUBMISSION	DJB

SHEET NAME
TYPICAL PIER SECTIONS (2 OF 2)

SHEET NO.
S-004

BANNON, DAN \\geiconsultants.com\data\Data_Storage\Working\UNIVERSITY OF NEW ENGLAND\2203703 UNE Marine Science Center Pier\00_CAD\Design\Sheets\2203703-S-004.dwg - 8/14/2024

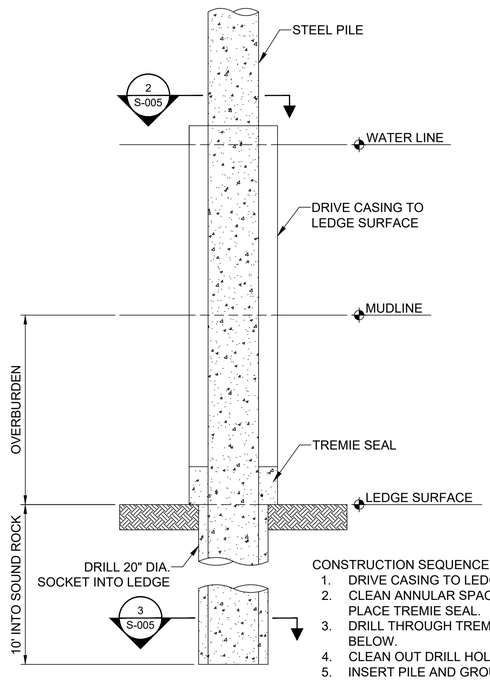

CONSTRUCTION SEQUENCE

1. DRIVE CASING TO LEDGE SURFACE.
2. CLEAN ANNULAR SPACE TO LEDGE SURFACE, PLACE TREMIE SEAL.
3. DRILL THROUGH TREMIE INTO SOUND ROCK BELOW.
4. CLEAN OUT DRILL HOLE.
5. INSERT PILE AND GROUT TO SURFACE.
6. REMOVE CASING.
7. FILL STEEL PIPE PILE TO TOP WITH CONCRETE.

1 DETAIL
PILE SOCKET SCALE: 1" = 2'

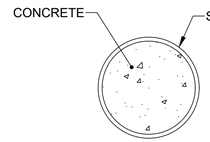

2 SECTION
CONCRETE FILLED
STEEL PIPE PILE SCALE: 1" = 1'

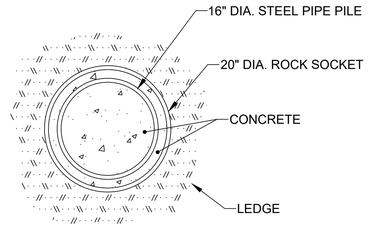

3 SECTION
ROCK SOCKET SCALE: 1" = 1'

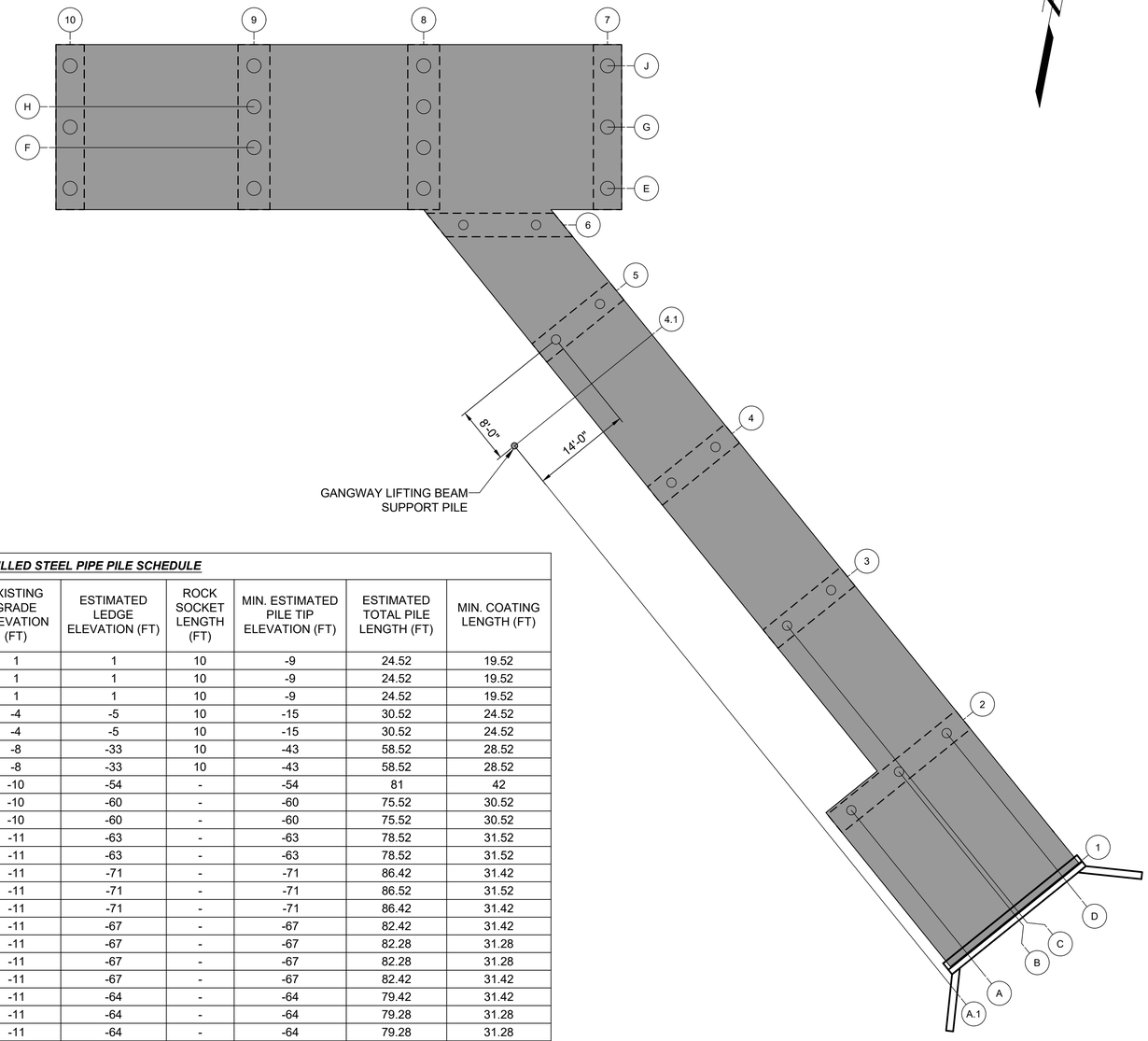

DETAIL
MAIN PIER SCALE: 1" = 10"

CONCRETE FILLED STEEL PIPE PILE SCHEDULE

PILE DESIGNATION	PILE SIZE (INCHES)	BATTER	CUTOFF ELEVATION (FT)	EXISTING GRADE ELEVATION (FT)	ESTIMATED LEDGE ELEVATION (FT)	ROCK SOCKET LENGTH (FT)	MIN. ESTIMATED PILE TIP ELEVATION (FT)	ESTIMATED TOTAL PILE LENGTH (FT)	MIN. COATING LENGTH (FT)
2A	16x5/8	VERTICAL	15.52	1	1	10	-9	24.52	19.52
2B	16x5/8	VERTICAL	15.52	1	1	10	-9	24.52	19.52
2D	16x5/8	VERTICAL	15.52	1	1	10	-9	24.52	19.52
3C	16x5/8	VERTICAL	15.52	-4	-5	10	-15	30.52	24.52
3D	16x5/8	VERTICAL	15.52	-4	-5	10	-15	30.52	24.52
4C	16x5/8	VERTICAL	15.52	-8	-33	10	-43	58.52	28.52
4D	16x5/8	VERTICAL	15.52	-8	-33	10	-43	58.52	28.52
4.1-A.1	10.75x5/8	VERTICAL	27	-10	-54	-	-54	81	42
5C	16x5/8	VERTICAL	15.52	-10	-60	-	-60	75.52	30.52
5D	16x5/8	VERTICAL	15.52	-10	-60	-	-60	75.52	30.52
6C	16x5/8	VERTICAL	15.52	-11	-63	-	-63	78.52	31.52
6D	16x5/8	VERTICAL	15.52	-11	-63	-	-63	78.52	31.52
7E	24x5/8	3:12	15.42	-11	-71	-	-71	86.42	31.42
7G	24x5/8	VERTICAL	15.52	-11	-71	-	-71	86.52	31.52
7J	24x5/8	3:12	15.42	-11	-71	-	-71	86.42	31.42
8E	24x5/8	3:12	15.42	-11	-67	-	-67	82.42	31.42
8F	24x5/8	3:12	15.28	-11	-67	-	-67	82.28	31.28
8H	24x5/8	3:12	15.28	-11	-67	-	-67	82.28	31.28
8J	24x5/8	3:12	15.42	-11	-67	-	-67	82.42	31.42
9E	24x5/8	3:12	15.42	-11	-64	-	-64	79.42	31.42
9F	24x5/8	3:12	15.28	-11	-64	-	-64	79.28	31.28
9H	24x5/8	3:12	15.28	-11	-64	-	-64	79.28	31.28
9J	24x5/8	3:12	15.42	-11	-64	-	-64	79.42	31.42
10E	24x5/8	3:12	15.42	-11	-66	-	-66	81.42	31.42
10G	24x5/8	VERTICAL	15.52	-11	-66	-	-66	81.52	31.52
10J	24x5/8	3:12	15.42	-11	-66	-	-66	81.42	31.42
							TOTAL	1821.5	

SCHEDULE NOTES

1. ALL ELEVATIONS REFERENCED IN TABLE ARE IN NAVD88 DATUM.

0 10 20
SCALE, FEET

0 1 2 4
SCALE, FEET

ELEVATION	MLLW	NAVD88*
BFE	+19.0	+14.0
HAT	+11.6	+6.6
MHHW	+9.7	+4.7
MHW	+9.3	+4.3
MSL	+4.8	-0.2
MLW	+0.3	-4.7
MLLW	0.0	-5.0

*PROJECT DATUM

FOR PERMIT

Attention:
0 1"
If this scale bar does not measure 1" then drawing is not original scale.

DRAFT

Designed:	DJB
Drawn:	JAM
Checked:	BJB
Approved:	BMM
P.E. No:	13033
GEI Project	2203703

GEI Consultants
GEI CONSULTANTS, INC.
5 MILK STREET
PORTLAND, ME 04101
(207)797-8901

UNE
UNIVERSITY OF
NEW ENGLAND
11 HILLS BEACH RD.
BIDDEFORD, MAINE

UNIVERSITY OF NEW ENGLAND MARINE SCIENCE CENTER PIER
11 HILLS BEACH ROAD
BIDDEFORD, YORK COUNTY, MAINE

NO	DATE	ISSUE/REVISION	APP
6	8/14/2024	REVISED PERMIT SET	DJB
5	6/27/2024	REVISED PERMIT SET	DJB
4	9/14/2023	DEP PERMIT SET	DJB
3	6/28/2023	75% DESIGN SUBMISSION	DJB
2	2/15/2023	305 DESIGN SUBMISSION	DJB
1	12/9/2022	15% DESIGN SUB REV	DJB
0	11/11/2022	15% DESIGN SUBMISSION	DJB

SHEET NAME: **PILE PLAN**

SHEET NO.: **S-005**

BANNON, DAN \\gisconsultants.com\data\Data_Storage\Working\UNIVERSITY OF NEW ENGLAND\2203703 UNE Marine Science Center Pier\00_CAD\Design\Sheets\2203703-S-005.dwg - 8/14/2024

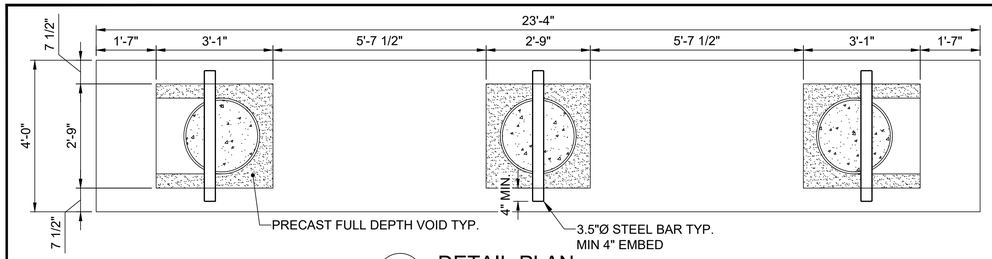

1 DETAIL-PLAN
MAIN PIER
BENT 7 & 10
SCALE: 1" = 2'

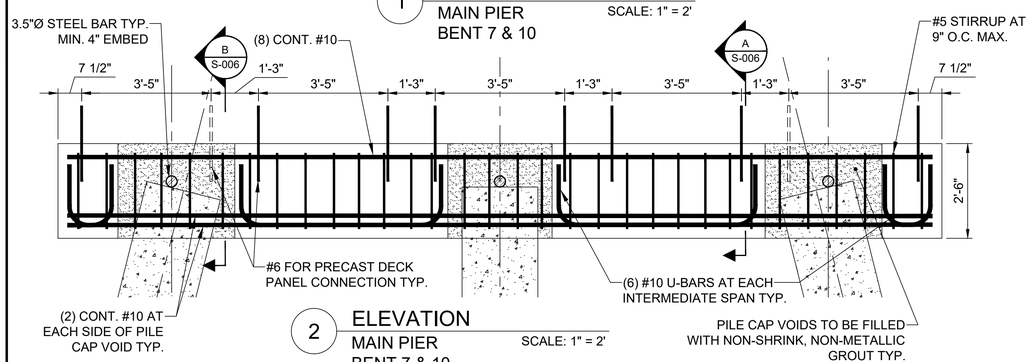

2 ELEVATION
MAIN PIER
BENT 7 & 10
SCALE: 1" = 2'

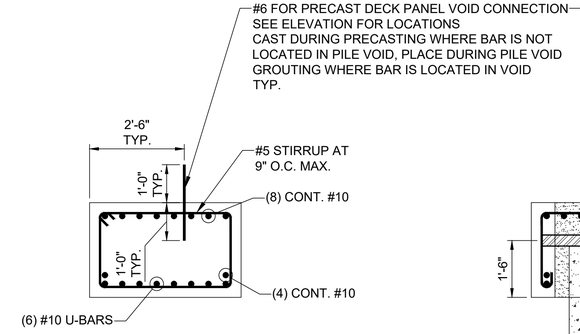

A SECTION
MAIN PIER
BENT 7 & 10
SCALE: 1" = 2'

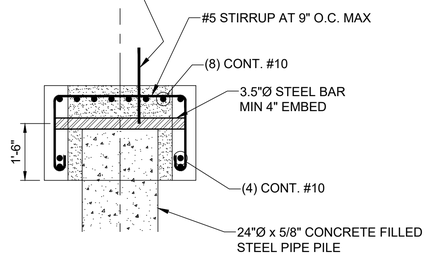

B SECTION
MAIN PIER
BENT 7 & 10
SCALE: 1" = 2'

5 DETAIL
MAIN PIER
N.T.S.

3 DETAIL-PLAN
MAIN PIER
BENT 8 & 9
SCALE: 1" = 2'

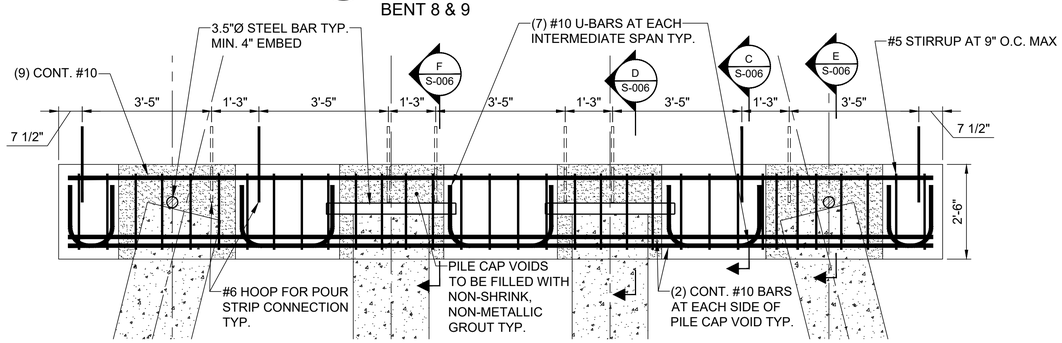

4 ELEVATION
MAIN PIER
BENT 8 & 9
SCALE: 1" = 2'

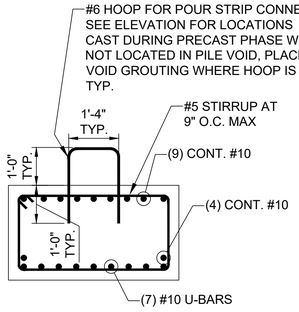

C SECTION
MAIN PIER
BENT 8 & 9
SCALE: 1" = 2'

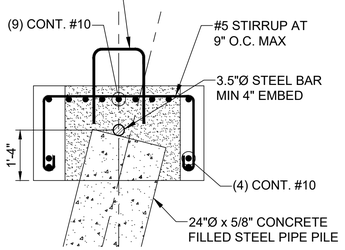

D SECTION
MAIN PIER
BENT 8 & 9
SCALE: 1" = 2'

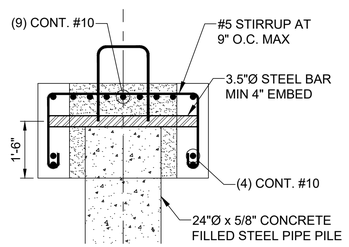

E SECTION
MAIN PIER
BENT 8 & 9
SCALE: 1" = 2'

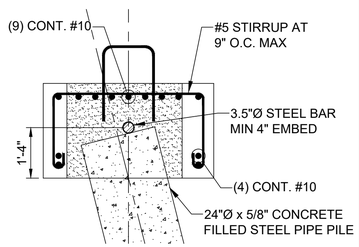

F SECTION
MAIN PIER
BENT 8 & 9
SCALE: 1" = 2'

FOR PERMIT

0 1 2 4
SCALE, FEET

ELEVATION	MLLW	NAVD88*
BFE	+19.0	+14.0
HAT	+11.6	+6.6
MHHW	+9.7	+4.7
MHW	+9.3	+4.3
MSL	+4.8	-0.2
MLW	+0.3	-4.7
MLLW	0.0	-5.0

*PROJECT DATUM

Attention:
0 1"
If this scale bar does not measure 1" then drawing is not original scale.

DRAFT

Designed:	DJB
Drawn:	JAM
Checked:	BJB
Approved:	BMM
P.E. No:	13033
GEI Project	2203703

GEI Consultants
GEI CONSULTANTS, INC.
5 MILK STREET
PORTLAND, ME 04101
(207)797-8901

UNE
UNIVERSITY OF NEW ENGLAND
11 HILLS BEACH RD.
BIDDEFORD, MAINE

UNIVERSITY OF NEW ENGLAND MARINE SCIENCE CENTER PIER

11 HILLS BEACH ROAD
BIDDEFORD, YORK COUNTY, MAINE

NO	DATE	ISSUE/REVISION	APP
6	8/14/2024	REVISED PERMIT SET	DJB
5	6/27/2024	REVISED PERMIT SET	DJB
4	9/14/2023	DEP PERMIT SET	DJB
3	6/28/2023	75% DESIGN SUBMISSION	DJB
2	2/15/2023	305 DESIGN SUBMISSION	DJB
1	12/9/2022	15% DESIGN SUB REV	DJB
0	11/11/2022	15% DESIGN SUBMISSION	DJB

SHEET NAME
PRECAST PILE CAP PLAN AND SECTIONS 1 OF 2

SHEET NO.
S-006

BANNON, DAN \\geiconsultants.com\data\Data_Storage\Working\UNIVERSITY OF NEW ENGLAND\2203703 UNE Marine Science Center Pier\00_CAD\Design\Sheets\2203703-S-006.dwg - 8/14/2024

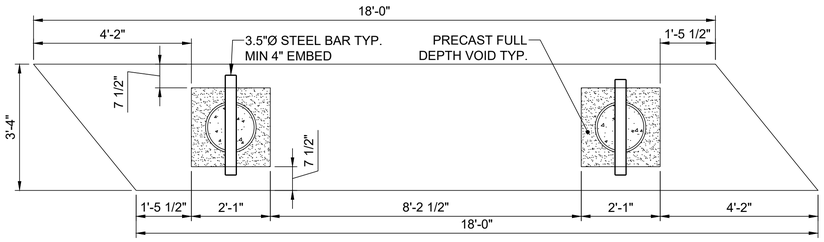

1 DETAIL-PLAN
APPROACH PIER BENT 6 — SCALE: 1" = 2'

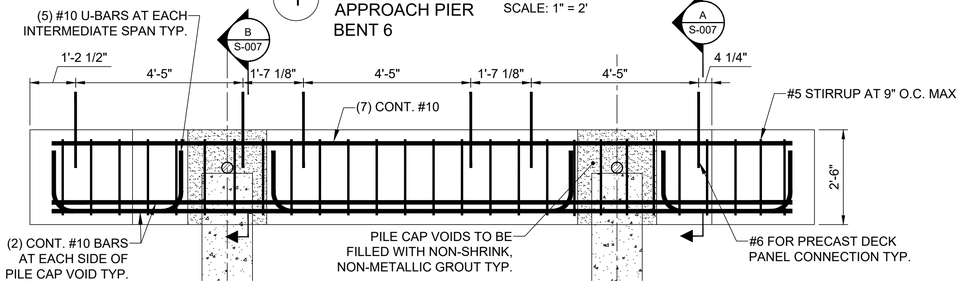

2 ELEVATION
APPROACH PIER BENT 6 — SCALE: 1" = 2'

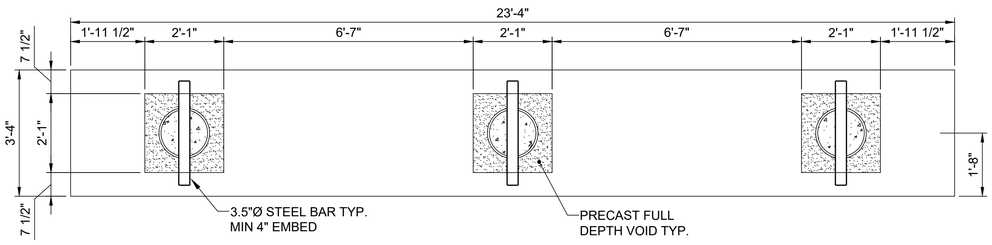

3 DETAIL-PLAN
APPROACH PIER BENT 2 — SCALE: 1" = 2'

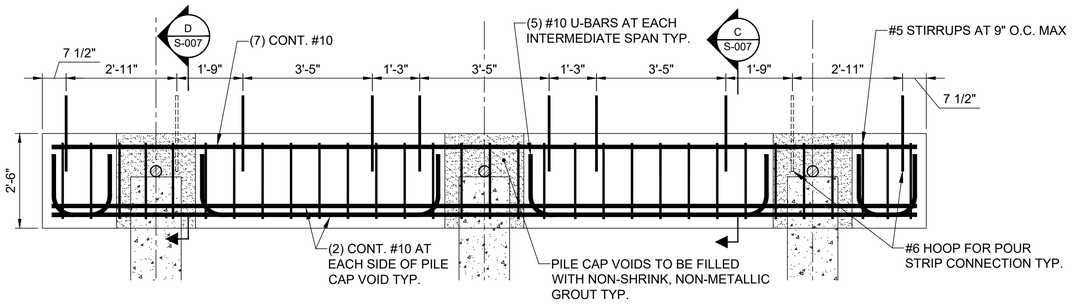

4 ELEVATION
APPROACH PIER BENT 2 — SCALE: 1" = 2'

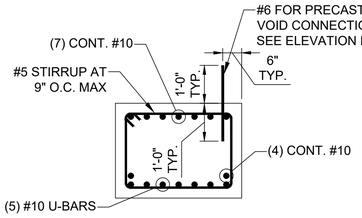

A SECTION
APPROACH PIER BENT 6 — SCALE: 1" = 2'

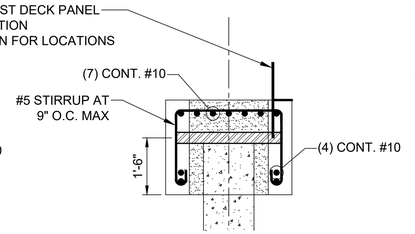

B SECTION
APPROACH PIER BENT 6 — SCALE: 1" = 2'

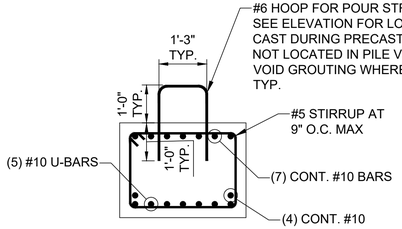

C SECTION
APPROACH PIER BENTS 2-5 — SCALE: 1" = 2'

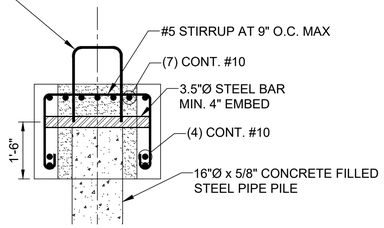

D SECTION
APPROACH PIER BENTS 2-5 — SCALE: 1" = 2'

7 DETAIL
MAIN PIER — N.T.S.

5 DETAIL-PLAN
APPROACH PIER BENTS 3-5 — SCALE: 1" = 2'

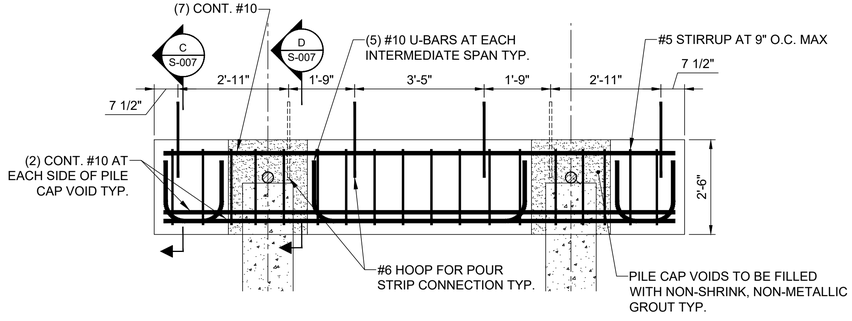

6 ELEVATION
APPROACH PIER BENTS 3-5 — SCALE: 1" = 2'

FOR PERMIT

0 1 2 4
SCALE, FEET

ELEVATION	MLLW	NAVD88*
BFE	+19.0	+14.0
HAT	+11.6	+6.6
MHHW	+9.7	+4.7
MHW	+9.3	+4.3
MSL	+4.8	-0.2
MLW	+0.3	-4.7
MLLW	0.0	-5.0

*PROJECT DATUM

Attention:
0 1"
If this scale bar does not measure 1" then drawing is not original scale.

DRAFT

Designed:	DJB
Drawn:	JAM
Checked:	BJB
Approved:	BMM
P.E. No:	13033
GEI Project	2203703

GEI Consultants
GEI CONSULTANTS, INC.
5 MILK STREET
PORTLAND, ME 04101
(207)797-8901

UNE
UNIVERSITY OF NEW ENGLAND
11 HILLS BEACH RD.
BIDDEFORD, MAINE

UNIVERSITY OF NEW ENGLAND MARINE SCIENCE CENTER PIER
11 HILLS BEACH ROAD
BIDDEFORD, YORK COUNTY, MAINE

NO	DATE	ISSUE/REVISION	APP
6	8/14/2024	REVISED PERMIT SET	DJB
5	6/27/2024	REVISED PERMIT SET	DJB
4	9/14/2023	DEP PERMIT SET	DJB
3	6/28/2023	75% DESIGN SUBMISSION	DJB
2	2/15/2023	305 DESIGN SUBMISSION	DJB
1	12/9/2022	15% DESIGN SUB REV	DJB
0	11/11/2022	15% DESIGN SUBMISSION	DJB

SHEET NAME: **PRECAST PILE CAP PLAN AND SECTIONS 2 OF 2**

SHEET NO.: **S-007**

BANNON_DAN \\bos1v-fs02\Data_Storage\Working\UNIVERSITY OF NEW ENGLAND\2203703 UNE Marine Science Center Pier\00_CAD\Design\Sheets\2203703-S-007.dwg - 8/14/2024

PRECAST DECK PANEL SCHEDULE					
PANEL ID	A	B	C	D	QTY.
A	4'-8"	25'-2"	-	-	5
B	4'-8"	24'-3"	-	-	9
C	4'-8"	-	13'-3"	17'-0"	1
D	4'-8"	-	17'-0"	20'-9 1/2"	1
E	4'-8"	-	20'-9 1/2"	24'-7"	1
F	4'-8"	26'-0"	-	-	10
G	4'-8"	22'-0"	-	-	5

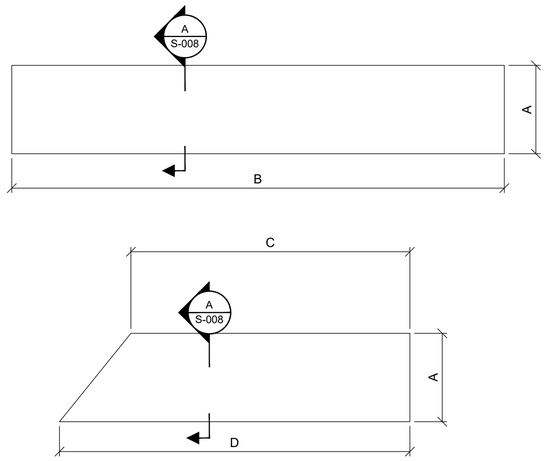

1 DETAIL-PLAN
PRECAST DECK PANEL SCALE: 1"=4'

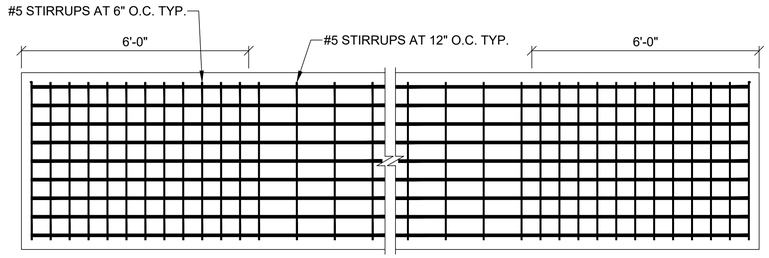

3 DETAIL-PLAN PLANKS A, B, F, & G
PRECAST DECK PANEL
STIRRUP SPACING SCALE: 1"=2'

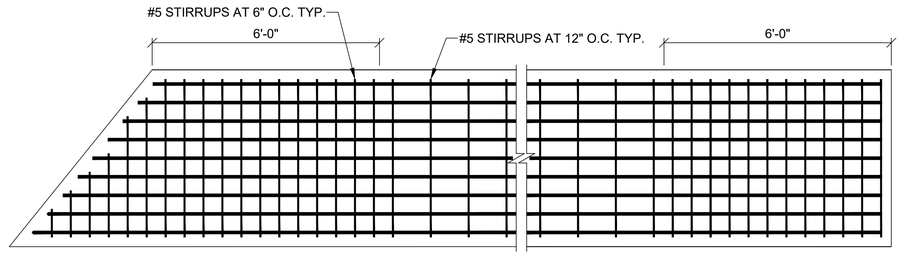

4 DETAIL-PLAN PLANKS C, D, & E
PRECAST DECK PANEL
STIRRUP SPACING SCALE: 1"=2'

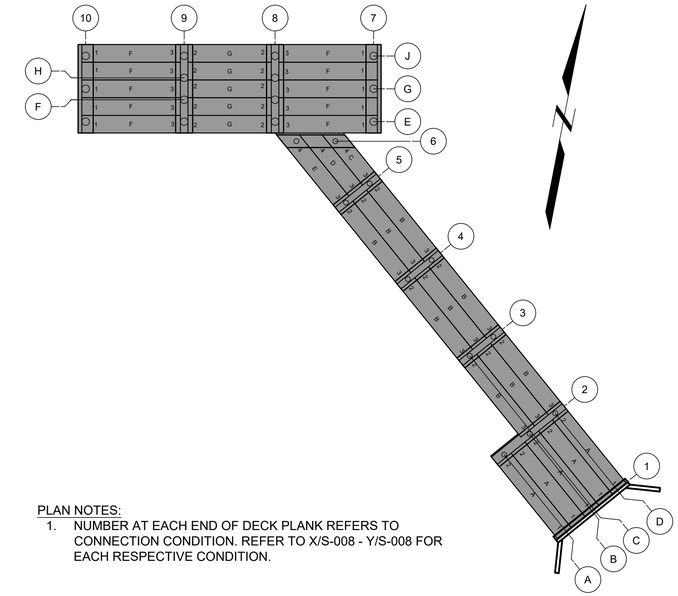

PLAN NOTES:
1. NUMBER AT EACH END OF DECK PLANK REFERS TO CONNECTION CONDITION. REFER TO X/S-008 - Y/S-008 FOR EACH RESPECTIVE CONDITION.

9 DETAIL
PIER DECK PANELS N.T.S.

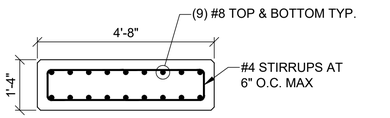

A SECTION
PRECAST DECK PANEL SCALE: 1"=2'

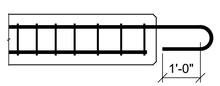

B SECTION
PRECAST DECK PANEL
CONNECTION END 2 & 3 SCALE: 1"=2'

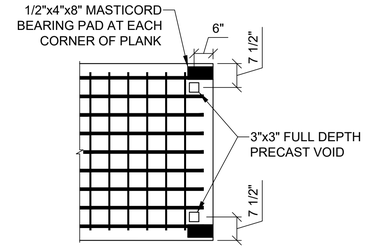

5 DETAIL - PLAN
DECK PANEL
CONNECTION 1 SCALE: 1"=2'

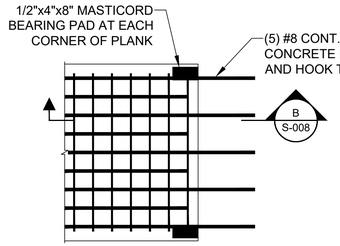

6 DETAIL - PLAN
DECK PANEL
CONNECTION 2 SCALE: 1"=2'

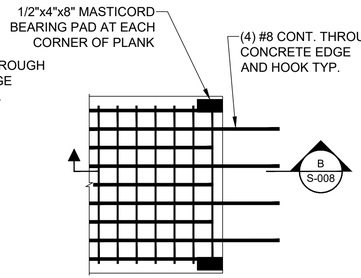

7 DETAIL - PLAN
DECK PANEL
CONNECTION 3 SCALE: 1"=2'

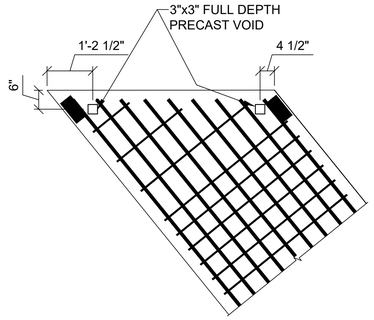

8 DETAIL - PLAN
DECK PANEL
CONNECTION 1 SCALE: 1"=2'

0 10 20
SCALE, FEET

0 1 2 4
SCALE, FEET

ELEVATION	MLLW	NAVD88*
BFE	+19.0	+14.0
HAT	+11.6	+6.6
MHHW	+9.7	+4.7
MHW	+9.3	+4.3
MSL	+4.8	-0.2
MLW	+0.3	-4.7
MLLW	0.0	-5.0

*PROJECT DATUM

FOR PERMIT

Attention:
0 1"
If this scale bar does not measure 1" then drawing is not original scale.

DRAFT

Designed:	DJB
Drawn:	JAM
Checked:	BJB
Approved:	BMM
P.E. No:	13033
GEI Project	2203703

GEI Consultants
GEI CONSULTANTS, INC.
5 MILK STREET
PORTLAND, ME 04101
(207)797-8901

UNE
UNIVERSITY OF NEW ENGLAND
11 HILLS BEACH RD.
BIDDEFORD, MAINE

UNIVERSITY OF NEW ENGLAND MARINE SCIENCE CENTER PIER
11 HILLS BEACH ROAD
BIDDEFORD, YORK COUNTY, MAINE

NO	DATE	ISSUE/REVISION	APP
6	8/14/2024	REVISED PERMIT SET	DJB
5	6/27/2024	REVISED PERMIT SET	DJB
4	9/14/2023	DEP PERMIT SET	DJB
3	6/28/2023	75% DESIGN SUBMISSION	DJB
2	2/15/2023	305 DESIGN SUBMISSION	DJB
1	12/9/2022	15% DESIGN SUB REV	DJB
0	11/11/2022	15% DESIGN SUBMISSION	DJB

SHEET NAME
PRECAST DECK PANEL PLAN

SHEET NO.
S-008

BANNON, DAN \\oos1v-fs02\Data_Storage\Working\UNIVERSITY OF NEW ENGLAND\2203703 UNE Marine Science Center Pier\00_CAD\Design\Sheets\2203703-S-008.dwg - 8/14/2024

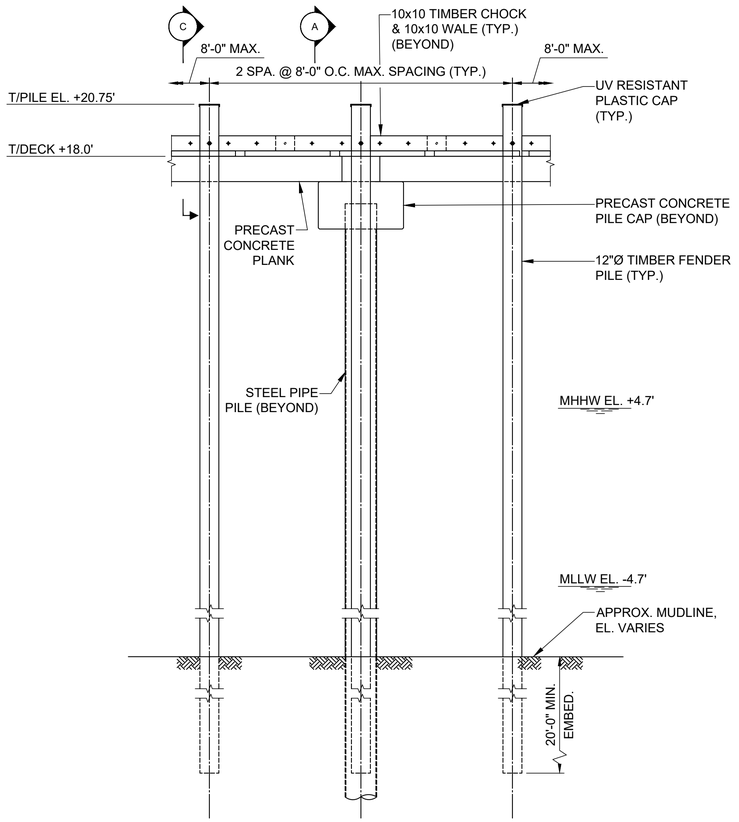

TIMBER FENDER DETAIL

SCALE: 1/4" = 1'-0"

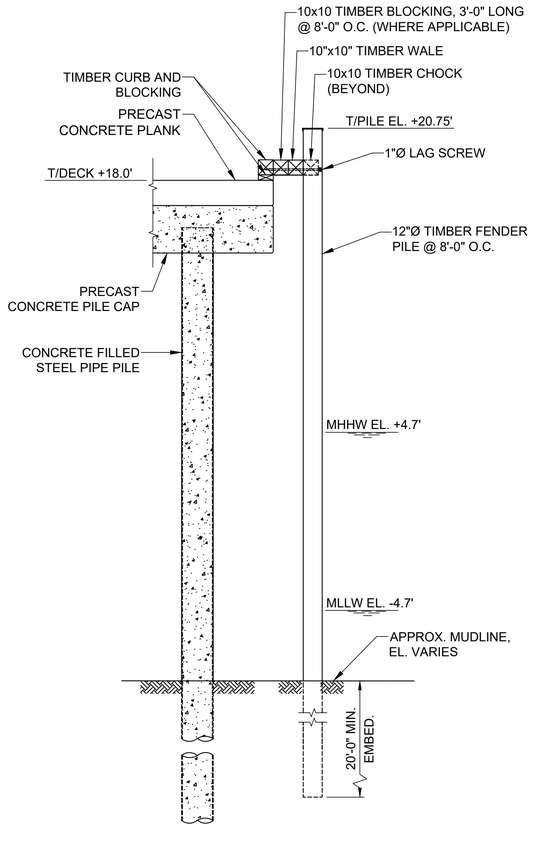

A TIMBER FENDER SECTION

SCALE: 1/4" = 1'-0"

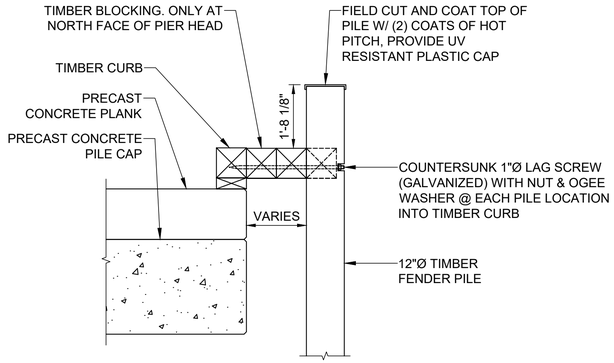

C FENDER PILE CONNECTION

SCALE: 1/2" = 1'-0"

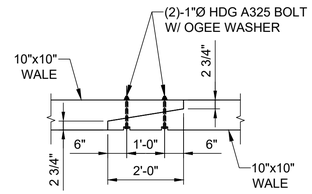

D WALE SPLICE DETAIL

SCALE: 1/2" = 1'-0"

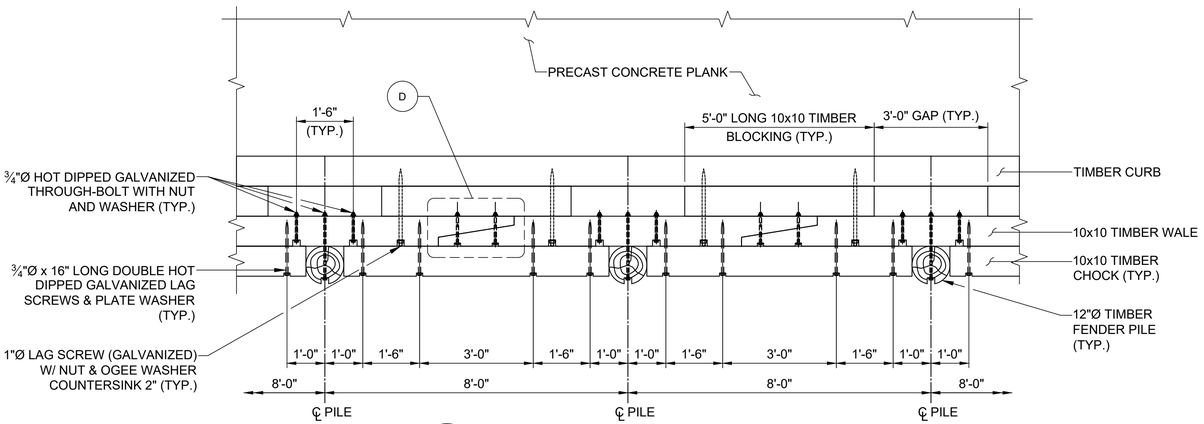

B TIMBER FENDER PARTIAL PLAN

SCALE: 1/2" = 1'-0"

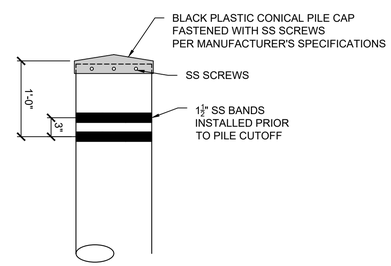

E PILE BANDING DETAIL

SCALE: 1" = 1'-0"

ELEVATION	MLLW	NAVD88*
BFE	+19.0	+14.0
HAT	+11.6	+6.6
MHHW	+9.7	+4.7
MHW	+9.3	+4.3
MSL	+4.8	-0.2
MLW	+0.3	-4.7
MLLW	0.0	-5.0

*PROJECT DATUM

FOR PERMIT

Attention:

0 1"

If this scale bar does not measure 1" then drawing is not original scale.

DRAFT

Designed:	DJB
Drawn:	JAM
Checked:	BJB
Approved:	BMM
P.E. No:	13033
GEI Project	2203703

GEI Consultants
GEI CONSULTANTS, INC.
5 MILK STREET
PORTLAND, ME 04101
(207)797-8901

UNIVERSITY OF NEW ENGLAND

11 HILLS BEACH RD.
BIDDEFORD, MAINE

UNIVERSITY OF NEW ENGLAND MARINE SCIENCE CENTER PIER

11 HILLS BEACH ROAD
BIDDEFORD, YORK COUNTY, MAINE

NO	DATE	ISSUE/REVISION	APP
6	8/14/2024	REVISED PERMIT SET	DJB
5	6/27/2024	REVISED PERMIT SET	DJB
4	9/14/2023	DEP PERMIT SET	DJB
3	6/28/2023	75% DESIGN SUBMISSION	DJB
2	2/15/2023	305 DESIGN SUBMISSION	DJB
1	12/9/2022	15% DESIGN SUB REV	DJB
0	11/11/2022	15% DESIGN SUBMISSION	DJB

SHEET NAME: **MISCELLANEOUS DETAILS (1 OF 5)**

SHEET NO.: **S-009**

BANNON, DAN \\oas1v-fs02\Data_Storage\Working\UNIVERSITY OF NEW ENGLAND\2203703 UNE Marine Science Center Pier\00_CAD\Design\Sheets\2203703-S-009.dwg - 8/14/2024

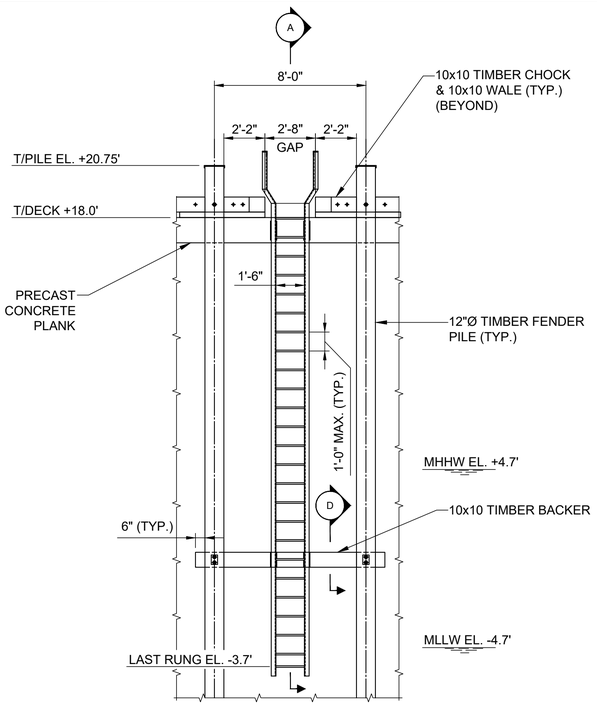

LADDER DETAIL

SCALE: 1/4" = 1'-0"

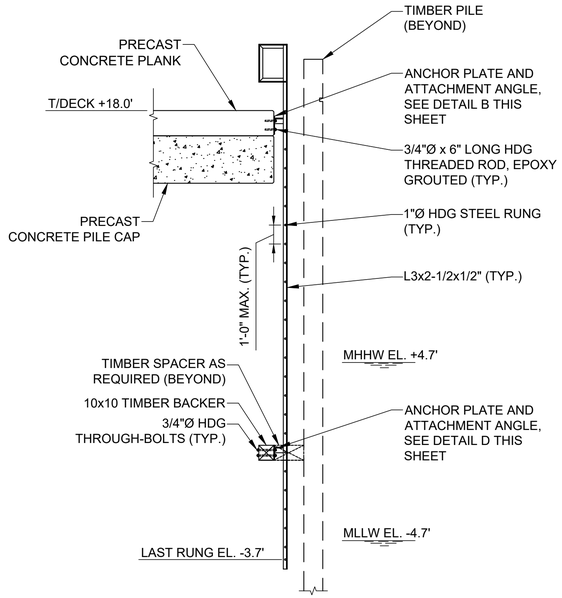

A LADDER SECTION

SCALE: 1/4" = 1'-0"

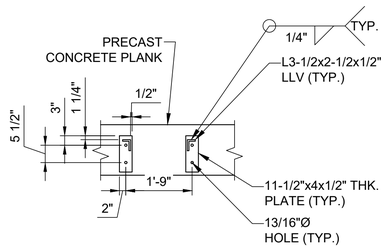

B LADDER CONNECTION (TOP)

SCALE: 1/2" = 1'-0"

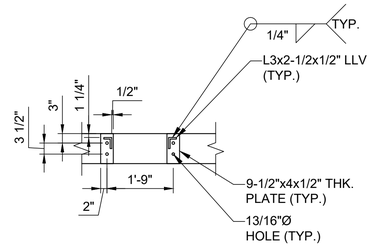

C LADDER CONNECTION (BOTTOM)

SCALE: 1/2" = 1'-0"

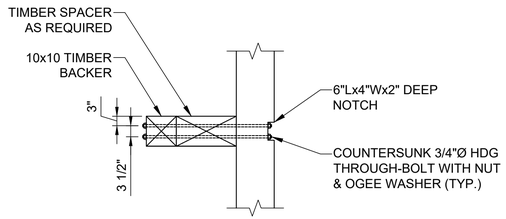

D TIMBER BACKER CONNECTION

SCALE: 1/2" = 1'-0"

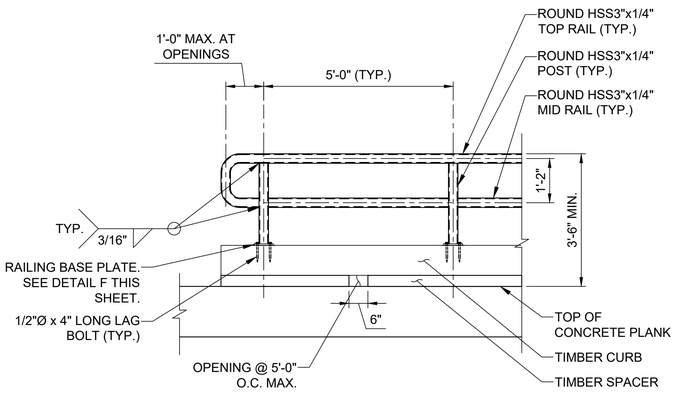

E RAILING SECTION

SCALE: 1/2" = 1'-0"

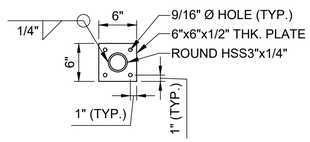

F RAILING BASEPLATE DETAIL

SCALE: 1" = 1'-0"

ELEVATION	MLLW	NAVD88*
BFE	+19.0	+14.0
HAT	+11.6	+6.6
MHHW	+9.7	+4.7
MHW	+9.3	+4.3
MSL	+4.8	-0.2
MLW	+0.3	-4.7
MLLW	0.0	-5.0

*PROJECT DATUM

Attention:

0 1"

If this scale bar does not measure 1" then drawing is not original scale.

DRAFT

Designed:	DJB
Drawn:	JAM
Checked:	BJB
Approved:	BMM
P.E. No:	13033
GEI Project	2203703

GEI Consultants
GEI CONSULTANTS, INC.
5 MILK STREET
PORTLAND, ME 04101
(207)797-8901

UNIVERSITY OF NEW ENGLAND

11 HILLS BEACH RD.
BIDDEFORD, MAINE

UNIVERSITY OF NEW ENGLAND
MARINE SCIENCE CENTER PIER
11 HILLS BEACH ROAD
BIDDEFORD, YORK COUNTY, MAINE

NO	DATE	ISSUE/REVISION	APP
6	8/14/2024	REVISED PERMIT SET	DJB
5	6/27/2024	REVISED PERMIT SET	DJB
4	9/14/2023	DEP PERMIT SET	DJB
3	6/28/2023	75% DESIGN SUBMISSION	DJB
2	2/15/2023	305 DESIGN SUBMISSION	DJB
1	12/9/2022	15% DESIGN SUB REV	DJB
0	11/11/2022	15% DESIGN SUBMISSION	DJB

SHEET NAME: **MISCELLANEOUS DETAILS (2 OF 5)**

SHEET NO.: **S-010**

FOR PERMIT

BANNON, DAN \\sos1-fs02\Data_Storage\Working\UNIVERSITY OF NEW ENGLAND\2203703 UNE Marine Science Center Pier\00_CAD\Design\Sheets\2203703-S-010.dwg - 8/14/2024

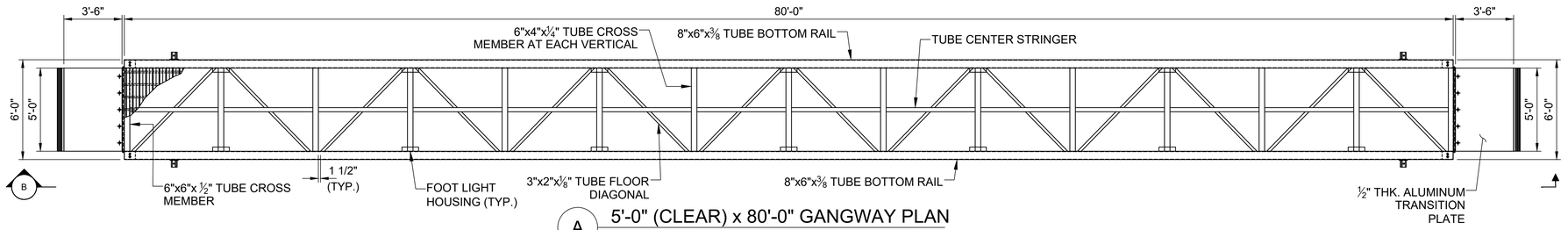

A 5'-0" (CLEAR) x 80'-0" GANGWAY PLAN

SCALE: 1/4" = 1'-0"

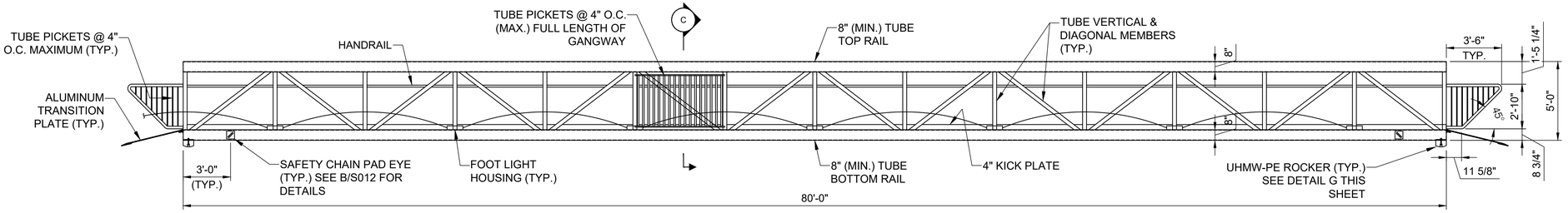

B GANGWAY ELEVATION

SCALE: 1/4" = 1'-0"

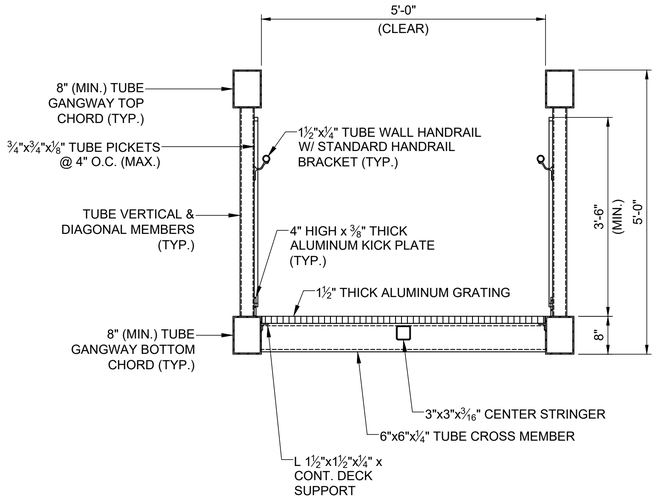

C TYPICAL GANGWAY SECTION

SCALE: 3/4" = 1'-0"

NOTE(S):
1. CONTRACTOR AND GANGWAY MANUFACTURER SHALL DETERMINE FINAL GANGWAY MEMBER SIZES AND SUBMIT TO ENGINEER FOR REVIEW AND APPROVAL.
2. ALUMINUM GRATING SHALL MEET ADA REQUIREMENTS.

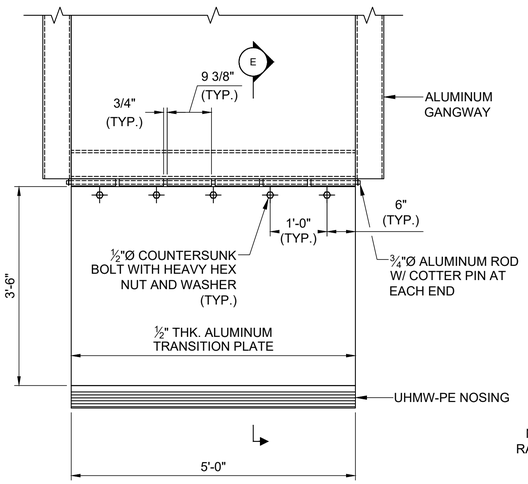

D TRANSITION PLATE DETAIL

SCALE: 3/4" = 1'-0"

NOTES:
1. CONTRACTOR SHALL DETERMINE FINAL GANGWAY MEMBER SIZES. MEMBERS ONLY SHOWN SCHEMATICALLY FOR REFERENCE.
2. CONTRACTOR SHALL SUBMIT FINAL GANGWAY SHOP DRAWINGS AND CALCULATION PACKAGE SIGNED AND SEALED BY A PROFESSIONAL ENGINEER LICENSED IN THE STATE OF MAINE.
3. ALL GANGWAY TUBE MEMBERS SHALL BE 6061-T6 ALUMINUM.
4. ALL GANGWAY TUBE MEMBERS SHALL BE CAPPED AND SEALED W/ ALUMINUM PLATES AT EXPOSED ENDS.

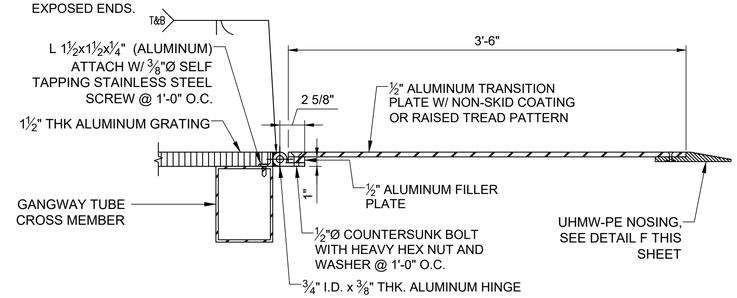

E GANGWAY TRANSITION PLATE SECTION

SCALE: 1-1/2" = 1'-0"

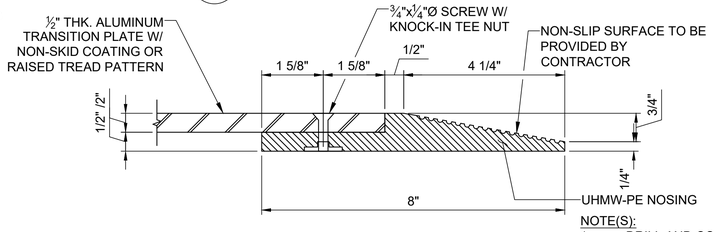

F UHMW-PE NOSING DETAIL

SCALE: 6" = 1'-0"

NOTE(S):
1. DRILL AND COUNTER BORE TRANSITION PLATES. COUNTERSINK HOLES FOR TEE NUTS TO TWICE BASE THICKNESS. SCREWS TO BE COUNTERSUNK INTO PLATE. INSTALL NEW SCREWS OVER SILICONE TO COVER EXPOSED ALUMINUM.
2. UHMW-PE NOSING DETAILS TO BE DETERMINED AFTER TRANSITION PLATE INSTALLATION AND SHALL BE IN COMPLIANCE WITH THE REQUIREMENTS SET FORTH IN ADA.

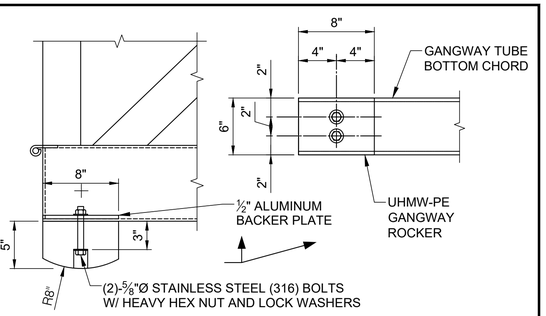

G GANGWAY ROCKER DETAIL

SCALE: 1-1/2" = 1'-0"

NOTES:
1. ROCKER MATERIAL SHALL BE VIRGIN UHMW-PE, BLACK IN COLOR.
2. ALUMINUM BACKER PLATE PLAN DIMENSIONS SHALL MATCH ROCKER PLAN DIMENSIONS.

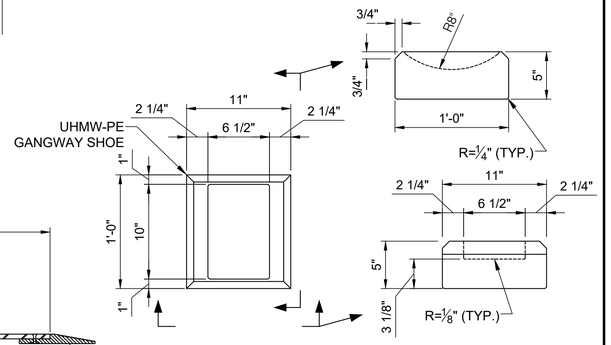

J GANGWAY SHOE DETAIL

SCALE: 1-1/2" = 1'-0"

NOTE: SHOE MATERIAL SHALL BE VIRGIN UHMW-PE, BLACK IN COLOR.

FOR PERMIT

ELEVATION	MLLW	NAVD88*
BFE	+19.0	+14.0
HAT	+11.6	+6.6
MHHW	+9.7	+4.7
MHW	+9.3	+4.3
MSL	+4.8	-0.2
MLW	+0.3	-4.7
MLLW	0.0	-5.0

*PROJECT DATUM

Attention:

0 1"

If this scale bar does not measure 1" then drawing is not original scale.

DRAFT

Designed:	DJB
Drawn:	JAM
Checked:	BJB
Approved:	BMM
P.E. No:	13033
GEI Project	2203703

GEI Consultants
GEI CONSULTANTS, INC.
5 MILK STREET
PORTLAND, ME 04101
(207)797-8901

UNE
UNIVERSITY OF NEW ENGLAND
11 HILLS BEACH RD.
BIDDEFORD, MAINE

UNIVERSITY OF NEW ENGLAND MARINE SCIENCE CENTER PIER
11 HILLS BEACH ROAD
BIDDEFORD, YORK COUNTY, MAINE

NO	DATE	ISSUE/REVISION	APP
6	8/14/2024	REVISED PERMIT SET	DJB
5	6/27/2024	REVISED PERMIT SET	DJB
4	9/14/2023	DEP PERMIT SET	DJB
3	6/28/2023	75% DESIGN SUBMISSION	DJB
2	2/15/2023	305 DESIGN SUBMISSION	DJB
1	12/9/2022	15% DESIGN SUB REV	DJB
0	11/11/2022	15% DESIGN SUBMISSION	DJB

SHEET NAME: **MISCELLANEOUS DETAILS (3 OF 5)**

SHEET NO.: **S-011**

BANNON, DAN \\oos1v-fs02\Data_Storage\Working\UNIVERSITY OF NEW ENGLAND\2203703 UNE Marine Science Center Pier\00_CAD\Design\Sheets\2203703-S-011.dwg - 8/14/2024

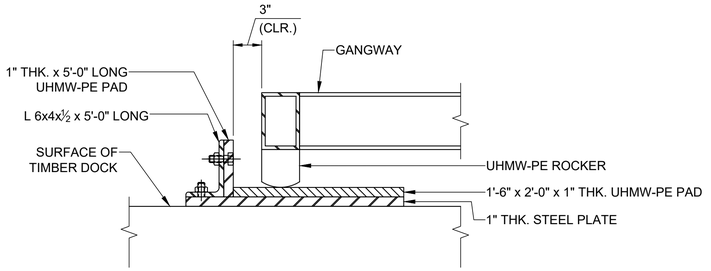

A GANGWAY LANDING AT DOCKS
SCALE: 1-1/2" = 1'-0"

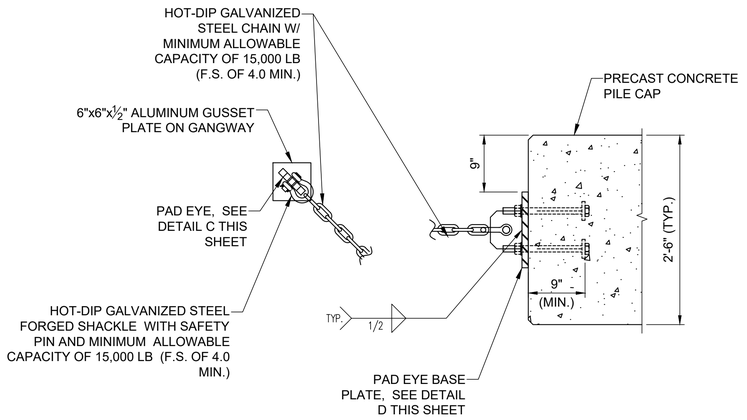

B SAFETY CHAIN ASSEMBLY
SCALE: 1" = 1'-0"

NOTE: CONTRACTOR TO DETERMINE ASSEMBLY LENGTH BASED ON PAD EYE LOCATION ON GANGWAY SUCH THAT UHMW-PE SHOE CANNOT MOVE OFF THE SUPPORTING PLATE.

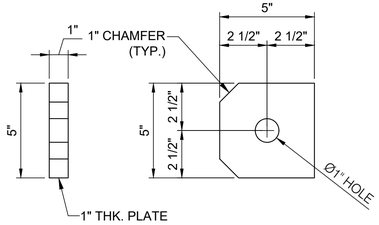

C PAD EYE DETAIL
SCALE: 3" = 1'-0"

NOTE: PAD EYE ON GANGWAY SHALL BE ALUMINUM. PAD EYE ON PILE CAP SHALL BE HDG STEEL.

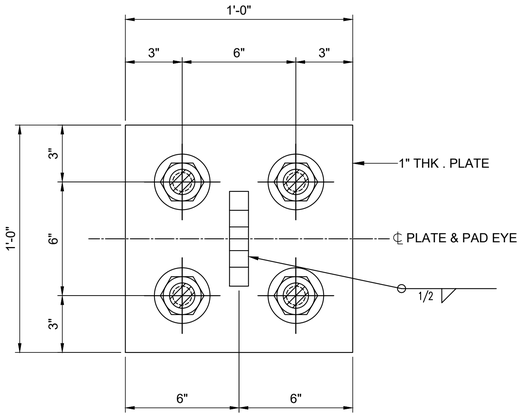

D PAD EYE BASE PLATE DETAIL
SCALE: 3" = 1'-0"

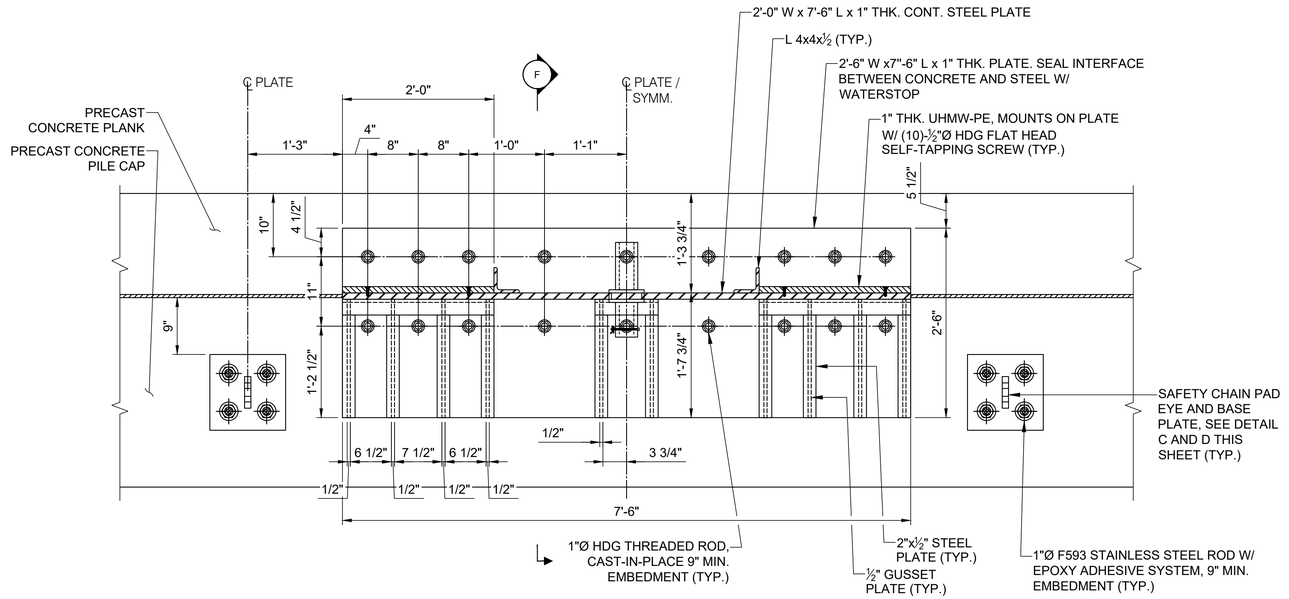

E FIFTH WHEEL ASSEMBLY - ELEVATION
SCALE: 1" = 1'-0"

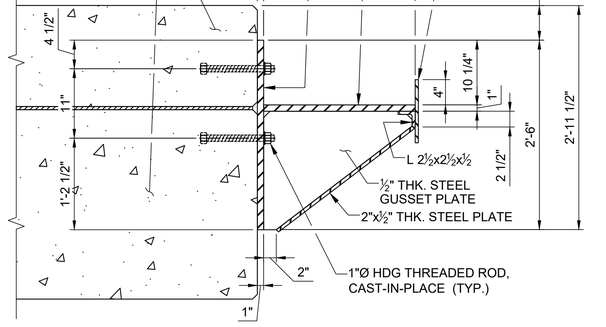

F FIFTH WHEEL ASSEMBLY - TYPICAL SECTION
SCALE: 1" = 1'-0"

ELEVATION	MLLW	NAVD88*
BFE	+19.0	+14.0
HAT	+11.6	+6.6
MHHW	+9.7	+4.7
MHW	+9.3	+4.3
MSL	+4.8	-0.2
MLW	+0.3	-4.7
MLLW	0.0	-5.0

*PROJECT DATUM

FOR PERMIT

Attention:
0 1"
If this scale bar does not measure 1" then drawing is not original scale.

DRAFT

Designed:	DJB
Drawn:	JAM
Checked:	BJB
Approved:	BMM
P.E. No:	13033
GEI Project	2203703

GEI Consultants
GEI CONSULTANTS, INC.
5 MILK STREET
PORTLAND, ME 04101
(207)797-8901

UNE
UNIVERSITY OF NEW ENGLAND
11 HILLS BEACH RD.
BIDDEFORD, MAINE

UNIVERSITY OF NEW ENGLAND MARINE SCIENCE CENTER PIER
11 HILLS BEACH ROAD
BIDDEFORD, YORK COUNTY, MAINE

NO	DATE	ISSUE/REVISION	APP
6	8/14/2024	REVISED PERMIT SET	DJB
5	6/27/2024	REVISED PERMIT SET	DJB
4	9/14/2023	DEP PERMIT SET	DJB
3	6/28/2023	75% DESIGN SUBMISSION	DJB
2	2/15/2023	305 DESIGN SUBMISSION	DJB
1	12/9/2022	15% DESIGN SUB REV	DJB
0	11/11/2022	15% DESIGN SUBMISSION	DJB

SHEET NAME
MISCELLANEOUS DETAILS (4 OF 5)

SHEET NO.
S-012

BANNON, DAN \\bost1v-fs02\Data_Storage\Working\UNIVERSITY OF NEW ENGLAND\2203703 UNE Marine Science Center Pier\00_CAD\Design\Sheets\2203703-S-012.dwg - 8/14/2024

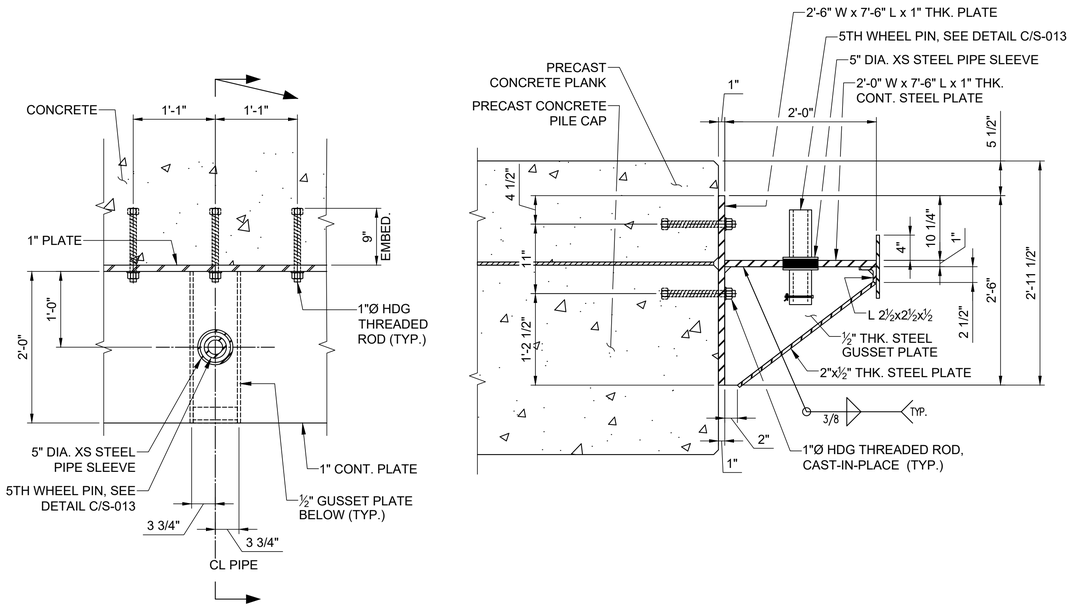

A TYPICAL 5TH WHEEL PLAN AND SECTION

SCALE: 1" = 1'-0"

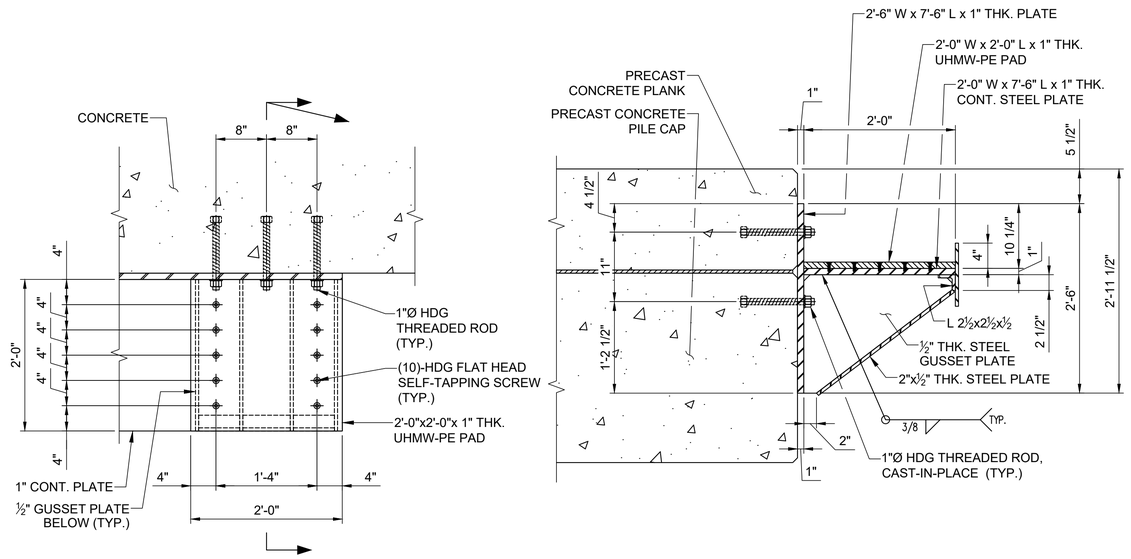

B TYPICAL UHMW-PE PAD DETAIL

SCALE: 1" = 1'-0"

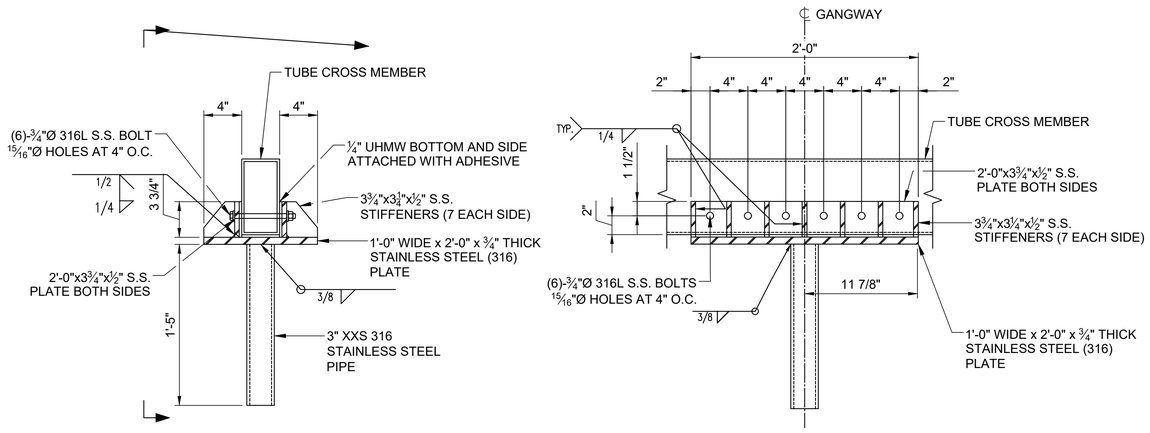

C 5TH WHEEL PIN DETAIL

SCALE: 1-1/2" = 1'-0"

ELEVATION	MLLW	NAVD88*
BFE	+19.0	+14.0
HAT	+11.6	+6.6
MHHW	+9.7	+4.7
MHW	+9.3	+4.3
MSL	+4.8	-0.2
MLW	+0.3	-4.7
MLLW	0.0	-5.0

*PROJECT DATUM

Attention:

0 1"

If this scale bar does not measure 1" then drawing is not original scale.

DRAFT

Designed:	DJB
Drawn:	JAM
Checked:	BJB
Approved:	BMM
P.E. No:	13033
GEI Project	2203703

GEI Consultants
GEI CONSULTANTS, INC.
5 MILK STREET
PORTLAND, ME 04101
(207)797-8901

UNE
UNIVERSITY OF NEW ENGLAND

11 HILLS BEACH RD.
BIDDEFORD, MAINE

UNIVERSITY OF NEW ENGLAND MARINE SCIENCE CENTER PIER

11 HILLS BEACH ROAD
BIDDEFORD, YORK COUNTY, MAINE

NO	DATE	ISSUE/REVISION	APP
6	8/14/2024	REVISED PERMIT SET	DJB
5	6/27/2024	REVISED PERMIT SET	DJB
4	9/14/2023	DEP PERMIT SET	DJB
3	6/28/2023	75% DESIGN SUBMISSION	DJB
2	2/15/2023	305 DESIGN SUBMISSION	DJB
1	12/9/2022	15% DESIGN SUB REV	DJB
0	11/11/2022	15% DESIGN SUBMISSION	DJB

SHEET NAME: **MISCELLANEOUS DETAILS (5 OF 5)**

SHEET NO.: **S-013**

FOR PERMIT

BANNON, DAN \\oss1-fs02\Data_Storage\Working\UNIVERSITY OF NEW ENGLAND\2203703 UNE Marine Science Center Pier\00_CAD\Design\Sheets\2203703-S-013.dwg - 8/14/2024

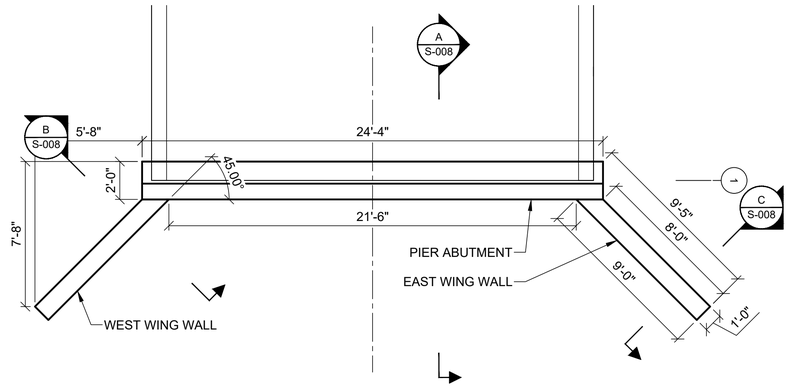

ABUTMENT PLAN

SCALE: SCALE: 3" = 1'-0"

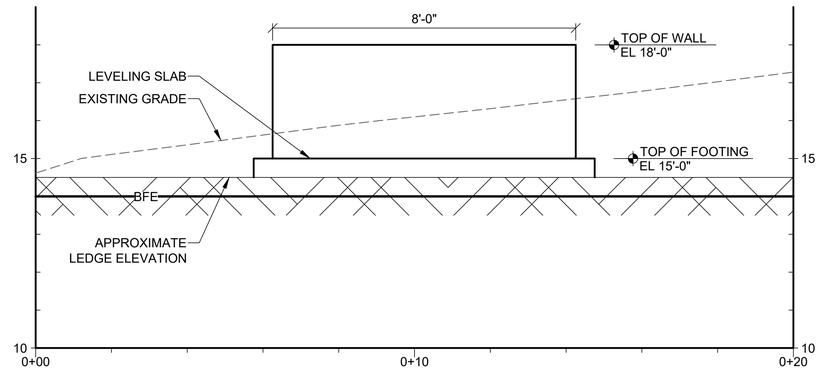

WEST WING WALL ELEVATION

SCALE: 6" = 1'-0"

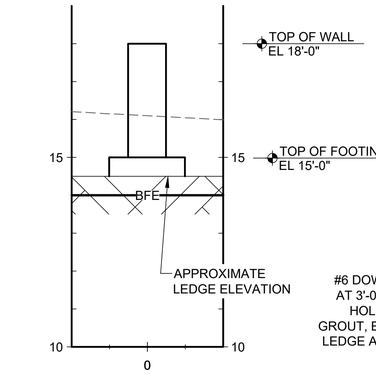

B WEST WING WALL SECTION

SCALE: 6" = 1'-0"

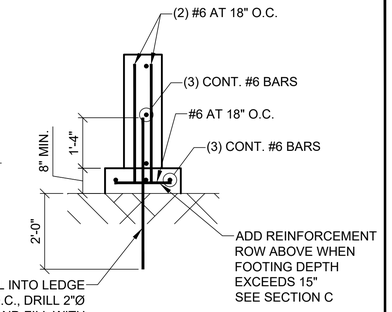

B SECTION

WEST WING WALL REINFORCEMENT

SCALE: 6" = 1'-0"

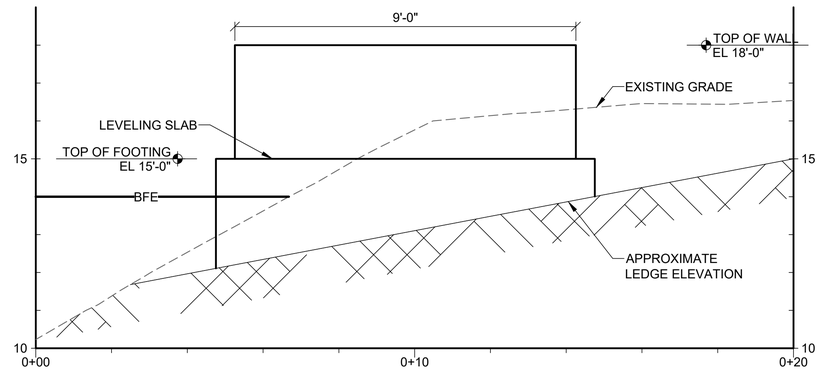

EAST WING WALL ELEVATION

SCALE: 6" = 1'-0"

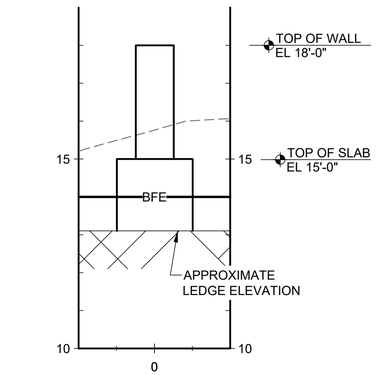

C EAST WING WALL SECTION

SCALE: 6" = 1'-0"

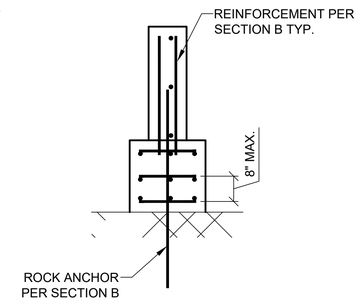

C SECTION

EAST WING WALL REINFORCEMENT

SCALE: 6" = 1'-0"

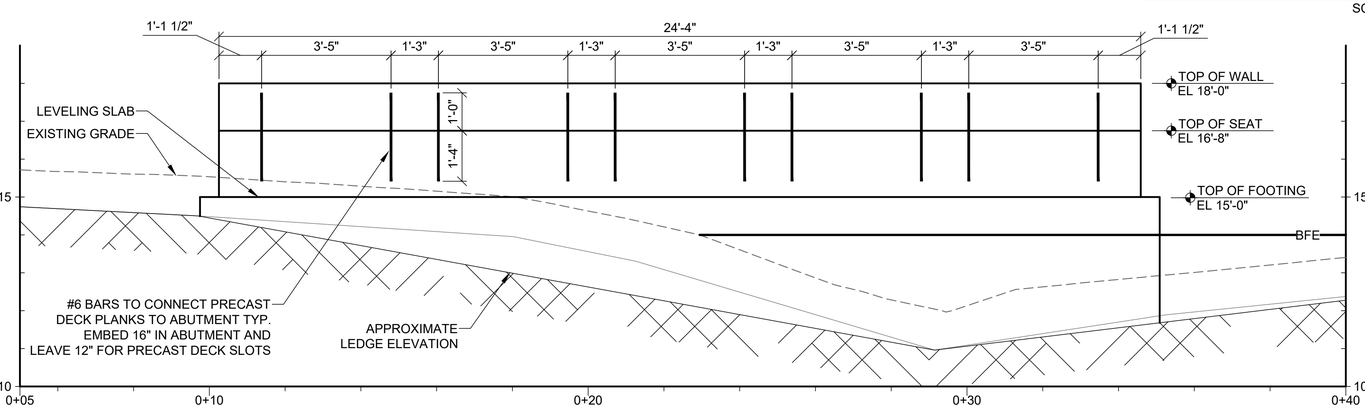

ABUTMENT ELEVATION A

SCALE: 3" = 1'-0"

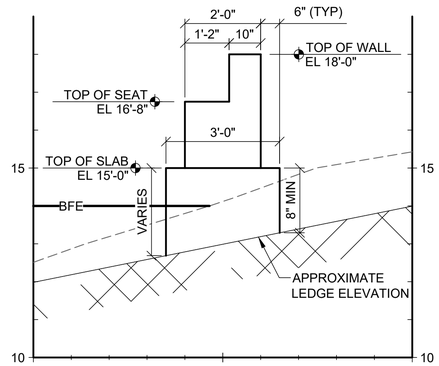

A ABUTMENT SECTION

SCALE: 6" = 1'-0"

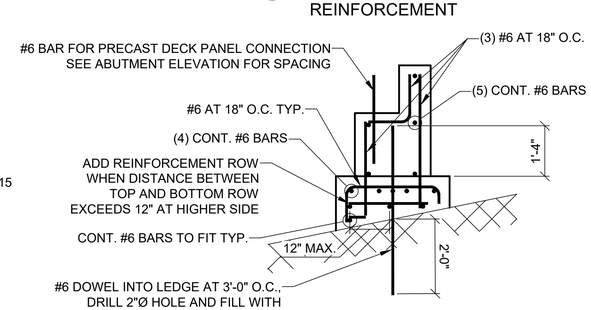

A SECTION

ABUTMENT REINFORCEMENT

SCALE: 6" = 1'-0"

FOR PERMIT

ELEVATION	MLLW	NAVD88*
BFE	+19.0	+14.0
HAT	+11.6	+6.6
MHHW	+9.7	+4.7
MHW	+9.3	+4.3
MSL	+4.8	-0.2
MLW	+0.3	-4.7
MLLW	0.0	-5.0

*PROJECT DATUM

Attention:

0 1"

If this scale bar does not measure 1" then drawing is not original scale.

DRAFT

Designed:	DJB
Drawn:	JAM
Checked:	BJB
Approved:	BMM
P.E. No:	13033
GEI Project	2203703

GEI Consultants
GEI CONSULTANTS, INC.
5 MILK STREET
PORTLAND, ME 04101
(207)797-8901

UNIVERSITY OF NEW ENGLAND

11 HILLS BEACH RD.
BIDDEFORD, MAINE

UNIVERSITY OF NEW ENGLAND MARINE SCIENCE CENTER PIER

11 HILLS BEACH ROAD
BIDDEFORD, YORK COUNTY, MAINE

NO	DATE	ISSUE/REVISION	APP
6	8/14/2024	REVISED PERMIT SET	DJB
5	6/27/2024	REVISED PERMIT SET	DJB
4	9/14/2023	DEP PERMIT SET	DJB
3	6/28/2023	75% DESIGN SUBMISSION	DJB
2	2/15/2023	305 DESIGN SUBMISSION	DJB
1	12/9/2022	15% DESIGN SUB REV	DJB
0	11/11/2022	15% DESIGN SUBMISSION	DJB

SHEET NAME: **ABUTMENT DETAILS**

SHEET NO.: **S-014**

BANNON, DAN \\bos1v-fs02\Data_Storage\Working\UNIVERSITY OF NEW ENGLAND\2203703 UNE Marine Science Center Pier\00_CAD\Design\Sheets\2203703-S-014.dwg - 8/14/2024

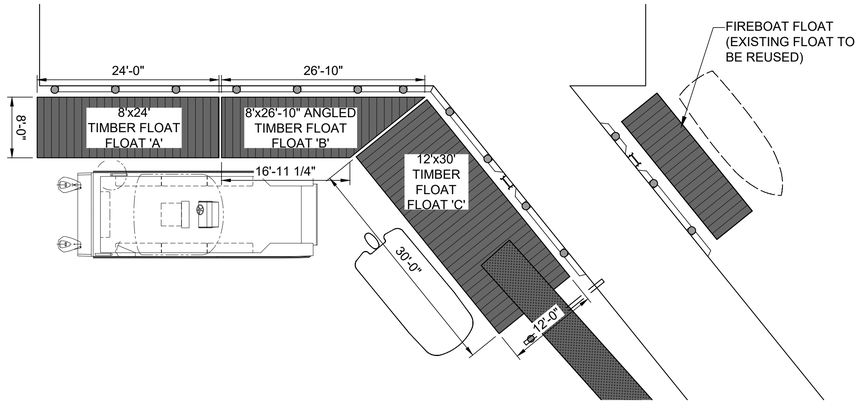

1 PLAN
FLOAT LAYOUT SCALE: 1" = 10'

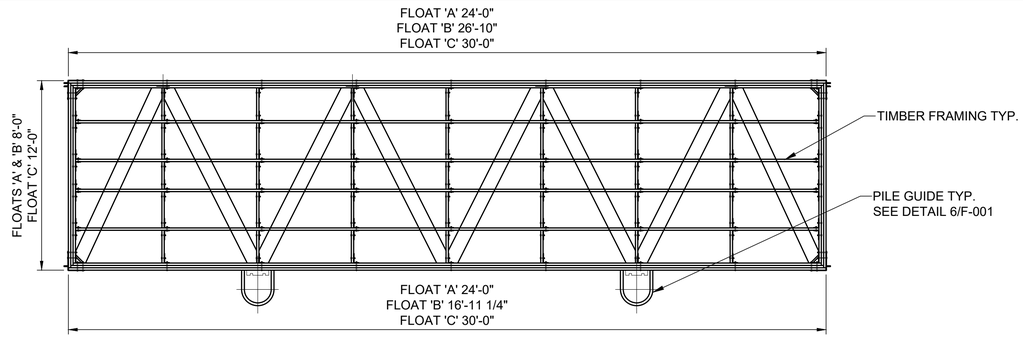

NOTES:
1. CONTRACTOR/FABRICATOR TO DETERMINE ACTUAL MEMBER SIZES PER LOADING REQUIREMENTS.

2 PLAN
TYP. FLOATING DOCK SCALE: 1" = 4'

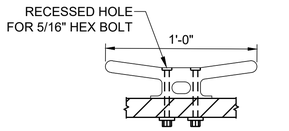

CLEAT LAYOUT:
FLOAT 'A' (4) @ EQ. SP ON SOUTH FACE
FLOAT 'B' (3) @ EQ. SP ON SOUTH FACE
FLOAT 'C' (4) @ EQ. SP ON WEST FACE

4 DETAIL
12" CLEAT SCALE: 2:1

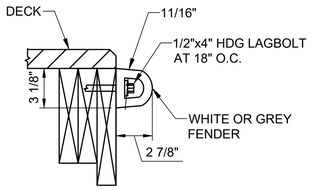

5 DETAIL
DOCK FENDER SCALE: 2:1

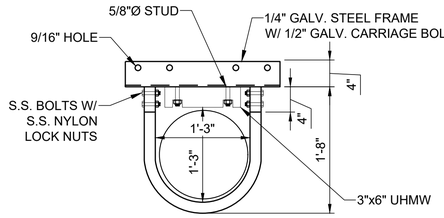

PILE GUIDE LAYOUT:
PROVIDE PILE GUIDES AT ALL TIMBER PILE LOCATIONS
FLOAT 'A' (3) REQ
FLOAT 'B' (4) REQ
FLOAT 'C' (4) REQ

6 DETAIL
PILE GUIDE SCALE: 1:1

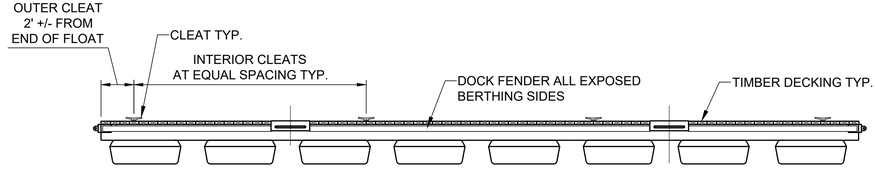

NOTES:
1. FLOTATION UNITS SHOWN ARE FOR GRAPHIC REPRESENTATION ONLY, CONTRACTOR/MANUFACTURER SHALL DETERMINE SIZE AND QUANTITY PER LOADING REQUIREMENTS.

3 ELEVATION
TYP. FLOATING DOCK SCALE: 1" = 4'

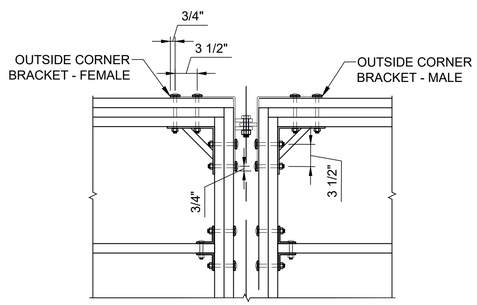

7 DETAIL
FLOAT CONNECTION SCALE: 1:1

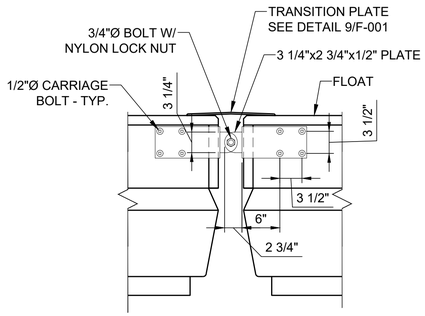

8 SECTION
FLOAT CONNECTION SCALE: 1:1

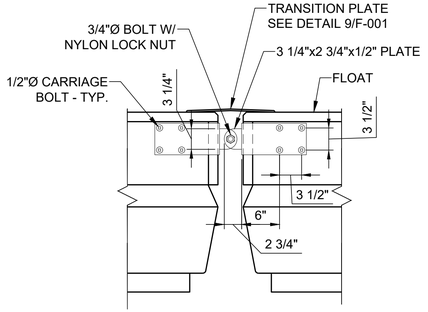

9 DETAIL
TRANSITION PLATE SCALE: 1:1

0 10 20
SCALE, FEET

0 1 2 4
SCALE, FEET

0 40 80
SCALE, FEET

ELEVATION	MLLW	NAVD88*
BFE	+19.0	+14.0
HAT	+11.6	+6.6
MHHW	+9.7	+4.7
MHW	+9.3	+4.3
MSL	+4.8	-0.2
MLW	+0.3	-4.7
MLLW	0.0	-5.0

*PROJECT DATUM

Attention:
0 1"
If this scale bar does not measure 1" then drawing is not original scale.

DRAFT

Designed:	DJB
Drawn:	JAM
Checked:	BJB
Approved:	BMM
P.E. No:	13033
GEI Project	2203703

GEI Consultants
GEI CONSULTANTS, INC.
5 MILK STREET
PORTLAND, ME 04101
(207)797-8901

UNE
UNIVERSITY OF
NEW ENGLAND
11 HILLS BEACH RD.
BIDDEFORD, MAINE

UNIVERSITY OF NEW ENGLAND MARINE SCIENCE CENTER PIER
11 HILLS BEACH ROAD
BIDDEFORD, YORK COUNTY, MAINE

NO	DATE	ISSUE/REVISION	APP
6	8/14/2024	REVISED PERMIT SET	DJB
5	6/27/2024	REVISED PERMIT SET	DJB
4	9/14/2023	DEP PERMIT SET	DJB
3	6/28/2023	75% DESIGN SUBMISSION	DJB
2	2/15/2023	305 DESIGN SUBMISSION	DJB
1	12/9/2022	15% DESIGN SUB REV	DJB
0	11/11/2022	15% DESIGN SUBMISSION	DJB

SHEET NAME
FLOAT PLAN AND DETAILS

SHEET NO.
F-001

FOR PERMIT

BANNON, DAN \\geiconsultants.com\data\Data_Storage\Working\UNIVERSITY OF NEW ENGLAND\2203703 UNE Marine Science Center Pier\00_CAD\Design\Sheets\2203703-F-001.dwg - 8/14/2024

Work-Start Notification Form

File Number: NAE-2024-01628 State: Maine County: York

Permittee: University of New England, Andrew Phillippe
Date Verification Issued: 3/28/2025
Project Manager: Jana Jacobson

At least two weeks prior to commencing the activity authorized by this permit, sign this certification and return it to the following address:

US ARMY CORPS OF ENGINEERS
New England District
Attn: Jana Jacobson
cenae-r-me@usace.army.mil
or
Jana.L.Jacobson@usace.army.mil
(207) 233-2117

Please note that your permitted activity is subject to a compliance inspection by a U. S. Army Corps of Engineers (USACE) representative. Failure to comply with any terms or conditions of this authorization may result in the USACE suspending, modifying or revoking the authorization and/or issuing a Class I administrative penalty, or initiating other appropriate legal action.

The people (e.g. contractor) listed below will do the work, and they understand the permit's conditions and limitations.

Contractor Name/Contractor Firm: _____
Business Address: _____
_____
Contractor Phone and Email: _____

Proposed Construction Dates: Start: _____ Finish: _____

_____ _____
Signature of Permittee Date

U.S. Army Corps of Engineers (USACE)

CERTIFICATION OF COMPLIANCE WITH DEPARTMENT OF THE ARMY PERMIT

For use of this form, see Section 404 of the Clean Water Act, Section 10 of the Rivers and Harbors Act of 1899, and Section 103 of the Marine Protection, Research, and Sanctuaries Act; the proponent agency is CECW-COR.

Form Approved - OMB No. 0710-0003 Expires 2027-10-31

The Agency Disclosure Notice (ADN)

The Public reporting burden for this collection of information, 0710-0003, is estimated to average 10 minutes per response, including time for reviewing instructions, searching existing data sources, gathering and maintaining the data needed, and completing and reviewing the collection of information. Send comments regarding the burden estimate or burden reduction suggestions to the Department of Defense, Washington Headquarters Services, at whs.mc-alex.esd.mbx.dd-dod-information-collections@mail.mil. Respondents should be aware that notwithstanding any other provision of law, no person shall be subject to any penalty for failing to comply with a collection of information if it does not display a currently valid OMB control number.

PURPOSE: This form is used by recipients of U.S. Army Corps of Engineer Regulatory permits to certify compliance with the permit terms and conditions.

Your permitted activity is subject to a compliance inspection by a U.S. Army Corps of Engineers representative. If you fail to comply with this permit, you are subject to permit suspension, modification, or revocation.

Upon completion of the activity authorized by this permit and any mitigation required by the permit, sign this certification and return it to the U.S. Army Corps of Engineers, New England District, Regulatory Office.

The certification can be submitted by email at Enter Email Name @usace.army.mil or by mail at the below address:

U.S. Army Corps of Engineers
New England District Office
Street Address: 696 Virginia Road
City: Concord State: Massachusetts Zip Code: New England District Office

COMPLETED BY THE CORPS

Corps Action Number: NAE-2024-01628

Permit Type: General Permit

General Permit Number and Name (*if applicable*):

Name of Permittee: Andrew Phillippe

Project Name: University of New England Marine Science Center Pier

Project Location (*physical address*): 11 Hills Beach Road
Biddeford, Maine

PERMITTEE'S CERTIFICATION

Date Work Started:

Date Work Completed:

Enclose photographs showing the completed project (*if available*).

I _____ hereby certify that the work authorized by the above referenced permit has been completed in accordance with all of the permit terms and conditions, and that any required compensatory mitigation has been completed in accordance with the permit conditions.

Name	Date	Signature

STATE OF MAINE
DEPARTMENT OF ENVIRONMENTAL PROTECTION
17 STATE HOUSE STATION AUGUSTA, MAINE 04333-0017

DEPARTMENT ORDER

IN THE MATTER OF

UNIVERSITY OF NEW ENGLAND	) NATURAL RESOURCES PROTECTION ACT
Biddeford, York County	) COASTAL WETLAND ALTERATION
COMMERCIAL PIER SYSTEM	) WATER QUALITY CERTIFICATION
L-18314-4P-BE-N (approval)	) FINDINGS OF FACT AND ORDER
*CORRECTED ORDER	

Pursuant to the provisions of 38 M.R.S. §§ 480-A–480-JJ, Section 401 of the Clean Water Act (33 U.S.C. § 1341), and Chapters 310, 315, and 335 of Department rules, the Department of Environmental Protection (Department) has considered the application of UNIVERSITY OF NEW ENGLAND (applicant) with the supportive data, agency review comments, public comments, and other related materials on file and FINDS THE FOLLOWING FACTS:

1. PROJECT DESCRIPTION:

A. History of Project: In Department Order #L-18314-22-A-N, dated April 12, 1993, the Department granted after-the-fact approval to the University of New England for an expansion of the main campus. In Department Order #L-18314-22/31-J-M, dated December 19, 1996, the Department approved the construction of athletic facilities, a service road, a pier system, and seasonal floating dock on the Saco River. In Department Order #L-18314-22-L-A, dated May 31, 2000, the Department approved the construction of the Marine Science and Research Center and included a modification to the pier and floating dock. In Department Order #L-18314-22-AY-M/L-18314-4P-AZ-M, dated July 13, 2017, the Department approved the addition of two six-foot wide by 16-foot long seasonal floats attached seaward and perpendicular to the existing permanent floats oriented parallel to shore. A second, seasonal pier system was installed on Jordan Point in 2016. In Department Order #L-18314-22-BC-M/4P-BD-N, dated December 7, 2023, the Department approved the replacement of the second seasonal pier with a permanent pier system consisting of a six-foot wide by 63-foot long fixed pier, an existing four-foot wide by 48-foot long seasonal aluminum gangway, and an existing 10-foot long by 60-foot wide seasonal float system. The completed project resulted in 16 square feet of direct impacts and 1732 square feet of indirect impacts to the coastal wetland.

B. Summary: The applicant proposes to construct a new commercial size pier to provide all-tide access for the Marine Science Center and dock space for the City of Biddeford fireboat used for public safety. The proposed permanent pier structure will be built in three sections: section one consist of a 23-foot wide by 30-foot deck with a security gate, that connects to the second 14-foot wide by 100-foot long pier structure that seaward into the river, and the third pier section a 23-foot wide an 80-foot long pier head that will be oriented parallel to shore and a five-foot wide by 80-foot long permanent gangway perpendicular to the shore. The pier head and gangway will be flanked by four permanent floats running end to end parallel to shore; an 8-foot wide by

24-foot long float an 8-foot wide by 27-foot long float, a 12-foot wide by 30-foot long gangway landing float to provide all-tide access on the west side of the pier and a six-foot wide by 20-foot float to provide a tie-up location for the City of Biddeford's Fire Boat on the east side of the pier, both perpendicular to the shore. The pier system will be supported by 25 concrete-filled steel pipe piles and a concrete abutment which connects the pier to the proposed access road. The project as proposed will result in 84 square feet of direct impacts to the coastal wetland due to pilings, and 3,579 square feet of indirect impacts to the coastal wetland due to shading from the pier, ramp, and floats. The large size of the pier and gangway will accommodate an outdoor covered classroom, ADA-compliant access and fireboat tiedown float, and vehicular access to the pier for transportation of research and emergency equipment. Between this proposed pier and the currently existing pier system, cumulative direct impacts to the coastal wetland will total 100 square feet, and cumulative indirect impacts to the coastal wetland will total 5,311 square feet.

In addition to the proposed pier system, an upland access road connecting the existing road to the proposed pier will be constructed, including associated site grading, drainage, and stormwater management features. Work on the access road will result in approximately 475 square feet of impacts adjacent to the coastal wetland. Upland work proposed * is exempt pursuant to M.R.S 38 §488(27)(A).

The proposed project is shown on a set of plans, the first of which is titled "University of New England Marine Science Center Pier", completed by GEI Consultants, Inc. and dated April 22, 2024. The project site is located at 11 Hills Beach Road in the Town of Biddeford.

C. Current Use of the Site: The project site is located on an approximately 50-acre parcel of land that is developed with various university buildings and a permanent pier system. The parcel is identified as Lot 4 on Map 52 of the City of Biddeford's tax maps.

D. Public Interest: The Department received emails from one individual between September 4 and December 11, 2024. The interested person expressed concerns related to the Town's project review process. Additionally, the interested person stated that the applicant did not consider alternative locations for the pier that would be less impactful to the resource. After reviewing the application, the Department determined that the applicant provided a sufficient alternative analysis which is further discussed in Section 4.

The interested person submitted a public hearing request on July 1, 2024. The request was reviewed by the Department and a response sent on August 20, 2024, citing that the application did not meet the Chapter 2 criteria for the Board to hold a hearing.

2. EXISTING SCENIC, AESTHETIC, RECREATIONAL OR NAVIGATIONAL USES:

The Natural Resources Protection Act (NRPA), in 38 M.R.S. § 480-D(1), requires the applicant to demonstrate that the proposed project will not unreasonably interfere with existing scenic, aesthetic, recreational and navigational uses.

In accordance with Chapter 315, *Assessing and Mitigating Impacts to Scenic and Aesthetic Uses* (06-096 C.M.R. ch. 315, effective June 29, 2003), the applicant submitted a copy of the Department's Visual Evaluation Field Survey Checklist as Appendix A to the application along with a description of the property and the proposed project. The applicant also submitted several photographs of the proposed project site and surroundings including an aerial photograph of the project site.

The proposed project is located in the Saco River, which is a scenic resource visited by the general public, in part, for the use, observation, enjoyment and appreciation of its natural and cultural visual qualities. Given the piers on abutting properties and the existing pier on the same parcel, the proposed pier will not substantially alter the visual aesthetic of the riverbank from the river. The proposed pier system is of similar size, scale, and design as nearby pier systems, including a commercial marina with slips located directly across the river and visible from the project site.

The Department staff utilized the Department's Visual Impact Assessment Matrix in its evaluation of the proposed project and the Matrix showed an acceptable potential visual impact rating for the proposed project. Based on the information submitted in the application and the visual impact rating, the Department determined that the location and scale of the proposed activity is compatible with the existing visual quality and landscape characteristics found within the viewshed of the scenic resource in the project area.

The Department of Marine Resources (DMR) reviewed the project and stated that the proposed project should not cause any significant adverse impact to navigation or recreation based on the nature of the project and its location.

The Department finds that the proposed activity will not unreasonably interfere with existing scenic, aesthetic, recreational or navigational uses of the river.

3. SOIL EROSION:

The NRPA, in 38 M.R.S. § 480-D(2), requires the applicant to demonstrate that the proposed project will not cause unreasonable erosion of soil or sediment nor unreasonably inhibit the natural transfer of soil from the terrestrial to the marine or freshwater environment.

Construction will take place from the upland and by barge. Access by land will occur on existing roads, and the proposed new road will be started early in construction to provide an additional route for construction access, material deliveries, and staging. When the site is being accessed by barge, the contractor will avoid the nearby federal navigation

channel and adjacent waterfront facilities during construction activity. Any work within the resource will be conducted in compliance with the standard November 8th-April 9th in-water work window discussed in Finding 4. A certified erosion control contractor will be on site.

The Department finds that the activity will not cause unreasonable erosion of soil or sediment nor unreasonably inhibit the natural transfer of soil from the terrestrial to the marine or freshwater environment.

4. HABITAT CONSIDERATIONS:

The NRPA, in 38 M.R.S. § 480-D(3), requires the applicant to demonstrate that the proposed project will not unreasonably harm significant wildlife habitat, freshwater wetland plant habitat, threatened or endangered plant habitat, aquatic or adjacent upland habitat, travel corridor, freshwater, estuarine or marine fisheries or other aquatic life.

The project site consists of ledge in the upper intertidal, grading to rockweed-covered rocky shore then to mixed coarse and fine sediments. Eelgrass resources were documented in the subtidal near the project area prior to 1997 but have not been mapped in recent years.

In its review, the Department of Marine Resources (DMR) stated that the project as proposed would have direct impacts to marine resources and habitat in the footprint of the pier, and recommended that *piles be driven within the in-water work window of November 8th-April 9th. The mouth of the Saco River is utilized by diadromous fish species including Atlantic Salmon, alewife, and sea run brook trout. Atlantic and short nose sturgeon may be present year round in this area*. DMR further recommended that the applicant use a vibratory hammer or a bubble screen for noise mitigation.

The applicant concurred that work will only occur during the winter work window.

According to the Department's Geographic Information System (GIS) database there are no mapped Essential or Significant Wildlife Habitats located at the site. The Maine Department of Inland Fisheries and Wildlife (MDIFW) reviewed the proposed project and stated that the project is located adjacent to but outside of Tidal Waterfowl and Wading Bird Habitat (TWWH), a designated Significant Wildlife Habitat. MDIFW stated that minimal impacts to piping plover and Blanding's turtle habitat are anticipated and provided general recommendations including minimizing vegetation removal and soil disturbance, and that time spent in the water should be minimized to the greatest extent practicable.

The applicant responded to these comments, and agreed to minimize vegetation removal, soil disturbance, and time spent in the water.

The Department finds that the activity will not unreasonably harm any significant wildlife habitat, freshwater wetland plant habitat, threatened or endangered plant habitat, aquatic

or adjacent upland habitat, travel corridor, freshwater, estuarine or marine fisheries or other aquatic life provided *the in-water work is only conducted between November 8th- April 9th of any given year.

5. WATER QUALITY CONSIDERATIONS:

The applicant proposes to use lumber treated with chromated copper arsenate (CCA) to construct the pier. To protect water quality, all CCA-treated lumber must be cured on dry land in a manner that exposes all surfaces to the air for 21 days prior to the start of construction.

Provided that CCA-treated lumber is cured as described above, the Department finds that the proposed project will not violate any state water quality law, including those governing the classification of the State's waters.

6. WETLANDS AND WATERBODIES PROTECTION RULES:

The proposed project will result in 84 square feet of direct impacts and 4,784 square feet of indirect impacts to the coastal wetland from the new pier system. The overall cumulative impacts from the existing pier and proposed project will be 100 square feet of direct impacts to the coastal resource and 5,311 square feet of indirect impacts to the coastal resource. Coastal wetlands are wetlands of special significance.

The *Wetlands and Waterbodies Protection Rules*, 06-096 C.M.R. ch. 310 (last amended November 11, 2018), interpret and elaborate on the Natural Resources Protection Act (NRPA) criteria for obtaining a permit. The rules guide the Department in its determination of whether a project's impacts would be unreasonable. A proposed project would generally be found to be unreasonable if it would cause a loss in wetland area, functions and values and there is a practicable alternative to the project that would be less damaging to the environment. Each application for a NRPA permit that involves a coastal wetland alteration must provide an analysis of alternatives in order to demonstrate that a practicable alternative does not exist.

A. Avoidance. An applicant must submit an analysis of whether there is a practicable alternative to the project that would be less damaging to the environment and this analysis is considered by the Department in its assessment of the reasonableness of any impacts. Additionally, for activities proposed in, on, or over wetlands of special significance the activity must be among the types listed in Chapter 310, § 5(A) or a practicable alternative less damaging to the environment is considered to exist and the impact is unreasonable. A pier is a water dependent use and its proposed construction is among the activities specifically provided for in Chapter 310, § 5(A)(1)(c). Additionally, any project related to health and safety is among the activities specifically provided for in Chapter 310, § 5(A)(1)(a).

The applicant submitted an alternatives analysis for the proposed project completed by Site Design Associates and dated June 17, 2024, with a last revision date of December

10, 2024. The purpose of the proposed project is to provide all-tide, year-round access to the resource for research and education operations associated with the Arthur P. Girard Marine Science Center (GMSC) at the University of New England. A secondary project purpose is to provide docking space for the City of Biddeford's fireboat for emergency response and safety. The applicant plans to launch a variety of research vessels from the proposed pier, including a 31-foot-long research vessel and potentially larger ones in the future. The City's fireboat is 19 feet long. The applicant considered not building the new pier system and instead utilizing the existing pier on the parcel; however, this existing pier is seasonal, including the floats that are hauled out of the water each winter limiting year-round access that is required to support the Universities' marine science programs. Additionally, the existing pier does not provide a docking area for the City of Biddeford's fireboat. Therefore, this alternative was rejected. The applicant considered a seasonal gangway and l floats; however, research and access to the water is required for emergency response from the City and for year-round, all-tide access to the resource for educational purposes. Finally, the applicant considered using public facilities including marinas, boat launches and moorings to moor and launch research vessels; however, access to the water can be time-sensitive due to course schedules or the need to access the water during certain tide cycles. With shuttling of staff, students, and equipment, and the lack of reliable parking, this alternative was rejected. The private marinas in the area have long waitlists for private slips and do not have the capacity to handle the frequent use and group size that the University requires to meet their education and research mission

B. Minimal Alteration. In support of an application and to address the analysis of the reasonableness of any impacts of a proposed project, an applicant must demonstrate that the amount of coastal wetland to be altered will be kept to the minimum amount necessary for meeting the overall purpose of the project. During the planning phase of this project, the applicant selected the pier location with the shortest length necessary to reach adequate water depths for all -tide access. In addition, the dimensions of the pier head were reduced from 28feet wide by 100feet long to the currently proposed 23 feet wide by 80-feet long to reduce impacts to the coastal resource.

C. Compensation. In accordance with Chapter 310, § 5(C)(6)(b), compensation may be required to achieve the goal of no net loss of coastal wetland functions and values. This project will not result in over 500 square feet of fill in the resource, which is the threshold over which compensation is generally required. Further, the proposed project will not have an adverse impact on marine resources or wildlife habitat as determined by DMR and MDIFW. For these reasons, the Department determined that compensation is not required.

The Department finds that the applicant has avoided and minimized coastal wetland impacts to the greatest extent practicable, and that the proposed project represents the least environmentally damaging alternative that meets the overall purpose of the project.

7. OTHER CONSIDERATIONS:

The Department finds, based on the design, proposed construction methods, and location, the proposed project will not inhibit the natural transfer of soil from the terrestrial to the marine environment, will not interfere with the natural flow of any surface or subsurface waters, and will not cause or increase flooding. The proposed project is not located in a coastal sand dune system, is not a crossing of an outstanding river segment, and does not involve dredge spoils disposal or the transport of dredge spoils by water.

BASED on the above findings of fact, and subject to the conditions listed below, the Department makes the following conclusions pursuant to 38 M.R.S. §§ 480-A–480-JJ and Section 401 of the Clean Water Act (33 U.S.C. § 1341):

A. The proposed activity will not unreasonably interfere with existing scenic, aesthetic, recreational, or navigational uses.

B. The proposed activity will not cause unreasonable erosion of soil or sediment.

C. The proposed activity will not unreasonably inhibit the natural transfer of soil from the terrestrial to the marine or freshwater environment.

D. The proposed activity will not unreasonably harm any significant wildlife habitat, freshwater wetland plant habitat, threatened or endangered plant habitat, aquatic or adjacent upland habitat, travel corridor, freshwater, estuarine, or marine fisheries or other aquatic life provided *in-water winter work windows are utilized as described in Finding 3.

E. The proposed activity will not unreasonably interfere with the natural flow of any surface or subsurface waters.

F. The proposed activity will not violate any state water quality law including those governing the classifications of the State's waters provided that CCA-treated lumber is cured as described in Finding 5.

G. The proposed activity will not unreasonably cause or increase the flooding of the alteration area or adjacent properties.

H. The proposed activity is not on or adjacent to a sand dune.

I. The proposed activity is not on an outstanding river segment as noted in 38 M.R.S. § 480-P.

THEREFORE, the Department APPROVES the above noted application of UNIVERSITY OF NEW ENGLAND to construct a research pier as described in Finding 1, SUBJECT TO THE ATTACHED CONDITIONS, and all applicable standards and regulations:

1. Standard Conditions of Approval, a copy attached.

2. The applicant shall take all necessary measures to ensure that their activities or those of their agents do not result in measurable erosion of soil on the site during the construction of the project covered by this approval.

3. Severability. The invalidity or unenforceability of any provision, or part thereof, of this License shall not affect the remainder of the provision or any other provisions. This License shall be construed and enforced in all respects as if such invalid or unenforceable provision or part thereof had been omitted.

4. *All in-water construction shall only occur from November 8th-April 9th of any given year.

5. All CCA-treated lumber shall be cured on dry land in a manner that exposes all surfaces to the air for 21 days prior to the start of construction.

THIS APPROVAL DOES NOT CONSTITUTE OR SUBSTITUTE FOR ANY OTHER REQUIRED STATE, FEDERAL OR LOCAL APPROVALS NOR DOES IT VERIFY COMPLIANCE WITH ANY APPLICABLE SHORELAND ZONING ORDINANCES.

DONE AND DATED IN AUGUSTA, MAINE, THIS 2ND DAY OF MAY, 2025.

DEPARTMENT OF ENVIRONMENTAL PROTECTION

CORRECTING THE ORDER DATED APRIL 11, 2025. The effective date and expiration date remain the same as in the original.

BY:_____
For: Melanie Loyzim, Commissioner

PLEASE NOTE THE ATTACHED SHEET FOR GUIDANCE ON APPEAL PROCEDURES.

PCS/L18314BEN/ATS#92653

Natural Resources Protection Act (NRPA)
Standard Conditions

THE FOLLOWING STANDARD CONDITIONS SHALL APPLY TO ALL PERMITS GRANTED UNDER THE NATURAL RESOURCES PROTECTION ACT, 38 M.R.S. §§ 480-A ET SEQ., UNLESS OTHERWISE SPECIFICALLY STATED IN THE PERMIT.

A. Approval of Variations From Plans. The granting of this permit is dependent upon and limited to the proposals and plans contained in the application and supporting documents submitted and affirmed to by the applicant. Any variation from these plans, proposals, and supporting documents is subject to review and approval prior to implementation.

B. Compliance With All Applicable Laws. The applicant shall secure and comply with all applicable federal, state, and local licenses, permits, authorizations, conditions, agreements, and orders prior to or during construction and operation, as appropriate.

C. Erosion Control. The applicant shall take all necessary measures to ensure that his activities or those of his agents do not result in measurable erosion of soils on the site during the construction and operation of the project covered by this Approval.

D. Compliance With Conditions. Should the project be found, at any time, not to be in compliance with any of the Conditions of this Approval, or should the applicant construct or operate this development in any way other the specified in the Application or Supporting Documents, as modified by the Conditions of this Approval, then the terms of this Approval shall be considered to have been violated.

E. Time frame for approvals. If construction or operation of the activity is not begun within four years, this permit shall lapse and the applicant shall reapply to the Board for a new permit. The applicant may not begin construction or operation of the activity until a new permit is granted. Reapplications for permits may include information submitted in the initial application by reference. This approval, if construction is begun within the four-year time frame, is valid for seven years. If construction is not completed within the seven-year time frame, the applicant must reapply for, and receive, approval prior to continuing construction.

F. No Construction Equipment Below High Water. No construction equipment used in the undertaking of an approved activity is allowed below the mean high water line unless otherwise specified by this permit.

G. Permit Included In Contract Bids. A copy of this permit must be included in or attached to all contract bid specifications for the approved activity.

H. Permit Shown To Contractor. Work done by a contractor pursuant to this permit shall not begin before the contractor has been shown by the applicant a copy of this permit.

Revised September 2016

STATE OF MAINE
DEPARTMENT OF ENVIRONMENTAL PROTECTION
17 STATE HOUSE STATION, AUGUSTA, MAINE 04333

Erosion Control for Homeowners

Before Construction

1. If you have hired a contractor, make sure you discuss your permit with them. Talk about what measures they plan to take to control erosion. Everybody involved should understand what the resource is, and where it is located. Most people can identify the edge of a lake or river. However, the edges of wetlands are often not so obvious. Your contractor may be the person actually pushing dirt around, but you are both responsible for complying with the permit.

2. Call around to find where erosion control materials are available. Chances are your contractor has these materials already on hand. You probably will need silt fence, hay bales, wooden stakes, grass seed (or conservation mix), and perhaps filter fabric. Places to check for these items include farm & feed supply stores, garden & lawn suppliers, and landscaping companies. It is not always easy to find hay or straw during late winter and early spring. It also may be more expensive during those times of year. Plan ahead – buy a supply early and keep it under a tarp.

3. Before any soil is disturbed, make sure an erosion control barrier has been installed. The barrier can be either a silt fence, a row of staked hay bales, or both. Use the drawings below as a guide for correct installation and placement. The barrier should be placed as close as possible to the soil-disturbance activity.

4. If a contractor is installing the erosion control barrier, double check it as a precaution. Erosion control barriers should be installed "on the contour," meaning at the same level or elevation across the land slope, whenever possible. This keeps stormwater from flowing to the lowest point along the barrier where it can build up and overflow or destroy the barrier.

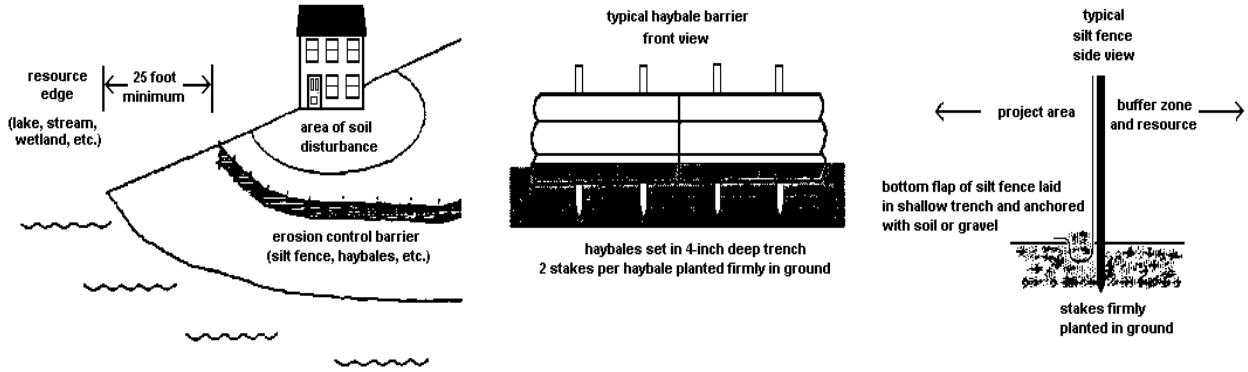

During Construction

1. Use lots of hay or straw mulch on disturbed soil. The idea behind mulch is to prevent rain from striking the soil directly. It is the force of raindrops hitting the bare ground that makes the soil begin to move downslope with the runoff water, and cause erosion. More than 90% of erosion is prevented by keeping the soil covered.

2. Inspect your erosion control barriers frequently. This is especially important after a rainfall. If there is muddy water leaving the project site, then your erosion controls are not working as intended. You or your contractor then need to figure out what can be done to prevent more soil from getting past the barrier.

3. Keep your erosion control barrier up and maintained until you get a good and healthy growth of grass and the area is permanently stabilized.

After Construction

1. After your project is finished, seed the area. Note that all ground covers are not equal. For example, a mix of creeping red fescue and Kentucky bluegrass is a good choice for lawns and other high-maintenance areas. But this same seed mix is a poor selection for stabilizing a road shoulder or a cut bank that you don't intend to mow. Your contractor may have experience with different seed mixes, or you might contact a seed supplier for advice.

2. Do not spread grass seed after September 15. There is the likelihood that germinating seedlings could be killed by a frost before they have a chance to become established. Instead, mulch the area with a thick layer of hay or straw. In the spring, rake off the mulch and then seed the area. Don't forget to mulch again to hold in moisture and prevent the seed from washing away or being eaten by birds or other animals.

3. Keep your erosion control barrier up and maintained until you get a good and healthy growth of grass and the area is permanently stabilized.

Why Control Erosion?

To Protect Water Quality

When soil erodes into protected resources such as streams, rivers, wetlands, and lakes, it has many bad effects. Eroding soil particles carry phosphorus to the water. An excess of phosphorus can lead to explosions of algae growth in lakes and ponds called blooms. The water will look green and can have green slime in it. If you are near a lake or pond, this is not pleasant for swimming, and when the soil settles out on the bottom, it smothers fish eggs and small animals eaten by fish. There are many other effects as well, which are all bad.

To Protect the Soil

It has taken thousands of years for our soil to develop. Its usefulness is evident all around us, from sustaining forests and growing our garden vegetables, to even treating our septic wastewater! We cannot afford to waste this valuable resource.

To Save Money ($$)

Replacing topsoil or gravel washed off your property can be expensive. You end up paying twice because State and local governments wind up spending your tax dollars to dig out ditches and storm drains that have become choked with sediment from soil erosion.

DEP INFORMATION SHEET

Appeals to the Board of Environmental Protection

Date: November 2024 Contact: Clerk.BEP@maine.gov or (207) 314-1458

SUMMARY

This document provides information regarding a person's rights and obligations in filing an administrative or judicial appeal of: (1) a final license decision made by the Commissioner of the Department of Environmental Protection ("DEP"); or (2) an insurance claim-related decision ("Clean-up and Response Fund decision") made by the Commissioner or the Office of State Fire Marshal pursuant to 38 M.R.S. § 568-A.

Except as explained below, there are two methods available to an aggrieved person seeking to appeal a license decision made by the Commissioner or a Clean-up and Response Fund decision: (1) an administrative appeal before the Board of Environmental Protection ("Board"); or (2) a judicial appeal before Maine's Superior Court. An aggrieved person seeking review of a license decision or Clean-up and Response Fund decision made by the Board may seek judicial review in Maine's Superior Court.

An appeal of a license decision made by the DEP Commissioner or the Board regarding an application for an expedited wind energy development (35-A M.R.S. § 3451(4)), a general permit for an offshore wind energy demonstration project (38 M.R.S. § 480-HH(1)), or a general permit for a tidal energy demonstration project (38 M.R.S. § 636-A) must be taken to the Supreme Judicial Court sitting as the Law Court.

I. ADMINISTRATIVE APPEALS TO THE BOARD

LEGAL REFERENCES

A person filing an appeal with the Board should review the applicable rules and statutes, including the DEP's Chapter 2 rule, *Processing of Applications and Other Administrative Matters* (06-096 C.M.R. ch. 2); Organization and Powers, 38 M.R.S. §§ 341-D(4) and 346; and the Maine Administrative Procedure Act, 5 M.R.S. § 11001.

DEADLINE TO SUBMIT AN APPEAL TO THE BOARD

Within 30 calendar days of the date of: (1) a final license decision of the Commissioner; or (2) a Clean-up and Response Fund decision, an aggrieved person may appeal to the Board for review of that decision. "Aggrieved person" means any person whom the Board determines may suffer a particularized injury as a result of a Commissioner's license decision or a Clean-up and Response Fund decision. A complete appeal must be received by the Board no later than 5:00 p.m. on the 30th calendar day of the decision being appealed. With limited exception, untimely appeals will be dismissed.

HOW TO SUBMIT AN APPEAL TO THE BOARD

An appeal to the Board may be submitted via postal mail or electronic mail (e-mail) and must contain all signatures and required appeal contents. An electronic filing must contain the scanned original signature of the appellant(s). The appeal documents must be sent to the following address.

Chair, Board of Environmental Protection
c/o Board Clerk
17 State House Station
Augusta, ME 04333-0017
Clerk.BEP@maine.gov

The DEP may also request the submittal of the original signed paper appeal documents when the appeal is filed electronically. The risk of material not being received in a timely manner is on the sender, regardless of the method used.

At the time an appeal is filed with the Board, the appellant must send a copy of the appeal to: (1) the Commissioner of the DEP (Maine Department of Environmental Protection, 17 State House Station, Augusta, Maine 04333-0017); (2) the licensee, if the appellant is not the licensee; and (3) if a hearing was held on the application, any intervenors in that hearing proceeding. For appeals of Clean-up and Response Fund decisions made by the State Fire Marshal, the appellant must also send a copy of the appeal to the State Fire Marshal. **Please contact the Board Clerk at clerk.bep@maine.gov or DEP staff at 207-287-7688 with questions or for contact information regarding a specific license or Clean-up and Response Fund decision.**

REQUIRED APPEAL CONTENTS

A written appeal must contain the information specified in Chapter 2, section 23(B) or section 24(B), as applicable, at the time the appeal is submitted. **Please carefully review these sections of Chapter 2**, which is available online at https://www.maine.gov/sos/cec/rules/06/chaps06.htm, or contact the Board Clerk to obtain a copy of the rule. Failure to comply with the content of appeal requirements may result in the appeal being dismissed pursuant to Chapter 2, section 23(C) or section 24(C).

OTHER CONSIDERATIONS IN APPEALING A DECISION TO THE BOARD

1. *Be familiar with the administrative record.* Generally, the record on which the Board decides an appeal is limited to the record prepared by the agency in its review of the application, any supplemental evidence admitted to the record by the Board Chair and, if a hearing is held on the appeal, additional evidence admitted during the hearing. A person who seeks to appeal a decision to the Board is encouraged to contact the DEP (or State Fire Marshal for Clean-up and Response Fund decisions made by that agency) to inspect the record before filing an appeal.

2. *Be familiar with the applicable rules and laws.* An appellant is required to identify the licensing criterion or standard the appellant believes was not satisfied in issuing the decision, the bases of the objections or challenges, and the remedy sought. Prior to filing an appeal, review the decision being appealed to identify the rules and laws that are applicable to the decision. An appellant may contact the DEP or Board staff with any questions regarding the applicable rules and laws or the appeal procedure generally.

3. *The filing of an appeal does not operate as a stay to any decision.* If a license has been granted and it has been appealed, the license normally remains in effect pending the processing of the appeal. Unless a separate stay of the decision is requested and granted (*see* Chapter 2, section 23(M)), the licensee may proceed with an approved project pending the outcome of the appeal. Any activity initiated in accordance with the approved license during the pendency of the appeal comes with the risk of not knowing the outcome of the appeal, including the possibility that the decision may be reversed or modified by the Board.

4. *Alternative dispute resolution.* If the appeal participants agree to use mediation or another form of alternative dispute resolution ("ADR") to resolve the appeal and so notify the Board, the Board will not hear the matter until the conclusion of that effort, provided the participants engaged in the alternative dispute resolution demonstrate satisfactory progress toward resolving the issues. *See* Chapter 2, section 23(H) or contact the Board Executive Analyst (contact information below) for more information on the ADR provision.

WHAT TO EXPECT ONCE YOU FILE A TIMELY APPEAL WITH THE BOARD

The Board will acknowledge receipt of each appeal and develop a service list of appeal participants and any interested persons for use in the appeal proceeding. Electronic mail (e-mail) is the preferred method of communication during an appeal proceeding; however, the Board reserves the right to require paper copies of all filings. Once the Board Chair rules on the admissibility of all proposed supplemental evidence, the licensee (if the licensee is not the appellant) may respond to the merits of the appeal. Instructions specific to each appeal will be provided in correspondence from the Board Executive Analyst or Board Chair.

Generally, once all filings in an appeal proceeding are complete, the DEP staff will assemble a packet of materials for the Board (Board packet), including a staff recommendation in the form of a proposed Board Order. Once available, appeal participants will receive a copy of the Board packet and an agenda with the meeting location and start time. Once finalized, the meeting agenda will be posted on the Board's webpage https://www.maine.gov/dep/bep/index.html. Appeals will be considered based on the administrative record on appeal and oral argument at a regular meeting of the Board. *See* Chapter 2, Section 23(I). The Board may affirm all or part of the decision under appeal; affirm all or part of the decision under appeal with modifications, or new or additional conditions; order a hearing to be held as expeditiously as possible; reverse the decision under appeal; or remand the decision to the Commissioner or State Fire Marshal, as applicable, for further proceedings.

II. JUDICIAL APPEALS

The filing of an appeal with the Board is not a prerequisite for the filing of a judicial appeal. Maine law generally allows aggrieved persons to appeal final license decisions to Maine's Superior Court (*see* 38 M.R.S. § 346(1); Chapter 2; 5 M.R.S. § 11001; and M.R. Civ. P. 80C). A judicial appeal by a party to the underlying proceeding must be filed with the Superior Court within 30 days of receipt of notice of the Board's or the Commissioner's decision. For any other aggrieved person, an appeal must be filed within 40 days of the date the decision was rendered. An appeal to court of a license decision regarding an expedited wind energy development, a general permit for an offshore wind energy demonstration project, or a general permit for a tidal energy demonstration project may only be taken directly to the Maine Supreme Judicial Court. *See* 38 M.R.S. § 346(4), the Maine Administrative Procedure Act, statutes governing a particular license decision, and the Maine Rules of Civil Procedure for substantive and procedural details applicable to judicial appeals.

ADDITIONAL INFORMATION

If you have questions or need additional information on the appeal procedure, for administrative appeals contact the Board Clerk at clerk.bep@maine.gov or 207-287-2811 or the Board Executive Analyst at bill.hinkel@maine.gov or 207-314-1458, or for judicial appeals contact the court clerk's office in which the appeal will be filed.

Note: This information sheet, in conjunction with a review of the statutory and rule provisions referred to herein, is provided to help a person to understand their rights and obligations in filing an administrative or judicial appeal, and to comply with notice requirements of the Maine Administrative Procedure Act, 5 M.R.S. § 9061. This information sheet is not intended to supplant the parties' obligations to review and comply with all statutes and rules applicable to an appeal and insofar as there is any inconsistency between the information in this document and the applicable statutes and rules, the relevant statutes and rules apply.

MEMO

TO:	Biddeford Planning Board
FROM:	UNE Pier Review, an informal collaboration of Biddeford & Saco residents
PRESENTED BY:	Kyle Noble, Biddeford resident and former City Councilor
DATE:	May 13, 2025
RE:	UNE's pier application to the Biddeford Planning Board

Executive Summary

UNE must prove the truth of their public statements about inadequate water depth at a suggested alternative location, a location they do not prefer. Without doing so, their application to the Biddeford Planning Board is incomplete.

Brief descriptions of Exhibits

1. Exhibit A --- Technical chart (unedited), submitted by GEI (UNE's paid consultant) to regulatory authorities.
2. Exhibit B --- A drone photo taken from 355 feet in the air.
3. Exhibit C --- The same drone photo, but with information superimposed.
4. Exhibit D --- The technical chart submitted by GEI, but with information superimposed.
5. Exhibit E --- A three-page PDF of a NOAA chart, Page 1 unedited, Pages 2 & 3 contain superimposed information.
6. Exhibit F --- A video of the former Saco Harbormaster, accompanied by a newspaper reporter, taking depth soundings along the shoreline of the Saco River. The location of the soundings is where UNE's attorney has alleged that water depth is insufficient to dock a 60-foot research vessel. A thumb drive with this video has been supplied to Biddeford's City Planner.

Introduction

Water depth at two spots on the Saco River is a central question in UNE's application to the Biddeford Planning Board for a new pier. In fact, there may be no more important issue. The disagreement about water depth at a suggested alternative location is perhaps *the* principal reason why City Staff deprived the Planning Board of the expertise that normally would have been provided by the Harbormaster or the Assistant Harbormaster.

The Harbormaster's contention that better water depth exists in a location other than what UNE wants led the University of New England to publicly mock local expertise. Their lawyer told the City Solicitor that the Harbormaster's suggestion for deeper water "makes no sense." From there they alleged bias, and on that basis the Harbormaster was muzzled.

Therefore, by using statements about inadequate water depth to exclude local expertise, UNE now must prove that those statements are *true*. If they fail to do so, the Planning Board doesn't have enough information to approve the application.

Legal intimidation to discourage factual review

In 2024, while threatening in to sue the City of Biddeford, UNE's attorney wrote that the Planning Board had previously "voted unanimously to approve UNE's Master Plan." He used this routine procedural checkpoint to conclude, "In other words, the location of the pier is a settled matter." (Letter to city attorney, Feb. 13, 2024)

The chairman of the Board at that time has confirmed that no detailed discussion of UNE's proposed pier location took place then, in 2016. It's his opinion that approval of a master plan simply confers a blessing on general concepts, not specific engineering proposals. That is normal procedure, giving the applicant a chance to outline a general plan early in the process, and giving the Board a chance to provide feedback early in the process. UNE's legal argument is that approval of a master plan nine years ago is an acceptable substitute for thorough review of pier location in the current proposal. That might be useful in threatening a lawsuit, but outside of that context it's absurd.

UNE didn't submit an application to the Planning Department until April of 2025. *This* Planning Board, the one currently seated, is the body that reviews the application. The university's threats to sue the City, if the pier location exactly as submitted is not approved, are inappropriate.

UNE's false claim

UNE participated in the process that led to a charge of bias against a City official and the exclusion of local expertise --- the outcome the university wanted. To help secure that result, UNE made a claim about inadequate water depth that is unambiguous, in letters to the City of Biddeford and as quoted in newspaper articles:

- "A pier hugging the shoreline would not reach deep enough water." (Portland Press Herald)
- A pier in the suggested alternative location "...would sit in water too shallow to use." (Letter to City)
- A pier in the suggested alternative location wouldn't work "given the depth of the water..." (Letter to City)
- "Our position is that the planned location of the GMSC Pier is a settled issue." (Letter to City)
- "We take the position that the GMSC Pier's location has already been approved and that any denial of the pier at Site 7 will be an illegal act." (Letter to City)
- The suggested alternative location "...makes no sense." (Letter to City)

As those statements make clear, UNE wants the Board to approve their preferred location as proposed, no questions asked. They expect you and Biddeford residents to believe --- without proof --- that those statements about inadequate water depth are true.

UNE engineer contradicts client

GEI is the engineering firm that will explain details of the application to the Board. On Nov. 28, 2023, GEI revealed in a memo that UNE's repeated claims about inadequate water depth at the suggested alternative location are flat-out wrong: *"The suggested alternative location does have greater depth at the main berth, approximately 11 to 12 feet at MLLW."*

It has to be one or the other. Either UNE is correct that a dock at the alternate location would "sit in water that is too shallow to use," or GEI is correct that plenty of deep water exists at the suggested alternative location.

Measurements prove GEI correct, UNE's statements false

In February of 2025, concerned parties consulted separately with two licensed civil engineers who don't work for GEI, used their guidance, and deployed to the site to take physical measurements and drone photographs. The measurements took place on Wednesday, Feb. 26, 2025, a day on which Mean Low Tide occurred at 4:01 p.m.

SHEET NO. B-001 (**Exhibit A**), a technical drawing produced by GEI for UNE and submitted to regulatory agencies, guided the taking of all measurements.

In the middle of SHEET NO. B-001, you can see that GEI drew a red line denoting MLLW in a NE direction, around "LEDGE," then for a very short distance in a SE direction, and then in an ENE direction before bathymetric gradient lines approaching the mouth of the river are discontinued.

Our team's first step was to consult with the non-GEI civil engineers, and to reach the conclusion that SHEET NO. B-001 is accurate. The next step was to deploy into the field to place a bright orange marker on the ledge. Next, using the scaling information provided on SHEET NO. B-001, to proceed along the bathymetric gradient line marked "0" by GEI, the mean low tide line. Along that line our team placed bright orange markers at 20-foot intervals.

The drone pilot then launched his camera to take a high resolution photo (**Exhibit B**) from approximately 355 feet up in the air. The photo was taken at precisely 3:37:10 p.m. on February 26, 2025, about 14 minutes before low tide. The drone photo (**Exhibit B**) is of a general area, an area that those who know the river very well have suggested has more than enough deep water to meet UNE's needs. Note the exceptional clarity of the photograph.

Photos don't lie

In **Exhibit C**, the alternative location that UNE does not want discussed is superimposed on the original drone photograph and labeled as "The Forbidden Zone." It's an area that measures approximately 190 feet by 20 feet. You can see the orange markers at 20-foot intervals along the "0-value" bathymetric gradient line, and a superimposed yellow line marking the Low Tide Line that day. A very striking element of this photograph is the very dark green area just a few footsteps to the north of the low tide line, with the dark green color clearly indicating deep water. You can't miss it.

Please refer back to SHEET NO. B-001 (**Exhibit A**). Just a few feet to the north of the "0" gradient line is the "-10" gradient line, indicating 10 feet of water at a very low tide. With stunning definition, the drone photograph and dark green area prove that there is ample deep water just a few feet away from the low tide line, and that GEI's SHEET NO. B-001 (**Exhibit A**) is accurate. Everything the UNE attorney has been claiming about inadequate water depth close to shore, in that location, is wrong. He has failed to discredit local expertise.

GEI accurately charts "smoking gun" depth marker

After taking the drone photograph and superimposing markings to define the zone that local experts have been forbidden to speak about, our team asked one of the non-GEI engineers to accurately superimpose the Forbidden Zone onto GEI's drawing, SHEET NO. B-001. This is **Exhibit D**. Please observe the "-10" gradient line, labeled as the Smoking Gun. This denotes 10 feet of water at Mean Low Tide, just a few feet from shore. The significance of the -10 gradient line is that once again GEI's own work, based on bathymetric surveys and confirmed by two other civil engineers, proves that ample depth does exist close to shore, *exactly* what local experts have been saying for more than a decade.

Further, SHEET NO. B-001 indicates approximately 2,660 sq. feet in total required for fixed and floating dock surfaces, as proposed by UNE. In **Exhibit D**, the "Forbidden Zone" at the suggested alternative location is 20 feet by 190 feet, approaching almost 4,000 sq. feet. That is ample room in which to design an adequate pier and docking system to meet research needs, a system that does not interfere with other mariners.

NOAA data doesn't lie

Supporting the GEI statement, GEI diagrams, and the drone photograph, and also directly contradicting UNE's attorney, is a chart produced by the Office of Coast Survey, a division of the National Oceanic and Atmospheric Administration (NOAA). The attached 3-page PDF, **Exhibit E**, clearly shows deep water swinging in very close to shore, at the proposed alternative location.

Depth finders don't lie

Saco's former Harbormaster (Dan Chadbourne) was also forbidden by his city manager from making any public comment about the suggested alternative location revealed in the drone photograph. Mr. Chadbourne served as Saco's Harbormaster for more than twenty years, and has a Master's License from the United States Coast Guard. (None of GEI's personnel hold that credential.) On October 25, 2024 a newspaper reporter accompanied Mr. Chadbourne as he took depth soundings in the Forbidden Zone. His findings confirm exactly what's seen in the drone photograph --- deep water --- and you can watch him calling out actual depth soundings in this video: https://youtu.be/gtwhDOmZTI4. We have submitted the video file on a thumb drive to Biddeford's City Planner as **Exhibit F**.

Further on-site investigation required

SHEET NO. B-001 is accurate, the Saco Harbormaster's depth soundings are accurate, the drone photograph is accurate, the NOAA chart is accurate, the Biddeford Harbormaster's observations about deep water have been accurate, and GEI was accurate when it wrote, *"The suggested alternative location does have greater depth at the main berth."* Unfortunately, 100% inaccurate are UNE's statements, part of the public record, that the suggested alternate location makes no sense because deep enough water close to shore does not exist.

Of grave concern is that the Board is presently handicapped by a glaring information deficit. You don't have what you need to approve the application that is in front of you. The silencing of the Harbormaster is history, and nothing can be done about that. Nevertheless, it's clear the city manager knew that as the Board does its work, it *still needs to be properly advised* by a professional with local knowledge. On May

22, 2024, he wrote: "*I will soon announce the appointment of a special 'Harbormaster Pro Tem' for the sole purpose of hearing and deciding on the anticipated application.*"

He never made any such appointment. Therefore, the application in its present form has never been professionally evaluated by someone who has deep and thorough knowledge of that part of the Saco River. UNE is demanding that the Board approve its application while deprived of the invaluable contribution of local expertise.

Conclusion

UNE is an asset to the City of Biddeford. Local residents have been unified in stating that UNE should have a new research pier to support their marine sciences center. Our memo is not an effort to prevent UNE from having a much-needed research pier. Nor are we even remotely attempting to design what UNE's pier "should" look like.

What we *are* asking is that the pier be built in the right place. That's why we hope for proper regulatory process from local officials, because state and federal regulatory agencies have utterly failed to ask the right questions. Important expertise has been forcibly excluded from the discussion. Now, very late in the game, only the Biddeford Planning Board can insist upon an open and transparent process that requires the scientific data necessary to site the pier in the best possible location.

One thing is obvious. Until UNE supplies data proving the truth of its statements about inadequate water depth at the suggested alternative location, the application remains incomplete.

EXHIBIT A

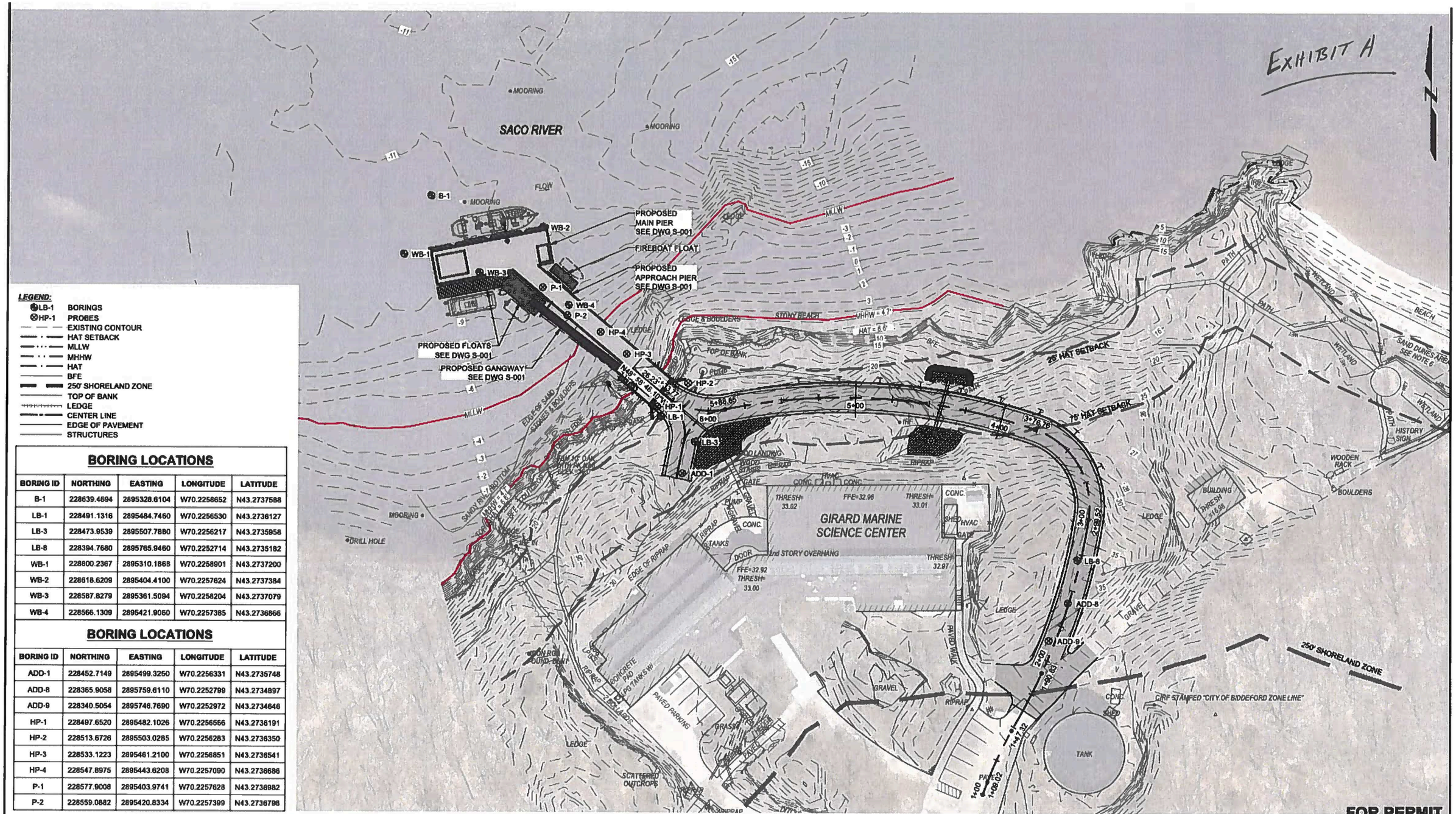

LEGEND:

- LB-1 BORINGS
- HP-1 PROBES
- EXISTING CONTOUR
- HAT SETBACK
- MLLW
- MHHW
- HAT
- BFE
- 250' SHORELAND ZONE
- TOP OF BANK
- LEDGE
- CENTER LINE
- EDGE OF PAVEMENT
- STRUCTURES

BORING LOCATIONS

BORING ID	NORTHING	EASTING	LONGITUDE	LATITUDE
B-1	228639.4694	2895328.6104	W70.2258652	N43.2737588
LB-1	228491.1316	2895484.7460	W70.2256530	N43.2736127
LB-3	228473.9539	2895507.7880	W70.2256217	N43.2735958
LB-8	228394.7680	2895765.9460	W70.2252714	N43.2735182
WB-1	228600.2367	2895310.1868	W70.2258901	N43.2737200
WB-2	228618.6209	2895404.4100	W70.2257624	N43.2737384
WB-3	228587.8279	2895361.5094	W70.2258204	N43.2737079
WB-4	228566.1309	2895421.9060	W70.2257385	N43.2736866

BORING LOCATIONS

BORING ID	NORTHING	EASTING	LONGITUDE	LATITUDE
ADD-1	228452.7149	2895499.3250	W70.2256331	N43.2735748
ADD-8	228365.9058	2895759.6110	W70.2252799	N43.2734897
ADD-9	228340.5054	2895746.7690	W70.2252972	N43.2734646
HP-1	228497.6520	2895482.1026	W70.2256566	N43.2736191
HP-2	228513.6726	2895503.0285	W70.2256283	N43.2736350
HP-3	228533.1223	2895461.2100	W70.2256851	N43.2736541
HP-4	228547.8975	2895443.6208	W70.2257090	N43.2736686
P-1	228577.9008	2895403.9741	W70.2257628	N43.2736982
P-2	228559.0882	2895420.8334	W70.2257399	N43.2736798

ELEVATION	MLLW	NAVD88*
BFE	+19.0	+14.0
HAT	+11.6	+6.6
MHHW	+9.7	+4.7
MHW	+9.3	+4.3
MSL	+4.8	-0.2
MLW	+0.3	-4.7
MLLW	0.0	-5.0

*PROJECT DATUM

0 30 60
SCALE, FEET

Attention:
0 1"
If this scale bar does not measure 1" then drawing is not original scale.

STATE OF MAINE DANIEL J. BARRON
April 22, 2024

Designed:	DJB
Drawn:	JAM
Checked:	BJB
Approved:	BMM
P.E. No:	13033
GEI Project	2203703

GEI Consultants
GEI CONSULTANTS, INC
5 BALK STREET
PORTLAND, ME 04101
(207)797 8901

UNE
UNIVERSITY OF NEW ENGLAND
11 HILLS BEACH RD.
BIDDEFORD, MAINE

UNIVERSITY OF NEW ENGLAND
MARINE SCIENCE CENTER PIER
11 HILLS BEACH ROAD
BIDDEFORD, YORK COUNTY, MAINE

NO	DATE	ISSUE/REVISION	APP
4	9/14/2023	DEP PERMIT SET	DJB
3	6/28/2023	75% DESIGN SUBMISSION	DJB
2	2/15/2023	30% DESIGN SUBMISSION	DJB
1	12/9/2022	15% DESIGN SUBMISSIONREV	DJB
0	11/11/2022	15% DESIGN SUBMISSION	DJB

SHEET NAME: **BORING LOCATION PLAN**

SHEET NO.: **B-001**

FOR PERMIT

EXHIBIT B



EXHIBIT C


0'
100'
DATE-TIME: 02/26/2025 - 03:47:10 PM
MLT (Mean Low Tide) @ 4:01 PM
FORBIDDEN ZONE
LOW TIDE LINE

EXHIBIT D

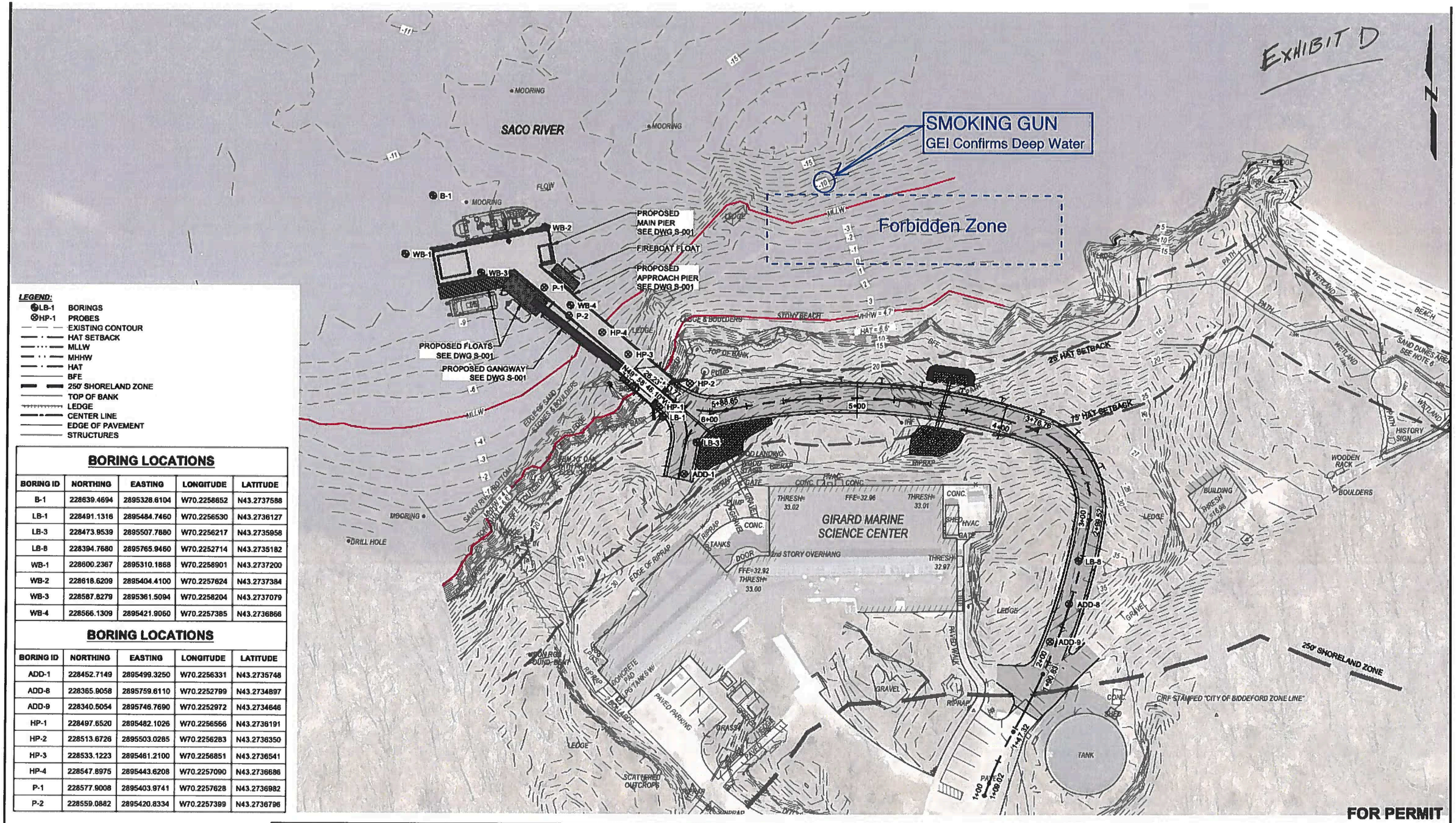

LEGEND:

- LB-1 BORINGS
- HP-1 PROBES
- EXISTING CONTOUR
- HAT SETBACK
- MLLW
- MHHW
- HAT
- BFE
- 250' SHORELAND ZONE
- TOP OF BANK
- LEDGE
- CENTER LINE
- EDGE OF PAVEMENT
- STRUCTURES

BORING LOCATIONS

BORING ID	NORTHING	EASTING	LONGITUDE	LATITUDE
B-1	228639.4694	2895328.6104	W70.2258652	N43.2737588
LB-1	228491.1316	2895484.7460	W70.2256530	N43.2736127
LB-3	228473.9539	2895507.7880	W70.2256217	N43.2735958
LB-8	228394.7680	2895765.9460	W70.2252714	N43.2735182
WB-1	228600.2367	2895310.1868	W70.2258901	N43.2737200
WB-2	228618.6209	2895404.4100	W70.2257624	N43.2737384
WB-3	228587.8279	2895361.5094	W70.2258204	N43.2737079
WB-4	228566.1309	2895421.9060	W70.2257385	N43.2736866

BORING LOCATIONS

BORING ID	NORTHING	EASTING	LONGITUDE	LATITUDE
ADD-1	228452.7149	2895499.3250	W70.2256331	N43.2735748
ADD-8	228365.9058	2895759.6110	W70.2252799	N43.2734897
ADD-9	228340.5054	2895746.7690	W70.2252972	N43.2734648
HP-1	228497.6520	2895482.1026	W70.2256566	N43.2736191
HP-2	228513.6726	2895503.0265	W70.2256283	N43.2736350
HP-3	228533.1223	2895461.2100	W70.2256851	N43.2736541
HP-4	228547.8975	2895443.6208	W70.2257090	N43.2736686
P-1	228577.9008	2895403.9741	W70.2257628	N43.2736982
P-2	228559.0882	2895420.8334	W70.2257399	N43.2736796

ELEVATION	MLLW	NAVD88*
BFE	+19.0	+14.0
HAT	+11.6	+6.6
MHHW	+9.7	+4.7
MHW	+9.3	+4.3
MSL	+4.8	-0.2
MLW	+0.3	-4.7
MLLW	0.0	-5.0

*PROJECT DATUM

0 30 60
SCALE, FEET

Attention:
0 1"
If this scale bar does not measure 1" then drawing is not original scale.

STATE OF MAINE DANIEL J. BANNON
April 22, 2024

Designed:	DJB
Drawn:	JAM
Checked:	BJB
Approved:	BMM
P.E. No:	13033
GEI Project	2203703

GEI Consultants
GEI CONSULTANTS, INC
5 MILK STREET
PORTLAND, ME 04101
(207) 797 8901

UNE
UNIVERSITY OF NEW ENGLAND
11 HILLS BEACH RD.
BIDDEFORD, MAINE

UNIVERSITY OF NEW ENGLAND MARINE SCIENCE CENTER PIER
11 HILLS BEACH ROAD
BIDDEFORD, YORK COUNTY, MAINE

NO	DATE	ISSUE/REVISION	APP
4	9/14/2023	DEP PERMIT SET	DJB
3	6/28/2023	75% DESIGN SUBMISSION	DJB
2	2/15/2023	30% DESIGN SUBMISSION	DJB
1	12/9/2022	15% DESIGN SUBMISSIONREV	DJB
0	11/11/2022	15% DESIGN SUBMISSION	DJB

SHEET NAME: BORING LOCATION PLAN

SHEET NO.: B-001

Office of Coast Survey
National Oceanic and Atmospheric Administration
U.S. Department of Commerce

NOAA Custom Chart Version 3.0
Choose your own chart scale and location
Save charts to a personal chart catalog

EXHIBIT E.1

Help & Feedback

Guides | Feedback | What's New

Use these links to open the two-page Quick Start Guide or the detailed-instructions in the User Guide. U.S. Chart No. 1 describes the meaning of symbols used on nautical charts.

- Quick Start Guide
- User Guide
- "Using NOAA Custom Chart" Video Transcript
- "Updating Custom Charts" Video Transcript
- Legend (U.S. Chart No. 1)
- NOAA Custom Chart PDF Printing

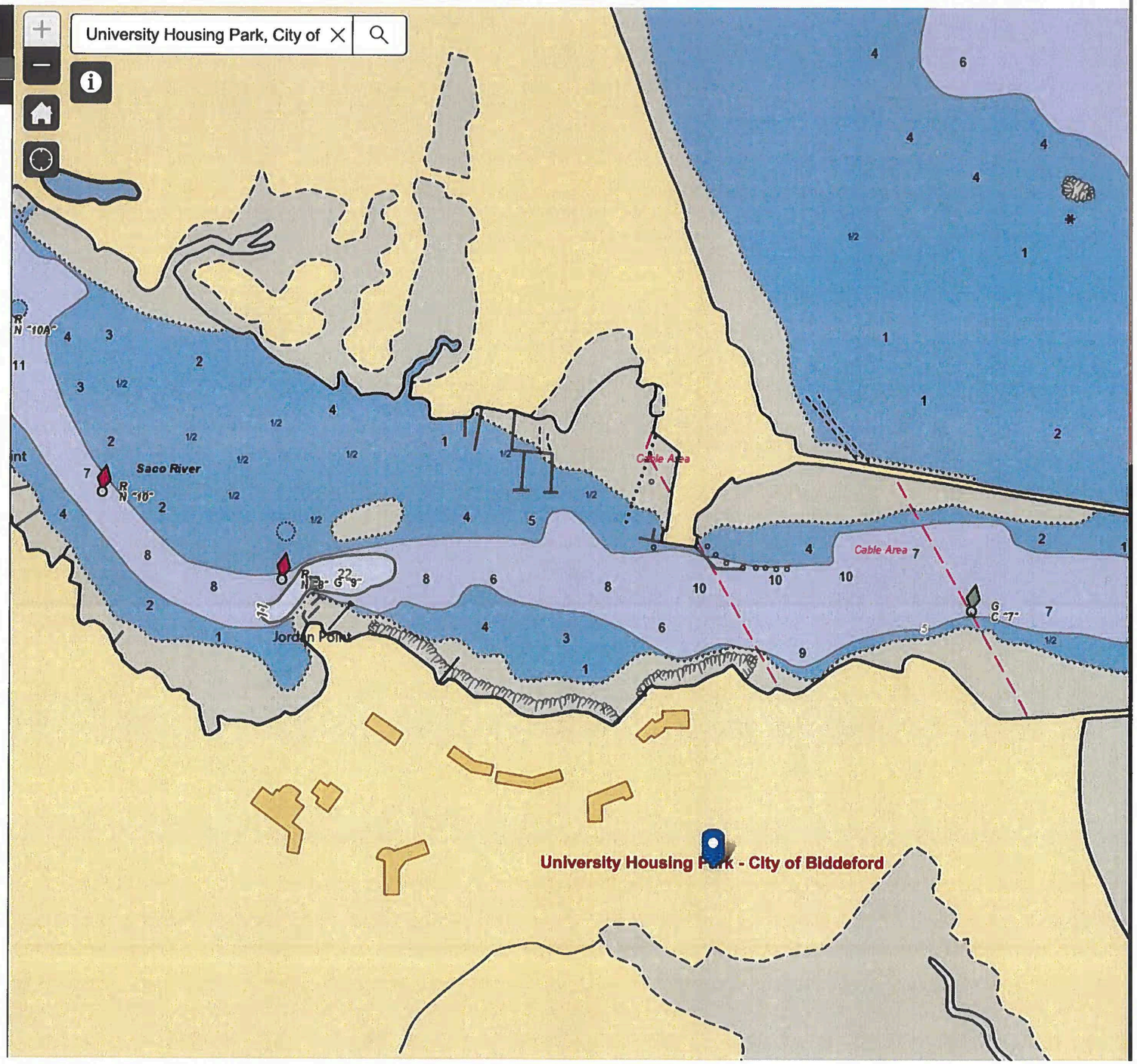

EXHIBIT E.2

General Vicinity

- UNE proposed location
- Suggested alternative location

See Next Page

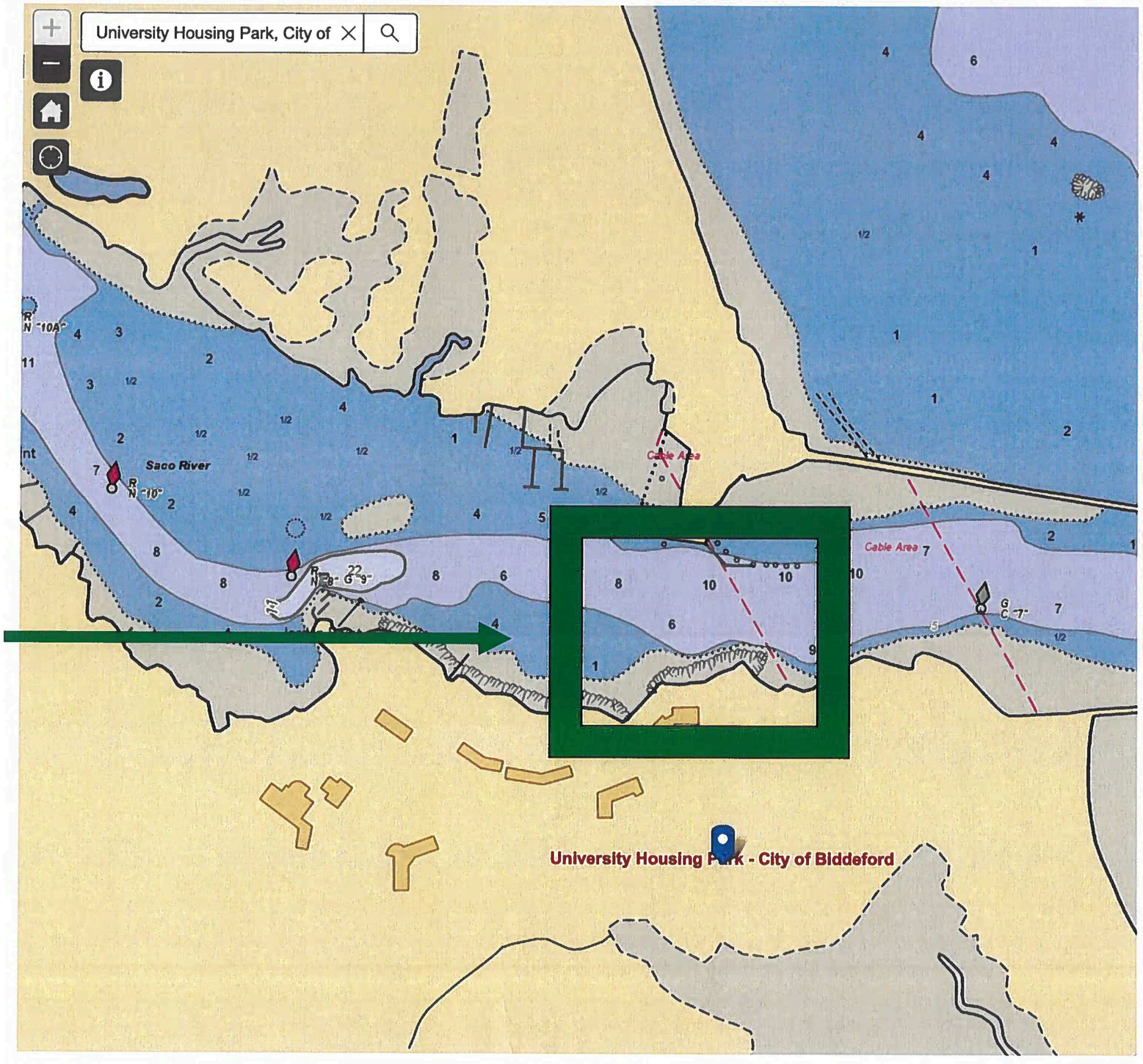

EXHIBIT E.3

Deep Water

Shallow Water

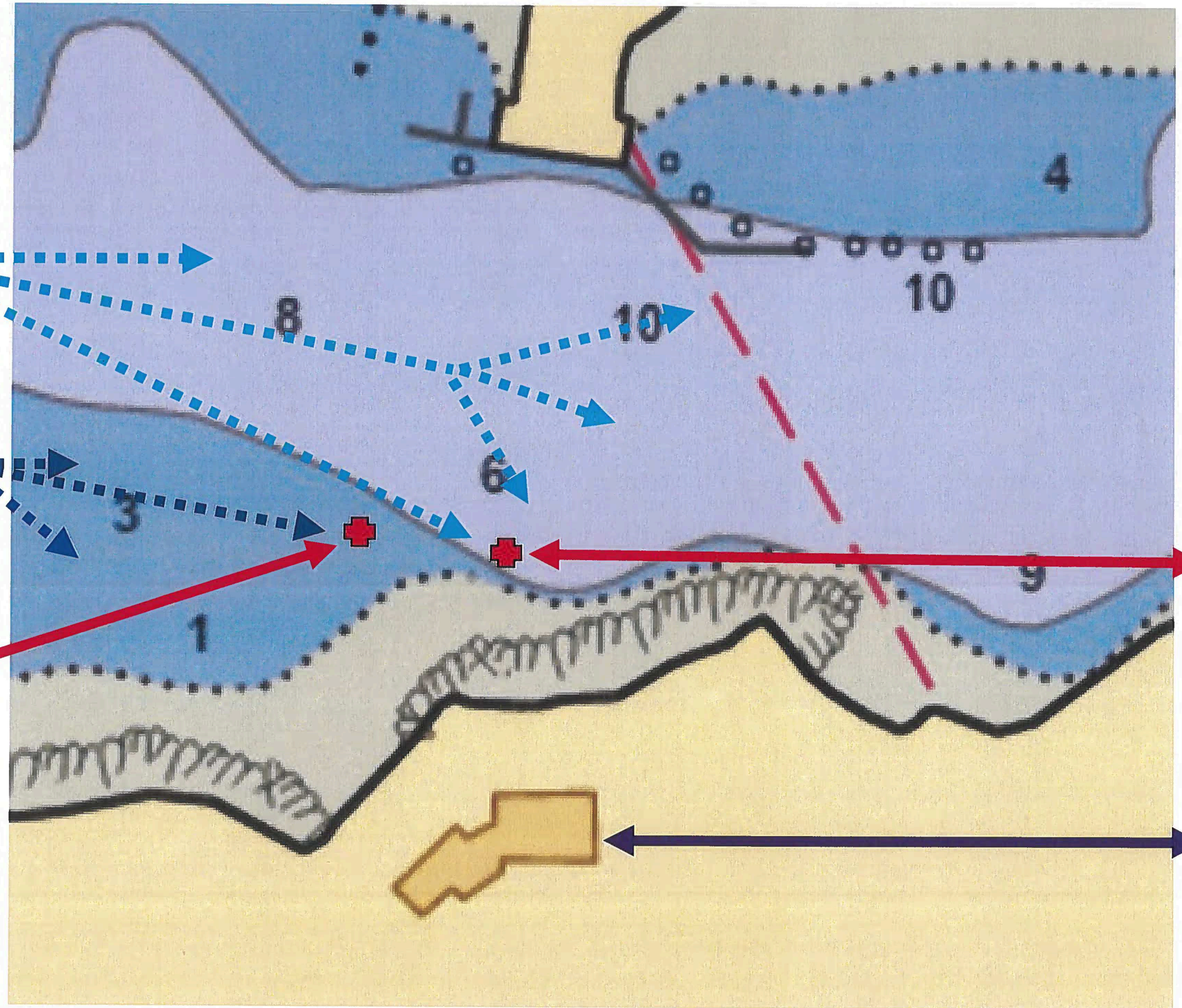

UNE's proposed location, DOCK at end of pier

(At least one private mooring displaced, possibly several more. Impact of maneuvering 60-foot vessel is undocumented.)

Suggested alternative location, DOCK at end of pier

(Minimal or no impact to mooring field. Impact of maneuvering 60-foot vessel is undocumented.)

UNE's existing marine science research center

Letter of Concern and Inquiry

ATTN: Biddeford Planning Board / City of Biddeford

Subject: University of New England (UNE) Pier proposal

Date: 14 May 2025

Dear members of the planning board and any person or party representing the interests of the City of Biddeford,

It is my understanding that the following two statements are true: First, UNE has submitted an application to build a pier in a location that is currently in use by commercial fisherman for the purposes of mooring their vessels. Second, the Biddeford Planning Board intends to meet at 6:00 PM on 21 May 2025 regarding this application. As a mooring holder (#72), payments current and in good standing, I have some concerns and inquiries that I would like to bring to the attention of the board. The following is a list of concerns or inquiries that I share with other citizens of Biddeford and the surrounding areas that are impacted by this proposal:

1) A decision of this magnitude should not be taken lightly as it involves public areas that are considered property of the City of Biddeford, State of Maine, and the public at large. The decision to divest any property, land space, or access to navigable waters from the City to another entity is a decision that belongs to the citizens of Biddeford, the citizens of the local area, and the public at large. To my knowledge, none of these parties have been notified of this decision or voted on this issue as of the date of this letter.

2) A decision of this nature is permanent and is highly unlikely to be reversed or modified in the future, thus the importance of involving all interested stakeholders in the decision.

3) Has the planning board and all responsible parties conducted a comprehensive analysis of the proposed location and any alternate locations as a part of their decision?

4) Has the planning board and all responsible parties considered alternate locations for the pier that would be suitable for its intended operation and use and not change any current mooring locations?

5) What does the planning board and all responsible parties intend to do about the moorings that will be affected if the proposal is accepted as written?

I humbly ask that you carefully consider the magnitude of this decision and how it impacts the people of our community. On a personal level, I spent 20+ years in the U.S. Army so that one day I could pursue my "American Dream." I wanted to be a commercial fisherman, support our veterans, and contribute to my community. I have worked very hard my entire life, putting others needs before my own and sacrificing so that one day I could live my American Dream. I went to the Landing School to learn how work on boats, gave back to my community by serving as an Ed-Tech in the Biddeford School System, and have taken those that are terminally ill on their last fishing trip. I continue to serve my community in other ways after my military service. I am asking you to consider people like me that live and work in our community and I hope this letter is received with sincere empathy and compassion for the same.

Respectfully,

Ed McCaskey
ateasefishing@gmail.com
207-284-3168

Letter of Notice

To the Biddeford City Planning Board
Wednesday, May 21, 2025

We The Undersigned are mooring owners on the Biddeford side of the lower Saco River, either directly on, or in very close proximity to, the physical site proposed by the University of New England (UNE) for their new marine sciences research pier. We are joined in this Letter of Notice by the former Harbormaster of Saco, Maine, who holds a Master's License from the United States Coast Guard. We are in solidarity with each other in regard to this obvious conclusion:

UNE has proposed a location for its pier that is unavailable. And therefore the Planning Board's hands are tied --- you are unable to approve their application.

Explanation

Several of us have already written to regulatory authorities stating quite plainly that we have no intention of moving our moorings. Those moorings are personal property. Commercial moorings can even be assigned in estate documents to our heirs. As long as we pay our mooring fees and operate responsibly on the river, our property cannot be seized.

The Harbormaster is no longer part of Biddeford's review of the UNE application. Therefore, only the Planning Board and the Biddeford City Council have any remaining authority. For the Planning Board to approve UNE's application, it would first need to know that the location UNE has proposed for its pier is available. That requires the Council to consider and pass a motion that directs the Harbormaster to seize the personal property of the Undersigned. Or perhaps vote to begin eminent domain proceedings.

If the City orders the Harbormaster to seize our property, we believe the Harbormaster may refuse the order. If the City moves to fire the Harbormaster because he refuses such an order, litigation is possible. If the Council directs City Staff to somehow bypass the Harbormaster and try to seize any mooring, litigation is certain. If UNE sues Biddeford, seeking to force the City to seize the personal property of the Undersigned, a complex and multi-year legal saga will begin.

Biddeford cannot afford the expense of a tortuous, years-long legal battle with mooring holders that it's very likely to lose. Nor has UNE explained to the Planning Board how it plans to forcibly remove the current mooring owners.

In its application UNE merely writes, "*To address impacts to moorings, GEI and UNE are prepared to work with City staff as necessary to allow for mooring adjustments to accommodate the proposed pier.*" That sentence is meaningless. UNE has no signed agreement with mooring owners. *It's not going to get a signed agreement with mooring owners.* To repeat, we're not moving. Therefore, UNE has proposed building a pier in a location that is unavailable. Their application is incomplete.

Through no fault of its own, the Biddeford Planning Board is unable to approve UNE's application as currently submitted.

Mooring #: 12 THOMAS J. HATCH

Mooring #: 150 Robert Brackett

Mooring #: 138 Gregg McPherson

Mooring #: 48 William Mitchell

Mooring #: 126 CAPT SHAWN TIBBETT

Mooring #: 46 Michael RAMONDO

Mooring #: 248 Steven L Goebel

Dan Chadbourne
Former Harbormaster, Saco, ME

CITY OF BIDDEFORD

Planning and Development Department

David C.M. Galbraith
Deputy Director/City Planner
205 Main Street
P.O. Box 586
Biddeford, ME 04005
(207) 284-9115
David.Galbraith@biddefordmaine.org

PLANNING BOARD STAFF REPORT

TO: Chair Plotkin and Members of the Biddeford Planning Board

FROM: David C.M. Galbraith, Deputy Director/City Planner

DATE: June 6, 2025

RE: 2024.34 Preliminary Plan – Site Plan and Shoreland Zoning Review for the University of New England (UNE) / Proposed Construction of a Marine Science Center Research Pier to be located at 11 Hills Beach Road (Map #52, Lot 4) located in the City's Institutional (IN) Zoning District.

MEETING DATE: June 18, 2025, at 6:00 PM

---

1. INTRODUCTION

Tom Saucier, PE of Site Design Associates, is representing the University of New England (UNE) who is applying for Preliminary Site Plan Review within the Shoreland Zoning District. The University of New England (UNE) proposes to construct a new pier on the Saco River adjacent to the Girard Marine Science Center (GMSC) to support research and educational programming. The project has been in development for more than 10 years and has gone through extensive planning and alternatives analysis in arriving at the design that is being proposed.

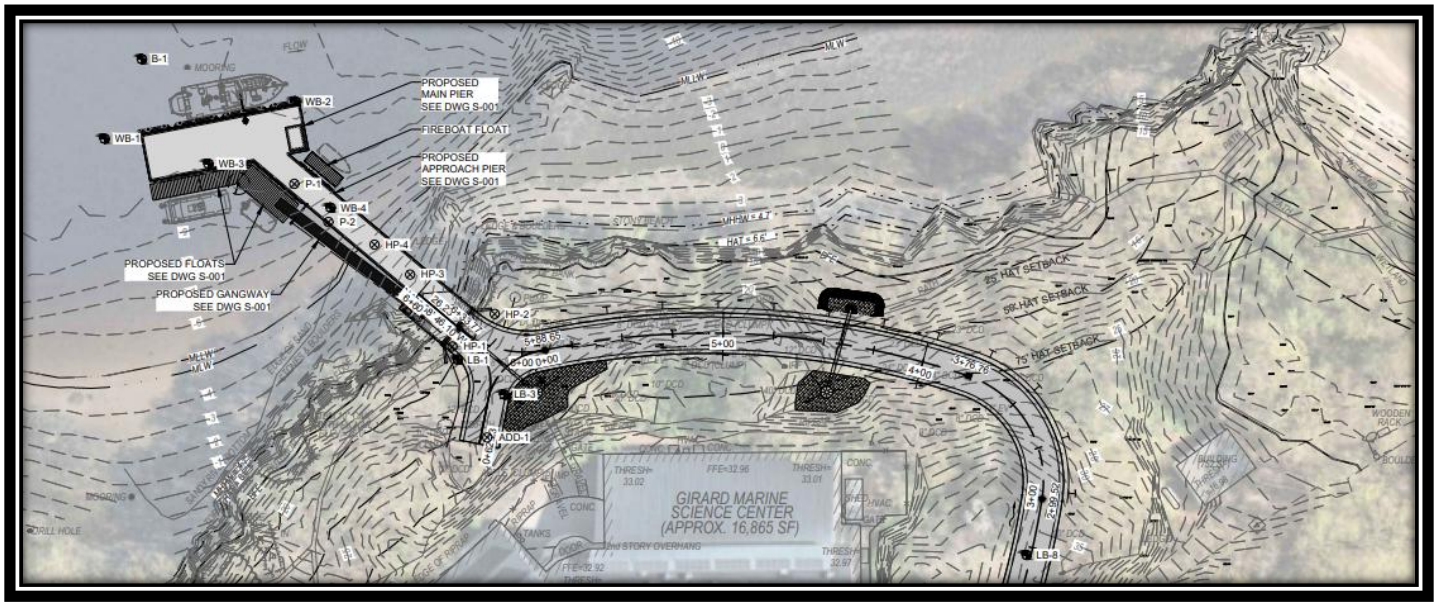

Proposed Marine Science Center Research Pier

RE: Case # 2024.34 Preliminary Plan – Site Plan and Shoreland Zoning Review for the University of New England (UNE) / Proposed Construction of a Marine Science Center Research Pier to be located at 11 Hills Beach Road (Map #52, Lot 4) located in the City's Institutional (IN) Zoning District.

MEETING DATE: June 18, 2025, at 6:00 PM

It should be noted that the Planning Department received the formal application for this project on April 16, 2025. However, the case # that was assigned to this project was in 2024 (Case # 2024.34) as that is when the Planning Department started receiving comments from the public on this application (prior to application submittal), and Staff wanted to make certain that any and all correspondence related to this matter be saved within the public record for complete transparency. These submitted emails / letters were forwarded to the Planning Board and the University New England and have been maintained by the Planning Department.

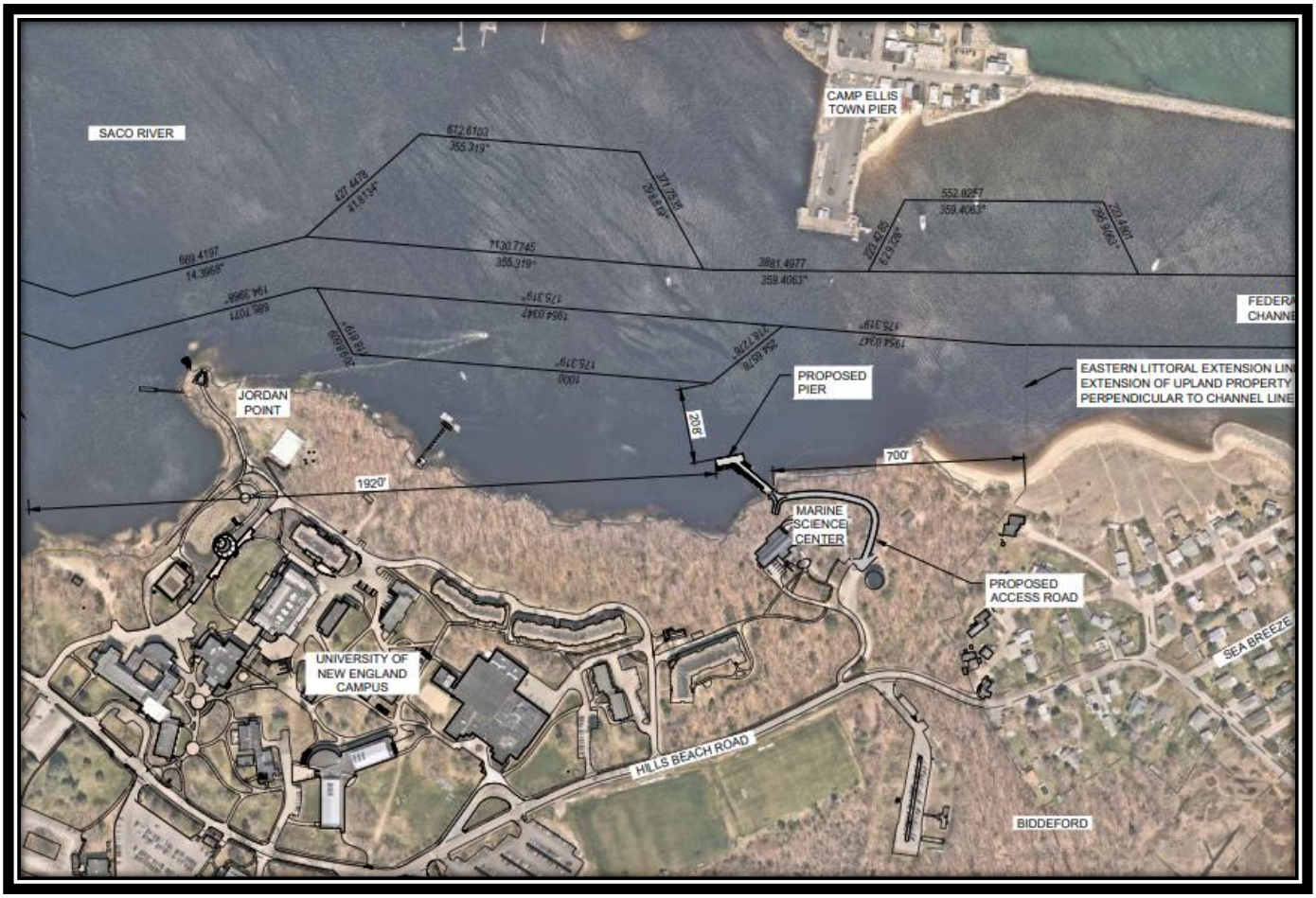

University of New England (UNE) – proposed Marine Science Center Research Pier

The University of New England (UNE) campus is located along the Saco River in Biddeford, ME. The Marine Science Center is located on the waterfront at the easterly end of campus approximately opposite Camp Ellis in Saco. To support MSC research activities, UNE proposes to construct a pier from the shore adjacent to the MSC into the Saco River to provide an all-tide access facility for small and shallow draft vessels (skiffs, landing craft, up to approximately 3-foot draft), with tidally-restricted access for larger vessels.

RE: Case # 2024.34 Preliminary Plan – Site Plan and Shoreland Zoning Review for the University of New England (UNE) / Proposed Construction of a Marine Science Center Research Pier to be located at 11 Hills Beach Road (Map #52, Lot 4) located in the City's Institutional (IN) Zoning District.

MEETING DATE: June 18, 2025, at 6:00 PM

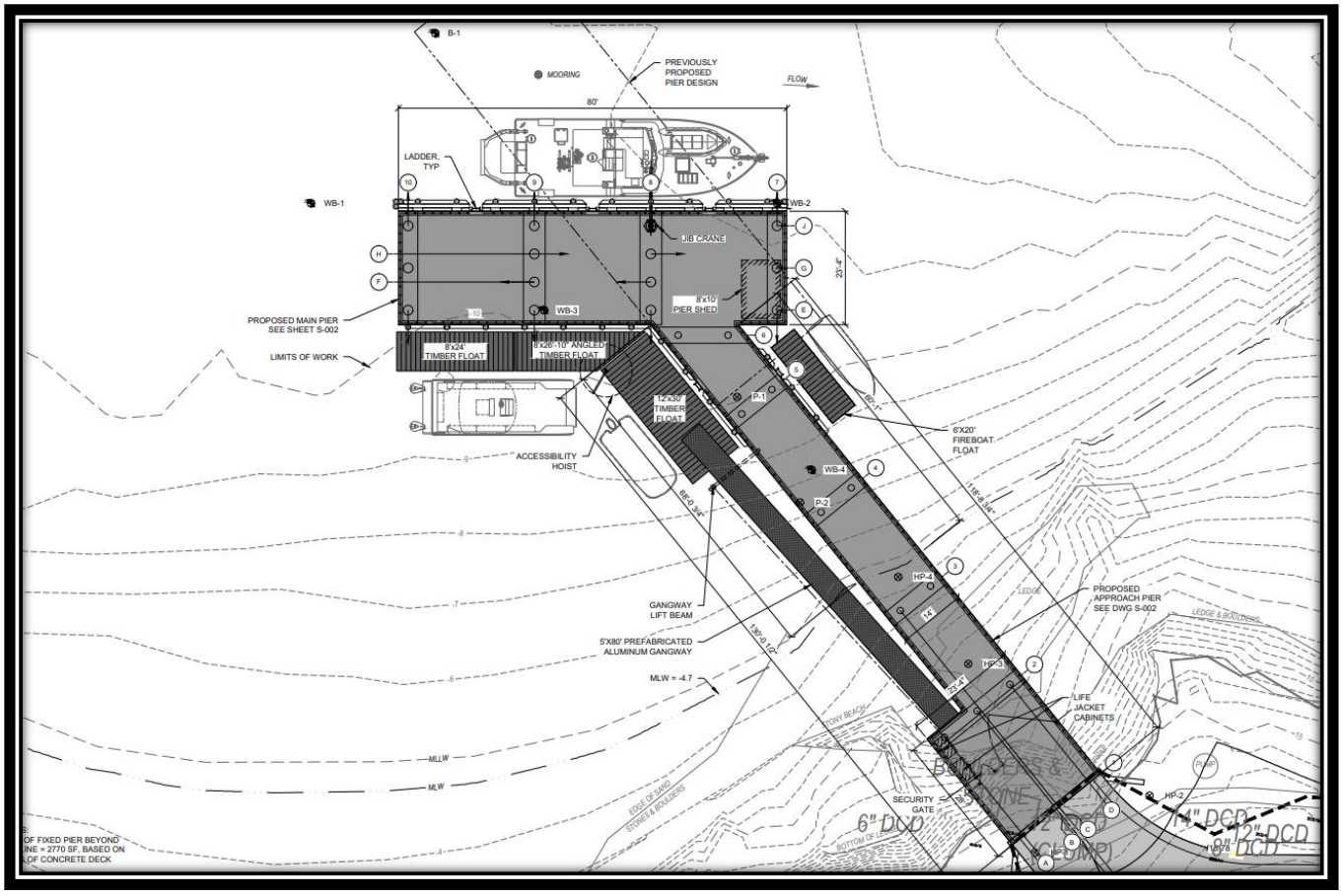

Marine Science Center Research Pier Detail

The proposed facility includes the following:

1. A pile supported pier structure extending from shore into the Saco River. The proposed pier includes an approximately 130-foot-long approach section extending from shore and an 80-foot-long pier head section oriented roughly parallel to the direction of flow in the river. The pier consists of a concrete superstructure on steel pipe piles, with timber fender piles for vessel berthing and floating docks, and a pile supported gangway lifting beam to allow the gangway ramp to be temporarily removed from the water. Site 7 (Preferred) Stormwater Management Report UNE Marine Science Center Pier September 2023, Revision B. April 2025 GEI Consultants, Inc.

2. A floating dock system consisting of one 8-foot by 24-foot float, one 8-foot by 26- foot 10-inch float, and one 12-foot by 30-foot gangway landing float to provide alltide vessel access for UNE's vessels on the west side of the pier, and a single 6-foot by 20-foot floating dock to provide a tie-up location for the City of Biddeford Fire Boat on the east side of the pier.

3. An 80-foot by 5-foot gangway, to provide ADA compliant access to the float system.

4. An upland access road connecting the existing road at the MSC to the proposed pier, including associated site grading, drainage, and stormwater management features.

These proposed improvements will result in a total increase in impervious area totaling 0.249 acres. The increase in impervious area will be managed by the two bioretention filter cells to the north of the Girard Marine Science Center. Runoff will be conveyed to the bioretention filter cells via proposed vegetated swales along the low side of the superelevated access road. The bioretention filter cells will slowly release captured stormwater via underground pipe into the Saco River/Atlantic Ocean.

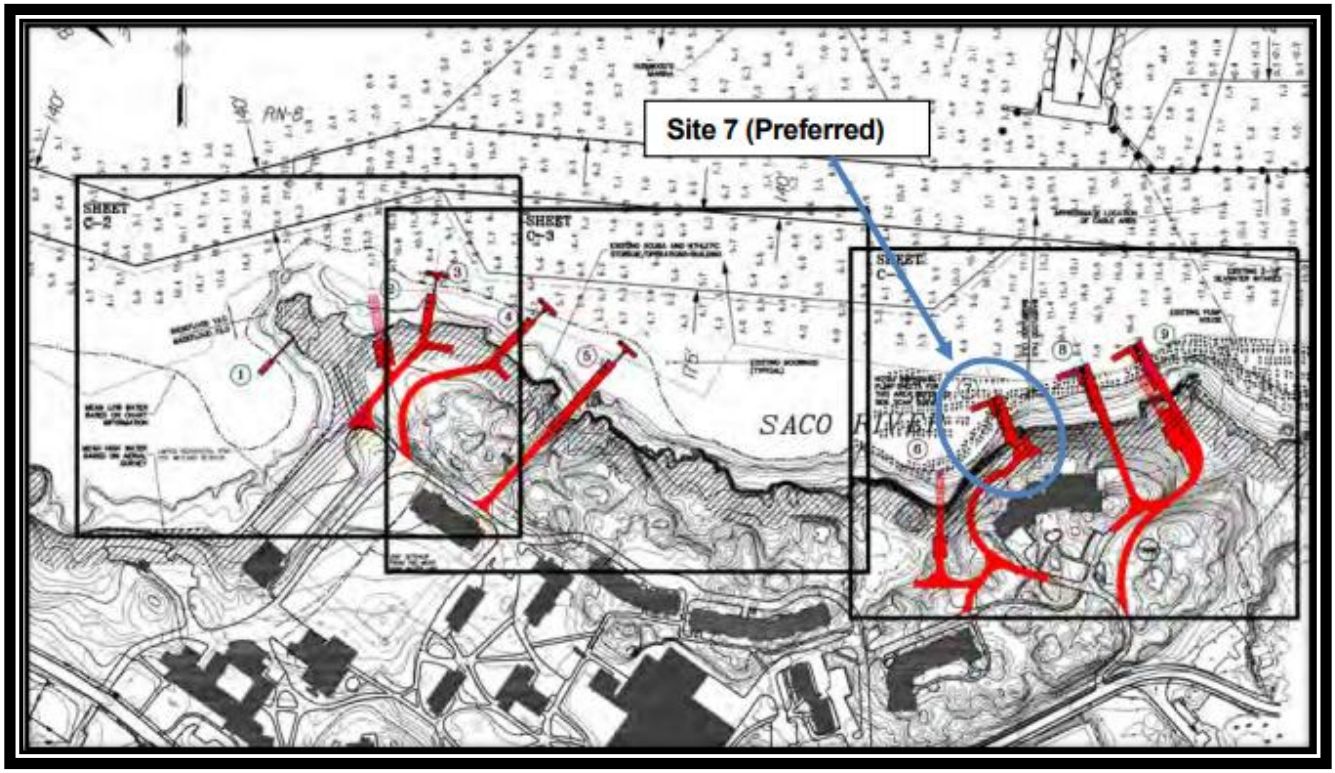

Fig. 1 – Alternative Sites Evaluated in 2008-2010 Study

As outlined in their project narrative, multiple locations for the pier were evaluated Alternative locations *"for more than 10 years and has gone through extensive planning and alternatives analysis in arriving at the design that is proposed"*.

The University's consultants (Daniel Bannon, P.E., CFM and Barney Baker, P.E. of GEI Consultants) evaluated alternate pier locations and concluded that:

> *"GEI has reviewed the concerns raised by the Saco and Biddeford Harbormasters and evaluated their impact on the proposed design, reviewed the history of planning that led to the current design location and layout, and reviewed the potential advantages and disadvantages offered by the suggested alternative pier location. <u>While we respectfully value the input and suggestions for a layout alternative, it is our opinion that the proposed design represents the preferred balance of project requirements and site constraints. Compared to the suggested</u>*

*alternative, the proposed design achieves adequate water depth, provides safe navigation, results in a structure of smaller overall dimensions with less coastal wetland impact, does not appear to be subject to significant sediment deposition, and locates the pier in a location that is less exposed to current and icing impacts. For these reasons, GEI recommends that the current design and pier location be maintained" (*Note: Emphasis added).*

After completing the pier feasibility study and identifying Site 7 as the preferred pier location, UNE undertook additional effort in 2015-2016 to study alternative pier layouts that would address the functional and vessel needs of the marine science curriculum as well as the site exposure, berthing conditions, access requirements, and associated site impacts. During this work, numerous alternative pier layouts were considered. Alternate locations evaluated water depth, exposure to currents, location relative to river sediment deposition, exposure to icing, and impacts to moorings.

2. PROJECT DATA/INFORMATION

1.	Applicant:	University of New England 11 Hills Beach Road Biddeford, ME
2.	Owner of Property:	University of New England 11 Hills Beach Road Biddeford, ME
3.	Agent:	Tom Saucier, P.E. Site Design Associates 23 Whitney Way Topsham, ME 04086
4.	Surveyor:	Tom Saucier, P.E. Site Design Associates 23 Whitney Way Topsham, ME 04086
5.	Project Location:	11 Hills Beach Road
6.	Project Tax Map #/Lot #:	Tax Map 52 Lot 4
7.	Lot Size:	49.9-acres
8.	Base Zoning:	Institutional (IN)
9.	Overlay Zoning:	Shoreland Zoning
10.	Existing Use:	Saco River
11.	Proposed Use:	Marine Research Pier
12.	Approvals Required:	Site Plan and Shoreland Review
13.	Uses in the Vicinity:	University
14.	Waivers Needed:	A. Article XI.II. Section 5.B.1.a. (post development runoff) B. Article XI.II. Section 5.B.1.e.3. (Slopes steeper than 2:1 in ledge)
18.	Waivers Granted:	Pending
22.	Other Non-City Permits Required:	N/A
23.	LDR Attachment A: Fees Paid:	Yes

25.	Planning Board Review History: Sketch Plan Review - May 21, 2025; Site Walk June 9, 2025; Preliminary Review - June 18, 2025

3. REVIEW PROCESS

Per City ordinance, this application is subject to Site Plan (Land Development Regulations, Article XI) review and Shoreland Zoning approval by the Planning Board. Below is a list of required agency reviews.

- Saco River Corridor Commission (SRCC) – Approval 9-13-2024 Attached pages # 282-287 of the Applicants application.
- Department of Environmental Protection (MDEP), Findings of Fact (FOF) and Order Pages # 288-295, dated April 11, 2025, of the Applicants application.
- U.S. Army Corps of Engineers, New England District, approval dated March 28, 2025. Pages # 296-298 of the Applicants application.
- Maine Historic Preservation Commission, Approval dated May 15, 2023.
- City of Biddeford letter from Former City Manager (James Bennett) regarding a "Notice to Proceed with External Reviews" / compliance with City Code 74-35, subsections (c) items 1-10, dated August 19, 2025, Pages #302-303 of the Applicants application.

4. SITE PLAN APPROVAL / SITE DESIGN CRITERIA:

A. Drainage:

Applicants' Comments: *A Stormwater Management Report is attached. The report submitted demonstrates compliance with Maine Department of Environmental Protection (DEP) Basic and General standards. The project will include bioretention filters designed to DEP BMP standards for enhancement of stormwater runoff quality. A waiver of Article XI.II.Section 5.B.1. is required for an increase in the rate of runoff. This waiver has historically been granted by the planning board for projects located on the UNE parcel that are directly tributary to tidal receiving waters, which will be the case for this project. There will be no impact on the capacity of a receiving downgradient storm system. The bioretention filters will provide stormwater quality enhancement and cooling of runoff, as well as a level of stormwater detention. Level spreaders will be utilized to evenly distribute runoff from the bioretention filters into sheet flow. Although an increase in the rate of runoff is shown at two point locations on the drainage plans, the reality is that the stormwater runoff from the subcatchments is distributed over a wide area.*

Staff Comment: This standard has been met, as the project complies with the Maine Department of Environmental Protection (DEP) Basic and General standards and permits from the agency. **The project meets this standard**.

B. Utilities: Power will be fed underground to the pier from the Girard Marine Science Center.
Staff Comment: Power to the proposed pier will be provided from the Girard Marine Science Center building. **The proposed utilities address and meet this standard**.

C. Parking: There will be no formal dedicated parking associated with the project.
Staff Comment: The Girard Marine Science Center provides adequate parking for the associated / "accessory structure (pier)" as the students and faculty of Science Center will be the same users of the proposed pier. **The application meets this standard**.

D. Structural Layout and Design:

a) Design of Buildings:
An 8 ft x 10 ft shed is proposed on the pier. A photo in attachment 12 shows a rendering of the shed; a wood frame structure, with weather resistant siding, and a metal roof.

b) Setbacks:
The research pier is sited in conformance with all setback requirements.

c) Fire Protection & Safety:
Based on input from the fire department, the road width was increased to 20 ft per NFPA standards. The turnaround meets the city required dimensional standards and has been modelled to accommodate fire apparatus.

d) Landscaping:
The revegetation plan has been developed to meet the City of Biddeford's Shoreland Zoning requirements as well as to preserve a visual buffer for the access drive to minimize visibility from the water to the greatest extent possible, while achieving the required clearing and considering functional requirements such as snow plowing at the turnaround. The revegetation plan also meets the requirements of the Saco River Corridor Commission (SRCC) who issued a permit for the project.

Revegetation Plan: The revegetation plan, drawing C-15, is intended to meet the city of Biddeford's shoreland zoning requirements.
Details are as follows:
- 49 trees are being removed with 21 of those within the 50-foot HAT setback
- Approximately 5,850 SF of understory duff later and low growth vegetation (predominantly non-native invasive honeysuckle) is being disturbed within 50 feet of the HAT.
- 5 tree species are proposed in approximate equal quantities with the evergreen trees located between the road shoulder grading and the top of embankment where they are anticipated to fit under the remaining mature forest canopy, and between existing trees and ledge. Field verification during construction will be required to ensure final plant locations are feasible if shallow ledge or significant remaining tree root stock is present.
- 3 shrubs (2 evergreen and 1 deciduous) are proposed to plant at the toe of the road embankment as well as in areas around the turnaround where fitting larger trees will be challenging given limited space and the need to maintain an area for plowed snow.
- Deciduous trees are spread throughout the area.
- The bioretention cells will be filled with a mix of wet, drought and salt tolerant shrubs and perennials which are shown on the plan as a hatched area. The notes on the plan and drawing C-16 plant schedule describe the random pattern mixing of these plants throughout the bio retention cells.
- All other disturbed areas will be planted with a native roadside mix of perennial grasses and flowers. It is recommended that this area be mowed once a year in the fall to maintain the mix of plants. If mowed more often, it will revert to mostly lawn grasses. • Mature plant sizes are listed on the plant list to give a sense of the amount of screening that may occur over time.

Staff Comment: The proposed development meets these standards.

e) Service, Storage, and Utility Areas:

Staff Comment: Not applicable

f) Paving, Parking, and Storage Areas:

No paving, parking, or storage is located within the side or rear setback of the property, nor within the front setback of the property.

Staff Comment: The proposed development meets this standard.

g) Handicapped Accessibility:

Staff Comment: The proposed pier has been designed to meet ADA requirements. **The proposed development meets this standard.**

h) Loading Facilities:

Staff Comment: Standard not applicable.

i) Parking, Loading, and Protective Buffers:

The non-vegetated area of the land being developed will be less than 75% and a minimum of 25% of the land area being developed either remains in its natural state or consists of landscape and lawn areas.

Staff Comment: The proposed development meets this standard.

j) Open Space:

Staff Comment: Not applicable.

k) External Lighting:

An electrical site plan is included in the drawing set which shows the site lighting. Full cut off fixtures will be utilized, and lighting will be the minimum necessary for safety and functionality.

Staff Comment: The proposed development meets this standard.

l) Signs:

Staff Comment: The proposed standard is not applicable.

m) Historic and Archeological Resources:

See attachment 10 for a letter from the Maine Historic Preservation Commission clearing the project.

Staff Comment: The proposed development meets this standard.

5. Shoreland Zoning Land Use Standards:

The project will comply with the applicable standards of Article XIV. Section 15.C. which is listed below:

15 C. Piers, docks, wharfs, bridges and other structures and uses extending over or below the normal high-water line of a water body or within a wetland.

1. ***Except as provided in Section 15C11 and Section 15X7, no more than one pier, dock, wharf or similar structure extending or located below the normal high-water line of a water body or within a wetland is allowed on a single residential lot; except that when a single lot contains at least twice the minimum shore frontage as specified in Section 15A, a second structure may be allowed and may remain as long as the lot is not further divided.***

Staff Comment: Standard not applicable

2. ***Access from shore shall be developed on soils appropriate for such use and constructed so as to control erosion.***

Staff Comment: Access from shore will be developed on soils appropriate for the use. A detailed erosion control plan has been prepared for the project. The proposal meets this standard.

3. ***The location shall not interfere with existing developed or natural beach areas.***

Staff Comment: The proposal does not interfere with existing developed or natural beach areas. The application meets this standard.

4. *The facility shall be located so as to minimize adverse effects on fisheries.*

Staff Comment: The facility has been located to minimize adverse effects on fisheries. The plan was reviewed by the National Marine Fisheries Service. The application meets this standard.

5. ***The facility shall be no larger in dimension than necessary to carry on the activity and be consistent with the surrounding character and uses of the area. A temporary pier, dock, or wharf in nontidal waters shall not be wider than six feet for non-commercial uses.***

Applicant Comment: The facility size is the minimum necessary to carry out current and future research activities and is consistent with the surrounding character and uses of the area, including the Camp Ellis pier on the opposite side of the river.

Staff Comment: The proposed project meets this standard.

6. *No new structure shall be built on, over or abutting a pier, wharf, dock or other structure extending beyond the normal high-water line of a water body or within a wetland unless the structure requires direct access to the water body or wetland as an operational necessity.*

Staff Comment: Standard not applicable

7. *New permanent piers and docks on nontidal waters shall not be permitted unless it is clearly demonstrated to the Planning Board that a temporary pier or dock is not feasible, and a permit has been obtained from the Department of Environmental Protection, pursuant to the Natural Resources Protection Act.*

Staff Comment: A temporary pier / dock at this location at this location is not feasible for the proposed use. The Applicant has obtained approval from the Department of Environmental Protection (DEP).

8. *No existing structures built on, over or abutting a pier, dock, wharf or other structure extending beyond the normal high-water line of a water body or within a wetland shall be converted to residential dwelling units in any district.*

Staff Comment: Standard not applicable

9. *Except in the General Development District, structures built on, over or abutting a pier, wharf, dock or other structure extending beyond the normal high-water line of a water body or within a wetland shall not exceed 20 feet in height above the pier, wharf, dock or other structure*.

Staff Comment: An 8 ft x 10 ft shed for storage of life jackets, tools, and research equipment is proposed on the pier, and is an operational necessity. The shed will not exceed 20 ft in height. **The proposal meets this standard.**

NOTE: Permanent structures projecting into or over water bodies shall require a permit from the Department of Environmental Protection pursuant to the Natural Resources Protection Act, Title 38 M.R.S.A., Section 480-C.

Staff Comment: The Applicants have received approval for the proposed dock from the Maine Department of Environmental Protection (MDEP)

10. *Vegetation may be removed in excess of the standards in Section 15P of this ordinance in order to conduct shoreline stabilization of an eroding shoreline, provided that a permit is obtained from the Planning Board. Construction equipment must access the shoreline by barge when feasible as determined by the Planning Board.*

Applicant Comments:

a. *When necessary, the removal of trees and other vegetation to allow for construction equipment access to the stabilization site via land must be limited to no more than 12 feet in width. When the stabilization project is complete, the construction equipment accessway must be restored.*

b. Revegetation must occur in accordance with Section 15S.

NOTE: A permit pursuant to the Natural Resource Protection Act is required by the Department of Environmental Protection for shoreline stabilization activities.

Staff Comment: The applicant has submitted a detailed erosion control and revegetation plan for the project which adequately addresses erosion control and site revegetation standards. **The applicant meets this standard.**

11. A deck over a river may be exempted from the shoreland setback requirements if it is part of a downtown revitalization project that is defined in a project plan approved by the legislative body of the municipality, and may include the revitalization of structures formerly used as mills that do not meet the structure setback requirements, if the deck meets the following requirements:

Applicant's Comments:

a. The total deck area attached to the structure does not exceed 700 square feet;

b. The deck is cantilevered over a segment of a river that is located within the boundaries of the downtown revitalization project;

c. The deck is attached to or accessory to an allowed commercial use in a structure that was constructed prior to 1971 and is located within the downtown revitalization project;

d. The construction of the deck complies with all other applicable standards, except the shoreline setback requirements in Section 15B; and

e. The construction of the deck complies with all other state and federal laws.

Staff Comment: The proposal is for a dock/pier, so the above standards related to "decks" are not applicable. **Standard not applicable**.

6. Departmental Review Comments:

E. Planning:

1) No Comments.

F. Code Enforcement:

1. No comments / concerns at this time.

G. Engineering / Public Works:

1. No comments at this time.

H. Police Department:

1. No comments / concerns at this time.

I. Fire Department:

1. The Fire Department has been meeting with representatives of UNE to verify the proposed fire turn-around's design is adequate to maneuver the City's largest fire apparatus.

J. Traffic Peer Review:

1. Not Applicable.

K. Engineering Peer Review:

1. No comments at this time.

7. SITE PLAN APPROVAL CRITERIA: The proposed project will need to meet the below standards at Final Planning Board review:

1) The proposed use meets specific requirements set forth in this ordinance and would be in compliance with applicable state or federal laws;

2) The proposed use would not create fire safety hazards by providing adequate access to the site, or to the buildings on the site, for emergency vehicles and would not create hazards through the storage of chemicals and wastes;

3) The proposed exterior lighting, where allowed, would not create hazards for motorists traveling on adjacent public streets or is adequate for the safety of occupants or users of the site or would not damage the value and diminish the usability of adjacent properties;

4) The provisions for buffers and on-site landscaping provide adequate protection to neighboring properties from detrimental or unsightly features of the development;

5) The proposed use would not have a significant, detrimental effect on the use and peaceful enjoyment of abutting property as the result of noise, vibrations, fumes, odor, dust, glare, hours of operation, or other causes;

6) The provisions for vehicular loading and unloading and parking and for vehicular and pedestrian circulation on the site and onto adjacent public streets would not create hazards to public safety or traffic congestion;

7) The proposed use would generate a volume of traffic that can reasonably be accommodated by the existing road network, or would not create unreasonable traffic hazards or would not exacerbate an existing traffic hazard, or would not create unreasonable traffic congestion;

8) The proposed use would not have a significant, detrimental effect on the value of adjacent properties which could be avoided by reasonable modification of the proposal;

9) The proposed use would not have an adverse impact on the privacy of the residents of the immediate area (within 500 feet) which could be avoided by reasonable modification of the proposal;

10) The proposed use would be in compliance with Biddeford's Comprehensive Plan;

11) The proposed use would not have an adverse impact on the immediate neighborhood or the community relative to architectural design, scale, bulk and building height, identity and historical character, or visual integrity, which could be avoided by reasonable modification of the proposal;

12) The design of the site would not result in significant flood hazards or flood damage or would be in conformance with applicable flood hazard protection requirements;

13) Adequate provision has been made for disposal of wastewater or solid waste or for the prevention of ground or surface water contamination;

14) Adequate provision has been made to control erosion or sedimentation;

15) Adequate provision has been made to handle stormwater runoff or other drainage problems on the site; and the proposed development will not unduly burden off-site surface water systems;

16) The proposed water supply would meet the demands of the proposed use for fire protection purposes;

17) Adequate provision has been made for the transportation, storage, and disposal of hazardous substances and materials as defined by state law;

18) The proposed use would not have an adverse impact on scenic vistas or on significant wildlife habitat or wetland areas and water bodies which could be avoided by reasonable modification of the proposal;

19) When located in the Shoreland Zone, the proposed use would meet the purposes of Shoreland Zoning as identified in Article XIV, Section 1 (Purposes) of this ordinance.

8. STAFF REVIEW

APPLICATION COMPLETENESS: This Application is for a "Preliminary Plan" review and in addition to Planning Board review and approval of the project, it also requires approval from:

A. **ZONING:**

The subject property is located within the City's Institutional (IN) zoning district where a university research dock is a permitted use.

B. **REVIEW STANDARDS:**

The major site details being proposed, such as the research dock, access roadway, and landscaped areas have been designed by the Applicant. The submitted application has been in the design process for approximately 10 years, so the "Preliminary Review" application is identical to the "sketch plan" documents as the application was "determined complete" during "Sketch Plan" review. Plans remain unchanged. In reviewing the application, Staff finds that the application satisfies the City's Shoreland Zoning Ordinance and Site Plan criteria.

C. WAIVER REQUESTS:

The Applicants are seeking two waivers, namely:

1) Article XI.II. Section 5.B.1.a.
"The rate of post-development runoff shall not exceed that of predevelopment. Details of catch basins, drainage pipes and retention/detention ponds shall be provided as needed with the application. All detail sheets shall bear the seal and signature of a professional engineer, licensed in the State of Maine".

Applicant Waiver Request Rational*:*

A waiver of Article XI.II.Section 5.B.1.a *is required for an increase in the rate of runoff. This waiver has historically been granted by the planning board for projects located on the UNE parcel that are directly tributary to tidal receiving waters, which will be the case for this project. There will be no impact on the capacity of a receiving downgradient storm system. The bioretention filters will provide stormwater quality enhancement and cooling of runoff, as well as a level of stormwater detention. Level spreaders will be utilized to evenly distribute runoff from the bioretention filters into sheet flow. Although an increase in the rate of runoff is shown at two point locations on the drainage plans, the reality is that the stormwater runoff from the subcatchments is distributed over a wide area.*

Staff Recommendation: The increased rate of post-development runoff is minimal, and Staff recommends granting this waiver request.

9. SAMPLE WAIVER REQUEST MOTIONS (Post Development Runoff):

A. Motion to Approve: I motion to APPROVE the requested waiver for Article XI.II. Section 5.B.1.a. (post development runoff) for Case # 2024.34 Site Plan and Shoreland Zoning Review for the University of New England (UNE) / Proposed Construction of a Marine Science Center Research Pier to be located at 11 Hills Beach Road (Map #52, Lot 4) located in the City's Institutional (IN) Zoning District.

B. Motion to Deny: I motion to DENY the requested waiver for Article XI.II. Section 5.B.1.a. (post development runoff) for Case # 2024.34 Site Plan and Shoreland Zoning Review for the University of New England (UNE) / Proposed Construction of a Marine Science Center Research Pier to be located at 11 Hills Beach Road (Map #52, Lot 4) located in the City's Institutional (IN) Zoning District, for the following reasons:

1) _____.
2) _____.
3) _____.

C. Motion to Table: I motion to TABLE the requested waiver for Article XI.II. Section 5.B.1.a. (post development runoff) for Case # 2024.34 Site Plan and Shoreland Zoning Review for the University of New England (UNE) / Proposed Construction of a Marine Science Center Research Pier to be located at 11 Hills Beach Road (Map #52, Lot 4) located in the City's Institutional (IN) Zoning District, for the following reasons:

1) _____.
2) _____.
3) _____.

SAMPLE WAIVER REQUEST MOTIONS (Article XI.II. Section 5.B.1.e.3. (Slopes steeper than 2:1 in ledge):

The Applicants are seeking a waiver to Article XI.II. Section 5.B.1.e.3. (Slopes steeper than 2:1 in ledge) which states *"No slope shall be created which results in a slope of more than two feet horizontal to one foot vertical unless proper retaining walls are proposed".*

Staff Recommendation: Staff reviewed the proposed site grading and find the proposed slope waiver to be acceptable, and recommend the Board grant the requested waiver. Below are sample motions:

1. Motion to Approve: I motion to APPROVE the requested waiver for Article XI.II. Section 5.B.1.e.3. (slopes greater than 2:1) for Case # 2024.34 Site Plan and Shoreland Zoning Review for the University of New England (UNE) / Proposed Construction of a Marine Science Center Research Pier to be located at 11 Hills Beach Road (Map #52, Lot 4) located in the City's Institutional (IN) Zoning District.

2. Motion to Deny: I motion to DENY the requested waiver for Article XI.II. Section 5.B.1.e.3. (slopes greater than 2:1) for Case # 2024.34 Site Plan and Shoreland Zoning Review for the University of New England (UNE) / Proposed Construction of a Marine Science Center Research Pier to be located at 11 Hills Beach Road (Map #52, Lot 4) located in the City's Institutional (IN) Zoning District, for the following reasons:

   A)_____.

   B)_____.

   C)_____.

3. Motion to Table: I motion to TABLE the requested waiver for Article XI.II. Section 5.B.1.e.3. (slopes greater than 2:1) for Case # 2024.34 Site Plan and Shoreland Zoning Review for the University of New England (UNE) / Proposed Construction of a Marine Science Center Research Pier to be located at 11 Hills Beach Road (Map #52, Lot 4) located in the City's Institutional (IN) Zoning District, for the following reasons:

A)_____.

B)_____.

C)_____.

4. SAMPLE MOTIONS FOR SITE PLAN AND SHORELAND ZONE APPROVAL:

The Application before the Board is a "Preliminary Plan", so a formal vote is required.

A. Motion to Approve: I motion to APPROVE Case # 2024.34 Preliminary Plan – Site Plan and Shoreland Zoning Review for the University of New England (UNE) / Proposed Construction of a Marine Science Center Research Pier to be located at 11 Hills Beach Road (Map #52, Lot 4) located in the City's Institutional (IN) Zoning District.

B. Motion to Deny I motion to DENY Case # 2024.34 Preliminary Plan – Site Plan and Shoreland Zoning Review for the University of New England (UNE) / Proposed Construction of a Marine Science Center Research Pier to be located at 11 Hills Beach Road (Map #52, Lot 4) located in the City's Institutional (IN) Zoning District, for the following reasons:

1)_____.

2)_____.

3)_____.

C. Motion to Table: I motion to TABLE Case # 2024.34 Preliminary Plan – Site Plan and Shoreland Zoning Review for the University of New England (UNE) / Proposed Construction of a Marine Science Center Research Pier to be located at 11 Hills Beach Road (Map #52, Lot 4) located in the City's Institutional (IN) Zoning District, for the following reasons:

1) _____.

2) _____.

3) _____.

CONFIDENTIAL
MEMORANDUM

To: Biddeford Planning Board

From: Harry B. Center, II, Esq., City Solicitor

Date: June 11, 2025

RE: UNE Pier Application

I am writing to supplement my memorandum dated June 9, 2025 regarding the pending University of New England pier application. Citizens have raised the issue regarding TEC Associates review of the initial application pursuant to the Harbor ordinance (Ordinance 74-35). Again, I caution the planning board that its review of this matter must be limited to the applicable city ordinances. There is not a provision within Article 14 §15(C), in the Shoreland zoning ordinance or site plan review, which authorizes the planning board to review the permission requirement in the city's Harbor ordinance.

Attached please find my memorandum dated July 8, 2024, which was sent to the former city manager. In that memorandum, I address the role of the harbormaster, specifically citing the city council's policy committee meeting of August 7, 2023, during which the current ordinance was presented and ultimately adopted by the council. Because the permission required from the harbormaster is not an opportunity to approve or deny an application for a pier, and the harbormaster role is "nothing but a facilitator," I provided a legal opinion that concluded an engineering firm could be delegated the task of reviewing the pier application and determining whether the application was complete. As stated in the memorandum, it is common for the City of Biddeford, including this planning board, to engage outside experts, such as traffic engineers, environmental engineers, and individuals to perform soil or water tests. In this matter, the city appropriately delegated the task of the harbormaster facilitating an applicant request pursuant to the ordinance. Lastly, I note that should there have been any interested party who would have had standing, the time for any judicial review of the city's activity in July and August 2024 has long passed.

CONFIDENTIAL
MEMORANDUM

To: City Manager James Bennett

From: Harry B. Center, II, Esq., City Solicitor

Date: July 8, 2024

RE: Opinion and Interpretation of City Code 74-35

You have asked me to provide you with my interpretation and legal opinion regarding City of Biddeford Code of Ordinances Sec. 74-35, which relates to construction of marine piers. This code provision has become the subject of interpretation as a result of the University of New England's recent application for a marine pier. This current ordinance provision was recently amended in September, 2023. An August 9, 2023 policy committee meeting approved a proposed draft ordinance that was submitted by Chair of the Harbor Commission, John Schafer. Set forth below is the full section of the current ordinance:

> *Sec. 74-35. Construction of wharf, pier or landing regulated.*
>
> *[Ord. of 4-20-1993, S 26-29; Ord. No. 2007.11, 3-6-2007; amended 2-19-2013 by Ord. No. 2013.7; 9-19-2023 by Ord. No. 2023.1021*

(a) *No additions, alterations, new construction or/or changes to an existing wharf, pier or landing shall be made without prior permission of the Harbormaster.*

(b) *Permission for the construction of any new wharf or pier within the jurisdictional limits of the City shall not be granted without approval of the Harbormaster, along with federal, state, and local governing authorities.*

(c) *To obtain permission for any new wharf or pier, the applicant must provide the following information:*

(1) *A formal boundary survey that has been documented at the Registry of Deeds.*

(2) *A copy of the boundary survey showing the littoral zone, established by extending property lines seaward.*

(3) *A location map from a portion of a USGS topographic map or coastal chart.*

(4) *Distance to navigable channels or any federal navigation project.*

(5) *Mean high- and low-water boundary.*

(6) *A plan view on the drawing(s) that shows the location and dimensions of the applicant's structure(s) in relation to the applicant's property lines.*

(7) *A typical cross section/side view of the applicant's structures on the drawing(s).*

(8) *Evidence that owners of abutting properties have been notified of the applicant's intended project.*

(9) *Evidence that the 1) Maine Historic Preservation Commission, 2) Aroostook Band of Micmac, 3) Passamaquoddy Tribe of Indians: Pleasant Point; Indian Township, 4) Houlton Band of Maliseet Indians, and 5) Penobscot Indian Nation have been notified of the applicant's intended project.*

(10) *Completed applications to the Army Corps of Engineers, Department of Environmental Protection and Biddeford Code Enforcement. A regulatory permit from the Saco River Corridor Commission may also be required in some instances.*

(d) *The process to obtain permission for any new wharf or pier shall be facilitated by the Harbormaster. Initially, the Harbormaster shall be available to guide the applicant through the application process and finally, to sign off that all regulatory approvals have been obtained for construction.*

I have previously provided you with opinions relating to allegations regarding the current City of Biddeford Harbormaster's prejudicial and biased statements regarding the potential University of New England pier. I have opined those statements made by the current harbormaster prior to any formal application from UNE, such as "I will never approve the pier application in that location," constituted bias and a violation of the University's due process rights. You removed the current harbormaster from consideration of the UNE marine pier application. While the City determines who, on behalf of the City, will function in the role as harbormaster regarding the UNE marine pier application, you have asked me to review and provide you with a legal opinion as to what conditions and criteria would be applied to the marine pier application on behalf of the City, pursuant to the aforementioned code provisions.

The interpretation of the provisions of a municipal ordinance is a question of law. *Rockland Plaza Realty Corporation v. City of Rockland, 2001 Me. 81.* Numerous Maine Supreme Court Opinions provide that ordinance provisions should be given their plain and ordinary meaning, and any interpretation of ordinance language should be done in a manner to avoid absurd, illogical, or inconsistent results. *Wright v. Town of Kennebunkport, 1998 Me. 184.* There is a legal presumption favoring the validity of municipal ordinances and a municipal ordinance's constitutionality and reasonableness will be presumed. *Gabriel v. Town of Old Orchard Beach, 390 A.2d 1065 (Me. 1978).* In construing and interpreting municipal ordinances, a reviewing Court may review the purpose of the enactors to determine the intent of the ordinance. *Natale v. Kennebunkport Board of Zoning Appeals, 363 A.2d 1372 (Me. 1976).* Applying these legal principles regarding ordinance interpretation, I can provide you with the following opinions.

Subsection (a) and (b) of Sec. 74-35 expressly provide that any new construction of a pier, within the jurisdictional limits of the City of Biddeford, requires permission of the harbormaster. The issue is what criteria the harbormaster applies when determining whether to "grant permission." On its face, it would appear that the harbormaster has the authority to "deny" permission of a pier application. However, applying the aforementioned legal principles when reviewing the ordinance at (c) (1-10), it is my opinion that the role of a harbormaster granting permission is limited to a review of the information set forth in items 1-10. The harbormaster's review is limited to inspection of the items for completeness, then upon the applicant's receipt of all other agency's approval, permission is then granted to the applicant to proceed to the City Planning Board and Code Office.

The ordinance provides at subsection (d), that the harbormaster shall ***guide*** the applicant through the application process, and ***"sign off that all regulatory approvals have been obtained for construction."*** In my opinion, a plain and ordinary interpretation of the entire ordinance set forth in Section 74-35 leads to the conclusion that the harbormaster's role in granting permission is limited to an initial determination that all of the items set forth in (c) (1-10) have been completed and submitted to the appropriate governing bodies, and then a subsequent determination as to whether those agencies have granted approval.

When interpreting ordinance provisions, the court looks to the legislative intent of the enacting body. A review of the intent of the City Policy Committee and ultimately the City Council's intent supports my opinions regarding interpretation of the ordinance. Ordinance 74–35 was initially reviewed by the city Council subcommittee, the Policy Committee. At a public meeting on August 7, 2023, chairperson of the Harbor Commission, John Schaeffer, presented the proposed ordinance. During that meeting, City Counselor, Norman Belanger asked Mr. Schaeffer, whether the harbormaster was the person who issued a permit for a new pier. Mr. Schaeffer expressly responded, *"that is absolutely not the case."* Mr. Schaeffer further explained that the harbormaster is *"nothing but a facilitator"*. This legislative intent, combined with reading the ordinance as a whole, leads to the legal conclusion that the harbor-master's role is to guide an applicant through the process, and determine whether the items in subsection (c) (1-10), are complete and ultimately approved by the other agencies.

Construing the ordinance in its entirety and a review of the legislative (City Council) intent unequivocally evidences a clear intent defining the role of the harbormaster as a facilitator. An applicant for a new pier must, as a condition precedent, initially establish that items 1 through 10 are complete. Upon return to the harbormaster following completion of those items and receipt of approval from the regulatory bodies, the harbormaster, then ***"signs off"***. The express use of the term ***"signs off"*** establishes the role of the harbormaster in the process.

It is further my opinion that review of items 1 through 10 are not exclusively delegated to the appointed harbormaster. Facilitation and review of those items may be delegated to a person or entity with technical expertise, such as an engineering firm. It is common for the City to engage independent experts to review permit applications such as traffic engineers, environmental engineers and others depending on the nature of the approval sought. Because the review process is not the final approval by the City, such delegation is permissible. It is important to note that the harbormaster, the code enforcement officer and other individuals in city offices, such as

planners and assistant code personnel, are generally not licensed, professional engineers, nor do their approvals act as performing those expert reviews. The Planning Board, Code Office and other City employees rely on submissions from the applicant such as a stamped professional engineer's approval on plans submitted, structural plans, and other highly technical information that is beyond the scope of city officials. The city does not want to be held liable for the soundness of any project, nor the technical approvals of those projects. City officials rely on the applicant's expert's submitted plans and/or approvals from other regulatory bodies such as the Army Corp of Engineers and the State Department of Environmental Protection in the case of marine piers.

It is my legal opinion that the harbormaster does not issue or approve a permit to construct a marine pier. Pursuant to the ordinance, the harbormaster acts as a facilitator to ensure the prerequisites have been submitted, then once all those approvals are obtained then performs the ministerial act of signing off/granting permission to proceed to the City Planning Board and Code Office. The City Shoreland Zoning Ordinance, as well as the duties of the code enforcement officer to issue permits for structures, provide the city with the necessary final review of the process and protect the City's interests. The harbormaster role pursuant to the ordinance is limited to being a facilitator of the application and ultimately signing off, moving the application forward to the Planning Board and Code Office.

CONCLUSION

1. Reading the ordinance as a whole and applying legal principles for interpretation of the ordinance, the harbormasters role is as a facilitator to ensure that an applicant for a marine pier has completed items in section (c) 1-10 as a condition precedent.
2. The City may delegate the harbormaster tasks (facilitation of submission to AOC, DEP, etc.) and ensuing completeness, to a third party such as an independent engineer or firm.
3. Once an applicant has received information that includes APPROVALS from the agencies that have expertise in reviewing such projects, the harbormaster performs that ministerial task of granting permission to the applicant or "signs off", pursuant to section (d) of the ordinance.
4. Once the harbormaster signs off on the marine pier application, the Planning Board and Code office review the project and ultimately decide whether grant approval and issue the appropriate permits, pursuant to the City's Shoreland Zoning Ordinance and Floodplain Management Ordinance.

CONFIDENTIAL
MEMORANDUM

To: Biddeford Planning Board

From: Harry B. Center, II, Esq., City Solicitor

Date: June 9, 2025

RE: UNE Pier Application

The following sets forth my opinions and responses to the various questions raised during the initial planning board meeting regarding the University of New England pier application. This Memorandum also addresses questions from the planning department and is in response to comments made by the public. Some responses are set forth by reference to the attached prior documentation, opinion memorandum, and correspondence.

I. SCOPE OF PLANNING BOARD REVIEW

Initially as City Attorney, I must advise the planning board as to the criteria for legal review of this application. This project falls within the jurisdiction of the city's shoreland zoning ordinance. Pursuant to the city land use ordinances, this project is also subject to site plan review. Those ordinances provide the planning board with jurisdiction to review and vote on this project.

The planning board's review of the UNE pier application is pursuant to Article XIV of the city's, shoreland zoning ordinance Section 15 (C). That ordinance provision, attached hereto, provides the only basis for planning review and subsequent granting of approval or denial. Just last week, the Maine Supreme Judicial Court in *Newfield Sand v. Town of Newfield, 2025 ME 45,* confirmed the well-established legal authority relating to a planning board's application of ordinance provisions when making any determination to grant or deny an application. The court stated, that any conditions imposed by a municipal planning board must be authorized by the enabling ordinance and defined clearly when a permit is considered, so that the applicant understands what is required, *Newfield Sand v. Town of Newfield* citing *Cobbossee Development Group v. Town of Winthrop 585 A.2d 190 (ME. 1981).* Permit requirements and ordinances lacking specificity are vulnerable to challenge for vagueness or excessive delegation of the municipalities legislative authority *Doane v. Department of Health and Human Services 2021 ME 28.*

At the May 21, 2025 initial planning board meeting, much public comment related to the proposed location of the pier, the current of the river in the area where the proposed pier would be located, the depth of the water at that location and other issues, including, but not limited to moorings in the vicinity of the pier location. None of those concerns raised are within the jurisdiction of the planning board pursuant to Article XIV, §15(C.)

Regarding the issue of the planning board's jurisdiction, and what standards the planning board may apply, considering whether or not to approve this project, I advise the planning board to also rely upon recommendations from the City of Biddeford planning department staff. I have asked staff to review whether I am missing any provisions that would allow the planning board to consider water depth at the location of the proposed pier, impact of the proposed pier on navigation, impact of the proposed pier on the current of the river or any of the other many navigation and waterway related concerns, raised by many of the speakers at the public hearing. To date, I have not been advised of any such provisions are within the planning board review process.

II. REMOVAL OF CURRENT HARBORMASTER FROM UNE PIER PROCESS

Attached is a memorandum that I drafted for the former city manager on May 15, 2024 regarding the UNE pier application and issues regarding the Biddeford Harbormaster and the Biddeford Harbor commission. That memorandum is titled "confidential" because it contained my legal advice to the city manager regarding numerous issues involved at that time. A review of the attached memorandum starting with the "issue" section provides background. You may note that the University of New England is arguing that the late, former harbormaster actually gave his approval verbally for the current requested site.[1] Please review the memorandum, as it explains the legal basis for why the harbormaster's role in this process was changed as well as the legal basis for removing current Harbor commission from the city's review process.

Enclosed, please find a memorandum from the former city manager to the Mayor, City Council, and the University of New England, dated May 22, 2024. In that memorandum, the city's action relating to the pier was set forth in writing. Additionally, I attach a letter dated May 22, 2024 from the former city manager to the current harbormaster which advised the current harbormaster that he would not be handling any review or approval of the UNE project and the basis for that decision.

III. HARBORMASTER PRO TEM PRIOR PERMISSION

Enclosed as a July 22, 2024 letter (I do not have a signed copy) from an independent engineering, firm, TEC Associates addressed to the city, outlining the fee and scope of project for TEC Associates to act as a harbormaster pro tem. The harbormaster's role in reviewing pier applications pursuant to city code Section 74-35, is limited to the Harbormaster being "nothing but a facilitator."[2] This engineering firm reviewed the UNE application in the role of Harbormaster Pro Tem pursuant to the city ordinance. On August 19, 2024, the city of Biddeford was provided notice that the application was complete and in the role of temporary harbormaster TEC Associates granted permission pursuant to the ordinance. The sole legal basis for a harbormaster to approve or deny a pier application is to **facilitate and guide the applicant's application process and ensure that the application is complete.** The city's harbor ordinance has no legal standards in place to review a pier application for whether the water depth is appropriate, there is an impact on current navigation, or other arguments made by the public at the May 21, 2025 public hearing. The same legal principles that limit a planning board's ability to review an application, also apply to

[1] The City has rejected that position.

[2] Quotation from former Harbor Commission Chair John Schaefer to the City Council policy committee on August 7, 2023, explaining the intent in drafting code Provision 74-35.

any review by a harbormaster. A citizen applying to their government for approval is constitutionally entitled to be made aware of the legal standards, and only those legal standards validly adopted by the governmental body may be applied to appeal, to approve, or deny a given application. I also attach a memorandum I sent to the former city manager on July 8, 2024, explaining the legal support for the principles, as well as the limitations of the harbormaster's review of a pier application.

IV. POTENTIAL PLANNING BOARD "DENIAL WITHOUT PREJUDICE"

I have been asked whether a member of the planning board may make a motion to "deny without prejudice" regarding the pier application. Any such denial must be based upon a standard that is applicable on this issue. The planning board may not arbitrarily deny a project based upon a desire to simply postpone it. There is no specific provision that I could find to authorize a "denial without prejudice." For guidance, a review of the zoning board of appeals ordinance provides that an applicant who has been denied may make another application two years after that denial or make a substantial change in the request. I would be very concerned about my ability to support a "denial without prejudice" if it is simply intended to delay the project and not based upon any of the standards set forth in the shoreland zoning ordinance.

The planning board enabling ordinance states that it must adopt Roberts Rules of Order. Under Roberts Rules a motion to table either to a date certain or indefinitely may be made. However, I caution you that such a motion without a specific Basis, i.e., needs more information on a subject that is within the planning board jurisdiction, an appeal could be taken from an arbitrary motion to table. I see no legal support for a motion to deny, without prejudice. The planning board may choose to grant the permit for the pier, deny it, or move to table it. Any such final action will first be appealed to the zoning board of appeals, then to the courts.

V. MOORINGS

You have asked me for advice regarding the issue of the placement of moorings in the area where the proposed pier would be located. The planning board has no jurisdiction regarding the issue of moorings. Similar to the analogy of a property ownership dispute between an applicant and another party, the planning board does not have jurisdiction over the legal issues of title or ownership. There are no provisions in the Shoreland zoning ordinance which the planning board would use to review the issue of the impact on moorings when a pier is constructed. Arguments by the public about ownership of the moorings, relocation of the moorings, and other concerns are not subject to the planning board review of this project.

Attached is a copy of the city's mooring permit application. Within that document, it is stated that the city may move the location of a mooring at the city's discretion at any time. Further, while it is not necessary for the planning board to consider all of these issues, a mooring permit is issued for only one year, and does not give the permit holder a legal ownership in any rights in the waterway. Even if the mooring issue was within the planning board's jurisdiction, the planning board would not require a pier, dock, or wharf applicant to compensate mooring permitees who may have moorings adjacent to a potentially constructed pier, dock, or wharf. This issue is not within the scope of the planning boards review.

CITY OF BIDDEFORD
SHORELAND ZONING
ORDINANCE
ARTICLE XIV
SECTION 15(C)

g. A vegetated buffer area is established within 25 feet, horizontal distance, of the normal high-water line of a water body, tributary stream, or upland edge of a wetland when a natural buffer area does not exist. The buffer area must meet the following characteristics:

i. The buffer must include shrubs and other woody and herbaceous vegetation. Where natural ground cover is lacking, the area must be supplemented with leaf or bark mulch;

ii. Vegetation plantings must be in quantities sufficient to retard erosion and provide for effective infiltration of stormwater runoff;

iii. Only native species may be used to establish the buffer area;

iv. A minimum buffer width of 15 feet, horizontal distance, is required, measured perpendicularly to the normal high-water line or upland edge of a wetland;

v. A footpath not to exceed the standards in Section 15P2a, may traverse the buffer.

6. Notwithstanding the requirements stated above, stairways or similar structures may be allowed with a permit from the Code Enforcement Officer, to provide shoreline access in areas of steep slopes or unstable soils provided; that the structure is limited to a maximum of four feet in width; that the structure does not extend below or over the normal high-water line of a water body or upland edge of a wetland, (unless permitted by the Department of Environmental Protection pursuant to the Natural Resources Protection Act, 38 M.R.S.A. § 480-C); and that the applicant demonstrates that no reasonable access alternative exists on the property.

C. Piers, docks, wharfs, bridges and other structures and uses extending over or below the normal high-water line of a water body or within a wetland.
[Amended 2-2-2010 by Ord. No. 2009.98; 10-18-2016 by Ord. No. 2016.69]

1. Except as provided in Section 15C11 and Section 15X7, no more than one pier, dock, wharf or similar structure extending or located below the normal high-water line of a water body or within a wetland is allowed on a single residential lot; except that when a single lot contains at least twice the minimum shore frontage as specified in Section 15A, a second structure may be allowed and may remain as long as the lot is not further divided.

2. Access from shore shall be developed on soils appropriate for such use and constructed so as to control erosion.

3. The location shall not interfere with existing developed or natural beach areas.

4. The facility shall be located so as to minimize adverse effects on fisheries.

5. The facility shall be no larger in dimension than necessary to carry on the activity and be consistent with the surrounding character and uses of the area. A temporary pier, dock, or wharf in nontidal waters shall not be wider that six feet for noncommercial uses.

6. No new structure shall be built on, over or abutting a pier, wharf, dock or other structure extending beyond the normal high-water line of a water body or within a wetland unless the structure requires direct access to the water body or wetland as an operational necessity.

7. New permanent piers and docks on nontidal waters shall not be permitted unless it is clearly demonstrated to the Planning Board that a temporary pier or dock is not feasible, and a permit has been obtained from the Department of Environmental Protection, pursuant to the Natural Resources Protection Act.

8. No existing structures built on, over or abutting a pier, dock, wharf or other structure extending beyond the normal high-water line of a water body or within a wetland shall be converted to residential dwelling units in any district.

9. Except in the General Development District, structures built on, over or abutting a pier, wharf, dock or other structure extending beyond the normal high-water line of a water body or within a

wetland shall not exceed 20 feet in height above the pier, wharf, dock or other structure.

NOTE: Permanent structures projecting into or over water bodies shall require a permit from the Department of Environmental Protection pursuant to the Natural Resources Protection Act, Title 38 M.R.S.A., Section 480-C.

10. Vegetation may be removed in excess of the standards in Section 15P of this ordinance in order to conduct shoreline stabilization of an eroding shoreline, provided that a permit is obtained from the Planning Board. Construction equipment must access the shoreline by barge when feasible as determined by the Planning Board.

    a. When necessary, the removal of trees and other vegetation to allow for construction equipment access to the stabilization site via land must be limited to no more than 12 feet in width. When the stabilization project is complete, the construction equipment accessway must be restored.

    b. Revegetation must occur in accordance with Section 15S.

    NOTE: A permit pursuant to the Natural Resource Protection Act is required from the Department of Environmental Protection for shoreline stabilization activities.

11. A deck over a river may be exempted from the shoreland setback requirements if it is part of a downtown revitalization project that is defined in a project plan approved by the legislative body of the municipality, and may include the revitalization of structures formerly used as mills that do not meet the structure setback requirements, if the deck meets the following requirements:

    a. The total deck area attached to the structure does not exceed 700 square feet;

    b. The deck is cantilevered over a segment of a river that is located within the boundaries of the downtown revitalization project;

    c. The deck is attached to or accessory to an allowed commercial use in a structure that was constructed prior to 1971 and is located within the downtown revitalization project;

    d. The construction of the deck complies with all other applicable standards, except the shoreline setback requirements in Section 15B; and

    e. The construction of the deck complies with all other state and federal laws.

D. Campgrounds. Campgrounds shall conform to the minimum requirements imposed under state licensing procedures and the following:

    1. Campgrounds shall contain a minimum of 5,000 square feet of land, not including roads and driveways, for each site. Land supporting wetland vegetation, and land below the normal high-water line of a water body shall not be included in calculating land area per site.

    2. The areas intended for placement of a recreational vehicle, tent or shelter, and utility and service buildings shall be set back a minimum of 100 feet, horizontal distance, from the normal high-water line of a great pond classified GPA or a river flowing to a great pond classified GPA, and 75 feet, horizontal distance, from the normal high-water line of other water bodies, tributary streams, or the upland edge of a wetland.
    [Amended 2-2-2010 by Ord. No. 2009.98]

E. Individual private campsites. Individual, private campsites not associated with campgrounds are allowed, provided the following conditions are met:
[Amended 2-2-2010 by Ord. No. 2009.98]

    1. One campsite per lot existing on the effective date of this ordinance, or 30,000 square feet of lot area within the Shoreland Zone, whichever is less, may be permitted.

MAY 15, 2024
LEGAL OPINION FROM CITY ATTORNEY TO CITY MANAGER REGARDING VIOLATIONS OF DUE PROCESS BY HARBORMASTER AND HARBOR COMMISSION

CONFIDENTIAL
MEMORANDUM

To: City Manager James Bennett

From: City Attorney Harry B. Center, II, Esq.

Date: May 15, 2024

RE: UNE Pier Application/Due Process Issues

BACKGROUND

Starting in 2015, The University of New England (hereinafter "UNE") has researched and undertaken preliminary steps to construct a marine pier/wharf appurtenant to its campus in the City of Biddeford (UNE refers to this as the Girard Marine Science Center Pier-hereinafter "pier"). The pier would be constructed within the City's jurisdiction of the Saco River. Pursuant to City of Biddeford Code of Ordinances (hereinafter "Code") Section 74-35 (a), any new construction of a pier/wharf must be approved by the City of Biddeford Harbormaster. Pursuant to the Charter of the City of Biddeford (hereinafter "Charter"), Article X, Section 7, the position of Harbormaster is created. Code provisions 74-46 through 74-51 set forth the authority, duties, qualifications and compensation of the Biddeford Harbormaster.

Pursuant to the City Charter, Article IV, the City Manager is the chief administrator of the City and has complete administrative authority over all City of Biddeford personnel, including the Harbormaster. That authority includes the power to direct, supervise, discipline all city department heads and officers and to follow and implement laws of the Federal Government, State of Maine and the Charter and Code provisions of the City of Biddeford.

The Harbormaster is a municipal government official, who must follow all Federal and State Constitutional provisions as well as the Charter and Code. A party aggrieved by a decision of the Harbormaster may appeal to the City's Harbor Commission, which is a Municipal body, established pursuant to the Code Section 74-61. Pursuant to Section 74-63, appeals from parties aggrieved by a decision of the Harbor Master are before the Harbor Commission.

ISSUE

In 2015 UNE initially approached the City with a plan/site map prepared by Baker Design Consultants, which set forth nine potential locations for the pier. UNE contends that at a site walk in August 2015 former Harbormaster Marshall Alexander verbally approved or accepted a location known as Site #7 for the pier. This is a disputed issue of fact. In my opinion, notwithstanding the Code provision which provides that the Harbormaster will facilitate and

guide any applicant through the application process (Code 74-35(d)), because UNE has not formally applied for approval of the pier, no formal municipal decision has been made. Due to funding delays and the pandemic and such, UNE never moved forward with a formal request to the Harbormaster seeking approval to construct the pier at Site #7. In the Fall of 2023, UNE contacted the current Harbormaster Paul Laverriere, to move forward on Site #7.

In early 2024 City officials received complaints from representatives of UNE regarding the Harbormaster Paul Laverriere's conduct in his capacity as Harbormaster as it relates to the proposed pier. Note that I do not call this a " pending application for a permit" as UNE has not yet formally submitted an application for the pier. UNE alleges that the City's Harbormaster, Paul Laverriere, has made numerous statements evidencing bias against the UNE- which is a factual dispute. More importantly, UNE alleges that Harbormaster Laverriere has prejudged the potential pier application, and he has publicly stated that he is going to deny or refuse to issue a permit to UNE for a pier at Site #7. This allegation is not subject to dispute.

Chair of the Harbor Commission, John Schafer, sent email correspondence dated February 25, 2024, to the entire Harbor Commission, the Mayor, yourself and the entire City Council with "cc" to a variety of citizens. In that email, Chair Schafer states that a dispute exists between UNE and Biddeford over the design and location of the subject pier. Further that email contained the minutes of a February 21, 2024 Joint Harbor and Shellfish Meeting. The minutes state ***"..., Paul has denied approval of the UNE pier design."*** The correspondence also states that UNE is threatening possible litigation. It is important to note that any "litigation" brought by UNE would be an administrative, appellate review of its Constitutional rights and not any type of litigation seeking money damages from the City. UNE has every right to seek judicial review of any denial of a permit by a governmental entity and should not be penalized or impugned for asserting its Constitutional rights.

Additional complaints by UNE against the Harbormaster are that the Harbormaster has unilaterally and in an ex parte manner advocated to other regulatory bodies to deny the UNE permit for a pier at Site #7. It was entirely improper for the Harbor Commission and its Chair to discuss a potential application for a permit, without notice to the applicant. UNE also alleges that the Harbormaster has contacted the Army Corp of Engineers (which also must approve any final pier plan), indicating that his is or will deny the application and he has urged the ACOE to deny the permit. In my opinion, all of these actions constitute a violation of UNE's due process rights and expose the City to losing any judicial appeal of a denial of a permit for Site #7, irrespective of the potential merits of such denial.

LEGAL CONCLUSIONS & OPINIONS

I have reviewed the City Charter, Code and applicable case law. Based on that research, I have opinions and advice to the City regarding the potential application by UNE for a permit to construct a pier at Site #7.

The public emails which state that the Harbormaster has denied a permit that has not been formally submitted violate the applicant, UNE's due process rights. The due process clauses of the Maine and federal Constitutions guarantee due process before a government entity deprives

any person of a property right. *Kirkpatrick v. City of Bangor*, 1999 ME 73, ¶ 13, 728 A.2d 1268; *see also* U.S. Const. amend. XIV, § 1; Me. Const. art. I, § 6–A. The pier application is a constitutionally protected property right of UNE.

Persons who come before an administrative board are entitled to a fair and unbiased hearing. *Fitanides v. City of Saco*, 2015 ME 32, ¶ 22, 113 A.3d 1088; *Gorham v. Town of Cape Elizabeth*, 625 A.2d 898, 902 (Me. 1993). An administrative hearing officer "enjoys a presumption of honesty and integrity, which is only rebutted by a showing of some substantial countervailing reason to conclude that a decisionmaker is actually biased with respect to factual issues being adjudicated." *Mr. & Mrs. V. v. York Sch. Dist.*, 434 F.Supp.2d 5, 12–13 (D. Me. 2006).

Statements by the Harbormaster that UNE"s application is not "common sense", made outside of any noticed, formal proceeding are in violation of due process. Those statements would likely be found by a reviewing court to constitute bias. The Harbormaster acted unprofessionally when he told the ACOE to deny the UNE permit and by informing the ACOE that he had already denied the permit.

Comments by a municipal official at municipal proceedings without the applicant being notified nor present create a perception of bias, violate due process and raise questions about a municipality's willingness to consider the contentions of its citizens in a fair and responsible way. UNE has the right to protect its property interests, including its appeals to a neutral, unbiased Harbor Commission or Court. *See Fitanides v. City of Saco*, 2004 ME 32, ¶ 36, 843. Further evidence of bias is set forth in the Harbor Commission Chair's email which references UNE's potential threatened litigation. The exercise of appellate rights is absolutely proper and should not be raised at any level of review.

It is my opinion that the City of Biddeford should engage an independent Harbormaster to review and determine the UNE pier application. This insulates the City from the time and cost of a lengthy appeal of what has already been deemed a 'denial' by the current Harbormaster. Such 'denial' has been illicitly approved by the Harbor Commission. I do not believe I would successfully defend either a denial by the Harbormaster or a review by the current Harbor Commission.

Should there be an appeal from the independent Harbormaster's decision, it will need to be presented to a City of Biddeford appellate body, separate and distinct from the current Harbor Commission, for the reasons stated herein.

HARBORMASTER RIGHTS

The current Harbormaster is a governmental employee who has his own Constitutionally protected due process rights in his employment as Harbormaster. It is my opinion that none of those rights are impugned as there is no reduction in pay or benefits, nor is his position in any way diminished. The City Manager is making a decision based on legal advice, to proactively prevent lengthy and very costly appellate review of a pier application that has irrefutably been

the subject of numerous violations of procedural due process. It is my opinion that the current Harbormaster has no right to review the City's decision to have UNE's permit reviewed by an independent Harbormaster.

EXECUTIVE SUMMARY

- There is no factual issue that the City has tainted the pending pier application by UNE, based on the February 25, 2024, Harbor Commission Chair email and the February 21, 2024, Harbor Commission minutes. Evidence of bias, violations of due process and general unfairness are established in the record.

- The decision to have an independent Harbormaster determine the UNE pier permit application is solely within the discretion of the City Manager, based on opinions from the City Solicitor and the Harbormaster has no appellate rights or right to review that decision.

- Should UNE choose to appeal any decision by the independent Harbormaster, a new appellate body should be created as the current Harbor Commission has tainted its ability to independently review any decisions on the UNE pier application.

N:\Shared\HBC WIP\Biddeford\UNE Marine Pier Issue\MEMORANDUM docx

MEMORANDUM FROM CITY MANAGER TO CITY OFFICIALS EXPLAINING DUE PROCESS VIOLATION ISSUES

City of Biddeford, Maine

The Office of
City Manager
James A. Bennett
Email: jbennett@biddefordmaine.org

MEMORANDUM

TO:	**Honorable Mayor Grohman** **Honorable City Council** **Biddeford Harbor Commission** **University of New England**
FROM:	James A. Bennett, City Manager
DATE:	May 22, 2024
RE:	**Administrative Hearing Authority for Anticipated Girard Marine Science Center Pier**

After an extensive review of information and consultation with the City Attorney, I have informed the Harbormaster that I am removing him as the Administrative Hearing Authority for the anticipated application for the above mentioned project. Included within this memo is the rationale for my decision. I want to make it clear from the onset that I have not found the Harbormaster to have malice or intention in his actions. Further, my decision should not be considered disciplinary in nature.

It is my responsibility to ensure all appointed officials, employees and hired agents of the City perform to the highest of standards. In this matter, the process must protect the constitutional property rights of all, including the applicant. Further the applicants are entitled to a fair and unbiased hearing. Without taking this action, I have concluded that those standards would not be achieved.

The City Code directs the Harbormaster to facilitate and guide any applicant through the application process (Code 74-35(d)). Since the UNE has not formally submitted an actual application, the interactions between the applicant and the Harbormaster is governed by this section of the City Code. On the surface, this does not raise any concerns.

Examination of the actual activities of the Harbormaster once the applicant has indicated a difference of opinion on the preferred site raises the concerns. Examination of known factual information has led me to conclude that his actions were beyond the scope required by City Code 74-35(d). I further have concluded that an independent body would determine that the Harbormaster had moved into his role as the hearing authority prior to an application having been filed.

Without going into the complete analysis, I will share some of the factual information that has influenced my decision. In public settings, the Harbormaster has made it clear he would not consider UNE's preferred choice and would not grant a permit for that site. It is generally accepted that he has been informally in contact with other reviewing agencies advocating for his preferred site. At public meeting(s) he attended, it was reported by municipal officials that the Harbormaster had denied UNE's application. No application had been filed and he did not correct the public record. He has also participated in public discussions with the Harbor Commission (the actual appellant board for any aggrieved applicant before the Harbormaster) regarding the pending application and his rationale for his

The City of Biddeford is an equal opportunity provider. To file a complaint, write to Diana Depaolo, Human Resource Director, 205 Main Street Biddeford, ME 04005, or call (207) 286-0593.

decision. He has referred to UNE's 'application' as lacking 'common sense' publicly and outside of any noticed, formal hearing.

Recent Maine court decisions were helpful for my review. Having the public record misrepresent a denial of a permit even before an actual application, is a denial of the applicants due process rights. In *Kirkpatrick vs City of Bangor,* 1999, the court concluded that denying due process rights within both the U.S. and Maine Constitutions is equivalent to denying a property right.

Further, an administrative hearing officer (which the Harbormaster is when considering formal applications) "enjoys a presumption of honesty and integrity, which is only rebutted by showing of some substantial countervailing reason to conclude that a decision maker is actual biased with respect to factual issue being adjudicated" *Mr. & Mrs. V. vs York School District,* 2006. The undisputed facts above, in my opinion, has tarnished the presumption provided by the law.

In addition, I will be advising, with the assistance of the City Attorney, the Harbor Commission of the difficulty in them hearing any potential appeals on this matter. Specifically, comments by municipal officials at a municipal proceedings without the applicant being notified nor present create a perception of bias, violation of due process and raises questions about a municipality's willingness to consider the contentions of its citizens in a fair and responsible way. UNE has the right to protect its property interests, including its appeals to a neutral, unbiased Harbor Commission or Court (*Fitandies vs City of Saco, 2004).* The public discussions at meeting on the merits of the forthcoming application, email communications, and raising the concern of the pending litigation (the excise of an appellate rights is absolutely appropriate and should never be raised as an issue in a review process) has amounted to an illicitly approved denial by the Harbor Commission.

I have also notified the Assistant Harbormaster, by copy of this communication, that he, because of the close working relationship and the admitted role of training him, will not be able to be the administrative hearing officer in this matter.

I will soon announce the appointment of a special 'Harbormaster Pro Tem' for the sole purpose of hearing and deciding on the anticipated application.

CITY MANAGER
LETTER TO HARBORMASTER
GIVING NOTICE OF REMOVAL
FOR UNE PIER REVIEW

City of Biddeford, Maine

The Office of
City Manager
James A. Bennett
Email: james.bennett@biddefordmaine.org

May 22, 2024

Mr. Paul Lariviere, Harbormaster
517 Pool Rd
Biddeford, Maine 04005

RE: Expected University of New England (UNE) New Pier Application

Dear Mr. Lariviere,

It is a reasonable assumption that UNE will formally submit their application for the so-called Girard Marine Science Center pier (SMSC Pier). This application will be submitted to you pursuant to Chapter 74-35(a)-(c) of the City Code.

In your official capacity as the Harbormaster, it is your responsibility to consider the application based on the merits of the submitted information. You must join other government officials in ensuring that constitutional property rights are protected, including those of the applicant. Further, you are entrusted to ensure applicants are entitled to a fair and unbiased hearing. As the City Manager, I am enjoined with the same responsibilities.

The City Code also directs the Harbormaster to facilitate and guide any applicant through the application process (Code 74-35(d)). I am aware that you have been playing this role with this proposed application since at least 1995, if not earlier. First as the Assistant Harbormaster and most recently, as the current Harbormaster.

The record is clear that UNE has a different opinion on the best location for the pier than the location your 'guidance and facilitation' has identified. Their preferred location, as I understand it, is based on the information they have received from technical experts they have hired to assist in siting and permitting the pier through various reviewing agencies.

Based on your public comments, you have been steadfast in your conclusion that the only location that is acceptable is the site that you directed UNE towards. These comments and other actions have raised the issue regarding your ability perform your duties objectively. It's my responsibility to evaluate whether you moved beyond the 'guidance and facilitation' role as contemplated by the Code and have essentially acted as the administrative hearing officer prior to the actual submittal of the application.

You have publicly stated there is no way that you would approve the site they are proposing on more than one occasion. It is generally understood that you have informally been in contract with other reviewing agencies to advocate support of your preferred site. There are public

meetings where it has been reported that you have denied the location that UNE desires; yet no such application has ever been made. You decided to let those comments stand even when lacking factual accuracy. You actively participated in public discussions with the Harbor Commission, the very appellant board to consider any appeals of the Harbormaster's decision, specific to your actions and rationale to date, without any notice to the applicant. Referring to UNE's 'application'[i] as lacking 'common sense' publicly and made outside of any noticed, formal proceeding.

Recent Maine Court decisions are helpful in my evaluation process. Having the public record misrepresent a denial of a permit even before an actual application has been submitted, is a denial of the applicants right to due process. In *Kirkpatrick vs City of Bangor,* 1999, the court concluded that denying the right to due process within both the U.S. and Maine Constitutions is equivalent to denying a property right.

Further, an administrative hearing officer (which you are when considering formal applications) "enjoys a presumption of honesty and integrity, which is only rebutted by showing of some substantial countervailing reason to conclude that a decision maker is actual biased with respect to factual issue being adjudicated" *Mr. & Mrs. V. vs York School District,* 2006. The undisputed facts above, in my opinion, have tarnished the presumption provided by the law.

It is my conclusion that allowing you to be the administrative hearing officer on the anticipated application would be a mistake. In my capacity as the City Manager, bound by the responsibility to ensure the application would be considered objectively, compels me to inform you that I will be removing you from any further action on this pending application. Further, you are directed to make no further comments in this regard, public or private.

I have also notified the Assistant Harbormaster, by copy of this communication, that he, because of the close working relationship and your admitted role of training him, that he will not be able to be the administrative hearing officer in this matter.

Finally, I will be advising, with the assistance of the City Attorney, the Harbor Commission of the difficulty with them hearing any potential appeals on this matter. Specifically, the fact that comments by municipal officials at a municipal proceeding without the applicant being notified nor present create a perception of bias, and that the violation of due process raises questions about a municipality's willingness to consider the contentions of its citizens in a fair and responsible way. UNE has the right to protect its property interests, including its appeals to a neutral, unbiased Harbor Commission or Court (*Fitandies vs City of Saco, 2004).* The public discussions at meetings on the merits of the forthcoming application, email communications, and raising the concern of the pending litigation (the excise of an appellate rights is absolutely appropriate and should never be raised as an issue in a review process) has amounted to an illicitly approved denial by the Harbor Commission.

I should make it clear, that I have not concluded that you have acted with malice nor that you have been intentional in your actions, but simply overstepped your facilitation and guidance role into actions that an independent body would consider inappropriate. Once this immediate issue is concluded, we can revisit my conclusion and decision.

I will soon announce the appointment of a special 'Harbormaster Pro Tem' for the sole purpose of hearing and deciding on the anticipated application.

Respectfully,

James A. Bennett,
City Manager

[1] Understanding that no formal application has been submitted

HARBORMASTER PRO TEM
TEC ASSOCIATES
REVIEW AND PERMISSION
AND CITY CORRESPONDENCE
GRANTING PERMISSION TO
UNE FOR PIER APPLICATION

TEC ASSOCIATES CONSULTING ENGINEERS

22 July 2024

Mr. James A. Bennett
City Manager
City of Biddeford, Maine
205 Main Street
Biddeford, ME 04005

Re: Agreement for Professional Engineering – UNE Pier Project

Dear Mr. Bennett:

TEC Associates proposes to provide professional engineering services for the above referenced project for a fee of $2,800. Our scope of services for this project includes the following tasks:

1. Review an application by the University of New England to construct a pier on the Saco River in Biddeford and make a determination if the application contains the information required by Section 74-35 (c).

All work shall be in accordance with the attached *Statement of Terms and Conditions* and *Engineering Rate Schedule*. Thank you for asking us to assist you with this project.

Very truly yours,
TEC ASSOCIATES

Wayne Duffett, P.E.
President

Enclosed: Statement of Terms and Conditions
Engineering Rate Schedule

I understand and accept this proposal for the City of Biddeford, Maine.

By: _____ Title: _____
(Authorized Representative)

By: _____ Date: _____
(Print or Type Name)

Please sign and return one copy of this proposal to TEC Associates.

40 Mechanic Street South Portland, Maine 04106
Phone: 207-767-6068

City of Biddeford, Maine

The Office of
City Manager
James A. Bennett
Email: james.bennett@biddefordmaine.org

July 9, 2024

University of New England
11 Hills Beach Road
Biddeford, Maine 04005

Attention: Mr. Alan Thibeault, VP of University Operations

RE: Proposed Marine Science Center Pier

Dear Mr. Thibeault,

I write to you today to update you on the above submittal. I apologize for the delay in proceeding with the application. As the University is very aware, unusual circumstances created challenges in assuring that the application was reviewed in an unbiased process.

On behalf of the City and after consulting with the City Solicitor, I have determined that the role of the Harbormaster consistent with City Code 74-35 is primarily limited to two;

- …to grant permission for the pier; and
- …to determine if subsections (c) 1-10 have been complied with.

Further, it is also my determination that completion of subsection (c) 1-10 is a condition precedent prior to the ability of the Harbormaster granting permission or 'signing off' pursuant to section (d) of the ordinance. The City further may delegate the determination of completeness to a third party independent qualified engineering firm.

Therefore, I have engaged Wayne Duffett, PE of TEC Associates specifically to make the determination if your application meets the criteria found in City Code 74-75 Section (c) 1-10. Your application materials have been provided to Mr. Duffett for his review. Your cooperation during his review is requested.

Please feel free to reach out to me if you have any questions

Sincerely,

James A. Bennett
City Manager

CC: Biddeford Mayor and City Council

City of Biddeford, Maine

The Office of
City Manager
James A. Bennett
Email: james.bennett@biddefordmaine.org

August 19, 2024

University of New England
11 Hills Beach Road
Biddeford, Maine 04005

Attention: Mr. Alan Thibeault, VP of University Operations

RE: Notice to Proceed with External Reviews

Dear Mr. Thibeault,

On August 9, 2024, I received written clarification from Mr. Wayne Duffett, PE of TECAssociates that UNE's proposed Research Pier and Float System has complied with City Code 74-35 subsections (c) 1-10. Those sections are as follows:

(1) A formal boundary survey that has been documented at the Registry of Deeds.
(2) A copy of the boundary survey showing the littoral zone, established by extending property lines seaward.
(3) A location map from a portion of a USGS topographic map or coastal chart.
(4) Distance to navigable channels or any federal navigation project.
(5) Mean high- and low-water boundary.
(6) A plan view on the drawing(s) that shows the location and dimensions of the applicant's structure(s) in relation to the applicant's property lines.
(7) A typical cross section/side view of the applicant's structures on the drawing(s).
(8) Evidence that owners of abutting properties have been notified of the applicant's intended project.
(9) Evidence that the 1) Maine Historic Preservation Commission, 2) Aroostook Band of Micmac, 3) Passamaquoddy Tribe of Indians: Pleasant Point; Indian Township, 4) Houlton Band of Maliseet Indians, and 5) Penobscot Indian Nation have been notified of the applicant's intended project.
(10) Completed applications to the Army Corps of Engineers, Department of Environmental Protection and Biddeford Code Enforcement. A regulatory permit from the Saco River Corridor Commission may also be required in some instances.

Based on this information and in harmony with my earlier communications, please consider this as formal notification from the City of Biddeford that the application has been found in compliance with

the above mention City Code. That finding allows the application to proceed in the next steps of the review process; namely formal review by all agencies except those that are part of the City of Biddeford. After each and all of those processes are complete, the City will move forward with the final review(s) by agents and Committees of the City.

While I don't believe it is necessary, let me empathically state that this communication does not in any form, imply that the City has in any way made a determination that the location submitted has been approved. Said approval will considered after completion of all process and in compliance with applicable laws, regulations. This includes all local ordinances.

Please feel free to reach out to me if you have any questions

Sincerely,

James A. Bennett
City Manager

CC: Biddeford Mayor and City Council

EXAMPLE OF
MOORING PERMIT

Harbor Master

City Of Biddeford
205 Main Street
P.O. Box 586
Biddeford, ME 04005-0586

APPLICATION DUE DATE: MARCH 15TH

Read Carefully Before Signing

MOORING PERMIT APPLICATION

(Please Print Or Type)

Date of Application _____ Permit# _____

USE: Personal Rental Comm. Fish Other _____ Summer Year Round City Tag# _____
(Circle One) (Circle One) (By Harbor Master)

TYPE: Granite Block Cement Block WEIGHT_____ HEAVY CHAIN _____ LIGHT CHAIN/NYLON _____ BOWLINE_____
(Nylon Only; Non-Floating)

BOAT REG./DOC# _____ BOAT NAME _____ MAKE _____ YEAR BUILT _____

OWNER NAME _____ HOME TEL: _____ BUS TEL: _____

MAILING ADDRESS _____ CELL. TEL: _____

PERMANENT ADDRESS _____ TEL: _____

_____ EMAIL _____

(Name, address & telephone number of local person responsible for boat, if non-resident REQUIRED)

BOAT DESCRIPTION: Color_____ Trim_____ Length _____ Draft_____ Propulsion_____

OPEN CABIN CANOPY LOBSTER CRUISER SAIL WORK ROW OTHER_____

SPECIFIC LOCATION OF MOORING AREA REQUESTED _____

DATE PRESENT MOORING PUT DOWN _____ LAST INSPECTED _____ BY WHOM_____

By signing this mooring permit application for the City of Biddeford I hereby expressly give my permission to the Harbor Master, the Assistant Harbor Master or anyone lawfully designated by the Harbor Master to raise, lift, possess, transfer or otherwise handle any lobster traps, buoys, cars, wharfs, weirs, nets or any other sort of fishing gear belonging to me as the licensed owner which appears in any channel to and from any harbor which is designated by the Biddeford City Ordinance as an area in which lobster gear or fishing gear of any type is prohibited or which appears within 100 feet of any mooring in violation of an ordinance for the city of Biddeford. I further give my permission to the Harbor Master, Assistant Harbor Master or the Harbor Master's designated agent permission to remove, transfer and secure any fishing gear of any type or nature which is found in violation of any ordinance of the city of Biddeford. I further agree to pay for any and all costs related to the removal, transfer, transportation and storage of said fishing gear. Permission by me, by signing this permit, is given pursuant of Title 12, M.R.S.A. §6434.
This permit is non-transferable and is for the use of the above named boat only, except on a temporary basis at discretion of Harbor Master. The location is subject to change at any time at discretion of Harbor Master or Deputy as conditions dictate. Holder of permit is responsible to set mooring and make adjustments as required for the safety of adjacent boats. Permit numbers must be painted on mooring float in at least 3" letters of a contrasting color.
If mooring is already in place the Harbor Master/Assistant will go to location with owner to identify and approve or reassign location. If a new mooring, Harbor Master/ Assistant will inspect and oversee placement of mooring.
Any boat on a licensed mooring taking on water and in danger of sinking, the Harbor Master may authorize a private contractor to pump out said boat at the expense of the owner. The owner must pay contractor within 60 days or lose mooring privileges.
Registration form and fee must be received before March 15 and mooring in before June 30 or mooring will be considered abandoned and location reassigned, unless prior arrangements have been made with the Harbor Master.
Application permit fee $10.00 to be applied against the mooring fee.

Signed _____ Date _____

THIS PERMIT APPLICATION APPROVED BY HARBOR MASTER/ASSISTANT _____

REQUEST APPROVED YES ☐ NO ☐ DATE _____ EXPIRATION DATE_____

FEE: ~~$125~~ 180

DATE RECEIVED _____ NEXT INSPECTION DUE DATE_____

BY _____

CHECK/MONEY ORDER #_____ CASH

Whitten, Nan

From: Galbraith, David
Sent: Wednesday, June 11, 2025 9:01 AM
To: Whitten, Nan
Subject: FW: BFD Fire Boat

Please include the below email in the Planning Board packet for the 6-18-25 meeting. Thanks

---

From: Best, Lawrence <lawrence.best@biddefordmaine.org>
Sent: Tuesday, June 10, 2025 8:01 PM
To: Galbraith, David <David.Galbraith@biddefordmaine.org>
Cc: Alan Thibeault <athibeault@une.edu>
Subject: RE: BFD Fire Boat

Good Evening David,

Thank you for your email. I will answer the question of storing a Fire Boat at the UNE pier the best that I can as some of this planning began prior to me being Fire Chief here in Biddeford. There are couple different factors that I will try to explain.

First, as of today the Fire Department does not have a Fire Boat that we would store at the UNE pier. We are currently working on getting a rescue response boat that would be stored on a trailer here at the Central Firehouse. This boat would be sized to operate both above and below the dam and out into the river/bay near the Islands if needed.

However, thinking ahead to the future strategic planning of the Department for emergency coastal responses and operations, it would make sense from a rapid deployment and operational perspective, that if at some point in the future the Fire Department had a larger Fire Boat it would be beneficial for it to be located and stored at the UNE pier. This would allow for on-duty members dispatched to a coastal emergency to drive to the pier and quickly deploy the boat that is already in the water.

Please let me know if you have any questions.

Thank you

Chief Best

Lawrence D. Best
Chief of Department
Biddeford Fire Department
152 Alfred St.
Biddeford ME. 04005

Office: 207-572-1678
Mobile: 207-391-3982
Email: lawrence.best@biddefordmaine.org

From: Galbraith, David <David.Galbraith@biddefordmaine.org>
Sent: Tuesday, June 10, 2025 1:20 PM

To: Best, Lawrence <lawrence.best@biddefordmaine.org>
Cc: Alan Thibeault <athibeault@une.edu>
Subject: BFD Fire Boat

Chief, last night we held the site walk for the UNE Research Pier. During the course of conversation, UNE mentioned that, once constructed, the BFD would like to store our Fire Boat at this location. Would it be possible for you to provide a letter of support / agreement between the BFD and UNE. One of our Board members requested the letter. I have copied Alan Thibeault from UNE on this email.

I would love to provide a letter to the Board from you regarding the future use of the pier. It would be helpful if I could get the letter by next Wednesday (6-18-25) when the Board meets.
Thanks
David

David C.M. Galbraith
Deputy Director Planning and Development / City Planner
City of Biddeford
205 Main Street
Office Hours:
Monday- Tuesday 7:00 am – 5:00 pm
Wednesday- Thursday 8:00 am- 4:00 pm
Friday- Closed

CITY OF BIDDEFORD - SITE PLAN & SUBDIVISION APPLICATION DRAWING CHECKLIST *LAST REVISED: 11/26/2024*

CHECKLIST DIRECTIONS:

1. The following checklist must be completely filled out by the applicant and included on all preliminary and final Site Plan & Subdivision submittals. No checklist is required for sketch submittals.
2. Applicant to confirm all of the items listed are included within the submittal. Any missing items must have adequate reasoning to justify their absence.
3. City to review applicant's submittal and checklist responses. Projects missing substantial submittal information with non-acceptable reasoning will be rejected and required to resubmit.
4. Items in **BLACK** are required for 'Preliminary' approval & 'Final' approval.
5. Items in **BLUE** are only required for 'Final' approval.

SUBMITTAL INFORMATION - TO BE FILLED OUT BY APPLICANT	
Project Name:	University of New England (UNE) Marine Science Center Research Pier
Planning Board # (if available):	2024.34
Applicant Name/Info:	University of New England
Submittal #/Type (Prelim/Final):	Preliminary
Submittal Date:	6/10/2025

SUBMITTAL REQUIREMENT		APPLICANT RESPONSE			CITY REVIEW RESPONSE	
ITEM NUMBER	DESCRIPTION	INFORMATION PROVIDED (YES/NO)	LIST DRAWING SHEET NUMBER WHERE INFORMATION IS PROVIDED	REASON NOT PROVIDED/COMMENT	ACCEPTABLE (YES/NO-REVISE & RESUBMIT)	COMMENT
1	**GENERAL PLAN REQUIREMENTS**	YES				
A	Drawing specific legends (linetypes, hatches, etc.)	YES	C-001, C-002			
B	Individual drawing layer control should be utilized: freeze/thawing, changing lineweights, and screening (i.e. screen existing layers on a proposed plan, freeze topography and underground utilities on a proposed site plan)	YES	ALL			
C	North arrows, standard engineering scale viewports, scale bars, dated revision blocks	YES	ALL			
D	All drawings and surveys must be in the following coordinate systems: NAD83 Maine State Plane West (Horizontal) and NAVD88 (Vertical)	YES	ALL			
E	Drawings need to be designed, signed & sealed by a Maine licensed professional engineer (PE); all boundary survey data needs to be performed by a licensed professional land surveyor (PLS)	YES	ALL			
2	**COVER SHEET**	YES				
A	Project Name & Property Address	YES	G-001			
B	Project Team Contact Information (Owner, Engineer, Contractor, etc.)	YES	G-001, G-002	Contractor contact info to be added at a later date		
C	Site Location Map	YES	G-001			
D	Sheet Set List of Drawings	YES	G-001			
E	Tax Map and Lot ID	YES	C-001			
F	Zoning & Shoreland Zone Information	YES	C-001			
G	Existing Use Description	YES	C-001			
H	Proposed Use Description	YES	C-003			
I	Required Waiver/Variances (Yes/No); if yes, plan must clearly list waivers/variances requesting	YES	G-001			
J	Name of Drainage Watershed	YES	C-001			
K	Within the MS4 Urbanized Area (Yes/No)	YES	C-001			
L	Natural resources (streams, wetlands, etc.) located on-site or adjacent to the property (Yes/No)	YES	C-001			
M	Within the 100-year Flood Zone (Yes/No)	YES	C-001			
N	Public Road Proposed (Yes/No)	NO	N/A	There are no public roads onsite.		
O	Private Road Proposed (Yes/No)	YES	C-001			
P	Public Sewer Connection (Yes/No)	YES	C-001	There are no proposed improvements to the public sewer		
Q	Public Storm Drain Connection (Yes/No)	NO	N/A	There are no public storm drains onsite.		
R	Limits of Disturbance in square feet and acres	YES	C-005			
S	Pervious Land Cover square footage, existing and proposed	YES	C-003			
T	Impervious Land Cover square footage (Pavement/Gravel), existing and proposed	YES	C-003			
U	Building Roof square footage, existing and proposed	YES	C-001			
V	Assigned Planning Board Number	YES	G-001			
W	Estimated cut/fill earthwork volumes. If disturbing within the Flood Zone, a separate set of earthwork volumes required (overall site vs. within flood zone)	YES	C-007, C-007			
3	**EXISTING CONDITIONS PLAN**					
A	Horizontal & Vertical Datums annotated (NAD83 & NAVD88)	YES	C-001			
B	Property & Right-of-Way Lines	YES	C-001			
C	Boundary line information (bearings, distances, etc.)	YES	C-001			
D	Property pin and monumentation locations	YES	C-001			
E	Existing easements with proper ownership identified	YES	C-001			
F	Road Names & Individual Lot Labels (Map, Lot, Owner, Acreage)	YES	C-001			
G	Location of any Natural Resources and their respective buffers (wetlands, streams, etc.)	YES	C-001			
H	100-year Flood Zone Limits & Elevation	YES	C-001			
I	Existing contours with adequate contour labelling; minimum 1' contour interval	YES	C-001			
J	Existing building FFEs annotated	YES	C-001			
K	Spot elevations for all tie-in locations (curb cuts, property line)	YES	C-001			
L	Existing buildings & structures	YES	C-001			
M	Existing pavement areas & number of parking spaces	YES	C-001			
N	Existing ADA ramp geometry, detectable warning plates, and ADA parking spaces	YES	C-001			
O	Existing site features (sidewalks, retaining walls, curbing, lightpoles, guide rails, dumpsters, fencing)	YES	C-001			
P	Existing signage and striping	YES	C-001			
Q	Existing underground utility locations (storm, sewer, force main, water, gas, elec, tele)	YES	C-001			
R	Existing above-ground utility locations (manholes, catch basins, utility poles, hydrants, transformers, riprap)	YES	C-001			
S	Rim, invert in, invert out, pipe size, cardinal direction (N, E, S, W) information for any existing utility infrastructure being tied into (upstream/downstream/outfalls)	YES	C-001			
T	Existing tree lines, street trees, free-standing trees (12" or larger diameter at breast height), and vegetation	YES	C-001			
U	Location of any borings, drinking wells, and monitoring wells	YES	C-001			
4	**SITE DEMOLITION & EROSION CONTROL (E&SC) PLAN**					
A	Limits-of-disturbance outlined and acreage annotated	YES	C-005			
B	Location of any Natural Resources and their respective buffers (wetlands, streams, etc.)	YES	C-001			
C	100-year Flood Zone Limits	YES	C-001			
D	Callout existing site features to be demolished/removed/replaced	YES	C-002			
E	Callout existing utilities to be demolished/removed/abandoned-in-place	YES	C-002			
F	Hatch existing buildings and pavement to be removed	YES	C-002			
G	Construction Entrance location(s)	YES	C-005			
H	Perimeter E&SC control location(s) (i.e. silt fence, erosion berm mix)	YES	C-005			
I	Stockpile and staging area(s) identified (with proper perimeter control)	YES	C-005			
J	Inlet protection location(s)	YES	C-005			
K	Note requiring contractor to implement dust control measures throughout construction	YES	C-012			
L	Note requiring contractor to pave utility trenches within right-of-way within 3 days of excavation or prior to any rain event	N/A	N/A	No utilties proposed within right-of-way		
M	If groundwater expected, show dewatering/silt bag location(s); show temporary pumping routing	YES	C-014			

N	If large development is proposed with an extensive underground stormwater conveyance network, identify how SWM infrastructure and BMPs will be protected during construction and if sediment traps/basins are needed	N/A		No extensive underground SWM infrastructure is proposed.		
5	**SITE PLAN/SUBDIVISION PLAN**	YES				
A	Partial Site Plans needed for any viewport scale greater than 1"=20'	YES	C-003			
B	Existing property and right-of-way lines	YES	C-003			
C	Proposed subdivision lot lines and labels	YES	C-003			
D	Required Zoning Setbacks shown with dimensions and annotation	YES	C-003			
E	Bulk requirement summary table (zoning/parking calculations)	YES	C-003			
F	Location of any Natural Resources and their respective buffers (wetlands, streams, etc.)	YES	C-003			
G	100-year Flood Zone Limits	YES	C-003			
H	Proposed building outlines, door entrances and loading docks	YES	C-003			
I	Proposed building labels	YES	C-003			
J	Proposed road & sidewalk extents; provide clear annotation if roads will be public or private	YES	C-003			
K	Proposed parking and accessible parking locations; annotate parking space counts	YES	C-003			
L	Proposed signage, parking striping, and traffic striping	YES	C-003			
M	Detailed ADA ramp geometry, detectable warning surfaces, and ADA parking striping/signage; existing & proposed	NO		No ADA ramps or parking are proposed		
N	Proposed site features (i.e. curbing, walls, fencing, guiderail, fire hydrant, transformers, light pole locations)	YES	C-003, C-004, C-006, C-007			
O	Proposed landscaping; detailed landscaping design should be shown on separate plans	YES	C-015, C-016			
P	Designated snow storage areas	NO		No snow storage areas are proposed		
Q	Proposed dumpster locations and trash removal access	NO		No dumpsters or trash removal are proposed.		
R	Linear dimensions of all drive aisles, sidewalk widths, parking spaces, loading docks	YES	C-003, C-006, C-007			
S	Radial dimensions for all curbs, landscaped islands, sidewalks	YES	C-003			
T	Public/private road centerline stationing shown, labelled every 0+50' with curve data	YES	C-003, C-006, C-007			
U	If Private Road is proposed, final recorded plans must clearly note that proposed private roads will not be submitted in the future for public acceptance	NO		Will be provided at a later date		
V	If Private Road is proposed, final recorded plans must clearly note that the City is not responsible for any maintenance, repair, plowing, or trash removal of proposed private roads	NO		Will be provided at a later date		
W	Planning Board signature block for final recording	YES	G-001			
6	**GRADING PLAN**	YES				
A	Partial Grading Plans needed for any viewport greater than 1"=20'	YES	C-004, C-006, C-007			
B	Limits-of-disturbance outlined and acreage annotated	YES	C-004, C-006, C-007			
C	Proposed Building Labels with Individual Finished Floor Elevations (FFEs)	YES	C-004, C-006, C-007			
D	Existing contours with adequate contour labelling, screened; minimum 1' contour interval	YES	C-004, C-006, C-007			
E	Proposed contours with adequate contour labelling; minimum 1' contour interval	YES	C-004, C-006, C-007			
F	Detailed grading for all ditches, swales, outfalls, and riprap	YES	C-004, C-006, C-007			
G	All proposed contours tie-into existing contours at limits-of-disturbance outline	YES	C-004, C-006, C-007			
H	Existing spot elevations for all asphalt, curb, and SWM BMP tie-in locations	YES	C-004, C-006, C-007			
I	Location of any Natural Resources and their respective buffers (wetlands, streams, etc.)	YES	C-004, C-006, C-007			
J	100-year Flood Zone Limits	YES	C-004, C-006, C-007			
K	Proposed spot elevations for all important roadway geometric points (including but not limited to: parking/drive aisles, building corners/entrances, retaining walls, loading docks, EOP/curblines)	YES	C-004, C-006, C-007			
L	Proposed spot elevations for all ADA ramp/landing/parking stall geometry points	N/A	No new ADA proposed			
M	Proposed % slope arrows for all ADA parking spaces and sidewalks	N/A	No new parking proposed			
N	Proposed longitudinal % slope arrows for drainage ditch centerlines	YES	C-004, C-006, C-007			
O	Proposed % slope arrows for roads, parking areas, and landscape tie-in areas	YES	C-004, C-006, C-007			
P	Estimated cut/fill earthwork volumes. If disturbing within the Flood Zone, a separate set of earthwork volumes required (overall site vs. within flood zone)	YES	C-004, C-006, C-007			
7	**ROAD PROFILES (if public/private road proposed)**	YES				
A	Existing surface; dashed and screened	YES	C-006, C-007			
B	Proposed surface; continuous and bold	YES	C-006, C-007			
C	Road design speed must be clearly identified	YES	C-006, C-007			
D	Corresponding centerline stationing and curve data annotation	YES	C-006, C-007			
E	All vertical curves must identify the proposed 'K' values and confirm they meet the minimum design speed thresholds listed in AASHTO's Green Book Tables 3-35 & 3-37	YES	C-006, C-007			
F	Clear annotation if proposed road will be public or private	YES	C-006, C-007			
G	If Private Road is proposed, plans must clearly note that proposed private roads will not be submitted in the future for public acceptance	YES	C-003			
H	If Private Road is proposed, plans must clearly note that the City is not responsible for any maintenance, repair, plowing, or trash removal of proposed private roads	YES	C-003			
8	**UTILITY PLAN**					
A	Existing underground utility locations; screened (storm, sewer, force main, water, gas, electric, telecom)	YES	C-004			
B	Existing above-ground utility locations; screened (manholes, catch basins, utility poles, hydrants, riprap)	YES	C-004			
C	Rim, invert in, invert out, pipe size, cardinal direction (N, E, S, W) information for any existing utility infrastructure being tied into (upstream/downstream/outfalls)	YES	C-004			
D	Proposed underground utility locations; bold (storm, sewer, force main, water, gas, electric, telecom, lighting)	YES	C-004, ES1.1			
E	Proposed above-ground utility locations; bold (manholes, catch basins, utility poles, hydrants, transformers, riprap)	YES	C-004			
F	Proposed storm culverts, outfalls, and riprap locations and sizes	YES	C-004 to C-007			
G	Storm/sewer structure labels must include: rim, inverts in, inverts out, pipe sizes, cardinal directions (N, E, S, W)	YES	C-004 to C-007			
H	Storm/sewer pipe labels must include: linear footage, pipe size, material, slope	YES	C-004 to C-007	Additional information can be found in the SWM Report		
I	Flow directional arrows for storm & sewer pipes	YES	C-004 to C-007			
J	Proposed & existing site features shown that could conflict with proposed utilities (trees, signs, lightpoles, bollards, foundations, guiderails)	YES	C-004 to C-007			
K	All storm drains must be sized to convey the 25-year storm	YES	C-004 to C-007	See SWM Report		
L	Sewer force main sizes and invert elevations	NO	N/A	No force main proposed		
M	Sewer pump station locations, model, rim, inverts, pipe sizes, cardinal directions (N,E,S,W); additional details and hydraulic calculations required for any Public pump station proposed.	NO	N/A	No pump stations proposed		
N	Locations, sizes, and elevations of any: grease traps, oil-water separators, septic systems, drinking wells	NO	N/A	None proposed		
O	Proposed water sizes labelled	NO	N/A	None Proposed		
9	**UTILITY PROFILES**					

A	Utility profiles required for **all** gravity storm drain and sewer pipes proposed: within the right-of-way, within private or public roads, for non-driveway culverts, and for any public infrastructure tie-ins	NO	N/A	No utilties proposed in ROW		
B	Existing surface; dashed and screened	NO	N/A	No utilties proposed in ROW		
C	Proposed surface; continuous and bold	NO	N/A	No utilties proposed in ROW		
D	Storm/sewer structure labels must include: rim, inverts in, inverts out, pipe sizes, cardinal directions (N, E, S, W)	NO	N/A	No utilties proposed in ROW		
E	Storm/sewer pipe labels must include: linear footage, pipe size, material, slope	NO	N/A	No utilties proposed in ROW		
F	Existing and proposed gravity pipe crossings shown; sizes labelled and depths/clearance annotated	NO	N/A	No pipe crossing proposed		
G	Existing and proposed electric/water/telecom/gas crossings shown at approximate depths; sizes labelled and depths/clearance annotated	YES	ES1.1			
10	**DETAILS**					
A	Road section detail, including pavement/gravel depths & cross slopes	YES	C-008, C-009, C-010			
B	Sidewalk, paver, crosswalk, and any other pavement section details	N/A	None proposed			
C	Pavement sawcut & shiplap details	YES	C-003, C-006, C-007			
D	Utility trench/backfill detail	YES	C-011			
E	All site feature details; curbing, retaining walls, fencing, guiderails, dumpsters, etc.	YES	C-011, C-013, C-014			
F	Signage, striping, and ADA details	N/A	N/A	No signage or striping proposed		
G	E&S notes and details	YES	C-012, C-013, C-014			
H	Utility structure details (manholes, cleanouts, fittings, handholes, transformer pads, hydrants)	YES	C-013, C-014			
I	Storm outfall & riprap details	YES	C-011			
J	Drainage ditch cross section identifying minimum depth, minimum bed width, and maximum side slopes	NO	C-013, C-014			
K	Pump station, grease trap, oil-water separator, septic, drinking well details	N/A	N/A	None Proposed		
L	Conduit section details	N/A	N/A	None Proposed		
11	**LANDSCAPING, LIGHTING & PHOTOMETRIC PLANS**					
A	As required by ordinance; at a minimum: locations, counts, lighting models, and landscaping species must be identified	YES	C-015, C-016, ES1.1			
B	Landscaping & lighting details	YES	C-015, C-016, ES1.1			
12	**DOCUMENTS/REPORTS/CALCULATIONS**					
A	On initial preliminary submittal applications, applicant must submit a development review and inspection fee. Applicant to coordinate fee amount with City Planner prior to submittal. This fee will be drawn against to cover the following type of services throughout the project life cycle (and may require replenishing): i. 3rd Party City Peer-Review ii. Site Inspections during the permitting process iii. Erosion & Sediment Control Inspections during construction iv. Right-of-Way Inspections during construction v. Site Punchlist/As-Built Inspections post-construction	Yes				
B	Stormwater Management Report, including: 1. Predevelopment & Post-development Drainage Area Maps, including: a. Subdrainage areas delineated and labeled b. Points of Interest/Analysis shown and labeled c. Hatching for different land cover areas (impervious, pervious, gravel) within each applicable USDA soil boundary d. Time of concentration (Tc) paths & durations e. Four City-standardized stormwater summary tables 2. If any SWM water quality BMP or detention facility is proposed, hydrologic model exports/hydrographs must be submitted for the for the 2, 10, 25, & 100-year storm frequencies 3. Sizing calculations for any SWM water quality BMP or detention facility 4. A stormwater maintenance manual for any proposed SWM water quality BMP or detention facility, including: a. Annual maintenance requirements b. Annual inspection requirements by a licensed PE; noting that all inspection reports/logs need to be submitted to the Engineering Department by March 1st each following year, identifying what on-going maintenance has occurred and what remedial repairs are needed c. Signed Property Owner Agreement: including the current property owner's contact information and signature; it must be noted that all stormwater BMP maintenance requirements are linked to the property for perpetuity and transfer to any new ownership	Yes				
C	An approved 'Sewer Ability-to-Serve Letter' from the Engineering Department: i. Applicant to submit proposed sewer flow calculations per Maine's Subsurface Wastewater Disposal Rules, Chapter 241, Section 4 (Tables 4A & 4C)	N/A		No new buildings/sewer conveyance proposed		
D	A Performance Guarantee Cost Estimate utilizing Planning's template	YES				
E	For any Site Location of Development (SLODA) project, the applicant's submittal must mimic a formal submittal to DEP. Submit must abide to DEP's SLODA application and include DEP's SLODA Submittal Checklist (Form D)	YES				
F	25-year hydraulic calculations for all storm conveyance infrastructure (pipes, culverts, drainage ditches); starting tailwater conditions/documentation must be clearly identified	YES				
K	Public sewer pump station sizing calculations and maintenance plan	N/A	No pump stations proposed	No pump stations proposed		
M	Grease trap sizing calculations	N/A	No grease traps proposed	No grease traps proposed		
N	Homeowner Association (HOA) agreement for any private road serving two (2) lots or more	N/A	No HOA	No HOA		
O	Summary list & copy of any required DOT/DEP/USACE permits & approvals	YES				

CITY OF BIDDEFORD, MAINE

SHORELAND AND SITE PLAN REVIEW APPLICATION

Project:
RESEARCH PIER

Applicant:

UNIVERSITY OF NEW ENGLAND
11 HILLS BEACH ROAD
BIDDEFORD, MAINE 04005

June 9, 2025

Prepared by:

Site Design Associates
23 Whitney Way
Topsham, Maine 04086
Ph: 207-449-4275
Email: info@sitedesignassociates.biz

Site Design Associates
Consulting Engineering and Land Planning

June 9, 2025

David Galbraith, City Planner
City of Biddeford
P.O. Box 586
205 Main Street
Biddeford, ME 04005

RE: University of New England
Proposed Research Pier

Dear David and Planning Board Members:

University of New England is pleased to submit the enclosed application for site plan review and shoreland permits for a proposed research pier and floats at 11 Hills Beach Road in Biddeford. Enclosed are 10 copies of the site plan, and the following information submitted electronically per the direction from your office:

- Letter responding to May 13, 2025 staff comments – Attachment A
- Letter responding to Planning Board Member Comments - Attachment B
- City Application
- Letter of Agent Authorization
- Site Plan Drawing Checklist
- Location Map
- Deed
- Letter of Financial Capacity
- Stormwater Management Report
- Alternatives Analysis and Memo
- ACOE, DEP, and SRCC Permits
- Letter from the Maine Historic Preservation Commission clearing the project
- Notice to Proceed with external reviews from the city
- Typical shed photo
- Light fixture cuts
- Drawing Set

We understand the application fee has been paid in full.

The project is located in the city Institutional (IN) zone and the Limited Residential District shoreland zone. The project was included on the most recent version of the city approved campus master plan.

The Biddeford Campus of the University of New England (UNE), Maine's largest private university, is positioned on the confluence of the Saco River and the Atlantic Ocean. This location, along with state-of-the-art research facilities and world-class faculty, has recently earned UNE's marine programs rankings among the top 10 nationally from *Biology Explorer*, *College Choice*, and *College Magazine*. To expand UNE's unique

experiential learning and research opportunities in the marine ecosphere, the University is proposing the construction of a permanent pier which will serve as a four-season research deployment facility directly adjacent to the Arthur P. Girard Marine Science Center (GMSC) on its Biddeford campus

UNE's School of Marine and Environmental Programs, housed in the GMSC, is the academic home of 325 undergraduate and graduate students who are studying marine science, marine policy and management, as well as a wide variety of interdisciplinary fields, including marine ecosystems, conservation, restoration, business, sustainable fisheries and ecological aquaculture, social-ecological systems, and marine sustainability science. Additionally, two programs provide pathways from undergraduate to graduate degrees in Marine Sciences and Maritime Law (a 3+3 partnership with Maine Law).

Three things distinguish UNE's marine programs. The first is the oceanfront location on its core undergraduate campus, which provides direct access to the Gulf of Maine. The second is the multitude of research opportunities available to students starting as early as their first year of undergraduate studies. And the third is how the marine research done by UNE students and faculty directly impacts the people of Maine and beyond.

However, all three of these key assets are limited by the lack of year-round access to the ocean. ***The planned pier will allow students and faculty to be on the water throughout the year, thereby greatly enhancing UNE's groundbreaking research into critical problems facing Maine.***

The jewel of UNE's marine programs is Ram Island, UNE's private one-acre living laboratory two miles from campus in Saco Bay, which was gifted to the University in 2014. The island, which houses a fieldwork station and an experimental kelp farm, provides unparalleled research and field study opportunities for students and faculty. It also creates the potential to develop research partnerships that focus on critical issues facing Maine, making Ram Island home to coastal zone investigations of climate change, marine geology, invasive species, marine mammal ecology and interactions with fisheries and marine aquaculture.

Despite its prime location with direct access to the ocean, UNE currently has floating docks that are removed seasonally, precluding access to Ram Island and other areas of the Gulf of Maine in the critical winter and spring months. Construction of a permanent pier at UNE's Girard Marine Science Center will allow for dynamic, year-round, ocean-going research activities, facilitating scientific and practical exchanges with local, regional, and national marine researchers and industry partners. Additionally, the deep-water access would expand UNE's ability to serve as a collaboration hub for coastal marine and deep-water science and industry. As good stewards of the environment and our coastal neighbors, UNE is committed to ensuring that the planned structure fully adheres to local, state, and federal regulations.

Investment in UNE's marine programs is good for Maine taxpayers. With the Gulf of Maine warming faster than almost any other body of water on the planet, marine research

afforded by year-round access to the water will allow UNE to gather critical data to guide Maine's response to climate change. These expanded research opportunities will likewise enhance UNE's ability to ensure that its students graduate with the curiosity and experience to both ask and answer the important questions that will inform to the data-driven decisions impacting the expanding fields of aquaculture, fisheries, marine law and policy, marine business and entrepreneurship, ocean food systems, and related fields.

In order to determine the optimum location for the pier, an extensive alternatives analysis and studies were undertaken. This was not only for due diligence, but was required by the state and federal regulators. The regulators concluded that this exhaustive analysis was satisfactory to establish the proposed pier location. A copy of the alternatives analysis is included as Attachment 8.

The proposed facility includes the following:

1. A pile supported pier structure extending from shore into the Saco River. The proposed pier includes an approximately 130-foot long approach section extending from shore and an 80-foot long pier head section oriented roughly parallel to the direction of flow in the river. The pier consists of a concrete superstructure on steel pipe piles, with timber fender piles for vessel berthing and floating docks, and a pile supported gangway lifting beam to allow the gangway ramp to be temporarily removed from the water.
2. A floating dock system consisting of one 8-foot by 24-foot float, one 8-foot by 26-foot 10-inch float, and one 12-foot by 30-foot gangway landing float to provide all-tide vessel access for UNE's vessels on the west side of the pier, and a single 6-foot by 20-foot floating dock to provide a tie-up location for the City of Biddeford Fire Boat on the east side of the pier.
3. An 80-foot by 5-foot gangway to provide ADA compliant access to the float system.
4. An upland access road connecting the existing road at the MSC to the proposed pier, including associated site grading, drainage, and stormwater management features.

The proposed activities are described in detail in the following sections.

Pier Structure

The proposed vehicle rated pier is supported by twenty-five concrete filled steel pipe piles and a concrete abutment which connects the pier to the proposed access road. All of the piles are located beyond the Highest Annual Tide (HAT) line, while the abutment is located shoreward of the HAT line. Fourteen, 24-inch diameter steel piles support the pier head portion of the structure and eleven, 16-inch diameter steel piles support the pier approach. The seven piles at the first three pile bents at the pier approach will be socketed to ledge due to a limited soil layer above the ledge surface at these locations. The remaining piles will be driven to ledge but do not require socketing given the sufficient

depth of overburden soils. The piles support precast concrete pile caps which support precast concrete deck planks that form the pier deck surface.

The pier includes thirty, 12-inch diameter timber fender piles to provide for vessel berthing at the main face of the pier and to restrain the floating dock system. All new fender piles will be untreated timber, greenheart species. A gangway lifting beam is proposed to lift the gangway out of the water during float maintenance or in advance of severe weather. The lifting beam is supported by a steel column anchored to the pier on one side and a 10.75-inch diameter concrete filled steel pipe pile on the other.

Floating Dock System

The proposed floating dock system includes four floating docks. The three timber floats on the west side of the pier are new, while the single float on the east side of the pier is an existing float that will be relocated from UNE's facility that is located upstream of the proposed pier (note that this facility is proposed to be demolished). The new floats consist of an 8-foot by 24-foot float, an 8-foot by 26-foot 10-inch angled float, and a 12-foot by 30-foot gangway landing float. All new floats will be located on the west side of the pier approach at the south side of the pier head. The existing float is 6-feet by 20-feet and will be located on the east side of the pier approach at the south side of the pier head to provide a tie-up location for the City of Biddeford Fire Boat. The new floats are accessed by the proposed gangway or a fixed ladder, and the fireboat float is accessed solely by a fixed ladder. All the floating docks are located beyond the MLLW line and will be restrained and guided by the timber fender piles. The floats will allow vessels to tie up to the pier at any time during the tide cycle. The depths of water at the floats are adequate to meet UNE's needs.

Gangway

The 80-foot by 5-foot gangway provides ADA compliant access to the new floating dock system on the west side of the pier. The gangway connects to the pier near the beginning of the pier approach and lands on the 12-foot by 30-foot floating dock. The total indirect impact from the gangway is 357 square feet (this area excludes the portion of the gangway located above the floating dock).

Pier Building

One pier building, an 8 ft x 10 ft shed, is proposed to be located at the southeast corner of the pier head. This structure will provide storage for small equipment used by MSC staff, as well as an indoor protected location to house certain utility features such as electrical service panels.

Access Drive

Vehicular and pedestrian access to the pier will be provided by a new 20 ft wide access road that will extend from the existing GMSC access road and parking area, around the east side of the GMSC building, and to the end of the pier approach. A turnaround area is

provided adjacent to the pier approach to allow for vehicles up to and including fire trucks accessing the pier to turn around and drive forward to exit the access road. There is no parking proposed adjacent to the pier. All vehicles will use the existing parking spaces adjacent to the GMSC building. The new road will provide construction access for the project, which will help to limit the amount of work performed from the water and allow more staging to be achieved from land. The upland work will include stormwater management features that have been designed to meet Maine DEP Chapter 500 standards.

The following addresses Site Plan Approval/ Site Design Criteria and Shoreland Zoning Land Use standards for piers.

Site Plan Approval/Site Design Criteria

1. **Drainage**

   A Stormwater Management Report is attached. The report submitted demonstrates compliance with Maine Department of Environmental Protection (DEP) Basic and General standards. The project will include bioretention filters designed to DEP BMP standards for enhancement of stormwater runoff quality.

   A waiver of Article XI.II.Section 5.B.1. is required for an increase in the rate of runoff. This waiver has historically been granted by the planning board for projects located on the UNE parcel that are directly tributary to tidal receiving waters, which will be the case for this project. There will be no impact on the capacity of a receiving downgradient storm system. The bioretention filters will provide stormwater quality enhancement and cooling of runoff, as well as a level of stormwater detention. Level spreaders will be utilized to evenly distribute runoff from the bioretention filters into sheet flow. Although an increase in the rate of runoff is shown at two point locations on the drainage plans, the reality is that the stormwater runoff from the subcatchments is distributed over a wide area. Note that the peer review engineer supports this waiver.

2. **Utilities**

   Power will be fed underground to the pier from the Girard Marine Science Center.

3. **Parking**

   There will be no formal dedicated parking associated with the project.

4. **Structural Layout and Design**

a) Design of Buildings

An 8 ft x 10 ft shed is proposed on the pier. A photo in attachment 12 shows a rendering of the shed; a wood frame structure, with weather resistant siding, and a metal roof.

b) Setbacks

The research pier is sited in conformance with all setback requirements.

c) Fire Protection & Safety

Based on input from the fire department, the road width was increased to 20 ft per NFPA standards. The turnaround meets the city required dimensional standards and has been modelled to accommodate fire apparatus.

d) Landscaping

The revegetation plan has been developed to meet the City of Biddeford's Shoreland Zoning requirements as well as to preserve a visual buffer for the access drive to minimize visibility from the water to the greatest extent possible, while achieving the required clearing and considering functional requirements such as snow plowing at the turnaround. The revegetation plan also meets requirements of the Saco River Corridor Commission (SRCC) who has issued a permit for the project.

Revegetation Plan

The revegetation plan, drawing C-15, is intended to meet the city of Biddeford's shoreland zoning requirements. Details are as follows:

- 49 trees are being removed with 21 of those within the 50-foot HAT setback
- Approximately 5,850 SF of understory duff later and low growth vegetation (predominantly non-native invasive honeysuckle) is being disturbed within 50 feet of the HAT.
- 5 tree species are proposed in approximate equal quantities with the evergreen trees located between the road shoulder grading and the top of embankment where they are anticipated to fit under the remaining mature forest canopy, and between existing trees and ledge. Field verification during construction will be required to ensure final plant locations are feasible if shallow ledge or significant remaining tree root stock is present.
- 3 shrubs (2 evergreen and 1 deciduous) are proposed to plant at the toe of the road embankment as well as in areas around the turnaround where fitting larger trees will be challenging given limited space and the need to maintain an area for plowed snow.
- Deciduous trees are spread throughout the area.

- The bioretention cells will be filled with a mix of wet, drought and salt tolerant shrubs and perennials which are shown on the plan as a hatched area. The notes on the plan and drawing C-16 plant schedule describe the random pattern mixing of these plants throughout the bio retention cells.
- All other disturbed areas will be planted with a native roadside mix of perennial grasses and flowers. It is recommended that this area be mowed once a year in the fall to maintain the mix of plants. If mowed more often, it will revert to mostly lawn grasses.
- Mature plant sizes are listed on the plant list to give a sense of the amount of screening that may occur over time.

e) Service, Storage, and Utility Areas

Not applicable

f) Paving, Parking, and Storage Areas

No paving, parking, or storage is located within the side or rear setback of the property, nor within the front setback of the property.

g) Handicapped Accessibility

The pier is designed to meet ADA requirements.

h) Loading Facilities

Not applicable.

i) Parking, Loading, and Protective Buffers

The non-vegetated area of the land being developed will be less than 75% and a minimum of 25% of the land area being developed either remains in its natural state or consists of landscape and lawn areas.

j) Open Space

Not applicable.

k) External Lighting

An electrical site plan is included in the drawing set which shows the site lighting. Full cut off fixtures will be utilized and lighting will be the minimum necessary for safety and functionality.

l) Signs

Not applicable.

m) Historic and Archeological Resources.

See attachment 10 for a letter from the Maine Historic Preservation Commission clearing the project.

Shoreland Zoning Land Use Standards

The project will comply with the applicable standards of Article XIV. Section 15.C.

- Access from shore will be developed on soils appropriate for the use. A detailed erosion control plan has been prepared for the project.
- The location does not interfere with existing beach areas.
- The facility has been located to minimize adverse effects on fisheries. The plan was reviewed be the National Marine Fisheries Service.
- The facility size is the minimum necessary to carry out current and future research activities, and is consistent with the surrounding character and uses of the area, including the Camp Ellis pier on the opposite side of the river.
- An 8 ft x 10 ft shed for storage of life jackets, tools, research equipment is proposed on the pier, and is an operational necessity. The shed will not exceed 20 ft in height.

Waivers:

Four waivers are requested:

- Article XI. II. Section 5.B.1.a. – The rate of post development runoff shall not exceed that of pre-development. As noted in the cover letter for the previous submission, this waiver has historically been granted by the planning board for projects located on the UNE parcel that are directly tributary to tidal receiving waters, which will be the case for this project. There will be no impact on the capacity of a receiving downgradient storm system. The bioretention filters will provide stormwater quality enhancement and cooling of runoff, as well as a level of stormwater detention. Level spreaders will be utilized to evenly distribute runoff from the bioretention filters into sheet flow. Although an increase in the rate of runoff is shown at two point locations on the drainage plans, the reality is that the stormwater runoff from the subcatchments is distributed over a wide area.

  Note that the peer review engineer has indicated support for this waiver.

- Article XI.II. Section 5.B.1.e.3. - No slope shall be created which results in a slope of more than two feet horizontal to one foot vertical unless proper retaining walls are proposed. The design includes slopes which exceed this standard in ledge (1/4H:1V) and along the drive (1H:1V). This waiver has been requested by UNE and granted by the planning board for all projects proposed by UNE on the campus due to the presence of ledge and the desire to

minimize impacts of construction on adjacent areas. Based on our experience the ledge in the area is stable at steeper slopes. Turf reinforcement matting specifically designed to stabilize steeper slopes will be utilized along the drive sideslopes.

- Article VI. Section 26.F. - No cut or fill slopes that exceed 3 horizontal to 1 vertical. See above for justification.

- Article XIV. Section 15.H.4. Road and driveway banks shall be no steeper than a slope of two horizontal to one vertical, and shall be graded and stabilized in accordance with the provisions for erosion and sedimentation control contained in Section 15T. See above for justification for steeper slopes. The erosion control specified for the project exceeds the standards of Section 15T.

We are in hopes the planning board will find that the proposal is consistent with city regulations and approval standards. We look forward to meeting with the planning board on June 18.

If you have any questions or comments, please contact me.

Sincerely,
Site Design Associates

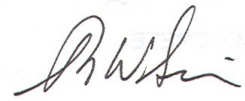

Tom Saucier, P.E.
President

cc: Alan Thibeault, UNE, Vice President for University Operations

Attachment A
Letter responding to May 13, 2025 staff comments

Site Design Associates
Consulting Engineering and Land Planning

June 9, 2025

David C.M. Galbraith, City Planner
City of Biddeford
P.O. Box 586
205 Main Street
Biddeford, ME 04005

RE: University of New England
Proposed Research Pier

Dear David and Planning Board Members:

On behalf of University of New England (UNE), Site Design Associates (SDA) is pleased to submit this response to staff and peer review comments dated May 13, 2025. The comments are included below in italics, with our responses.

A. Staff Review Comments

Comment: *The Preliminary Application shall include copies of the required notification letters provided to the various Native American Tribes listed above in Section 3*

Response: **The letters to the tribes, the plan included with the letters, the certified mail receipts, and the two responses received are attached at the end of this letter. This information was included in the DEP NRPA, ACOE and Harbor Master applications previously submitted to the city. In all cases the information was deemed complete and the DEP and ACOE permits issued.**

Note that the plan that was included with the letters reflected the pier in the currently proposed location. The purpose of the request for tribal review is to give them the opportunity to review the location of proposed projects to verify whether the proposed development would affect known properties of religious and/or cultural significance. It is not intended to seek approval of any design.

Comment: *Limited information was provided by the Applicant on the checklist. Applicant should fully complete the checklist for the next submission, including column D (list drawing sheet number where information is provided) and* column E (reason not provided/comment).

23 Whitney Way – Topsham, Maine 04086
Phone: (207) 449-4275 email: info@sitedesignassociates.biz

Response:

An updated copy of the checklist is provided with this submission.

Comment:

Section 74-35 Construction of Wharf, Pier, or Landing Regulated states that new piers require permission from the Harbormaster

Response:

Refer to the attached letter addressing the Planning Board Members comments.

Comment:

Section 74-36 Floats requires permission from the Harbormaster for floats that are an integral part of a pier.

Response:

Section 74-36 is not applicable to this project. Section 74-36 addresses floats that are *not* an integral part of a pier.

Comment:

The application lists two (2) project waivers being sought. The application didn't include a narrative or rational for Staff or the Board to evaluate the requested waivers. This information shall be included in the Preliminary application package.

Response:

Four waivers are requested:

- **Article XI. II. Section 5.B.1.a. – The rate of post development runoff shall not exceed that of pre-development. As noted in the cover letter for the previous submission, this waiver has historically been granted by the planning board for projects located on the UNE parcel that are directly tributary to tidal receiving waters, which will be the case for this project. There will be no impact on the capacity of a receiving downgradient storm system. The bioretention filters will provide stormwater quality enhancement and cooling of runoff, as well as a level of stormwater detention. Level spreaders will be utilized to evenly distribute runoff from the bioretention filters into sheet flow. Although an increase in the rate of runoff is shown at two point locations on the drainage plans, the reality is that the stormwater runoff from the subcatchments is distributed over a wide area.**

  Note that the peer review engineer has indicated support for this waiver.

- **Article XI.II. Section 5.B.1.e.3. - No slope shall be created which**

results in a slope of more than two feet horizontal to one foot vertical unless proper retaining walls are proposed. The design includes slopes which exceed this standard in ledge (1/4H:1V) and along the drive (1H:1V). This waiver has been requested by UNE and granted by the planning board for all projects proposed by UNE on the campus due to the presence of ledge and the desire to minimize impacts of construction on adjacent areas. Based on our experience the ledge in the area is stable at steeper slopes. Turf reinforcement matting and geosynthetic reinforcement specifically designed to stabilize steeper slopes will be utilized along the drive sideslopes.

- **Article VI. Section 26.F. - No cut or fill slopes that exceed 3 horizontal to 1 vertical. See above for justification.**

- **Article XIV. Section 15.H.4. Road and driveway banks shall be no steeper than a slope of two horizontal to one vertical, and shall be graded and stabilized in accordance with the provisions for erosion and sedimentation control contained in Section 15T. See above for justification for steeper slopes. The erosion control specified for the project exceeds the standards of Section 15T.**

B. Peer Review Comments

Comment:

The Fire Department has expressed that the length of the turnaround does not meet their needs of a 70- foot-long turnaround at the end of the access road. The provided turnaround is approximately 40 feet long.

Response:

We analyzed the turning movements of the aerial apparatus and the results were provided to E. Dexter, Ass. Chief BFD for review. The results demonstrate there is adequate space for the aerial apparatus to maneuver. Additionally, we have adjusted the location of the security gate on the pier to provide additional space for turning maneuvers. We have enclosed an updated Vehicle Circulation Exhibit to convey the safe turn around of an emergency vehicle, at the end of this letter.

E. Dexter has indicated the design could be approved with a condition of approval that both Truck 32 and SH-34 are able to maneuver the turnaround post construction, and prior to final sign off they should be taken to the location for testing.

Mandating a turnaround larger than that shown would result in more clearing of trees and more impervious surface in the shoreland zone adjacent to the river, neither of which would be looked at favorably by the regulators if an alternative exists. The regulators had asked whether a narrower drive could be provided and we indicated that NFPA rules require 20 ft of width.

Comment:

Access road width has been increased to 20 feet, as requested by the Fire Department.

Response:

Acknowledged.

Comment:

Additional coordination items for the City are indicated within the Review Comments below in red font.

Response:

Acknowledged.

Comment:

Section 74-35 Construction of Wharf, Pier, or Landing Regulated states that new piers require permission from the Harbormaster.

Response:

Refer to response above.

Comment:

Section 74-36 Floats requires permission from the Harbormaster for floats that are an integral part of a pier.

Response:

Refer to response above.

Comment:

What erosion and sedimentation controls will be utilized for the construction of the pier abutment and pier? A turbidity curtain detail is included and assumed to be used for the pier but the location of this is not shown in plan view.

Response:

Turbidity from the project is anticipated to be limited and temporal associated with the installation of piles for the pier. Neither the State or Federal permits require the use of a turbidity curtain. The turbidity curtain detail has been removed from the plans. Areas of upland soil disturbance will utilize erosion

control BMP's as identified in the Erosion Control Notes and Details on sheets C-012, C-013, and C-014.

Comment:

A stabilized construction entrance, silt fence, biodegradable stabilization matting, and plunge pool are proposed for the construction of the proposed access road.

Response:

Acknowledged.

Comment:

A revegetation plan has been submitted showing tree, shrub, and perennial plantings within the shoreland zone and upland areas. The plan has been reviewed and approved by the Saco River Corridor Commission.

Response:

Acknowledged.

Comment:

The Inspection and Maintenance Plan of Stormwater Management Facilities includes a recertification requirement, which includes a five-year recertification to Maine DEP. This reference should be removed, since there is no DEP Stormwater Permit.

Response:

We have removed the language regarding the recertification to Maine DEP from the Inspection and Maintenance Plan.

Comment:

See Land Development Regulations, Article XI Site Plan Review, comments 1-5 below. A waiver of Section 61.A.12 will also be required.

Response:

We are unclear regarding the referenced section, since there is no section 61 in Article XI. If the intent was to reference Article VI, section 61.A.1-2 we do not believe a waiver is required. All new construction and development, is designed to reflect or resemble, as nearly as possible, natural runoff conditions in terms of volume, velocity and location of runoff. As noted previously, the rate of runoff after development will slightly exceed predevelopment runoff conditions, and the impact was evaluated in terms of potential soil erosion and sedimentation, drainage capacity, and the land use/land cover characteristics. The impact was determined to be minimal; therefore, a waiver of Article XI.

II. Section 5.B.1.a. was requested, which is supported by the peer review engineer.

Comment:

Subsection A states that any project involving parcels of land of greater than five acres, or any portion of a larger parcel greater than five acres, shall be required to conduct a wildlife study by a certified wildlife biologist. This provision may be waived, if a letter from the Maine Department of Inland Fisheries and Wildlife (MDIFW) indicates there are no significant habitat areas involved in the project area or abutting adjacent land. The Maine DEP Natural Resource Protection Act (NRPA) permit states that "according to the Department s Geologic Information System (GIS) database there are no mapped Essential or Significant Wildlife Habitats at the site. The Maine Department of Inland Fisheries and Wildlife (MDIFW) reviewed the proposed project and stated that the project is located adjacent to but outside of Tidal Waterfowl and Wading Bird Habitat (TWWH), a designated significant wildlife habitat. MDIFW stated that minimal impacts to piping plover and Blanding's turtle habitat are anticipated and provided general recommendations including minimizing vegetation removal and soil disturbance, and that time spent in the water should be minimized to the greatest extent practicable." Given the supporting information in the NRPA permit, we believe this requirement is met.

Response:

Acknowledged.

Comment:

The applicant has requested a waiver of Article XI.II Section 5.B.1 to allow a small increase in peak stormwater runoff rates. The applicant has stated they are requesting this waiver since stormwater discharges directly to a tidal receiving water and there will be no impact on a downgradient storm system. Since there's only a small increase in peak runoff rate and Chapter 500 does allow for a waiver of this requirement for sites discharging to coastal wetlands/rivers, we recommend granting this waiver.

Response:

Acknowledged.

Comment:

Bioretention systems are proposed to provide stormwater treatment. 76% of the new impervious area and 72% of the new developed area are treated, which meets the Maine DEP General Standard water quality treatment requirements for linear developments.

Response:

Acknowledged.

Comment:

The Grading and Drainage Plan and HydroCAD model refers to the stormwater treatment practices as Bioretention Filter Cells; however, the details for stormwater practices refer to them as Grassed Underdrained Soil Filters. All notations should be updated to be consistent between plan, details, and model.

Response:

We have revised the plans, details, and hydrology model for consistency. Moving forward, these BMPs will be referred to as Bioretention Filter Cells.

Comment:

A detail should be included in the plans for the 3' diameter catch basin with beehive grate.

Response:

We have revised the plans to include the details mentioned above. The Bioretention Filter Cell detail has been revised to call out an ADS Nyloplast Drain Basin (See Sheet C-103) and the ADS Nyloplast 18" Drain Basin W/Beehive Grate Detail can be found on Sheet C-014.

Comment:

The 3' diameter catch basins are modeled with 18" horizontal orifices (beehive grates). The Grassed Underdrained Soil Filter detail and Granding and Drainage Plan show the beehive grate as the entire catch basin diameter. Please clarify what size the grate is and update the plans and model as needed.

Response:

See response above.

Comment:

The applicant has requested a waiver of Article XI.II Section 5.B.1.e.3 to allow for slopes steeper than 2:1 because of ledge. 1:1 vegetated reinforced slopes are proposed where there is no ledge and 1:10 max slopes are proposed where there is ledge.

Has the ledge cut been reviewed by a geotechnical engineer for stability?

Additional information about the vegetated reinforced slopes is

needed. A 1:1 slope is steep and difficult to vegetate, even with matting. The slope detail on C-013 shows horizontal lines into the slope that are not labeled. Are these additional stabilization measures?

Article XIV, 15.H.4 also prohibits road and driveway banks to be steeper than 2:1, and a waiver would be needed based on the proposed slopes.

Response:

The proposed ledge cuts reflect the same conditions used along the existing access road to the Marine Science Center which has been in place and stable for over 20 years. Conditions will be reviewed in the field by a geotechnical engineer and any loose material will be removed to result in a stable finished slope which may be between 1:1 and 1:10 depending on the conditions encountered.

The slope protection has been specified as a turf reinforcement mat, suitable for stabilization of the slopes shown. Additionally, geosynthetic reinforcement will be incorporated into the reinforced slope to provide stability. Details will be incorporated into the final construction plans for the project.

A waiver of article XIV. Section 15.H.4. has been requested. See previous discussion.

Comment:

North arrow provided on C-006 is incorrect and should be reoriented.

Response:

We have revised the north arrow on Sheet C-006 to properly show the orientation of the drawing.

Comment:

Proposed spot grades along access road do not match proposed contours or vertical profile. For example, see Sta. 4+00. All proposed elevations should correlate between plan view, profile view, cross sections.

Response:

We have revised the plans, profiles, and cross-sections to properly correlate between the sheets.

Comment:

Typical Section provided on sheet C-008 shows the 1:1 embankment starting behind the proposed guardrail. However, Plan View (C-006/007) shows the 1:1 embankment starting in front of the guardrail. The typical section and

plan view should correlate. Additionally, an adequate guardrail "shelf" should be provided behind the guardrail posts for support.

Response:

Plans have been revised such that the guardrail is within the shelf that is above the 1:1 reinforced slope.

Comment:

Vertical curve data is only partially shown in the access road profile (C-006/007). Adjust viewports so all data is legible.

Response:

Plan sheets have been corrected to show all vertical curve data.

Comment:

Proposed pipes missing from access road profile (C-006/007) and storm drain callouts/leader lines pointing to incorrect location. Clarify where storm drain pipes are in profile.

Response:

We have revised the viewports in Sheets C-006 and C-007 to properly show storm drain pipes in the access road profiles.

Comment:

Article XIV, 15.H.1 requires roads and driveways within the shoreland zone to be set back at least 100 feet, horizontal distance, from the normal high-water line of a great pond classified GPA or a river that flows to a great pond classified GPA, and 75 feet, horizontal distance, from the normal high-water line of other water bodies, tributary steams, or the upland edge of a wetland unless no reasonable alternative exists as determined by the Planning Board. However, Section 15.H.1 does not apply to roads or driveways that provide access permitted structures and facilities located nearer to the shoreline due to operational necessity. Since the pier is a permanent structure with operational necessity to the shoreline and the access road is providing access to the pier, we believe the proposed access road is allowed by the Ordinance.

Response:

Acknowledged.

Comment:

The pier is proposed in the Institutional (IN) zone and Limited Residential (LR) shoreland zoning overlay district. An 8'x10' shed is also proposed on the pier to store life jackets, tools, and research equipment and is stated to be an operational necessity. Although the Shoreland Zoning Ordinance does not allow structures within 75' of the normal high-water line in the Limited Residential overlay district, the setbacks do not apply to structures that are

an operational necessity for direct water access. Based on the information provided, we believe the proposed structure is allowed by the Ordinance.

Response:

Acknowledged.

Comment:

The cover letter for the application indicates the plan was reviewed by the National Marine Fisheries Service. Have review comments from the National Marine Fisheries Service been provided to the City?

Response:

The Army Corps of Engineers requests comments and input from NMFS as a component of their review. The comments we received were verbal during a Teams meeting with NMFS and the ACOE on February 5, 2025. The meeting was held to discuss whether construction activity and/or the project would be likely to affect Atlantic Sturgeon, and how to best go about making that determination. The final determination made as a result of that meeting was that the project was not likely to adversely affect Atlantic Sturgeon, and the ACOE permit was issued.

Comment:

A submerged lands lease or easement is required for structures, such as piers, located on publicly-owned submerged lands. Has a submerged lands lease or easement been secured for the project through the Maine Department of Agriculture, Conservation & Forestry, Bureau of Parks and Lands.

Response:

We will be requesting that the planning board condition any approval on receiving a submerged lands lease from the Submerged Lands Program.

Comment:

Applicant should provide comments about how the pier and shed comply with Article XII Floodplain Management Ordinance requirements and specifically Section R, Coastal Floodplains. Please be sure to include how pier, shed, and utility elevation were selected and if sea level rise was considered.

Response:

It is not clear to us that the Floodplain Management Ordinance is applicable to the pier and floats. From the code: The City of Biddeford has chosen to become a participating community in the National Flood Insurance Program and agreed to comply with the

requirements of the National Flood Insurance Act of 1968, through the establishment of its Floodplain Management Ordinance. The National Flood Insurance Act of 1968, which established the National Flood Insurance Program (NFIP), primarily focuses on insuring improved real property or mobile homes located within designated Special Flood Hazard Areas (SFHA). Essentially, the program covers structures that are walled and roofed, principally above ground, and affixed to a permanent site. This includes residential, industrial, commercial, and agricultural buildings. Piers and floats, specifically those used for "boat-related purposes", are generally not covered under the NFIP standard flood insurance policy.

In regards to compliance with section R, Coastal Floodplains:

- **The bottom of all electrical work and permanent fixtures and components, will be elevated to at least one foot above the base flood elevation.**
- **The bottom of the shed will be 4 feet above the base flood elevation.**
- **The project was designed by a professional engineer.**

Regarding sea level rise, GEI conducted a flood risk analysis to assess the potential exposure of the pier to floodwaters in current conditions and under various scenarios of Sea Level Rise that may potentially occur throughout the structure life. For the analysis, GEI utilized the scenarios put forth by the Maine Climate Council (MCC) in their 2020 report "Maine Won't Wait: A Four-Year Plan for Climate Action." The MCC recommends consideration of sea level rise based on two separate scenarios:

- **Commit to Manage Scenario – This reflects the "intermediate" sea level rise curve from the 2017 NOAA model, with a relative sea level rise of 3.9 feet in 2100 (relative to 2000 mean sea level)**
- **Prepare to Manage – This reflects the "high" sea level rise curve from the 2017 NOAA model, with a relative sea level rise of 8.8 feet in 2100 (relative to 2000 mean sea level)**

Sea level rise curves published in the referenced MCC report are shown below for reference:

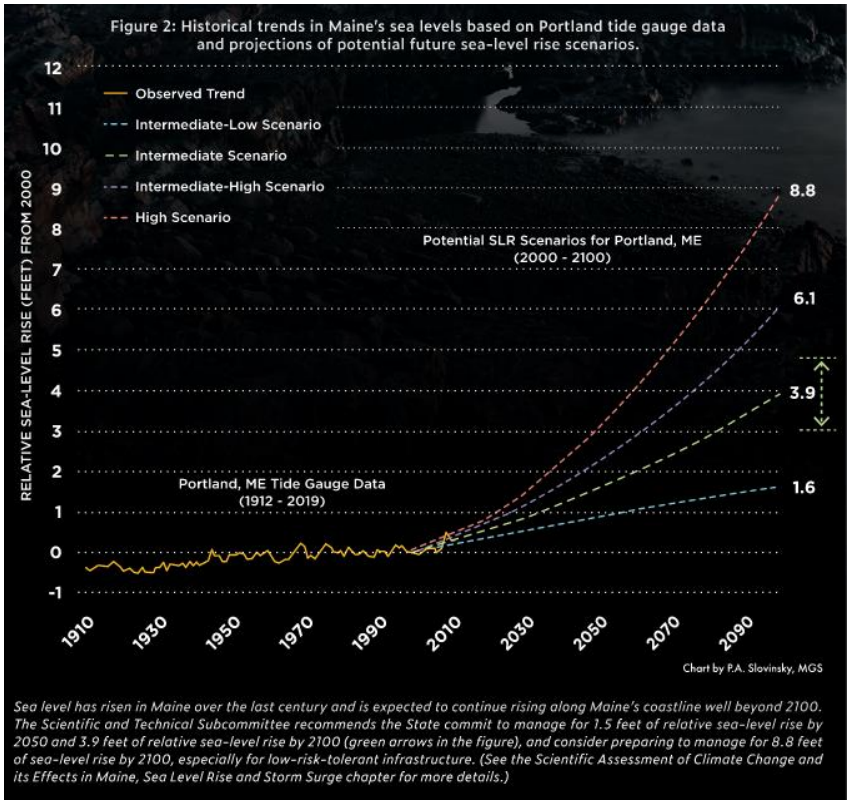

GEI uses these scenarios to project future water elevations throughout the tidal range and in flood/storm events, throughout the design life of the structure, and compares those elevations to the proposed elevations of various assets to assess the level of risk from exposure to floodwaters.

The design life for the pier is assumed to be approximately 75 years, so the end of life would be approximately 2100. GEI has designed the structure for uplift and lateral loading assuming water elevations associated with the storm surge and wave action during 100-year recurrence interval coastal storm events under the Commit to Manage scenario. This reflects an appropriate design condition that reasonably balances structure risk throughout the design life, project functionality, adjacent site impacts, and project cost. The pier is designed to accommodate conditions through the end of life under the Commit to Manage scenario (3.9 feet of SLR).

Comment:

The cover letter for the application indicates the plan was reviewed by the National Marine Fisheries Service. Have review comments from the National Marine Fisheries Service been provided to the City?

Response:

The Army Corps of Engineers requests comments and input from NMFS as a component of their review. The comments we received were verbal during a Teams meeting with NMFS and the ACOE on February 5, 2025. The meeting was held to discuss whether construction activity and/or the project would be likely to affect Atlantic Sturgeon, and how to best go about making that determination. The final determination made as a result of that meeting was that the project was not likely to adversely affect Atlantic Sturgeon, and ACOE issued their permit.

Comment:

Article XIV, 15.H.1 requires roads and driveways within the shoreland zone to be set back at least 100 feet, horizontal distance, from the normal high-water line of a great pond classified GPA or a river that flows to a great pond classified GPA, and 75 feet, horizontal distance, from the normal high-water line of other water bodies, tributary steams, or the upland edge of a wetland unless no reasonable alternative exists as determined by the Planning Board. However, Section 15.H.1 does not apply to roads or driveways that provide access to permitted structures and facilities located nearer to the shoreline due to operational necessity. Since the pier is a permanent structure with operational necessity to the shoreline and the access road is providing access to the pier, we believe the proposed access road is allowed by the Ordinance.

Response:

Acknowledged.

Comment:

The pier is proposed in the Institutional (IN) zone and Limited Residential (LR) shoreland zoning overlay district. An 8'x10' shed is also proposed on the pier to store life jackets, tools, and research equipment and is stated to
be an operational necessity. Although the Shoreland Zoning Ordinance does not allow structures within 75' of the normal high-water line in the Limited Residential overlay district, the setbacks do not apply to structures that are an operational necessity for direct water access. Based on the information provided, we believe the proposed structure is allowed by the Ordinance.

Response:

Acknowledged.

Comment:

A submerged lands lease or easement is required for structures, such as piers, located on publicly-owned submerged lands. Has a submerged lands lease or easement been secured for the project through the Maine Department of Agriculture, Conservation & Forestry, Bureau of Parks and Lands?

Response:

We will be requesting that the planning board condition any approval on receiving a submerged lands lease from the Submerged Lands Program.

In closing, we note that based on the city staff report dated May 13, 2025 staff found the application satisfies the City's Shoreland Zoning Ordinance and Site Plan criteria.

We believe that City Staff and Planning Board will also find that the project conforms to the UNE Institutional Zone Master Plan submission, with regards to the project location, design, and applicable standards. We believe we have satisfactorily addressed staff comments. If you have any additional questions or comments, or require additional information, please do not hesitate to contact Alan Thibeault, (602-2253) or me (449-4275).

We look forward to meeting with the Planning Board on June 18 to further discuss this project.

Sincerely,
Site Design Associates

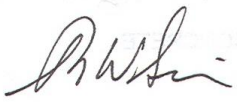

Tom Saucier, P.E.
President

cc: Alan Thibeault, UNE, Vice President for University Operations

Site Design Associates
Consulting Engineering and Land Planning

April 10, 2023

THPO and Environmental Planner
Houlton Band of Maliseet Indians
88 Bell Road
Littleton, Maine 04730

RE: Proposed Marine Science Center Pier
11 Hills Beach Road
Biddeford, Maine

On behalf of our client, University of New England (UNE), we are assisting with the preparation of Maine Department of Environmental Protection Natural Resources Protection Act and U.S. Army Corps of Engineers Permit applications. The applications are for the installation of a permanent pier and float system on UNE's campus at 11 Hills Beach Road in Biddeford.

This letter and the enclosed materials serve as a means to notify you of the project and give you an opportunity to determine whether the proposed development would affect properties of religious and/or cultural significance. If the Tribe has concerns in this area, please notify us by letter to the address below, contact me at 207-449-4275 or via email at tsaucier@sitedesignassociates.biz.

Thank you for your assistance and the generosity of your time to review this project in reference to the Tribe's concerns.

Sincerely,

Site Design Associates

Tom Saucier, P.E.
President

Enclosures

23 Whitney Way Topsham, Maine 04086
Phone: (207) 449-4275 email: info@sitedesignassociates.biz

Site Design Associates
Consulting Engineering and Land Planning

April 10, 2023

THPO
Aroostook Band of Micmacs
7 Northern Road
Presque Isle, ME 04769

RE: Proposed Marine Science Center Pier
11 Hills Beach Road
Biddeford, Maine

On behalf of our client, University of New England (UNE), we are assisting with the preparation of Maine Department of Environmental Protection Natural Resources Protection Act and U.S. Army Corps of Engineers Permit applications. The applications are for the installation of a permanent pier and float system on UNE's campus at 11 Hills Beach Road in Biddeford.

This letter and the enclosed materials serve as a means to notify you of the project and give you an opportunity to determine whether the proposed development would affect properties of religious and/or cultural significance. If the Tribe has concerns in this area, please notify us by letter to the address below, contact me at 207-449-4275 or via email at tsaucier@sitedesignassociates.biz.

Thank you for your assistance and the generosity of your time to review this project in reference to the Tribe's concerns.

Sincerely,

Site Design Associates

Tom Saucier, P.E.
President

Enclosures

23 Whitney Way Topsham, Maine 04086
Phone: (207) 449-4275 email: info@sitedesignassociates.biz

Site Design Associates
Consulting Engineering and Land Planning

April 10, 2023

THPO
Passamaquoddy Tribe of Indians
Pleasant Point Reservation
PO Box 343
Perry, Maine 04667

RE: Proposed Marine Science Center Pier
11 Hills Beach Road
Biddeford, Maine

On behalf of our client, University of New England (UNE), we are assisting with the preparation of Maine Department of Environmental Protection Natural Resources Protection Act and U.S. Army Corps of Engineers Permit applications. The applications are for the installation of a permanent pier and float system on UNE's campus at 11 Hills Beach Road in Biddeford.

This letter and the enclosed materials serve as a means to notify you of the project and give you an opportunity to determine whether the proposed development would affect properties of religious and/or cultural significance. If the Tribe has concerns in this area, please notify us by letter to the address below, contact me at 207-449-4275 or via email at tsaucier@sitedesignassociates.biz.

Thank you for your assistance and the generosity of your time to review this project in reference to the Tribe's concerns.

Sincerely,

Site Design Associates

Tom Saucier, P.E.
President

Enclosures

23 Whitney Way Topsham, Maine 04086
Phone: (207) 449-4275 email: info@sitedesignassociates.biz

Site Design Associates
Consulting Engineering and Land Planning

April 10, 2023

THPO
Passamaquoddy Tribe of Indians
Indian Township Reservation
PO Box 301
Princeton, Maine 04668

RE: Proposed Marine Science Center Pier
11 Hills Beach Road
Biddeford, Maine

On behalf of our client, University of New England (UNE), we are assisting with the preparation of Maine Department of Environmental Protection Natural Resources Protection Act and U.S. Army Corps of Engineers Permit applications. The applications are for the installation of a permanent pier and float system on UNE's campus at 11 Hills Beach Road in Biddeford.

This letter and the enclosed materials serve as a means to notify you of the project and give you an opportunity to determine whether the proposed development would affect properties of religious and/or cultural significance. If the Tribe has concerns in this area, please notify us by letter to the address below, contact me at 207-449-4275 or via email at tsaucier@sitedesignassociates.biz.

Thank you for your assistance and the generosity of your time to review this project in reference to the Tribe's concerns.

Sincerely,

Site Design Associates

Tom Saucier, P.E.
President

Enclosures

23 Whitney Way Topsham, Maine 04086
Phone: (207) 449-4275 email: info@sitedesignassociates.biz

Site Design Associates
Consulting Engineering and Land Planning

April 10, 2023

THPO
Penobscot Nation
Cultural and Historic Preservation Dept.
12 Wabanaki Way
Indian Island, Maine 04468

RE: Proposed Marine Science Center Pier
11 Hills Beach Road
Biddeford, Maine

On behalf of our client, University of New England (UNE), we are assisting with the preparation of Maine Department of Environmental Protection Natural Resources Protection Act and U.S. Army Corps of Engineers Permit applications. The applications are for the installation of a permanent pier and float system on UNE's campus at 11 Hills Beach Road in Biddeford.

This letter and the enclosed materials serve as a means to notify you of the project and give you an opportunity to determine whether the proposed development would affect properties of religious and/or cultural significance. If the Tribe has concerns in this area, please notify us by letter to the address below, contact me at 207-449-4275 or via email at tsaucier@sitedesignassociates.biz.

Thank you for your assistance and the generosity of your time to review this project in reference to the Tribe's concerns.

Sincerely,

Site Design Associates

Tom Saucier, P.E.
President

Enclosures

23 Whitney Way Topsham, Maine 04086
Phone: (207) 449-4275 email: info@sitedesignassociates.biz



U.S. Postal Service™
CERTIFIED MAIL® RECEIPT
Domestic Mail Only

For delivery information, visit our website at www.usps.com®.

Perry, ME 04667

OFFICIAL USE

Certified Mail Fee $4.15
$3.35
0086 7

Extra Services & Fees (check box, add fee as appropriate)
- Return Receipt (hardcopy) $0.00
- Return Receipt (electronic) $0.00
- Certified Mail Restricted Delivery $0.00
- Adult Signature Required $0.00
- Adult Signature Restricted Delivery $

Postage $0.87

Postmark Here

04/11/2023

Total Postage THPO $8.37

Sent To Passamaquoddy Tribe of Indians
Street and Apt. Pleasant Point Reservation
City, State, Z PO Box 343
Perry, ME 04667

PS Form 3800, April 2015 PSN 7530-02-000-9047 See Reverse for Instructions

7022 1670 0001 0356 2178

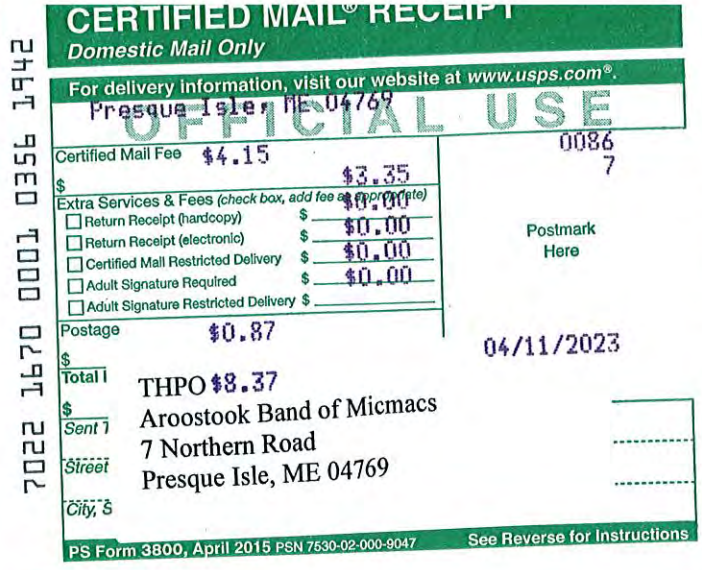

U.S. Postal Service™
CERTIFIED MAIL® RECEIPT
Domestic Mail Only

For delivery information, visit our website at www.usps.com®.

Presque Isle, ME 04769

OFFICIAL USE

Certified Mail Fee $4.15
$3.35
0086 7

Extra Services & Fees (check box, add fee as appropriate)
- Return Receipt (hardcopy) $0.00
- Return Receipt (electronic) $0.00
- Certified Mail Restricted Delivery $0.00
- Adult Signature Required $0.00
- Adult Signature Restricted Delivery $

Postage $0.87

Postmark Here

04/11/2023

Total Postage THPO $8.37

Sent To Aroostook Band of Micmacs
Street 7 Northern Road
City, S Presque Isle, ME 04769

PS Form 3800, April 2015 PSN 7530-02-000-9047 See Reverse for Instructions

7022 1670 0001 0356 1942

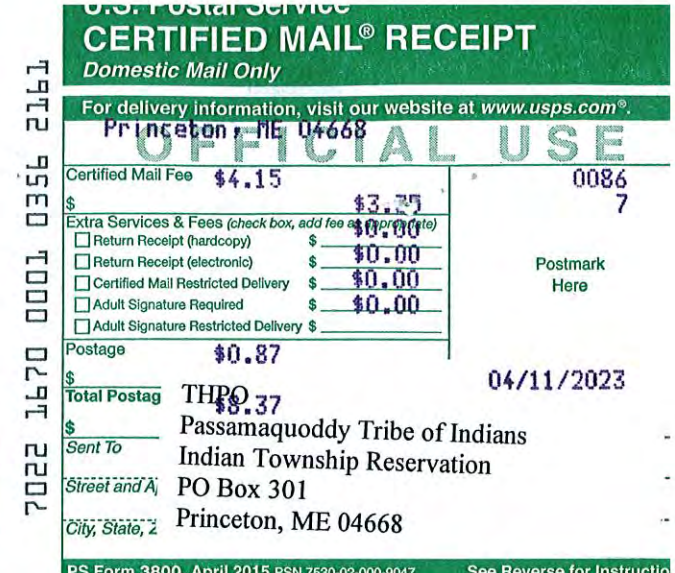

U.S. Postal Service™
CERTIFIED MAIL® RECEIPT
Domestic Mail Only

For delivery information, visit our website at www.usps.com®.

Princeton, ME 04668

OFFICIAL USE

Certified Mail Fee $4.15
$3.35
0086 7

Extra Services & Fees (check box, add fee as appropriate)
- Return Receipt (hardcopy) $0.00
- Return Receipt (electronic) $0.00
- Certified Mail Restricted Delivery $0.00
- Adult Signature Required $0.00
- Adult Signature Restricted Delivery $

Postage $0.87

Postmark Here

04/11/2023

Total Postage THPO $8.37

Sent To Passamaquoddy Tribe of Indians
Street and A Indian Township Reservation
City, State, Z PO Box 301
Princeton, ME 04668

PS Form 3800, April 2015 PSN 7530-02-000-9047 See Reverse for Instructio

7022 1670 0001 0356 2161

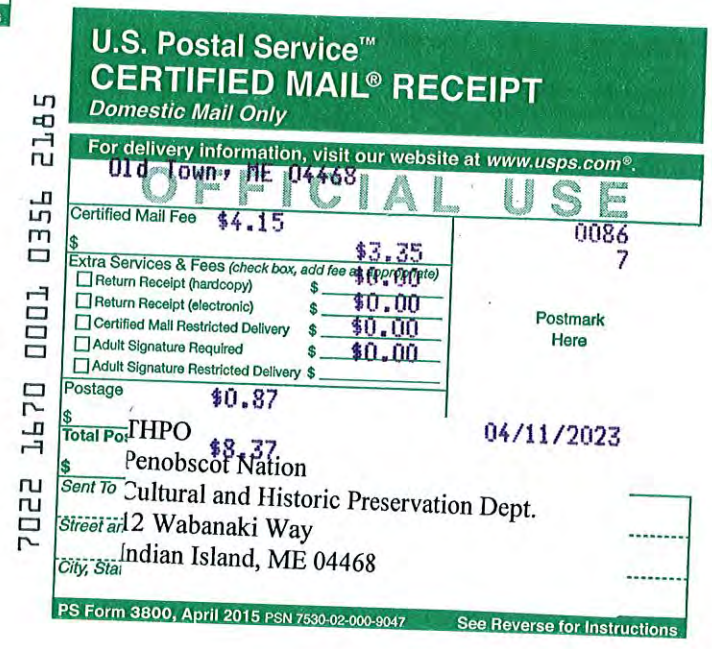

U.S. Postal Service™
CERTIFIED MAIL® RECEIPT
Domestic Mail Only

For delivery information, visit our website at www.usps.com®.

Old Town, ME 04468

OFFICIAL USE

Certified Mail Fee $4.15
$3.35
0086 7

Extra Services & Fees (check box, add fee as appropriate)
- Return Receipt (hardcopy) $0.00
- Return Receipt (electronic) $0.00
- Certified Mail Restricted Delivery $0.00
- Adult Signature Required $0.00
- Adult Signature Restricted Delivery $

Postage $0.87

Postmark Here

04/11/2023

Total Postage THPO $8.37

Sent To Penobscot Nation
Street and 12 Wabanaki Way
City, Sta Indian Island, ME 04468

PS Form 3800, April 2015 PSN 7530-02-000-9047 See Reverse for Instructions

7022 1670 0001 0356 2185

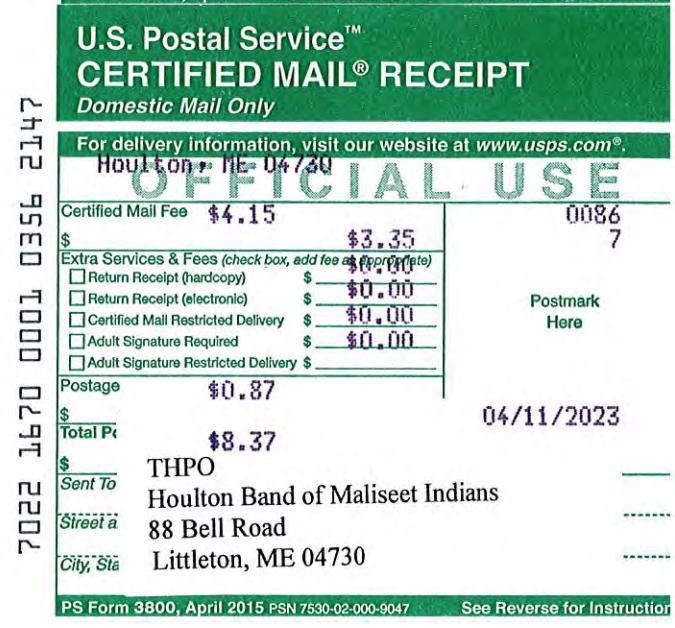

U.S. Postal Service™
CERTIFIED MAIL® RECEIPT
Domestic Mail Only

For delivery information, visit our website at www.usps.com®.

Houlton, ME 04730

OFFICIAL USE

Certified Mail Fee $4.15
$3.35
0086 7

Extra Services & Fees (check box, add fee as appropriate)
- Return Receipt (hardcopy) $0.00
- Return Receipt (electronic) $0.00
- Certified Mail Restricted Delivery $0.00
- Adult Signature Required $0.00
- Adult Signature Restricted Delivery $

Postage $0.87

Postmark Here

04/11/2023

Total Postage $8.37

Sent To THPO
Street a Houlton Band of Maliseet Indians
City, Sta 88 Bell Road
Littleton, ME 04730

PS Form 3800, April 2015 PSN 7530-02-000-9047 See Reverse for Instruction

7022 1670 0001 0356 2147


SACO
NORWOOD MARINA
CAMP ELLIS TOWN PIER
SACO RIVER
SACO BAY
FEDERAL CHANNEL
JORDAN POINT
PROPOSED PIER
PROPOSED ACCESS ROAD
MARINE SCIENCE CENTER
UNIVERSITY OF NEW ENGLAND CAMPUS
ROUTE 9
NEWTON ROAD
HILLS BEACH ROAD
BIDDEFORD
SEA BREEZE AVE
LONG AVE
HILLS BEACH
HILLS BEACH ROAD
612.6103
355.319°
427.4478
41.8134°
371.7535
298.819°
552.8257
359.4063°
223.4801
295.9063°
223.4285
62.9328°
1130.7745
355.319°
3881.4977
359.4063°
3881.4977
359.4063°
371.5988
342.6475°
669.4197
14.3968°
1954.0347
175.319°
1954.0347
175.319°
1000
175.319°
453.549
162.6475°
685.7071
194.3968°
209.8609
718.819°
254.6578
218.7276°
1027.3684
302.9498°
668.8048
309.1461°
729.1461°
718.5195
517.4461
122.9498°



SOURCE:
USGS TOPOGRAPHICAL MAP OF BIDDEFORD, MAINE 2022

SITE LOCATION MAP

(NOT TO SCALE)

PENOBSCOT NATION
CULTURAL & HISTORIC PRESERVATION
12 WABANAKI WAY, INDIAN ISLAND, ME 04468

CHRIS SOCKALEXIS – TRIBAL HISTORIC PRESERVATION OFFICER
E-MAIL: chris.sockalexis@penobscotnation.org

NAME	Tom Saucier
ADDRESS	Site Design Associates 23 Whitney Way Topsham, ME 04086
OWNER'S NAME	University of New England
TELEPHONE	201-449-4275
EMAIL	tsaucier@sitedesignassociates.biz
PROJECT NAME	Marine Science Center Pier – 11 Hills Beach Road
PROJECT SITE	Biddeford, ME
DATE OF REQUEST	April 10, 2023
DATE REVIEWED	October 19, 2023

Thank you for the opportunity to comment on the above referenced project. This project appears to have no impact on a structure or site of historic, architectural or archaeological significance to the Penobscot Nation as defined by the National Historic Preservation Act of 1966, as amended.

If there is an inadvertent discovery of Native American cultural materials during the course of the project, please contact my office at (207) 817-7471. Thank you for consulting with the Penobscot Nation Tribal Historic Preservation Office with this project.

Chris Sockalexis, THPO
Penobscot Nation

Tribal Historic Preservation Office
Passamaquoddy Tribe
PO Box 159 Princeton, Me. 04668
207-214-4051

Site Design

23 Whitney Way

Topsham, Me

Re: Biddeford – 11 Hills Beach Rd

Dear Tom;

The Passamaquoddy THPO has reviewed the following applications regarding the historic properties and significant religious and cultural properties in accordance with NHPA, NEPA, AIRFA, NAGPRA, ARPA, Executive Order 13007 Indian Sacred Sites, Executive Order 13175 Consultation and Coordination with Indian Tribal Governments, and Executive Order 12898 Environmental Justice.

The Pier Project listed above will not have any impact on cultural and historical concerns of the Passamaquoddy Tribe but is concerned about the road work, will there be archeological work . Should buried artifacts, human remains, cultural sites or ground features be unexpectedly unearthed during ground disturbing activities, all construction should immediately cease and the resources be examined by a professional archaeologist. Additionally, all appropriate authorities- including all pertinent tribal entities should be notified.

Sincerely;

Donald Soctomah
Soctomah@gmail.com
THPO
Passamaquoddy Tribe

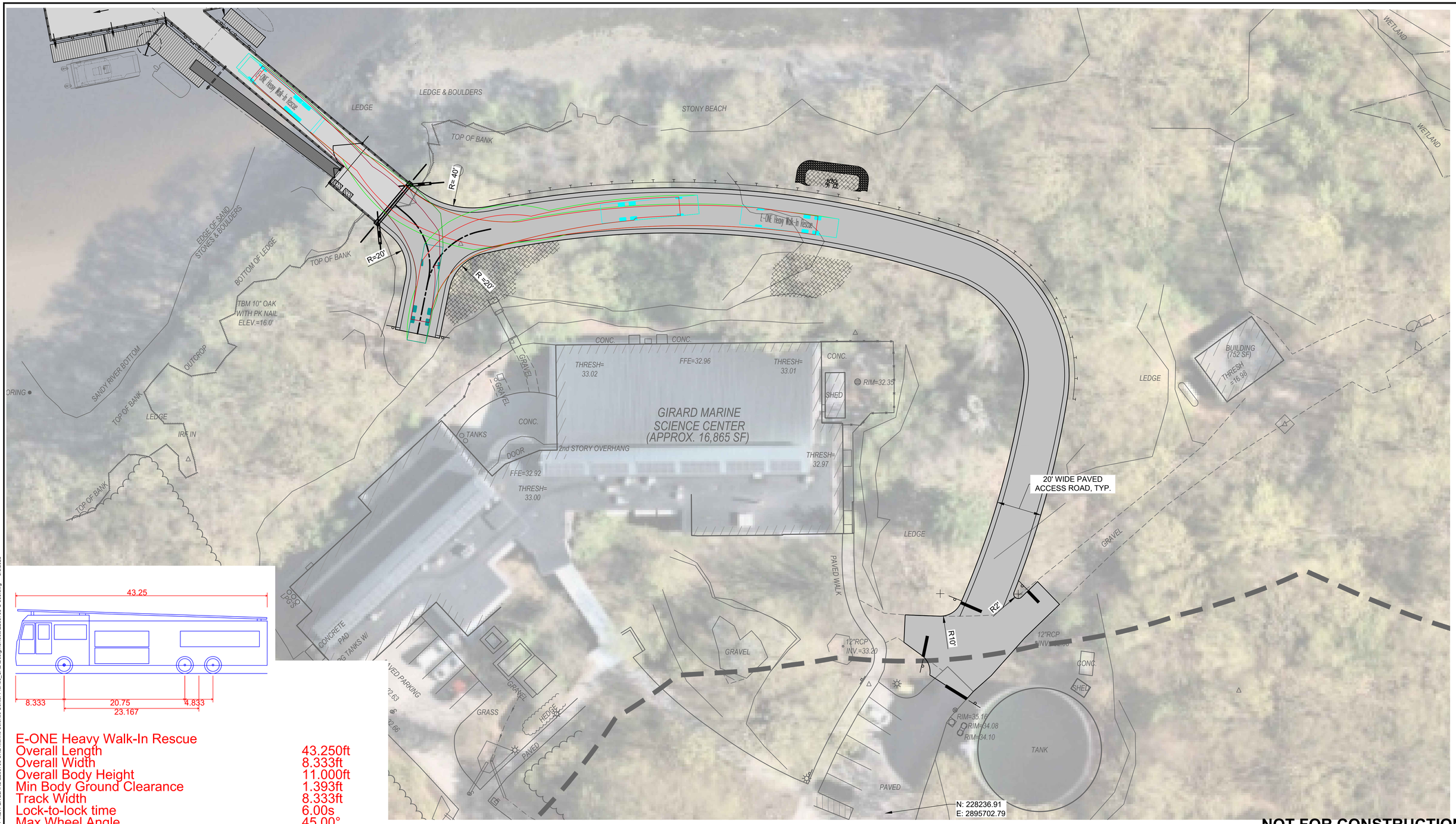

E-ONE Heavy Walk-In Rescue	
Overall Length	43.250ft
Overall Width	8.333ft
Overall Body Height	11.000ft
Min Body Ground Clearance	1.393ft
Track Width	8.333ft
Lock-to-lock time	6.00s
Max Wheel Angle	45.00°

NOT FOR CONSTRUCTION

Attention:
0 1"
If this scale bar does not measure 1" then drawing is not original scale.

DRAFT

Designed:	VD
Drawn:	VD
Checked:	BMM
Approved:	BMM
P.E. No:	13033
GEI Project	2203703

GEI Consultants
GEI CONSULTANTS, INC.
5 MILK STREET
PORTLAND, ME 04101
(207)797-8901

UNE
UNIVERSITY OF NEW ENGLAND
11 HILLS RD.
BIDDEFORD, MAINE

UNIVERSITY OF NEW ENGLAND MARINE SCIENCE CENTER PIER
11 HILLS BEACH ROAD
BIDDEFORD, YORK COUNTY, MAINE

NO	DATE	ISSUE/REVISION	APP
0			

SHEET NAME: **VEHICLE CIRCULATION EXHIBIT**

SHEET NO.: 1 OF 1

DICASTELNUOVO, VINNIE B:\Working\UNIVERSITY OF NEW ENGLAND\2203703 UNE Marine Science Center Pier\00_CAD\Design\Sheets\2203703-C-003.dwg - 6/6/2025

Attachment 14
UNE Response Letter Addressing
Planning Board Member Comments

UNIVERSITY OF NEW ENGLAND

INNOVATION FOR A HEALTHIER PLANET

June 11, 2025

David Galbraith, City Planner
City of Biddeford
P.O. Box 586
205 Maine Street
Biddeford, Maine 04005

RE: University of New England
Proposed Research Pier

Dear David and Planning Board Members:

In response to the questions and deliberations of the Planning Board after the presentation and public comments, UNE is pleased to submit the following:

After all of the discussion at the last meeting, is was clear that there was confusion on what city ordinances and regulations are applicable to this project and the pending Site Plan review.

Review Criteria
Toward the end of the May 21, 2025 Planning Board meeting and then in writing after the meeting, the City Solicitor, Harry Center, stated that the Planning Board process was governed by the City's Ordinances relating to Site Plan review and Shoreland Zoning Ordinance standards. The Site Plan criteria are found in Article XI.II Section 5.B of the City Ordinance while the Shoreland Zoning standards are found in Article XIV Section 15(c).

On May 27, 2025, Attorney Center wrote to the Planning Board reiterating what criteria the Planning Board's decision was governed by. He wrote, in part: "At this time, I see no basis for the City's Planning Board to deny this permit based upon the water depth at the location, the current, or any of the accusations made at the last meeting- as there are no standards within the City's Code of Ordinances/Shoreland Zoning Ordinance that would justify or support the denial of a pier based on such claims by the opponents." See attached, *EXT: UNE Research Pier*, at the end of this letter.

Prior to the May 21 meeting, Planning Office staff issued its report, *Planning Board Staff Report,* dated May 13, 2025, in regards to this project, in which it indicated that the Site Plan and Shoreland Zoning Review criteria applied to UNE's application for site plan approval. From a Zoning perspective, this project should be reviewed against the Institutional Zone and Shoreland Zone standards. This project was included on the

Planning Board approved University of New England Institutional Zone Master Plans on February 9, 2009, February 3, 2016, and again on the current plan approved April 19, 2023. In the aforementioned report, the City Planner wrote, in part: "Staff find that the application satisfies the City's Shoreland Zoning Ordinance and Site Plan criteria."

In light of the fact that there continues to be uncertainty about the Harbormaster's role in the approval of UNE's proposed pier. UNE's obligations and the Harbormaster's role are set forth in Section 74-35 of the City Ordinance. It is very important to understand that Section 74-35 was amended in September 2023 in order to clarify the role of the Harbormaster in the process as well as to clarify what an applicant must do to obtain permission. The amendments were drafted by John Schafer and presented to the City Council's Policy Committee by John Schafer on August 7, 2023. Essentially, the amendments created subsections with almost all new language becoming Sections 74-35(c) and (d).

As one can see in Section 74-35, there is no requirement or authority for the Harbormaster to evaluate a pier design or location and no standards or criteria by which any such evaluation would be done. There are no dimensional or design standards for the construction or location of a pier in any city ordinance. Nowhere does the Ordinance state that permission to construct a pier is contingent upon location, orientation, size, depth of water, current, or materials.

The Ordinance begins with **Section 74-35(a)**, which states: "No additions, alterations, new construction or/or changes to an existing wharf, pier or landing shall be made without prior permission of the Harbormaster."

Section 74-35(b) then states: "Permission for the construction of any new wharf or pier within the jurisdictional limits of the City shall not be granted without approval of the Harbormaster, along with federal, state and local governing authorities."

So that applicants can understand what they need to do, **Section 74-35(c)(1)-(10)** provides the detail of what an applicant must do to "obtain permission for any new wharf or pier." In June of 2024, UNE submitted the required information, including all items listed in subsections 1-10.

On August 19, 2024, UNE was notified by the City Manager that "Based on this information and in harmony with my earlier communications, please consider this as formal notification from the City of Biddeford that the application has been found in compliance with the above-mentioned City Code." *See* attached, scan_jbennett_2024-08-19-10-06-53.pdf.

That letter of course did not mean that UNE could begin building the pier. Rather, under Section 74-35, UNE is required to obtain regulatory approvals from entities such as the Army Corps of Engineers, the Maine Department of Environmental Protection, the Saco River Corridor Commission, and the Planning Board (referred to in the Ordinance as Biddeford Code Enforcement).

So that applicants and the Harbormaster would be clear about the Harbormaster's role, **Section 74-35(d)** provides the details of the Harbormaster's role and states: "The process to obtain permission for any new wharf or pier shall be facilitated by the Harbormaster. Initially, the Harbormaster shall be available to guide the applicant through the application process and finally, to sign off that all regulatory approvals have been obtained for construction."

Consistent with practice prior to the 2023 amendments, UNE engaged the Harbormasters and Chair of the Harbor Commission back in 2016 and sought their counsel on the proposed pier project. Their input was considered with some of it incorporated into the design that has been presented to the Planning Board. UNE engaged again with the current Harbormaster in later 2023 and listened to his stated concerns. Both Harbormasters' 2016 and 2023 input is described in detail in the memos from GEI, dated November 28, 2023, and from Baker Design Consultants (later merged into GEI), dated March 22, 2016. These two documents are included in the original Site Plan Application. In its staff report, the Planning Staff recognized the 2023 memo and quoted from it in its staff report.

To date, UNE has obtained required regulatory approvals from the Saco River Corridor Commission, Maine Department of Environmental Protection and the Army Corp of Engineers, which approvals have been provided to the Planning Board in the original UNE submission. The only remaining regulatory approval required under Section 74-35(c)(10) is the Site Plan Review Approval. Once all required regulatory approvals are obtained, the Harbormaster can finally "sign off that all regulatory approvals have been obtained," resulting in UNE having permission from the City to build the pier.

For anybody who still has questions, it could be helpful for them to watch John Schafer's August 7, 2023 discussion with the Policy Committee about the amendments to Section 74-35 that he drafted. A video of the meeting can be found on the City website at https://biddefordme.portal.civicclerk.com/event/1607/media

As one can see for themselves, during that meeting, Mr. Schafer told the Committee that the Harbormaster is "nothing but a facilitator" of the process and that the Harbormaster does not approve piers or issue permits. Mr. Schafer stated that Section 74-35(c)(1) - (10) is "nothing but a blueprint" for achieving approval from other regulators. When pressed by Committee members for clarification, Mr. Schafer emphasized that the Harbormaster is "nothing but a facilitator" and that the Harbormaster only affirms that approvals have been obtained and makes sure that the "blueprint is followed."

Moorings

The Planning Board deliberations also reflected on the potential impacts to moorings. While this is **not** a criterion of the Site Plan review ordinance, UNE will work with the City to mitigate any impacts and has offered to pay for any moorings relocations that may be required.

To clarify the consideration of ownership, as per the Maine State Statue, Title 38, Waters and Navigation, Chapter 1.1.3, Mooring Sites, "Assignment of these mooring privileges does not confer any right, title or interest in the submerged or intertidal lands owned by the state". This statue further clarifies "the harbor master shall assign and indicate only to the masters or owners of boats and vessels the location that they may occupy for mooring purposes and shall change the location of those moorings from time to time when the crowded condition of that harbor or great pond, the need to conform to section 7-A or other conditions render the change desirable".

The actual mooring balls and their associated tackle are the responsibility of the boat owner. The Biddeford Mooring Permit Application clearly states "The location is subject to change at any time at the discretion of Harbor Master or Deputy as conditions dictate.", in coordination with the state statute. Thus, the land is owned by the state, the moorings by the boat owners, and the harbor master has the reasonability to assign and relocate these moorings.

To better understand the potential impacts to moorings, UNE requested from the city it's mooring map, but was informed one was not available. In consultation with the Maine State Bureau of Parks and Recreation, we again requested a copy of the Biddeford Mooring Map. The Submerged Lands Coordinator informed UNE that they had spoken with the harbormaster and confirmed no mooring map was available. They were are to confirm from the harbormaster that two mooring were impacted by the proposed UNE Research Pier development.

In comparison of historical, 09/18/2013, Google Earth imagery, as compared to 2024, there appears to be several unoccupied mooring locations in this general area that could meet the need of relocating the impacted moorings. Additionally, UNE has offered to "swap" one of its current mooring locations for one of the impacted mooring locations. The owners of these moorings do not have a dingy on UNE's abutting shoreline and are already motoring to the moorings from other locations, so depending on where they are coming from, the relocated moorings might be closer to their point of origin.

Analysis documentation
In 2008 and 2009, UNE initiated an analysis of 9 sites along its shoreland to evaluate options for a new pier. Based on the criteria reviewed and UNE's programmatic needs, Site 7 was chosen as the optimal site for UNE. This site then was scrutinized for additional considerations utilized in the ultimate design. This included geotechnical surveys on both land and in water. Contour surveys were conducted twice in the water and then again on land. Evaluations of current and its impacts were conducted. Wetlands were surveyed and impacts analyzed. Initial discussions were had with all regulatory bodies in 2015 and 2016. This included conducting a site visit in 2016, with the harbormasters and chair of the Harbor Commission, whose input was incorporated into the design.

The results of the investigatory process were presented to City staff, including the City Manager, City Planner, Harbormasters, Chair of the Harbor Commission/Planning Board

member and Development staff. That presentation is attached at the end of this letter. The site option plan with the 9 sites and the subsequent evaluation matrix are contained within the presentation. It is important to note that while the estimates of cost are relative, they are 15 years old and a thus not relevant to today's market. Additionally, the size of the pier has direct correlation to the environmental impact. A larger pier requires additional pilings and results in additional shading of the bottom of the river. This is a much more significant consideration of the regulatory agencies in marshy areas, like site 8, as compared to the smaller rock/rubble intertidal zone at site 7.

It is also important to note that the current at site 7 is slower than further out towards the channel, resulting is easier and more controlled docking and less impacts from ice flowing in the spring runoff. This was also recognized in the consultations with the harbor masters during the site visit in 2016, where they advised "*Relocate pier further upstream and change orientation to reduce current exposure. The Harbormasters confirmed that the channel restriction located just seaward of the pier created fast currents that ran parallel to shore. Based on their knowledge of the harbor, they suggested the pier would be better rotated upstream parallel to the current and moved upstream and inshore from the Layout 1 location. This would put the pier in water with less tidal current and make docking easier and safer".* The area just seaward of site 7 is site 8.

Request for NIST application
The National Institute of Standards and Technology, NIST, was solicited for funding by UNE to construct the pier. The application is directly related to financing and it is not in any way related to regulatory permitting. The application does not seek approval of the pier design nor location.

In closing, we hope this helps to address some of the questions related to application. We are confident that our submission conforms to the required city standards and ordinances. We look forward to reviewing the Site plan Review Criteria with you in greater detail at the June 18th meeting.

Sincerely,



Alan Thibeault
Vice President for University Operations

cc: Tom Saucier, Site Design Associates
Dan Bannon, GEI

From:	Galbraith, David
To:	Alan Thibeault; Plotkin, Alexa; Patoine, Larry; Dubois, Matthew; Angers, Roch; Susan Deschambault; Deschambault, Susan; Lewis, Kayla; Beaudette, Stephen
Cc:	Center, Harry; Whitten, Nan
Subject:	EXT: UNE Research Pier
Date:	Wednesday, May 28, 2025 11:51:19 AM
Attachments:	Shoreland Zone Ordinance Relating to Piers Docks Wharfs.pdf

This email originated from outside of UNE.

All, this email was sent to me by the City Solicitor (Harry Center) late last night. In his email Harry states *"I will provide this advice/opinion to the Planning Board before the June 18, 2925 meeting and I would ask the Planning Department to please forward this email to all members of the planning board and the designated official from UNE".* As such, I am forwarding the entire email string and Harry's response.

As always, please do not respond to this email or discuss this matter with other Board members. I have also copied Alan Thibeault of UNE.

Thanks all & looking forward to seeing you all at the site walk on June 9th.
David

From: Harry Center <hcenter@woodedlaw.com>
Sent: Tuesday, May 27, 2025 8:31 PM
To: Matthew Haas <matthew1@maine.rr.com>; Whitten, Nan <Nan.Whitten@Biddefordmaine.org>
Cc: Galbraith, David <David.Galbraith@biddefordmaine.org>
Subject: RE: Public notice

> **Caution:**This is an external email. Please take care when clicking links or opening attachments. When in doubt, contact the IT Department

Mr. Hass:
Attached is the provision of the City's Shoreland Zoning Ordinance relating to "approval" of piers. There are no standards for "local knowledge"; depth, current, moorings or any other complaints by the opponents of the UNE project.
These are the standards and provisions that the City Planning Board must apply to the application.
Additionally, because this is a non-residential development, site review is also required--however, none of the standards in that provision of the City Code of Ordinances relate to telling an applicant where the location of a pier should be located.
I will provide this advice/opinion to the Planning Board before the June 18, 2925 meeting and I would ask the Planning Department to please forward this email to all members of the planning board and the designated official from UNE. I will continue to follow the law and due process requirements to all parties.
At this time, I see no basis for the City's Planning Board to deny this permit based upon the water depth at the location, the current, or any of the accusations made at the last meeting-as there are no standards within the City's Code of Ordinances/Shoreland Zoning Ordinance that would justify or support the denial of a pier based on such claims by the opponents. If someone can point to a Shoreland Zoning Ordinance provision, City land use standard or other ordinance within the City's jurisdiction to deny this request for approval,

then the Planning Board should consider any such provision and decide. Further if an opponent can point to a City Ordinance provision that allows the City to dictate the location of the pier, I will be happy to review it.
I made that statement at the meeting, in good faith, that after the Planning Board heard from the public, I would give them legal advice regarding my opinion as to the legal standards the Planning Board must apply, as many of the public comments related to issues that are not within the Planning Board's jurisdiction. However I will respond to your email now.
The Planning Board will make its decision based on the standards set forth in the attached Ordinance. I have not located any other City of Biddeford Land Use Ordinance provision related to docks, piers, wharfs and City staff has not alerted me to any others. If you or anyone else are aware of anything within the City's Code (available online at the City's website) please feel free to raise such provisions and staff and I will review them.
Thank you,
Harry B. Center, II Esq.
City Attorney

From: Matthew Haas <matthew1@maine.rr.com>
Sent: Tuesday, May 27, 2025 4:52 PM
To: Nan Whitten <Nan.Whitten@biddefordmaine.org>
Cc: David Galbraith <David.Galbraith@biddefordmaine.org>; Harry Center <hcenter@woodedlaw.com>
Subject: Re: Public notice

During the meeting near the end there was a discussion on the limits of the boards review . harry center stated he has and will issue them some guidance on the extent and limits of their review. and he said it was available to the public.

Matthew Haas
Sent from my iPhone

> On May 27, 2025, at 1:57 PM, Whitten, Nan <Nan.Whitten@biddefordmaine.org> wrote:
>
> ***Guidance, do you mean the ordinance or do you have something specific in mind?***
>
> ---
>
> **From:** matthew1@maine.rr.com <matthew1@maine.rr.com>
> **Sent:** Tuesday, May 27, 2025 1:51 PM
> **To:** Whitten, Nan <Nan.Whitten@Biddefordmaine.org>
> **Subject:** RE: Public notice
>
> **Caution:**This is an external email. Please take care when clicking links or opening attachments. When in doubt, contact the IT Department
>
> Good afternoon, Can I get copies of the guidance the planning board was

issued by city legal council?

From: "Whitten, Nan"
To: "Matthew Haas"
Cc:
Sent: Tuesday May 27 2025 7:46:38AM
Subject: RE: Public notice

Thank you Matthew, you are on the list

From: Matthew Haas <matthew1@maine.rr.com>
Sent: Thursday, May 22, 2025 6:33 PM
To: Whitten, Nan <Nan.Whitten@Biddefordmaine.org>
Subject: Re: Public notice

> **Caution:**This is an external email. Please take care when clicking links or opening attachments. When in doubt, contact the IT Department

Matthew haas
36 meeting house road
Biddeford maine
297-590-3889

Matthew Haas
Sent from my iPhone

> On May 22, 2025, at 2:34 PM, Whitten, Nan <Nan.Whitten@biddefordmaine.org> wrote:
>
> ***Happy to do so. May I please have your full name and mailing address?***
>
> ***Thank you for reaching out***
>
> ***Nan Whitten***
> ***City of Biddeford***
> ***Office Manager***
> ***Planning & Development***
> ***207-284-9115***

From: matthew1@maine.rr.com <matthew1@maine.rr.com>
Sent: Thursday, May 22, 2025 2:32 PM
To: Whitten, Nan <Nan.Whitten@Biddefordmaine.org>
Subject: Public notice

Caution: This is an external email. Please take care when clicking links or opening attachments. When in doubt, contact the IT Department

Please add me to the public notice roster for the UNE pier project. Thank you

City of Biddeford, Maine

The Office of
City Manager
James A. Bennett
Email: james.bennett@biddefordmaine.org

August 19, 2024

University of New England
11 Hills Beach Road
Biddeford, Maine 04005

Attention: Mr. Alan Thibeault, VP of University Operations

RE: Notice to Proceed with External Reviews

Dear Mr. Thibeault,

On August 9, 2024, I received written clarification from Mr. Wayne Duffett, PE of TECAssociates that UNE's proposed Research Pier and Float System has complied with City Code 74-35 subsections (c) 1-10. Those sections are as follows:

(1) A formal boundary survey that has been documented at the Registry of Deeds.
(2) A copy of the boundary survey showing the littoral zone, established by extending property lines seaward.
(3) A location map from a portion of a USGS topographic map or coastal chart.
(4) Distance to navigable channels or any federal navigation project.
(5) Mean high- and low-water boundary.
(6) A plan view on the drawing(s) that shows the location and dimensions of the applicant's structure(s) in relation to the applicant's property lines.
(7) A typical cross section/side view of the applicant's structures on the drawing(s).
(8) Evidence that owners of abutting properties have been notified of the applicant's intended project.
(9) Evidence that the 1) Maine Historic Preservation Commission, 2) Aroostook Band of Micmac, 3) Passamaquoddy Tribe of Indians: Pleasant Point; Indian Township, 4) Houlton Band of Maliseet Indians, and 5) Penobscot Indian Nation have been notified of the applicant's intended project.
(10) Completed applications to the Army Corps of Engineers, Department of Environmental Protection and Biddeford Code Enforcement. A regulatory permit from the Saco River Corridor Commission may also be required in some instances.

Based on this information and in harmony with my earlier communications, please consider this as formal notification from the City of Biddeford that the application has been found in compliance with

the above mention City Code. That finding allows the application to proceed in the next steps of the review process; namely formal review by all agencies except those that are part of the City of Biddeford. After each and all of those processes are complete, the City will move forward with the final review(s) by agents and Committees of the City.

While I don't believe it is necessary, let me empathically state that this communication does not in any form, imply that the City has in any way made a determination that the location submitted has been approved. Said approval will considered after completion of all process and in compliance with applicable laws, regulations. This includes all local ordinances.

Please feel free to reach out to me if you have any questions

Sincerely,

James A. Bennett
City Manager

CC: Biddeford Mayor and City Council

University of New England Pier
Biddeford, Maine



Baker Design Consultants
Civil, Marine & Structural Engineering
7 Spruce Road, Freeport, ME 04032
b.baker@bakerdesignconsultants.com

January 26, 2016

Site Mapping & Plans

NOAA CHART

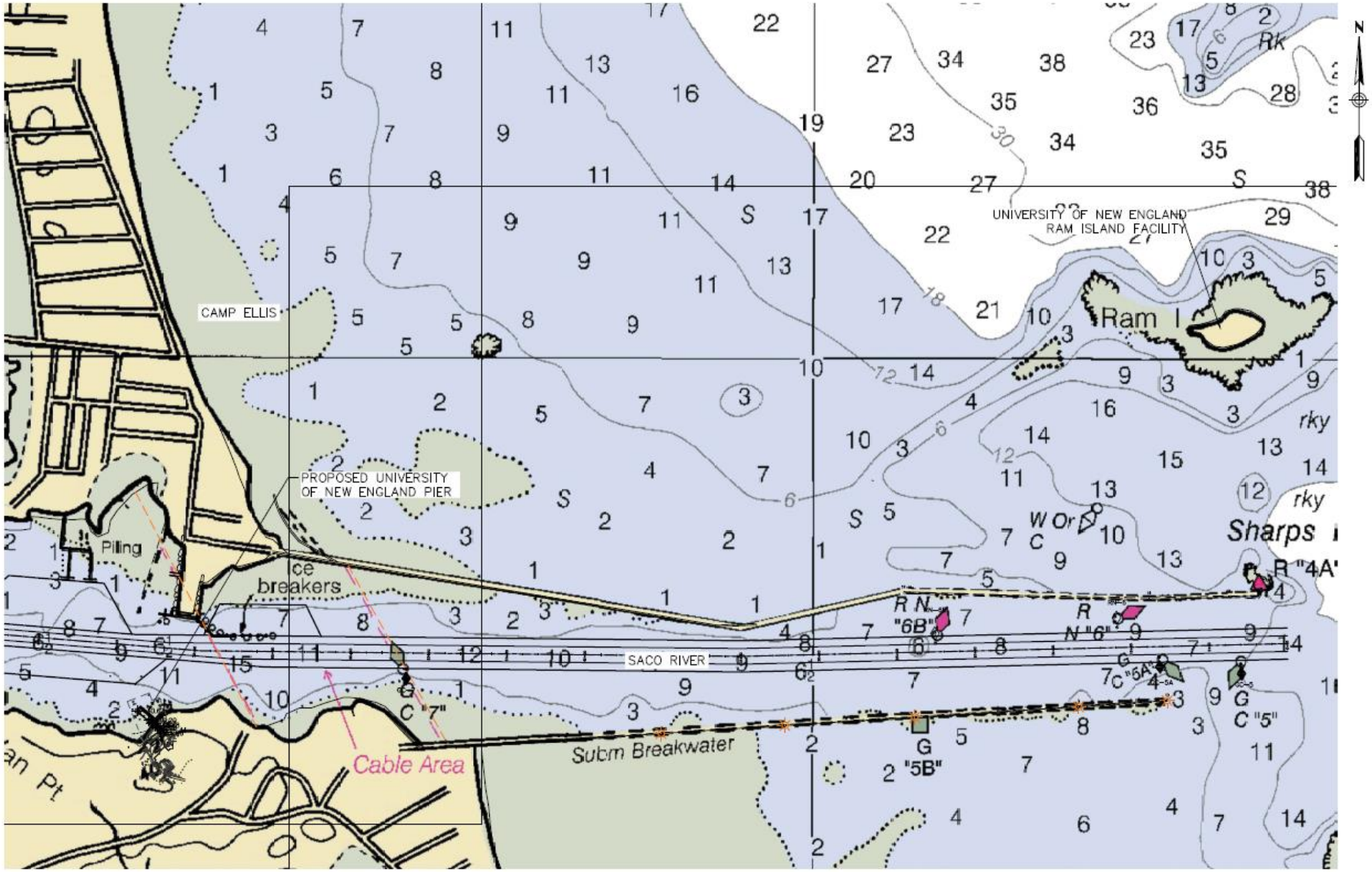

BAKER DESIGN CONSULTANTS
Civil, Marine, and Structural Engineering

NO.	DATE	
A	6-25-15	BJB
	PROGRESS REVIEW SUBMISSION	INT.

DESIGNED BY: JJC
DRAWN BY:
CHECKED BY: BJB
SCALE: AS SHOWN

SHEET TITLE: PROJECT VICINITY PLAN
PROJECT: UNIVERSITY OF NEW ENGLAND UNE MSC WATERFRONT BIDDEFORD, MAINE

DATE: FEBRUARY 2015
CONTRACT NO. 15-07
SHEET NO. SK-1
REV. A

Site Selection Study

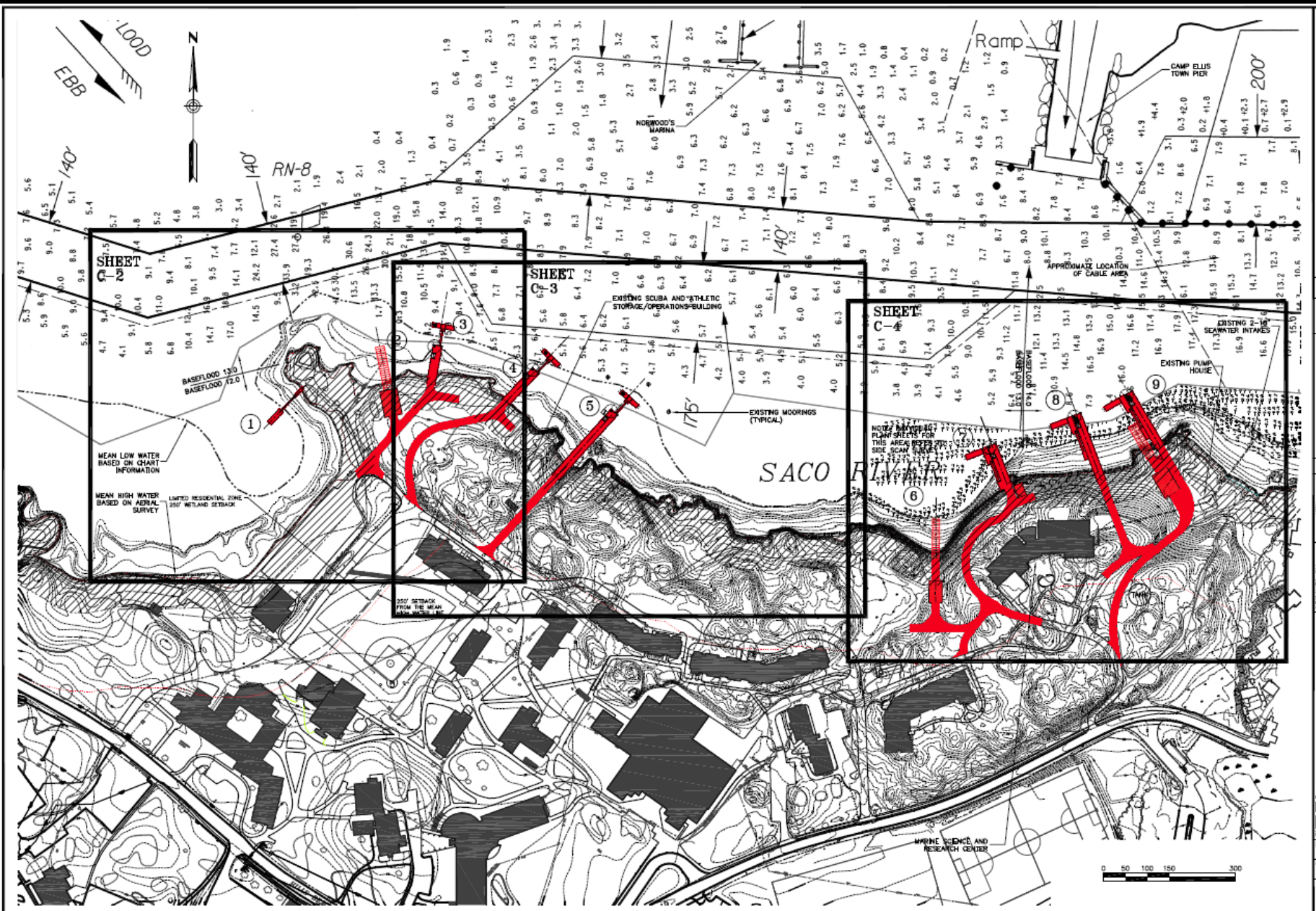

Site Selection Study

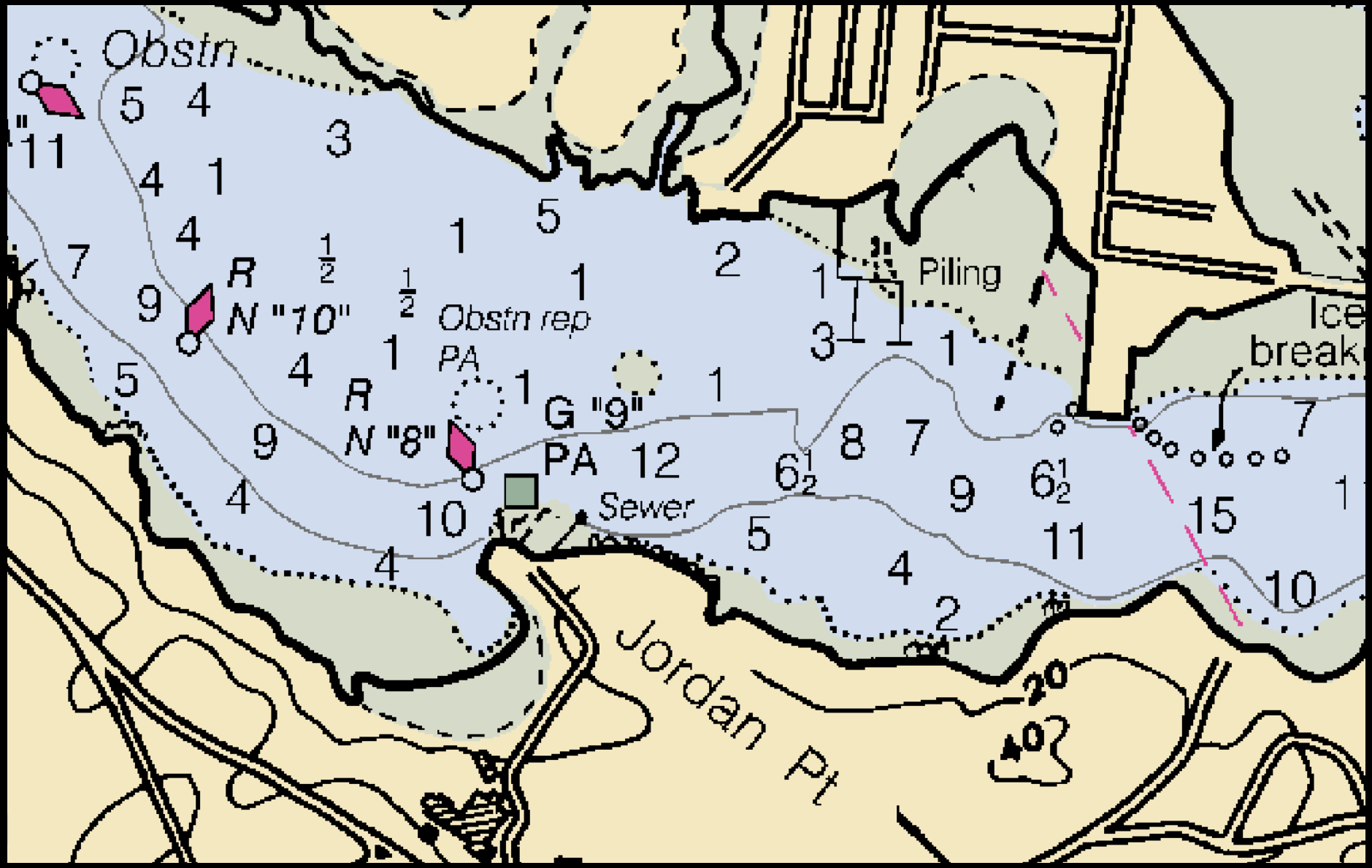

Site Selection Study

TABLE 1 SITE DEVELOPMENT CRITERIA		SITE 1 Existing Pier Improved	SITE 2 New Boat House & Ramp	SITE 3. New Pier with gangway extension	SITE 4 New Pier with gangway extension	SITE 5 Replacement Pier- gangway ext	SITE 6 New Boat House & Ramp	SITE 7 New Pier to deep water	SITE 8 New Pier to deep water	SITE 9 New Pier, Boat House & Ramp.
General Description		Improvements to existing shallow access site	No Pier. Dedicated launching &storage.	Dedicated Pier with Vehicle Access	Dedicated Pier with Vehicle Access	Replaces existing shallow access at recreation site	Steep access . No Pier. Dedicated launching & storage.	Dedicated Pier with Vehicle Access	Dedicated Pier with Vehicle Access	Dedicated Pier , Boathouse and Ramp.
Key Feature		Protected tidal Cove. Seasonal icing prevents year-round use	Tidal ramp requires hydraulic trailer rental or purchase for vessel. Floats installed on ramp to facilitate use.	Floats and Gangway removed for winter. Limited access to pier at Mid to high tide.	Floats and Gangway removed for winter. Limited access to pier at Mid to high tide.	Limited access to pier at Mid to high tide. Shared with recreational program. Pier length dictated by shallow water.	Tidal ramp requires hydraulic trailer rental or purchase for vessel. Floats installed on ramp to facilitate use.	Provides Pier to deep water. Natural protection behind escarpment. Close to Marine Science Bldg.	Avoids any blasting adjacent to the mammal tank. Close to Marine Science Bldg.	Shorefront topography allows for Pier and boat ramp. Close proximity to Neighboring properties.
Primary Affiliation with Marine Science Program		INFREQUENT Use	DEDICATED Waterfront	DEDICATED Waterfront	DEDICATED Waterfront	SHARED with Recreation	DEDICATED Waterfront	DEDICATED Waterfront	DEDICATED Waterfront	DEDICATED Waterfront
Type of Access		Seasonal	Tidal Ramp	Limited Year-round	Limited Year-round	Limited Year-round	Tidal Ramp	Year-round	Year-round	Year-round
Shared Users		UNE Staff/Students	None	None	None	UNE Recreation	None	None	None	None
LOCATION (Sheet Reference)		D-1	D-2	D-3	D-4	D-5	D-6	D-7	D-8	D-9
Distance from Marine Science Ctr	LF	2000	1500	1500	1250	1150	400	200	250	300
Setback from ACOE Channel	LF	Jordon Cove	200	175	215	450	500	350	310	250
Distance to Abutting Property	LF	600	800	1000	1075	1300	650	600	400	250
Base Flood Elev (FEMA '84-NGVD)	NGVD	12.0 (Zone V2)	13.0 (Zone V2)	13.0 (Zone V2)	13.0 (Zone V2)	13.0 (Zone V2)	13.0 (Zone V2)	13.0 (Zone V2)	14.0 (Zone V2)	14.0 (Zone V2)
Wind Exposure		W to NW	NW to N to E	NW to N to E	NW to N to E	NW to N to E	NW to N to NE	NW to N to E	NW to N to E	NW to N to E
Pier Deck Elevation	NGVD	12.0	13.0	13.0	13.0	13.0	13.0	13.0	14.0	14.0
MLW Depth at Float	FT	0-2	NA	6	6	3	NA	6	6	6
PIER GEOMETRY		$16,500.00	$0.00	$202,000.00	$224,000.00	$444,000.00	$0.00	$334,200.00	$444,200.00	$400,200.00
Length of Pier	FT	25	NA	90	100	200	NA	115	165	145
Width of Pier	FT	6	NA	20	20	20	NA	20	20	20
Jib Crane	EA	NA	NA	1	1	1	NA	1	1	1
Wave Barrier	LF	NA	NA	NA	NA	NA	NA	60	60	60
Transfer Pen (Pier Mounted)	EA	NA	NA	NA	NA	NA	NA	1	1	1
Pier Building (12x8 Marine Related)	SF	NA	NA	96	96	96	NA	96	96	96
SITE IMPROVEMENTS		$2,000.00	$45,950.00	$48,000.00	$55,000.00	$34,500.00	$37,500.00	$143,000.00	$144,000.00	$171,000.00
Access Road 16-ft w/turnaround	LF	NA	285	400	500	350	250	600	400	700
Ledge Removal	LF	NA	100	NA	NA	NA	NA	400	400	500
Utility Route (estimate ?)	LF	NA	285	400	500	350	250	300	400	700
Shore Support Building	SF	NA	NA	NA	NA	NA	NA	600	600	600
Landscaping	LS	0.1	1	1	1	0.5	1	1	1	1
FLOAT SYSTEM		$36,700.00	$0.00	$43,000.00	$43,000.00	$43,000.00	$0.00	$60,900.00	$60,900.00	$60,900.00
Gangway	FT	50	NA	40	40	40	NA	50	50	50
Unit Float Length	FT	40	NA	20	20	20	NA	40	40	40
Unit Float Width	FT	12	NA	10	10	10	NA	12	12	12
No. of Floats	EA	1	NA	3	3	3	NA	2	2	2
Fishery Cage (in Float)	EA	NA	NA	1	1	1	NA	1	1	1
BOAT RAMP		$0.00	$107,500.00	$0.00	$0.00	$0.00	$98,600.00	$0.00	$0.00	$84,600.00
Length of Ramp	FT	NA	90	NA	NA	NA	90	NA	NA	70
Width of Ramp	FT	NA	20	NA	NA	NA	20	NA	NA	20
Guide Piles	EA	NA	5	NA	NA	NA	4	NA	NA	4
Unit Float Length	FT	NA	20	NA	NA	NA	20	NA	NA	20
Unit Float Width	FT	NA	8	NA	NA	NA	8	NA	NA	8
No. of Floats	EA	NA	5	NA	NA	NA	4	NA	NA	4
BOAT HOUSE		$0.00	$460,000.00	$0.00	$0.00	$0.00	$460,000.00	$0.00	$0.00	$460,000.00
Setback from shore	FT	NA	25	NA	NA	NA	75	NA	NA	50
No. of Vessel Bays	EA	NA	2	NA	NA	NA	2	NA	NA	2
Footprint SF	SF	NA	2400	NA	NA	NA	2400	NA	NA	2400
Floor Slab Elevation	NGVD	NA	13	NA	NA	NA	13	NA	NA	13
Hydraulic Trailer	Ea	NA	1	NA	NA	NA	1	NA	NA	1

Site Selection Study

TABLE 2 REGULATORY CONSIDERATIONS	SITE 1 Existing Pier Improved	SITE 2 New Boat House & Ramp	SITE 3. New Pier with gangway extension	SITE 4 New Pier with gangway extension	SITE 5 Replacement Pier- gangway ext	SITE 6 New Boat House & Ramp	SITE 7 New Pier to deep water	SITE 8 New Pier to deep water	SITE 9 New Pier, Boat House & Ramp.
PERMIT AGENCIES									
ACOE Dept of the Army	☑	☑	☑	☑	☑	☑	☑	☑	☑
ME DEP NRPA/Site Location	☑	☑	☑	☑	☑	☑	☑	☑	☑
ME DOC Submerged Lands	NA	NA	☑	☑	☑	NA	☑	☑	☑
Saco River Corridor	☑	☑	☑	☑	☑	☑	☑	☑	☑
City of Biddeford	☑	☑	☑	☑	☑	☑	☑	☑	☑
HABITAT IMPACTS									
Upland	Minimal Change to existing access and grading.	Marine related facility (Boathouse and ramp) constructed within 75-ft setback.	Minor grading to create road. Turn around within 75-ft setback.	Road follows natural gradient. Turn around within 75-ft setback.	Access road improves existing route.	Marine related facility (Boathouse and ramp) constructed within 75-ft setback.	Major grading to create access road within 75-ft setback.	Major grading to create access road within 75-ft setback.	Marine related facility (Boathouse and ramp) constructed within 75-ft setback.
Shoreline	Stub Pier Constructed. Minimal shading	Cut/fill to create boathouse pad and ramp gradient.	Pier extends to low water.	Pier extends to low water.	New pier replaces existing facility	Cut/fill to create boathouse pad and ramp gradient.	Pier extends to Deep water with L-shaped float system.	Pier extends to Deep water with L-shaped float system.	Pier extends to Deep water with L-shaped float system.
Benthic	Characterization Required. Float sits on seabed at extreme low tide.	Intertidal impacts associated with ramp construction.	Shading from new floats.	Pier extends to MLW. Shading from floats	Pier extends to MLW. Shading from floats	Intertidal impacts associated with ramp construction.	Shading from pier/floats.	Shading from pier/floats.	Shading from pier/floats.
Water Quality	Shading from float.	Buffer to control ramp/building runoff.	Fishery Cage.	Fishery Cage.	Fishery Cage.	Buffer to control ramp/building runoff.	Fishery cage and mammal pen.	Fishery cage and mammal pen.	Runoff, fishery cage and mammal pen.
ADA ISSUES									
Pier	ADA access to Pier head	15% grade required to launch boats.	ADA access to Pier head	ADA access to Pier head	ADA access to Pier head	15% grade required to launch boats.	ADA access to Pier head	ADA access to Pier head	ADA access to Pier head
Gangway	Does not meet ADA Guidelines for length (80-ft). ADA width and handrail	NA	Does not meet ADA Guidelines for length (80-ft). ADA width and handrail	Does not meet ADA Guidelines for length (80-ft). ADA width and handrail	Does not meet ADA Guidelines for length (80-ft). ADA width and handrail	NA	Does not meet ADA Guidelines for length (80-ft). ADA width and handrail	Does not meet ADA Guidelines for length (80-ft). ADA width and handrail	Does not meet ADA Guidelines for length (80-ft). ADA width and handrail
VISUAL IMPACT									
From River Corridor	On Jordon Cove. Not directly exposed to the river corridor.	Building and Ramp will be visible from the river corridor.	Pier extends into river corridor.	Pier extends into river corridor.	Pier extends into river corridor.	Building and Ramp will be visible from the river corridor.	Pier extends into river corridor.	Pier extends into river corridor.	Building and Ramp and Pier visible from the river corridor.
SPECIAL CONSIDERATIONS									
Noise	No change from current conditions.	No change from current conditions.	Minimal Impact.	Minimal Impact.	Minimal Impact.	Minimal Impact.	Minimal Impact.	Minimal Impact.	Considers proximity to Neighboring properties.
Navigation	No Impact to existing Mooring Field.	No Impact to existing Mooring Field.	Approximately 2 moorings displaced.	Approximately 2 moorings displaced.	Approximately 2 moorings displaced.	Approximately 2 moorings displaced.	Approximately 2 moorings displaced.	Approximately 2 moorings displaced.	Approximately 2 moorings displaced.
Water Quality	No change from current conditions.	No change from current conditions.	Minimal or No Impact.	Minimal or No Impact.	Minimal or No Impact.	Minimal or No Impact.	Minimal or No Impact.	Minimal or No Impact.	Minimal or No Impact.
Winter Icing	Not an issue with seasonal facility	Boat ramp use will be impacted by ice.	Pier must resist ice buildup.	Pier must resist ice buildup.	Pier must resist ice buildup.	Boat ramp use will be impacted by ice.	Pier must resist ice buildup.	Pier must resist ice buildup.	Pier must resist ice buildup.
River Current	Not directly on river.	Cross current with some protection from Jordan Point.	Cross current.	Cross current.	Cross current.	Maximum setback from Channel.	Cost estimate includes wave barrier for protection	Cost estimate includes wave barrier for protection	Cost estimate includes wave barrier for protection
Mitigation	Unknown	Unknown	Unknown	Unknown	Unknown	Unknown	Unknown	Unknown	Unknown

Site Selection Study

TABLE 3 SITE CONCEPT COST ESTIMATE			SITE 1 Existing Pier Improved	SITE 2 New Boat House & Ramp	SITE 3. New Pier with gangway extension	SITE 4 New Pier with gangway extension	SITE 5 Replacement Pier- gangway ext	SITE 6 New Boat House & Ramp	SITE 7 New Pier to deep water	SITE 8 New Pier to deep water	SITE 9 New Pier, Boat House & Ramp.
Description	Unit Cost	Unit									
Mob Demobilization		5%	NA	$37,655	$17,985	$19,765	$32,011	$36,590	$33,030	$39,843	$72,229
Bonds & Insurance		1%	NA	$3,766	$1,799	$1,977	$3,201	$3,659	$3,303	$3,984	$7,223
PIER											
Fixed Pier	$110.00	SF	$16,500.00	NA	$198,000.00	$220,000.00	$440,000.00	NA	$253,000.00	$363,000.00	$319,000.00
Jib Crane	$4,000.00	EA	NA	NA	$4,000.00	$4,000.00	$4,000.00	NA	$4,000.00	$4,000.00	$4,000.00
Wave Barrier	$1,000.00	LF	NA	NA	NA	NA	NA	NA	$60,000.00	$60,000.00	$60,000.00
Transfer Pen	$10,000.00	LS	NA	NA	NA	NA	NA	NA	$10,000.00	$10,000.00	$10,000.00
Pier Building	$75.00	LF	NA	NA	NA	NA	NA	NA	$7,200.00	$7,200.00	$7,200.00
SITE IMPROVEMENTS											
Access Road 16-ft	$20.00	LF	NA	$5,700.00	$8,000.00	$10,000.00	$7,000.00	$5,000.00	$12,000.00	$8,000.00	$14,000.00
Ledge Removal	$60.00	LF	NA	$6,000.00	NA	NA	NA	NA	$24,000.00	$24,000.00	$30,000.00
Utility Route (est ?)	$50.00	LF	NA	$14,250.00	$20,000.00	$25,000.00	$17,500.00	$12,500.00	$15,000.00	$20,000.00	$35,000.00
Shore Support Bldg	$120.00	SF	NA	NA	NA	NA	NA	NA	$72,000.00	$72,000.00	$72,000.00
Landscaping	$20,000.00	LS	$2,000.00	$20,000.00	$20,000.00	$20,000.00	$10,000.00	$20,000.00	$20,000.00	$20,000.00	$20,000.00
FLOAT SYSTEM											
Gangway	$350.00	EA	$17,500.00	NA	$14,000.00	$14,000.00	$14,000.00	NA	$17,500.00	$17,500.00	$17,500.00
Floats	$40.00	SF	$19,200.00	NA	$24,000.00	$24,000.00	$24,000.00	NA	$38,400.00	$38,400.00	$38,400.00
Fishery Cage (in Float)	$5,000.00	EA	NA	NA	$5,000.00	$5,000.00	$5,000.00	NA	$5,000.00	$5,000.00	$5,000.00
BOAT RAMP											
Boat Ramp	$35.00	SF	NA	$63,000.00	NA	NA	NA	$63,000.00	NA	NA	$49,000.00
Guide Piles	$2,500.00	EA	NA	$12,500.00	NA	NA	NA	$10,000.00	NA	NA	$10,000.00
Floats	$40.00	SF	NA	$32,000.00	NA	NA	NA	$25,600.00	NA	NA	$25,600.00
BOAT HOUSE											
Footprint SF	$150.00	SF	NA	$360,000	NA	NA	NA	$360,000	NA	NA	$360,000
Hydraulic Trailer	$100,000.00	Ea	NA	$100,000	NA	NA	NA	$100,000	NA	NA	$100,000
Construction Subtotal			$55,200	$654,871	$312,784	$343,742	$556,712	$636,349	$574,433	$692,928	$1,256,152
Cost Adjustment for existing site@		40%	-$22,080								
Contingency @		15%	$8,280	$98,231	$46,918	$51,561	$83,507	$95,452	$86,165	$103,939	$188,423
Construction Total			**$41,400**	**$753,101**	**$359,701**	**$395,303**	**$640,219**	**$731,801**	**$660,598**	**$796,867**	**$1,444,574**
Survey and Testing											
Geotechnical Investigation		Est.	$0	$5,000	$15,000	$15,000	$15,000	$5,000	$15,000	$15,000	$20,000
Environmental Survey		Est.	$750	$10,000	$10,000	$10,000	$10,000	$5,000	$10,000	$10,000	$10,000
Topographic Survey/Bathymetry		Est.	$1,500	$1,500	$2,500	$2,500	$2,500	$1,500	$2,500	$2,500	$2,500
Permitting		Est.	w/design services	$25,000	$25,000	$25,000	$25,000	$25,000	$25,000	$25,000	$25,000
Design Development		10%	$4,140	$75,310	$35,970	$39,530	$64,022	$73,180	$66,060	$79,687	$144,457
Bid Phase Services		0.5%	$207	$3,766	$1,799	$1,977	$3,201	$3,659	$3,303	$3,984	$7,223
Construction Admin @ Monitoring		2%	$828	$15,062	$7,194	$7,906	$12,804	$14,636	$13,212	$15,937	$28,891
Consultant Services Total			**$7,425**	**$135,638**	**$97,463**	**$101,913**	**$132,527**	**$127,975**	**$135,075**	**$152,108**	**$238,072**
PROJECT BUDGET			**$48,000**	**$888,000**	**$457,000**	**$497,000**	**$772,000**	**$859,000**	**$795,000**	**$948,000**	**$1,682,000**

Preferred Site (#7)

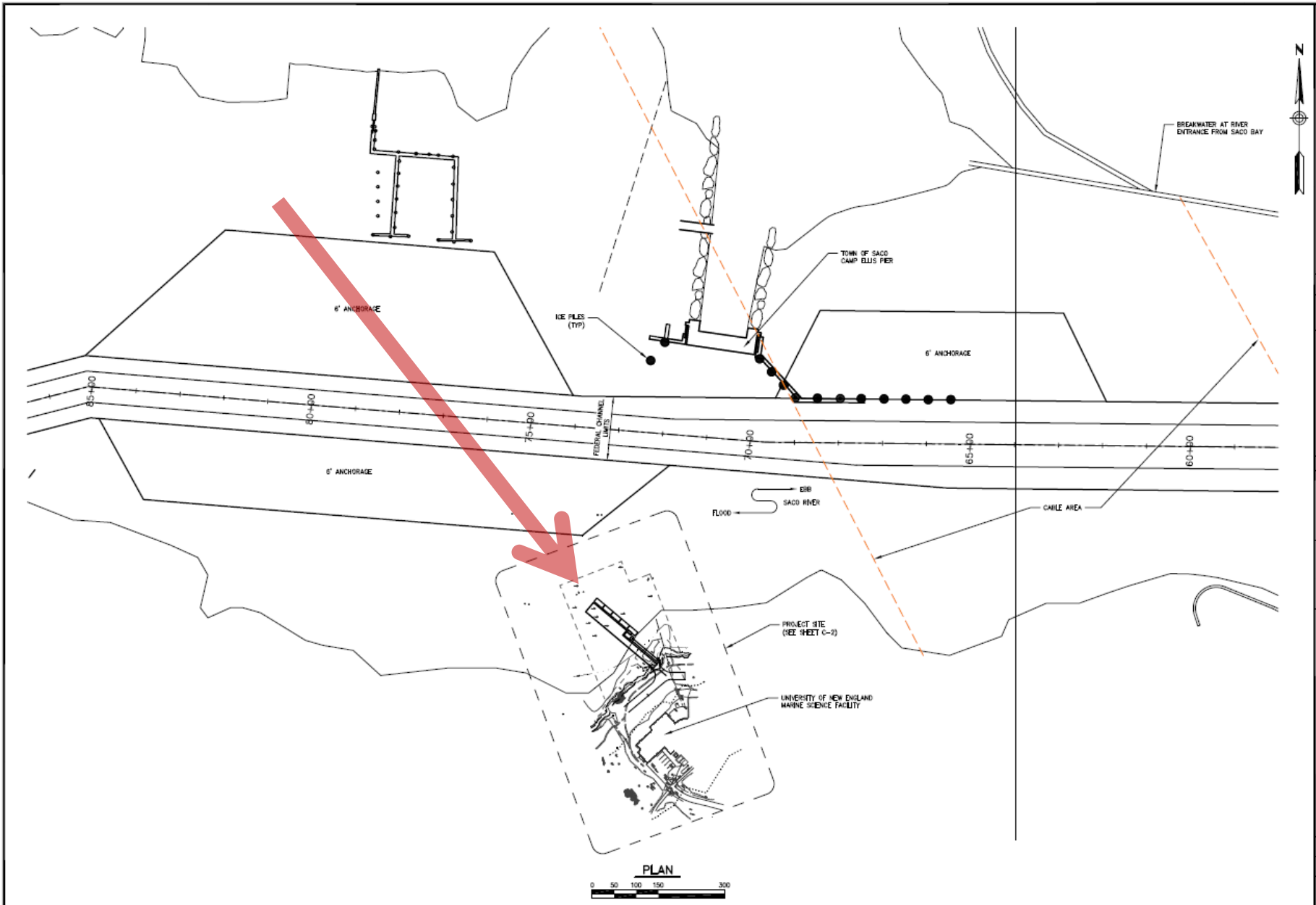

Pier Site Plan

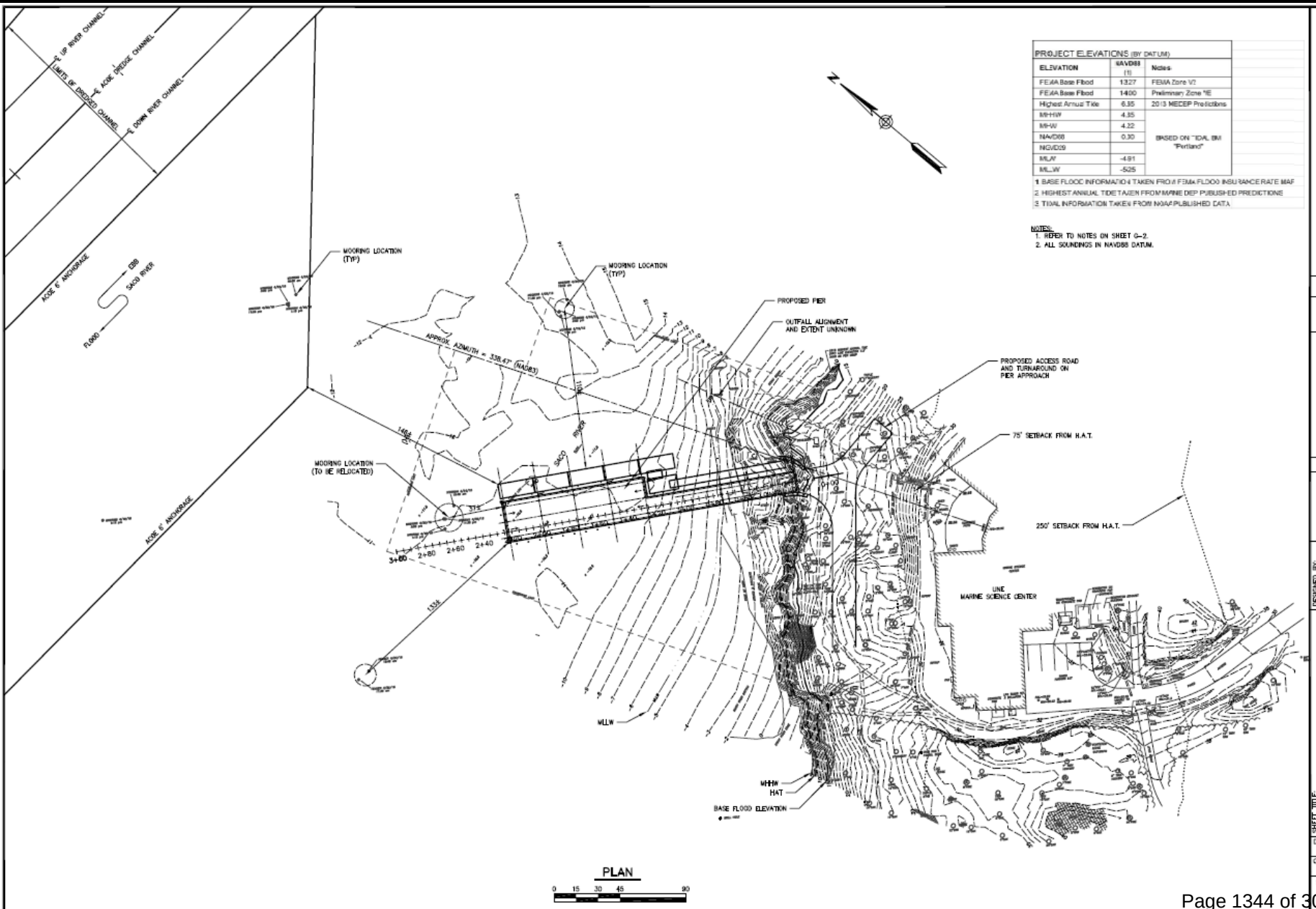

Pier Site Plan - Impacts

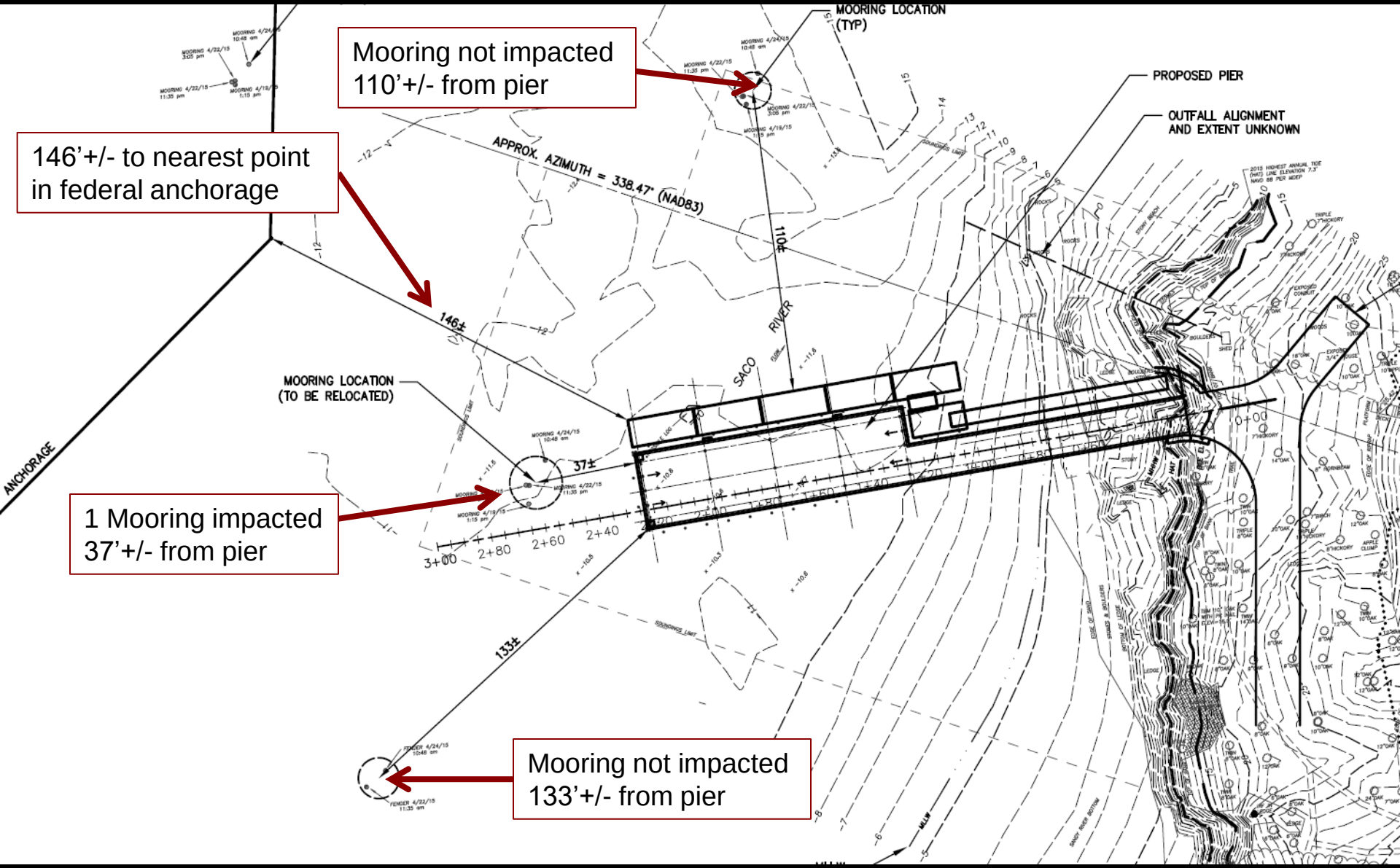

Pier Plan & Elevation

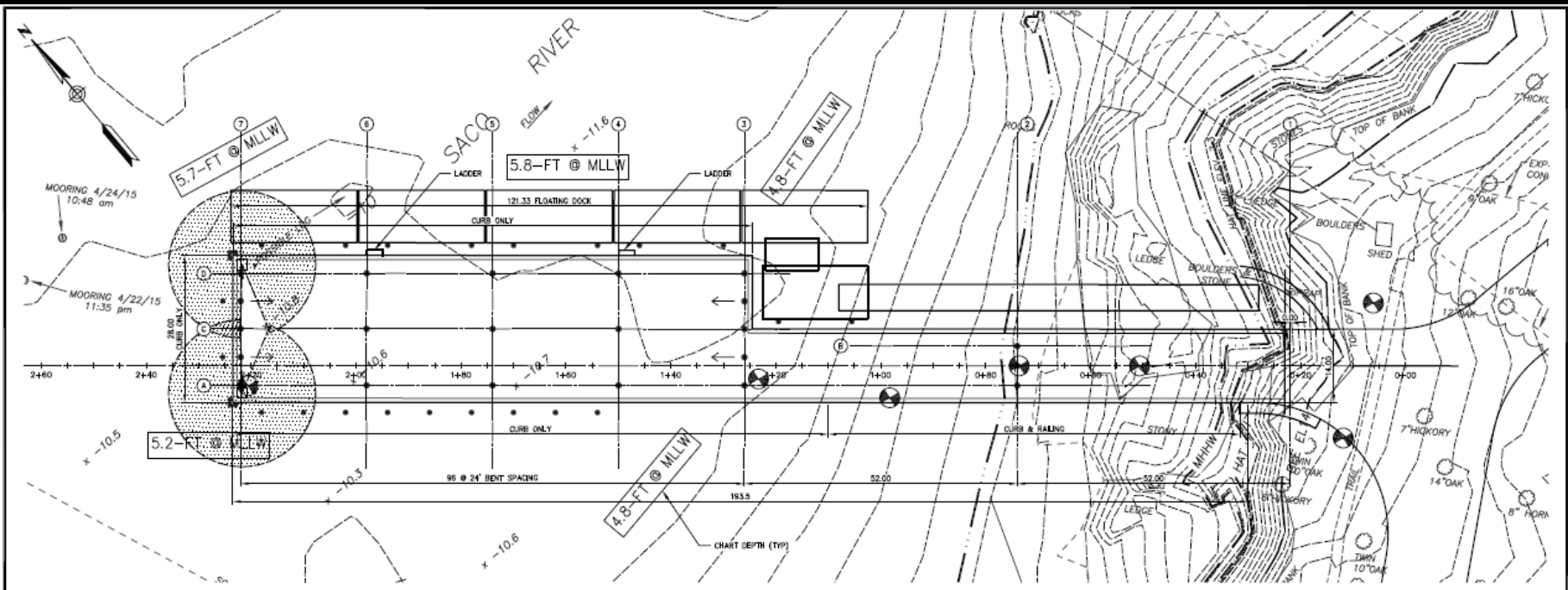

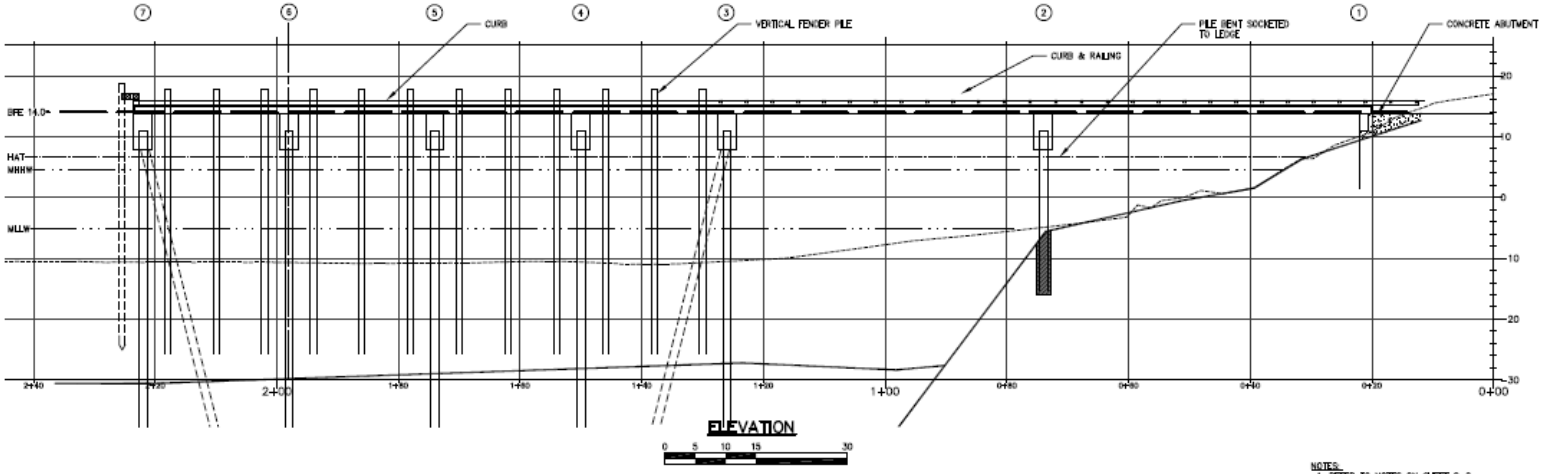

NOTES:
1. REFER TO NOTES ON SHEET G-2.
2. ALL SURVEY SOUNDINGS IN NAVD88 DATUM. CHART DEPTHS ARE NOTED.

BAKER DESIGN CONSULTANTS
Civil, Marine, and Structural Engineering
1 Spruce Road • Freeport • Maine • (207) 865-4724 • mail@bakerdesignconsultants.com

NO.	REVISION	DATE	INIT.
D	REVISED SUBSTRUCTURE	12-4-15	BJB
C	REVISED LAYOUT	9-15-15	BJB
B	PROGRESS REVIEW	7-22-15	BJB
A	PROGRESS REVIEW SUBMISSION	6-25-15	BJB

DESIGNED BY: JJC
DRAWN BY:
CHECKED BY: BJB
SCALE: AS SHOWN

SHEET TITLE: PIER PLAN & ELEVATION
PROJECT: UNIVERSITY OF NEW ENGLAND UNE MSC WATERFRONT BIDDEFORD, MAINE
DATE: FEBRUARY 2015
CONTRACT NO. 15-07
SHEET NO. S-1
REV. D

Aerial Photos


UNE PIER SITE
September 2014
Legend
0000
Red Oak Ln
N
400 ft
Google earth

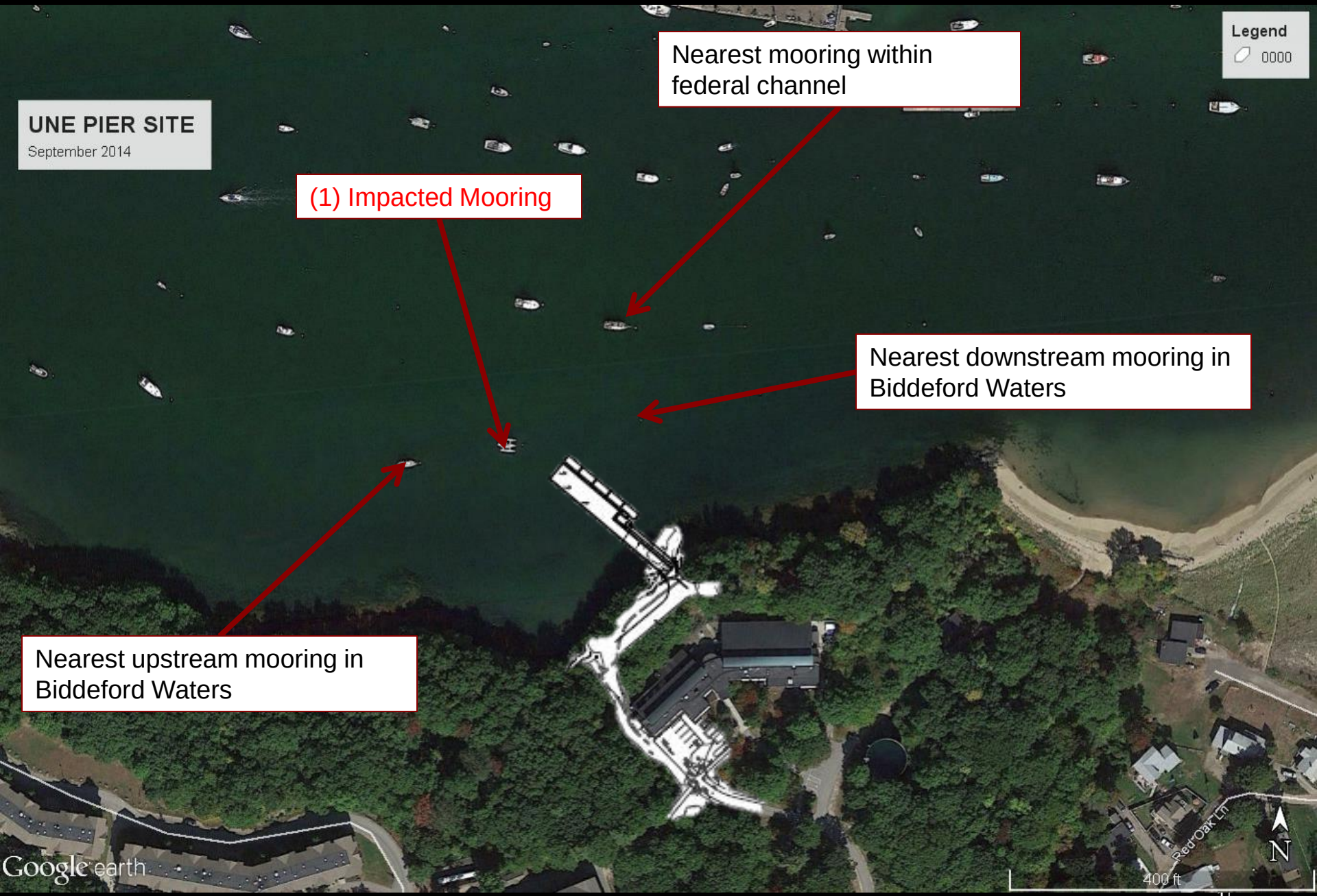
UNE PIER SITE
September 2014
Legend
0000
Nearest mooring within federal channel
(1) Impacted Mooring
Nearest downstream mooring in Biddeford Waters
Nearest upstream mooring in Biddeford Waters
Red Oak Ln
N
400 ft
Google earth

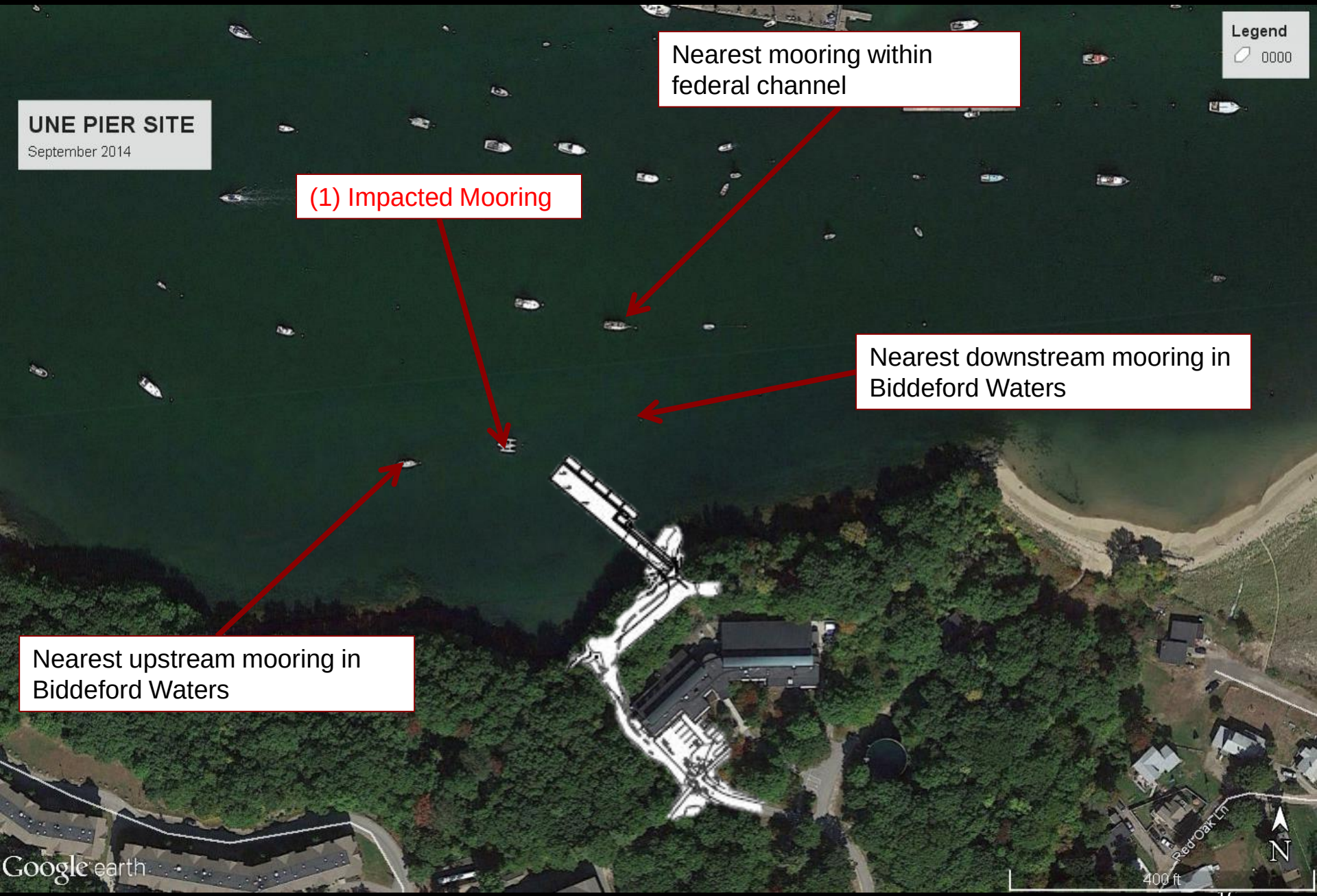
UNE PIER SITE
September 2014
Legend
0000
Nearest mooring within federal channel
(1) Impacted Mooring
Nearest downstream mooring in Biddeford Waters
Nearest upstream mooring in Biddeford Waters
Red Oak Ln
N
400 ft
Google earth


UNE PIER SITE
September 2013
Legend
0000
Red Oak Ln
N
400 ft
Google earth


UNE PIER SITE
May 2012
Legend
0000
Red Oak Ln
N
400 ft
Google earth


UNE PIER SITE
April 2012
Legend
0000
Red Oak Ln
N
400 ft
Google earth


UNE PIER SITE
November 2011
Legend
0000
Red Oak Ln
N
400 ft
Google earth


UNE PIER SITE
May 2010
Legend
0000
Red Oak Ln
N
400 ft
Google earth


UNE PIER SITE
September 2007
Legend
0000
Red Oak Ln
N
400 ft
Google earth


Legend
0000
UNE PIER SITE
October 2006
Red Oak Ln
N
400 ft
Google earth


UNE PIER SITE
April 2006
Legend
0000
Red Oak Ln
N
400 ft
Google earth

Site Photos


Approximate Pier Location
Photo Date: 11/9/2015

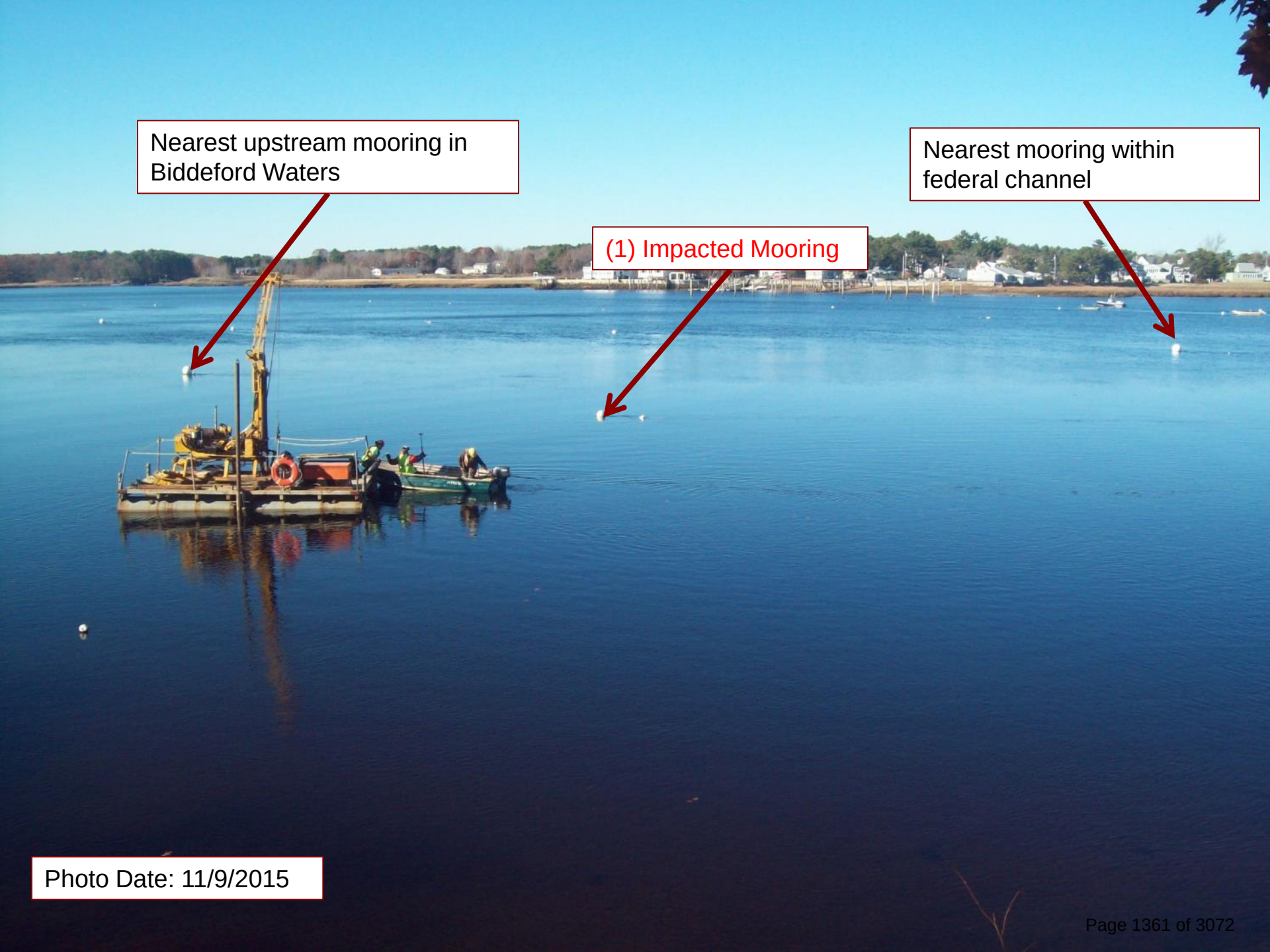
Nearest upstream mooring in Biddeford Waters
(1) Impacted Mooring
Nearest mooring within federal channel
Photo Date: 11/9/2015

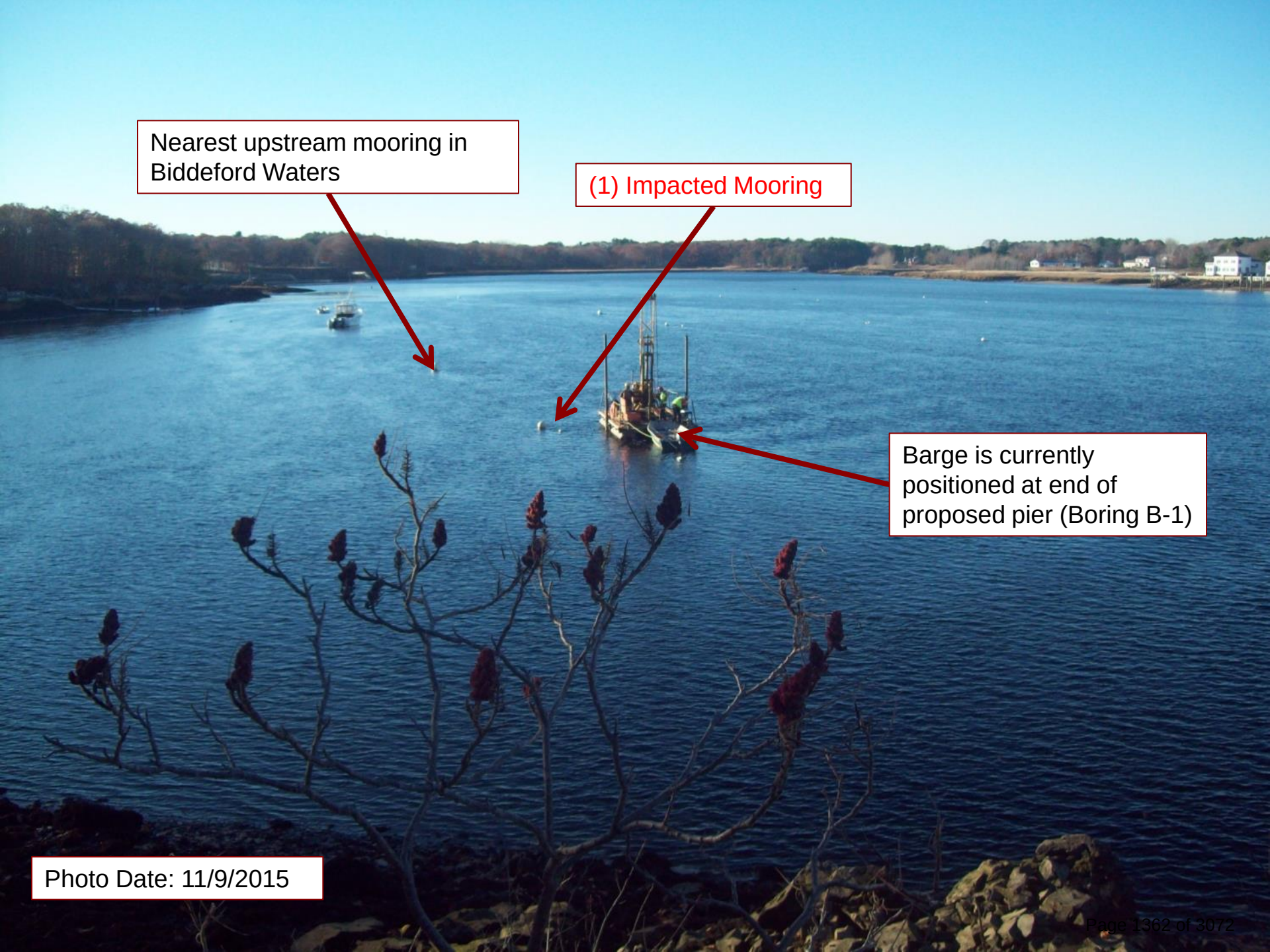
Nearest upstream mooring in Biddeford Waters
(1) Impacted Mooring
Barge is currently positioned at end of proposed pier (Boring B-1)
Photo Date: 11/9/2015


Nearest downstream mooring in Biddeford Waters
Photo Date: 11/9/2015

Tidal & Current Study

Source:

Saco River and Camp Ellis Beach Section 111 Shore Damage Mitigation Study, Appendix C – Data Collection and Modeling Report, prepared by Woods Hole Group and Aubrey Consulting for the US Army Corps of Engineers, October 2006

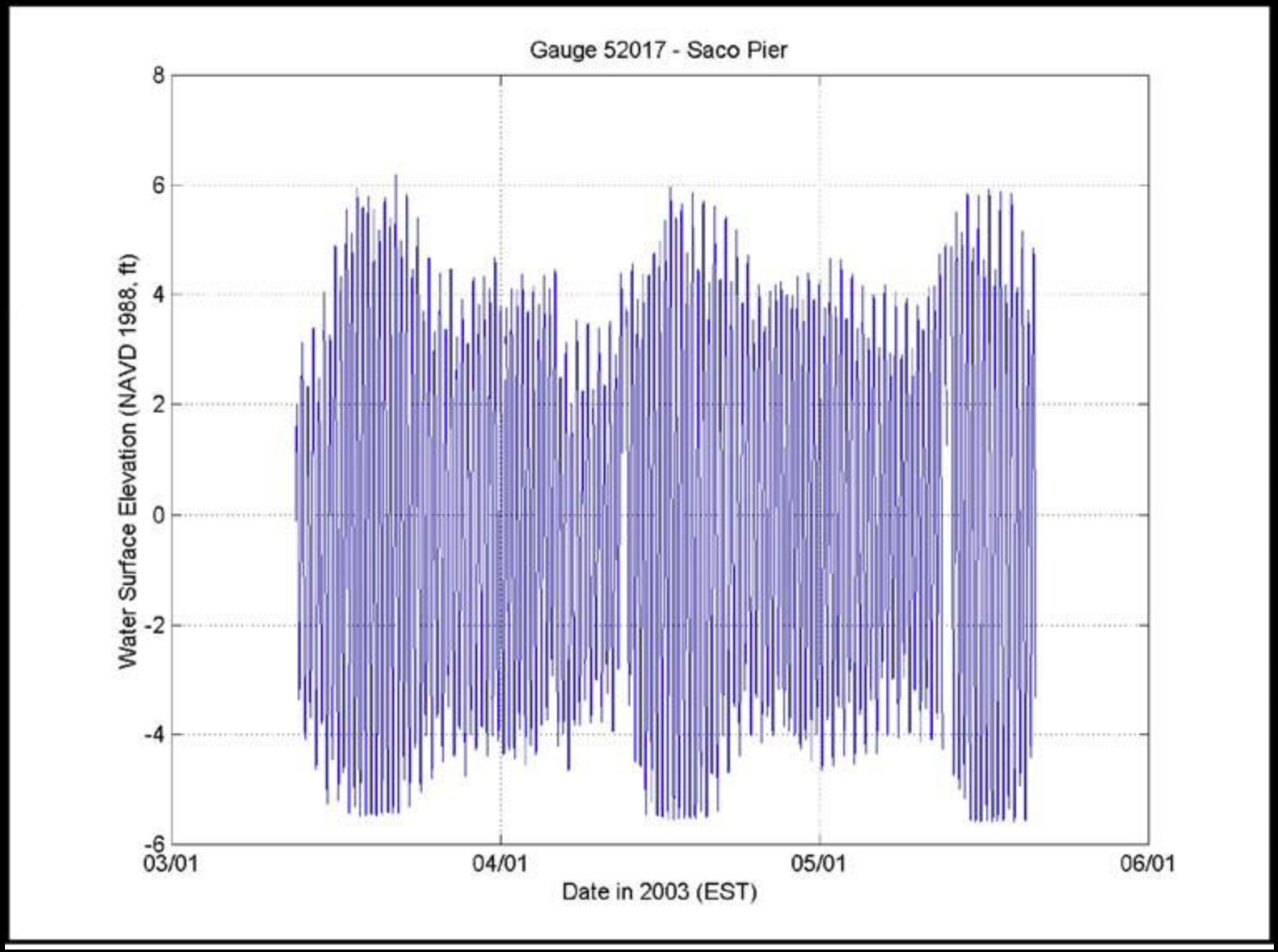
Gauge 52017 - Saco Pier
Water Surface Elevation (NAVD 1988, ft)
8
6
4
2
0
-2
-4
-6
03/01
04/01
05/01
06/01
Date in 2003 (EST)

PROJECT ELEVATIONS (BY DATUM)

ELEVATION	NAVD88 (ft)	Notes
FEMA Base Flood	13.27	FEMA Zone V2
FEMA Base Flood	14.00	Preliminary Zone VE
Highest Annual Tide	6.65	2013 MEDEP Predictions
MHHW	4.65	BASED ON TIDAL BM "Portland"
MHW	4.22	
NAVD88	0.00	
NGVD29		
MLW	-4.91	
MLLW	-5.25	

1. BASE FLOOD INFORMATION TAKEN FROM FEMA FLOOD INSURANCE RATE MAP
2. HIGHEST ANNUAL TIDE TAKEN FROM MAINE DEP PUBLISHED PREDICTIONS
3. TIDAL INFORMATION TAKEN FROM NOAA PUBLISHED DATA

Observations suggest that this location on the Saco River at times sees higher highs and lower lows than the Portland gage for a given tide cycle, possibly due to river influence.

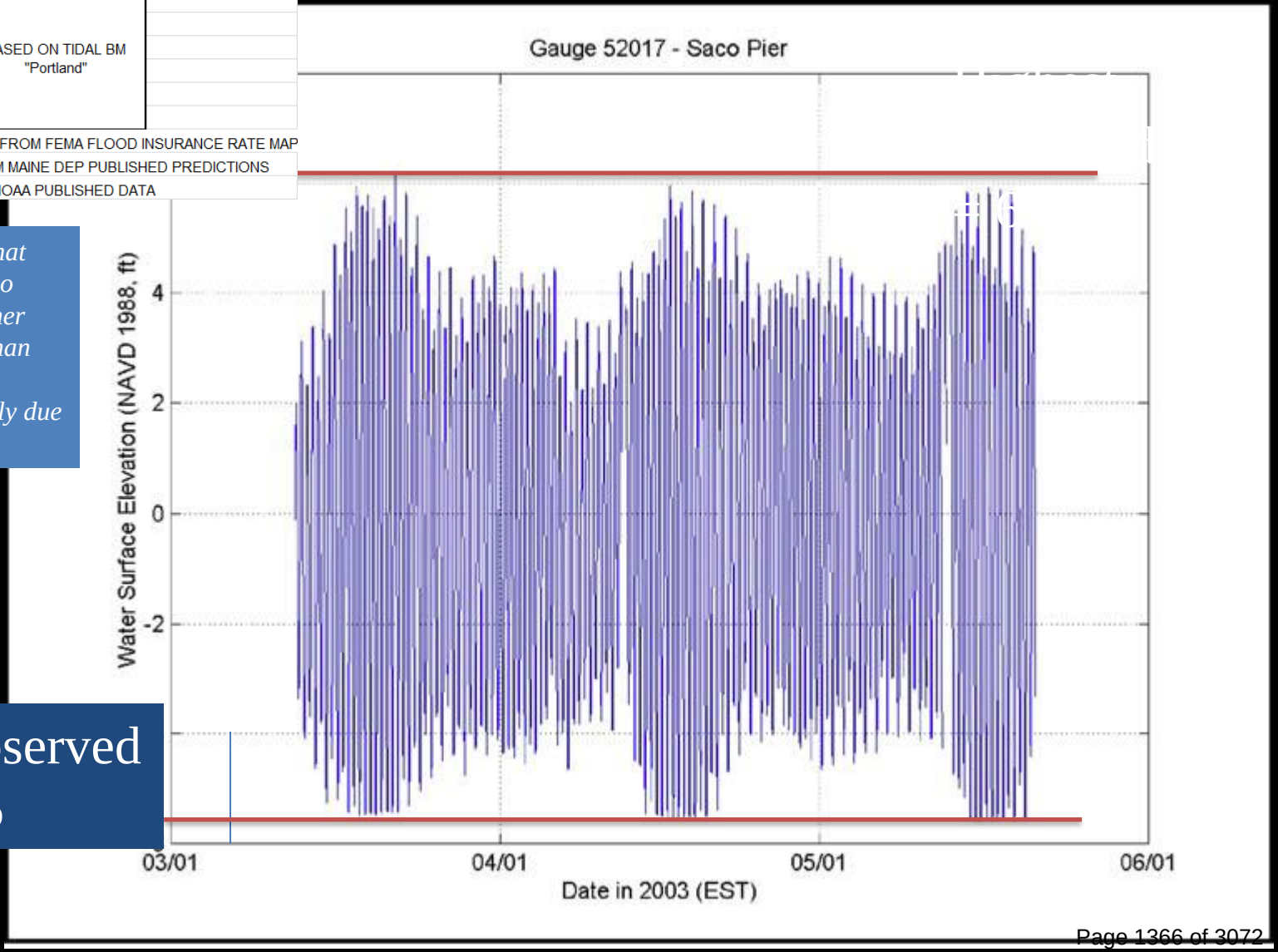

Lowest Observed Tide = -5.6

Table 6-1. Survey dates, locations, repeat interval, and temporal coverage of the ADCP transects.

Location	Transect	Date	Repeat Internal	# of Transects
Inland Jetty	1	May 14	1.5 hrs	9
North Jetty (E-W)	2	May 14	1.5 hrs	9
North Jetty (W-E)	3	May 14	1.5 hrs	6
Alongshore	4	May 14	1.5 hrs	5
Shore to end North Jetty	5	May 14	1.5 hrs	6
North Jetty to South Jetty	6	May 14	1.5 hrs	9
Jettied Channel	7	May 14	1.0 hrs during low tide	2

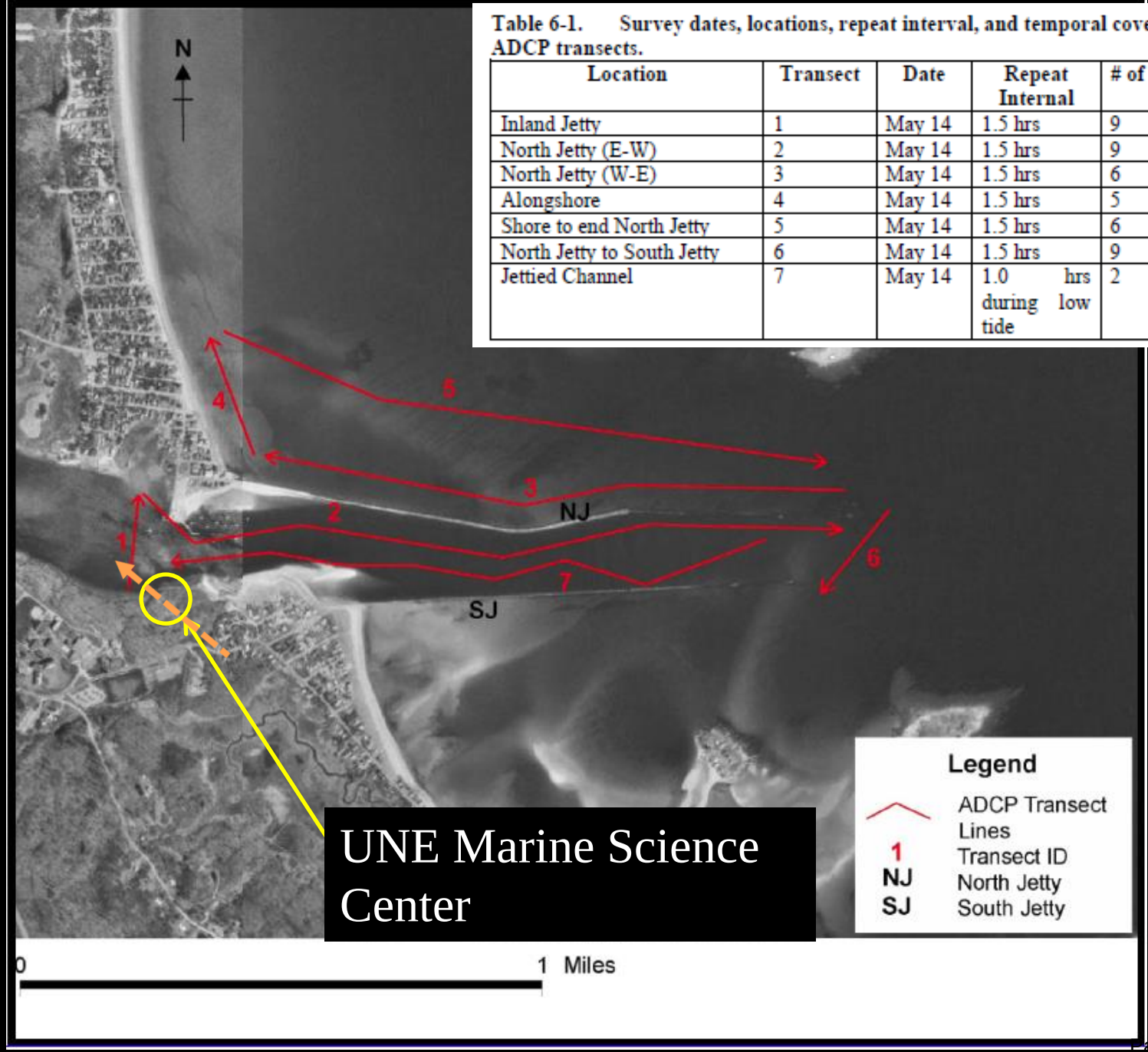

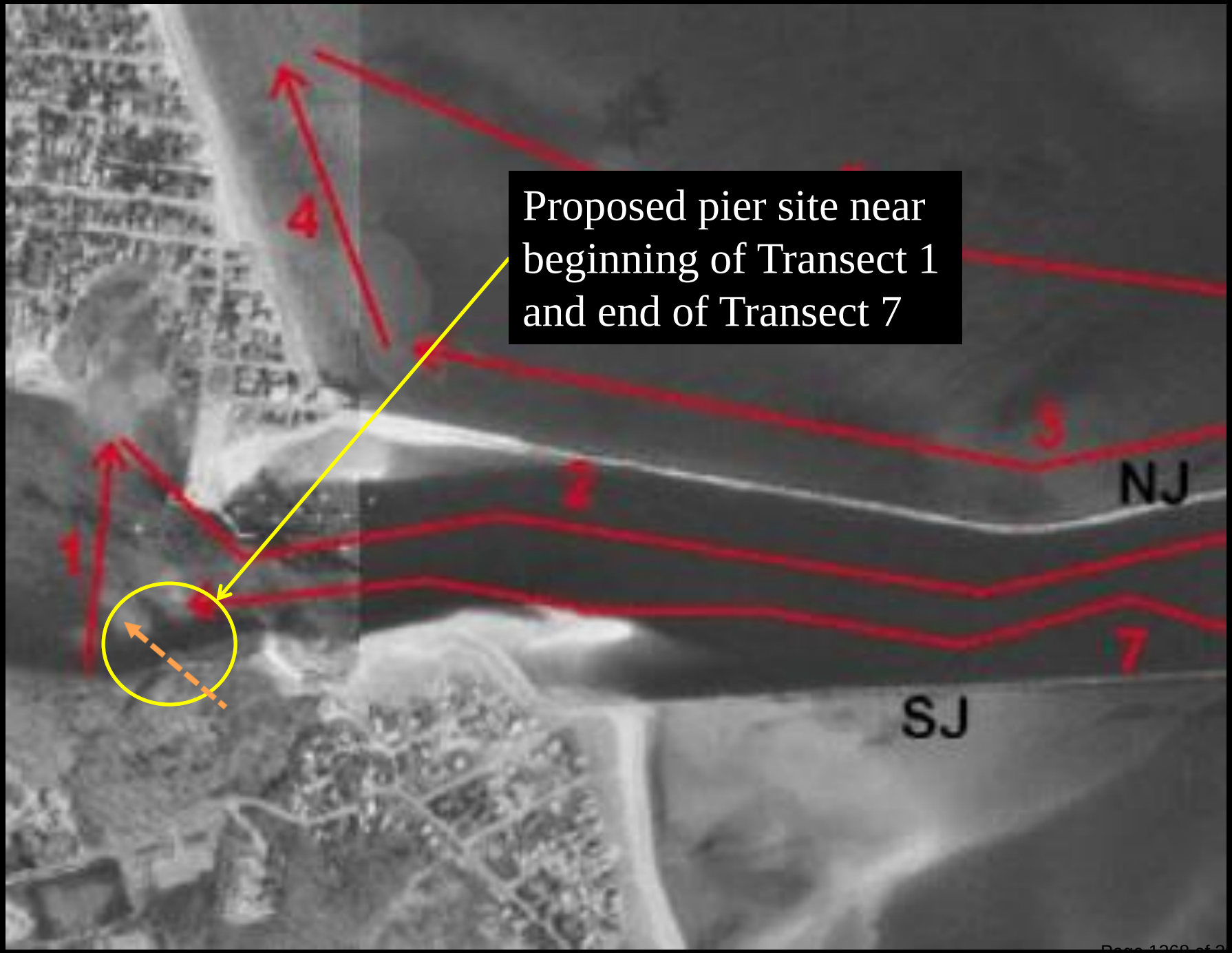
Proposed pier site near beginning of Transect 1 and end of Transect 7
NJ
SJ
1
3
4
7

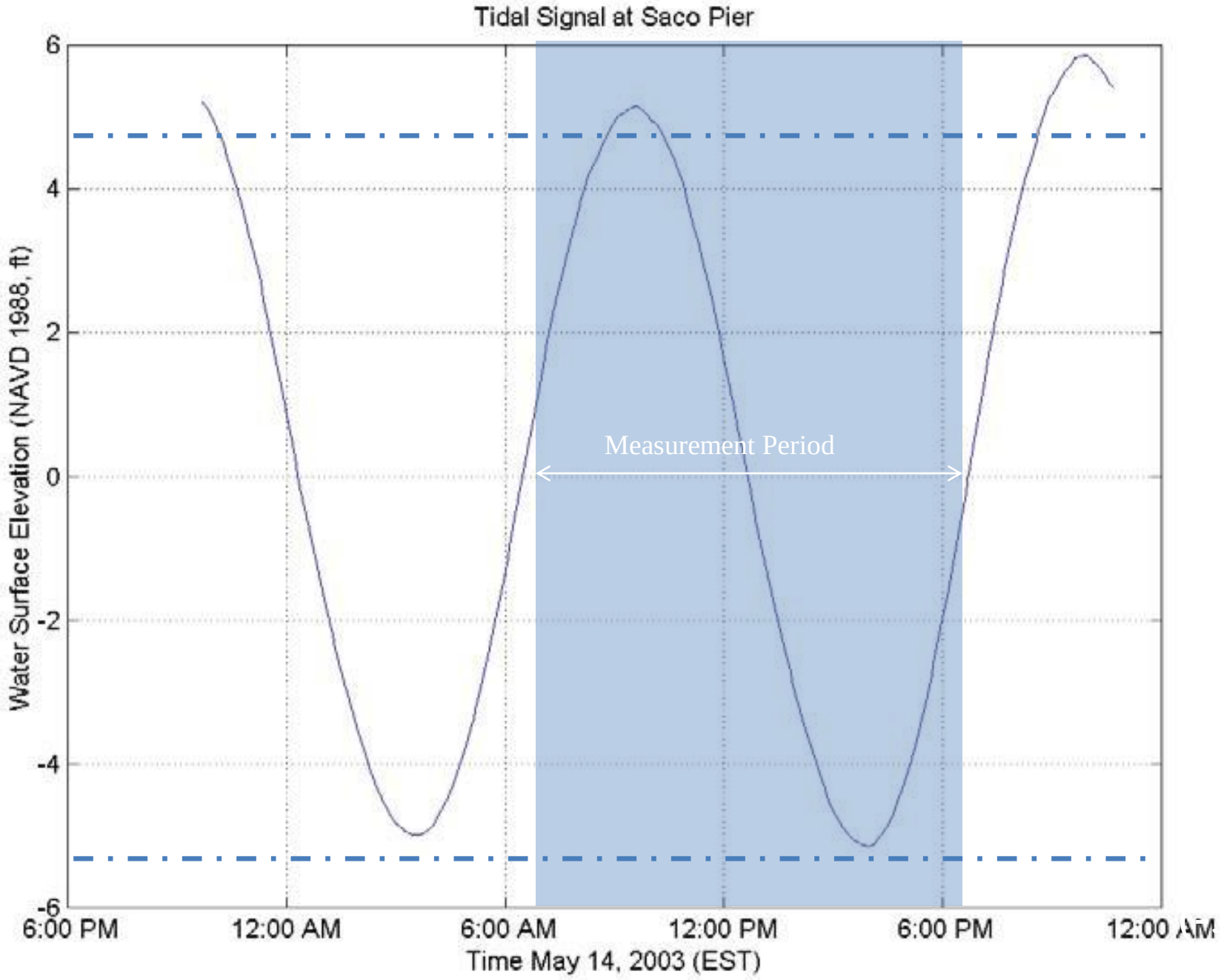
Tidal Signal at Saco Pier
Water Surface Elevation (NAVD 1988, ft)
6
4
2
0
-2
-4
-6
Measurement Period
6:00 PM
12:00 AM
6:00 AM
12:00 PM
6:00 PM
12:00 AM
Time May 14, 2003 (EST)

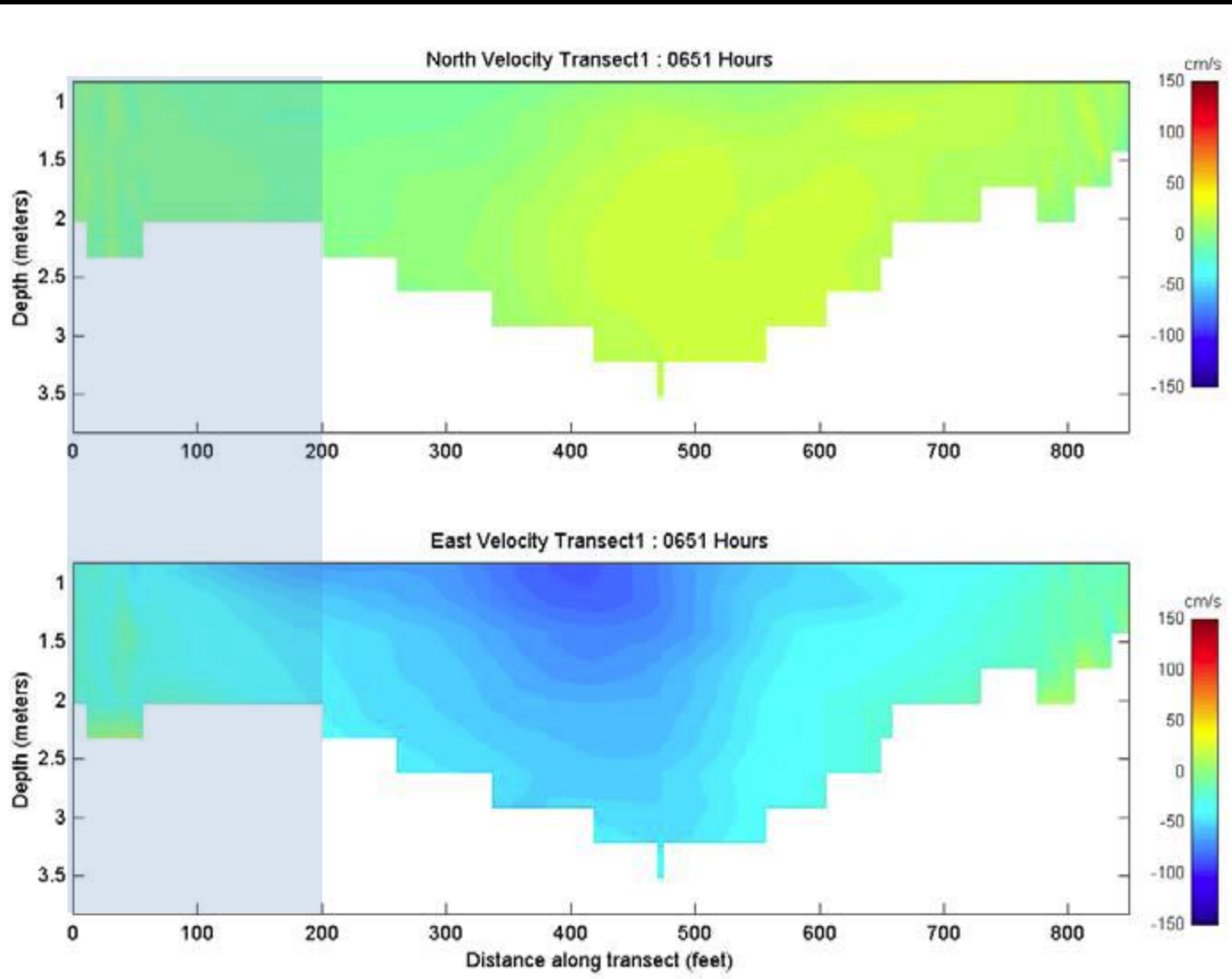
North Velocity Transect1 : 0651 Hours
Depth (meters)
1
1.5
2
2.5
3
3.5
0
100
200
300
400
500
600
700
800
cm/s
150
100
50
0
-50
-100
-150
East Velocity Transect1 : 0651 Hours
Depth (meters)
Distance along transect (feet)

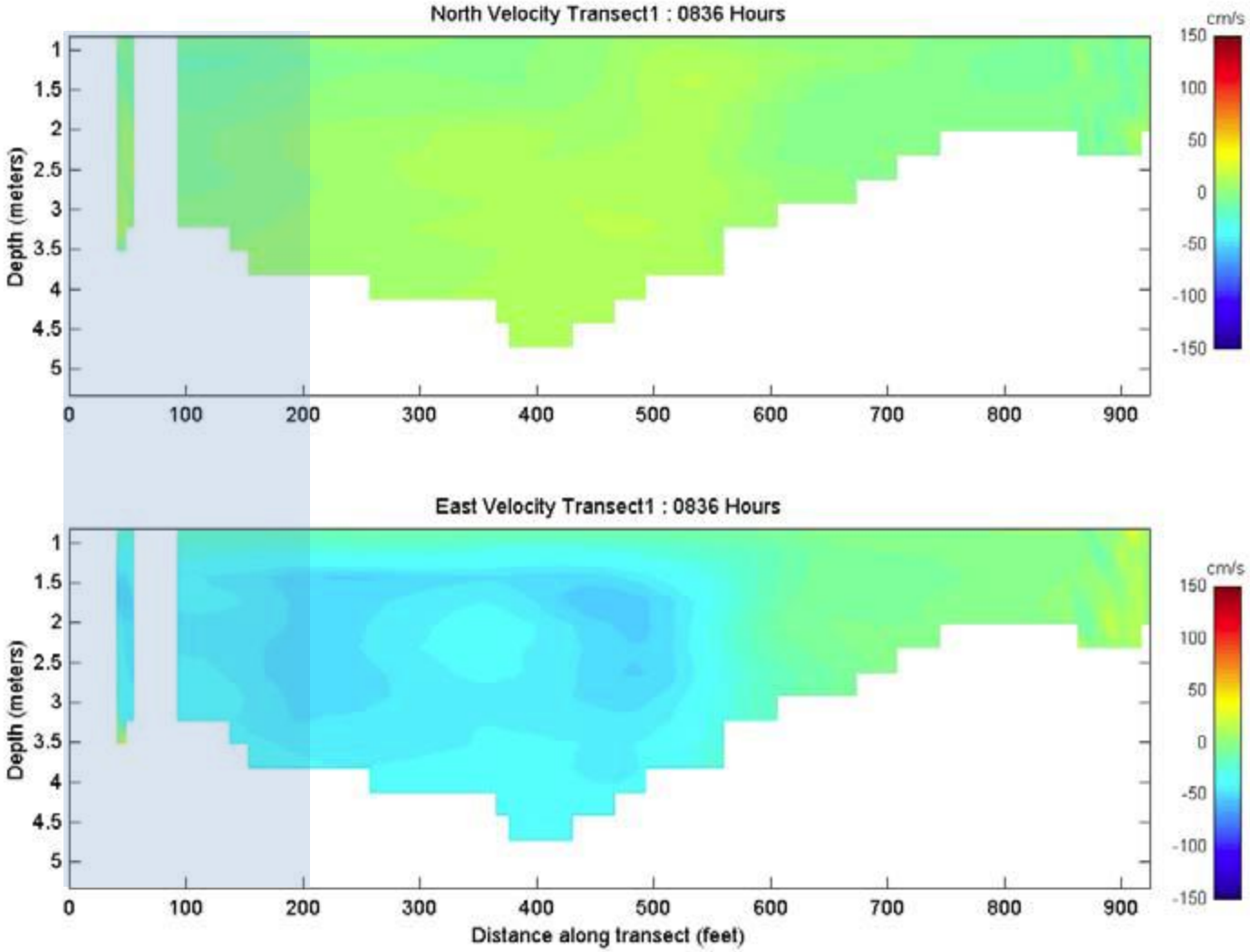
North Velocity Transect1 : 0836 Hours
Depth (meters)
1
1.5
2
2.5
3
3.5
4
4.5
5
0
100
200
300
400
500
600
700
800
900
cm/s
150
100
50
0
-50
-100
-150
East Velocity Transect1 : 0836 Hours
Depth (meters)
Distance along transect (feet)

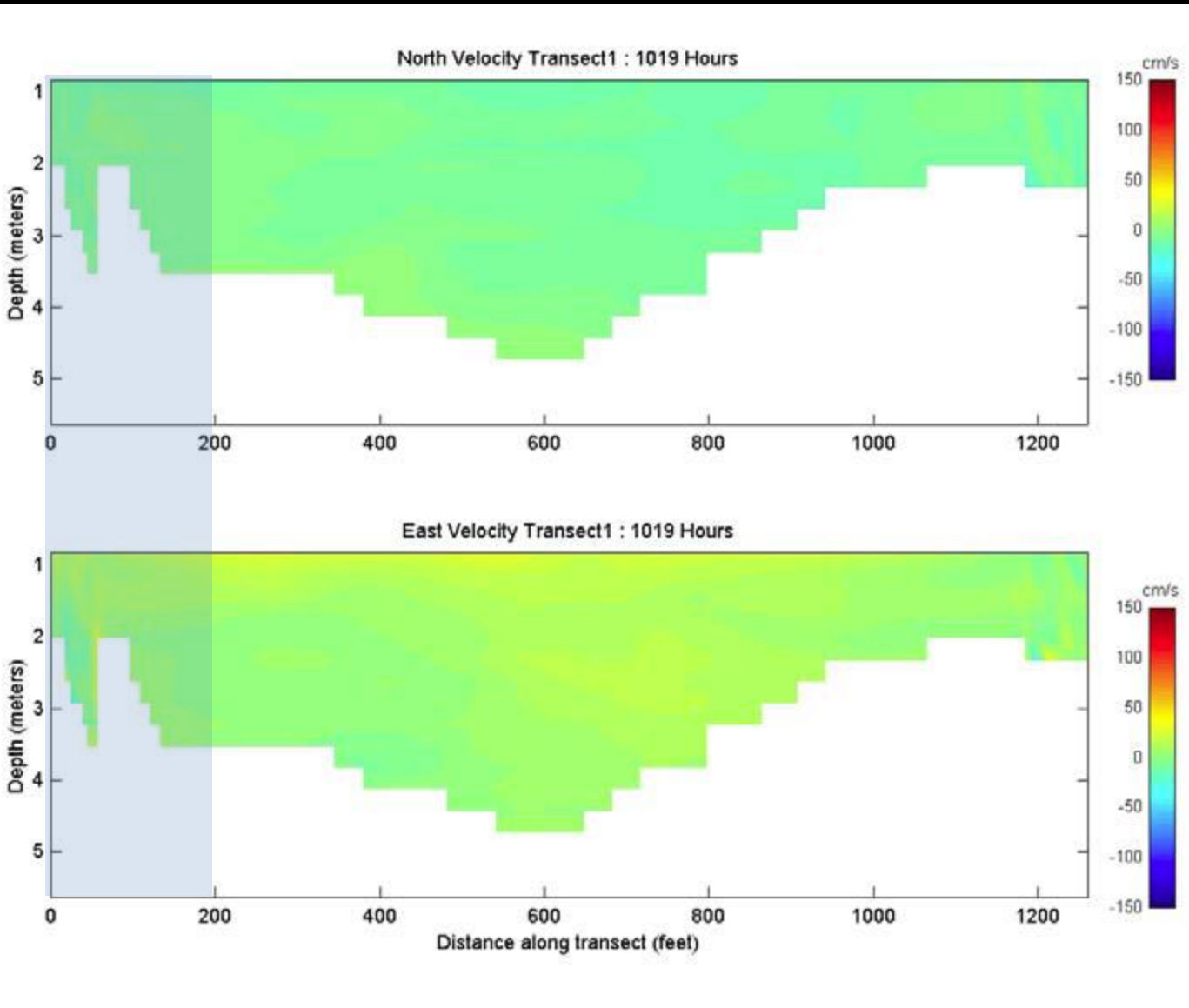
North Velocity Transect1 : 1019 Hours
Depth (meters)
1
2
3
4
5
0
200
400
600
800
1000
1200
cm/s
150
100
50
0
-50
-100
-150
East Velocity Transect1 : 1019 Hours
Depth (meters)
Distance along transect (feet)

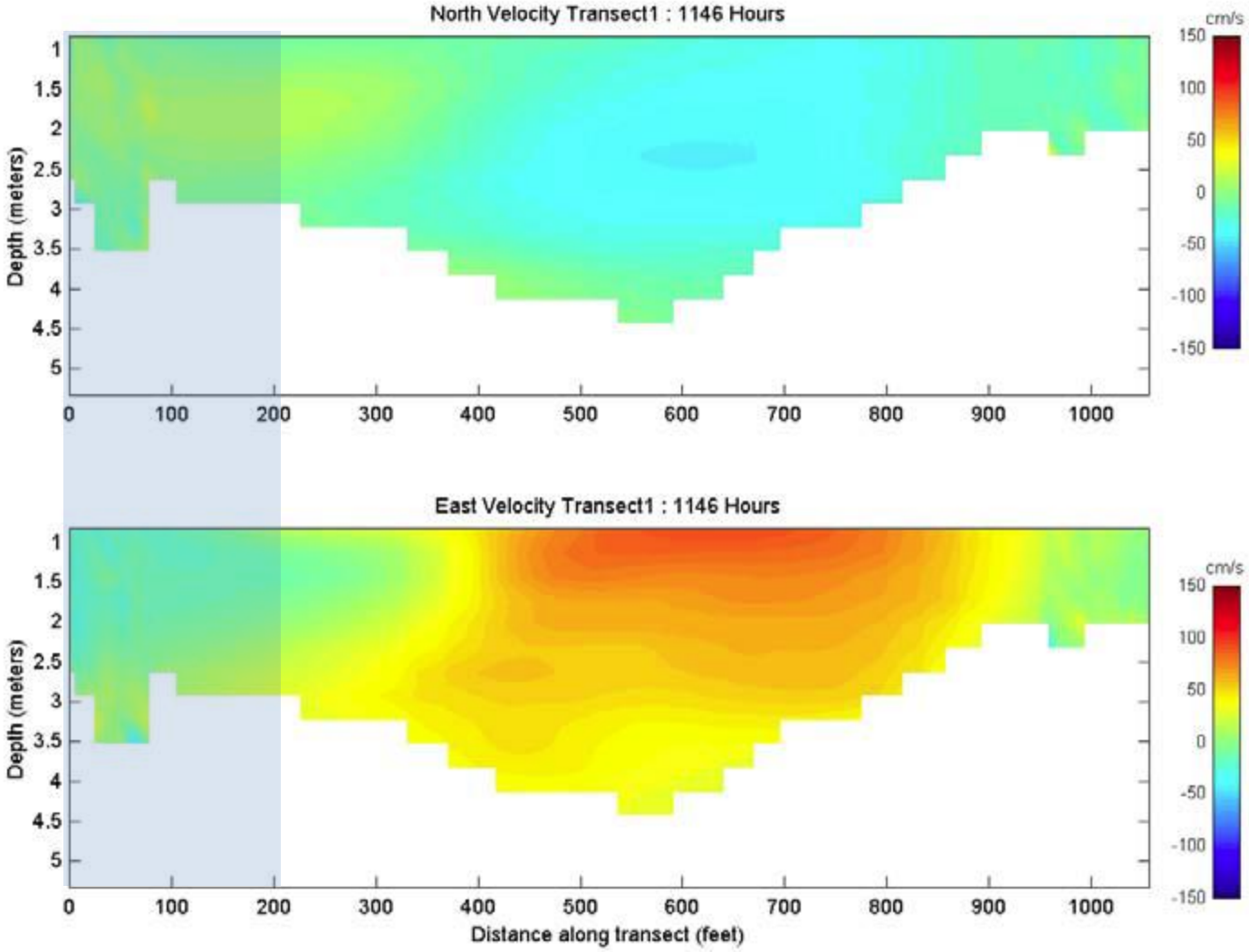
North Velocity Transect1 : 1146 Hours
East Velocity Transect1 : 1146 Hours
Depth (meters)
Distance along transect (feet)
cm/s
150
100
50
0
-50
-100
-150
1
1.5
2
2.5
3
3.5
4
4.5
5
0
100
200
300
400
500
600
700
800
900
1000

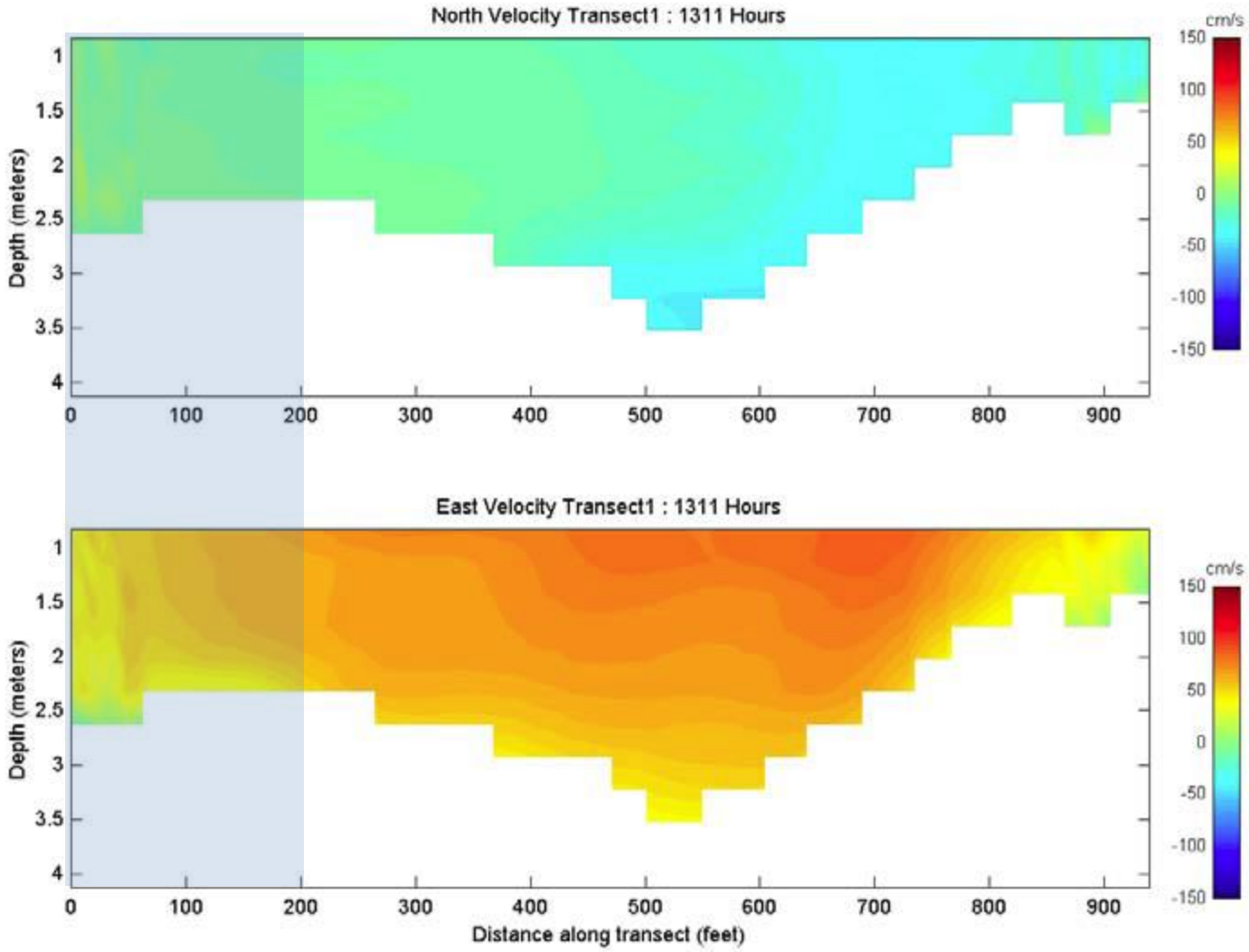
North Velocity Transect1 : 1311 Hours
Depth (meters)
1
1.5
2
2.5
3
3.5
4
0
100
200
300
400
500
600
700
800
900
cm/s
150
100
50
0
-50
-100
-150
East Velocity Transect1 : 1311 Hours
Depth (meters)
Distance along transect (feet)

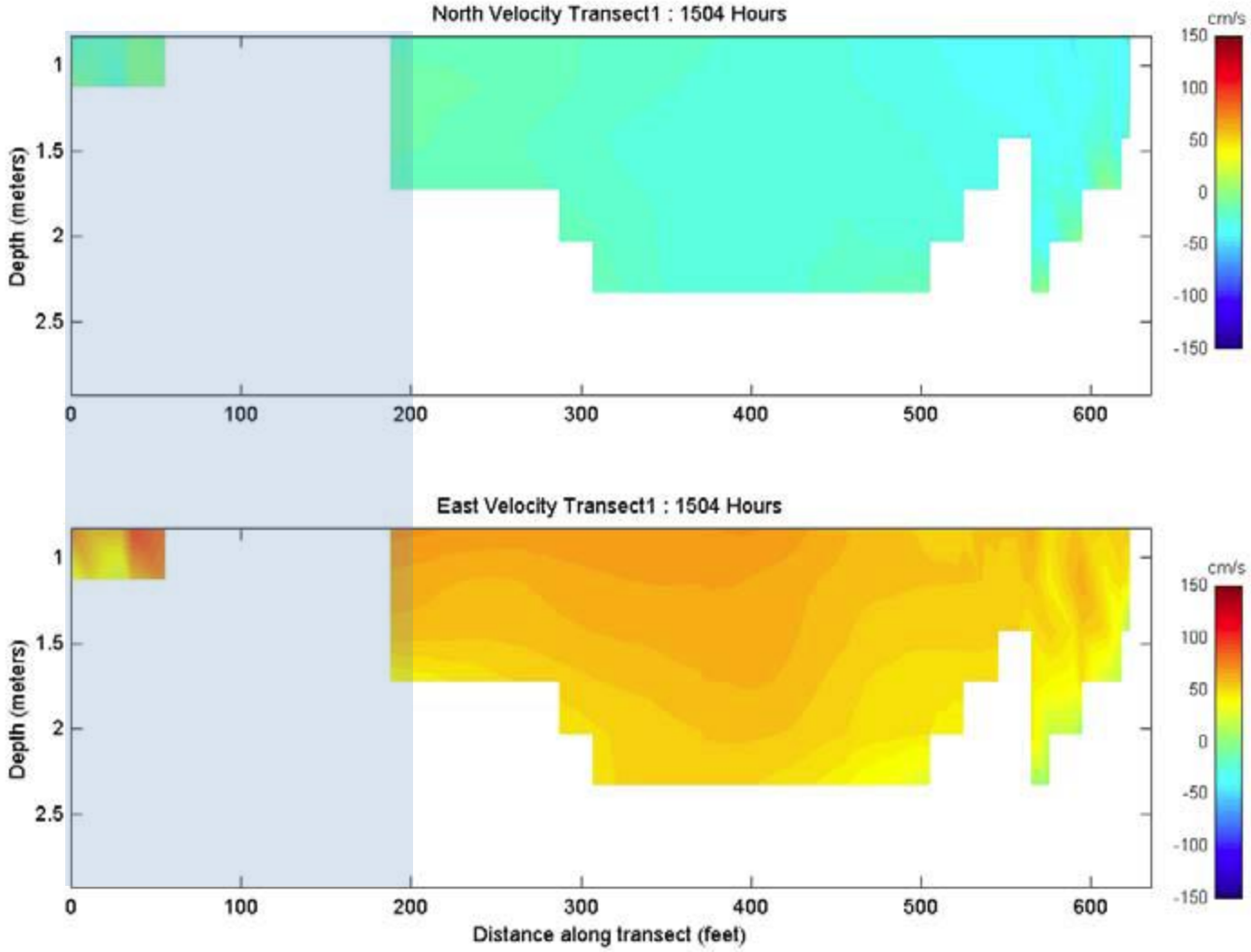
North Velocity Transect1 : 1504 Hours
Depth (meters)
1
1.5
2
2.5
0
100
200
300
400
500
600
cm/s
150
100
50
0
-50
-100
-150
East Velocity Transect1 : 1504 Hours
Depth (meters)
1
1.5
2
2.5
0
100
200
300
400
500
600
Distance along transect (feet)
cm/s
150
100
50
0
-50
-100
-150

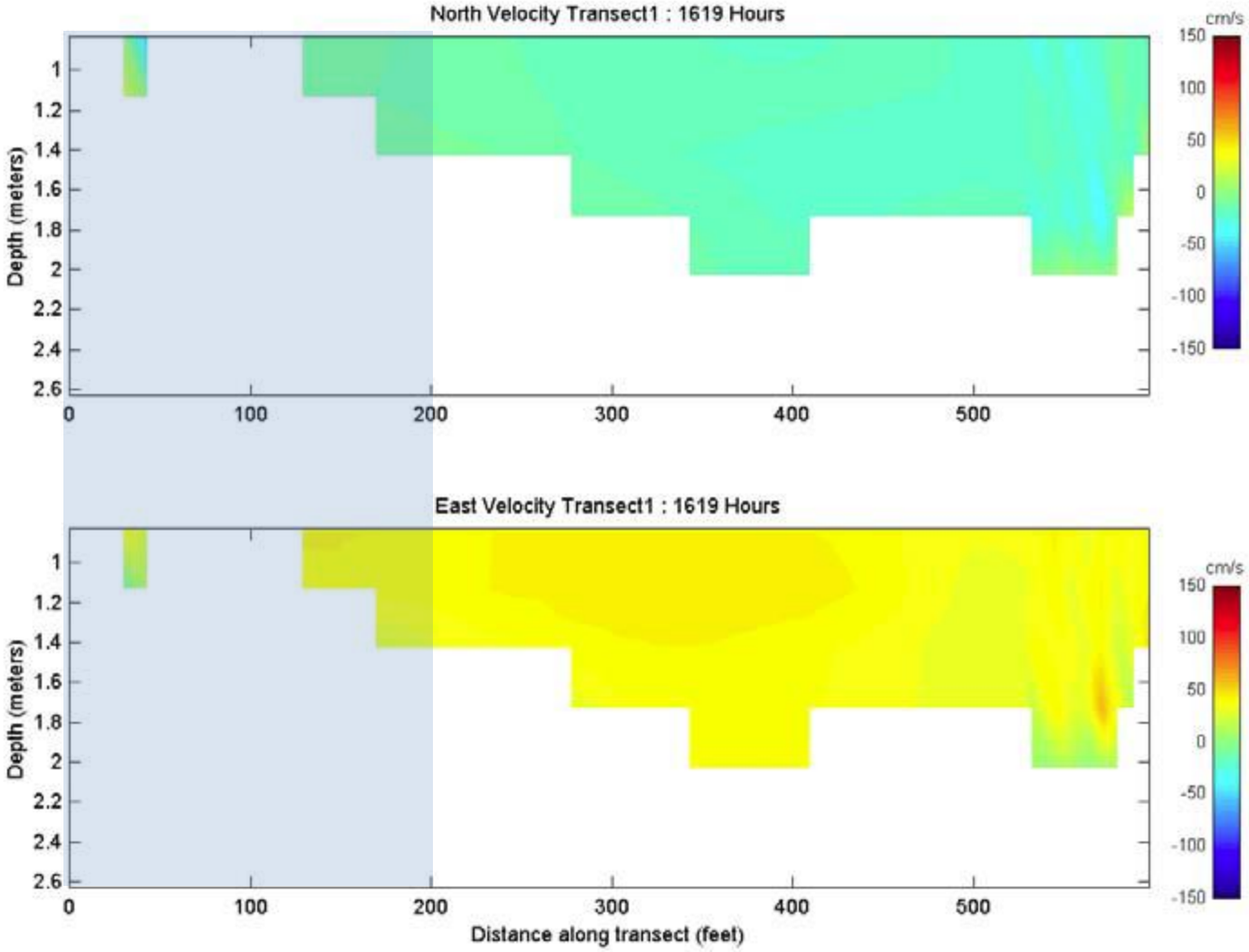
North Velocity Transect1 : 1619 Hours
Depth (meters)
1
1.2
1.4
1.6
1.8
2
2.2
2.4
2.6
0
100
200
300
400
500
cm/s
150
100
50
0
-50
-100
-150
East Velocity Transect1 : 1619 Hours
Depth (meters)
Distance along transect (feet)

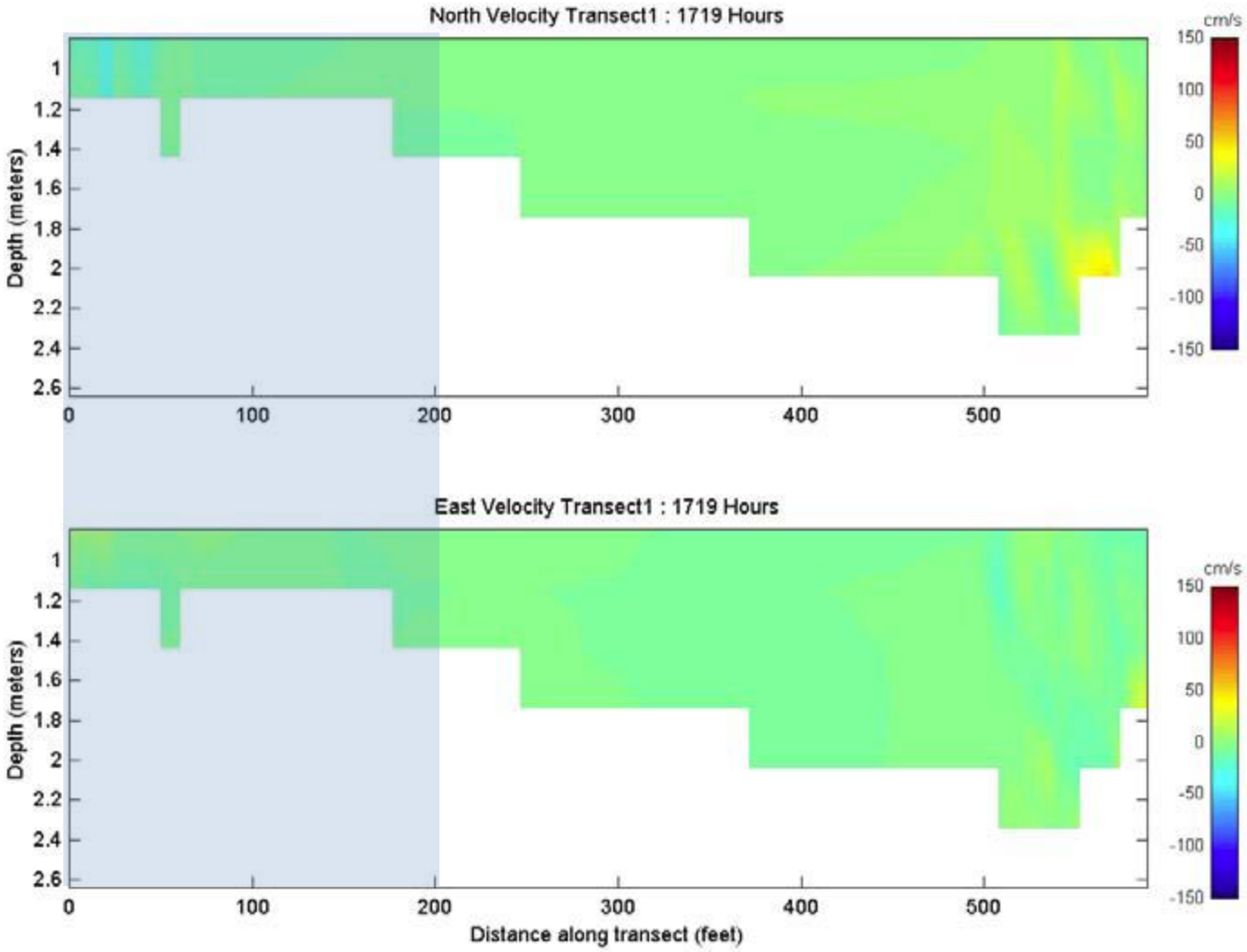
North Velocity Transect1 : 1719 Hours
Depth (meters)
1
1.2
1.4
1.6
1.8
2
2.2
2.4
2.6
0
100
200
300
400
500
cm/s
150
100
50
0
-50
-100
-150
East Velocity Transect1 : 1719 Hours
Depth (meters)
Distance along transect (feet)

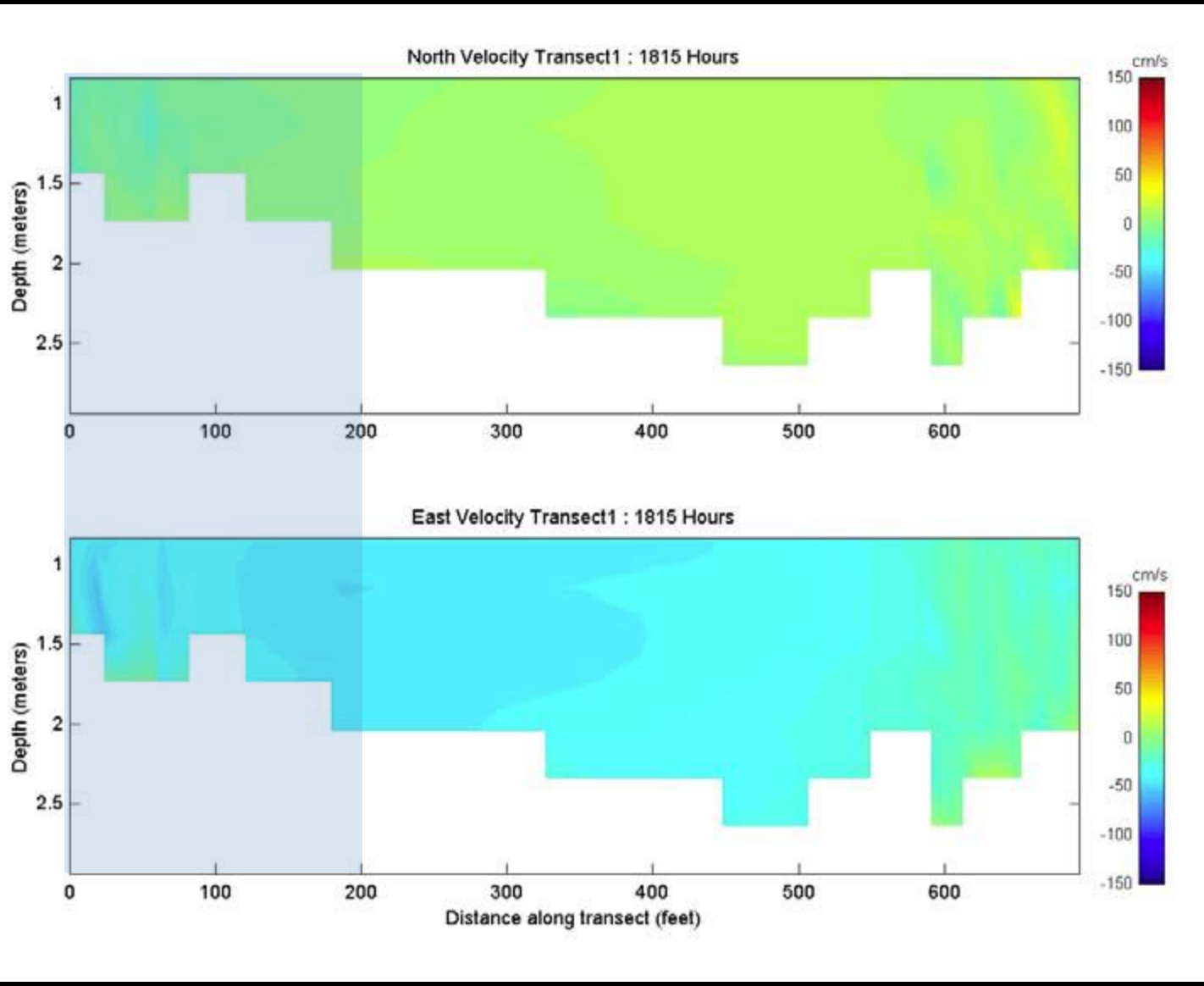
North Velocity Transect1 : 1815 Hours
Depth (meters)
1
1.5
2
2.5
0
100
200
300
400
500
600
cm/s
150
100
50
0
-50
-100
-150
East Velocity Transect1 : 1815 Hours
Depth (meters)
Distance along transect (feet)

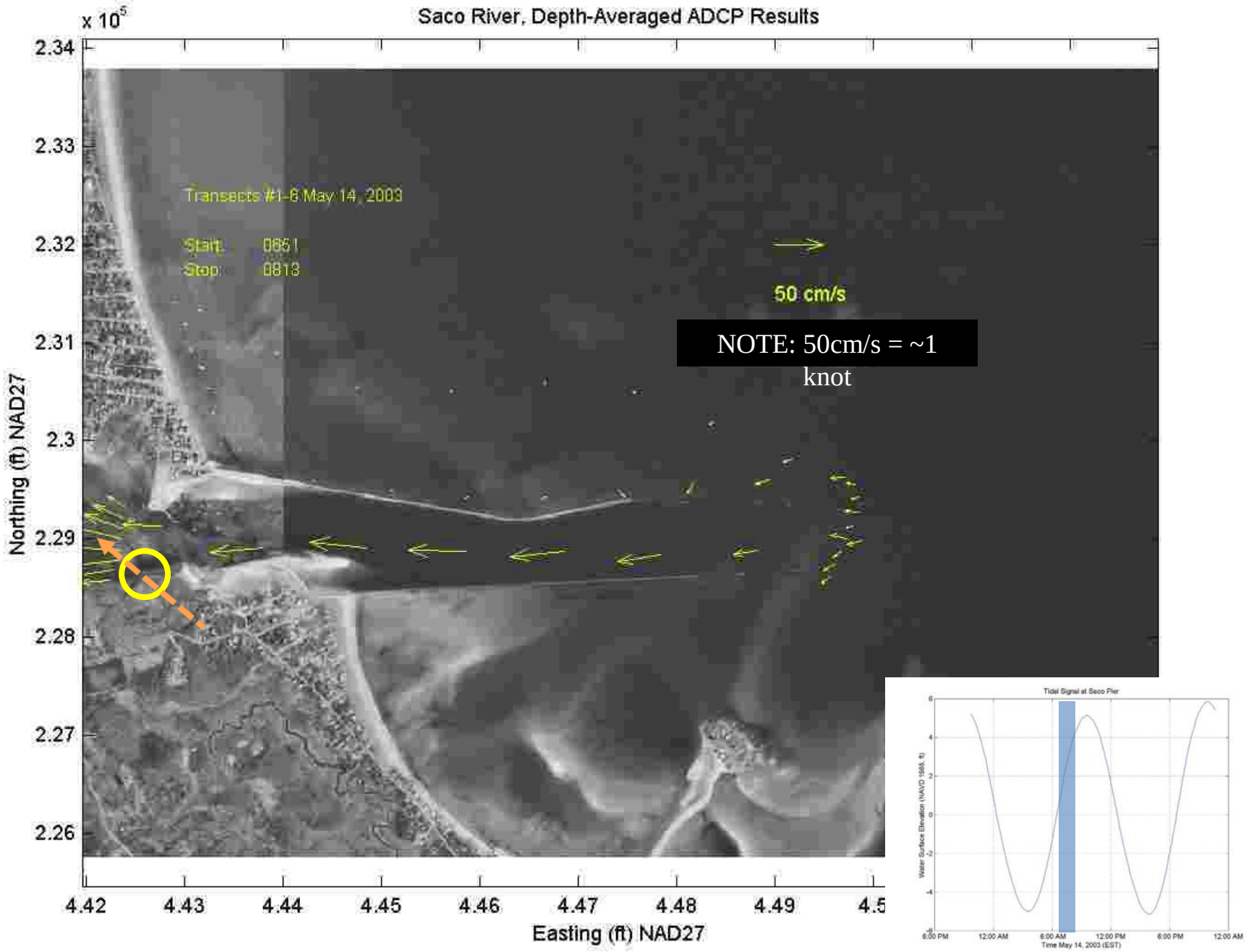
Saco River, Depth-Averaged ADCP Results
x 10^5
2.34
2.33
2.32
2.31
2.3
2.29
2.28
2.27
2.26
Northing (ft) NAD27
Transects #1-8 May 14, 2003
Start 0851
Stop 0813
50 cm/s
NOTE: 50cm/s = ~1 knot
4.42
4.43
4.44
4.45
4.46
4.47
4.48
4.49
4.5
Easting (ft) NAD27
Tidal Signal at Saco Pier
Water Surface Elevation (NAVD 1988, ft)
6
4
2
0
-2
-4
-6
6:00 PM
12:00 AM
6:00 AM
12:00 PM
6:00 PM
12:00 AM
Time May 14, 2003 (EST)

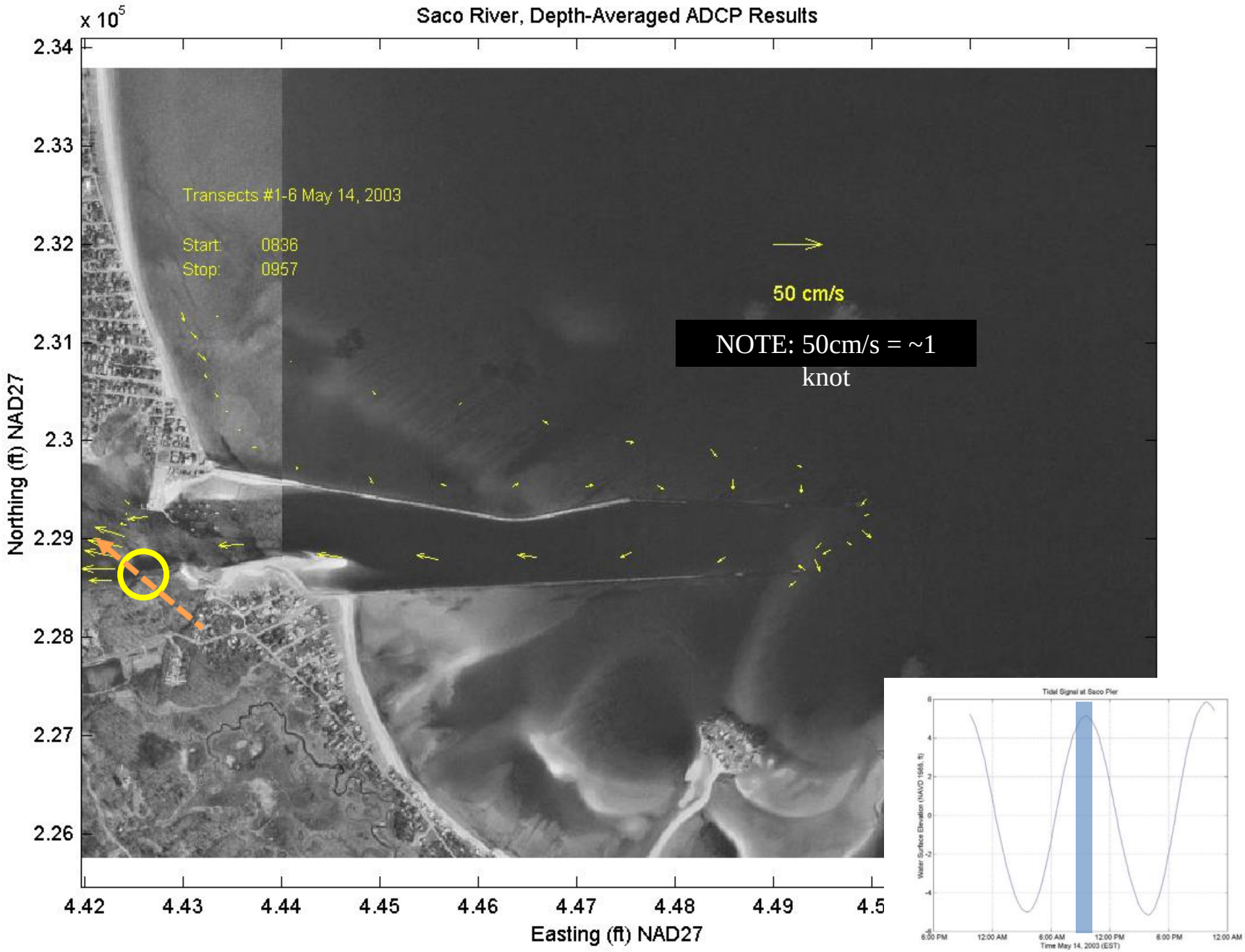
Saco River, Depth-Averaged ADCP Results
x 10^5
Transects #1-6 May 14, 2003
Start: 0836
Stop: 0957
50 cm/s
NOTE: 50cm/s = ~1 knot
Northing (ft) NAD27
Easting (ft) NAD27
2.34
2.33
2.32
2.31
2.3
2.29
2.28
2.27
2.26
4.42
4.43
4.44
4.45
4.46
4.47
4.48
4.49
4.5
Tidal Signal at Saco Pier
Water Surface Elevation (NAVD 1988, ft)
6:00 PM
12:00 AM
6:00 AM
12:00 PM
6:00 PM
12:00 AM
Time May 14, 2003 (EST)

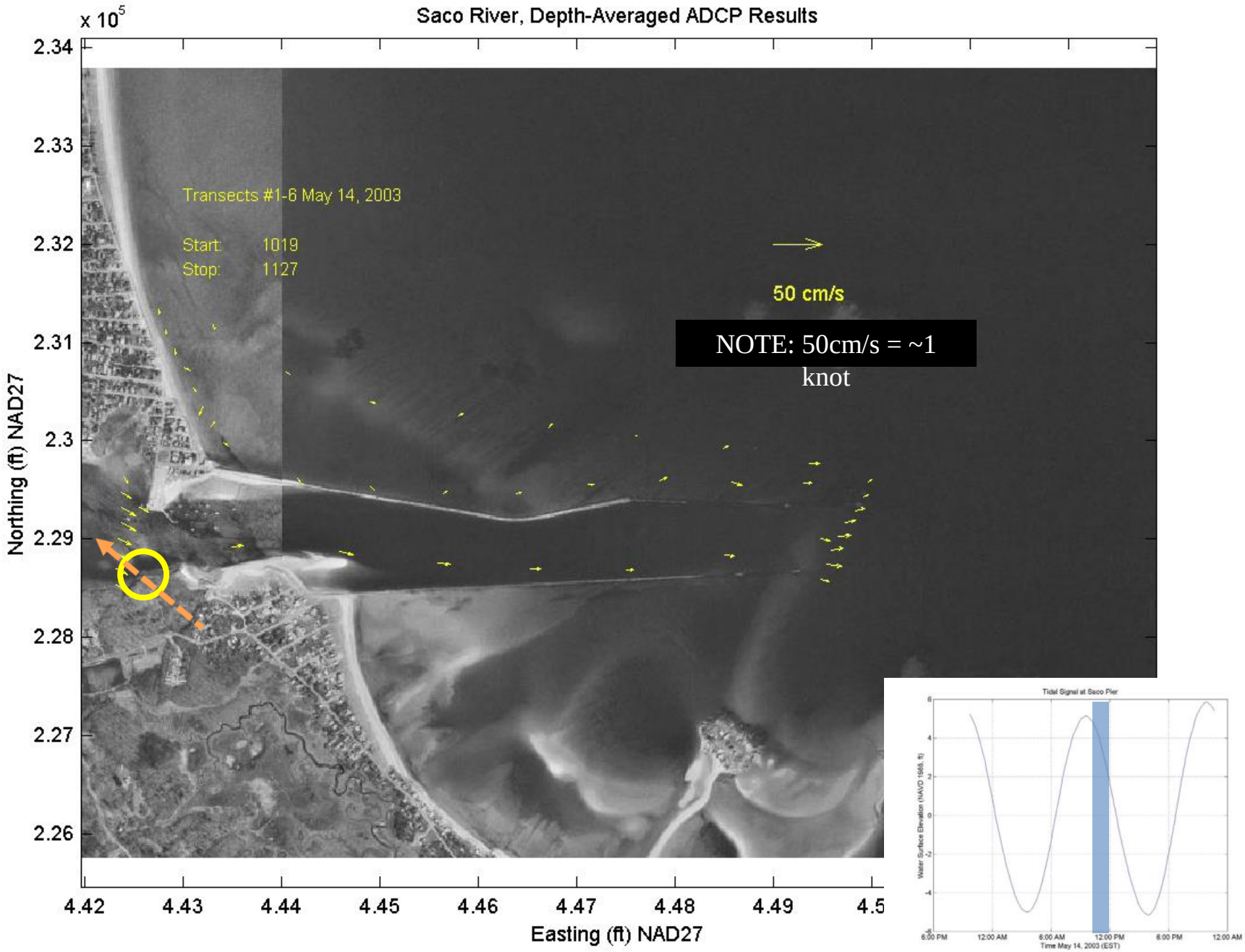
Saco River, Depth-Averaged ADCP Results
x 10^5
Transects #1-6 May 14, 2003
Start: 1019
Stop: 1127
50 cm/s
NOTE: 50cm/s = ~1 knot
Northing (ft) NAD27
Easting (ft) NAD27
2.34
2.33
2.32
2.31
2.3
2.29
2.28
2.27
2.26
4.42
4.43
4.44
4.45
4.46
4.47
4.48
4.49
4.5
Tidal Signal at Saco Pier
Water Surface Elevation (NAVD 1988, ft)
6:00 PM
12:00 AM
6:00 AM
12:00 PM
6:00 PM
12:00 AM
Time May 14, 2003 (EST)

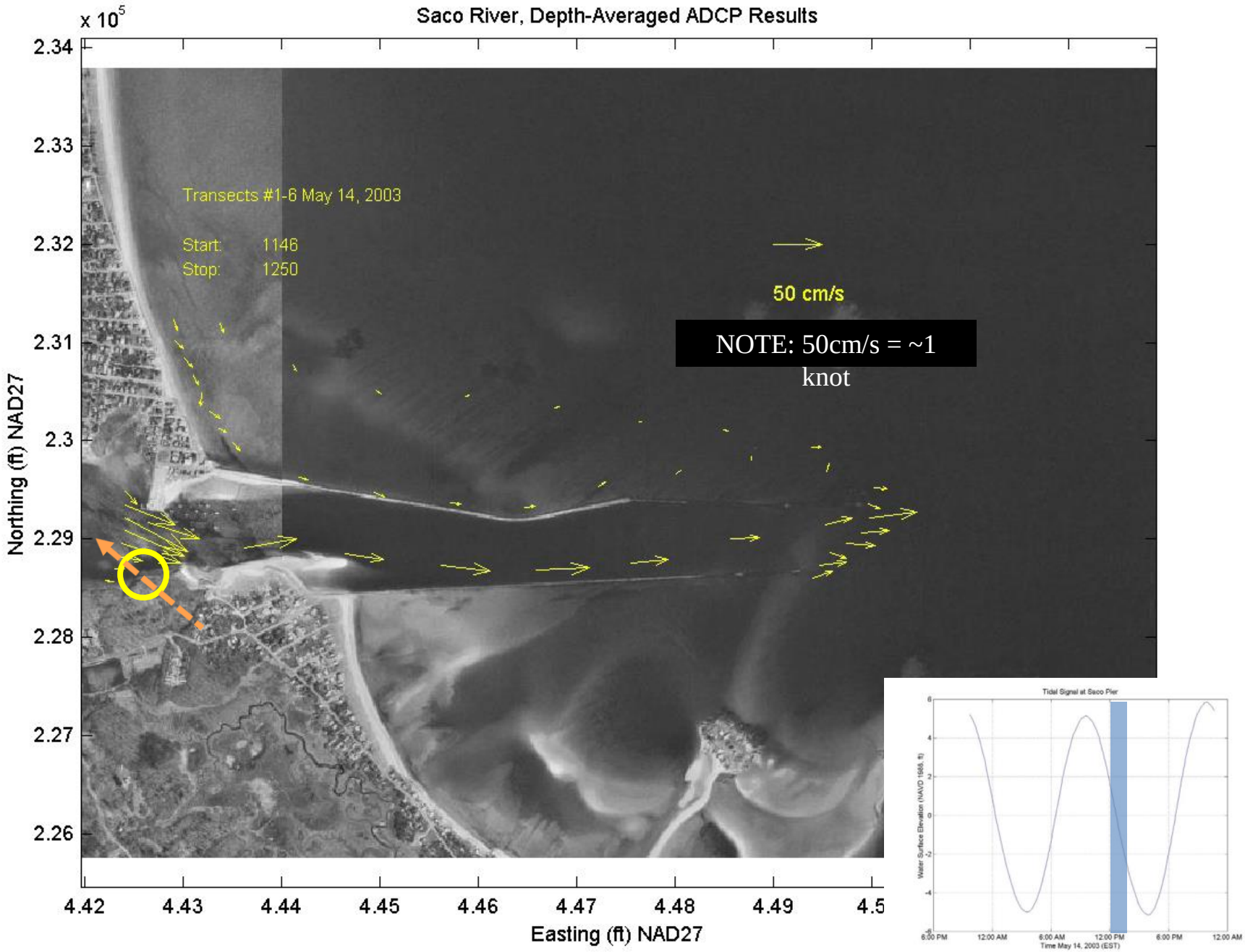
Saco River, Depth-Averaged ADCP Results
x 10^5
2.34
2.33
2.32
2.31
2.3
2.29
2.28
2.27
2.26
Northing (ft) NAD27
Transects #1-6 May 14, 2003
Start: 1146
Stop: 1250
50 cm/s
NOTE: 50cm/s = ~1 knot
4.42
4.43
4.44
4.45
4.46
4.47
4.48
4.49
4.5
Easting (ft) NAD27
Tidal Signal at Saco Pier
Water Surface Elevation (NAVD 1988, ft)
6
4
2
0
-2
-4
-6
6:00 PM
12:00 AM
6:00 AM
12:00 PM
6:00 PM
12:00 AM
Time May 14, 2003 (EST)

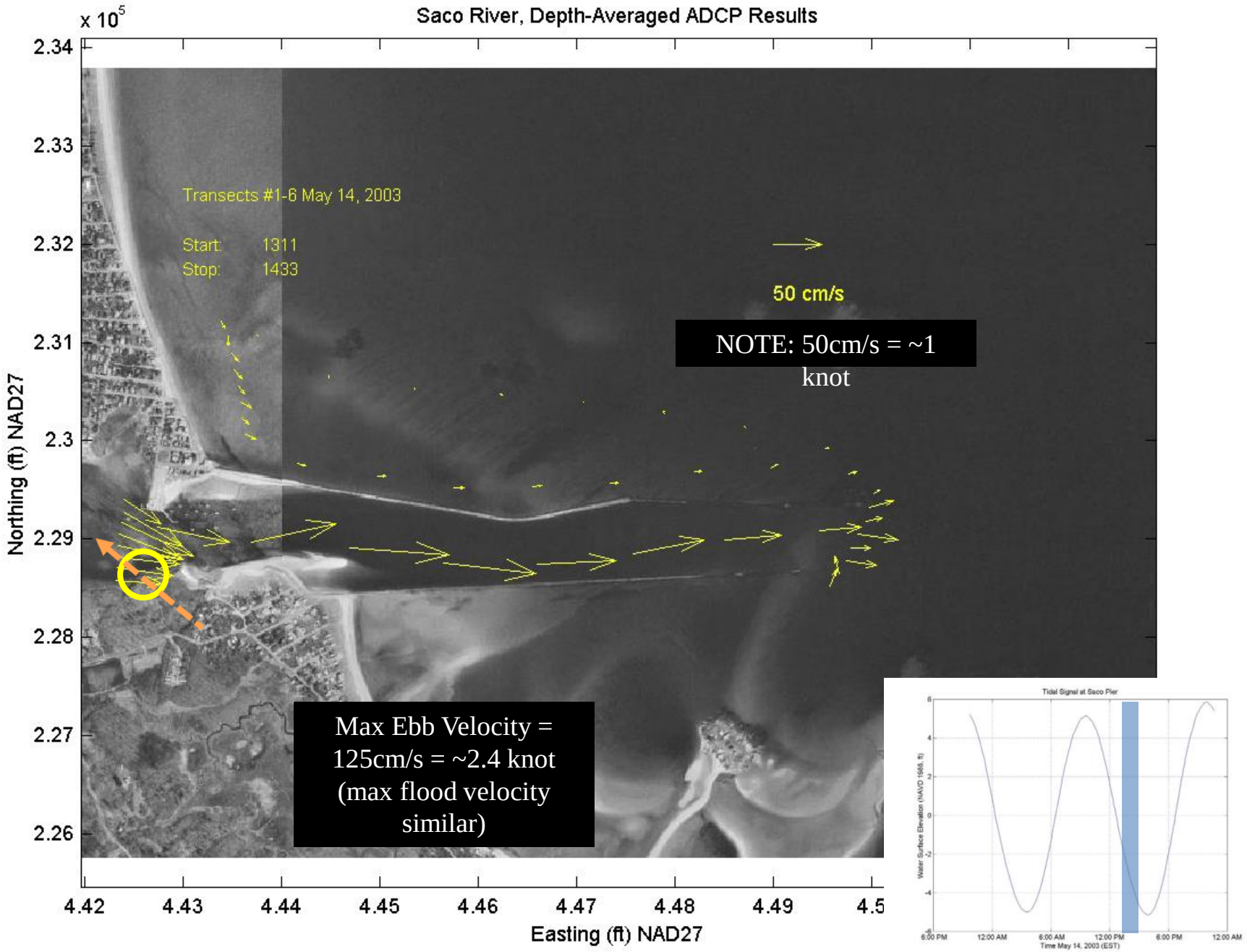
Saco River, Depth-Averaged ADCP Results
x 10^5
Transects #1-6 May 14, 2003
Start: 1311
Stop: 1433
50 cm/s
NOTE: 50cm/s = ~1 knot
Max Ebb Velocity = 125cm/s = ~2.4 knot (max flood velocity similar)
Northing (ft) NAD27
Easting (ft) NAD27
2.34
2.33
2.32
2.31
2.3
2.29
2.28
2.27
2.26
4.42
4.43
4.44
4.45
4.46
4.47
4.48
4.49
4.5
Tidal Signal at Saco Pier
Water Surface Elevation (NAVD 1988, ft)
6:00 PM
12:00 AM
6:00 AM
12:00 PM
6:00 PM
12:00 AM
Time May 14, 2003 (EST)

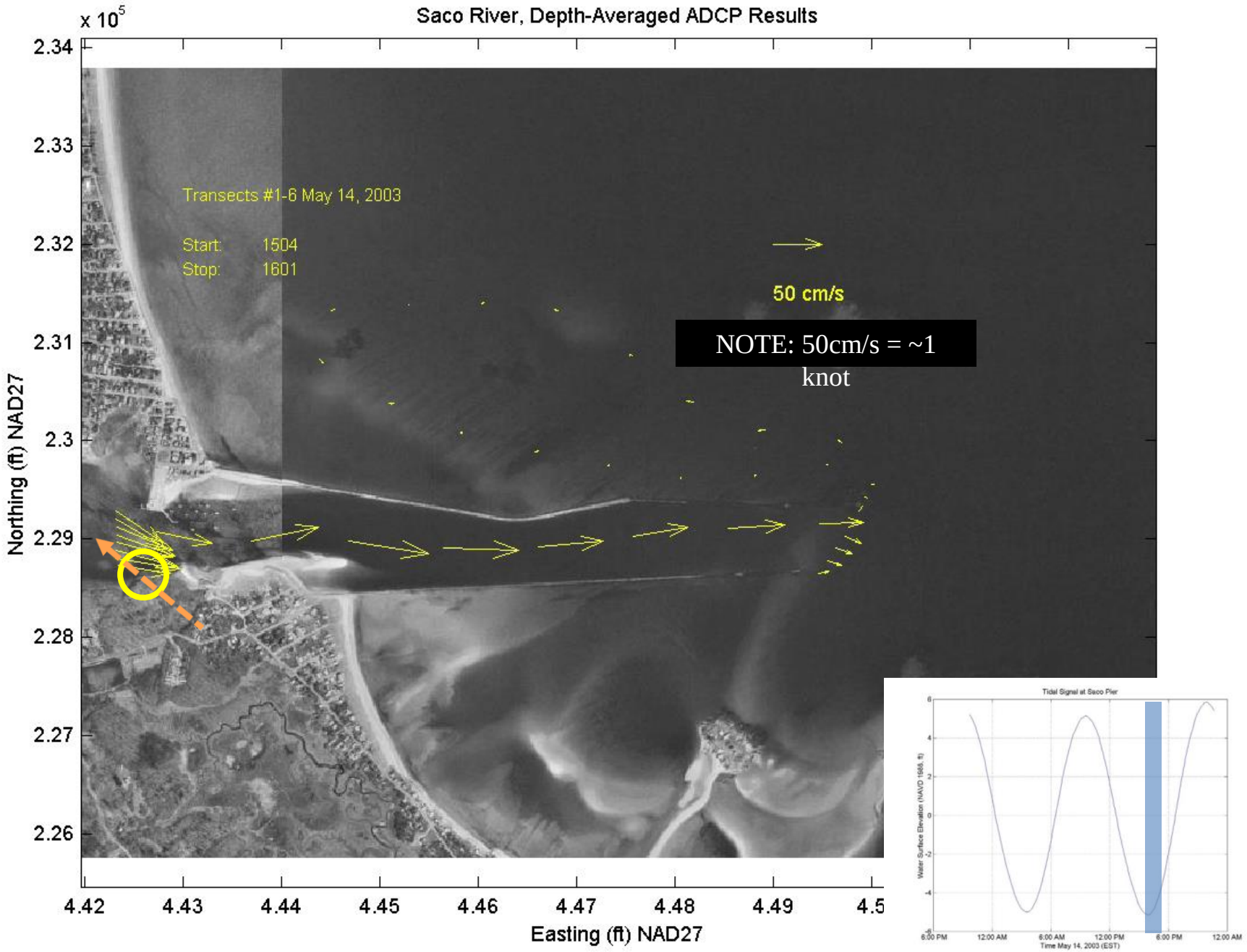
Saco River, Depth-Averaged ADCP Results
x 10^5
Transects #1-6 May 14, 2003
Start: 1504
Stop: 1601
50 cm/s
NOTE: 50cm/s = ~1 knot
Northing (ft) NAD27
Easting (ft) NAD27
2.34
2.33
2.32
2.31
2.3
2.29
2.28
2.27
2.26
4.42
4.43
4.44
4.45
4.46
4.47
4.48
4.49
4.5
Tidal Signal at Saco Pier
Water Surface Elevation (NAVD 1988, ft)
6:00 PM
12:00 AM
6:00 AM
12:00 PM
6:00 PM
12:00 AM
Time May 14, 2003 (EST)

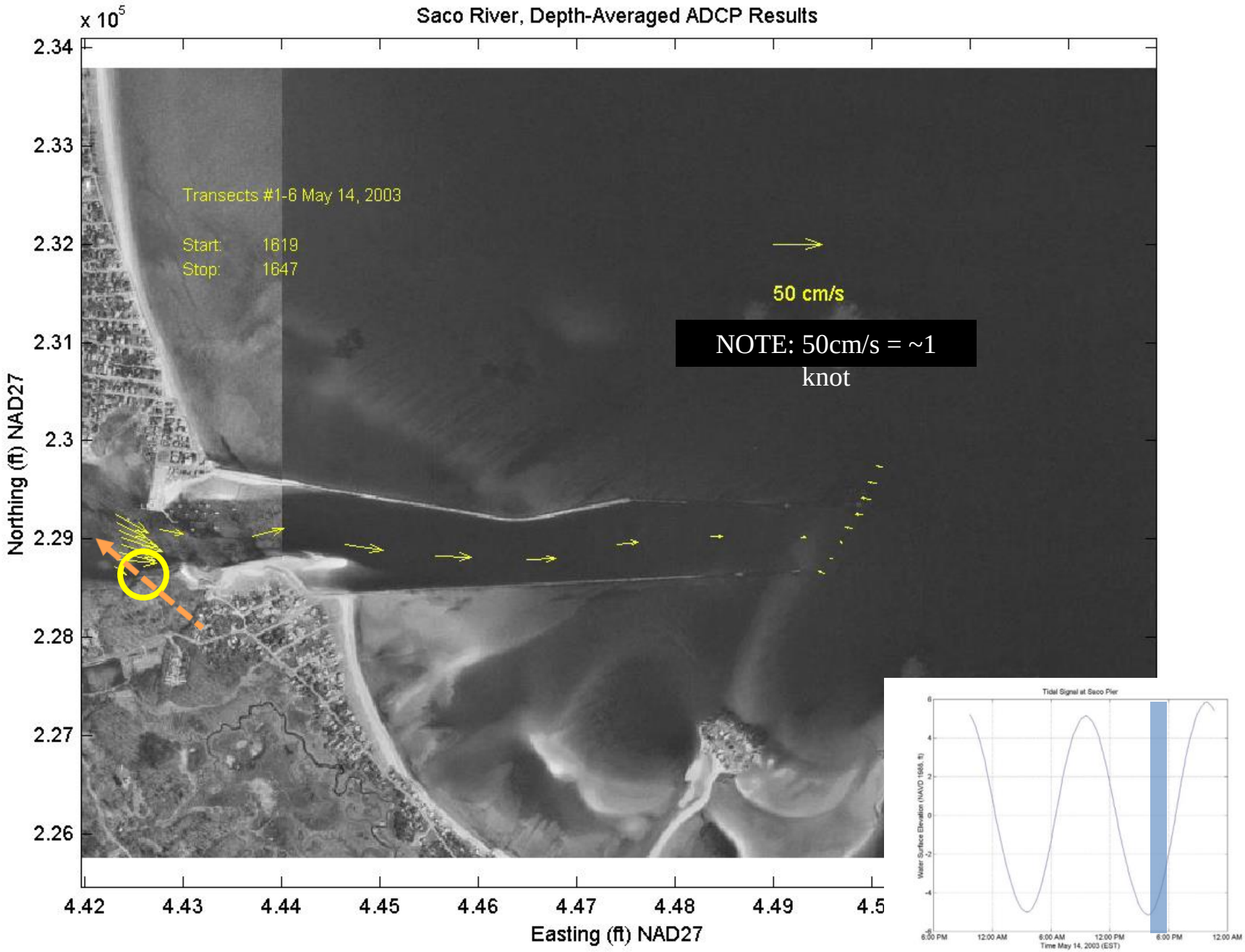
Saco River, Depth-Averaged ADCP Results
x 10^5
Transects #1-6 May 14, 2003
Start: 1619
Stop: 1647
50 cm/s
NOTE: 50cm/s = ~1 knot
Northing (ft) NAD27
Easting (ft) NAD27
2.34
2.33
2.32
2.31
2.3
2.29
2.28
2.27
2.26
4.42
4.43
4.44
4.45
4.46
4.47
4.48
4.49
4.5
Tidal Signal at Saco Pier
Water Surface Elevation (NAVD 1988, ft)
6:00 PM
12:00 AM
6:00 AM
12:00 PM
6:00 PM
12:00 AM
Time May 14, 2003 (EST)

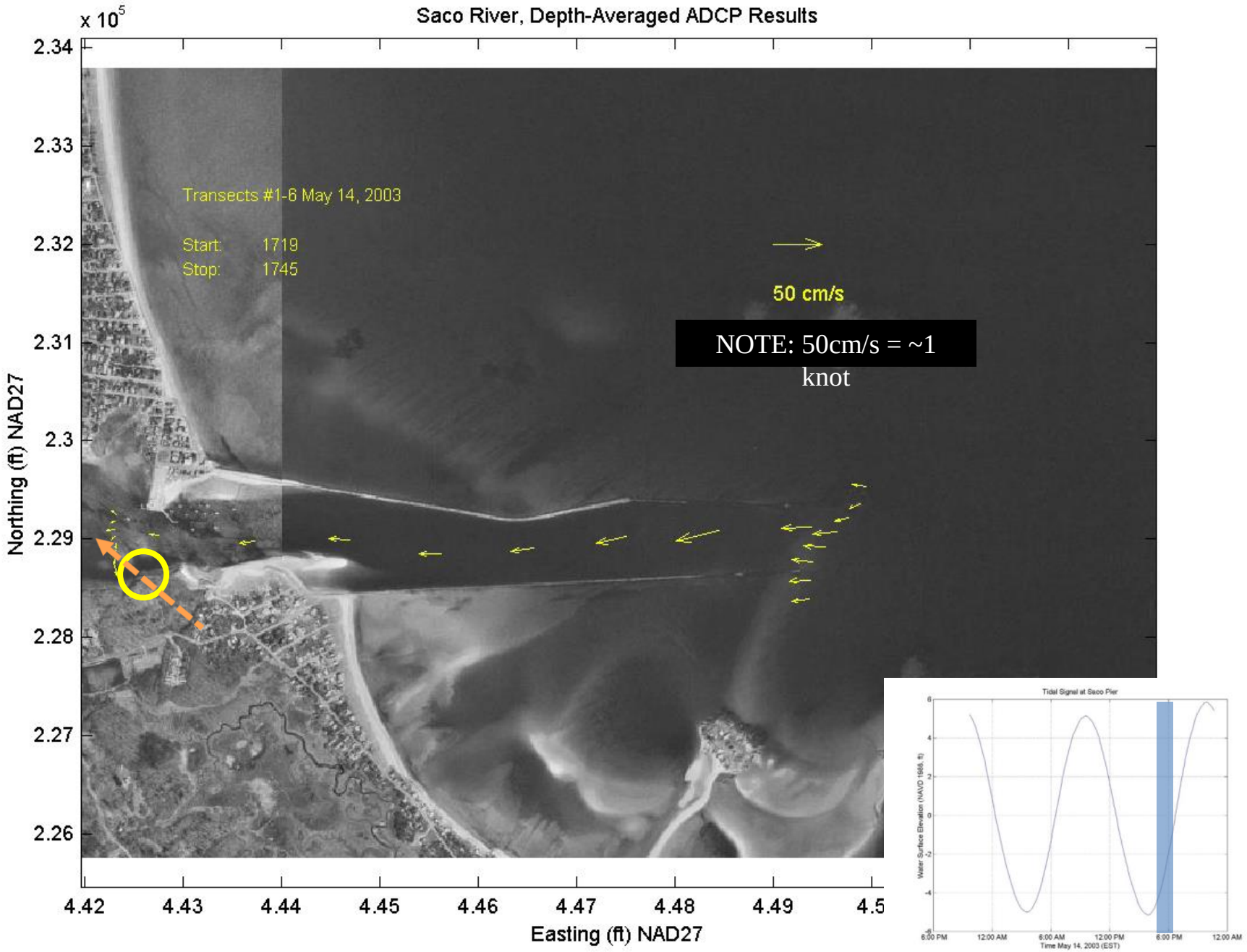
Saco River, Depth-Averaged ADCP Results
x 10^5
Transects #1-6 May 14, 2003
Start: 1719
Stop: 1745
50 cm/s
NOTE: 50cm/s = ~1 knot
Northing (ft) NAD27
Easting (ft) NAD27
2.34
2.33
2.32
2.31
2.3
2.29
2.28
2.27
2.26
4.42
4.43
4.44
4.45
4.46
4.47
4.48
4.49
4.5
Tidal Signal at Saco Pier
Water Surface Elevation (NAVD 1988, ft)
6:00 PM
12:00 AM
6:00 AM
12:00 PM
6:00 PM
12:00 AM
Time May 14, 2003 (EST)

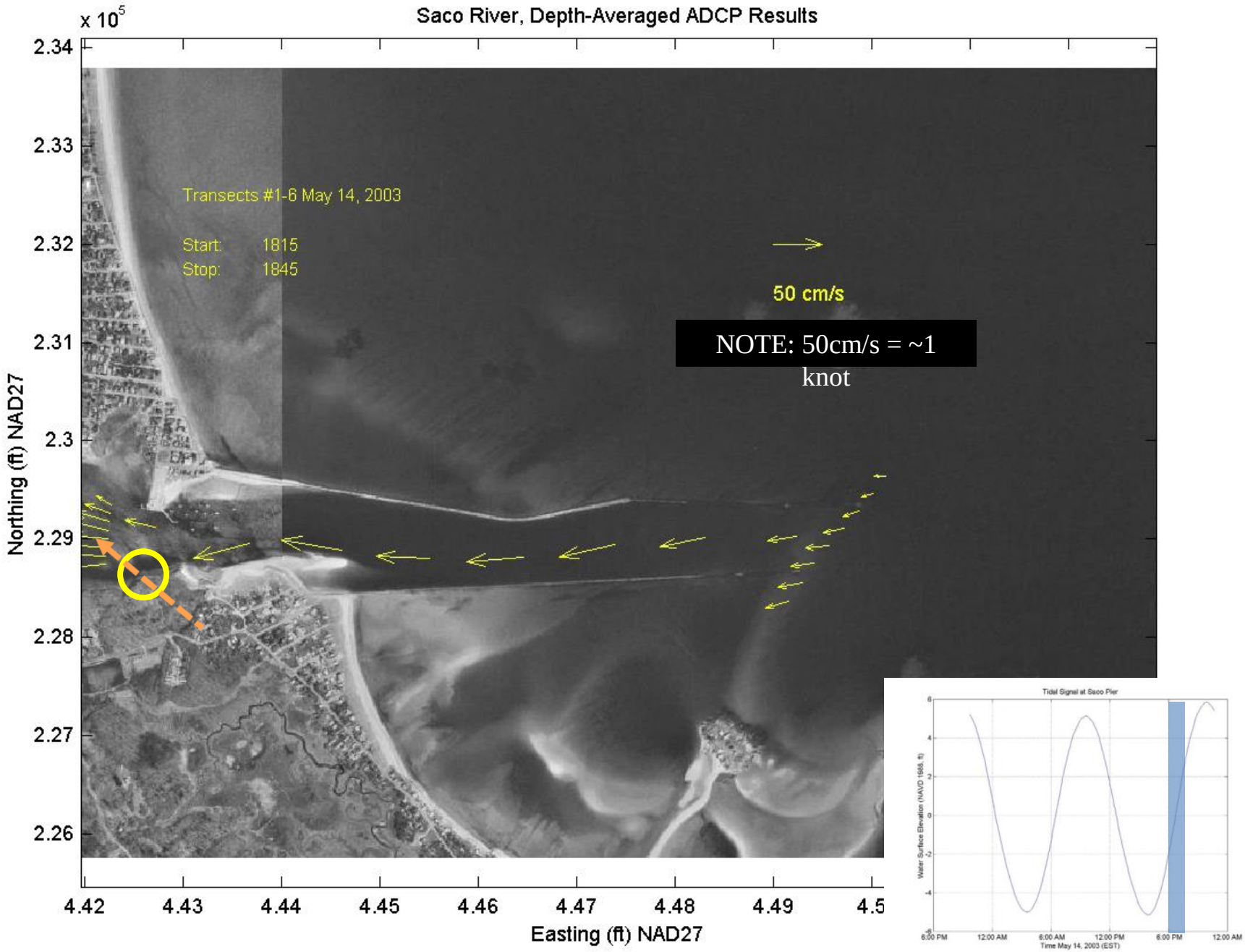
Saco River, Depth-Averaged ADCP Results
x 10^5
2.34
2.33
2.32
2.31
2.3
2.29
2.28
2.27
2.26
Northing (ft) NAD27
4.42
4.43
4.44
4.45
4.46
4.47
4.48
4.49
4.5
Easting (ft) NAD27
Transects #1-6 May 14, 2003
Start: 1815
Stop: 1845
50 cm/s
NOTE: 50cm/s = ~1 knot
Tidal Signal at Saco Pier
Water Surface Elevation (NAVD 1988, ft)
6
4
2
0
-2
-4
-6
6:00 PM
12:00 AM
6:00 AM
12:00 PM
6:00 PM
12:00 AM
Time May 14, 2003 (EST)

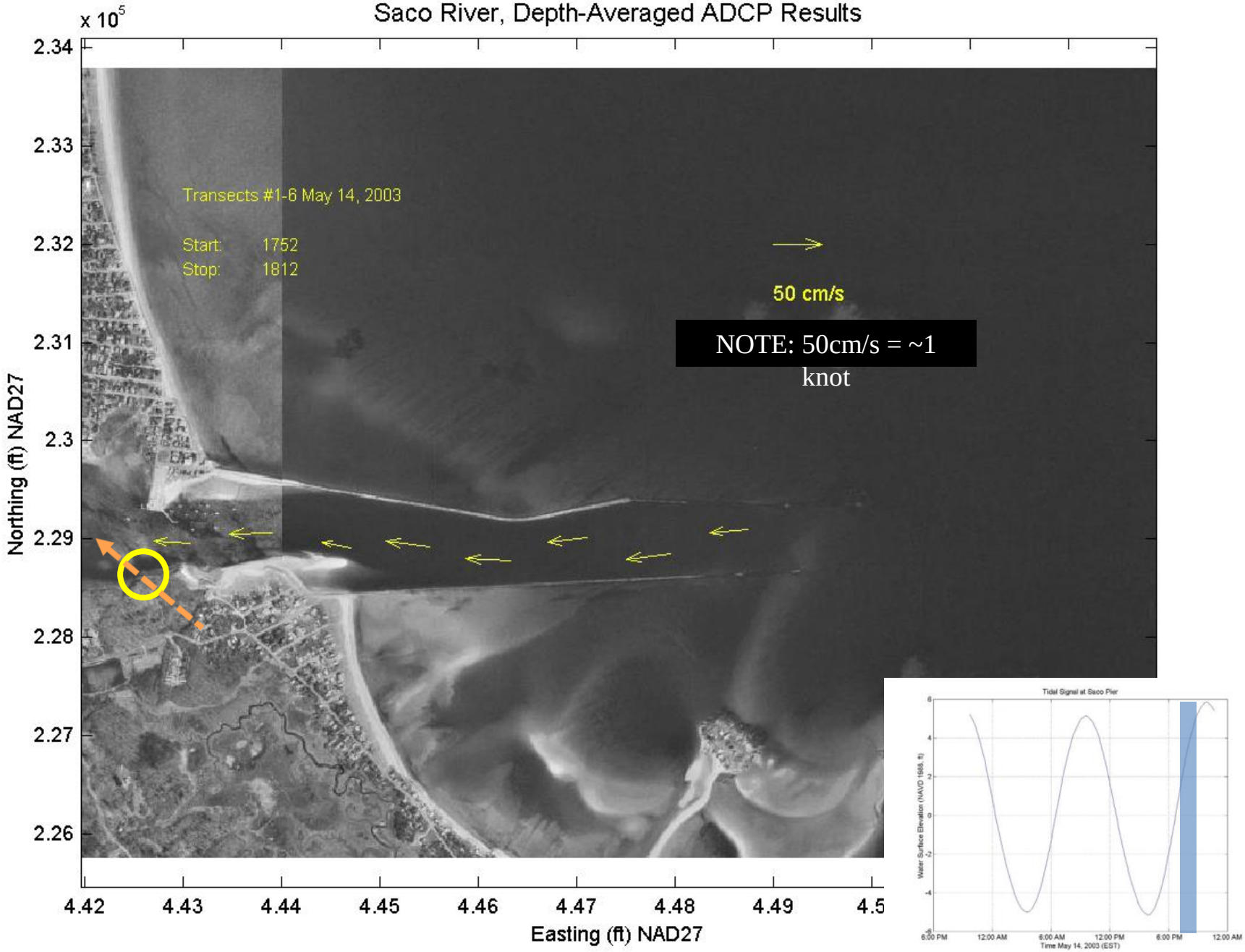
Saco River, Depth-Averaged ADCP Results
x 10^5
2.34
2.33
2.32
2.31
2.3
2.29
2.28
2.27
2.26
Northing (ft) NAD27
Transects #1-6 May 14, 2003
Start: 1752
Stop: 1812
50 cm/s
NOTE: 50cm/s = ~1 knot
4.42
4.43
4.44
4.45
4.46
4.47
4.48
4.49
4.5
Easting (ft) NAD27
Tidal Signal at Saco Pier
Water Surface Elevation (NAVD 1988, ft)
6:00 PM
12:00 AM
6:00 AM
12:00 PM
6:00 PM
12:00 AM
Time May 14, 2003 (EST)

- ***6.5.1 Transect 1***
- The channel geometry along Transect 1 consists of a single, relatively shallow channel. The transect is located just east of the Saco Pier, where a significant reduction in channel width occurs. Maximum depths in the channel at this location are approximately 5m (16.4 ft). The maximum recorded flood velocities were approximately 100-125 cm/s (3.3-4.1 ft/s). The maximum flood currents run in a west to west northwest direction throughout the entire water column. In addition to the westward flow, northward flow occurred on the northern portion of the channel indicating likely eddying around the point on the northern shore. The east/west flow also indicates some eastward flow in the northern extent of the transect, supporting the eddy structure. As the flood tide progressed, the stronger western currents were confined to the southern part of the channel. High tide occurred at 0905 hours and reversal of the flow direction was observed throughout the channel by 1019 hours. The maximum recorded ebb velocities were approximately 100-125 cm/s (3.3-4.1 ft/s) and occurred between 1100 and 1330 hours. These southeasterly ebb currents appear to favor the north side of the channel during the start of the ebb where the strongest currents are confined to the upper 2m of the water column. As the tide progresses, these currents spread to the entire channel area depth and breadth. During the majority of the ebb and flood phases of the tide, the color contour plots show increased turbulence and related eddy formation adjacent to the north shore (between 500 ft [152 m] and the end of transect). The increased turbulence is a result of the protrusion of the northern point (near Saco Harbor) into the channel. This narrowing prevents direct flow into or out of the river channel producing eddies as water tries to enter or exit the reduced-width channel.

Permit Requirements and Timing

- Maine DEP NRPA
- ACOE
- Saco River Corridor Commission
- City of Biddeford
- Harbor Commission
- February 2016 grant funding
- Construction spring 2017

Attachment 1
Formal Site Plan Review Application

City of Biddeford – Planning Department
Planning Board Application
P.O. Box 586, 205 Main Street Biddeford, Maine 04005
207-284-9115

Type of Application:

x Shoreland Zoning Permit | x Site Plan Review (Please include checklist) | __ Extraction
__ Conditional Use Permit | __ Subdivision (Please include Checklist) | __ Private Way
__ Other: _____

Applicant Information:

Name: University of New England
Mailing Address: 11 Hills Beach Road Biddeford, Maine
Telephone: 207-602-2365
Email: aphilippe@une.edu
What is your legal interest in the property?
x Owner __ Potential Buyer with Contract __ Lease/Rental Agreement

Owner's Information:

Name: Applicant
Mailing Address: _____
Telephone: _____
Email: _____

Agent's Information:

Name: Tom Saucier, P.E. Site design Associates
Mailing Address: 23 Whitney Way Topsham, Maine 04086
Telephone: 207-449-4275
Email: tsaucier@sitedesignassociates.biz

Engineer/Surveyor's Information:

Name: Agent
Mailing Address: _____
Telephone: _____
Email: _____

Project Location and Lot Information:

Street Address: 11 Hills Beach Road Drainage Watershed: Tidal portion of Saco River
Tax Map: 52 Lot: 4
Current Zoning: IN Shoreland Zoning: Limited Residential
Size of Lot: 49.9 (x)acres ( )s.f. Lot Frontage: 1,489 ft +\-
Existing Use of Property: University use - Girard Marine Science Center

Property currently serviced by:

x City Road __ Public Sewer x Public Water __ Public Trash
__ Private Road __ Septic System __ Private Well x Private Hauler

Slope Conditions in Area of Construction (if applicable):

__Flat (0-3% slope) __Rolling (3-8% slope) x Hilly (8-15% slope) x Steep (15%+ Slope)

Are there any wetlands or waterbodies on the site? x (Yes)__(No) if yes attach information
Is the project within the 100-year floodplain? __ (Yes) x (No) if yes attach information
Do you plan to bring fill onto the lot? x (Yes) __(No) If yes attach information

Description of proposed use of property:

Project/Proposed Use:

University use - Research Pier

Property to be Serviced by:

x City Road __ Public Sewer x Public Water __ Public Trash

__ Private Road __ Septic System __ Private Well x Private Hauler

Limits of Disturbance: 0.5 (x)acres ( )s.f.

Net change in impervious cover: 0.249 (x)acres ( )s.f.

Is this project part of a larger project? __(Yes) x (No)

Is the project proposing a new Private or Public Road? __(Yes, Private) __(Yes, Public) x (No)

Is this project within the Urbanized Area/MS4 (*see City Drainage Map*) x (Yes) __(No)

Is the project proposing any Stormwater facilities/BMPs? x (Yes) __(No)

Will a Traffic Movement Permit (TMP) be required?: __(Yes) x (No)

x **If in a Shoreland Zone:**

Percent of residential lot coverage (Max 20%): N/A

Percent of structure expansion (Max 30%): N/A

__ **If Subdivision Review, number of lots proposed:** _____

__ **If a Private Way is proposed, number of lots served:** _____

If Site Plan Review, you must provide the following information:

Total new square feet footprint of structure: _____

Total new square feet paving/parking: 10,850 +/-

Waiver Requests (attach details):

1. See cover letter and June 9, 2025 responses to comments
2. _____
3. _____
4. _____
5. _____

Required Submittal Attachments:

A. Letters of Approval

x Fire Department – Contact Chief or Deputy Chief – 282-9986 (Request sent; previously revised plans

__ Ability to Serve for Water Service – Maine Water – 282-1543 in response to BFD comments.)

__ Ability to Serve for Sewer Service – Engineering Department – Tom Milligan 284-9118

__ Police Department – e-911 Road Name Designation – Contact Joanne Fisk 282-5127

__ Ability to Serve for Electrical Service-CMP-1-866-225-4200

x Letter to Planning Board describing project, Waiver requests, proposed improvements, addressing permit requirements, etc.

B. Photographs of Site.

C. Architectural renderings/drawings of proposed buildings, as required.

D. Engineering Plans, as required.

E. Stormwater Management Report, as required.

Fees (Due at time of Submission):

- $75 Nonrefundable Administration Fee is required for every application.
- Refer to "Attachment A Fees and Charges" of the Land Development Regulations for more information. Consult with Planning Staff if you have questions.

Required Signatures:

By signing this application, as the foresaid applicant or authorized agent:

- I certify that I have read and completely understand the application;
- I certify that the information contained in this application and its attachments are true and correct;
- I understand that all information provided on this form and all other documents submitted as part of my proposal is a matter of public record;
- I understand that copies of this information may be supplied upon request to an interested party.
- I understand that additional funds may be required through the course of the review for special studies, legal review costs, and/or engineering review.
- I understand that by submitting an application I am not guaranteed a place on any particular agenda. I further understand that the City Planner will place me on an agenda for review when the application is deemed substantially complete.

Will the proposed project cause 1 acre or more of site disturbance? __(Yes) _x_(No)

- **If Yes, applicant is responsible for any required Maine Construction General Permits and shall comply with the requirements of DEP Chapter 500 Stormwater Regulations, as they apply.**

Signature of Applicant: ___  **_____Date ___06/09/25_____**

Signature of Property Owner: ____ 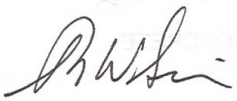 **_____Date ___06/09/25_____**

DIGITAL SUBMITTAL REQUIREMENTS FOR ALL SUBMITTALS:

A) PDF OF SIGNED APPLICATION

B) PDFs OF ALL DRAWING SETS AND OTHER REQUIRED SUBMITTAL ATTACHMENTS NOTED ABOVE

HARD-COPY SUBMITTAL REQUIREMENTS FOR PLANNING BOARD APPLICATIONS:

A) SEVEN (7) FULL-SIZE PAPER COPIES OF DRAWING SETS

DIGITAL SUBMITTAL REQUIREMENTS FOR FINAL APPROVAL:

A) INDIVIDUALLY NAMED PDFs OF EACH DRAWING (NOT A COMBINED PDF SET)

- Individual Drawing PDF Naming Format: 'PROJECT/SHEETSET NAME_INDIVDUAL DRAWING NAME.pdf'

B) PDF COPIES OF ALL PERMIT APPROVALS, APPLICATIONS, REPORTS, NARRATIVES, LETTERS, ETC.

C) FINAL CAD REFERENCE FILES IN DWG FORMAT (SURVEY & PROPOSED DESIGN LINEWORK)

- All drawings & CAD reference files must be to-scale and within the following coordinate systems:

- MAINE STATE PLANE WEST NAD83 (Horizontal Datum) & NAVD88 (Vertical Datum)

HARD-COPY SUBMITTAL REQUIREMENTS FOR FINAL APPROVAL:

A) THREE (3) FULL-SIZE PAPER COPIES OF INDIVIUDAL DRAWINGS REQUIRING BOARD SIGNATURE

B) ONE (1) FULL-SIZE PAPER COPY OF ENTIRE DRAWING SET FOR ENGINEERING RECORDS

PLEASE CONFIRM WITH PLANNING STAFF FOR CLARIFICATION

Attachment 2
Letter of Agent Authorization

UNIVERSITY OF NEW ENGLAND

Biddeford Campus
11 Hills Beach Road
Biddeford, ME 04005
(207) 283-0171 T

Portland Campus
716 Stevens Avenue
Portland, ME 04103
(207) 797-7261 T

May 29, 2023

Mr. Tom Saucier
Site Design Associates
23 Whitney Way
Topsham, Maine 04086

TO WHOM IT MAY CONCERN:

This letter authorizes Tom Saucier, Site Design Associates, to serve as an agent for University of New England for the purpose of permitting the proposed installation of a research pier and float on its Biddeford campus.

Sincerely,

Alan Thibeault
Vice president for University Operations

Attachment 3
Site Plan Checklist

CITY OF BIDDEFORD - SITE PLAN & SUBDIVISION APPLICATION DRAWING CHECKLIST *LAST REVISED: 11/26/2024*

CHECKLIST DIRECTIONS:

1. The following checklist must be completely filled out by the applicant and included on all preliminary and final Site Plan & Subdivision submittals. No checklist is required for sketch submitta
2. Applicant to confirm all of the items listed are included within the submittal Any missing items must have adequate reasoning to justify their absence
3. City to review applicant's submittal and checklist responses. Projects missing substantial submittal information with non-acceptable reasonir will be rejected and required to resubmit
4. Items in **BLACK** are required for 'Preliminary' approval & 'Final' approval
5. Items in **BLUE** are only required for 'Final' approval

SUBMITTAL INFORMATION - TO BE FILLED OUT BY APPLICANT	
Project Name:	University of New England (UNE) Marine Science Center Research Pie
Planning Board # (if available):	2024.34
Applicant Name/Info:	University of New England
Submittal #/Type (Prelim/Final):	Preliminary
Submittal Date:	6/10/2025

SUBMITTAL REQUIREMENT			APPLICANT RESPONSE			CITY REVIEW RESPONSE	
ITEM NUMBER		DESCRIPTION	INFORMATION PROVIDED (YES/NO)	LIST DRAWING SHEET NUMBER WHERE INFORMATION IS PROVIDED	REASON NOT PROVIDED/COMMENT	ACCEPTABLE (YES/NO-REVISE & RESUBMIT)	COMMENT
1		**GENERAL PLAN REQUIREMENTS**	YES				
	A	Drawing specific legends (linetypes, hatches, etc.	YES	C-001, C-002			
	B	Individual drawing layer control should be utilized: freeze/thawing, changing lineweights, and screening (i.e. screen existing layers on a proposed plan, freeze topography and underground utilities on a proposed site plan	YES	ALL			
	C	North arrows, standard engineering scale viewports, scale bars, dated revision block	YES	ALL			
	D	All drawings and surveys must be in the following coordinate systems: NAD83 Maine State Plane West (Horizontal) and NAVD88 (Vertical	YES	ALL			
	E	Drawings need to be designed, signed & sealed by a Maine licensed professional engineer (PE); all boundary survey data needs to be performed by a licensed professional land surveyor (PLS)	YES	ALL			
2		**COVER SHEET**	YES				
	A	Project Name & Property Address	YES	G-001			
	B	Project Team Contact Information (Owner, Engineer, Contractor, etc.)	YES	G-001, G-002	Contractor contact info to be added at a later date		
	C	Site Location Map	YES	G-001			
	D	Sheet Set List of Drawings	YES	G-001			
	E	Tax Map and Lot ID	YES	C-001			
	F	Zoning & Shoreland Zone Information	YES	C-001			
	G	Existing Use Description	YES	C-001			
	H	Proposed Use Description	YES	C-003			
	I	Required Waiver/Variances (Yes/No); if yes, plan must clearly list waivers/variances requesting	YES	G-001			
	J	Name of Drainage Watershed	YES	C-001			
	K	Within the MS4 Urbanized Area (Yes/No)	YES	C-001			
	L	Natural resources (streams, wetlands, etc.) located on-site or adjacent to the property (Yes/No)	YES	C-001			
	M	Within the 100-year Flood Zone (Yes/No)	YES	C-001			
	N	Public Road Proposed (Yes/No)	NO	N/A	There are no public roads onsite		
	O	Private Road Proposed (Yes/No)	YES	C-001			
	P	Public Sewer Connection (Yes/No)	YES	C-001	There are no proposed improvements to the public sewer		
	Q	Public Storm Drain Connection (Yes/No)	NO	N/A	There are no public storm drains onsite		
	R	Limits of Disturbance in square feet and acres	YES	C-005			
	S	Pervious Land Cover square footage, existing and propose	YES	C-003			
	T	Impervious Land Cover square footage (Pavement/Gravel), existing and propose	YES	C-003			
	U	Building Roof square footage, existing and propose	YES	C-001			
	V	Assigned Planning Board Numbe	YES	G-001			
	W	Estimated cut/fill earthwork volumes. If disturbing within the Flood Zone, a separate set of earthwork volumes required (overall site vs. within flood zone	YES	C-007, C-007			
3		**EXISTING CONDITIONS PLAN**					
	A	Horizontal & Vertical Datums annotated (NAD83 & NAVD88)	YES	C-001			
	B	Property & Right-of-Way Lines	YES	C-001			
	C	Boundary line information (bearings, distances, etc.	YES	C-001			
	D	Property pin and monumentation locations	YES	C-001			
	E	Existing easements with proper ownership identifie	YES	C-001			
	F	Road Names & Individual Lot Labels (Map, Lot, Owner, Acreage	YES	C-001			
	G	Location of any Natural Resources and their respective buffers (wetlands, streams, etc	YES	C-001			
	H	100-year Flood Zone Limits & Elevation	YES	C-001			
	I	Existing contours with adequate contour labelling; minimum 1' contour interva	YES	C-001			
	J	Existing building FFEs annotate	YES	C-001			
	K	Spot elevations for all tie-in locations (curb cuts, property line	YES	C-001			
	L	Existing buildings & structure	YES	C-001			
	M	Existing pavement areas & number of parking space	YES	C-001			
	N	Existing ADA ramp geometry, detectable warning plates, and ADA parking space	YES	C-001			
	O	Existing site features (sidewalks, retaining walls, curbing, lightpoles, guide rails, dumpsters, fencing)	YES	C-001			
	P	Existing signage and striping	YES	C-001			
	Q	Existing underground utility locations (storm, sewer, force main, water, gas, elec, tel	YES	C-001			
	R	Existing above-ground utility locations (manholes, catch basins, utility poles, hydrants, transformers, riprap)	YES	C-001			
	S	Rim, invert in, invert out, pipe size, cardinal direction (N, E, S, W) information for any existing utility infrastructure being tied into (upstream/downstream/outfalls	YES	C-001			
	T	Existing tree lines, street trees, free-standing trees (12" or larger diameter at breast height), and vegetation	YES	C-001			
	U	Location of any borings, drinking wells, and monitoring well	YES	C-001			
4		**SITE DEMOLITION & EROSION CONTROL (E&SC) PLAN**					
	A	Limits-of-disturbance outlined and acreage annotate	YES	C-005			
	B	Location of any Natural Resources and their respective buffers (wetlands, streams, etc	YES	C-001			
	C	100-year Flood Zone Limits	YES	C-001			
	D	Callout existing site features to be demolished/removed/replace	YES	C-002			
	E	Callout existing utilities to be demolished/removed/abandoned-in-plac	YES	C-002			
	F	Hatch existing buildings and pavement to be remove	YES	C-002			
	G	Construction Entrance location(s)	YES	C-005			
	H	Perimeter E&SC control location(s) (i.e. silt fence, erosion berm mix	YES	C-005			
	I	Stockpile and staging area(s) identified (with proper perimeter contro	YES	C-005			
	J	Inlet protection location(s)	YES	C-005			
	K	Note requiring contractor to implement dust control measures throughout constructio	YES	C-012			
	L	Note requiring contractor to pave utility trenches within right-of-way within 3 days of excavation or prior to any rain event	N/A	N/A	No utilties proposed within right-of-way		
	M	If groundwater expected, show dewatering/silt bag location(s); show temporary pumping routing	YES	C-014			

	N	If large development is proposed with an extensive underground stormwater conveyance network, identify how SWM infrastructure and BMPs will be protected during construction and if sediment traps/basins are needed	N/A		No extensive underground SWM infrastructure is proposed.		
5		**SITE PLAN/SUBDIVISION PLAN**	YES				
	A	Partial Site Plans needed for any viewport scale greater than 1"=20	YES	C-003			
	B	Existing property and right-of-way lines	YES	C-003			
	C	Proposed subdivision lot lines and labels	YES	C-003			
	D	Required Zoning Setbacks shown with dimensions and annotation	YES	C-003			
	E	Bulk requirement summary table (zoning/parking calculations	YES	C-003			
	F	Location of any Natural Resources and their respective buffers (wetlands, streams, etc.	YES	C-003			
	G	100-year Flood Zone Limits	YES	C-003			
	H	Proposed building outlines, door entrances and loading docks	YES	C-003			
	I	Proposed building labels	YES	C-003			
	J	Proposed road & sidewalk extents; provide clear annotation if roads will be public or private	YES	C-003			
	K	Proposed parking and accessible parking locations; annotate parking space count	YES	C-003			
	L	Proposed signage, parking striping, and traffic striping	YES	C-003			
	M	Detailed ADA ramp geometry, detectable warning surfaces, and ADA parking striping/signage; existing & proposed	NO		No ADA ramps or parking are proposed		
	N	Proposed site features (i.e. curbing, walls, fencing, guiderail, fire hydrant, transformers, light pole locations)	YES	C-003, C-004, C-006, C-007			
	O	Proposed landscaping; detailed landscaping design should be shown on separate plan	YES	C-015, C-016			
	P	Designated snow storage areas	NO		No snow storage areas are proposed		
	Q	Proposed dumpster locations and trash removal access	NO		No dumpsters or trash removal are proposed.		
	R	Linear dimensions of all drive aisles, sidewalk widths, parking spaces, loading dock	YES	C-003, C-006, C-007			
	S	Radial dimensions for all curbs, landscaped islands, sidewalk	YES	C-003			
	T	Public/private road centerline stationing shown, labelled every 0+50' with curve dat	YES	C-003, C-006, C-007			
	U	If Private Road is proposed, final recorded plans must clearly note that proposed private roads will not be submitted in the future for public acceptanc	NO		Will be provided at a later date		
	V	If Private Road is proposed, final recorded plans must clearly note that the City is not responsible for any maintenance, repair, plowing, or trash removal of proposed private roads	NO		Will be provided at a later date		
	W	Planning Board signature block for final recording	YES	G-001			
6		**GRADING PLAN**	YES				
	A	Partial Grading Plans needed for any viewport greater than 1"=20	YES	C-004, C-006, C-007			
	B	Limits-of-disturbance outlined and acreage annotated	YES	C-004, C-006, C-007			
	C	Proposed Building Labels with Individual Finished Floor Elevations (FFEs	YES	C-004, C-006, C-007			
	D	Existing contours with adequate contour labelling, screened; minimum 1' contour interva	YES	C-004, C-006, C-007			
	E	Proposed contours with adequate contour labelling; minimum 1' contour interva	YES	C-004, C-006, C-007			
	F	Detailed grading for all ditches, swales, outfalls, and ripra	YES	C-004, C-006, C-007			
	G	All proposed contours tie-into existing contours at limits-of-disturbance outlin	YES	C-004, C-006, C-007			
	H	Existing spot elevations for all asphalt, curb, and SWM BMP tie-in location	YES	C-004, C-006, C-007			
	I	Location of any Natural Resources and their respective buffers (wetlands, streams, etc.	YES	C-004, C-006, C-007			
	J	100-year Flood Zone Limits	YES	C-004, C-006, C-007			
	K	Proposed spot elevations for all important roadway geometric points (including but not limited to: parking/drive aisles, building corners/entrances, retaining walls, loading docks, EOP/curblines)	YES	C-004, C-006, C-007			
	L	Proposed spot elevations for all ADA ramp/landing/parking stall geometry point	N/A	No new ADA proposed			
	M	Proposed % slope arrows for all ADA parking spaces and sidewalk	N/A	No new parking proposed			
	N	Proposed longitudinal % slope arrows for drainage ditch centerline	YES	C-004, C-006, C-007			
	O	Proposed % slope arrows for roads, parking areas, and landscape tie-in area	YES	C-004, C-006, C-007			
	P	Estimated cut/fill earthwork volumes. If disturbing within the Flood Zone, a separate set of earthwork volumes required (overall site vs. within flood zone	YES	C-004, C-006, C-007			
7		**ROAD PROFILES (if public/private road proposed)**	YES				
	A	Existing surface; dashed and screened	YES	C-006, C-007			
	B	Proposed surface; continuous and bold	YES	C-006, C-007			
	C	Road design speed must be clearly identified	YES	C-006, C-007			
	D	Corresponding centerline stationing and curve data annotation	YES	C-006, C-007			
	E	All vertical curves must identify the proposed 'K' values and confirm they meet the minimum design speed thresholds listed in AASHTO's Green Book Tables 3-35 & 3-3	YES	C-006, C-007			
	F	Clear annotation if proposed road will be public or private	YES	C-006, C-007			
	G	If Private Road is proposed, plans must clearly note that proposed private roads will not be submitted in the future for public acceptanc	YES	C-003			
	H	If Private Road is proposed, plans must clearly note that the City is not responsible for any maintenance, repair, plowing, or trash removal of proposed private road	YES	C-003			
8		**UTILITY PLAN**					
	A	Existing underground utility locations; screened (storm, sewer, force main, water, gas, electric, telecom)	YES	C-004			
	B	Existing above-ground utility locations; screened (manholes, catch basins, utility poles, hydrants, riprap)	YES	C-004			
	C	Rim, invert in, invert out, pipe size, cardinal direction (N, E, S, W) information for any existing utility infrastructure being tied into (upstream/downstream/outfalls	YES	C-004			
	D	Proposed underground utility locations; bold (storm, sewer, force main, watergas, electric, telecom, lighting)	YES	C-004, ES1.1			
	E	Proposed above-ground utility locations; bold (manholes, catch basins, utility poles, hydrants, transformers, riprap)	YES	C-004			
	F	Proposed storm culverts, outfalls, and riprap locations and size	YES	C-004 to C-007			
	G	Storm/sewer structure labels must include: rim, inverts in, inverts out, pipe sizes, cardinal directions (N, E, S, W)	YES	C-004 to C-007			
	H	Storm/sewer pipe labels must include: linear footage, pipe size, material, slop	YES	C-004 to C-007	Additional information can be found in the SWM Report		
	I	Flow directional arrows for storm & sewer pipes	YES	C-004 to C-007			
	J	Proposed & existing site features shown that could conflict with proposed utilities (trees, signs, lightpoles, bollards, foundations, guiderails	YES	C-004 to C-007			
	K	All storm drains must be sized to convey the 25-year storm	YES	C-004 to C-007	See SWM Report		
	L	Sewer force main sizes and invert elevations	NO	N/A	No force main proposed		
	M	Sewer pump station locations, model, rim, inverts, pipe sizes, cardinal directions (N,E,S,W); additional details and hydraulic calculations required for any Public pump station proposed.	NO	N/A	No pump stations proposed		
	N	Locations, sizes, and elevations of any: grease traps, oil-water separators, septic systems, drinking wells	NO	N/A	None proposed		
	O	Proposed water sizes labelled	NO	N/A	None Proposed		
9		**UTILITY PROFILES**					
	A	Utility profiles required for**all** gravity storm drain and sewer pipes proposed: within the right-of-way, within private or public roads, for non-driveway culverts, and for any public infrastructure tie-ins	NO	N/A	No utilties proposed in ROW		

B	Existing surface; dashed and screened	NO	N/A	No utilties proposed in ROW		
C	Proposed surface; continuous and bold	NO	N/A	No utilties proposed in ROW		
D	Storm/sewer structure labels must include: rim, inverts in, inverts out, pipe sizes, cardinal directions (N, E, S, W)	NO	N/A	No utilties proposed in ROW		
E	Storm/sewer pipe labels must include: linear footage, pipe size, material, slop	NO	N/A	No utilties proposed in ROW		
F	Existing and proposed gravity pipe crossings shown; sizes labelled and depths/clearance annotated	NO	N/A	No pipe crossing proposed		
G	Existing and proposed electric/water/telecom/gas crossings shown at approximate depths; sizes labelled and depths/clearance annotatec	YES	ES1.1			
10	**DETAILS**					
A	Road section detail, including pavement/gravel depths & cross slope	YES	C-008, C-009, C-010			
B	Sidewalk, paver, crosswalk, and any other pavement section detail:	N/A	None proposed			
C	Pavement sawcut & shiplap details	YES	C-003, C-006, C-007			
D	Utility trench/backfill detai	YES	C-011			
E	All site feature details; curbing, retaining walls, fencing, guiderails, dumpsters, et	YES	C-011, C-013, C-014			
F	Signage, striping, and ADA details	N/A	N/A	No signage or striping proposec		
G	E&S notes and details	YES	C-012, C-013, C-014			
H	Utility structure details (manholes, cleanouts, fittings, handholes, transformer pads, hydrants)	YES	C-013, C-014			
I	Storm outfall & riprap details	YES	C-011			
J	Drainage ditch cross section identifying minimum depth, minimum bed width, and maximum side slopes	NO	C-013, C-014			
K	Pump station, grease trap, oil-water separator, septic, drinking well detail	N/A	N/A	None Proposed		
L	Conduit section details	N/A	N/A	None Proposed		
11	**LANDSCAPING, LIGHTING & PHOTOMETRIC PLANS**					
A	As required by ordinance; at a minimum: locations, counts, lighting models, and landscaping species must be identifiec	YES	C-015, C-016, ES1.1			
B	Landscaping & lighting details	YES	C-015, C-016, ES1.1			
12	**DOCUMENTS/REPORTS/CALCULATIONS**					
A	On initial preliminary submittal applications, applicant must submit a development review and inspection fee. Applicant to coordinate fee amount with City Planner prior to submittal. This fee will be drawn against to cover the following type of services throughout the project life cycle (and may require replenishing): i. 3rd Party City Peer-Review ii. Site Inspections during the permitting process iii. Erosion & Sediment Control Inspections during construction iv. Right-of-Way Inspections during construction	Yes				
B	Stormwater Management Report, including: 1. Predevelopment & Post-development Drainage Area Maps, including: a. Subdrainage areas delineated and labeled b. Points of Interest/Analysis shown and labeled c. Hatching for different land cover areas (impervious, pervious, gravel) within each applicable USDA soil boundary d. Time of concentration (Tc) paths & durations e. Four City-standardized stormwater summary tables 2. If any SWM water quality BMP or detention facility is proposed, hydrologic model exports/hydrographs must be submitted for the for the 2, 10, 25, & 100-year storm frequencies 3. Sizing calculations for any SWM water quality BMP or detention facility 4. A stormwater maintenance manual for any proposed SWM water quality BMP or detention facility, including: a. Annual maintenance requirements b. Annual inspection requirements by a licensed PE; noting that all inspection reports/logs need to be submitted to the Engineering Department by March 1st each following year, identifying what on-going maintenance has occurred and what remedial repairs are needed c. Signed Property Owner Agreement: including the current property owner's contact information and signature; it must be noted that all stormwater BMP maintenance requirements are linked to the property for perpetuity and transfer to any new ownership	Yes				
C	An approved 'Sewer Ability-to-Serve Letter' from the Engineering Department: i. Applicant to submit proposed sewer flow calculations per Maine's Subsurface Wastewater Disposal Rules, Chapter 241, Section 4 (Tables 4A & 4C	N/A		No new buildings/sewer conveyance proposed		
D	A Performance Guarantee Cost Estimate utilizing Planning's templat	YES				
E	For any Site Location of Development (SLODA) project, the applicant's submittal must mimic a formal submittal to DEP. Submit must abide to DEP's SLODA application and include DEP's SLODA Submittal Checklist (Form D)	YES				
F	25-year hydraulic calculations for all storm conveyance infrastructure (pipes, culverts, drainage ditches); starting tailwater conditions/documentation must be clearly identifie	YES				
K	Public sewer pump station sizing calculations and maintenance plai	N/A	No pump stations proposed	No pump stations proposed		
M	Grease trap sizing calculations	N/A	No grease traps proposed	No grease traps proposed		
N	Homeowner Association (HOA) agreement for any private road serving two (2) lots or more	N/A	No HOA	No HOA		
O	Summary list & copy of any required DOT/DEP/USACE permits & approvals	YES				

Attachment 4
Location Map

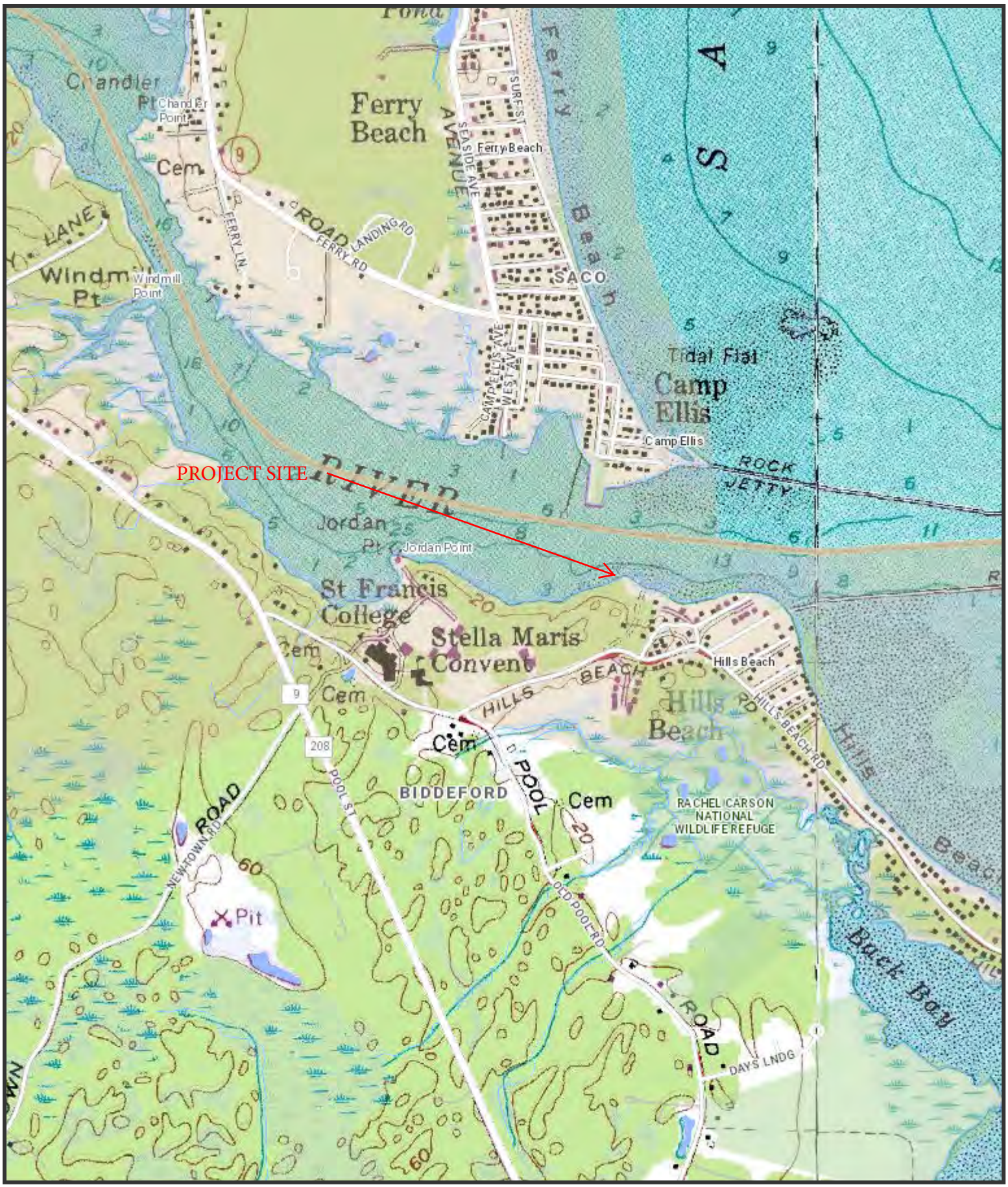

The Maine Department of Transportation provides this publication for information only. Reliance upon this information is at user risk. It is subject to revision and may be incomplete depending upon changing conditions. The Department assumes no liability if injuries or damages result from this information. This map is not intended to support emergency dispatch.

0.25 Miles

1 inch = 0.28 miles

Date: 6/8/2023
Time: 3:54:08 PM

Attachment 5
Deed

Excepting and reserving, however, from the last parcel described a small triangular parcel of land in the rear of the premises of Charles E. Roberts which triangular lot has a base of about 50 feet in length which is an extension of the northwesterly boundary of said Roberts lot; and has an altitude of about 100 feet in length which is the northeasterly side thereof and is located in the center of a ditch long supposed to be the rear line of the Roberts lot; and which has a hypotenuse which is coincident with the rear line of said Roberts lot and is the southerly side of said triangule, being the same premises conveyed by Blanche T. Beuscher and Olga M. DeHaven to the said Kenneth A. Littlefield and Barbara A. Littlefield, by their deed of mortgage dated on the twentieth (20) day of February 1958 and recorded in York Registry of Deeds, Book 1354, Page 447, but described under the aforementioned reference only as three certain lots or parcels of land, with buildings thereon, and mentioned as being the same premises conveyed on February 20th, 1958, by Kenneth A. and Barbara A. Littlefield to Blance T. Beuscher and Olga M. DeHaven, by Warranty Deed, Recorded Book 1362, Page 112; and that such entry was made and possession taken as aforesaid, for the avowed purpose of foreclosing said mortgage, because of a breach of the condition thereof.

Raymond E. Mealey

Madeline C. Mealey

STATE OF MAINE

COUNTY OF YORK, SS March 24, 1962 Signed and sworn to by the said Raymond E. Mealey and Madeline C. Mealey,

Before me. Maurice L. Shibles Notary Public (L.S.)
My Commission Expires Sept. 2, 1966

Recorded according to the original received April 6, 1962 at 11h. 58m. A. M. EL

KNOW ALL MEN BY THESE PRESENTS, THAT, COUVENT de la PRESENTATION de MARIE, a corporation organized and existing under the laws of the State of Maine and located at Biddeford, in the County of York and said State of Maine, in consideration of One Hundred Fifty Thousand Dollars ($150,000.00) paid by THE FRANCISCAN FATHERS OF MAINE, a corporation duly organized by law and having an established place of business at 605 Pool Road, in said Biddeford, the receipt whereof it does hereby acknowledge, does hereby give, grant, bargain, sell and convey, unto the said The Franciscan Fathers of Maine, its successors or assigns, forever, the following described property: I.R.S. One Hundred and Sixty Five Dollars

Parcel 1

A certain lot or parcel of land, with the buildings thereon, situated in

said Biddeford and bounded and described as follows:

BEGINNING at a point on the Northerly side of the Hill's Beach Road, so-called, in said Biddeford, said point being the Westerly corner of the land herein conveyed and being in the Southerly line of land formerly of one Finney and now of Couvent de la Presentation de Marie, and being marked by an iron stake driven into the ground; thence South eighty-two degrees eight minutes East (S 82° 08' E) two hundred fourteen and forty-six one-hundredths (214.46) feet by said Hill's Beach Road to an iron stake driven into the ground; thence North eighty-one degrees forty-two minutes East (N 81° 42' E) five hundred forty-five and five one-hundredths (545.05) feet by said Hill's Beach Road to an iron stake driven into the ground; thence South fifty degrees thirty-five minutes East (S 50° 35' E) two hundred thirty-eight and forty-seven one-hundredths (238.47) feet by said Hill's Beach Road to an iron stake driven into the ground and other land of this Grantor; thence North eighty-six degrees twenty-seven minutes East (N 86° 27' E) sixteen and ninety-one one-hundredths (16.91) feet by said other land of this Grantor to a drill hole into the ledge and land now or formerly of John J. Traynor; thence North three degrees thirty-three minutes West (N 3° 33' W) one hundred thirty-three and five tenths (133.5) feet by said land of John J. Traynor, land now or formerly of one Michael Reddy and a reserved street as shown on a plan of land of William A. Chadbourne, drawn by Z. G. Staples, July 14, 1874, and recorded in York County Registry of Deeds in Plan Book 2, Page 40, and by the stone wall to an iron stake driven into the ground at the Southwesterly corner of land now or formerly of William Libby; thence North twenty-two degrees forty-one minutes West (N 22° 41' W) one hundred twenty-eight and one-half (128½) feet by said land of William Libby, other land of this Grantor and by the stone wall to an angle in said stone wall; thence North fifty-five degrees fifty-seven minutes East (N 55° 57' E) three hundred ninety-three and nineteen one-hundredths (393.19) feet by said other land of this Grantor, by a reserved street as shown on said plan, and land now or formerly of Thomas Gallagher and by the fence and wall to an iron stake driven into the ground at the top of the bank; thence this same course to Saco River; thence Northerly, Northwesterly and Westerly by said River to an iron stake driven into the ground at a point of ledge and to said other land of this Grantor; thence South forty-one degrees East (S 41° E) three hundred thirty-nine and seven tenths (339.7) feet to an iron stake driven into the ground at the stone wall; thence South sixty-three degrees West (S 63° W) fifty-six and three tenths (56.3)feet by said stone wall to an iron stake driven into the ground; thence South sixty-nine degrees fifteen minutes West (S 69° 15' W) one hundred sixteen and one-half (116½) feet by said

wall to
forty m
(128.5)
sixty-e
tenths
North e
nine te
thence
seventy
into th
19' W)
into th
one hur
into th
W) one
of begi
of this

of the
Road;
sixtee
cel to
thence
sevent
Beach
twenty
of beg

calle
bound

by Z.
of th
dred
(50)
by la
E) or

wall to an iron stake driven into the ground; thence South fifty-three degrees forty minutes West (S 53° 40' W) one hundred twenty-eight and five tenths (128.5) feet by said wall to an iron stake driven into the ground; thence South sixty-eight degrees nineteen minutes West (S 68° 19' W) one hundred and four tenths (100.4) feet by said wall to an iron stake driven into the ground; thence North eighty-eight degrees four minutes West (N 88° 04' W) seventy-seven and nine tenths (77.9) feet by said wall to an iron stake driven into the ground; thence South seventy-four degrees twenty-three minutes West (S 74° 23' W) seventy-nine and two tenths (79.2) feet by said wall to an iron stake driven into the ground; thence South fifty-seven degrees nineteen minutes West (S 57° 19' W) ninety-five and one tenth (95.1) feet by said wall to an iron stake driven into the ground; thence South sixty-four degrees ten minutes West (S 64° 10' W) one hundred six and nine tenths (106.9) feet by said wall to an iron stake driven into the ground; thence South sixty-five degrees thirty minutes West (S 65° 30' W) one hundred forty-four and eight tenths (144.8) feet by said wall to the point of beginning. The last ten courses described being bounded by said other land of this Grantor. The above courses refer to the 1931 magnetic meridian.

Parcel 2

Also another certain lot of land, bounded and described as follows:

BEGINNING at an iron stake driven into the ground at the Southerly corner of the above described parcel and on the Northerly side of said Hill's Beach Road; thence North eighty-six degrees twenty-seven minutes East (N 86° 27' E) sixteen and ninety-one one-hundredths (16.91) feet by said above described parcel to a drill hole in the ledge and land now or formerly of John J. Traynor; thence South three degrees thirty-three minutes East (S 3° 33' E) fifteen and seventy-five one-hundredths (15.75) feet by said land of Traynor to said Hill's Beach Road; thence North fifty degrees thirty-five minutes West (N 50° 35' W) twenty-three and eleven one-hundredths (23.11) feet by said road to the point of beginning.

Parcel 3

Also another certain lot or parcel of land, situated at Hill's Beach, so-called, in said Biddeford, and adjoining the first above described parcel, bounded and described as follows:

BEGINNING at the Northwest corner of Lot #18, on a plan of land made by Z. G. Staples for William A. Chadbourne, dated July 14, A. D. 1874, at land of the late Selucus Adams and S. S. Mitchell; thence running Southerly one hundred (100) feet to Lot #17 on said plan; thence Westerly by last named lot fifty (50) feet; thence North forty-eight degrees West (N 48° W) forty-eight (48) feet by land of said Adams; thence North fifty-one and one-half degrees East (N 51½° E) one hundred six (106) feet by land of said Adams and Mitchell to the place of

48
pg 146

Book 1484

beginning, and containing about five thousand four hundred and twenty-four (5,424) square feet, being the same parcel of land as described in deed of James B. Marr and others to Caroline P. Adams, dated April 1, 1891 and recorded in York County Registry of Deeds in Book 443, Page 88.

The above described premises were conveyed to the within Grantor by Les Soeurs de la Presentation de Marie by deed of Warranty, dated September 30, 1932 and recorded in York County Registry of Deeds in Book 834, Page 67.

Parcel 4

Also another certain lot or parcel of land, together with the buildings thereon, situated in said Biddeford and known as the old Ralph Tristram Jordan place situated on the northeasterly side of the Pool Road, so-called, bounded on the southwesterly side by said Pool Road; southeasterly by the road to the beach and land formerly of Mrs. Horace Woodman; on the northeasterly side by the Saco River; and on the northwesterly side by land, now or formerly of J. B. Coolbroth.

For more particular description of the premises hereinabove last described, reference is made to decree of Supreme Judicial Court of Maine in the matter of Hanford E. Finney against claiments known and unknown dated October 3, 1919, and recorded in said York County Registry of Deeds, Book 671, Page 374.

All fixtures and articles of whatever nature permanently attached to said buildings are included in this conveyance.

TO HAVE AND TO HOLD the aforegranted and bargained premises, with all privileges and appurtenances thereof to the said The Franciscan Fathers of Maine, its successors or assigns, to its and their use and behoof forever.

AND it does COVENANT with the said Grantee, its successors or assigns, that it is lawfully seized in fee of the premises; that they are free of all encumbrances; that it has good right to sell and convey the same to the said Grantee to hold as aforesaid; and that it shall and will Warrant and Defend the same to the said Grantee, its successors or assigns forever, against the lawful claims and demands of all persons.

IN WITNESS WHEREOF, the said Couvent de la Presentation de Marie has caused this instrument to be executed and its corporate seal affixed thereto by - - its Treasurer, thereunto duly authorized, this eighteenth day of April, in the year of our Lord one thousand nine hundred and sixty-two.

Signed, Sealed and Delivered
in Presence of

Harold D. Carroll

COUVENT de la PRESENTATION de MARIE
(Corporate Seal)
By Sister St. Leon of Rome
Leona Lafleur
Its Treasurer, thereunto duly authorized.

Attachment 6
Letter of Financial Capacity

UNIVERSITY OF NEW ENGLAND

Biddeford Campus
11 Hills Beach Road
Biddeford, ME 04005
(207) 283-0171 T

Portland Campus
716 Stevens Avenue
Portland, ME 04103
(207) 797-7261 T

April 14, 2025

To Whom It May Concern:

The University of New England plans to construct a research pier facility, along with an associated access road, on its Biddeford Campus. This new facility will have an estimated total project cost of $5,500,000. The University of New England has received a federal appropriation for $3,500,000 for this project, a and another $1,000,000 has already been received in private donations. The remainder of the project will be financed by the university.

Sincerely,

Alan Thibeault
Vice President for University Operations

Attachment 7
Stormwater Management Report



GEI Consultants

Stormwater Management Report

UNE Marine Science Center Pier

Submitted to:
University of New England
11 Hills Beach Road
Biddeford, ME 04005

Submitted by:
GEI Consultants, Inc.
5 Milk Street
Portland, ME 04101
207-797-8901

September 2023
Revision C. June 2025
Project 2203703

STATE OF MAINE
BRIAN M. MCDEVITT
PE18260
LICENSED PROFESSIONAL ENGINEER
6/9/2025



Brian McDevitt, P.E.
Senior Civil Engineer

Daniel J. Bannon, P.E. CFM
Project Manager / Sr. Waterfront Engineer

Table of Contents

1. Introduction **2**

2. Methodology **5**

3. Pre-Development Conditions **6**

4. Post-Development Conditions **8**

5. Stormwater Management **10**

6. Conclusions **14**

Appendices

A. USDA NRCS Soil Survey Report
B. Pre-Development HydroCAD Calculations
C. Post-Development HydroCAD Calculations
D. Inspection and Maintenance Plan

Drawings

SW-01 PRE-DEVELOPMENT DRAINAGE PLAN
SW-02 POST-DEVELOPMENT DRAINAGE PLAN
SW-03 TREATMENT AREA PLAN

C-001 EXISTING CONDITIONS PLAN
C-002 DEMOLITION AND CONSTRUCTION STAGING
C-003 SITE PLAN
C-004 GRADING AND DRAINAGE PLAN
C-005 EROSION CONTROL PLAN
C-006 ACCESS ROAD PLAN AND PROFILE STA 1+00 TO MATCHLINE STA 4+00
C-007 ACCESS ROAD PLAN AND PROFILE MATCHLINE STA 4+00 TO STA 6+60
C-008 ACCESS ROAD TYPICAL SECTION
C-009 ACCESS ROAD SECTIONS 2+00 TO 3+75
C-010 ACCESS ROAD SECTIONS 4+00 TO 5+75
C-011 SITE DETAILS I
C-012 EROSION CONTROL NOTES
C-013 EROSION CONTROL DETAILS I
C-014 EROSION CONTROL DETAILS II
C-015 REVEGETATION PLAN
C-016 REVEGETATION NOTES, DETAILS, AND SCHEDULES

DJB:BM:bdp

B:\Working\UNIVERSITY OF NEW ENGLAND\2203703 UNE Marine Science Center Pier\06_REGULATORY\Stormwater\UNE MSC Stormwater Report Rev. 06-05-2025.docx

1. Introduction

The University of New England (UNE) campus is located along the Saco River in Biddeford, ME. The Marine Science Center is located on the waterfront at the easterly end of campus (Fig. 1) approximately opposite Camp Ellis in Saco. To support MSC research activities, UNE proposes to construct a pier from the shore adjacent to the MSC into the Saco River to provide an all-tide access facility for small and shallow draft vessels (skiffs, landing craft, up to approximately 3-foot draft), with tidally-restricted access for larger vessels.



Fig. 1. Aerial Photo of University of New England Marine Science Center Waterfront

In 2008-2010, UNE worked with Baker Design Consultants (BDC) to undertake a concept planning study for the proposed pier. In this study, nine alternative designs were developed for water access facilities along the UNE waterfront consisting of various configurations of piers, boat ramps, and upland access and support facilities. The alternatives were evaluated on a range of criteria including technical criteria, functionality, constructability, cost and others to identify a preferred facility location. The nine alternatives evaluated through this study are shown in Fig. 2. At the conclusion of this study, Site 7 (directly in front of the Marine Science Center building) was identified as the preferred facility location (Site) to develop a new pier facility that would consist of a pile-supported pier extending from shore out into the Saco River.

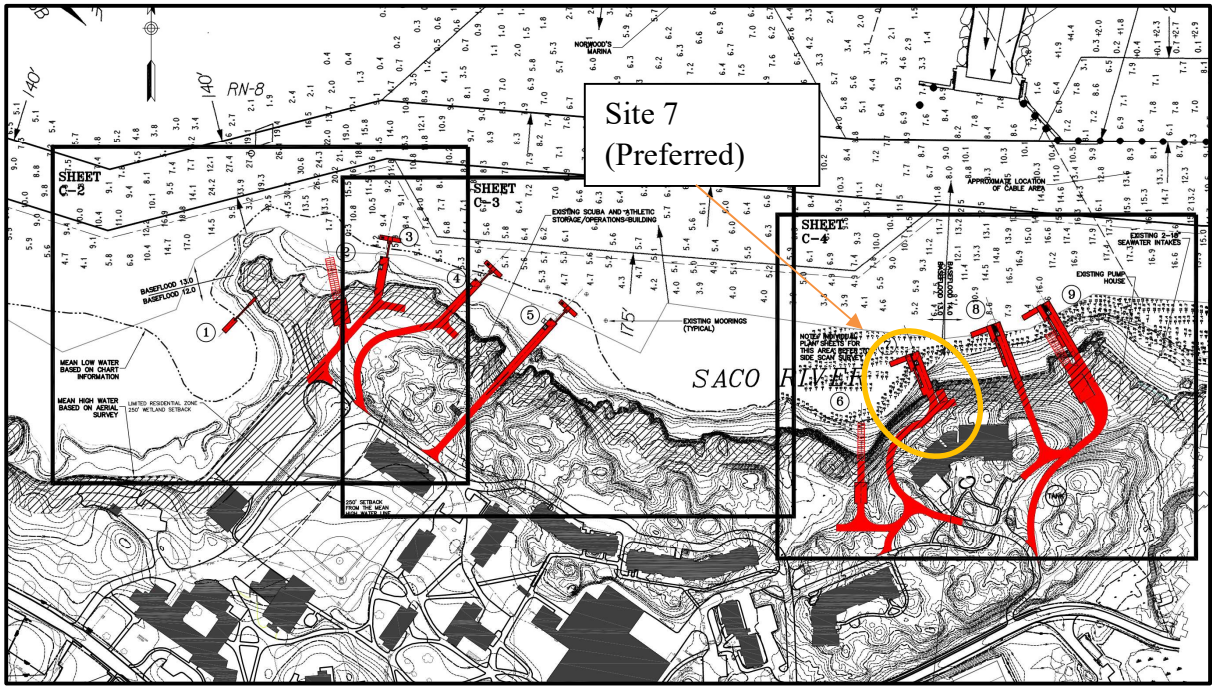

Fig. 2. Pier Location Alternatives from BDC Feasibility Study

In 2015-2016, UNE worked with BDC to undertake further design studies for a pier at the preferred location to investigate structure dimensions, orientation, rough order of magnitude costs, and impacts to coastal resources and features. As part of this evaluation, a preliminary geotechnical investigation was undertaken by GZA Geoenvironmental that included one water boring, two probes, and four test pits. At the conclusion of this phase of work, three alternative layouts were developed and reviewed with staff from UNE, the City of Biddeford, and the Saco River Corridor Commission and memorialized in a memo from BDC dated March 22, 2016.

In February 2022, UNE resumed design of the new proposed pier working with GEI Consultants to confirm conceptual layout for the pier and access road, and undertake design through 100% design and bid documents, as well as coordinate with UNE's consultant Site Design Associates for permitting of the proposed facility.

The proposed facility includes the following:

1. A pile supported pier structure extending from shore into the Saco River. The proposed pier includes an approximately 130-foot-long approach section extending from shore and an 80-foot long pier head section oriented roughly parallel to the direction of flow in the river. The pier consists of a concrete superstructure on steel pipe piles, with timber fender piles for vessel berthing and floating docks, and a pile supported gangway lifting beam to allow the gangway ramp to be temporarily removed from the water.

2. A floating dock system consisting of one 8-foot by 24-foot float, one 8-foot by 26-foot 10-inch float, and one 12-foot by 30-foot gangway landing float to provide all-tide vessel access for UNE's vessels on the west side of the pier, and a single 6-foot by 20-foot floating dock to provide a tie-up location for the City of Biddeford Fire Boat on the east side of the pier.
3. An 80-foot by 5-foot gangway to provide ADA compliant access to the float system.
4. An upland access road connecting the existing road at the MSC to the proposed pier, including associated site grading, drainage, and stormwater management features.

2. Methodology

Technical Release No. 22 (TR20) was used to calculate the existing and developed runoff from the project area. Hydrographs have been generated for the 2, 10, and 25-year frequency design storm events utilizing the NRCS Type III storm distribution and the 24-hour regional data from York County's rainfall data as required by MaineDEP. The rainfall amounts for York County are listed below:

Table 1-Existing 24 Hour Rainfall Frequency			
Rainfall amounts in Inches			
Design Storm	***2-Year***	***10-Year***	***25-Year***
	3.21	4.83	6.11

The following guidelines were utilized in the design of the Site's stormwater measures and BMPs (MaineDEP Stormwater Guidelines, Chapter 500):

1. Waiver of the flooding standard. A project is eligible for a waiver from the flooding standard if it discharges to a coastal wetland, a great pond, or a major river segment. A waiver is available for a project in the watershed of a coastal wetland, a great pond, or a major river segment provide the applicant demonstrates that the project convey stormwater exclusively in sheet flow, in a manmade open channel or in a piped system directly into one of these resources.
2. The redistribution of stormwater discharges standard will be met by discharging to a level spreader. The peak stormwater flow rate to a level spreader due to runoff from a 10-year, 24-hours storm must be less that 0.25 cubic feet per second (0.25 cfs) per foot length of level spreader.
3. Project will meet the erosion and sedimentation control standards found in Maine Department of Environmental Protection Guidelines, Chapter 500, Appendix A.

3. Pre-Development Conditions

1. Land Use

   Presently, the Site is the location of the University of New England Girard Marine Science Center. However, the existing buildings and parking lots exist outside of the limits of this project. Runoff generated from the buildings and parking lots in conveyed via underground pipes to the south, away from the Saco River.

   The proposed project limits currently consists of predominantly wooded areas. The southeast corner of the Site contains gravel path.

2. Topography

   The Site is mainly comprised of steeply sloped wooded areas with slopes near 20% for most of the Site. The Site mostly slopes to the north towards the Saco River/Atlantic Ocean. Per the NRCS WebSoil Survey, the Site is comprised almost completely of sandy, stony soil. These sandy soils are rated as Hydrologic Group D. A copy of the Web Soil Survey can be found in the Appendices.

3. Existing Drainage Area

   Presently, the runoff from the Site flows via overland flow to three different points of analysis, hereafter known as DP1, DP2 and DP3, with associated drainage areas 1S, 2S and 3S, respectively. The predevelopment drainage areas are described below:

   A map entitled Pre-Development Drainage Plan is included in the Drawings section of this report. Additionally, the HydroCAD model and calculations can also be found in the Appendix.

   Predevelopment Area 1S is the smallest of the existing drainage areas and is ±0.460 acres which consists of wooded areas. Runoff from Predevelopment Area 1S flows overland from the rear of the Girard Marine Science Center to the northeast and directly into the Saco River/Atlantic Ocean at DP1.

   Predevelopment Area 2S is ±0.637 acres and can be found in the middle of the Site. Predevelopment Area 2S consists of all wooded areas. Runoff from Predevelopment Area 2S flows via overland flow from a ledge in the middle of the Site to the north to the Saco River/Atlantic Ocean at DP2.

Predevelopment Area 3S is ±1.461 acres and comprises the eastern most portion of the Site. Predevelopment Areas 3S consists mostly of wooded areas and contains a gravel path leading to the lower lying wetlands and sand beaches along the Saco River/Atlantic Ocean. Runoff from Predevelopment Area 3S from the paved walkway at the Girard Marine Science Center to the northeast to the Saco River/Atlantic Ocean at DP3.

Tables 2A, 2B and 2C below list the total runoff for each Predevelopment Area:

Table 2A-Predevelopment Area 1S Runoff
Rainfall amounts in cubic feet per second

Pre-Development Total	***2-Year***	***10-Year***	***25-Year***	***100-Year***
Peak Runoff Rate (cfs)	0.71	1.44	2.07	3.31

Table 2B-Predevelopment Area 2S Runoff
Rainfall amounts in cubic feet per second

Pre-Development Total	***2-Year***	***10-Year***	***25-Year***	***100-Year***
Peak Runoff Rate (cfs)	0.74	1.51	2.17	3.50

Table 2C-Predevelopment Area 3S Runoff
Rainfall amounts in cubic feet per second

Pre-Development Total	***2-Year***	***10-Year***	***25-Year***	***100-Year***
Peak Runoff Rate (cfs)	2.39	4.58	6.44	10.05

4. Post Development Conditions

1. Land Use

When fully developed, the Site will contain the following improvements:

a. A pile supported pier structure extending from shore into the Saco River. The proposed pier includes an approximately 130-foot-long approach section extending from shore and an 80-foot long pier head section oriented roughly parallel to the direction of flow in the river. The pier consists of a concrete superstructure on steel pipe piles, with timber fender piles for vessel berthing and floating docks, and a pile supported gangway lifting beam to allow the gangway ramp to be temporarily removed from the water.
b. A floating dock system consisting of one 8-foot by 24-foot float, one 8-foot by 26-foot 10-inch float, and one 12-foot by 30-foot gangway landing float to provide all-tide vessel access for UNE's vessels on the west side of the pier, and a single 6-foot by 20-foot floating dock to provide a tie-up location for the City of Biddeford Fire Boat on the east side of the pier.
c. An 80-foot by 5-foot gangway to provide ADA compliant access to the float system.
d. An upland superelevated access road connecting the existing road at the MSC to the proposed pier, including associated site grading, drainage, and stormwater management features.

These improvements will result in a total increase in impervious area of 0.249 acres. The increase in impervious area will be managed by the two bioretention filter cells to the north of the Girard Marine Science Center. Runoff will be conveyed to the bioretention filter cells via proposed vegetated swales along the low side of the superelevated access road.

The bioretention filter cells will slowly release captured stormwater via underground pipe into the Saco River/Atlantic Ocean.

2. Drainage Areas

The map entitled Post-Development Drainage Plan delineating all developed drainage areas can be found in the Drawings section of this report. For analysis, the Site was broken up into 5 different drainage areas hereafter known as 1S, 2S, 3S, 4S, and 5S.

Post Development Area 1S contains the area that conveys runoff to the western Bioretention Filter Cell B. This area contains impervious areas from the access road and the proposed vegetated areas behind the Girard Marine Science Center. Runoff is conveyed to the Bioretention Filter Cell B via vegetated swale. Runoff captured by the bioretention filter cell will be treated and slowly released via underground pipe to the outfall under the proposed pier and into the Saco River/Atlantic Ocean near DP1.

Post Development Area 2S contains the areas to the northwest of the Site that conveys runoff via over land flow from the Girard Marine Science Center to DP1. This area contains small impervious areas as it contains the northern shoulder of the access road and the transition from access road to pier. Runoff from this area will not be managed for water quality or peak rate reduction.

Post Development Area 3S contains the area that conveys runoff to the eastern Bioretention Filter Cell A. This area contains impervious area from the access road and the proposed vegetated areas behind and to the east of the Girard Marine Science Center. Runoff is conveyed to the Bioretention Filter Cell A via vegetated swale. Runoff captured by the bioretention filter cell will be treated and slowly released via underground pipe to the outfall to the north where it will run through a level spreader to further reduce peak flow rate. Runoff will leave the level spreader and reach the Saco River/Atlantic Ocean via overland flow near DP2.

Post Development Area 4S contains the area to the northeast of the Site that conveys runoff via over land flow from the Girard Marine Science Center to DP2. This area contains small impervious areas as it contains the northern shoulder of the access road and the level spreader. Runoff from this area will not be managed for water quality or peak rate reduction.

Post Development Drainage Area 5S contains the area to the eastern portion of the Site. This this area contains the southernmost portion of the proposed access road and the existing gravel path. Runoff from this area will be conveyed via overland flow to the Saco River/Atlantic Ocean at DP3.

5. Stormwater Management

1. Stormwater Quantity

The bioretention filter cells are proposed to reduce the peak runoff rate of the 2, 10, and 25-year storms to treat stormwater runoff from the Site in accordance with DEP standards. Despite this, efforts were made to minimize the peak runoff rate from the Site. The tables below summarize the peak rate of runoff for the Site:

TABLE No. 3A
Managed Total Peak Discharge Summary of the Proposed Conditions to Discharge Point DP1

Storm Event	2-Year		10-Year		25-Year		100-Year	
	Existing	**Proposed**	**Existing**	**Proposed**	**Existing**	**Proposed**	**Existing**	**Proposed**
Peak Runoff Rate (cfs)	0.71	1.02	1.44	1.85	2.07	2.54	3.31	3.88

TABLE No. 3B
Managed Total Peak Discharge Summary of the Proposed Conditions to Discharge Point DP2

Storm Event	2-Year		10-Year		25-Year		100-Year	
	Existing	**Proposed**	**Existing**	**Proposed**	**Existing**	**Proposed**	**Existing**	**Proposed**
Peak Runoff Rate (cfs)	0.74	1.24	1.51	2.31	2.17	3.22	3.50	4.98

TABLE No. 3C
Managed Total Peak Discharge Summary of the Proposed Conditions to Discharge Point DP3

Storm Event	2-Year		10-Year		25-Year		100-Year	
	Existing	**Proposed**	**Existing**	**Proposed**	**Existing**	**Proposed**	**Existing**	**Proposed**
Peak Runoff Rate (cfs)	2.39	2.23	4.58	4.26	6.44	5.99	10.05	9.35

The tables above show a relatively minor increase in the peak rate of stormwater runoff subsequent to development. The northern most outfall will discharge to a level spreader which will create sheet flow into the Saco River/Atlantic Ocean. The western most outfall will outlet through the pier concrete abutment. Because the area downgradient of the outlets is stable rock, there will be no impacts due to the minor

increase in runoff. Stormwater runoff from each of the subcatchments adjacent to the river is not considered a point discharge in either the existing or proposed conditions, and is dispersed over the entire frontage along the river.

Since this development outlets directly to a major river segment/ocean, the flooding standard is typically waived by DEP (Chapter 500-Section F.3.a). The City also typically waives the need to provide detention of stormwater runoff from this parcel of UNE's property due to the tidal nature of the receiving waters. A waiver has been requested.

2. Stormwater Quality

The project proposes to treat 76% of impervious development and 72% of all new development. As discussed in the preapplication meeting, the proposed development will be treated as a linear portion of the project. For a linear project, the minimum treatment level required is 70% for impervious development and 50% of all new development. Water Quality treatment level are found in the tables below.

TABLE No. 4

Water Quality Treatment Level

Subcatchment Area	Impervious Area (SF)	Landscaped Area (SF)	Developed Area (SF)	Filter Area Required (SF)	Filter Area Provided (SF)	Water Quality Volume Required (CF)	Water Quality Volume Provided (CF)	Sediment Forebay Volume Required (CF)	Sediment Forebay Volume Provided (CF)	BMP
1S	4,917	4,915	9,832	344	854	574	200			Bioretention Filter
2S	1,238	10,250	11,488	267	-	445	-			-
3S	4,476	8,889	13,365	402	565	669	380	144	115	Bioretention Filter
4S	295	17,234	17,529	359	-	599	-			-
5S	6,273	52,906	59,179	1,372	-	2,286	-			-
Total Treated	**13,071**	**13,804**	**80,203**	930	-	1,549				
Total Developed Impervious Area	**17,199**									
Total Developed Area	**111,393**									
Percent Developed Area Treated	**72%**									
Percent Developed Impervious Area Treated	**76%**									

3. Erosion and Sedimentation Control

BMP's such as stabilized construction entrance, silt fence and/or filter berms of erosion control mix, riprap pipe inlet and outlet protection, turf reinforcement matting, mulch and permanent seeding will be used to prevent erosion and downstream migration of sediment during construction. The locations of temporary and permanent erosion control measures are erosion and sedimentation control notes

and details are shown on the design drawing set.

4. Inspection and Maintenance

   The University of New England will be responsible for maintaining the stormwater facilities for the project. An Inspection and Maintenance Plan is included in the Appendix. The plan includes a draft of the Stormwater Drainage System Maintenance Agreement, to be finalized and recorded as a condition of approval.

6. Conclusions

The stormwater management for this project included a variety of BMPs to control both the quantity and quality of stormwater runoff. The HydroCAD calculations show a minimal increase in the stormwater runoff from the proposed Site however the Stormwater Quantity requirement can be waved since this development discharges directly to a major river segment/ocean, the flooding standards can be waived (Chapter 500-Section F.3.a).

Stormwater treatment BMPs have been designed to treat stormwater runoff from more than 70% of the developed impervious area with additional treatment credit from the implementation of Low Impact Development Measures. Based on the information provided, no adverse impacts to downstream receiving bodies are anticipated.

Appendix A

NRCS Web Soil Survey Report

United States Department of Agriculture

NRCS

Natural Resources Conservation Service

A product of the National Cooperative Soil Survey, a joint effort of the United States Department of Agriculture and other Federal agencies, State agencies including the Agricultural Experiment Stations, and local participants

Custom Soil Resource Report for York County, Maine



Preface

Soil surveys contain information that affects land use planning in survey areas. They highlight soil limitations that affect various land uses and provide information about the properties of the soils in the survey areas. Soil surveys are designed for many different users, including farmers, ranchers, foresters, agronomists, urban planners, community officials, engineers, developers, builders, and home buyers. Also, conservationists, teachers, students, and specialists in recreation, waste disposal, and pollution control can use the surveys to help them understand, protect, or enhance the environment.

Various land use regulations of Federal, State, and local governments may impose special restrictions on land use or land treatment. Soil surveys identify soil properties that are used in making various land use or land treatment decisions. The information is intended to help the land users identify and reduce the effects of soil limitations on various land uses. The landowner or user is responsible for identifying and complying with existing laws and regulations.

Although soil survey information can be used for general farm, local, and wider area planning, onsite investigation is needed to supplement this information in some cases. Examples include soil quality assessments (http://www.nrcs.usda.gov/wps/portal/nrcs/main/soils/health/) and certain conservation and engineering applications. For more detailed information, contact your local USDA Service Center (https://offices.sc.egov.usda.gov/locator/app?agency=nrcs) or your NRCS State Soil Scientist (http://www.nrcs.usda.gov/wps/portal/nrcs/detail/soils/contactus/?cid=nrcs142p2_053951).

Great differences in soil properties can occur within short distances. Some soils are seasonally wet or subject to flooding. Some are too unstable to be used as a foundation for buildings or roads. Clayey or wet soils are poorly suited to use as septic tank absorption fields. A high water table makes a soil poorly suited to basements or underground installations.

The National Cooperative Soil Survey is a joint effort of the United States Department of Agriculture and other Federal agencies, State agencies including the Agricultural Experiment Stations, and local agencies. The Natural Resources Conservation Service (NRCS) has leadership for the Federal part of the National Cooperative Soil Survey.

Information about soils is updated periodically. Updated information is available through the NRCS Web Soil Survey, the site for official soil survey information.

The U.S. Department of Agriculture (USDA) prohibits discrimination in all its programs and activities on the basis of race, color, national origin, age, disability, and where applicable, sex, marital status, familial status, parental status, religion, sexual orientation, genetic information, political beliefs, reprisal, or because all or a part of an individual's income is derived from any public assistance program. (Not all prohibited bases apply to all programs.) Persons with disabilities who require

alternative means for communication of program information (Braille, large print, audiotape, etc.) should contact USDA's TARGET Center at (202) 720-2600 (voice and TDD). To file a complaint of discrimination, write to USDA, Director, Office of Civil Rights, 1400 Independence Avenue, S.W., Washington, D.C. 20250-9410 or call (800) 795-3272 (voice) or (202) 720-6382 (TDD). USDA is an equal opportunity provider and employer.

Contents

Preface.....2
How Soil Surveys Are Made.....5
Soil Map.....8
Soil Map.....9
Legend.....10
Map Unit Legend.....11
Map Unit Descriptions.....11
York County, Maine.....13
Ba—Beaches, sand.....13
LyC—Lyman-Rock outcrop complex, 8 to 15 percent slopes.....13
LyE—Lyman-Rock outcrop complex, 15 to 80 percent slopes.....15
UH—Urban land-Hooksan complex, 0 to 8 percent slopes.....17
W—Water bodies.....18

How Soil Surveys Are Made

Soil surveys are made to provide information about the soils and miscellaneous areas in a specific area. They include a description of the soils and miscellaneous areas and their location on the landscape and tables that show soil properties and limitations affecting various uses. Soil scientists observed the steepness, length, and shape of the slopes; the general pattern of drainage; the kinds of crops and native plants; and the kinds of bedrock. They observed and described many soil profiles. A soil profile is the sequence of natural layers, or horizons, in a soil. The profile extends from the surface down into the unconsolidated material in which the soil formed or from the surface down to bedrock. The unconsolidated material is devoid of roots and other living organisms and has not been changed by other biological activity.

Currently, soils are mapped according to the boundaries of major land resource areas (MLRAs). MLRAs are geographically associated land resource units that share common characteristics related to physiography, geology, climate, water resources, soils, biological resources, and land uses (USDA, 2006). Soil survey areas typically consist of parts of one or more MLRA.

The soils and miscellaneous areas in a survey area occur in an orderly pattern that is related to the geology, landforms, relief, climate, and natural vegetation of the area. Each kind of soil and miscellaneous area is associated with a particular kind of landform or with a segment of the landform. By observing the soils and miscellaneous areas in the survey area and relating their position to specific segments of the landform, a soil scientist develops a concept, or model, of how they were formed. Thus, during mapping, this model enables the soil scientist to predict with a considerable degree of accuracy the kind of soil or miscellaneous area at a specific location on the landscape.

Commonly, individual soils on the landscape merge into one another as their characteristics gradually change. To construct an accurate soil map, however, soil scientists must determine the boundaries between the soils. They can observe only a limited number of soil profiles. Nevertheless, these observations, supplemented by an understanding of the soil-vegetation-landscape relationship, are sufficient to verify predictions of the kinds of soil in an area and to determine the boundaries.

Soil scientists recorded the characteristics of the soil profiles that they studied. They noted soil color, texture, size and shape of soil aggregates, kind and amount of rock fragments, distribution of plant roots, reaction, and other features that enable them to identify soils. After describing the soils in the survey area and determining their properties, the soil scientists assigned the soils to taxonomic classes (units). Taxonomic classes are concepts. Each taxonomic class has a set of soil characteristics with precisely defined limits. The classes are used as a basis for comparison to classify soils systematically. Soil taxonomy, the system of taxonomic classification used in the United States, is based mainly on the kind and character of soil properties and the arrangement of horizons within the profile. After the soil

scientists classified and named the soils in the survey area, they compared the individual soils with similar soils in the same taxonomic class in other areas so that they could confirm data and assemble additional data based on experience and research.

The objective of soil mapping is not to delineate pure map unit components; the objective is to separate the landscape into landforms or landform segments that have similar use and management requirements. Each map unit is defined by a unique combination of soil components and/or miscellaneous areas in predictable proportions. Some components may be highly contrasting to the other components of the map unit. The presence of minor components in a map unit in no way diminishes the usefulness or accuracy of the data. The delineation of such landforms and landform segments on the map provides sufficient information for the development of resource plans. If intensive use of small areas is planned, onsite investigation is needed to define and locate the soils and miscellaneous areas.

Soil scientists make many field observations in the process of producing a soil map. The frequency of observation is dependent upon several factors, including scale of mapping, intensity of mapping, design of map units, complexity of the landscape, and experience of the soil scientist. Observations are made to test and refine the soil-landscape model and predictions and to verify the classification of the soils at specific locations. Once the soil-landscape model is refined, a significantly smaller number of measurements of individual soil properties are made and recorded. These measurements may include field measurements, such as those for color, depth to bedrock, and texture, and laboratory measurements, such as those for content of sand, silt, clay, salt, and other components. Properties of each soil typically vary from one point to another across the landscape.

Observations for map unit components are aggregated to develop ranges of characteristics for the components. The aggregated values are presented. Direct measurements do not exist for every property presented for every map unit component. Values for some properties are estimated from combinations of other properties.

While a soil survey is in progress, samples of some of the soils in the area generally are collected for laboratory analyses and for engineering tests. Soil scientists interpret the data from these analyses and tests as well as the field-observed characteristics and the soil properties to determine the expected behavior of the soils under different uses. Interpretations for all of the soils are field tested through observation of the soils in different uses and under different levels of management. Some interpretations are modified to fit local conditions, and some new interpretations are developed to meet local needs. Data are assembled from other sources, such as research information, production records, and field experience of specialists. For example, data on crop yields under defined levels of management are assembled from farm records and from field or plot experiments on the same kinds of soil.

Predictions about soil behavior are based not only on soil properties but also on such variables as climate and biological activity. Soil conditions are predictable over long periods of time, but they are not predictable from year to year. For example, soil scientists can predict with a fairly high degree of accuracy that a given soil will have a high water table within certain depths in most years, but they cannot predict that a high water table will always be at a specific level in the soil on a specific date.

After soil scientists located and identified the significant natural bodies of soil in the survey area, they drew the boundaries of these bodies on aerial photographs and

identified each as a specific map unit. Aerial photographs show trees, buildings, fields, roads, and rivers, all of which help in locating boundaries accurately.

Soil Map

The soil map section includes the soil map for the defined area of interest, a list of soil map units on the map and extent of each map unit, and cartographic symbols displayed on the map. Also presented are various metadata about data used to produce the map, and a description of each soil map unit.



Map Scale: 1:1,520 if printed on A landscape (11" x 8.5") sheet.

N

Meters
0 20 40 80 120

Feet
0 50 100 200 300

Map projection: Web Mercator Corner coordinates: WGS84 Edge tics: UTM Zone 19N WGS84

MAP LEGEND

Area of Interest (AOI)
- Area of Interest (AOI)

Soils
- Soil Map Unit Polygons
- Soil Map Unit Lines
- Soil Map Unit Points

Special Point Features
- Blowout
- Borrow Pit
- Clay Spot
- Closed Depression
- Gravel Pit
- Gravelly Spot
- Landfill
- Lava Flow
- Marsh or swamp
- Mine or Quarry
- Miscellaneous Water
- Perennial Water
- Rock Outcrop
- Saline Spot
- Sandy Spot
- Severely Eroded Spot
- Sinkhole
- Slide or Slip
- Sodic Spot
- Spoil Area
- Stony Spot
- Very Stony Spot
- Wet Spot
- Other
- Special Line Features

Water Features
- Streams and Canals

Transportation
- Rails
- Interstate Highways
- US Routes
- Major Roads
- Local Roads

Background
- Aerial Photography

MAP INFORMATION

The soil surveys that comprise your AOI were mapped at 1:20,000.

Warning: Soil Map may not be valid at this scale.

Enlargement of maps beyond the scale of mapping can cause misunderstanding of the detail of mapping and accuracy of soil line placement. The maps do not show the small areas of contrasting soils that could have been shown at a more detailed scale.

Please rely on the bar scale on each map sheet for map measurements.

Source of Map: Natural Resources Conservation Service
Web Soil Survey URL:
Coordinate System: Web Mercator (EPSG:3857)

Maps from the Web Soil Survey are based on the Web Mercator projection, which preserves direction and shape but distorts distance and area. A projection that preserves area, such as the Albers equal-area conic projection, should be used if more accurate calculations of distance or area are required.

This product is generated from the USDA-NRCS certified data as of the version date(s) listed below.

Soil Survey Area: York County, Maine
Survey Area Data: Version 21, Aug 30, 2022

Soil map units are labeled (as space allows) for map scales 1:50,000 or larger.

Date(s) aerial images were photographed: Jun 19, 2020—Sep 20, 2020

The orthophoto or other base map on which the soil lines were compiled and digitized probably differs from the background imagery displayed on these maps. As a result, some minor shifting of map unit boundaries may be evident.

Map Unit Legend

Map Unit Symbol	Map Unit Name	Acres in AOI	Percent of AOI
Ba	Beaches, sand	0.3	5.5%
LyC	Lyman-Rock outcrop complex, 8 to 15 percent slopes	1.7	27.7%
LyE	Lyman-Rock outcrop complex, 15 to 80 percent slopes	3.3	54.8%
UH	Urban land-Hooksan complex, 0 to 8 percent slopes	0.2	3.1%
W	Water bodies	0.5	8.9%
Totals for Area of Interest		**6.1**	**100.0%**

Map Unit Descriptions

The map units delineated on the detailed soil maps in a soil survey represent the soils or miscellaneous areas in the survey area. The map unit descriptions, along with the maps, can be used to determine the composition and properties of a unit.

A map unit delineation on a soil map represents an area dominated by one or more major kinds of soil or miscellaneous areas. A map unit is identified and named according to the taxonomic classification of the dominant soils. Within a taxonomic class there are precisely defined limits for the properties of the soils. On the landscape, however, the soils are natural phenomena, and they have the characteristic variability of all natural phenomena. Thus, the range of some observed properties may extend beyond the limits defined for a taxonomic class. Areas of soils of a single taxonomic class rarely, if ever, can be mapped without including areas of other taxonomic classes. Consequently, every map unit is made up of the soils or miscellaneous areas for which it is named and some minor components that belong to taxonomic classes other than those of the major soils.

Most minor soils have properties similar to those of the dominant soil or soils in the map unit, and thus they do not affect use and management. These are called noncontrasting, or similar, components. They may or may not be mentioned in a particular map unit description. Other minor components, however, have properties and behavioral characteristics divergent enough to affect use or to require different management. These are called contrasting, or dissimilar, components. They generally are in small areas and could not be mapped separately because of the scale used. Some small areas of strongly contrasting soils or miscellaneous areas are identified by a special symbol on the maps. If included in the database for a given area, the contrasting minor components are identified in the map unit descriptions along with some characteristics of each. A few areas of minor components may not have been observed, and consequently they are not mentioned in the descriptions, especially where the pattern was so complex that it was impractical to make enough observations to identify all the soils and miscellaneous areas on the landscape.

The presence of minor components in a map unit in no way diminishes the usefulness or accuracy of the data. The objective of mapping is not to delineate pure taxonomic classes but rather to separate the landscape into landforms or landform segments that have similar use and management requirements. The delineation of such segments on the map provides sufficient information for the development of resource plans. If intensive use of small areas is planned, however, onsite investigation is needed to define and locate the soils and miscellaneous areas.

An identifying symbol precedes the map unit name in the map unit descriptions. Each description includes general facts about the unit and gives important soil properties and qualities.

Soils that have profiles that are almost alike make up a *soil series*. Except for differences in texture of the surface layer, all the soils of a series have major horizons that are similar in composition, thickness, and arrangement.

Soils of one series can differ in texture of the surface layer, slope, stoniness, salinity, degree of erosion, and other characteristics that affect their use. On the basis of such differences, a soil series is divided into *soil phases*. Most of the areas shown on the detailed soil maps are phases of soil series. The name of a soil phase commonly indicates a feature that affects use or management. For example, Alpha silt loam, 0 to 2 percent slopes, is a phase of the Alpha series.

Some map units are made up of two or more major soils or miscellaneous areas. These map units are complexes, associations, or undifferentiated groups.

A *complex* consists of two or more soils or miscellaneous areas in such an intricate pattern or in such small areas that they cannot be shown separately on the maps. The pattern and proportion of the soils or miscellaneous areas are somewhat similar in all areas. Alpha-Beta complex, 0 to 6 percent slopes, is an example.

An *association* is made up of two or more geographically associated soils or miscellaneous areas that are shown as one unit on the maps. Because of present or anticipated uses of the map units in the survey area, it was not considered practical or necessary to map the soils or miscellaneous areas separately. The pattern and relative proportion of the soils or miscellaneous areas are somewhat similar. Alpha-Beta association, 0 to 2 percent slopes, is an example.

An *undifferentiated group* is made up of two or more soils or miscellaneous areas that could be mapped individually but are mapped as one unit because similar interpretations can be made for use and management. The pattern and proportion of the soils or miscellaneous areas in a mapped area are not uniform. An area can be made up of only one of the major soils or miscellaneous areas, or it can be made up of all of them. Alpha and Beta soils, 0 to 2 percent slopes, is an example.

Some surveys include *miscellaneous areas*. Such areas have little or no soil material and support little or no vegetation. Rock outcrop is an example.

York County, Maine

Ba—Beaches, sand

Map Unit Setting

National map unit symbol: 2y080
Elevation: 0 to 20 feet
Mean annual precipitation: 36 to 71 inches
Mean annual air temperature: 39 to 55 degrees F
Frost-free period: 145 to 240 days
Farmland classification: Not prime farmland

Map Unit Composition

Beaches, sandy surface: 90 percent
Estimates are based on observations, descriptions, and transects of the mapunit.

Description of Beaches, Sandy Surface

Setting

Landform: Back-barrier beaches, barrier beaches, beaches, shores
Landform position (two-dimensional): Footslope
Landform position (three-dimensional): Riser
Down-slope shape: Convex
Across-slope shape: Linear
Parent material: Beach sand

Typical profile

C1 - 0 to 10 inches: sand

Properties and qualities

Slope: 0 to 8 percent
Runoff class: Negligible
Capacity of the most limiting layer to transmit water (Ksat): Moderately high to very high (1.42 to 99.90 in/hr)
Depth to water table: About 0 to 12 inches
Frequency of flooding: Very frequent
Maximum salinity: Moderately saline to strongly saline (8.0 to 16.0 mmhos/cm)
Available water supply, 0 to 60 inches: Very low (about 0.5 inches)

Interpretive groups

Land capability classification (irrigated): None specified
Land capability classification (nonirrigated): 8
Hydric soil rating: Unranked

LyC—Lyman-Rock outcrop complex, 8 to 15 percent slopes

Map Unit Setting

National map unit symbol: 2trqj
Elevation: 0 to 790 feet
Mean annual precipitation: 36 to 65 inches
Mean annual air temperature: 36 to 52 degrees F

Frost-free period: 60 to 160 days
Farmland classification: Not prime farmland

Map Unit Composition

Lyman, very stony, and similar soils: 62 percent
Rock outcrop: 25 percent
Estimates are based on observations, descriptions, and transects of the mapunit.

Description of Lyman, Very Stony

Setting

Landform: Hills, mountains
Landform position (two-dimensional): Summit, shoulder, backslope
Landform position (three-dimensional): Mountaintop, mountainbase, side slope, crest
Down-slope shape: Convex
Across-slope shape: Convex
Parent material: Loamy supraglacial till derived from granite and gneiss and/or loamy supraglacial till derived from phyllite and/or loamy supraglacial till derived from mica schist

Typical profile

Oe - 0 to 1 inches: moderately decomposed plant material
A - 1 to 3 inches: loam
E - 3 to 5 inches: fine sandy loam
Bhs - 5 to 7 inches: loam
Bs1 - 7 to 11 inches: loam
Bs2 - 11 to 18 inches: channery loam
R - 18 to 28 inches: bedrock

Properties and qualities

Slope: 8 to 15 percent
Surface area covered with cobbles, stones or boulders: 1.5 percent
Depth to restrictive feature: 11 to 24 inches to lithic bedrock
Drainage class: Somewhat excessively drained
Capacity of the most limiting layer to transmit water (Ksat): Very low to high (0.00 to 14.03 in/hr)
Depth to water table: More than 80 inches
Frequency of flooding: None
Frequency of ponding: None
Available water supply, 0 to 60 inches: Low (about 3.4 inches)

Interpretive groups

Land capability classification (irrigated): None specified
Land capability classification (nonirrigated): 6s
Hydrologic Soil Group: D
Ecological site: F144BY701ME - Shallow Till
Hydric soil rating: No

Description of Rock Outcrop

Setting

Landform: Hills, mountains
Landform position (two-dimensional): Summit, shoulder, backslope
Landform position (three-dimensional): Mountaintop, mountainbase, side slope, crest
Down-slope shape: Convex

Across-slope shape: Convex
Parent material: Igneous and metamorphic rock

Typical profile
R - 0 to 10 inches: bedrock

Properties and qualities
Slope: 8 to 15 percent
Depth to restrictive feature: 0 inches to lithic bedrock
Capacity of the most limiting layer to transmit water (Ksat): Very low to very high (0.00 to 14.17 in/hr)

Interpretive groups
Land capability classification (irrigated): None specified
Land capability classification (nonirrigated): 8s
Ecological site: F144BY801ME - Rockland (reserved)
Hydric soil rating: Unranked

LyE—Lyman-Rock outcrop complex, 15 to 80 percent slopes

Map Unit Setting
National map unit symbol: 2trqp
Elevation: 0 to 980 feet
Mean annual precipitation: 36 to 65 inches
Mean annual air temperature: 36 to 52 degrees F
Frost-free period: 60 to 160 days
Farmland classification: Not prime farmland

Map Unit Composition
Lyman, very stony, and similar soils: 60 percent
Rock outcrop: 30 percent
Estimates are based on observations, descriptions, and transects of the mapunit.

Description of Lyman, Very Stony

Setting
Landform: Hills, mountains
Landform position (two-dimensional): Summit, shoulder, backslope
Landform position (three-dimensional): Mountaintop, mountainflank, side slope, crest
Down-slope shape: Convex
Across-slope shape: Convex
Parent material: Loamy supraglacial till derived from granite and gneiss and/or loamy supraglacial till derived from phyllite and/or loamy supraglacial till derived from mica schist

Typical profile
Oe - 0 to 1 inches: moderately decomposed plant material
A - 1 to 3 inches: loam
E - 3 to 5 inches: fine sandy loam
Bhs - 5 to 7 inches: loam

Bs1 - 7 to 11 inches: loam
Bs2 - 11 to 18 inches: channery loam
R - 18 to 28 inches: bedrock

Properties and qualities

Slope: 15 to 80 percent
Surface area covered with cobbles, stones or boulders: 1.5 percent
Depth to restrictive feature: 11 to 24 inches to lithic bedrock
Drainage class: Somewhat excessively drained
Capacity of the most limiting layer to transmit water (Ksat): Very low to high (0.00 to 14.03 in/hr)
Depth to water table: More than 80 inches
Frequency of flooding: None
Frequency of ponding: None
Available water supply, 0 to 60 inches: Low (about 3.4 inches)

Interpretive groups

Land capability classification (irrigated): None specified
Land capability classification (nonirrigated): 7s
Hydrologic Soil Group: D
Ecological site: F144BY701ME - Shallow Till
Hydric soil rating: No

Description of Rock Outcrop

Setting

Landform: Hills, mountains
Landform position (two-dimensional): Summit, shoulder, backslope
Landform position (three-dimensional): Mountaintop, mountainflank, side slope, crest, free face
Down-slope shape: Convex
Across-slope shape: Convex
Parent material: Igneous and metamorphic rock

Typical profile

R - 0 to 10 inches: bedrock

Properties and qualities

Slope: 15 to 80 percent
Depth to restrictive feature: 0 inches to lithic bedrock
Capacity of the most limiting layer to transmit water (Ksat): Very low to very high (0.00 to 14.17 in/hr)

Interpretive groups

Land capability classification (irrigated): None specified
Land capability classification (nonirrigated): 8s
Ecological site: F144BY801ME - Rockland (reserved)
Hydric soil rating: Unranked

UH—Urban land-Hooksan complex, 0 to 8 percent slopes

Map Unit Setting

National map unit symbol: 2x1l1
Elevation: 0 to 50 feet
Mean annual precipitation: 36 to 71 inches
Mean annual air temperature: 39 to 55 degrees F
Frost-free period: 140 to 240 days
Farmland classification: Not prime farmland

Map Unit Composition

Urban land, coastal: 50 percent
Hooksan and similar soils: 30 percent
Estimates are based on observations, descriptions, and transects of the mapunit.

Description of Urban Land, Coastal

Setting

Landform: Dunes
Down-slope shape: Linear
Across-slope shape: Linear

Typical profile

M - 0 to 10 inches: cemented material

Properties and qualities

Slope: 0 to 8 percent
Depth to restrictive feature: 0 inches to manufactured layer
Runoff class: Very high
Capacity of the most limiting layer to transmit water (Ksat): Very low (0.00 to 0.00 in/hr)
Frequency of flooding: Rare
Available water supply, 0 to 60 inches: Very low (about 0.0 inches)

Interpretive groups

Land capability classification (irrigated): None specified
Land capability classification (nonirrigated): 8
Hydrologic Soil Group: D
Hydric soil rating: Unranked

Description of Hooksan

Setting

Landform: Dunes
Landform position (two-dimensional): Summit, shoulder, backslope, footslope
Landform position (three-dimensional): Side slope, base slope, crest
Down-slope shape: Convex
Across-slope shape: Convex, linear
Parent material: Sandy eolian deposits

Typical profile

C1 - 0 to 20 inches: sand
C2 - 20 to 30 inches: sand
C3 - 30 to 64 inches: sand

Properties and qualities

Slope: 0 to 8 percent
Depth to restrictive feature: More than 80 inches
Drainage class: Excessively drained
Runoff class: Negligible
Capacity of the most limiting layer to transmit water (Ksat): Very high (14.17 to 99.90 in/hr)
Depth to water table: More than 80 inches
Frequency of flooding: Rare
Frequency of ponding: None
Maximum salinity: Nonsaline (0.0 to 1.9 mmhos/cm)
Available water supply, 0 to 60 inches: Low (about 5.4 inches)

Interpretive groups

Land capability classification (irrigated): None specified
Land capability classification (nonirrigated): 7e
Hydrologic Soil Group: A
Ecological site: R149BY002MA - Coastal Dunes
Hydric soil rating: No

W—Water bodies

Map Unit Composition

Water: 100 percent
Estimates are based on observations, descriptions, and transects of the mapunit.

Description of Water

Setting

Landform: Hills

Appendix B

Pre Development HydroCAD Calculations

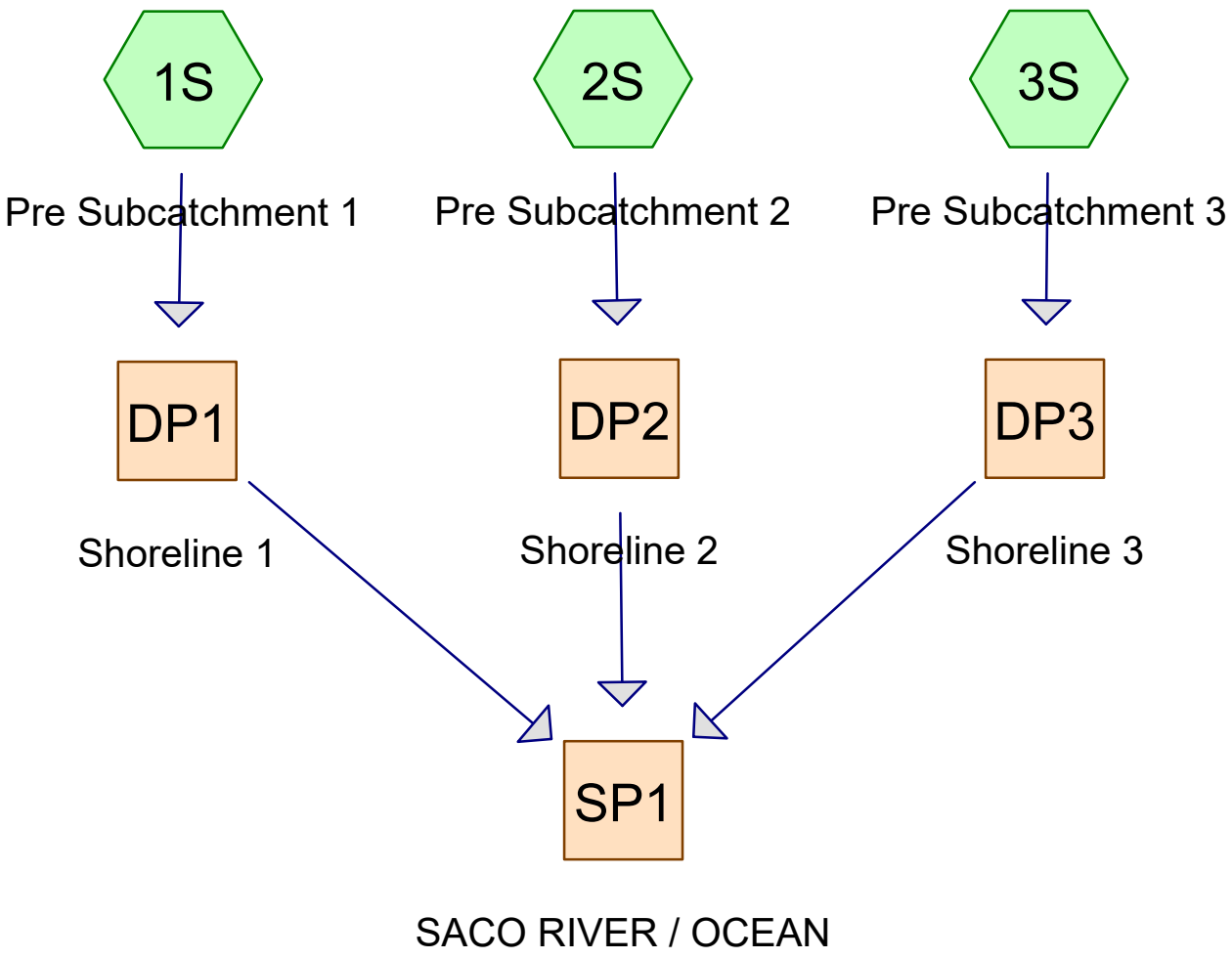

Subcat Reach Pond Link

Routing Diagram for UNE-PreDrainage
Prepared by GEI Consultants, Printed 7/9/2024
HydroCAD® 10.20-3c s/n 01250 © 2023 HydroCAD Software Solutions LLC

Project Notes

Defined 3 rainfall events from ME-York IDF

Rainfall Events Listing

Event#	Event Name	Storm Type	Curve	Mode	Duration (hours)	B/B	Depth (inches)	AMC
1	2-yr	Type III 24-hr		Default	24.00	1	3.30	2
2	10-yr	Type III 24-hr		Default	24.00	1	4.90	2
3	25-yr	Type III 24-hr		Default	24.00	1	6.20	2
4	100-yr	Type III 24-hr		Default	24.00	1	8.70	2

Area Listing (all nodes)

Area (acres)	CN	Description (subcatchment-numbers)
0.110	96	Gravel surface, HSG D (3S)
0.017	98	Roofs, HSG D (3S)
0.160	88	Sand Beach, HSG D (3S)
2.270	77	Woods, Good, HSG D (1S, 2S, 3S)
2.557	**79**	**TOTAL AREA**

Soil Listing (all nodes)

Area (acres)	Soil Group	Subcatchment Numbers
0.000	HSG A	
0.000	HSG B	
0.000	HSG C	
2.557	HSG D	1S, 2S, 3S
0.000	Other	
2.557		**TOTAL AREA**

Ground Covers (all nodes)

HSG-A (acres)	HSG-B (acres)	HSG-C (acres)	HSG-D (acres)	Other (acres)	Total (acres)	Ground Cover	Subcatchment Numbers
0.000	0.000	0.000	0.110	0.000	0.110	Gravel surface	3S
0.000	0.000	0.000	0.017	0.000	0.017	Roofs	3S
0.000	0.000	0.000	0.160	0.000	0.160	Sand Beach	3S
0.000	0.000	0.000	2.270	0.000	2.270	Woods, Good	1S, 2S, 3S
0.000	**0.000**	**0.000**	**2.557**	**0.000**	**2.557**	**TOTAL AREA**	

Time span=5.00-20.00 hrs, dt=0.05 hrs, 301 points
Runoff by SCS TR-20 method, UH=SCS, Weighted-CN
Reach routing by Stor-Ind+Trans method - Pond routing by Stor-Ind method

Subcatchment 1S: Pre Subcatchment 1 Runoff Area=20,023 sf 0.00% Impervious Runoff Depth>1.18"
Flow Length=138' Tc=4.0 min CN=77 Runoff=0.71 cfs 0.045 af

Subcatchment 2S: Pre Subcatchment 2 Runoff Area=27,744 sf 0.00% Impervious Runoff Depth>1.18"
Flow Length=198' Tc=12.7 min CN=77 Runoff=0.74 cfs 0.062 af

Subcatchment 3S: Pre Subcatchment 3 Runoff Area=63,622 sf 1.18% Impervious Runoff Depth>1.37"
Flow Length=445' Tc=7.0 min CN=80 Runoff=2.39 cfs 0.166 af

Reach DP1: Shoreline 1 Inflow=0.71 cfs 0.045 af
Outflow=0.71 cfs 0.045 af

Reach DP2: Shoreline 2 Inflow=0.74 cfs 0.062 af
Outflow=0.74 cfs 0.062 af

Reach DP3: Shoreline 3 Inflow=2.39 cfs 0.166 af
Outflow=2.39 cfs 0.166 af

Reach SP1: SACO RIVER / OCEAN Inflow=3.63 cfs 0.274 af
Outflow=3.63 cfs 0.274 af

Total Runoff Area = 2.557 ac Runoff Volume = 0.274 af Average Runoff Depth = 1.29"
99.33% Pervious = 2.540 ac 0.67% Impervious = 0.017 ac

Summary for Subcatchment 1S: Pre Subcatchment 1

Runoff = 0.71 cfs @ 12.07 hrs, Volume= 0.045 af, Depth> 1.18"
Routed to Reach DP1 : Shoreline 1

Runoff by SCS TR-20 method, UH=SCS, Weighted-CN, Time Span= 5.00-20.00 hrs, dt= 0.05 hrs
Type III 24-hr 2-yr Rainfall=3.30"

Area (sf)	CN	Description
20,023	77	Woods, Good, HSG D
20,023		100.00% Pervious Area

Tc (min)	Length (feet)	Slope (ft/ft)	Velocity (ft/sec)	Capacity (cfs)	Description
3.1	20	0.1000	0.11		**Sheet Flow, Tc-1** Woods: Light underbrush n= 0.400 P2= 3.30"
0.9	118	0.1780	2.11		**Shallow Concentrated Flow, Tc-2** Woodland Kv= 5.0 fps
4.0	138	Total			

Subcatchment 1S: Pre Subcatchment 1

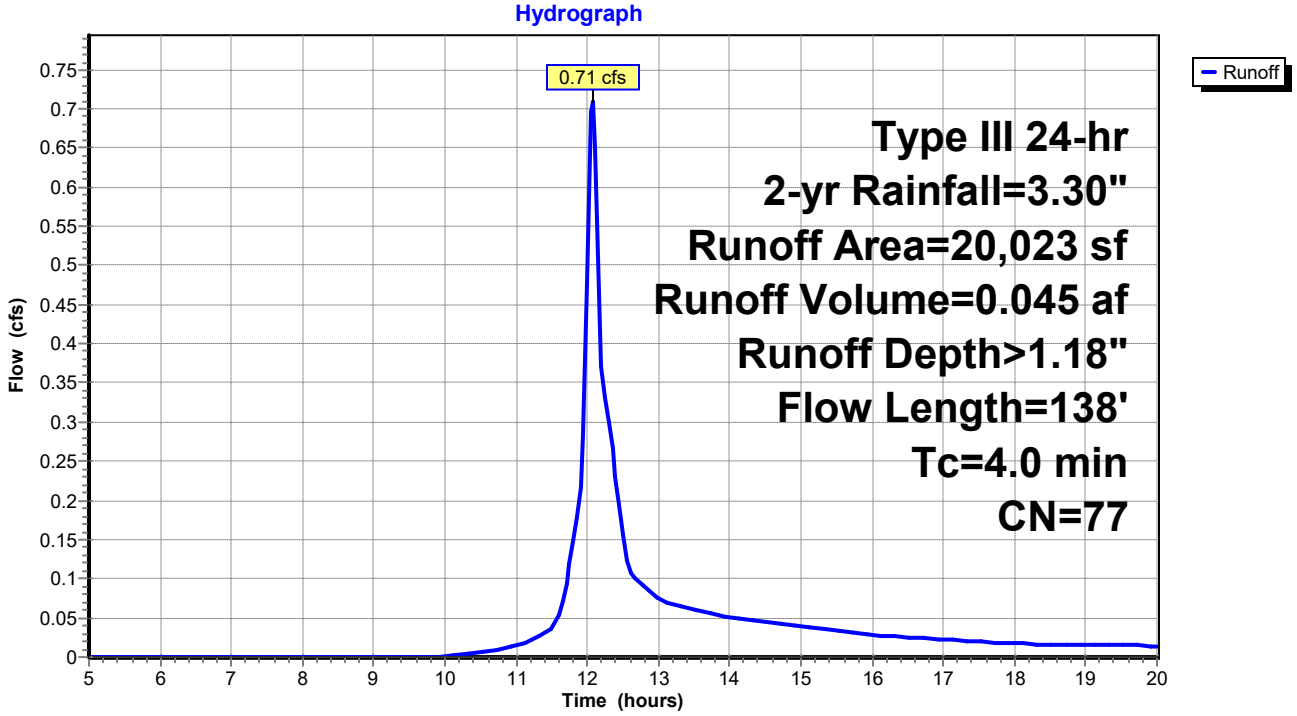

Summary for Subcatchment 2S: Pre Subcatchment 2

Runoff = 0.74 cfs @ 12.19 hrs, Volume= 0.062 af, Depth> 1.18"
Routed to Reach DP2 : Shoreline 2

Runoff by SCS TR-20 method, UH=SCS, Weighted-CN, Time Span= 5.00-20.00 hrs, dt= 0.05 hrs
Type III 24-hr 2-yr Rainfall=3.30"

Area (sf)	CN	Description
27,744	77	Woods, Good, HSG D
27,744		100.00% Pervious Area

Tc (min)	Length (feet)	Slope (ft/ft)	Velocity (ft/sec)	Capacity (cfs)	Description
12.3	148	0.1689	0.20		**Sheet Flow, Tc-1** Woods: Light underbrush n= 0.400 P2= 3.30"
0.4	50	0.1800	2.12		**Shallow Concentrated Flow, Tc-2** Woodland Kv= 5.0 fps
12.7	198	Total			

Subcatchment 2S: Pre Subcatchment 2

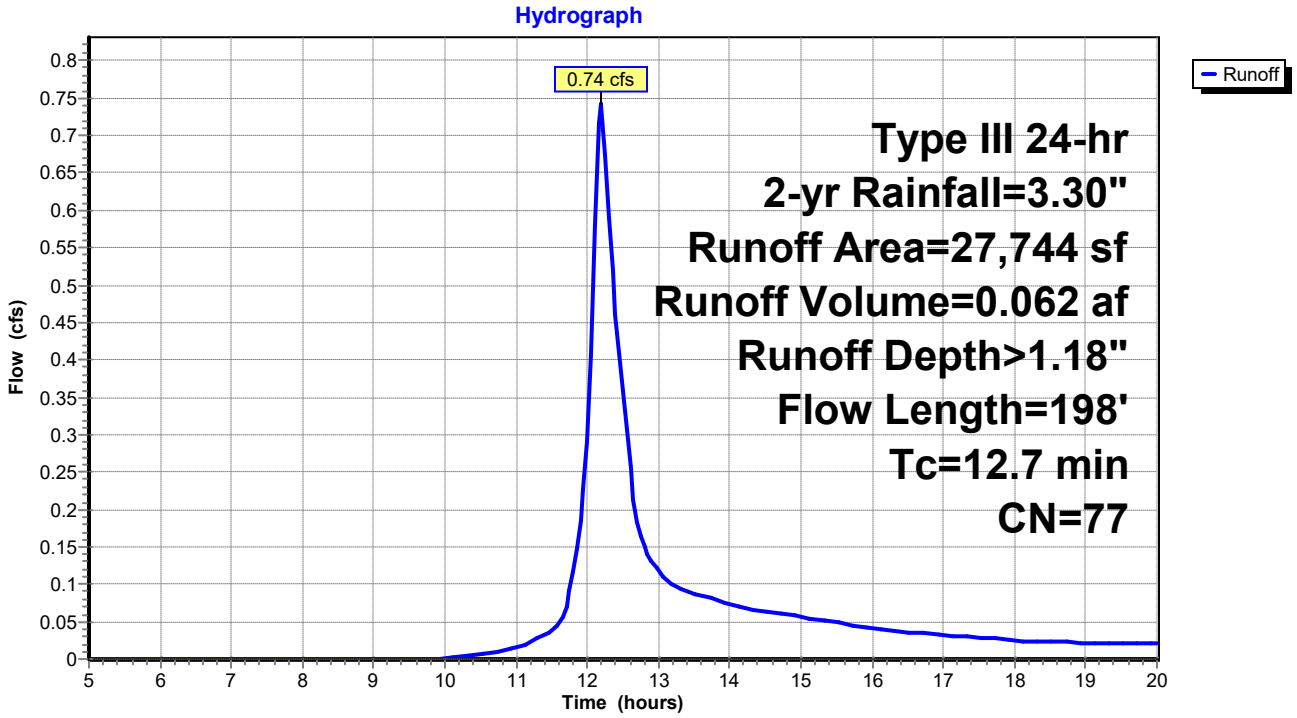

Summary for Subcatchment 3S: Pre Subcatchment 3

Runoff = 2.39 cfs @ 12.11 hrs, Volume= 0.166 af, Depth> 1.37"
Routed to Reach DP3 : Shoreline 3

Runoff by SCS TR-20 method, UH=SCS, Weighted-CN, Time Span= 5.00-20.00 hrs, dt= 0.05 hrs
Type III 24-hr 2-yr Rainfall=3.30"

	Area (sf)	CN	Description
	51,121	77	Woods, Good, HSG D
	751	98	Roofs, HSG D
	4,795	96	Gravel surface, HSG D
*	6,955	88	Sand Beach, HSG D
	63,622	80	Weighted Average
	62,871		98.82% Pervious Area
	751		1.18% Impervious Area

Tc (min)	Length (feet)	Slope (ft/ft)	Velocity (ft/sec)	Capacity (cfs)	Description
2.7	23	0.1740	0.14		**Sheet Flow, Tc-1** Woods: Light underbrush n= 0.400 P2= 3.30"
1.0	70	0.0571	1.19		**Shallow Concentrated Flow, Tc-2** Woodland Kv= 5.0 fps
0.5	170	0.1059	5.24		**Shallow Concentrated Flow, Tc-3** Unpaved Kv= 16.1 fps
2.5	140	0.0357	0.94		**Shallow Concentrated Flow, Tc-4** Woodland Kv= 5.0 fps
0.3	42	0.0714	2.67		**Shallow Concentrated Flow, Tc-4** Nearly Bare & Untilled Kv= 10.0 fps
7.0	445	Total			

Subcatchment 3S: Pre Subcatchment 3

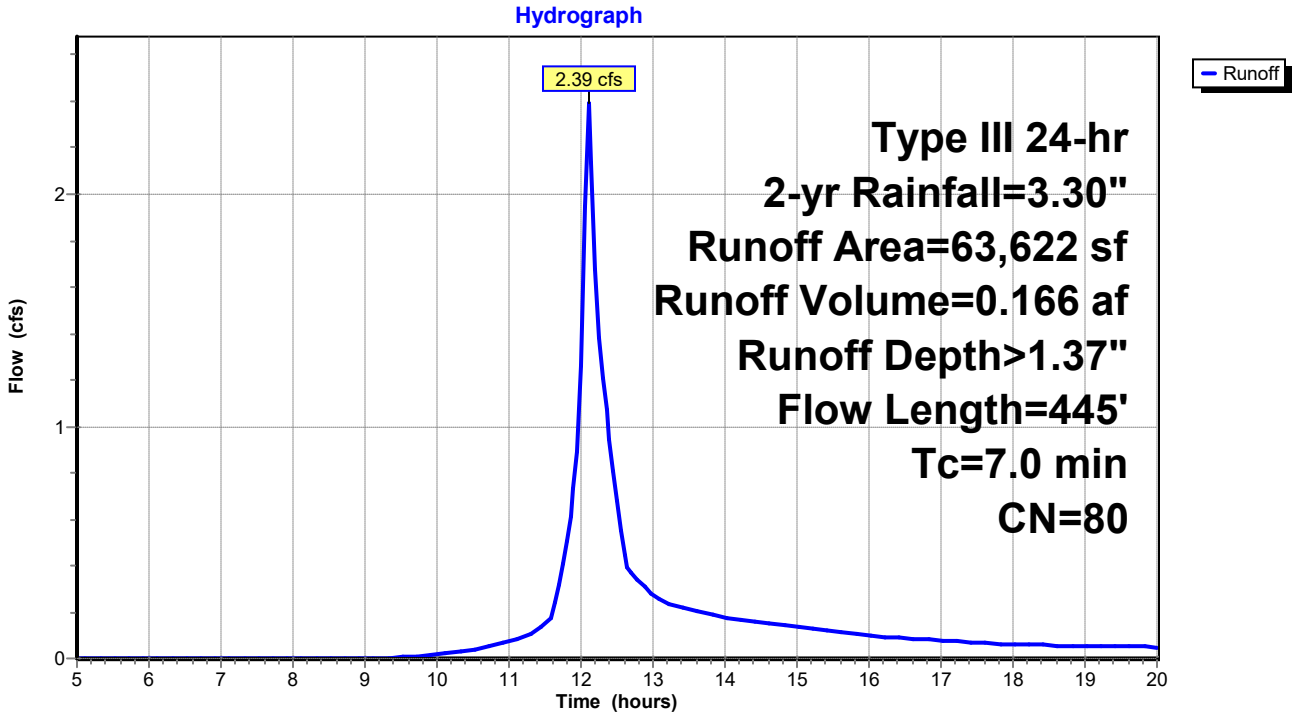

Summary for Reach DP1: Shoreline 1

Inflow Area = 0.460 ac, 0.00% Impervious, Inflow Depth > 1.18" for 2-yr event
Inflow = 0.71 cfs @ 12.07 hrs, Volume= 0.045 af
Outflow = 0.71 cfs @ 12.07 hrs, Volume= 0.045 af, Atten= 0%, Lag= 0.0 min
Routed to Reach SP1 : SACO RIVER / OCEAN

Routing by Stor-Ind+Trans method, Time Span= 5.00-20.00 hrs, dt= 0.05 hrs

Reach DP1: Shoreline 1

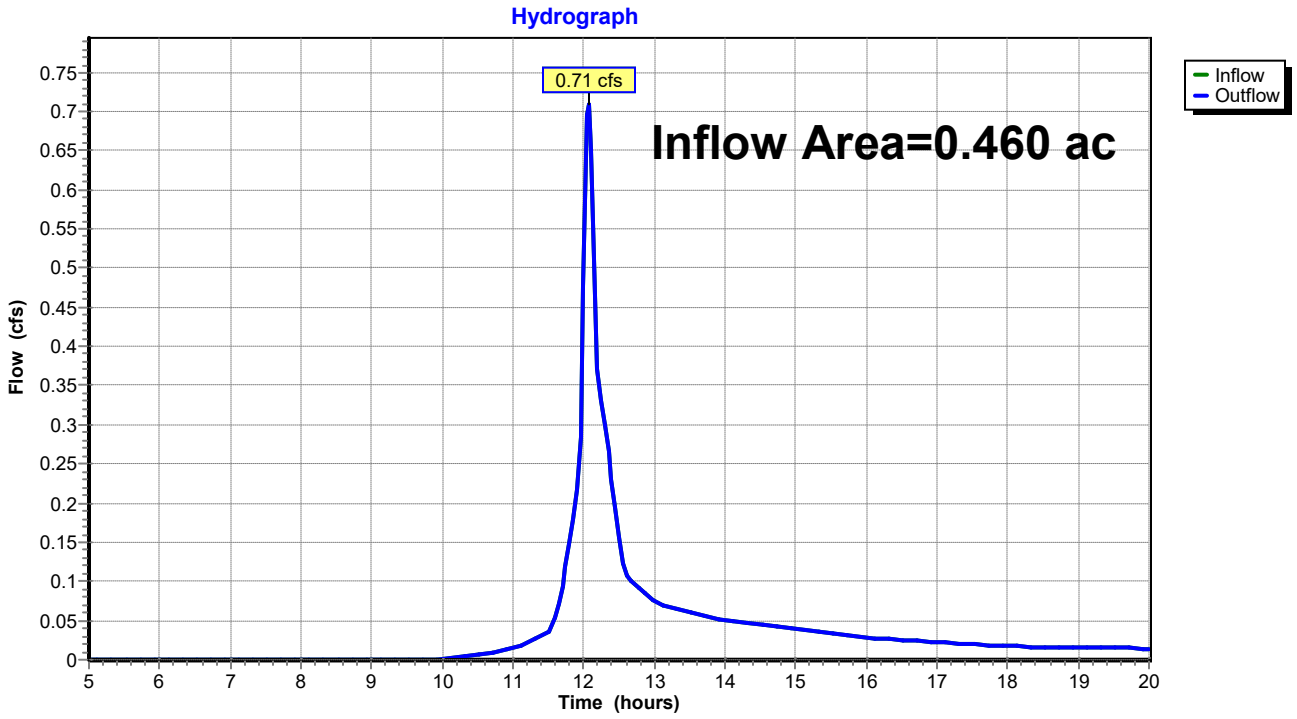

Summary for Reach DP2: Shoreline 2

Inflow Area = 0.637 ac, 0.00% Impervious, Inflow Depth > 1.18" for 2-yr event
Inflow = 0.74 cfs @ 12.19 hrs, Volume= 0.062 af
Outflow = 0.74 cfs @ 12.19 hrs, Volume= 0.062 af, Atten= 0%, Lag= 0.0 min
Routed to Reach SP1 : SACO RIVER / OCEAN

Routing by Stor-Ind+Trans method, Time Span= 5.00-20.00 hrs, dt= 0.05 hrs

Reach DP2: Shoreline 2

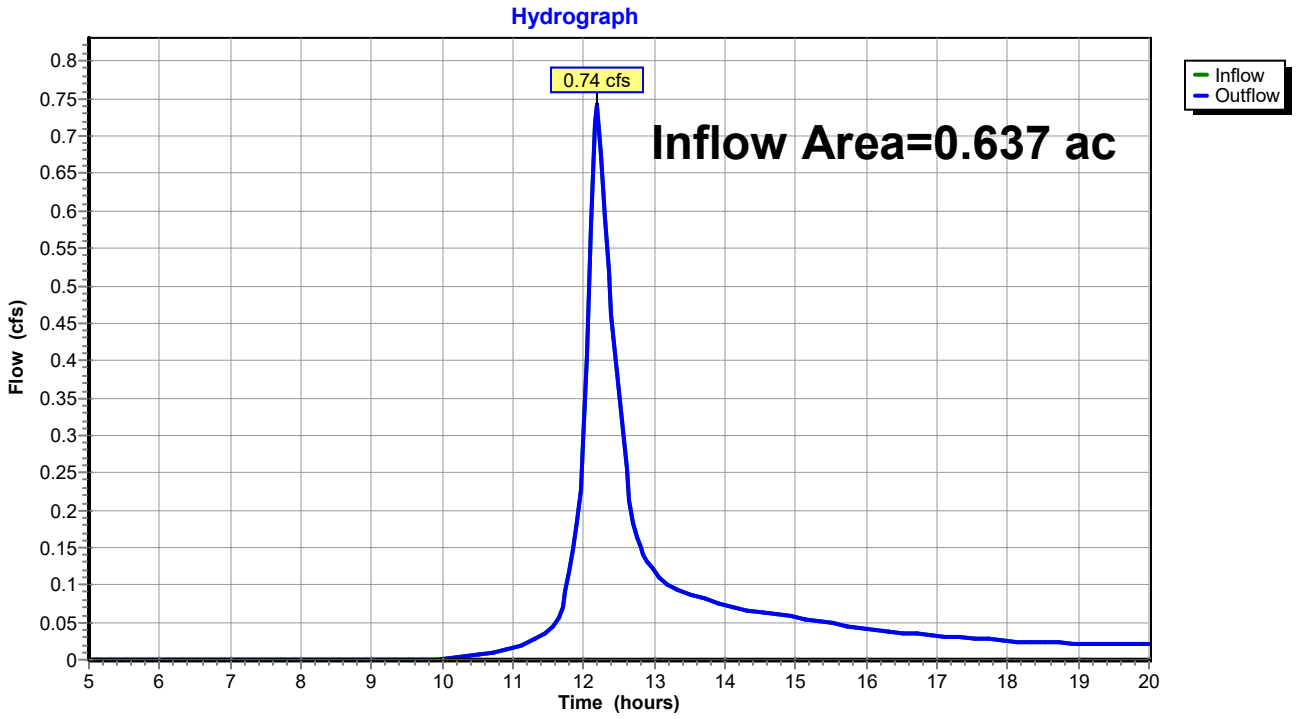

Summary for Reach DP3: Shoreline 3

Inflow Area = 1.461 ac, 1.18% Impervious, Inflow Depth > 1.37" for 2-yr event
Inflow = 2.39 cfs @ 12.11 hrs, Volume= 0.166 af
Outflow = 2.39 cfs @ 12.11 hrs, Volume= 0.166 af, Atten= 0%, Lag= 0.0 min
Routed to Reach SP1 : SACO RIVER / OCEAN

Routing by Stor-Ind+Trans method, Time Span= 5.00-20.00 hrs, dt= 0.05 hrs

Reach DP3: Shoreline 3

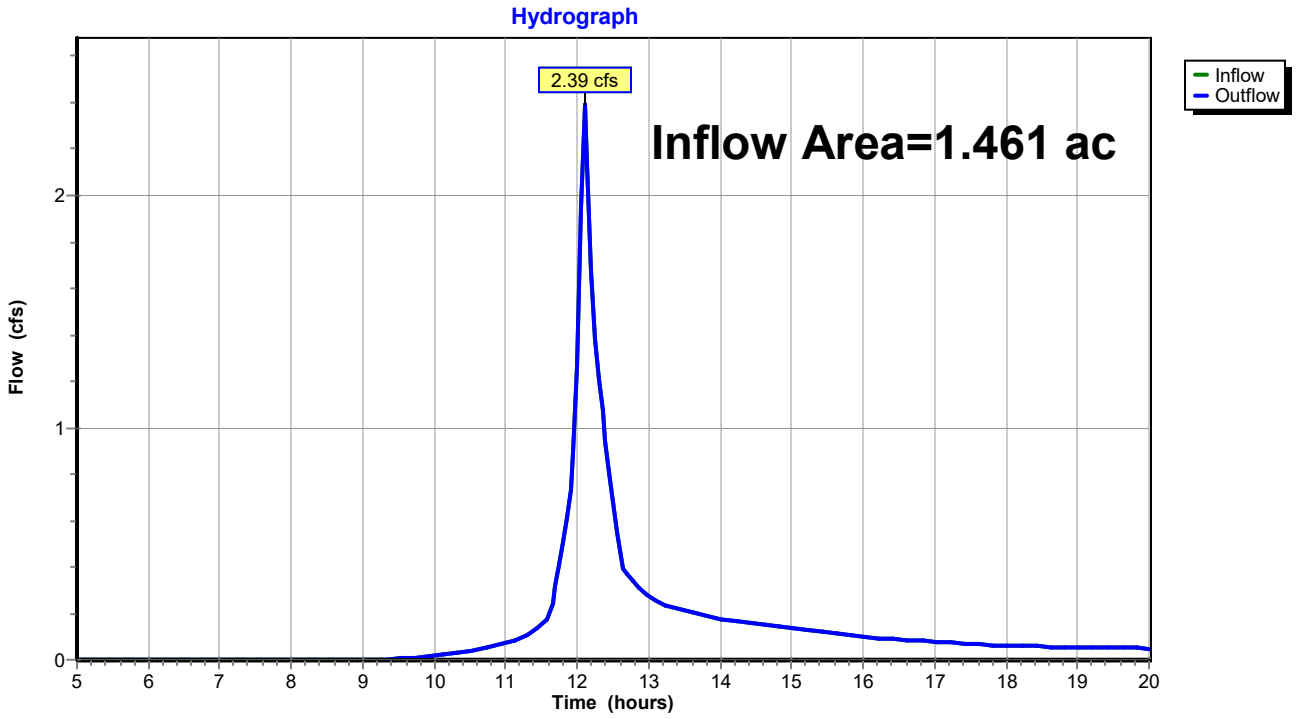

Summary for Reach SP1: SACO RIVER / OCEAN

Inflow Area = 2.557 ac, 0.67% Impervious, Inflow Depth > 1.29" for 2-yr event
Inflow = 3.63 cfs @ 12.11 hrs, Volume= 0.274 af
Outflow = 3.63 cfs @ 12.11 hrs, Volume= 0.274 af, Atten= 0%, Lag= 0.0 min

Routing by Stor-Ind+Trans method, Time Span= 5.00-20.00 hrs, dt= 0.05 hrs

Reach SP1: SACO RIVER / OCEAN

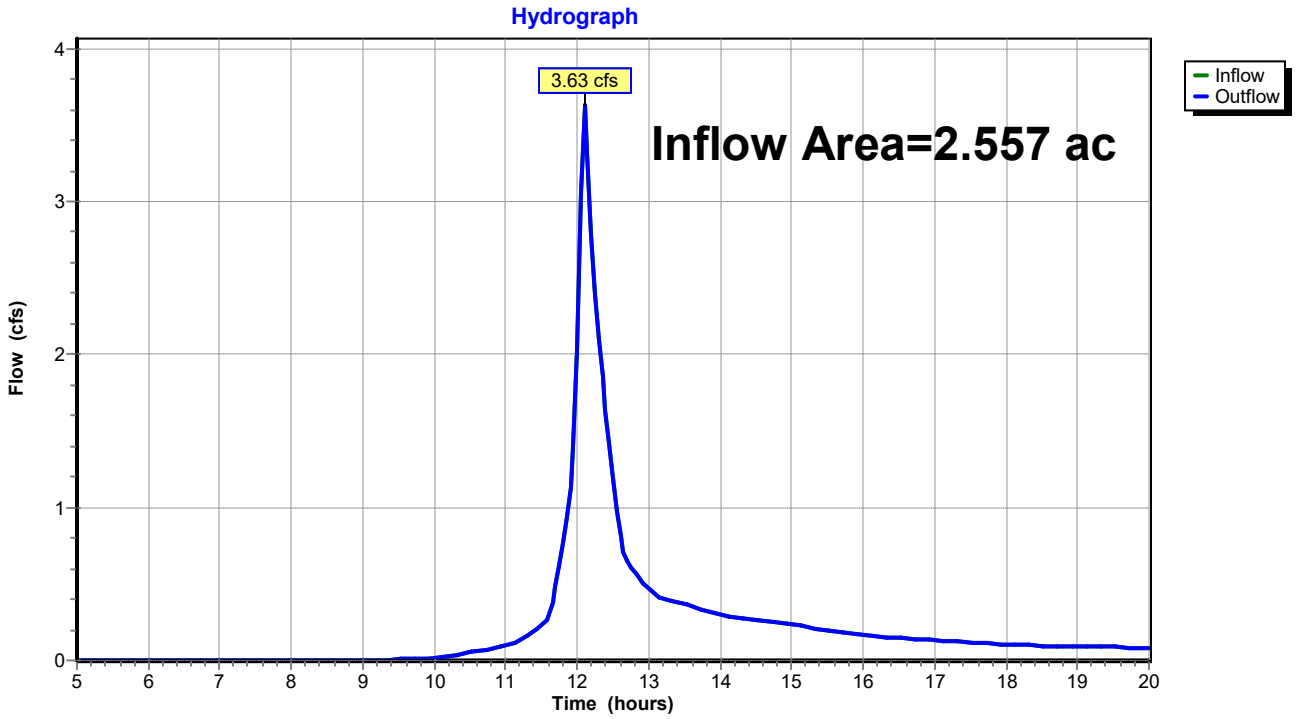

Time span=5.00-20.00 hrs, dt=0.05 hrs, 301 points
Runoff by SCS TR-20 method, UH=SCS, Weighted-CN
Reach routing by Stor-Ind+Trans method - Pond routing by Stor-Ind method

Subcatchment 1S: Pre Subcatchment 1 Runoff Area=20,023 sf 0.00% Impervious Runoff Depth>2.36"
Flow Length=138' Tc=4.0 min CN=77 Runoff=1.44 cfs 0.091 af

Subcatchment 2S: Pre Subcatchment 2 Runoff Area=27,744 sf 0.00% Impervious Runoff Depth>2.36"
Flow Length=198' Tc=12.7 min CN=77 Runoff=1.51 cfs 0.125 af

Subcatchment 3S: Pre Subcatchment 3 Runoff Area=63,622 sf 1.18% Impervious Runoff Depth>2.62"
Flow Length=445' Tc=7.0 min CN=80 Runoff=4.58 cfs 0.319 af

Reach DP1: Shoreline 1 Inflow=1.44 cfs 0.091 af
Outflow=1.44 cfs 0.091 af

Reach DP2: Shoreline 2 Inflow=1.51 cfs 0.125 af
Outflow=1.51 cfs 0.125 af

Reach DP3: Shoreline 3 Inflow=4.58 cfs 0.319 af
Outflow=4.58 cfs 0.319 af

Reach SP1: SACO RIVER / OCEAN Inflow=7.10 cfs 0.534 af
Outflow=7.10 cfs 0.534 af

Total Runoff Area = 2.557 ac Runoff Volume = 0.534 af Average Runoff Depth = 2.51"
99.33% Pervious = 2.540 ac 0.67% Impervious = 0.017 ac

Summary for Subcatchment 1S: Pre Subcatchment 1

Runoff = 1.44 cfs @ 12.06 hrs, Volume= 0.091 af, Depth> 2.36"
Routed to Reach DP1 : Shoreline 1

Runoff by SCS TR-20 method, UH=SCS, Weighted-CN, Time Span= 5.00-20.00 hrs, dt= 0.05 hrs
Type III 24-hr 10-yr Rainfall=4.90"

Area (sf)	CN	Description
20,023	77	Woods, Good, HSG D
20,023		100.00% Pervious Area

Tc (min)	Length (feet)	Slope (ft/ft)	Velocity (ft/sec)	Capacity (cfs)	Description
3.1	20	0.1000	0.11		**Sheet Flow, Tc-1** Woods: Light underbrush n= 0.400 P2= 3.30"
0.9	118	0.1780	2.11		**Shallow Concentrated Flow, Tc-2** Woodland Kv= 5.0 fps
4.0	138	Total			

Subcatchment 1S: Pre Subcatchment 1

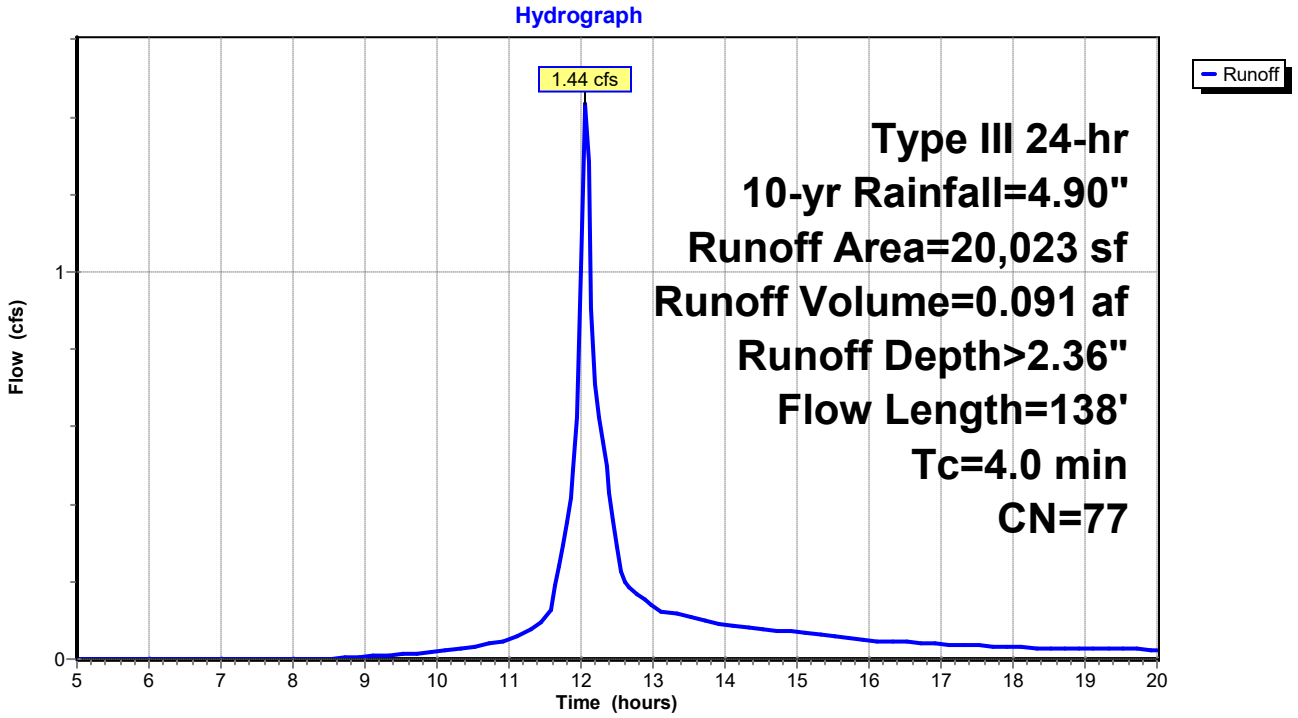

Summary for Subcatchment 2S: Pre Subcatchment 2

Runoff = 1.51 cfs @ 12.18 hrs, Volume= 0.125 af, Depth> 2.36"
Routed to Reach DP2 : Shoreline 2

Runoff by SCS TR-20 method, UH=SCS, Weighted-CN, Time Span= 5.00-20.00 hrs, dt= 0.05 hrs
Type III 24-hr 10-yr Rainfall=4.90"

Area (sf)	CN	Description
27,744	77	Woods, Good, HSG D
27,744		100.00% Pervious Area

Tc (min)	Length (feet)	Slope (ft/ft)	Velocity (ft/sec)	Capacity (cfs)	Description
12.3	148	0.1689	0.20		**Sheet Flow, Tc-1** Woods: Light underbrush n= 0.400 P2= 3.30"
0.4	50	0.1800	2.12		**Shallow Concentrated Flow, Tc-2** Woodland Kv= 5.0 fps
12.7	198	Total			

Subcatchment 2S: Pre Subcatchment 2

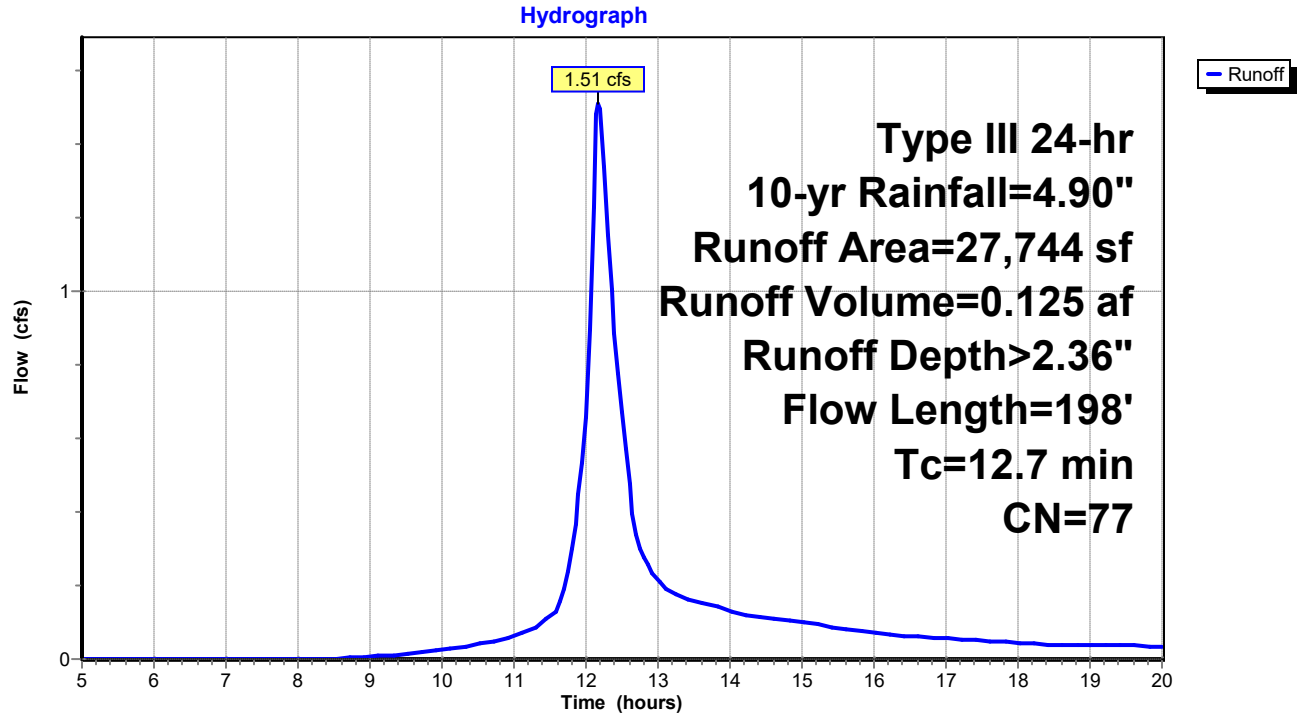

Summary for Subcatchment 3S: Pre Subcatchment 3

Runoff = 4.58 cfs @ 12.10 hrs, Volume= 0.319 af, Depth> 2.62"
Routed to Reach DP3 : Shoreline 3

Runoff by SCS TR-20 method, UH=SCS, Weighted-CN, Time Span= 5.00-20.00 hrs, dt= 0.05 hrs
Type III 24-hr 10-yr Rainfall=4.90"

	Area (sf)	CN	Description
	51,121	77	Woods, Good, HSG D
	751	98	Roofs, HSG D
	4,795	96	Gravel surface, HSG D
*	6,955	88	Sand Beach, HSG D
	63,622	80	Weighted Average
	62,871		98.82% Pervious Area
	751		1.18% Impervious Area

Tc (min)	Length (feet)	Slope (ft/ft)	Velocity (ft/sec)	Capacity (cfs)	Description
2.7	23	0.1740	0.14		**Sheet Flow, Tc-1** Woods: Light underbrush n= 0.400 P2= 3.30"
1.0	70	0.0571	1.19		**Shallow Concentrated Flow, Tc-2** Woodland Kv= 5.0 fps
0.5	170	0.1059	5.24		**Shallow Concentrated Flow, Tc-3** Unpaved Kv= 16.1 fps
2.5	140	0.0357	0.94		**Shallow Concentrated Flow, Tc-4** Woodland Kv= 5.0 fps
0.3	42	0.0714	2.67		**Shallow Concentrated Flow, Tc-4** Nearly Bare & Untilled Kv= 10.0 fps
7.0	445	Total			

Subcatchment 3S: Pre Subcatchment 3

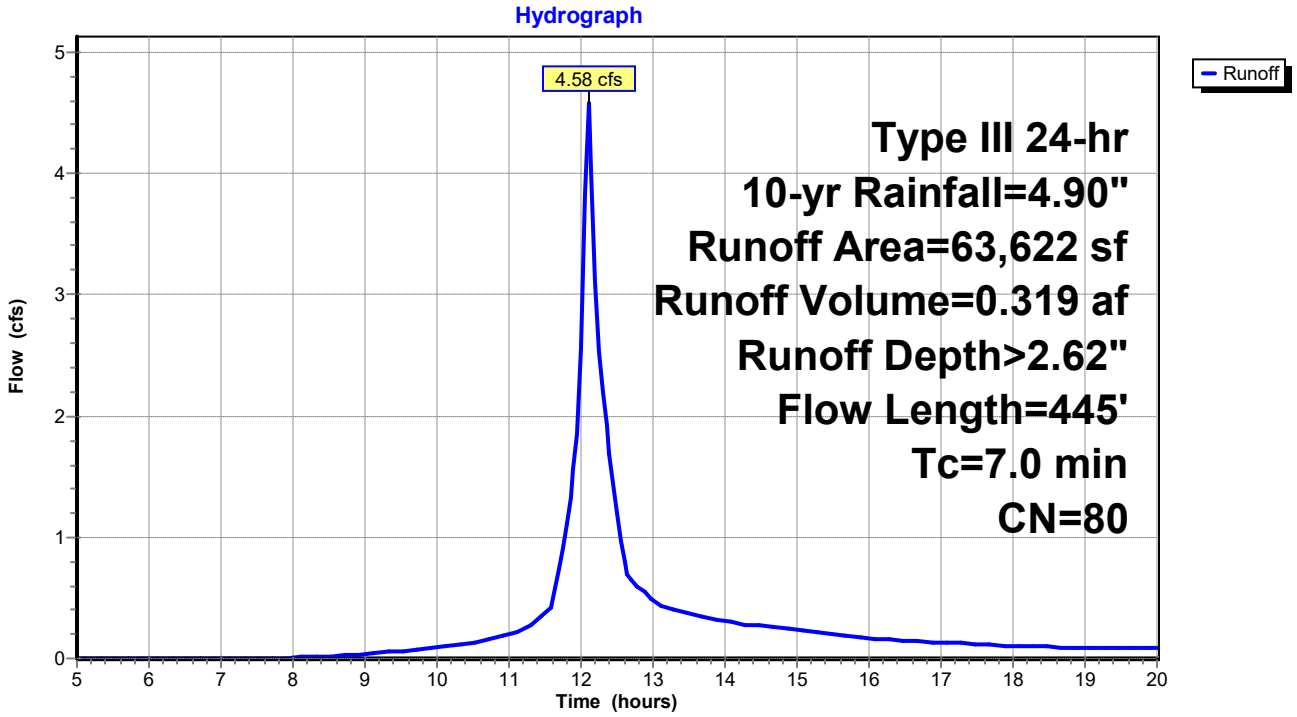

Summary for Reach DP1: Shoreline 1

Inflow Area = 0.460 ac, 0.00% Impervious, Inflow Depth > 2.36" for 10-yr event
Inflow = 1.44 cfs @ 12.06 hrs, Volume= 0.091 af
Outflow = 1.44 cfs @ 12.06 hrs, Volume= 0.091 af, Atten= 0%, Lag= 0.0 min
Routed to Reach SP1 : SACO RIVER / OCEAN

Routing by Stor-Ind+Trans method, Time Span= 5.00-20.00 hrs, dt= 0.05 hrs

Reach DP1: Shoreline 1

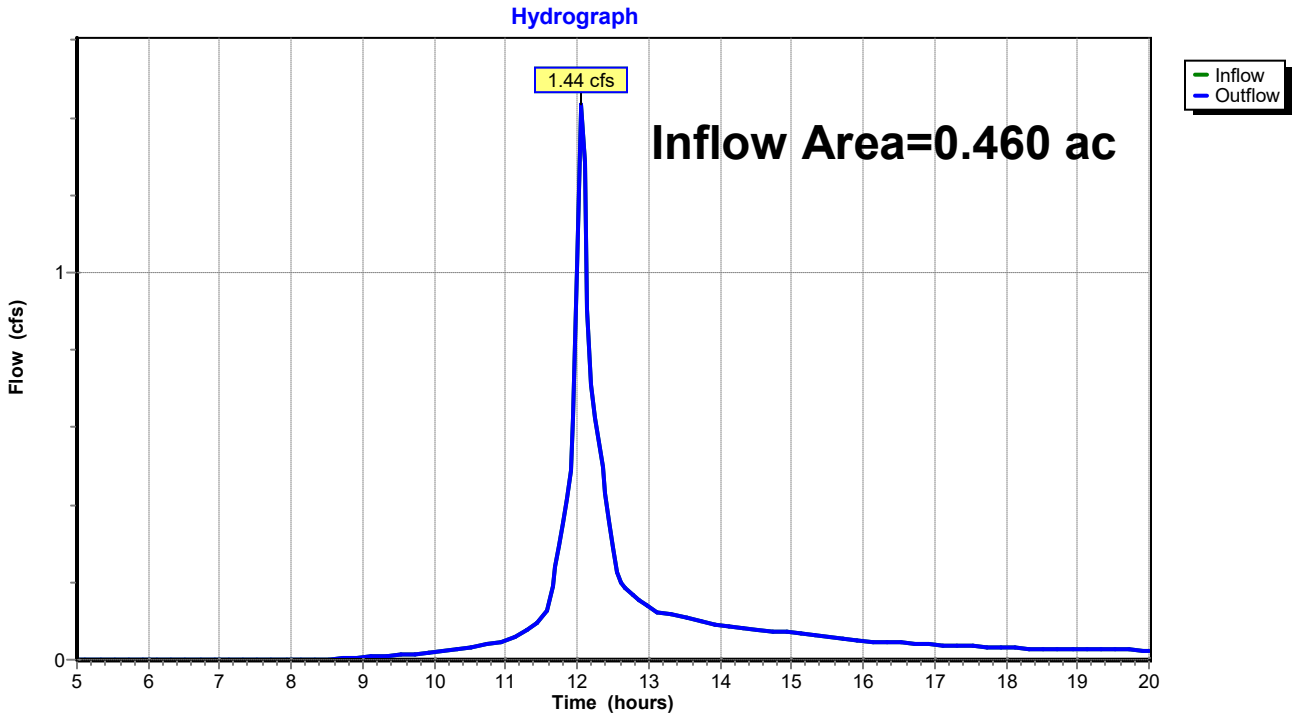

Summary for Reach DP2: Shoreline 2

Inflow Area = 0.637 ac, 0.00% Impervious, Inflow Depth > 2.36" for 10-yr event
Inflow = 1.51 cfs @ 12.18 hrs, Volume= 0.125 af
Outflow = 1.51 cfs @ 12.18 hrs, Volume= 0.125 af, Atten= 0%, Lag= 0.0 min
Routed to Reach SP1 : SACO RIVER / OCEAN

Routing by Stor-Ind+Trans method, Time Span= 5.00-20.00 hrs, dt= 0.05 hrs

Reach DP2: Shoreline 2

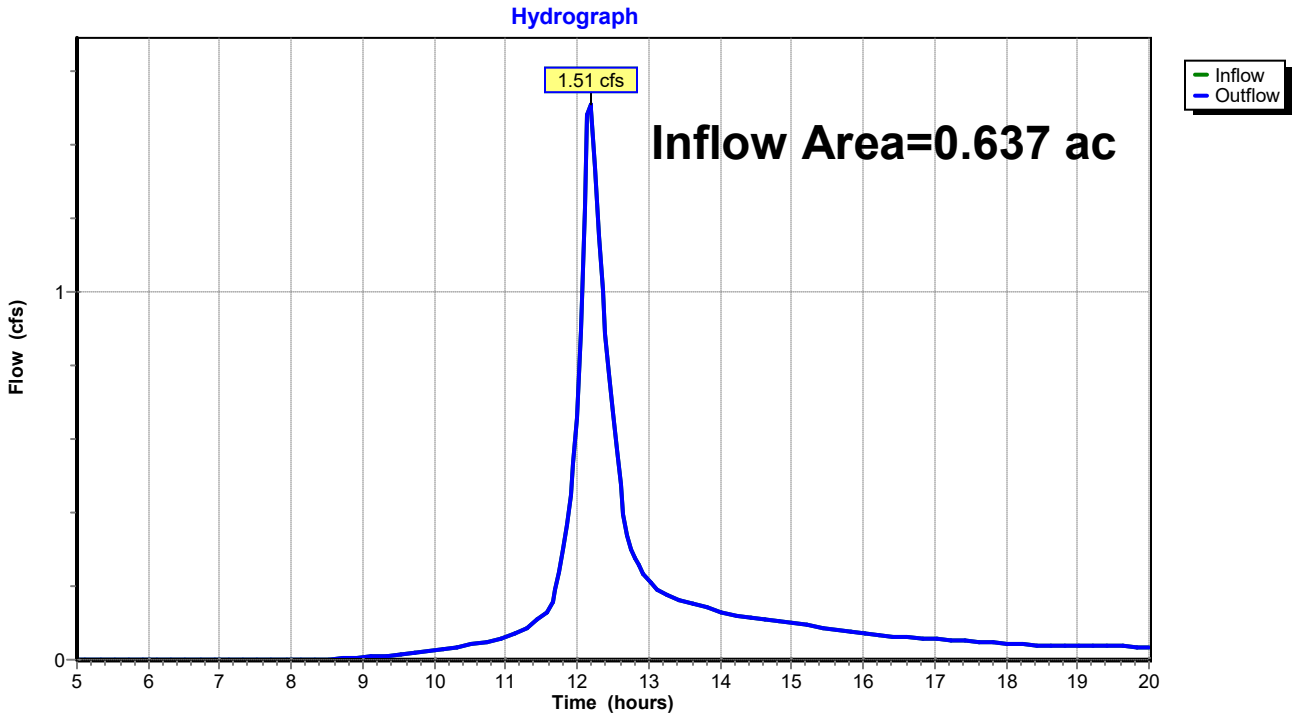

Summary for Reach DP3: Shoreline 3

Inflow Area = 1.461 ac, 1.18% Impervious, Inflow Depth > 2.62" for 10-yr event
Inflow = 4.58 cfs @ 12.10 hrs, Volume= 0.319 af
Outflow = 4.58 cfs @ 12.10 hrs, Volume= 0.319 af, Atten= 0%, Lag= 0.0 min
Routed to Reach SP1 : SACO RIVER / OCEAN

Routing by Stor-Ind+Trans method, Time Span= 5.00-20.00 hrs, dt= 0.05 hrs

Reach DP3: Shoreline 3

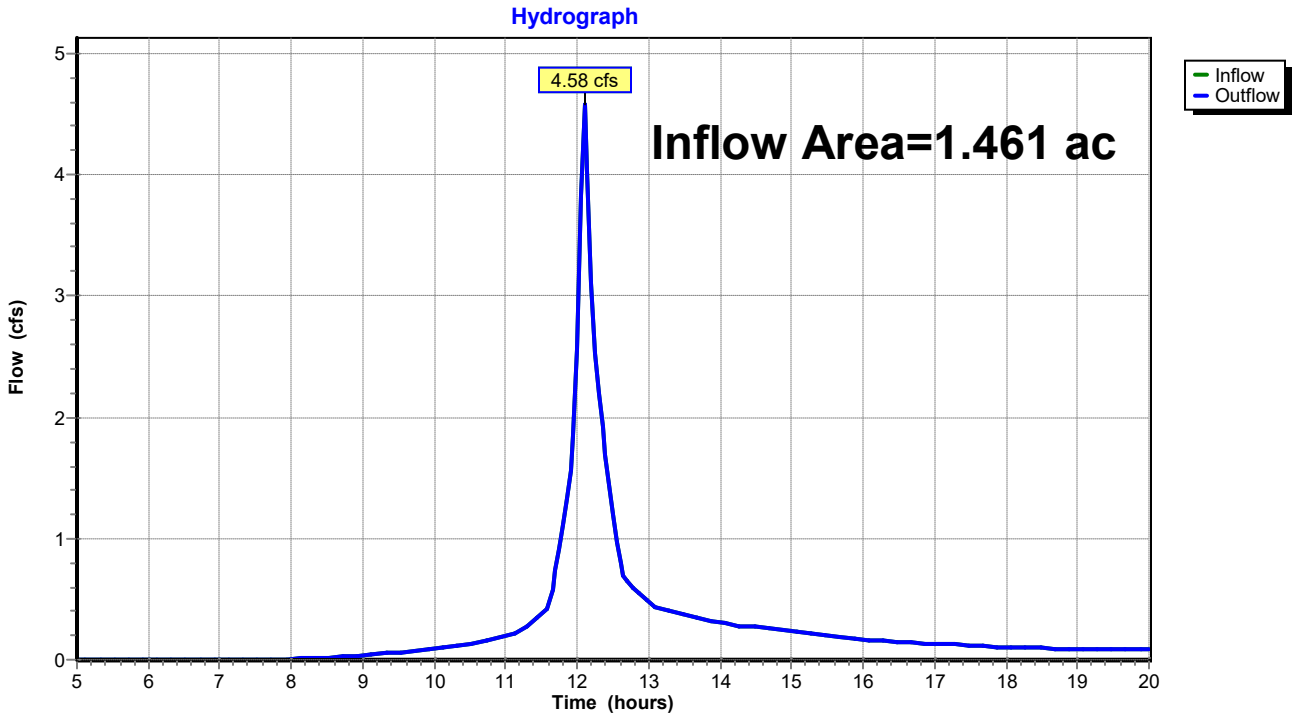

Summary for Reach SP1: SACO RIVER / OCEAN

Inflow Area = 2.557 ac, 0.67% Impervious, Inflow Depth > 2.51" for 10-yr event
Inflow = 7.10 cfs @ 12.10 hrs, Volume= 0.534 af
Outflow = 7.10 cfs @ 12.10 hrs, Volume= 0.534 af, Atten= 0%, Lag= 0.0 min

Routing by Stor-Ind+Trans method, Time Span= 5.00-20.00 hrs, dt= 0.05 hrs

Reach SP1: SACO RIVER / OCEAN

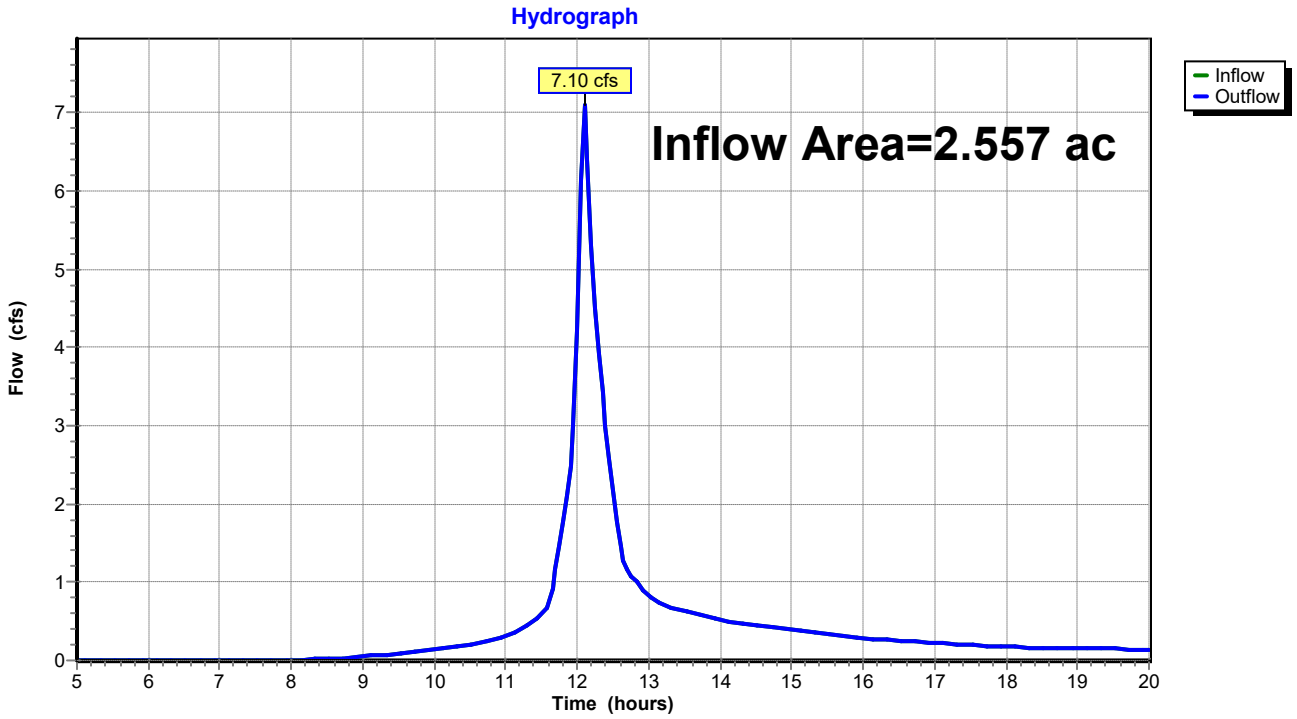

Time span=5.00-20.00 hrs, dt=0.05 hrs, 301 points
Runoff by SCS TR-20 method, UH=SCS, Weighted-CN
Reach routing by Stor-Ind+Trans method - Pond routing by Stor-Ind method

Subcatchment 1S: Pre Subcatchment 1 Runoff Area=20,023 sf 0.00% Impervious Runoff Depth>3.42"
Flow Length=138' Tc=4.0 min CN=77 Runoff=2.07 cfs 0.131 af

Subcatchment 2S: Pre Subcatchment 2 Runoff Area=27,744 sf 0.00% Impervious Runoff Depth>3.41"
Flow Length=198' Tc=12.7 min CN=77 Runoff=2.17 cfs 0.181 af

Subcatchment 3S: Pre Subcatchment 3 Runoff Area=63,622 sf 1.18% Impervious Runoff Depth>3.72"
Flow Length=445' Tc=7.0 min CN=80 Runoff=6.44 cfs 0.452 af

Reach DP1: Shoreline 1 Inflow=2.07 cfs 0.131 af
Outflow=2.07 cfs 0.131 af

Reach DP2: Shoreline 2 Inflow=2.17 cfs 0.181 af
Outflow=2.17 cfs 0.181 af

Reach DP3: Shoreline 3 Inflow=6.44 cfs 0.452 af
Outflow=6.44 cfs 0.452 af

Reach SP1: SACO RIVER / OCEAN Inflow=10.07 cfs 0.764 af
Outflow=10.07 cfs 0.764 af

Total Runoff Area = 2.557 ac Runoff Volume = 0.764 af Average Runoff Depth = 3.59"
99.33% Pervious = 2.540 ac 0.67% Impervious = 0.017 ac

Summary for Subcatchment 1S: Pre Subcatchment 1

Runoff = 2.07 cfs @ 12.06 hrs, Volume= 0.131 af, Depth> 3.42"
Routed to Reach DP1 : Shoreline 1

Runoff by SCS TR-20 method, UH=SCS, Weighted-CN, Time Span= 5.00-20.00 hrs, dt= 0.05 hrs
Type III 24-hr 25-yr Rainfall=6.20"

Area (sf)	CN	Description
20,023	77	Woods, Good, HSG D
20,023		100.00% Pervious Area

Tc (min)	Length (feet)	Slope (ft/ft)	Velocity (ft/sec)	Capacity (cfs)	Description
3.1	20	0.1000	0.11		**Sheet Flow, Tc-1** Woods: Light underbrush n= 0.400 P2= 3.30"
0.9	118	0.1780	2.11		**Shallow Concentrated Flow, Tc-2** Woodland Kv= 5.0 fps
4.0	138	Total			

Subcatchment 1S: Pre Subcatchment 1

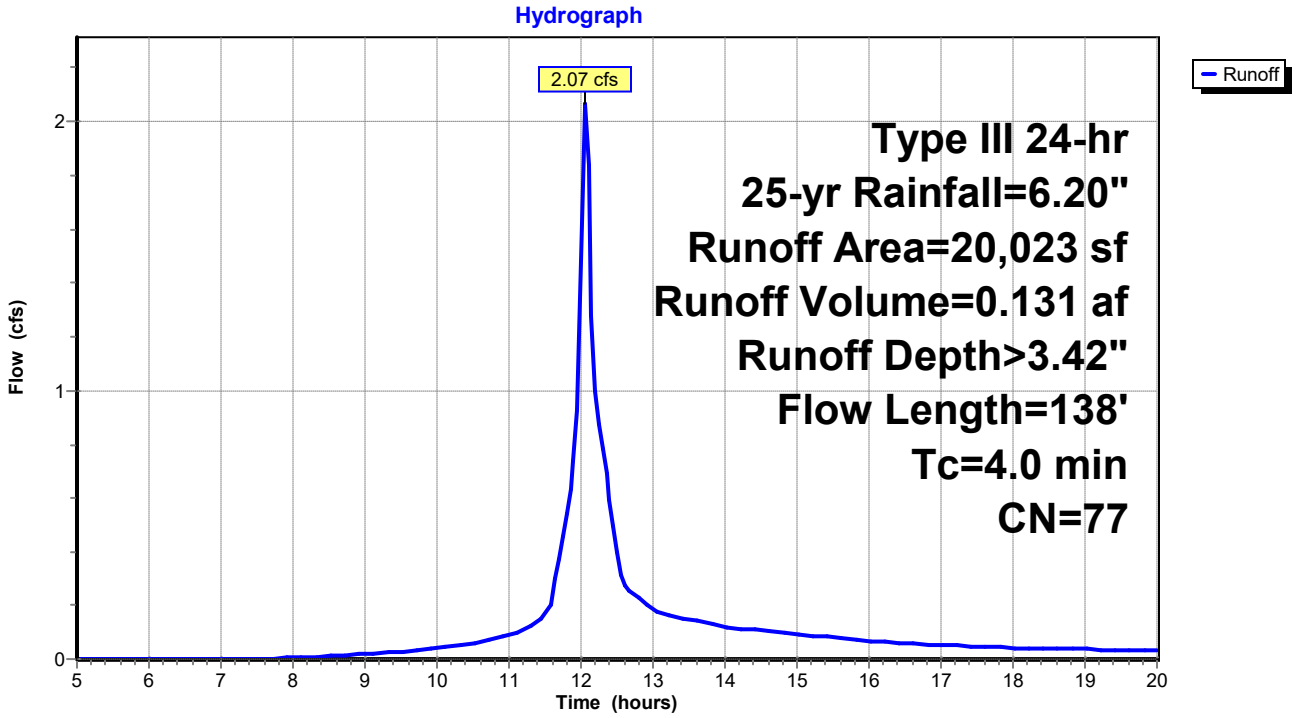

Summary for Subcatchment 2S: Pre Subcatchment 2

Runoff = 2.17 cfs @ 12.18 hrs, Volume= 0.181 af, Depth> 3.41"
Routed to Reach DP2 : Shoreline 2

Runoff by SCS TR-20 method, UH=SCS, Weighted-CN, Time Span= 5.00-20.00 hrs, dt= 0.05 hrs
Type III 24-hr 25-yr Rainfall=6.20"

Area (sf)	CN	Description
27,744	77	Woods, Good, HSG D
27,744		100.00% Pervious Area

Tc (min)	Length (feet)	Slope (ft/ft)	Velocity (ft/sec)	Capacity (cfs)	Description
12.3	148	0.1689	0.20		**Sheet Flow, Tc-1** Woods: Light underbrush n= 0.400 P2= 3.30"
0.4	50	0.1800	2.12		**Shallow Concentrated Flow, Tc-2** Woodland Kv= 5.0 fps
12.7	198	Total			

Subcatchment 2S: Pre Subcatchment 2

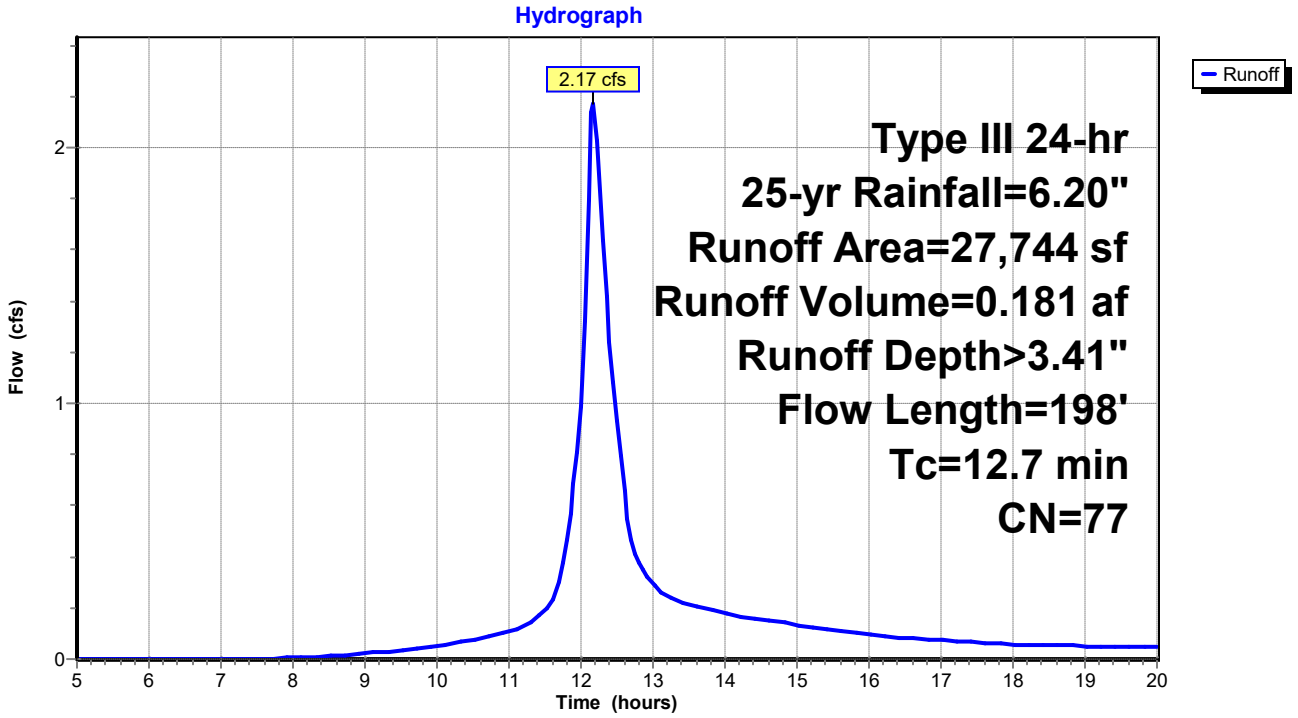

Summary for Subcatchment 3S: Pre Subcatchment 3

Runoff = 6.44 cfs @ 12.10 hrs, Volume= 0.452 af, Depth> 3.72"
Routed to Reach DP3 : Shoreline 3

Runoff by SCS TR-20 method, UH=SCS, Weighted-CN, Time Span= 5.00-20.00 hrs, dt= 0.05 hrs
Type III 24-hr 25-yr Rainfall=6.20"

	Area (sf)	CN	Description
	51,121	77	Woods, Good, HSG D
	751	98	Roofs, HSG D
	4,795	96	Gravel surface, HSG D
*	6,955	88	Sand Beach, HSG D
	63,622	80	Weighted Average
	62,871		98.82% Pervious Area
	751		1.18% Impervious Area

Tc (min)	Length (feet)	Slope (ft/ft)	Velocity (ft/sec)	Capacity (cfs)	Description
2.7	23	0.1740	0.14		**Sheet Flow, Tc-1** Woods: Light underbrush n= 0.400 P2= 3.30"
1.0	70	0.0571	1.19		**Shallow Concentrated Flow, Tc-2** Woodland Kv= 5.0 fps
0.5	170	0.1059	5.24		**Shallow Concentrated Flow, Tc-3** Unpaved Kv= 16.1 fps
2.5	140	0.0357	0.94		**Shallow Concentrated Flow, Tc-4** Woodland Kv= 5.0 fps
0.3	42	0.0714	2.67		**Shallow Concentrated Flow, Tc-4** Nearly Bare & Untilled Kv= 10.0 fps
7.0	445	Total			

Subcatchment 3S: Pre Subcatchment 3

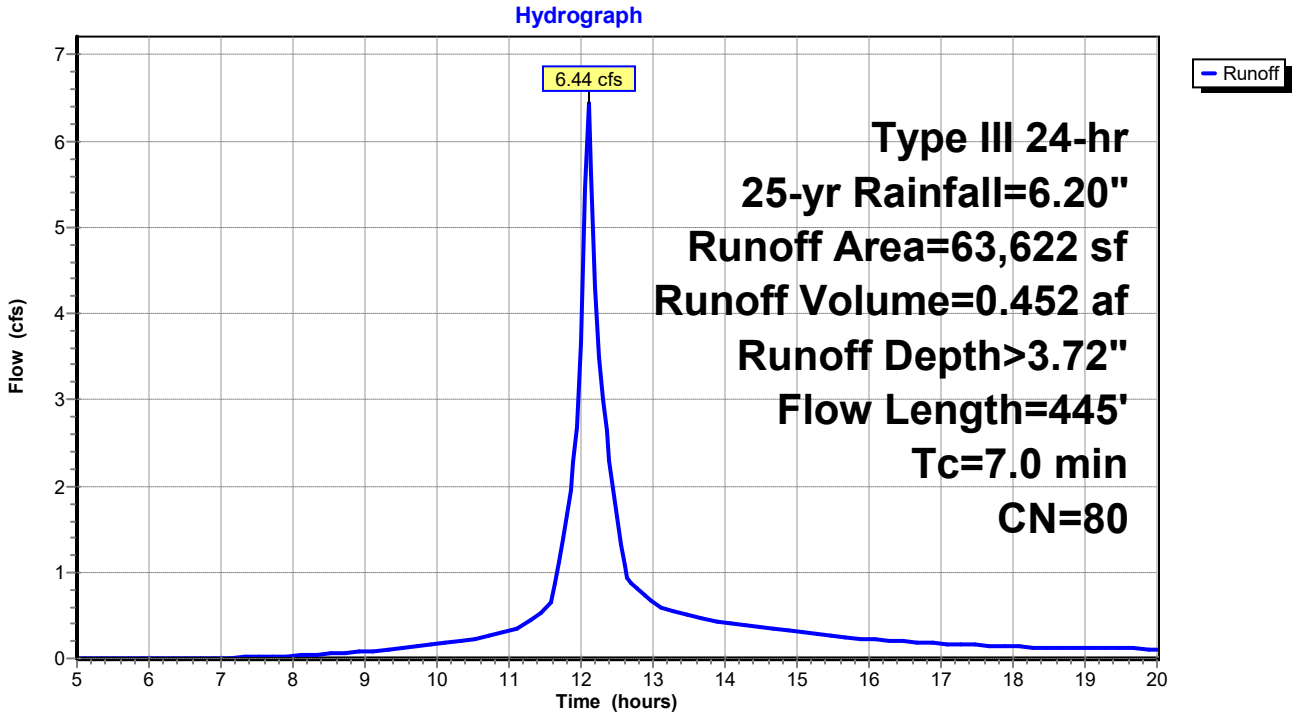

Summary for Reach DP1: Shoreline 1

Inflow Area = 0.460 ac, 0.00% Impervious, Inflow Depth > 3.42" for 25-yr event
Inflow = 2.07 cfs @ 12.06 hrs, Volume= 0.131 af
Outflow = 2.07 cfs @ 12.06 hrs, Volume= 0.131 af, Atten= 0%, Lag= 0.0 min
Routed to Reach SP1 : SACO RIVER / OCEAN

Routing by Stor-Ind+Trans method, Time Span= 5.00-20.00 hrs, dt= 0.05 hrs

Reach DP1: Shoreline 1

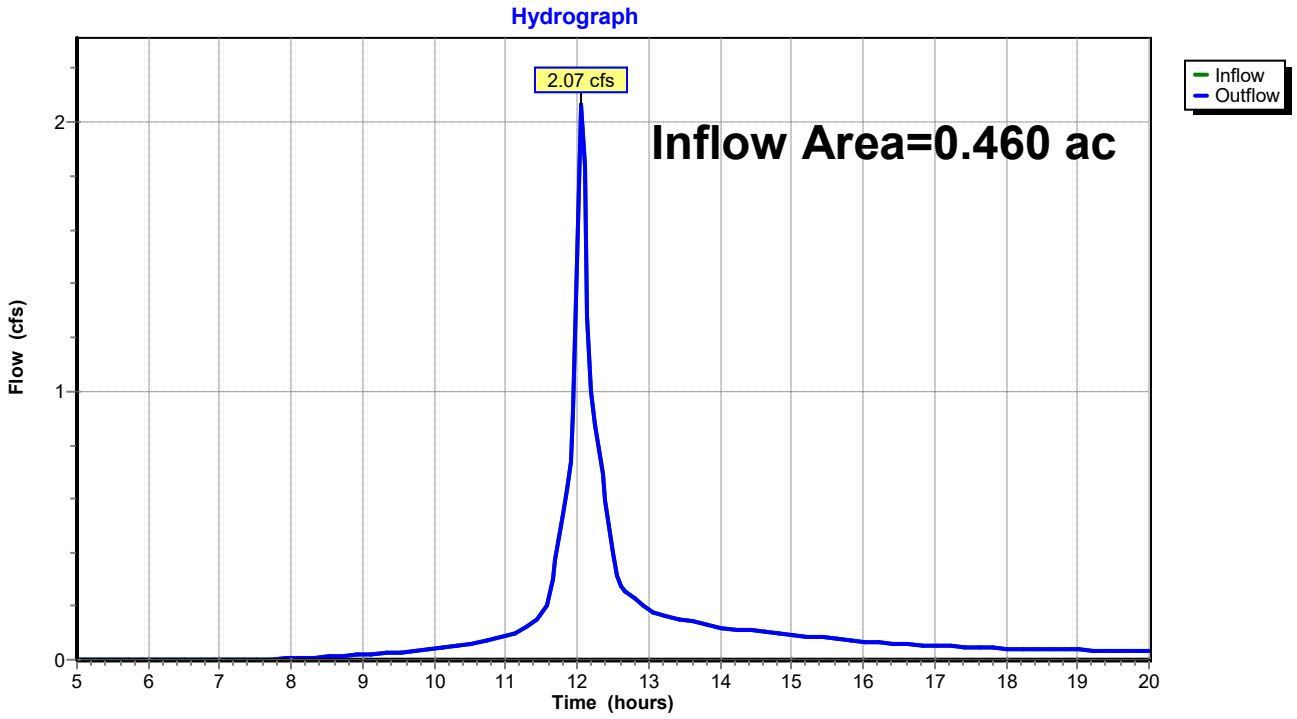

Summary for Reach DP2: Shoreline 2

Inflow Area = 0.637 ac, 0.00% Impervious, Inflow Depth > 3.41" for 25-yr event
Inflow = 2.17 cfs @ 12.18 hrs, Volume= 0.181 af
Outflow = 2.17 cfs @ 12.18 hrs, Volume= 0.181 af, Atten= 0%, Lag= 0.0 min
Routed to Reach SP1 : SACO RIVER / OCEAN

Routing by Stor-Ind+Trans method, Time Span= 5.00-20.00 hrs, dt= 0.05 hrs

Reach DP2: Shoreline 2

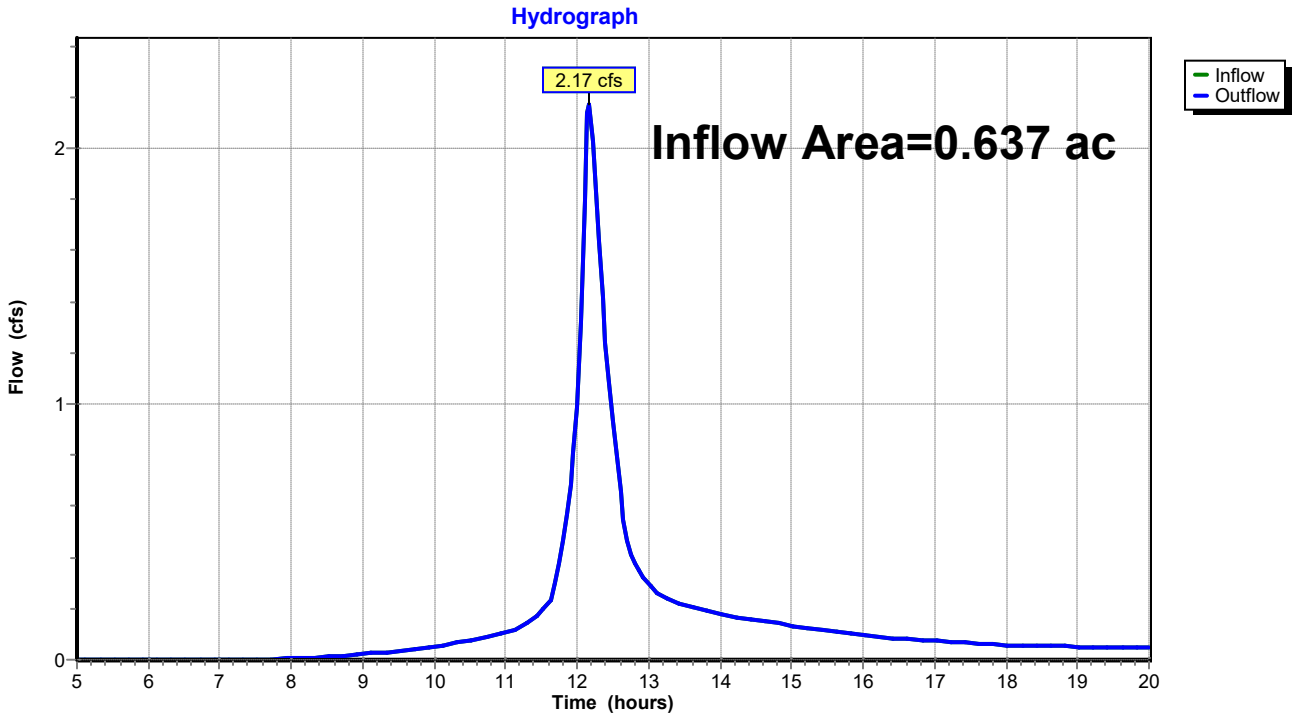

Summary for Reach DP3: Shoreline 3

Inflow Area = 1.461 ac, 1.18% Impervious, Inflow Depth > 3.72" for 25-yr event
Inflow = 6.44 cfs @ 12.10 hrs, Volume= 0.452 af
Outflow = 6.44 cfs @ 12.10 hrs, Volume= 0.452 af, Atten= 0%, Lag= 0.0 min
Routed to Reach SP1 : SACO RIVER / OCEAN

Routing by Stor-Ind+Trans method, Time Span= 5.00-20.00 hrs, dt= 0.05 hrs

Reach DP3: Shoreline 3

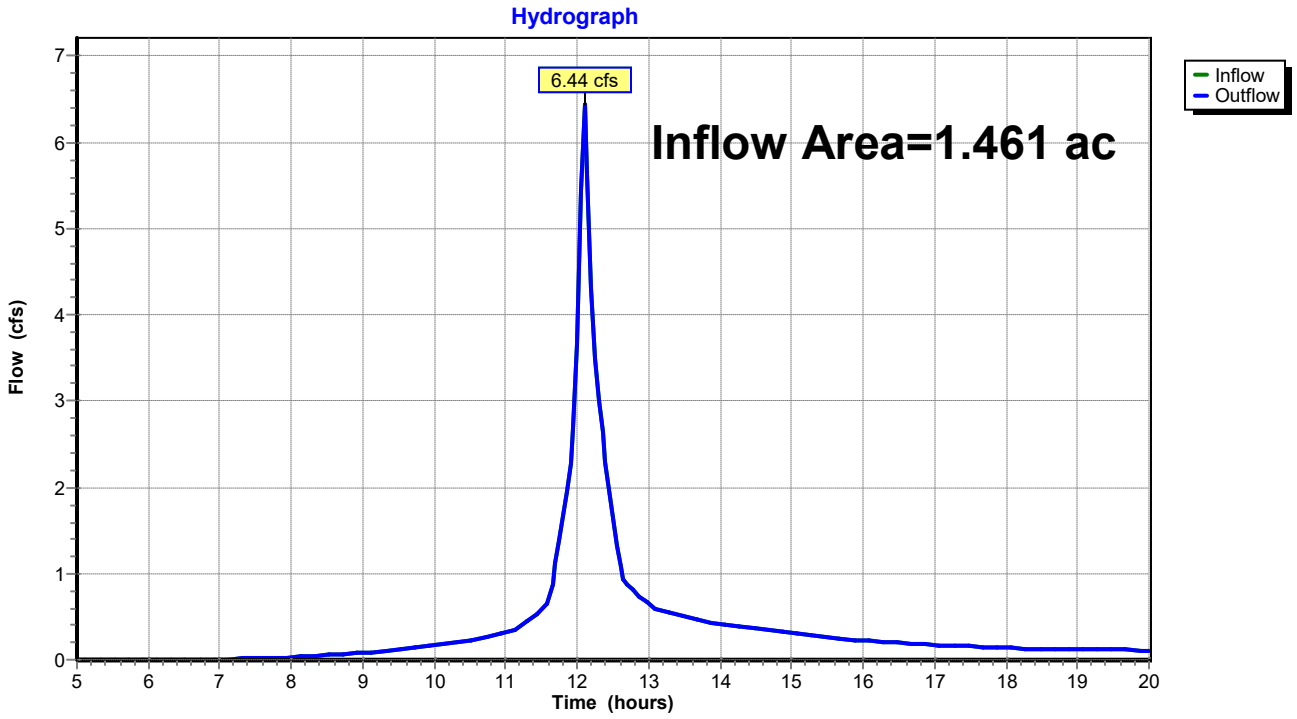

Summary for Reach SP1: SACO RIVER / OCEAN

Inflow Area = 2.557 ac, 0.67% Impervious, Inflow Depth > 3.59" for 25-yr event
Inflow = 10.07 cfs @ 12.10 hrs, Volume= 0.764 af
Outflow = 10.07 cfs @ 12.10 hrs, Volume= 0.764 af, Atten= 0%, Lag= 0.0 min

Routing by Stor-Ind+Trans method, Time Span= 5.00-20.00 hrs, dt= 0.05 hrs

Reach SP1: SACO RIVER / OCEAN

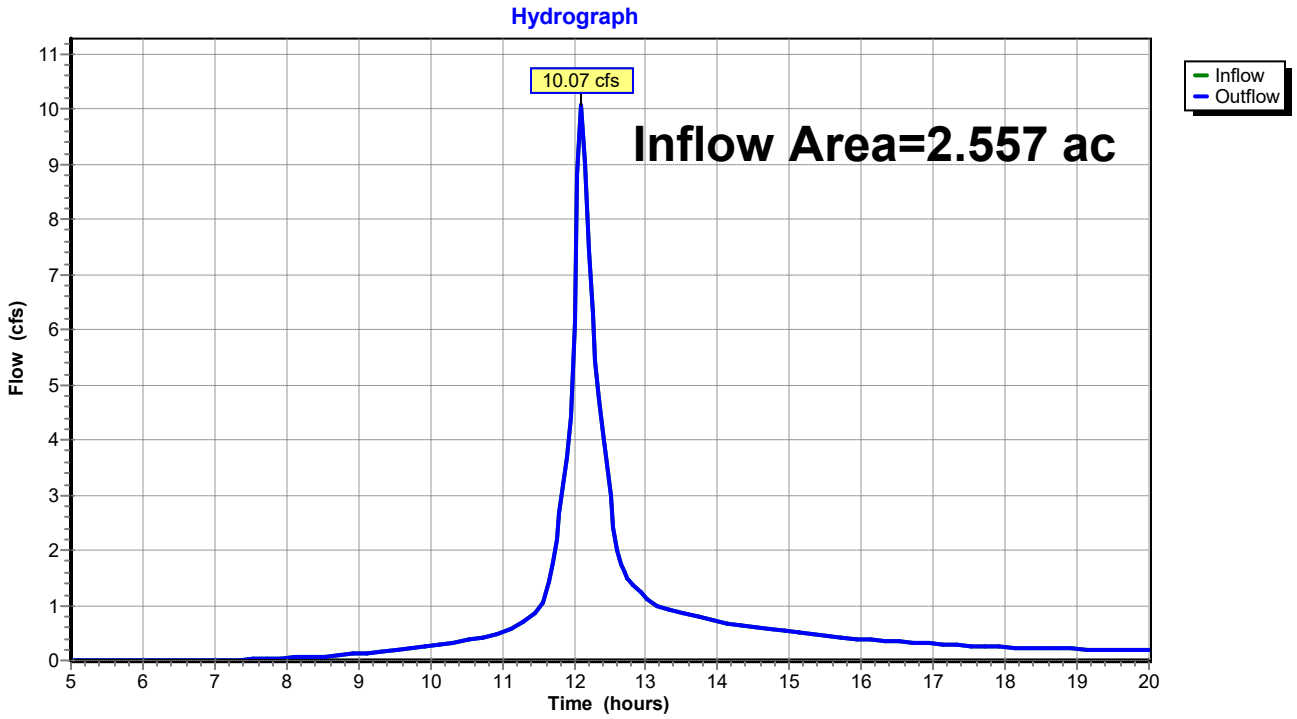

Time span=5.00-20.00 hrs, dt=0.05 hrs, 301 points
Runoff by SCS TR-20 method, UH=SCS, Weighted-CN
Reach routing by Stor-Ind+Trans method - Pond routing by Stor-Ind method

Subcatchment 1S: Pre Subcatchment 1 Runoff Area=20,023 sf 0.00% Impervious Runoff Depth>5.57"
Flow Length=138' Tc=4.0 min CN=77 Runoff=3.31 cfs 0.213 af

Subcatchment 2S: Pre Subcatchment 2 Runoff Area=27,744 sf 0.00% Impervious Runoff Depth>5.56"
Flow Length=198' Tc=12.7 min CN=77 Runoff=3.50 cfs 0.295 af

Subcatchment 3S: Pre Subcatchment 3 Runoff Area=63,622 sf 1.18% Impervious Runoff Depth>5.92"
Flow Length=445' Tc=7.0 min CN=80 Runoff=10.05 cfs 0.721 af

Reach DP1: Shoreline 1 Inflow=3.31 cfs 0.213 af
Outflow=3.31 cfs 0.213 af

Reach DP2: Shoreline 2 Inflow=3.50 cfs 0.295 af
Outflow=3.50 cfs 0.295 af

Reach DP3: Shoreline 3 Inflow=10.05 cfs 0.721 af
Outflow=10.05 cfs 0.721 af

Reach SP1: SACO RIVER / OCEAN Inflow=15.89 cfs 1.229 af
Outflow=15.89 cfs 1.229 af

Total Runoff Area = 2.557 ac Runoff Volume = 1.229 af Average Runoff Depth = 5.77"
99.33% Pervious = 2.540 ac 0.67% Impervious = 0.017 ac

Summary for Subcatchment 1S: Pre Subcatchment 1

Runoff = 3.31 cfs @ 12.06 hrs, Volume= 0.213 af, Depth> 5.57"
Routed to Reach DP1 : Shoreline 1

Runoff by SCS TR-20 method, UH=SCS, Weighted-CN, Time Span= 5.00-20.00 hrs, dt= 0.05 hrs
Type III 24-hr 100-yr Rainfall=8.70"

Area (sf)	CN	Description
20,023	77	Woods, Good, HSG D
20,023		100.00% Pervious Area

Tc (min)	Length (feet)	Slope (ft/ft)	Velocity (ft/sec)	Capacity (cfs)	Description
3.1	20	0.1000	0.11		**Sheet Flow, Tc-1** Woods: Light underbrush n= 0.400 P2= 3.30"
0.9	118	0.1780	2.11		**Shallow Concentrated Flow, Tc-2** Woodland Kv= 5.0 fps
4.0	138	Total			

Subcatchment 1S: Pre Subcatchment 1

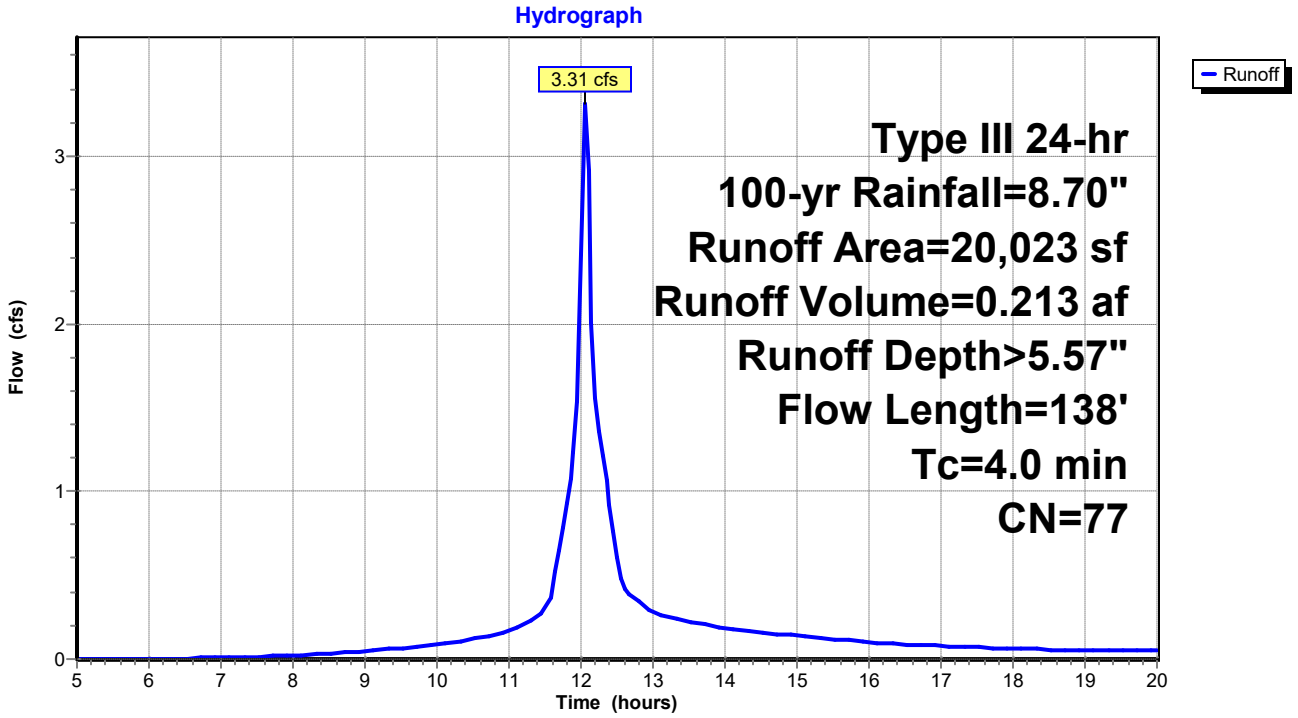

Summary for Subcatchment 2S: Pre Subcatchment 2

Runoff = 3.50 cfs @ 12.17 hrs, Volume= 0.295 af, Depth> 5.56"
Routed to Reach DP2 : Shoreline 2

Runoff by SCS TR-20 method, UH=SCS, Weighted-CN, Time Span= 5.00-20.00 hrs, dt= 0.05 hrs
Type III 24-hr 100-yr Rainfall=8.70"

Area (sf)	CN	Description
27,744	77	Woods, Good, HSG D
27,744		100.00% Pervious Area

Tc (min)	Length (feet)	Slope (ft/ft)	Velocity (ft/sec)	Capacity (cfs)	Description
12.3	148	0.1689	0.20		**Sheet Flow, Tc-1** Woods: Light underbrush n= 0.400 P2= 3.30"
0.4	50	0.1800	2.12		**Shallow Concentrated Flow, Tc-2** Woodland Kv= 5.0 fps
12.7	198	Total			

Subcatchment 2S: Pre Subcatchment 2

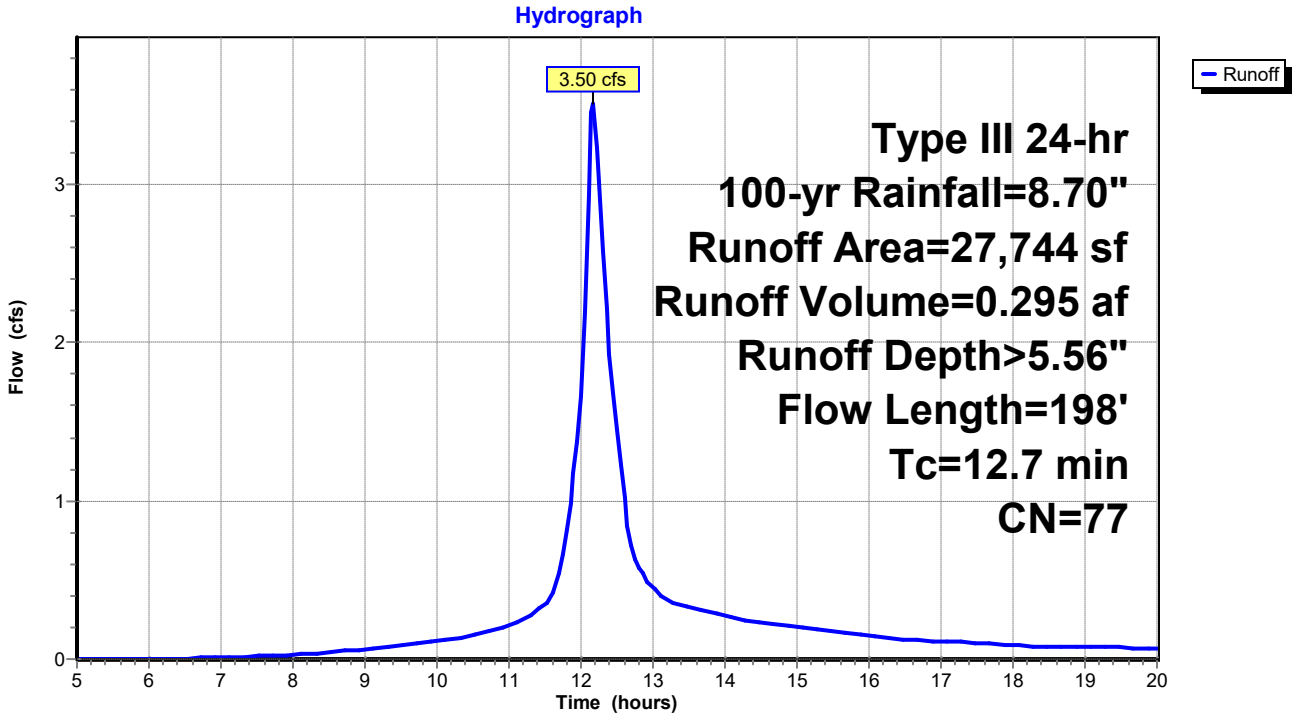

Summary for Subcatchment 3S: Pre Subcatchment 3

Runoff = 10.05 cfs @ 12.10 hrs, Volume= 0.721 af, Depth> 5.92"
Routed to Reach DP3 : Shoreline 3

Runoff by SCS TR-20 method, UH=SCS, Weighted-CN, Time Span= 5.00-20.00 hrs, dt= 0.05 hrs
Type III 24-hr 100-yr Rainfall=8.70"

	Area (sf)	CN	Description
	51,121	77	Woods, Good, HSG D
	751	98	Roofs, HSG D
	4,795	96	Gravel surface, HSG D
*	6,955	88	Sand Beach, HSG D
	63,622	80	Weighted Average
	62,871		98.82% Pervious Area
	751		1.18% Impervious Area

Tc (min)	Length (feet)	Slope (ft/ft)	Velocity (ft/sec)	Capacity (cfs)	Description
2.7	23	0.1740	0.14		**Sheet Flow, Tc-1** Woods: Light underbrush n= 0.400 P2= 3.30"
1.0	70	0.0571	1.19		**Shallow Concentrated Flow, Tc-2** Woodland Kv= 5.0 fps
0.5	170	0.1059	5.24		**Shallow Concentrated Flow, Tc-3** Unpaved Kv= 16.1 fps
2.5	140	0.0357	0.94		**Shallow Concentrated Flow, Tc-4** Woodland Kv= 5.0 fps
0.3	42	0.0714	2.67		**Shallow Concentrated Flow, Tc-4** Nearly Bare & Untilled Kv= 10.0 fps
7.0	445	Total			

Subcatchment 3S: Pre Subcatchment 3

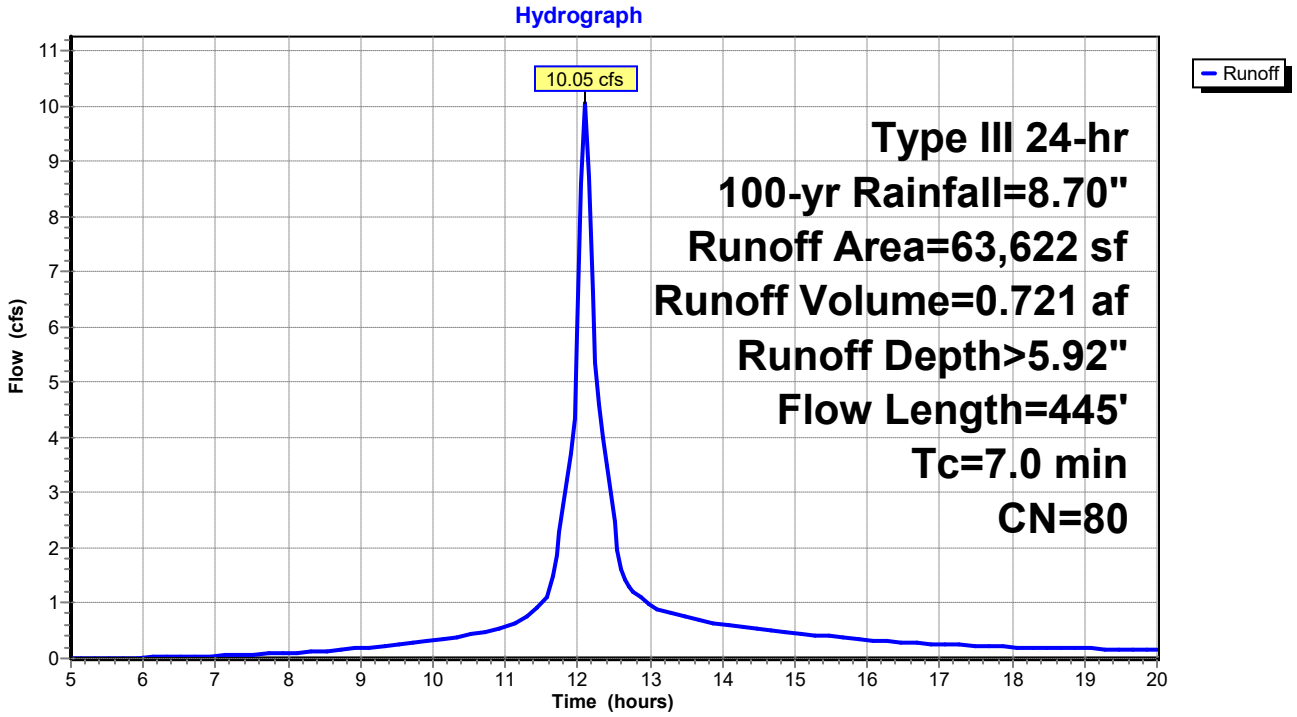

Summary for Reach DP1: Shoreline 1

Inflow Area = 0.460 ac, 0.00% Impervious, Inflow Depth > 5.57" for 100-yr event
Inflow = 3.31 cfs @ 12.06 hrs, Volume= 0.213 af
Outflow = 3.31 cfs @ 12.06 hrs, Volume= 0.213 af, Atten= 0%, Lag= 0.0 min
Routed to Reach SP1 : SACO RIVER / OCEAN

Routing by Stor-Ind+Trans method, Time Span= 5.00-20.00 hrs, dt= 0.05 hrs

Reach DP1: Shoreline 1

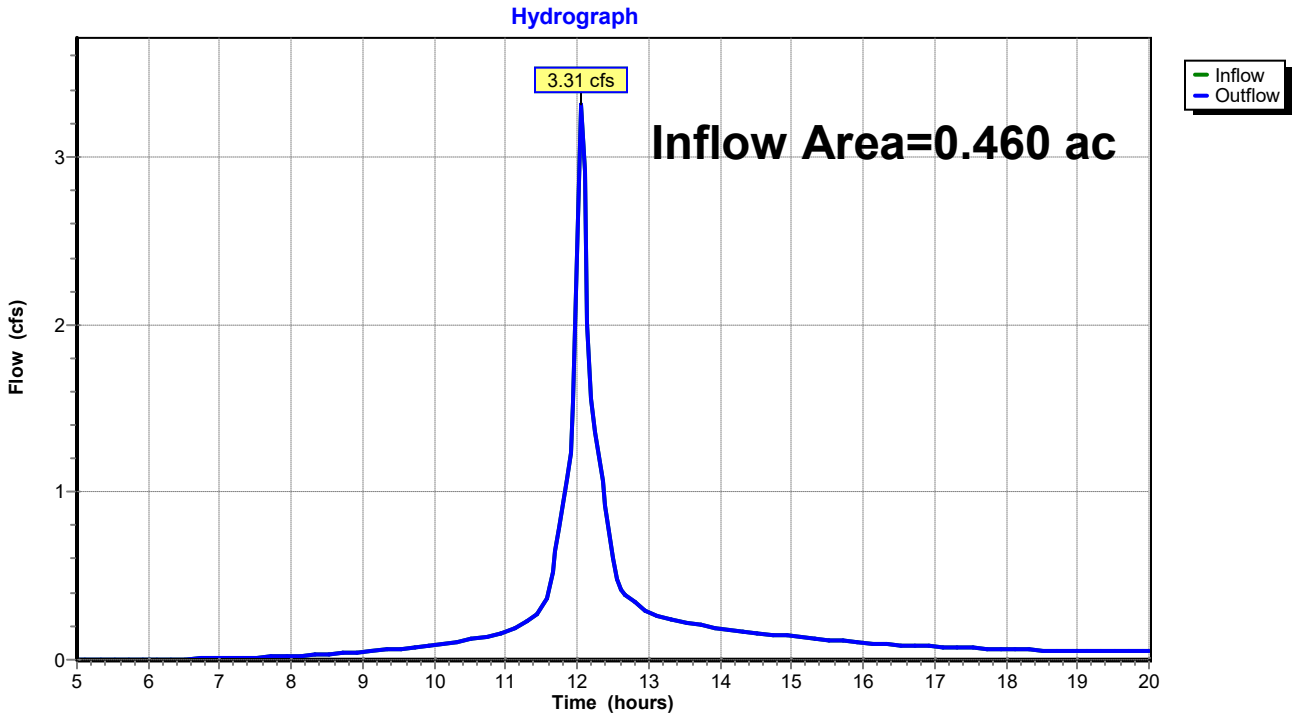

Summary for Reach DP2: Shoreline 2

Inflow Area = 0.637 ac, 0.00% Impervious, Inflow Depth > 5.56" for 100-yr event
Inflow = 3.50 cfs @ 12.17 hrs, Volume= 0.295 af
Outflow = 3.50 cfs @ 12.17 hrs, Volume= 0.295 af, Atten= 0%, Lag= 0.0 min
Routed to Reach SP1 : SACO RIVER / OCEAN

Routing by Stor-Ind+Trans method, Time Span= 5.00-20.00 hrs, dt= 0.05 hrs

Reach DP2: Shoreline 2

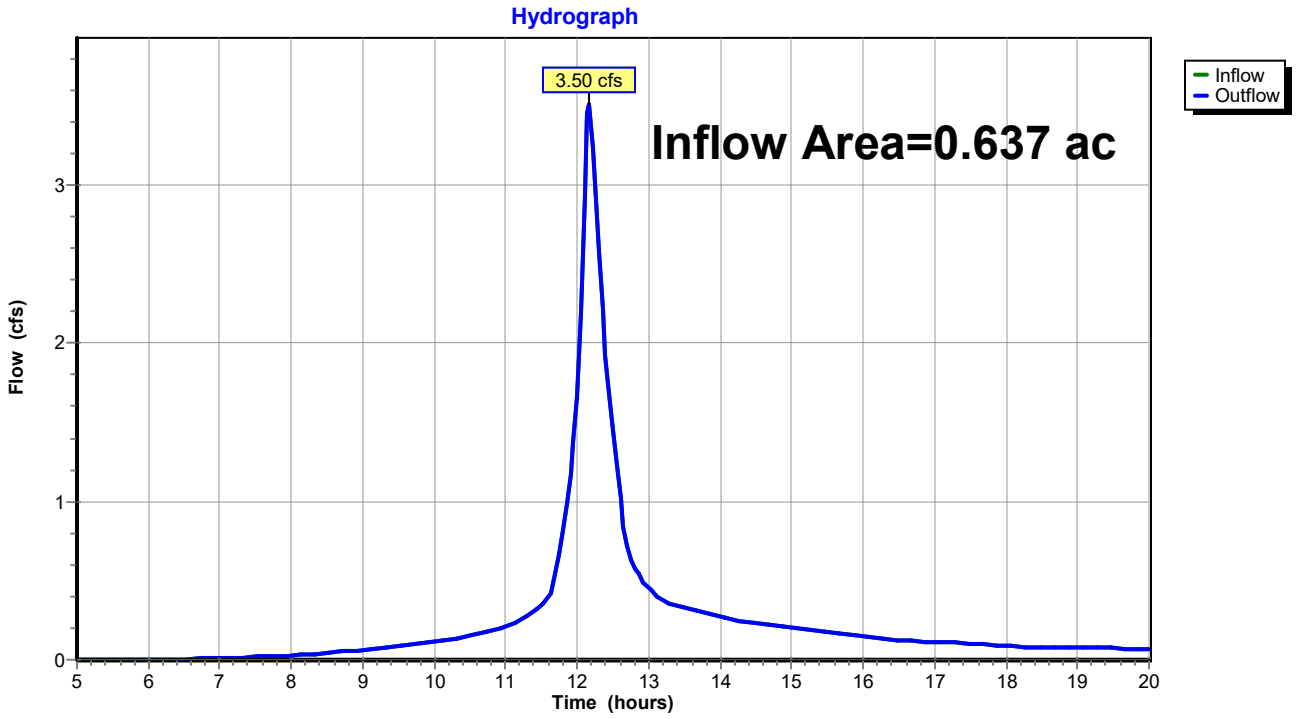

Summary for Reach DP3: Shoreline 3

Inflow Area = 1.461 ac, 1.18% Impervious, Inflow Depth > 5.92" for 100-yr event
Inflow = 10.05 cfs @ 12.10 hrs, Volume= 0.721 af
Outflow = 10.05 cfs @ 12.10 hrs, Volume= 0.721 af, Atten= 0%, Lag= 0.0 min
Routed to Reach SP1 : SACO RIVER / OCEAN

Routing by Stor-Ind+Trans method, Time Span= 5.00-20.00 hrs, dt= 0.05 hrs

Reach DP3: Shoreline 3

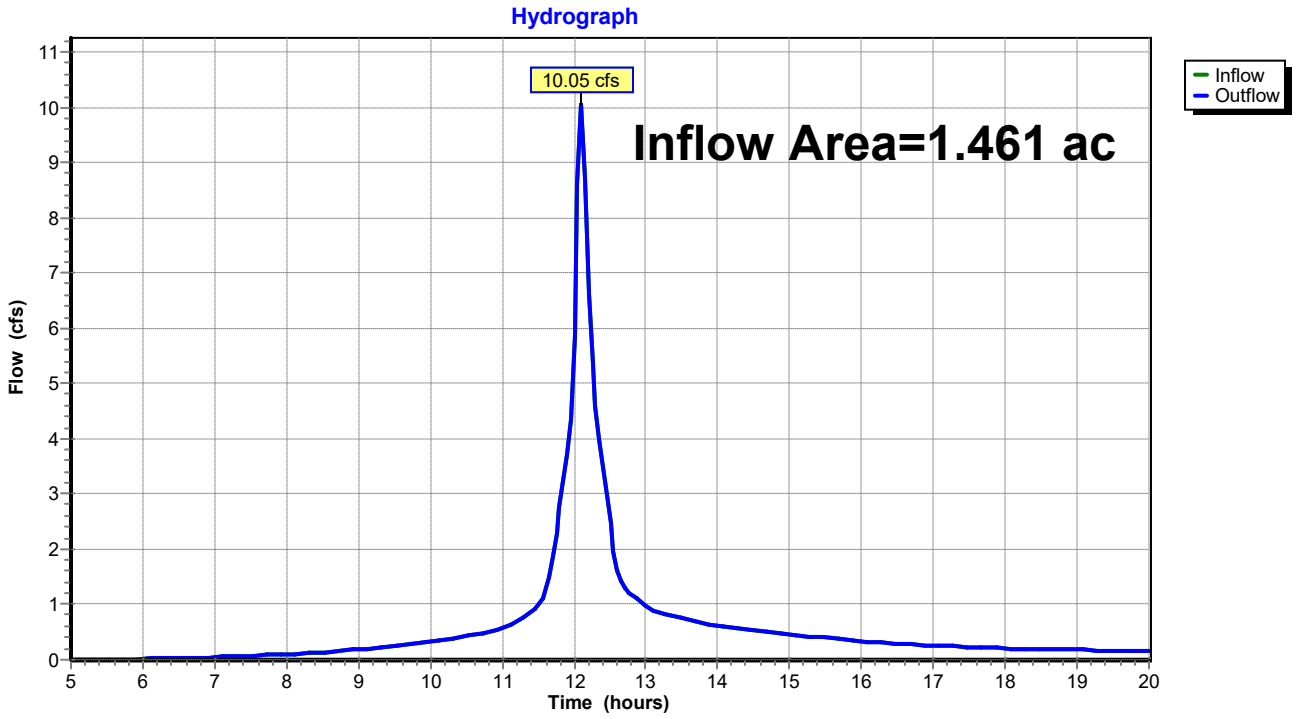

Summary for Reach SP1: SACO RIVER / OCEAN

Inflow Area = 2.557 ac, 0.67% Impervious, Inflow Depth > 5.77" for 100-yr event
Inflow = 15.89 cfs @ 12.10 hrs, Volume= 1.229 af
Outflow = 15.89 cfs @ 12.10 hrs, Volume= 1.229 af, Atten= 0%, Lag= 0.0 min

Routing by Stor-Ind+Trans method, Time Span= 5.00-20.00 hrs, dt= 0.05 hrs

Reach SP1: SACO RIVER / OCEAN

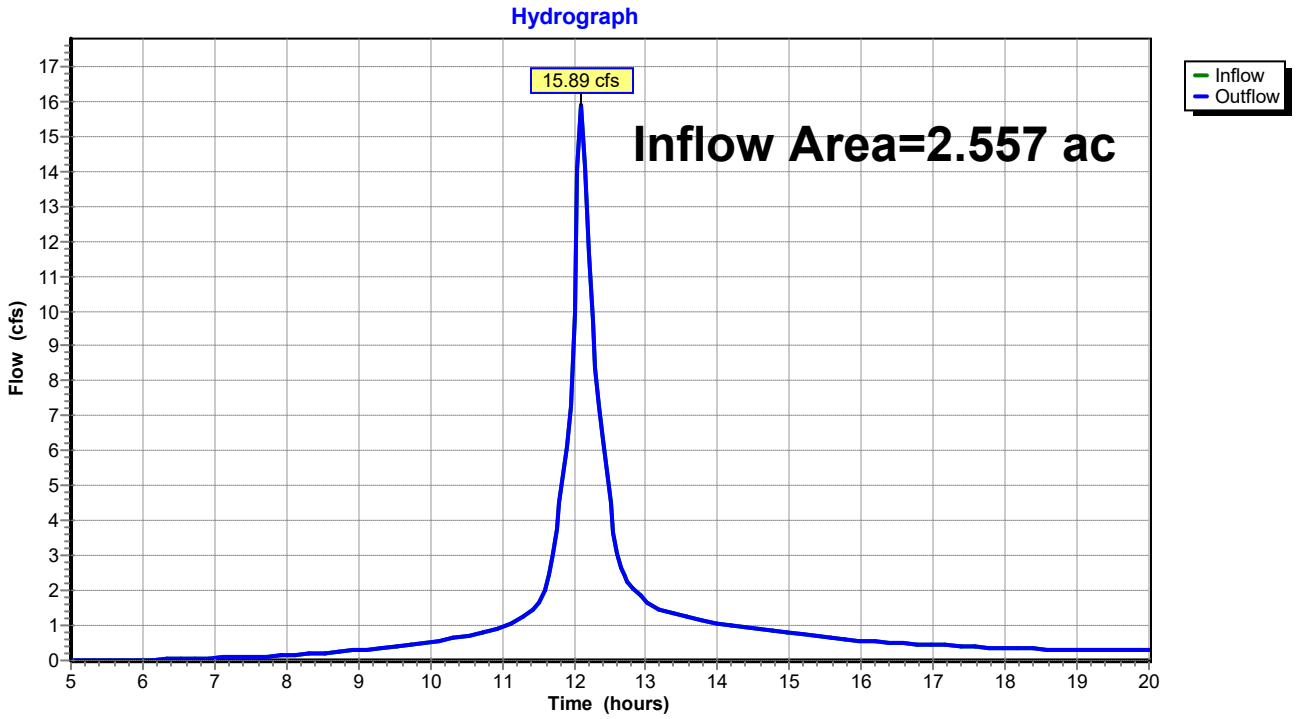

TABLE OF CONTENTS

Project Reports
1 Routing Diagram
2 Project Notes
3 Rainfall Events Listing
4 Area Listing (all nodes)
5 Soil Listing (all nodes)
6 Ground Covers (all nodes)

2-yr Event
7 Node Listing
8 Subcat 1S: Pre Subcatchment 1
9 Subcat 2S: Pre Subcatchment 2
10 Subcat 3S: Pre Subcatchment 3
12 Reach DP1: Shoreline 1
13 Reach DP2: Shoreline 2
14 Reach DP3: Shoreline 3
15 Reach SP1: SACO RIVER / OCEAN

10-yr Event
16 Node Listing
17 Subcat 1S: Pre Subcatchment 1
18 Subcat 2S: Pre Subcatchment 2
19 Subcat 3S: Pre Subcatchment 3
21 Reach DP1: Shoreline 1
22 Reach DP2: Shoreline 2
23 Reach DP3: Shoreline 3
24 Reach SP1: SACO RIVER / OCEAN

25-yr Event
25 Node Listing
26 Subcat 1S: Pre Subcatchment 1
27 Subcat 2S: Pre Subcatchment 2
28 Subcat 3S: Pre Subcatchment 3
30 Reach DP1: Shoreline 1
31 Reach DP2: Shoreline 2
32 Reach DP3: Shoreline 3
33 Reach SP1: SACO RIVER / OCEAN

100-yr Event
34 Node Listing
35 Subcat 1S: Pre Subcatchment 1
36 Subcat 2S: Pre Subcatchment 2
37 Subcat 3S: Pre Subcatchment 3
39 Reach DP1: Shoreline 1
40 Reach DP2: Shoreline 2
41 Reach DP3: Shoreline 3

42 Reach SP1: SACO RIVER / OCEAN

Appendix C

Post Development HydroCAD Calculations

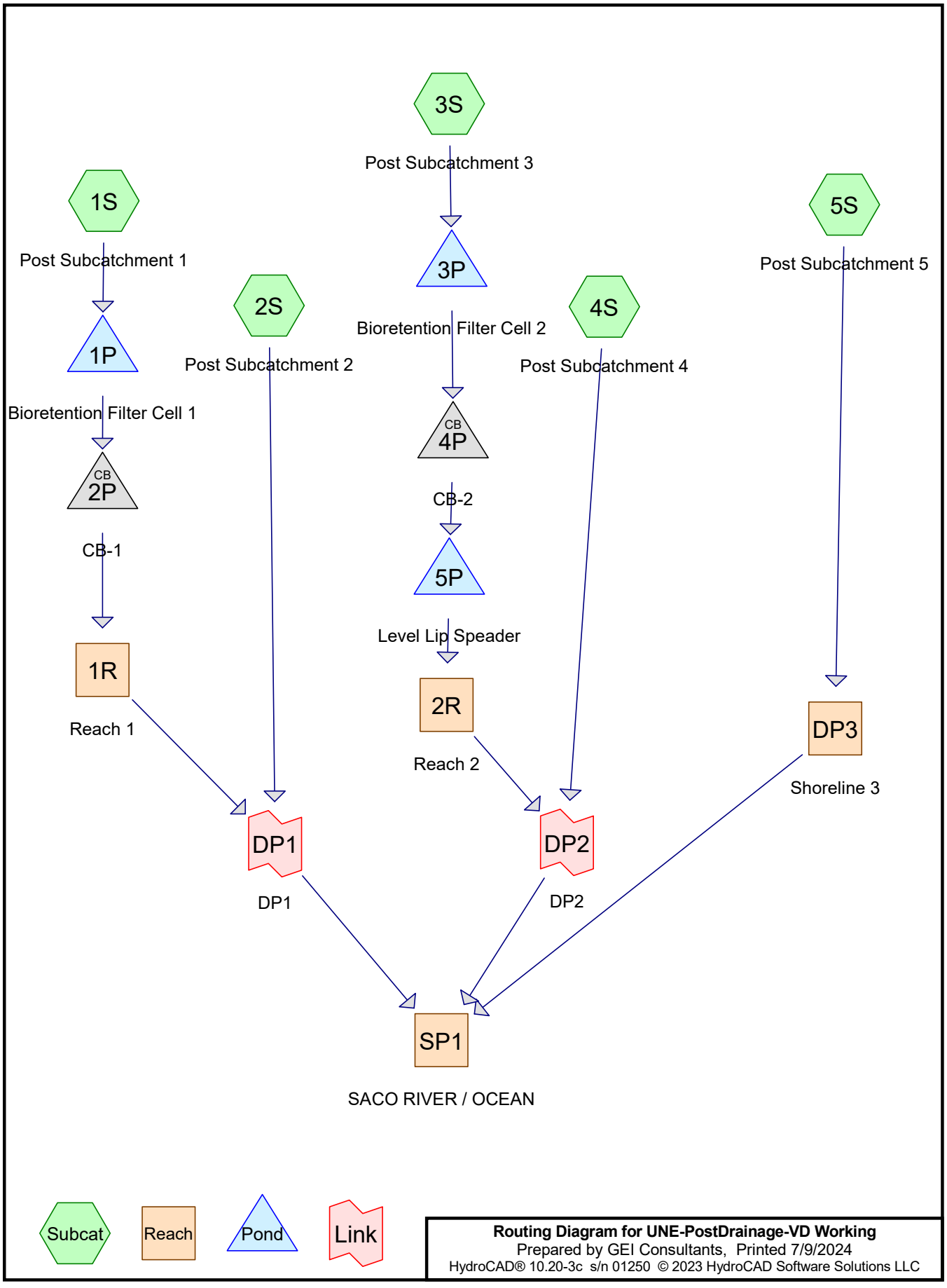
3S
Post Subcatchment 3
1S
Post Subcatchment 1
5S
Post Subcatchment 5
3P
2S
Post Subcatchment 2
4S
Post Subcatchment 4
Bioretention Filter Cell 2
1P
Bioretention Filter Cell 1
CB
4P
CB
2P
CB-2
CB-1
5P
Level Lip Spreader
1R
2R
DP3
Reach 1
Reach 2
Shoreline 3
DP1
DP2
DP1
DP2
SP1
SACO RIVER / OCEAN
Subcat
Reach
Pond
Link
Routing Diagram for UNE-PostDrainage-VD Working
Prepared by GEI Consultants, Printed 7/9/2024
HydroCAD® 10.20-3c s/n 01250 © 2023 HydroCAD Software Solutions LLC

Project Notes

Defined 3 rainfall events from ME-York IDF

Rainfall Events Listing

Event#	Event Name	Storm Type	Curve	Mode	Duration (hours)	B/B	Depth (inches)	AMC
1	2-yr	Type III 24-hr		Default	24.00	1	3.30	2
2	10-yr	Type III 24-hr		Default	24.00	1	4.90	2
3	25-yr	Type III 24-hr		Default	24.00	1	6.20	2
4	100-yr	Type III 24-hr		Default	24.00	1	8.70	2
5	WQ	Type III 24-hr		Default	24.00	1	1.00	2

Area Listing (all nodes)

Area (acres)	CN	Description (subcatchment-numbers)
0.081	80	>75% Grass cover, Good, HSG D (1S, 3S, 4S)
0.013	73	Biofiltration cell, Good, HSG D (3S)
0.020	73	Bioretention Filter Cell, Good, HSG D (1S)
0.089	96	Gravel surface, HSG D (5S)
0.039	98	Ledge, HSG D (1S, 3S)
0.090	98	Paved Access Drive, HSG D (1S)
0.038	98	Paved acccess drive, HSG D (5S)
0.093	98	Paved access drive, HSG D (3S, 4S)
0.028	98	Paved parking, HSG D (2S)
0.017	98	Roofs, HSG D (5S)
0.160	88	Sand beach, HSG D (5S)
0.362	79	Woods, Fair, HSG D (4S)
1.526	77	Woods, Good, HSG D (1S, 2S, 3S, 5S)
2.557	**81**	**TOTAL AREA**

Soil Listing (all nodes)

Area (acres)	Soil Group	Subcatchment Numbers
0.000	HSG A	
0.000	HSG B	
0.000	HSG C	
2.557	HSG D	1S, 2S, 3S, 4S, 5S
0.000	Other	
2.557		**TOTAL AREA**

Ground Covers (all nodes)

HSG-A (acres)	HSG-B (acres)	HSG-C (acres)	HSG-D (acres)	Other (acres)	Total (acres)	Ground Cover	Subcatchment Numbers
0.000	0.000	0.000	0.081	0.000	0.081	>75% Grass cover, Good	1S, 3S, 4S
0.000	0.000	0.000	0.013	0.000	0.013	Biofiltration cell, Good	3S
0.000	0.000	0.000	0.020	0.000	0.020	Bioretention Filter Cell, Good	1S
0.000	0.000	0.000	0.089	0.000	0.089	Gravel surface	5S
0.000	0.000	0.000	0.039	0.000	0.039	Ledge	1S, 3S
0.000	0.000	0.000	0.090	0.000	0.090	Paved Access Drive	1S
0.000	0.000	0.000	0.038	0.000	0.038	Paved acccess drive	5S
0.000	0.000	0.000	0.093	0.000	0.093	Paved access drive	3S, 4S
0.000	0.000	0.000	0.028	0.000	0.028	Paved parking	2S
0.000	0.000	0.000	0.017	0.000	0.017	Roofs	5S
0.000	0.000	0.000	0.160	0.000	0.160	Sand beach	5S
0.000	0.000	0.000	0.362	0.000	0.362	Woods, Fair	4S
0.000	0.000	0.000	1.526	0.000	1.526	Woods, Good	1S, 2S, 3S, 5S
0.000	**0.000**	**0.000**	**2.557**	**0.000**	**2.557**	**TOTAL AREA**	

Pipe Listing (all nodes)

Line#	Node Number	In-Invert (feet)	Out-Invert (feet)	Length (feet)	Slope (ft/ft)	n	Width (inches)	Diam/Height (inches)	Inside-Fill (inches)	Node Name
1	2P	13.75	12.00	48.0	0.0365	0.013	0.0	15.0	0.0	
2	4P	18.75	18.00	40.0	0.0187	0.013	0.0	18.0	0.0	

Time span=5.00-20.00 hrs, dt=0.05 hrs, 301 points
Runoff by SCS TR-20 method, UH=SCS, Weighted-CN
Reach routing by Stor-Ind method - Pond routing by Stor-Ind method

Subcatchment 1S: Post Subcatchment 1 Runoff Area=9,832 sf 50.01% Impervious Runoff Depth>1.88"
Flow Length=172' Tc=0.8 min CN=87 Runoff=0.59 cfs 0.035 af

Subcatchment 2S: Post Subcatchment 2 Runoff Area=11,488 sf 10.78% Impervious Runoff Depth>1.30"
Flow Length=133' Tc=3.4 min CN=79 Runoff=0.46 cfs 0.029 af

Subcatchment 3S: Post Subcatchment 3 Runoff Area=13,365 sf 33.49% Impervious Runoff Depth>1.65"
Flow Length=262' Tc=4.9 min CN=84 Runoff=0.64 cfs 0.042 af

Subcatchment 4S: Post Subcatchment 4 Runoff Area=17,529 sf 1.68% Impervious Runoff Depth>1.30"
Flow Length=126' Tc=7.2 min CN=79 Runoff=0.62 cfs 0.044 af

Subcatchment 5S: Post Subcatchment 5 Runoff Area=59,179 sf 4.06% Impervious Runoff Depth>1.37"
Flow Length=445' Tc=7.0 min CN=80 Runoff=2.23 cfs 0.155 af

Reach 1R: Reach 1 Inflow=0.58 cfs 0.034 af
Outflow=0.58 cfs 0.034 af

Reach 2R: Reach 2 Inflow=0.61 cfs 0.038 af
Outflow=0.61 cfs 0.038 af

Reach DP3: Shoreline 3 Inflow=2.23 cfs 0.155 af
Outflow=2.23 cfs 0.155 af

Reach SP1: SACO RIVER / OCEAN Inflow=4.22 cfs 0.300 af
Outflow=4.22 cfs 0.300 af

Pond 1P: Bioretention Filter Cell 1 Peak Elev=18.11' Storage=79 cf Inflow=0.59 cfs 0.035 af
Outflow=0.58 cfs 0.034 af

Pond 2P: CB-1 Peak Elev=14.15' Inflow=0.58 cfs 0.034 af
15.0" Round Culvert n=0.013 L=48.0' S=0.0365 '/' Outflow=0.58 cfs 0.034 af

Pond 3P: Bioretention Filter Cell 2 Peak Elev=23.62' Storage=64 cf Inflow=0.64 cfs 0.042 af
Outflow=0.64 cfs 0.041 af

Pond 4P: CB-2 Peak Elev=19.15' Inflow=0.64 cfs 0.041 af
18.0" Round Culvert n=0.013 L=40.0' S=0.0187 '/' Outflow=0.64 cfs 0.041 af

Pond 5P: Level Lip Speader Peak Elev=18.00' Storage=115 cf Inflow=0.64 cfs 0.041 af
Outflow=0.61 cfs 0.038 af

Link DP1: DP1 Inflow=1.02 cfs 0.063 af
Primary=1.02 cfs 0.063 af

Link DP2: DP2 Inflow=1.24 cfs 0.082 af
Primary=1.24 cfs 0.082 af

Total Runoff Area = 2.557 ac Runoff Volume = 0.305 af Average Runoff Depth = 1.43"
88.04% Pervious = 2.251 ac 11.96% Impervious = 0.306 ac

Summary for Subcatchment 1S: Post Subcatchment 1

Runoff = 0.59 cfs @ 12.01 hrs, Volume= 0.035 af, Depth> 1.88"
Routed to Pond 1P : Bioretention Filter Cell 1

Runoff by SCS TR-20 method, UH=SCS, Weighted-CN, Time Span= 5.00-20.00 hrs, dt= 0.05 hrs
Type III 24-hr 2-yr Rainfall=3.30"

	Area (sf)	CN	Description
	3,430	77	Woods, Good, HSG D
*	982	98	Ledge, HSG D
	595	80	>75% Grass cover, Good, HSG D
*	3,935	98	Paved Access Drive, HSG D
*	890	73	Bioretention Filter Cell, Good, HSG D
	9,832	87	Weighted Average
	4,915		49.99% Pervious Area
	4,917		50.01% Impervious Area

Tc (min)	Length (feet)	Slope (ft/ft)	Velocity (ft/sec)	Capacity (cfs)	Description
0.4	46	0.0500	1.73		**Sheet Flow, Tc-1** Smooth surfaces n= 0.011 P2= 3.30"
0.3	102	0.0500	5.25	15.74	**Channel Flow, Tc-2** Area= 3.0 sf Perim= 9.2' r= 0.33' n= 0.030 Earth, grassed & winding
0.1	24	0.0625	3.75		**Shallow Concentrated Flow, Tc-3** Grassed Waterway Kv= 15.0 fps
0.8	172	Total			

Subcatchment 1S: Post Subcatchment 1

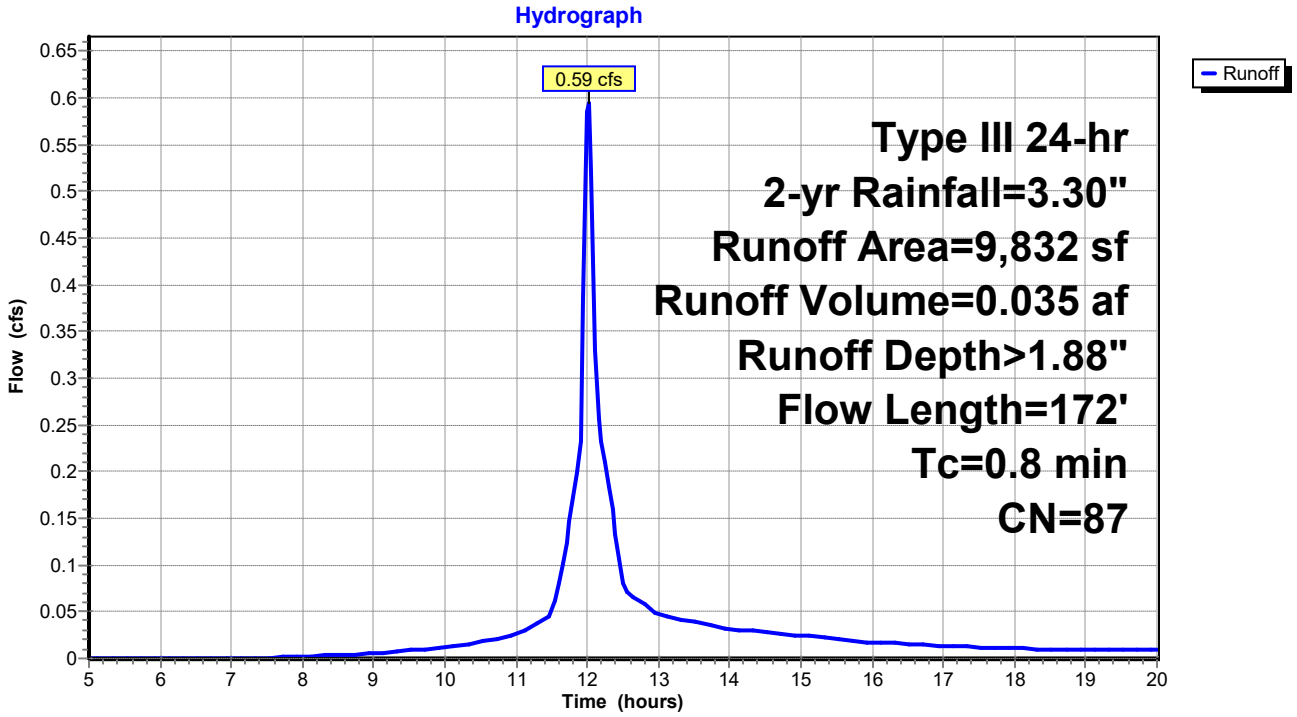

Summary for Subcatchment 2S: Post Subcatchment 2

Runoff = 0.46 cfs @ 12.06 hrs, Volume= 0.029 af, Depth> 1.30"
Routed to Link DP1 : DP1

Runoff by SCS TR-20 method, UH=SCS, Weighted-CN, Time Span= 5.00-20.00 hrs, dt= 0.05 hrs
Type III 24-hr 2-yr Rainfall=3.30"

Area (sf)	CN	Description
10,250	77	Woods, Good, HSG D
1,238	98	Paved parking, HSG D
11,488	79	Weighted Average
10,250		89.22% Pervious Area
1,238		10.78% Impervious Area

Tc (min)	Length (feet)	Slope (ft/ft)	Velocity (ft/sec)	Capacity (cfs)	Description
2.5	21	0.1905	0.14		**Sheet Flow, Tc-1** Woods: Light underbrush n= 0.400 P2= 3.30"
0.9	112	0.1696	2.06		**Shallow Concentrated Flow, Tc-2** Woodland Kv= 5.0 fps
3.4	133	Total			

Subcatchment 2S: Post Subcatchment 2

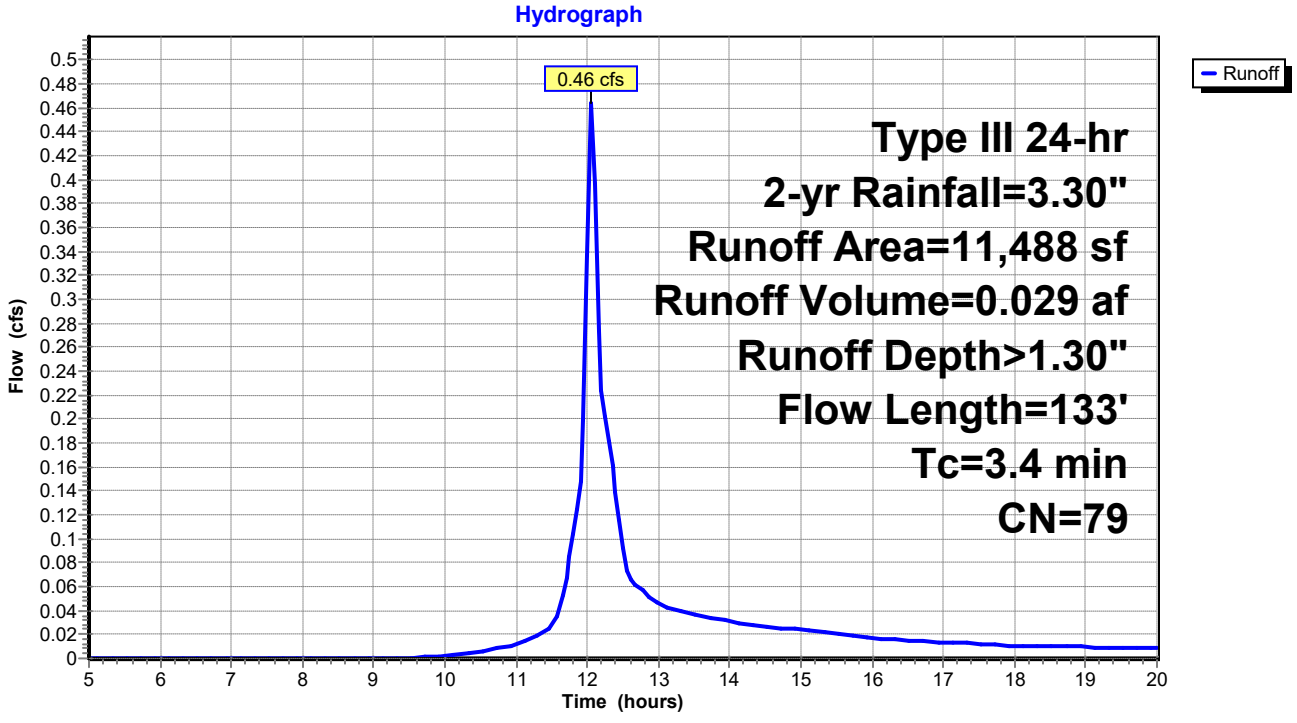

Summary for Subcatchment 3S: Post Subcatchment 3

Runoff = 0.64 cfs @ 12.08 hrs, Volume= 0.042 af, Depth> 1.65"
Routed to Pond 3P : Bioretention Filter Cell 2

Runoff by SCS TR-20 method, UH=SCS, Weighted-CN, Time Span= 5.00-20.00 hrs, dt= 0.05 hrs
Type III 24-hr 2-yr Rainfall=3.30"

	Area (sf)	CN	Description
	6,822	77	Woods, Good, HSG D
*	580	73	Biofiltration cell, Good, HSG D
*	3,768	98	Paved access drive, HSG D
	1,487	80	>75% Grass cover, Good, HSG D
*	708	98	Ledge, HSG D
	13,365	84	Weighted Average
	8,889		66.51% Pervious Area
	4,476		33.49% Impervious Area

Tc (min)	Length (feet)	Slope (ft/ft)	Velocity (ft/sec)	Capacity (cfs)	Description
4.2	43	0.2093	0.17		**Sheet Flow, Tc-1** Woods: Light underbrush n= 0.400 P2= 3.30"
0.7	214	0.0500	5.25	15.74	**Channel Flow, Tc-2** Area= 3.0 sf Perim= 9.2' r= 0.33' n= 0.030 Earth, grassed & winding
0.0	5	0.0500	3.35		**Shallow Concentrated Flow, Tc-3** Grassed Waterway Kv= 15.0 fps
4.9	262	Total			

Subcatchment 3S: Post Subcatchment 3

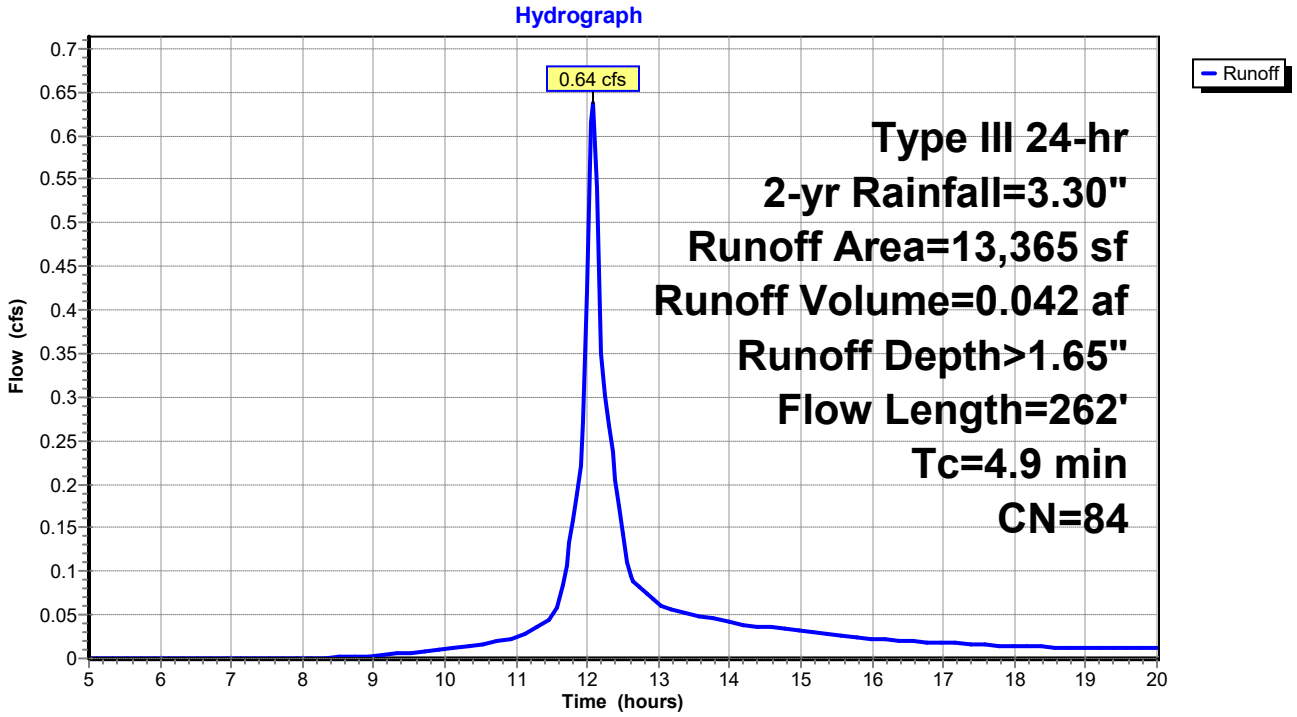

Summary for Subcatchment 4S: Post Subcatchment 4

Runoff = 0.62 cfs @ 12.11 hrs, Volume= 0.044 af, Depth> 1.30"
Routed to Link DP2 : DP2

Runoff by SCS TR-20 method, UH=SCS, Weighted-CN, Time Span= 5.00-20.00 hrs, dt= 0.05 hrs
Type III 24-hr 2-yr Rainfall=3.30"

	Area (sf)	CN	Description
*	295	98	Paved access drive, HSG D
	1,450	80	>75% Grass cover, Good, HSG D
	15,784	79	Woods, Fair, HSG D
	17,529	79	Weighted Average
	17,234		98.32% Pervious Area
	295		1.68% Impervious Area

Tc (min)	Length (feet)	Slope (ft/ft)	Velocity (ft/sec)	Capacity (cfs)	Description
6.8	62	0.1290	0.15		**Sheet Flow, Tc-1** Woods: Light underbrush n= 0.400 P2= 3.30"
0.4	64	0.2343	2.42		**Shallow Concentrated Flow, Tc-2** Woodland Kv= 5.0 fps
7.2	126	Total			

Subcatchment 4S: Post Subcatchment 4

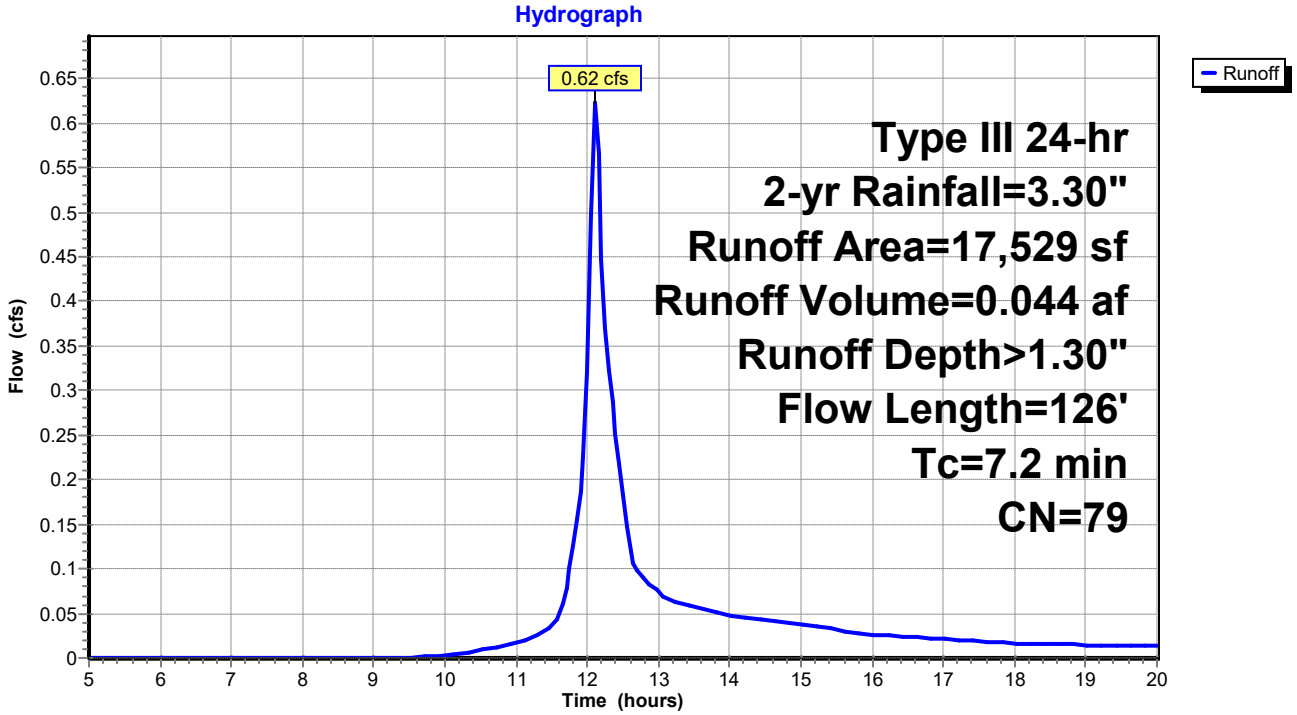

Summary for Subcatchment 5S: Post Subcatchment 5

Runoff = 2.23 cfs @ 12.11 hrs, Volume= 0.155 af, Depth> 1.37"
Routed to Reach DP3 : Shoreline 3

Runoff by SCS TR-20 method, UH=SCS, Weighted-CN, Time Span= 5.00-20.00 hrs, dt= 0.05 hrs
Type III 24-hr 2-yr Rainfall=3.30"

	Area (sf)	CN	Description
*	1,650	98	Paved acccess drive, HSG D
	751	98	Roofs, HSG D
*	6,955	88	Sand beach, HSG D
	3,872	96	Gravel surface, HSG D
	45,951	77	Woods, Good, HSG D
	59,179	80	Weighted Average
	56,778		95.94% Pervious Area
	2,401		4.06% Impervious Area

Tc (min)	Length (feet)	Slope (ft/ft)	Velocity (ft/sec)	Capacity (cfs)	Description
2.7	23	0.1740	0.14		**Sheet Flow, Tc-1** Woods: Light underbrush n= 0.400 P2= 3.30"
1.0	70	0.0574	1.20		**Shallow Concentrated Flow, Tc-2** Woodland Kv= 5.0 fps
0.5	170	0.1059	5.24		**Shallow Concentrated Flow, Tc-3** Unpaved Kv= 16.1 fps
2.5	140	0.0357	0.94		**Shallow Concentrated Flow, Tc-4** Woodland Kv= 5.0 fps
0.3	42	0.0714	2.67		**Shallow Concentrated Flow, Tc-5** Nearly Bare & Untilled Kv= 10.0 fps
7.0	445	Total			

Subcatchment 5S: Post Subcatchment 5

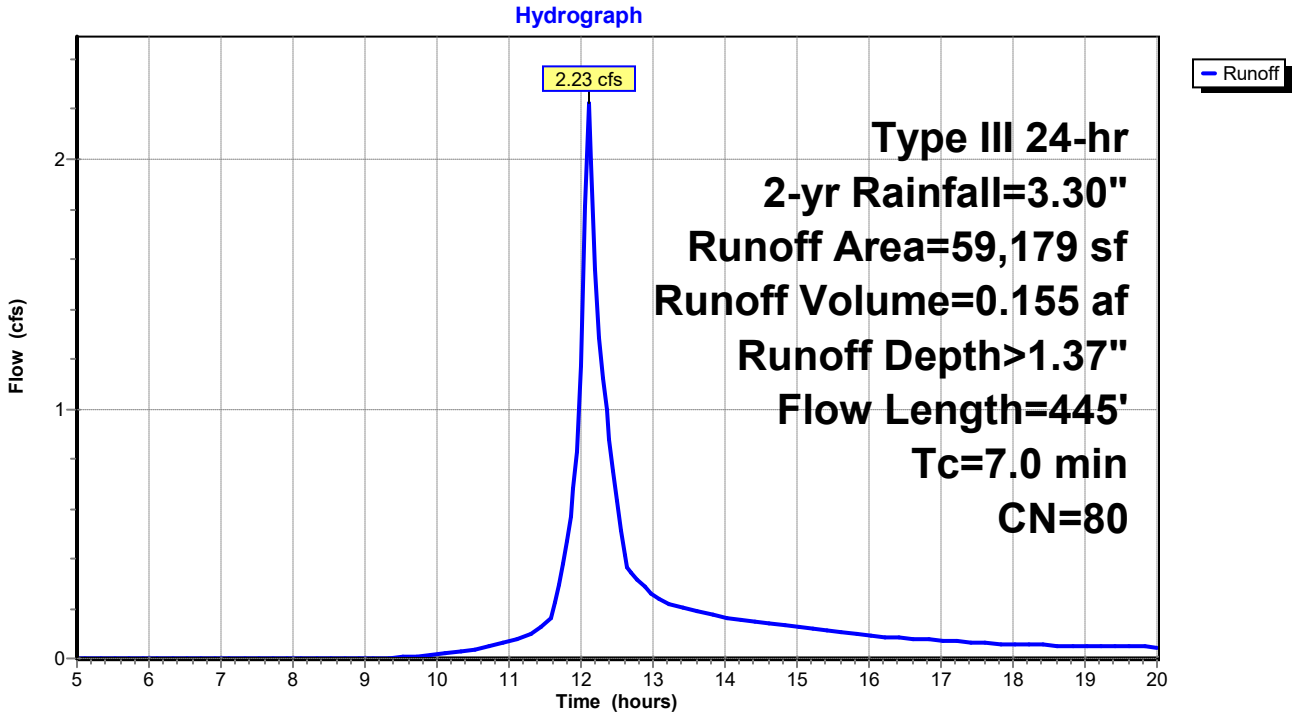

Summary for Reach 1R: Reach 1

Inflow Area = 0.226 ac, 50.01% Impervious, Inflow Depth > 1.81" for 2-yr event
Inflow = 0.58 cfs @ 12.03 hrs, Volume= 0.034 af
Outflow = 0.58 cfs @ 12.03 hrs, Volume= 0.034 af, Atten= 0%, Lag= 0.0 min
Routed to Link DP1 : DP1

Routing by Stor-Ind method, Time Span= 5.00-20.00 hrs, dt= 0.05 hrs

Reach 1R: Reach 1

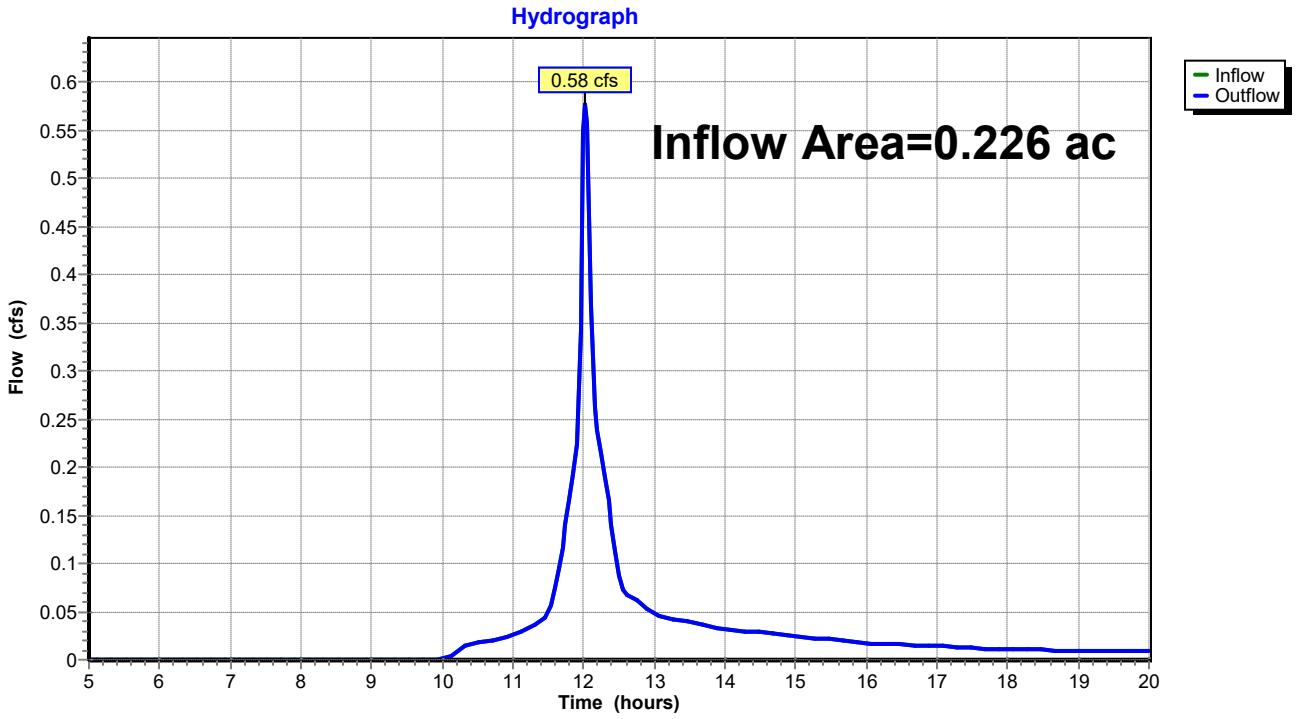

Summary for Reach 2R: Reach 2

Inflow Area = 0.307 ac, 33.49% Impervious, Inflow Depth > 1.50" for 2-yr event
Inflow = 0.61 cfs @ 12.11 hrs, Volume= 0.038 af
Outflow = 0.61 cfs @ 12.11 hrs, Volume= 0.038 af, Atten= 0%, Lag= 0.0 min
Routed to Link DP2 : DP2

Routing by Stor-Ind method, Time Span= 5.00-20.00 hrs, dt= 0.05 hrs

Reach 2R: Reach 2

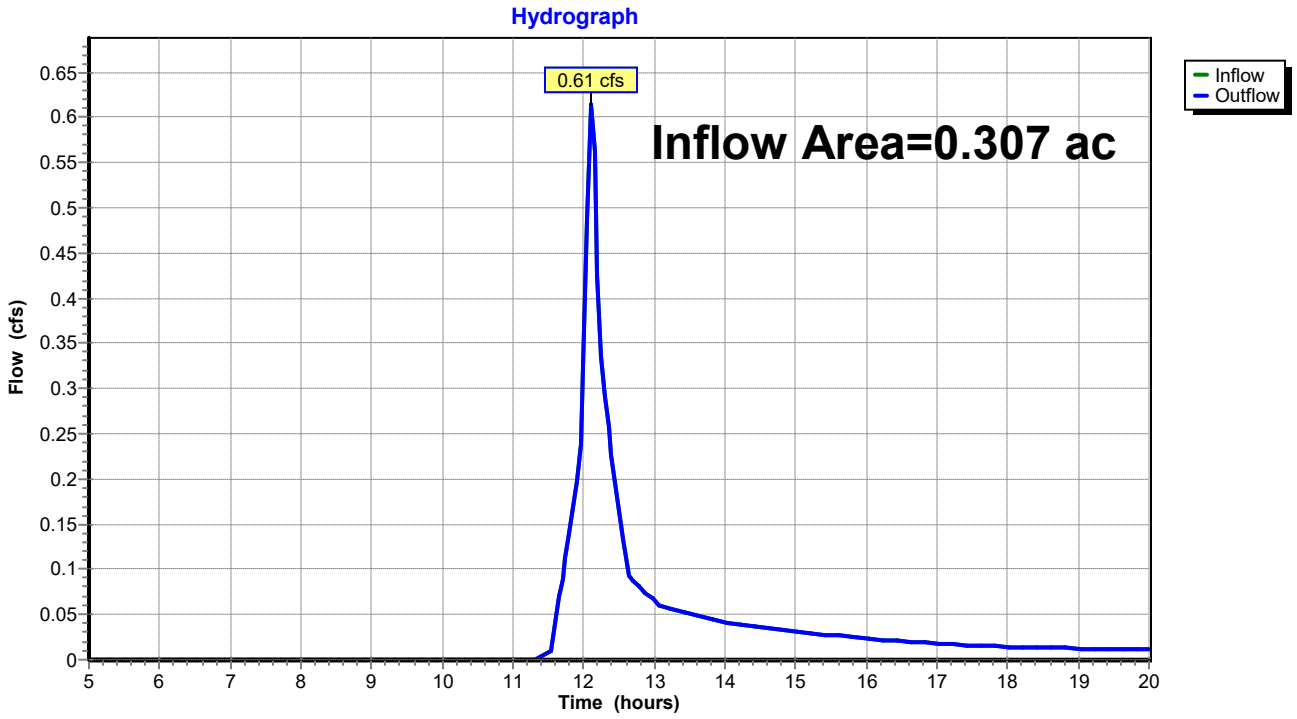

Summary for Reach DP3: Shoreline 3

Inflow Area = 1.359 ac, 4.06% Impervious, Inflow Depth > 1.37" for 2-yr event
Inflow = 2.23 cfs @ 12.11 hrs, Volume= 0.155 af
Outflow = 2.23 cfs @ 12.11 hrs, Volume= 0.155 af, Atten= 0%, Lag= 0.0 min
Routed to Reach SP1 : SACO RIVER / OCEAN

Routing by Stor-Ind method, Time Span= 5.00-20.00 hrs, dt= 0.05 hrs

Reach DP3: Shoreline 3

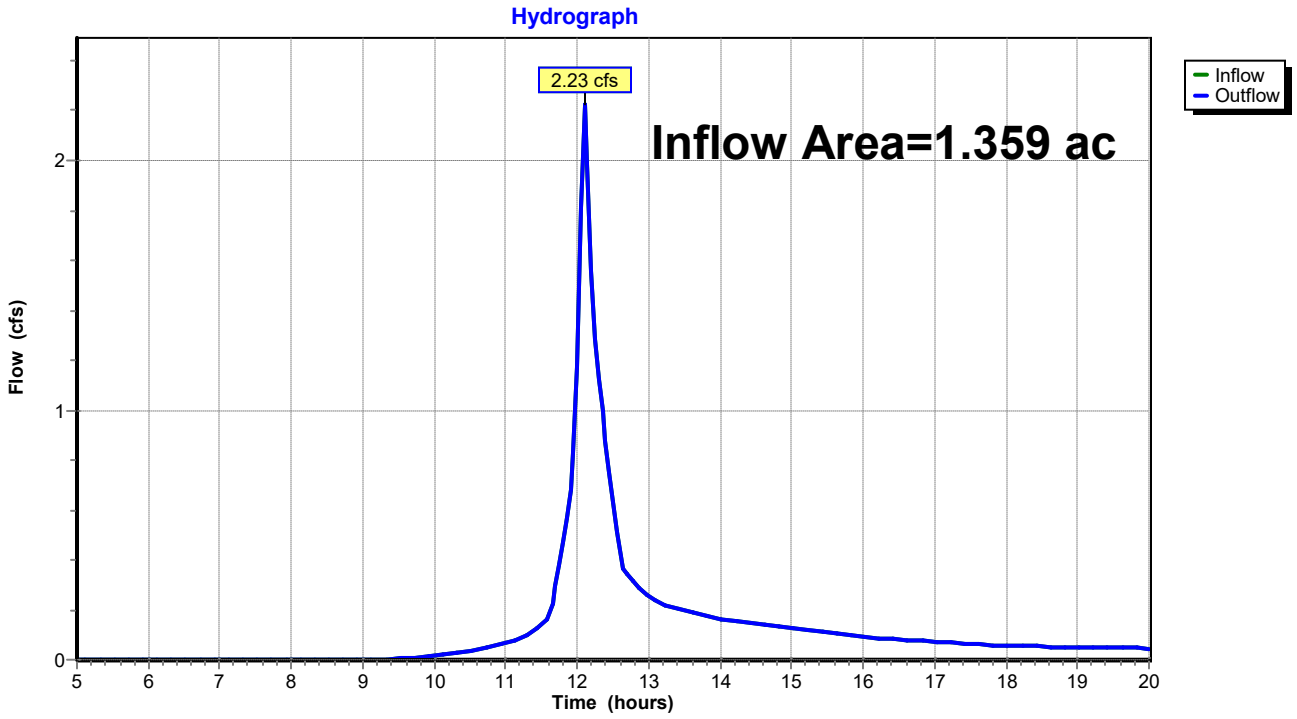

Summary for Reach SP1: SACO RIVER / OCEAN

Inflow Area = 2.557 ac, 11.96% Impervious, Inflow Depth > 1.41" for 2-yr event
Inflow = 4.22 cfs @ 12.10 hrs, Volume= 0.300 af
Outflow = 4.22 cfs @ 12.10 hrs, Volume= 0.300 af, Atten= 0%, Lag= 0.0 min

Routing by Stor-Ind method, Time Span= 5.00-20.00 hrs, dt= 0.05 hrs

Reach SP1: SACO RIVER / OCEAN

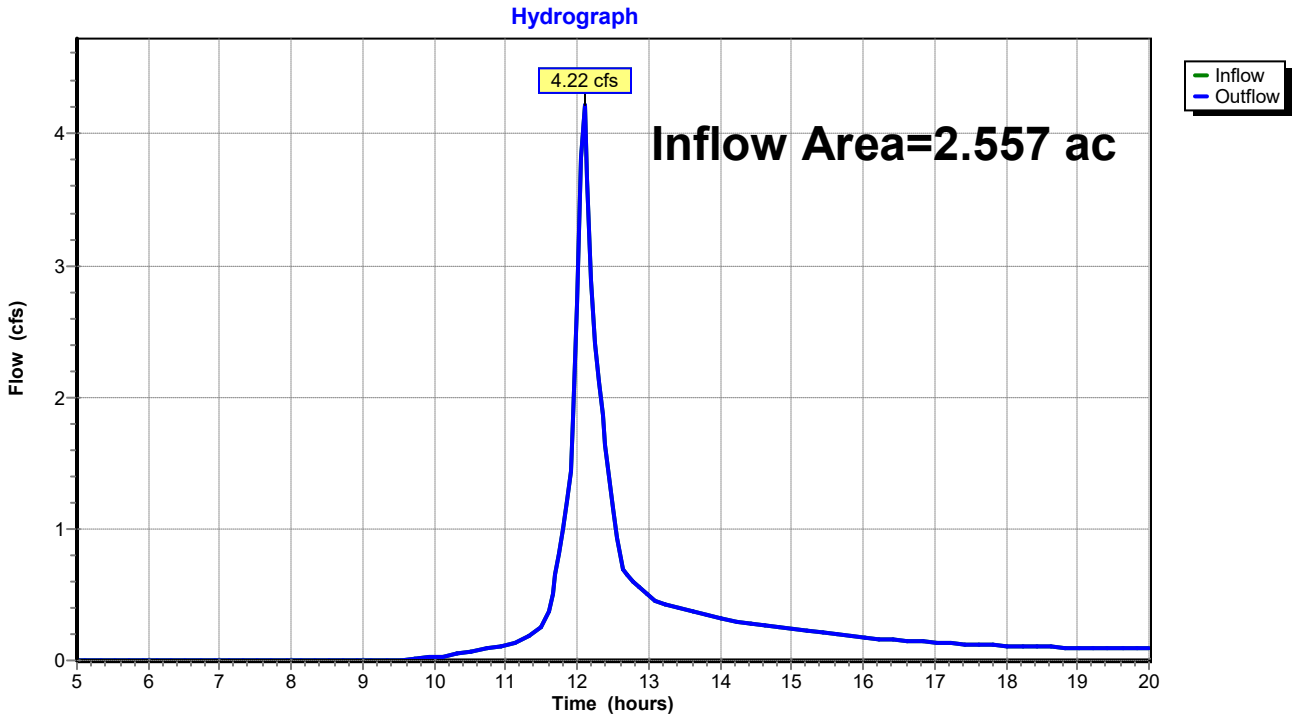

Summary for Pond 1P: Bioretention Filter Cell 1

Inflow Area = 0.226 ac, 50.01% Impervious, Inflow Depth > 1.88" for 2-yr event
Inflow = 0.59 cfs @ 12.01 hrs, Volume= 0.035 af
Outflow = 0.58 cfs @ 12.03 hrs, Volume= 0.034 af, Atten= 3%, Lag= 0.8 min
Primary = 0.58 cfs @ 12.03 hrs, Volume= 0.034 af
Routed to Pond 2P : CB-1

Routing by Stor-Ind method, Time Span= 5.00-20.00 hrs, dt= 0.05 hrs
Peak Elev= 18.11' @ 12.03 hrs Surf.Area= 249 sf Storage= 79 cf

Plug-Flow detention time= 22.5 min calculated for 0.034 af (96% of inflow)
Center-of-Mass det. time= 9.1 min (788.5 - 779.4)

Volume	Invert	Avail.Storage	Storage Description
#1	17.50'	200 cf	**Custom Stage Data (Prismatic)** Listed below (Recalc)

Elevation (feet)	Surf.Area (sq-ft)	Inc.Store (cubic-feet)	Cum.Store (cubic-feet)
17.50	0	0	0
18.00	213	53	53
18.50	372	146	200

Device	Routing	Invert	Outlet Devices
#1	Primary	18.00'	**18.0" Horiz. Orifice/Grate** C= 0.600 in 24.0" Grate (56% open area) Limited to weir flow at low heads

Primary OutFlow Max=0.55 cfs @ 12.03 hrs HW=18.11' (Free Discharge)
↑—**1=Orifice/Grate** (Weir Controls 0.55 cfs @ 1.08 fps)

Pond 1P: Bioretention Filter Cell 1

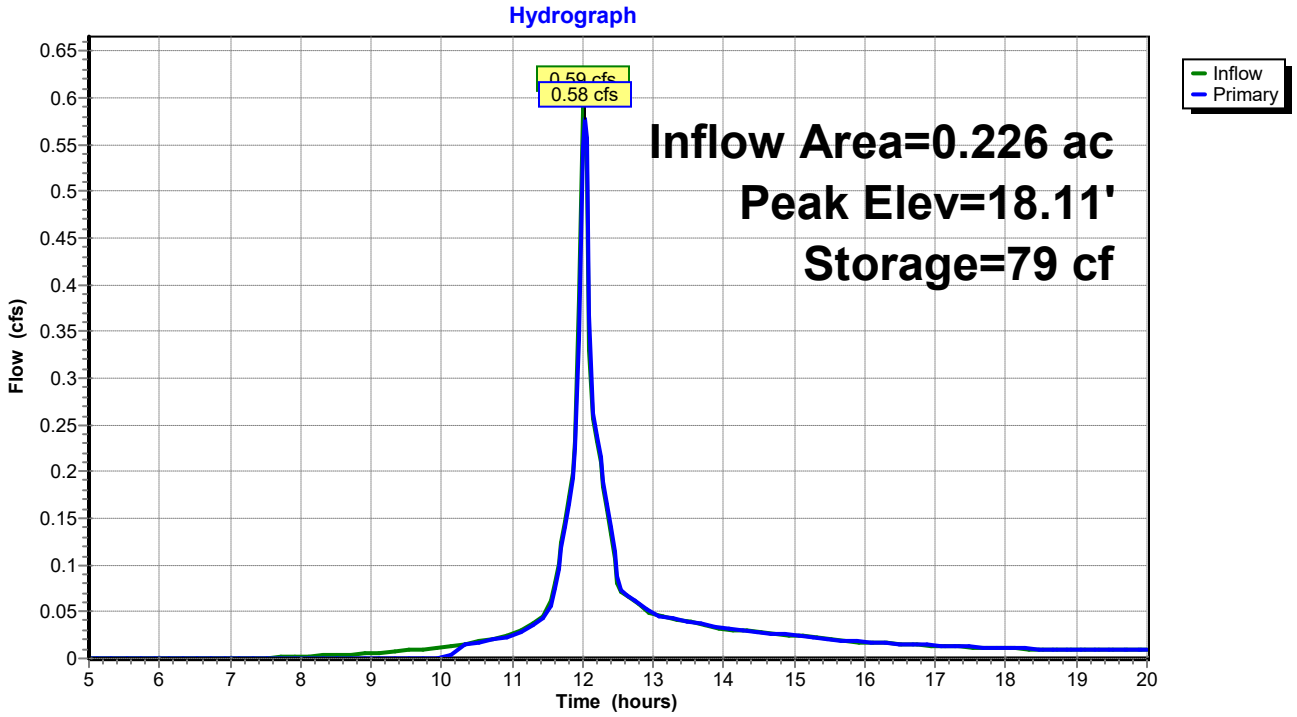

Summary for Pond 2P: CB-1

Inflow Area = 0.226 ac, 50.01% Impervious, Inflow Depth > 1.81" for 2-yr event
Inflow = 0.58 cfs @ 12.03 hrs, Volume= 0.034 af
Outflow = 0.58 cfs @ 12.03 hrs, Volume= 0.034 af, Atten= 0%, Lag= 0.0 min
Primary = 0.58 cfs @ 12.03 hrs, Volume= 0.034 af
Routed to Reach 1R : Reach 1

Routing by Stor-Ind method, Time Span= 5.00-20.00 hrs, dt= 0.05 hrs
Peak Elev= 14.15' @ 12.03 hrs

Device	Routing	Invert	Outlet Devices
#1	Primary	13.75'	**15.0" Round Culvert** L= 48.0' CPP, projecting, no headwall, Ke= 0.900 Inlet / Outlet Invert= 13.75' / 12.00' S= 0.0365 '/' Cc= 0.900 n= 0.013 Corrugated PE, smooth interior, Flow Area= 1.23 sf

Primary OutFlow Max=0.55 cfs @ 12.03 hrs HW=14.14' (Free Discharge)
1=Culvert (Inlet Controls 0.55 cfs @ 1.68 fps)

Pond 2P: CB-1

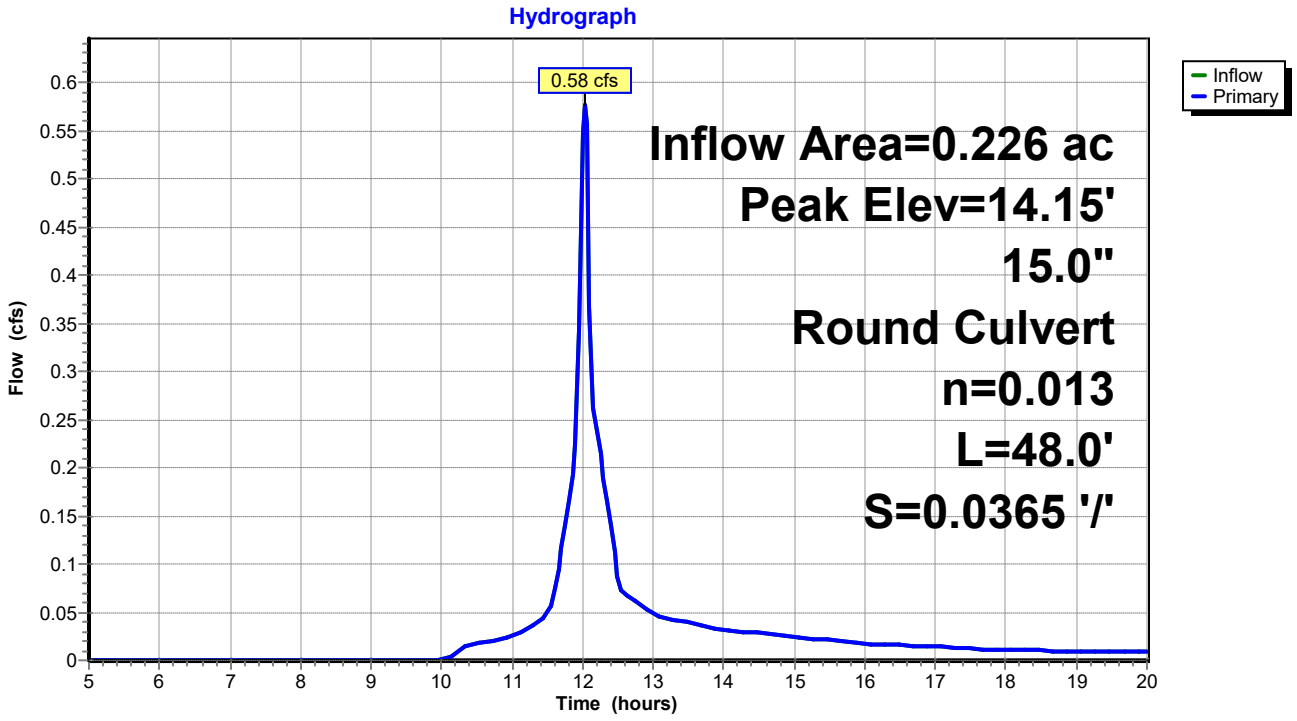

Summary for Pond 3P: Bioretention Filter Cell 2

Inflow Area = 0.307 ac, 33.49% Impervious, Inflow Depth > 1.65" for 2-yr event
Inflow = 0.64 cfs @ 12.08 hrs, Volume= 0.042 af
Outflow = 0.64 cfs @ 12.09 hrs, Volume= 0.041 af, Atten= 0%, Lag= 0.7 min
Primary = 0.64 cfs @ 12.09 hrs, Volume= 0.041 af
Routed to Pond 4P : CB-2

Routing by Stor-Ind method, Time Span= 5.00-20.00 hrs, dt= 0.05 hrs
Peak Elev= 23.62' @ 12.09 hrs Surf.Area= 208 sf Storage= 64 cf

Plug-Flow detention time= 14.5 min calculated for 0.041 af (97% of inflow)
Center-of-Mass det. time= 5.7 min (797.0 - 791.3)

Volume	Invert	Avail.Storage	Storage Description
#1	23.00'	380 cf	**Custom Stage Data (Prismatic)** Listed below (Recalc)

Elevation (feet)	Surf.Area (sq-ft)	Inc.Store (cubic-feet)	Cum.Store (cubic-feet)
23.00	0	0	0
24.00	335	168	168
24.50	515	213	380

Device	Routing	Invert	Outlet Devices
#1	Primary	23.50'	**18.0" Horiz. Orifice/Grate** C= 0.600 in 24.0" Grate (56% open area) Limited to weir flow at low heads

Primary OutFlow Max=0.62 cfs @ 12.09 hrs HW=23.62' (Free Discharge)
↑**1=Orifice/Grate** (Weir Controls 0.62 cfs @ 1.12 fps)

Pond 3P: Bioretention Filter Cell 2

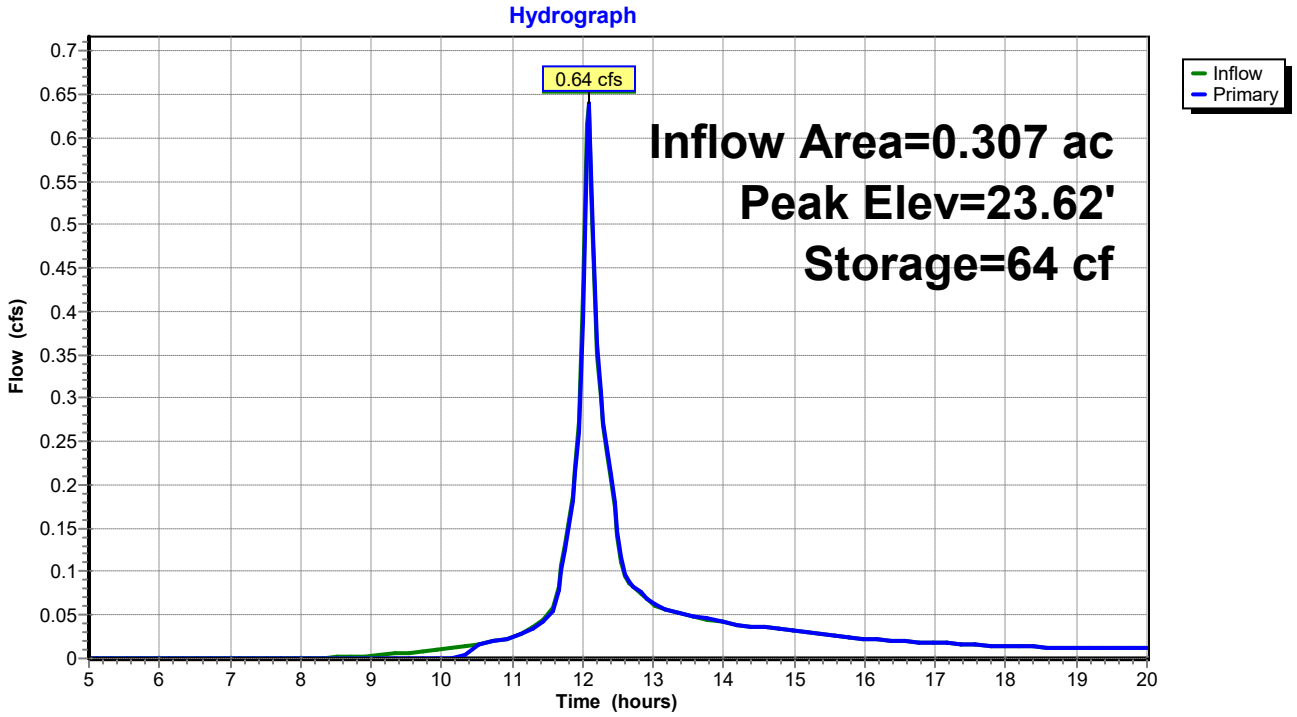

Summary for Pond 4P: CB-2

Inflow Area = 0.307 ac, 33.49% Impervious, Inflow Depth > 1.61" for 2-yr event
Inflow = 0.64 cfs @ 12.09 hrs, Volume= 0.041 af
Outflow = 0.64 cfs @ 12.09 hrs, Volume= 0.041 af, Atten= 0%, Lag= 0.0 min
Primary = 0.64 cfs @ 12.09 hrs, Volume= 0.041 af
Routed to Pond 5P : Level Lip Speader

Routing by Stor-Ind method, Time Span= 5.00-20.00 hrs, dt= 0.05 hrs
Peak Elev= 19.15' @ 12.09 hrs

Device	Routing	Invert	Outlet Devices
#1	Primary	18.75'	**18.0" Round Culvert** L= 40.0' CPP, projecting, no headwall, Ke= 0.900 Inlet / Outlet Invert= 18.75' / 18.00' S= 0.0187 '/' Cc= 0.900 n= 0.013 Corrugated PE, smooth interior, Flow Area= 1.77 sf

Primary OutFlow Max=0.62 cfs @ 12.09 hrs HW=19.14' (Free Discharge)
1=Culvert (Inlet Controls 0.62 cfs @ 1.69 fps)

Pond 4P: CB-2

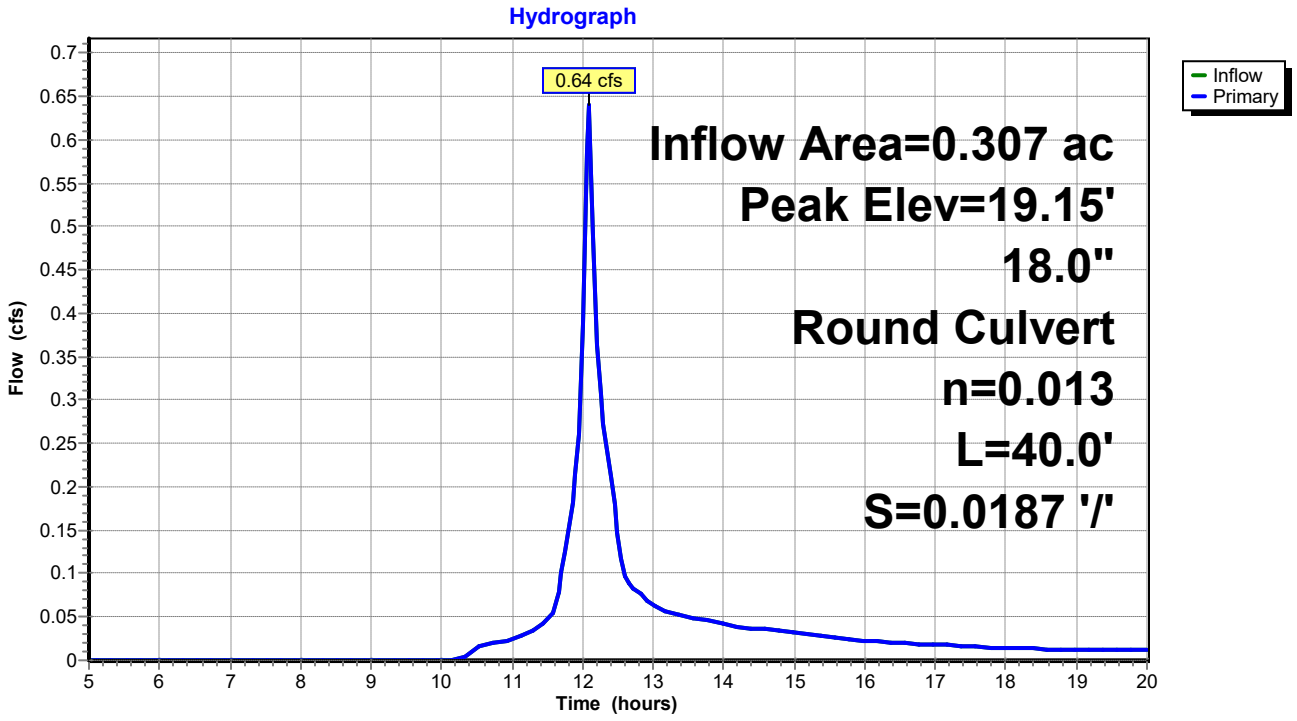

Summary for Pond 5P: Level Lip Speader

Inflow Area = 0.307 ac, 33.49% Impervious, Inflow Depth > 1.61" for 2-yr event
Inflow = 0.64 cfs @ 12.09 hrs, Volume= 0.041 af
Outflow = 0.61 cfs @ 12.11 hrs, Volume= 0.038 af, Atten= 4%, Lag= 1.4 min
Primary = 0.61 cfs @ 12.11 hrs, Volume= 0.038 af
Routed to Reach 2R : Reach 2

Routing by Stor-Ind method, Time Span= 5.00-20.00 hrs, dt= 0.05 hrs
Peak Elev= 18.00' @ 11.60 hrs Surf.Area= 168 sf Storage= 115 cf
Flood Elev= 20.00' Surf.Area= 168 sf Storage= 115 cf

Plug-Flow detention time= 32.2 min calculated for 0.038 af (93% of inflow)
Center-of-Mass det. time= 10.2 min (807.2 - 797.0)

Volume	Invert	Avail.Storage	Storage Description
#1	17.00'	115 cf	**Custom Stage Data (Prismatic)** Listed below (Recalc)

Elevation (feet)	Surf.Area (sq-ft)	Voids (%)	Inc.Store (cubic-feet)	Cum.Store (cubic-feet)
17.00	61	0.0	0	0
18.00	168	100.0	115	115

Device	Routing	Invert	Outlet Devices
#0	Primary	18.00'	**Automatic Storage Overflow** (Discharged without head)

Primary OutFlow Max=0.00 cfs @ 12.11 hrs HW=18.00' (Free Discharge)

Pond 5P: Level Lip Speader

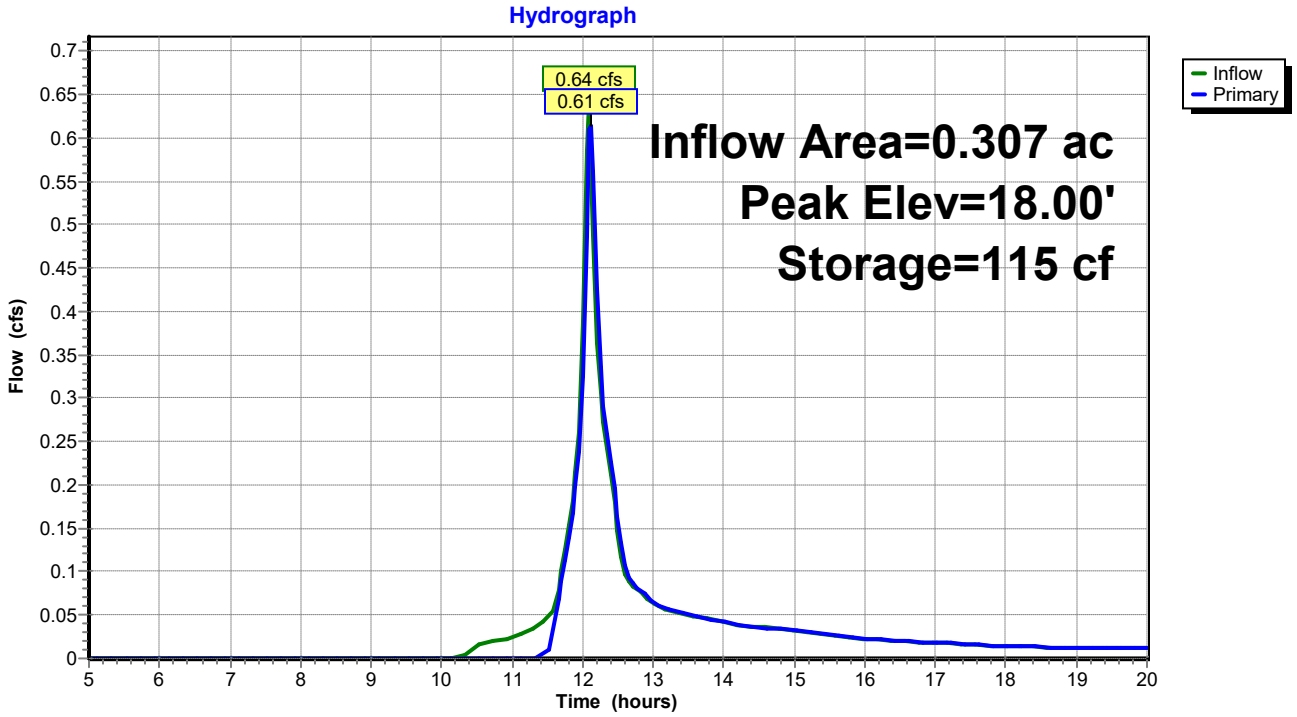

Summary for Link DP1: DP1

Inflow Area = 0.489 ac, 28.87% Impervious, Inflow Depth > 1.54" for 2-yr event
Inflow = 1.02 cfs @ 12.04 hrs, Volume= 0.063 af
Primary = 1.02 cfs @ 12.04 hrs, Volume= 0.063 af, Atten= 0%, Lag= 0.0 min
Routed to Reach SP1 : SACO RIVER / OCEAN

Primary outflow = Inflow, Time Span= 5.00-20.00 hrs, dt= 0.05 hrs

Link DP1: DP1

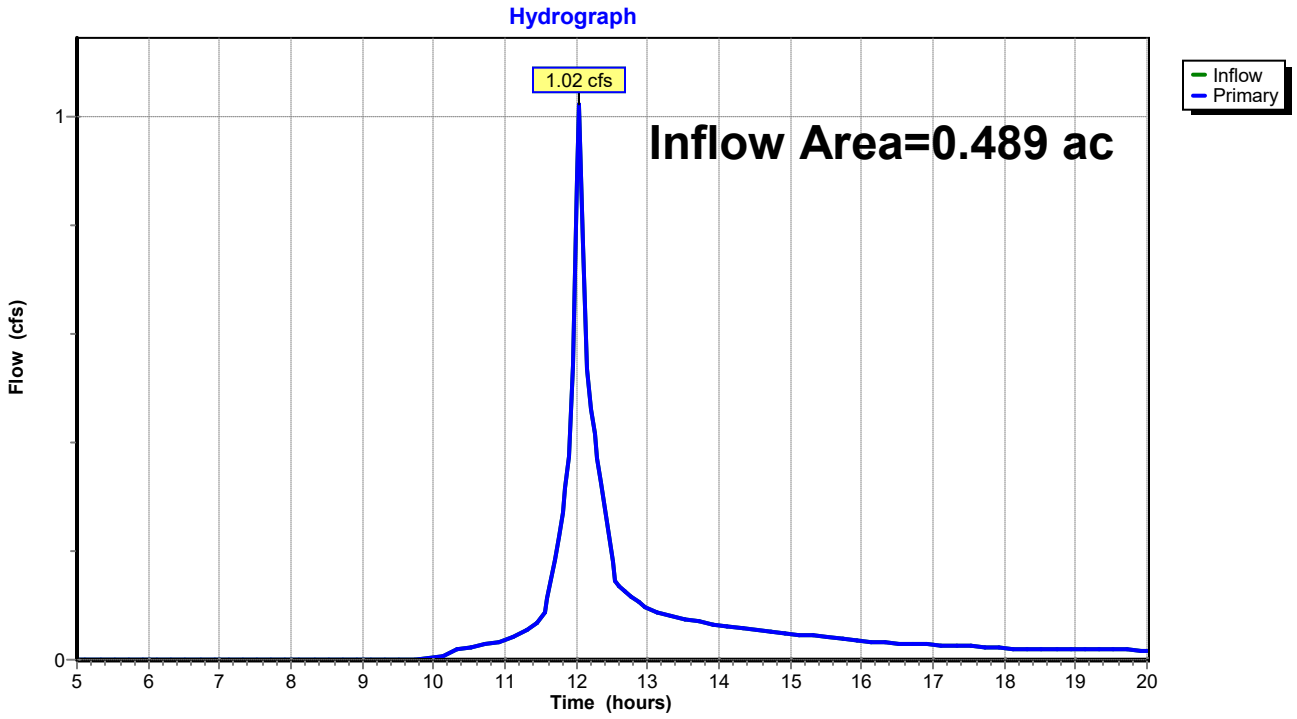

Summary for Link DP2: DP2

Inflow Area = 0.709 ac, 15.44% Impervious, Inflow Depth > 1.39" for 2-yr event
Inflow = 1.24 cfs @ 12.11 hrs, Volume= 0.082 af
Primary = 1.24 cfs @ 12.11 hrs, Volume= 0.082 af, Atten= 0%, Lag= 0.0 min
Routed to Reach SP1 : SACO RIVER / OCEAN

Primary outflow = Inflow, Time Span= 5.00-20.00 hrs, dt= 0.05 hrs

Link DP2: DP2

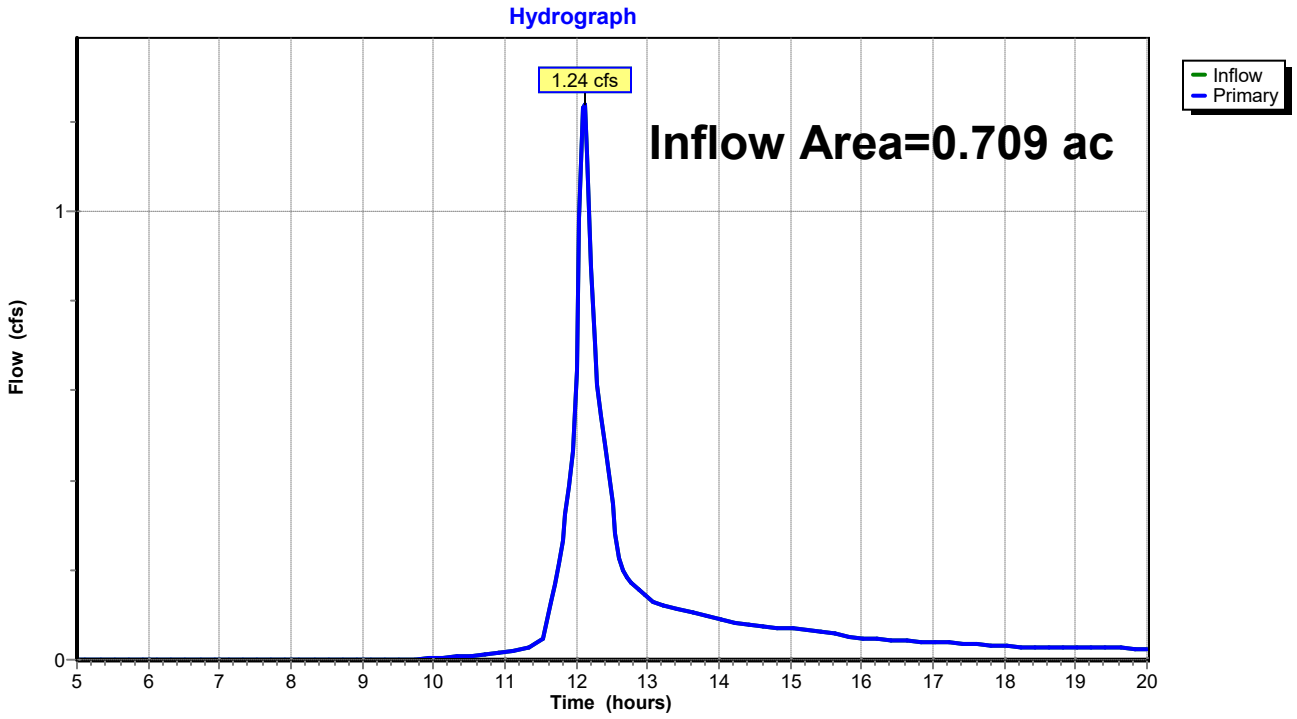

Time span=5.00-20.00 hrs, dt=0.05 hrs, 301 points
Runoff by SCS TR-20 method, UH=SCS, Weighted-CN
Reach routing by Stor-Ind method - Pond routing by Stor-Ind method

Subcatchment 1S: Post Subcatchment 1 Runoff Area=9,832 sf 50.01% Impervious Runoff Depth>3.28"
Flow Length=172' Tc=0.8 min CN=87 Runoff=1.02 cfs 0.062 af

Subcatchment 2S: Post Subcatchment 2 Runoff Area=11,488 sf 10.78% Impervious Runoff Depth>2.53"
Flow Length=133' Tc=3.4 min CN=79 Runoff=0.90 cfs 0.056 af

Subcatchment 3S: Post Subcatchment 3 Runoff Area=13,365 sf 33.49% Impervious Runoff Depth>2.98"
Flow Length=262' Tc=4.9 min CN=84 Runoff=1.15 cfs 0.076 af

Subcatchment 4S: Post Subcatchment 4 Runoff Area=17,529 sf 1.68% Impervious Runoff Depth>2.53"
Flow Length=126' Tc=7.2 min CN=79 Runoff=1.21 cfs 0.085 af

Subcatchment 5S: Post Subcatchment 5 Runoff Area=59,179 sf 4.06% Impervious Runoff Depth>2.62"
Flow Length=445' Tc=7.0 min CN=80 Runoff=4.26 cfs 0.297 af

Reach 1R: Reach 1 Inflow=0.99 cfs 0.060 af
Outflow=0.99 cfs 0.060 af

Reach 2R: Reach 2 Inflow=1.10 cfs 0.073 af
Outflow=1.10 cfs 0.073 af

Reach DP3: Shoreline 3 Inflow=4.26 cfs 0.297 af
Outflow=4.26 cfs 0.297 af

Reach SP1: SACO RIVER / OCEAN Inflow=7.94 cfs 0.570 af
Outflow=7.94 cfs 0.570 af

Pond 1P: Bioretention Filter Cell 1 Peak Elev=18.16' Storage=92 cf Inflow=1.02 cfs 0.062 af
Outflow=0.99 cfs 0.060 af

Pond 2P: CB-1 Peak Elev=14.29' Inflow=0.99 cfs 0.060 af
15.0" Round Culvert n=0.013 L=48.0' S=0.0365 '/' Outflow=0.99 cfs 0.060 af

Pond 3P: Bioretention Filter Cell 2 Peak Elev=23.68' Storage=77 cf Inflow=1.15 cfs 0.076 af
Outflow=1.14 cfs 0.075 af

Pond 4P: CB-2 Peak Elev=19.29' Inflow=1.14 cfs 0.075 af
18.0" Round Culvert n=0.013 L=40.0' S=0.0187 '/' Outflow=1.14 cfs 0.075 af

Pond 5P: Level Lip Speader Peak Elev=18.00' Storage=115 cf Inflow=1.14 cfs 0.075 af
Outflow=1.10 cfs 0.073 af

Link DP1: DP1 Inflow=1.85 cfs 0.116 af
Primary=1.85 cfs 0.116 af

Link DP2: DP2 Inflow=2.31 cfs 0.158 af
Primary=2.31 cfs 0.158 af

Total Runoff Area = 2.557 ac Runoff Volume = 0.575 af Average Runoff Depth = 2.70"
88.04% Pervious = 2.251 ac 11.96% Impervious = 0.306 ac

Summary for Subcatchment 1S: Post Subcatchment 1

Runoff = 1.02 cfs @ 12.01 hrs, Volume= 0.062 af, Depth> 3.28"
Routed to Pond 1P : Bioretention Filter Cell 1

Runoff by SCS TR-20 method, UH=SCS, Weighted-CN, Time Span= 5.00-20.00 hrs, dt= 0.05 hrs
Type III 24-hr 10-yr Rainfall=4.90"

	Area (sf)	CN	Description
	3,430	77	Woods, Good, HSG D
*	982	98	Ledge, HSG D
	595	80	>75% Grass cover, Good, HSG D
*	3,935	98	Paved Access Drive, HSG D
*	890	73	Bioretention Filter Cell, Good, HSG D
	9,832	87	Weighted Average
	4,915		49.99% Pervious Area
	4,917		50.01% Impervious Area

Tc (min)	Length (feet)	Slope (ft/ft)	Velocity (ft/sec)	Capacity (cfs)	Description
0.4	46	0.0500	1.73		**Sheet Flow, Tc-1** Smooth surfaces n= 0.011 P2= 3.30"
0.3	102	0.0500	5.25	15.74	**Channel Flow, Tc-2** Area= 3.0 sf Perim= 9.2' r= 0.33' n= 0.030 Earth, grassed & winding
0.1	24	0.0625	3.75		**Shallow Concentrated Flow, Tc-3** Grassed Waterway Kv= 15.0 fps
0.8	172	Total			

Subcatchment 1S: Post Subcatchment 1

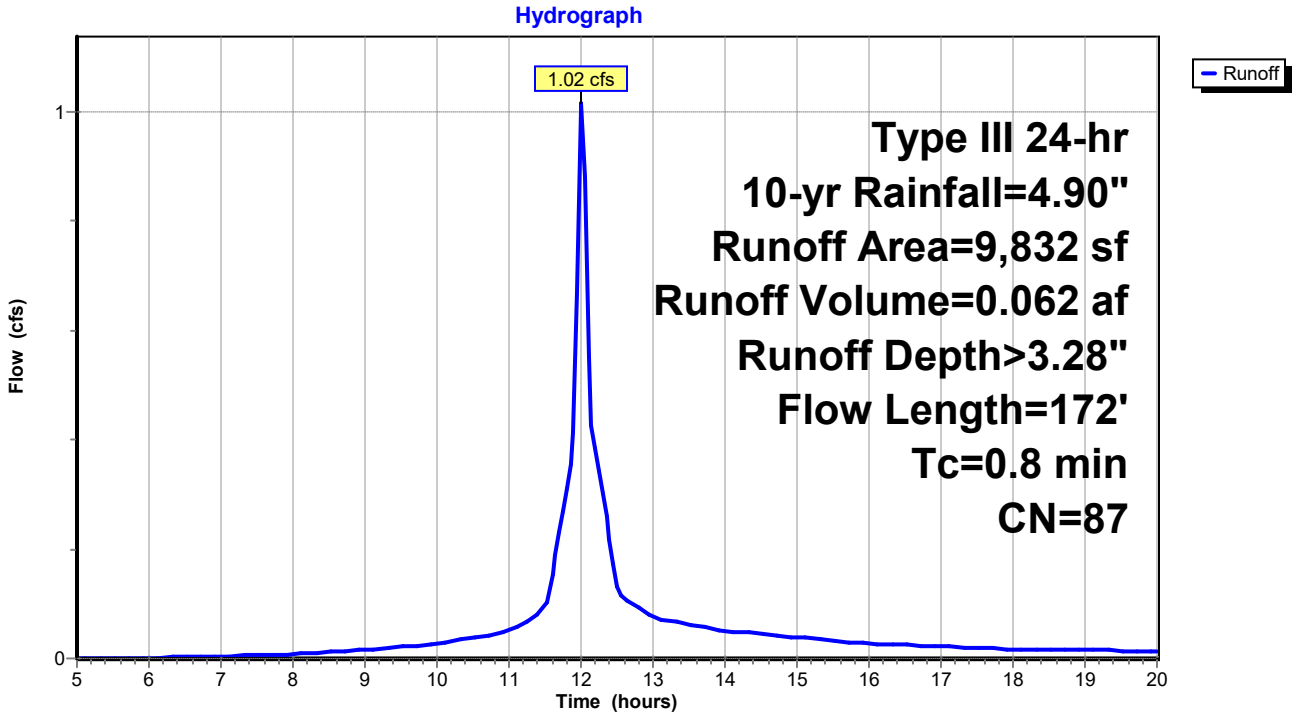

Summary for Subcatchment 2S: Post Subcatchment 2

Runoff = 0.90 cfs @ 12.06 hrs, Volume= 0.056 af, Depth> 2.53"
Routed to Link DP1 : DP1

Runoff by SCS TR-20 method, UH=SCS, Weighted-CN, Time Span= 5.00-20.00 hrs, dt= 0.05 hrs
Type III 24-hr 10-yr Rainfall=4.90"

Area (sf)	CN	Description
10,250	77	Woods, Good, HSG D
1,238	98	Paved parking, HSG D
11,488	79	Weighted Average
10,250		89.22% Pervious Area
1,238		10.78% Impervious Area

Tc (min)	Length (feet)	Slope (ft/ft)	Velocity (ft/sec)	Capacity (cfs)	Description
2.5	21	0.1905	0.14		**Sheet Flow, Tc-1** Woods: Light underbrush n= 0.400 P2= 3.30"
0.9	112	0.1696	2.06		**Shallow Concentrated Flow, Tc-2** Woodland Kv= 5.0 fps
3.4	133	Total			

Subcatchment 2S: Post Subcatchment 2

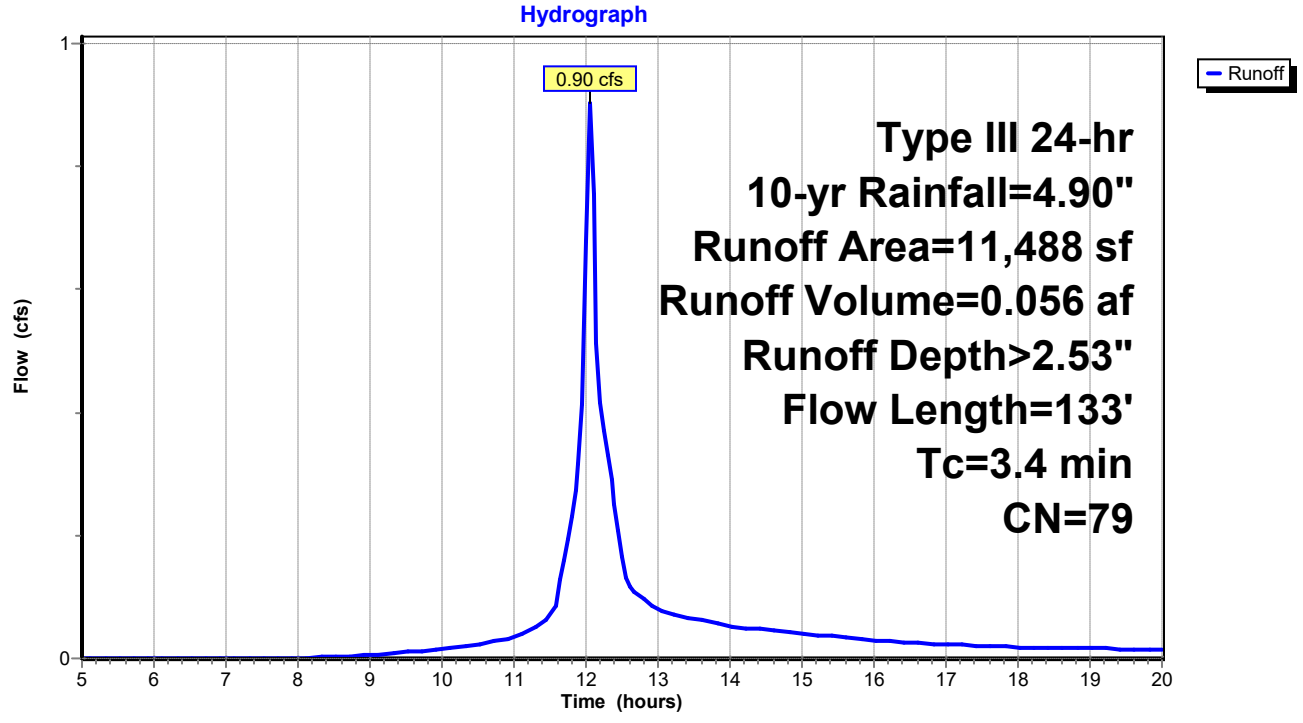

Summary for Subcatchment 3S: Post Subcatchment 3

Runoff = 1.15 cfs @ 12.07 hrs, Volume= 0.076 af, Depth> 2.98"
Routed to Pond 3P : Bioretention Filter Cell 2

Runoff by SCS TR-20 method, UH=SCS, Weighted-CN, Time Span= 5.00-20.00 hrs, dt= 0.05 hrs
Type III 24-hr 10-yr Rainfall=4.90"

	Area (sf)	CN	Description
	6,822	77	Woods, Good, HSG D
*	580	73	Biofiltration cell, Good, HSG D
*	3,768	98	Paved access drive, HSG D
	1,487	80	>75% Grass cover, Good, HSG D
*	708	98	Ledge, HSG D
	13,365	84	Weighted Average
	8,889		66.51% Pervious Area
	4,476		33.49% Impervious Area

Tc (min)	Length (feet)	Slope (ft/ft)	Velocity (ft/sec)	Capacity (cfs)	Description
4.2	43	0.2093	0.17		**Sheet Flow, Tc-1** Woods: Light underbrush n= 0.400 P2= 3.30"
0.7	214	0.0500	5.25	15.74	**Channel Flow, Tc-2** Area= 3.0 sf Perim= 9.2' r= 0.33' n= 0.030 Earth, grassed & winding
0.0	5	0.0500	3.35		**Shallow Concentrated Flow, Tc-3** Grassed Waterway Kv= 15.0 fps
4.9	262	Total			

Subcatchment 3S: Post Subcatchment 3

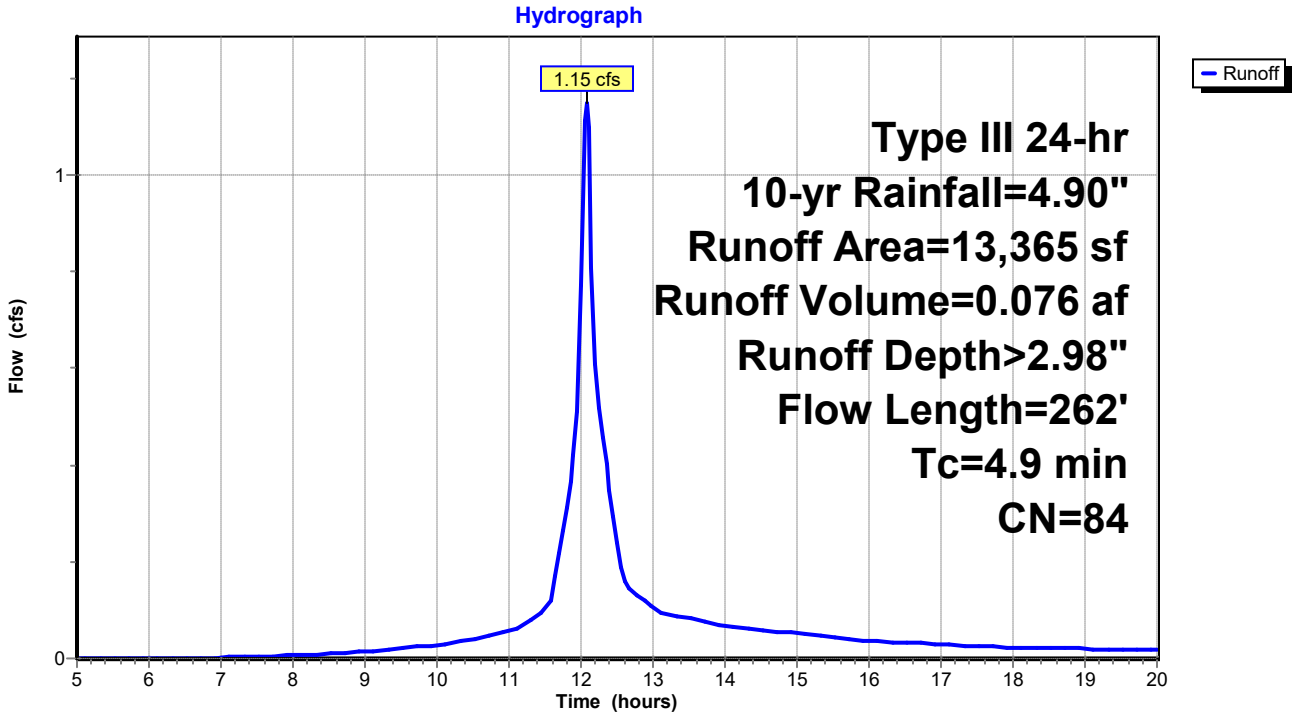

Summary for Subcatchment 4S: Post Subcatchment 4

Runoff = 1.21 cfs @ 12.11 hrs, Volume= 0.085 af, Depth> 2.53"
Routed to Link DP2 : DP2

Runoff by SCS TR-20 method, UH=SCS, Weighted-CN, Time Span= 5.00-20.00 hrs, dt= 0.05 hrs
Type III 24-hr 10-yr Rainfall=4.90"

	Area (sf)	CN	Description
*	295	98	Paved access drive, HSG D
	1,450	80	>75% Grass cover, Good, HSG D
	15,784	79	Woods, Fair, HSG D
	17,529	79	Weighted Average
	17,234		98.32% Pervious Area
	295		1.68% Impervious Area

Tc (min)	Length (feet)	Slope (ft/ft)	Velocity (ft/sec)	Capacity (cfs)	Description
6.8	62	0.1290	0.15		**Sheet Flow, Tc-1** Woods: Light underbrush n= 0.400 P2= 3.30"
0.4	64	0.2343	2.42		**Shallow Concentrated Flow, Tc-2** Woodland Kv= 5.0 fps
7.2	126	Total			

Subcatchment 4S: Post Subcatchment 4

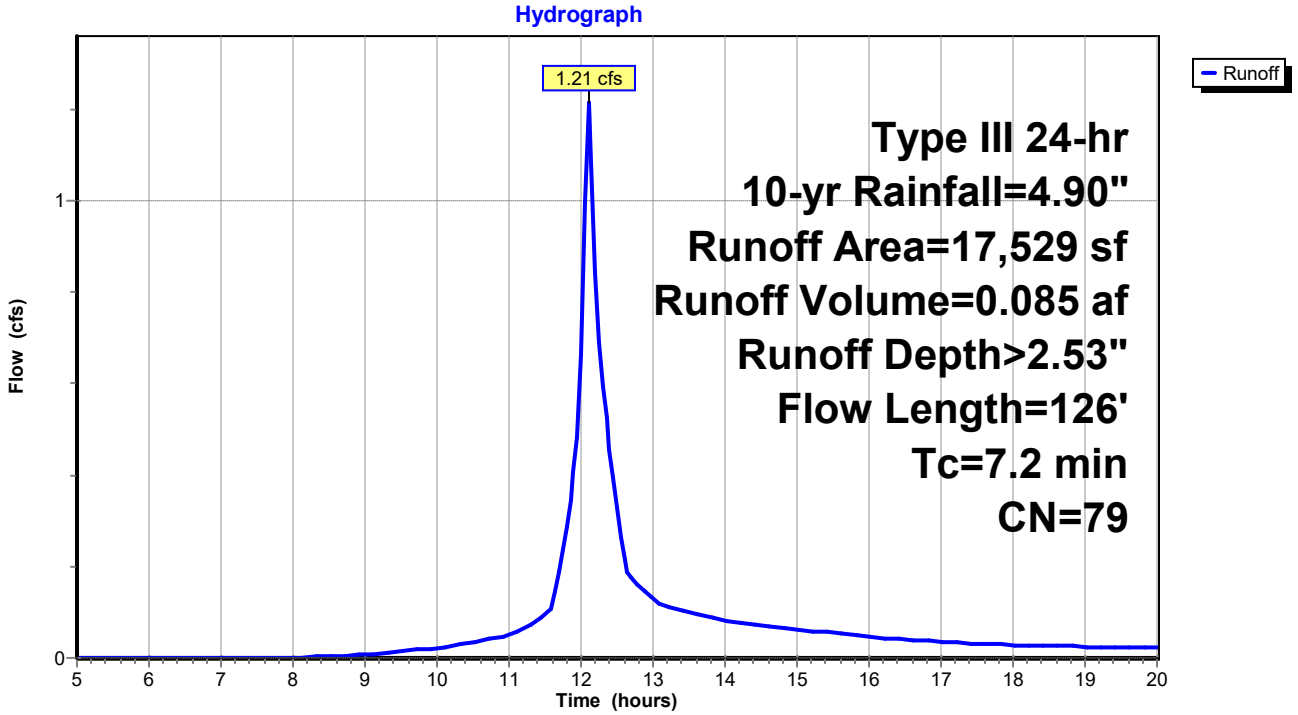

Summary for Subcatchment 5S: Post Subcatchment 5

Runoff = 4.26 cfs @ 12.10 hrs, Volume= 0.297 af, Depth> 2.62"
Routed to Reach DP3 : Shoreline 3

Runoff by SCS TR-20 method, UH=SCS, Weighted-CN, Time Span= 5.00-20.00 hrs, dt= 0.05 hrs
Type III 24-hr 10-yr Rainfall=4.90"

	Area (sf)	CN	Description
*	1,650	98	Paved acccess drive, HSG D
	751	98	Roofs, HSG D
*	6,955	88	Sand beach, HSG D
	3,872	96	Gravel surface, HSG D
	45,951	77	Woods, Good, HSG D
	59,179	80	Weighted Average
	56,778		95.94% Pervious Area
	2,401		4.06% Impervious Area

Tc (min)	Length (feet)	Slope (ft/ft)	Velocity (ft/sec)	Capacity (cfs)	Description
2.7	23	0.1740	0.14		**Sheet Flow, Tc-1** Woods: Light underbrush n= 0.400 P2= 3.30"
1.0	70	0.0574	1.20		**Shallow Concentrated Flow, Tc-2** Woodland Kv= 5.0 fps
0.5	170	0.1059	5.24		**Shallow Concentrated Flow, Tc-3** Unpaved Kv= 16.1 fps
2.5	140	0.0357	0.94		**Shallow Concentrated Flow, Tc-4** Woodland Kv= 5.0 fps
0.3	42	0.0714	2.67		**Shallow Concentrated Flow, Tc-5** Nearly Bare & Untilled Kv= 10.0 fps
7.0	445	Total			

Subcatchment 5S: Post Subcatchment 5

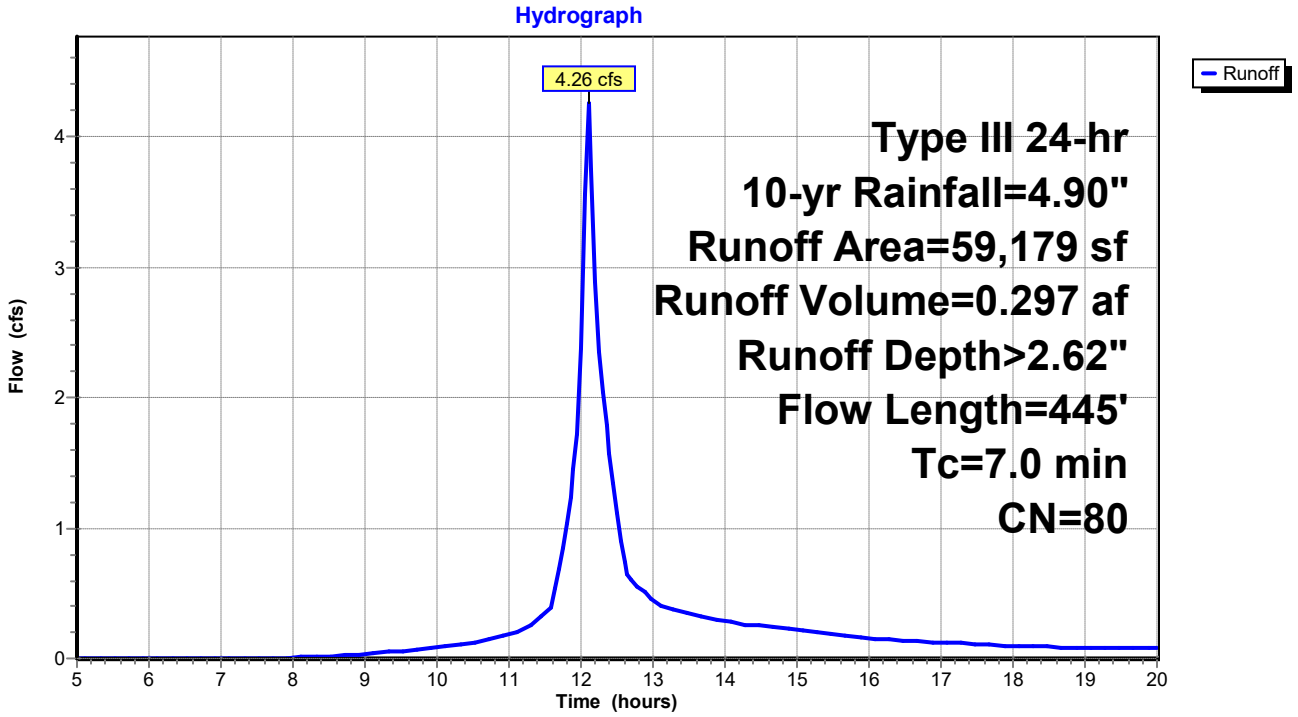

Summary for Reach 1R: Reach 1

Inflow Area = 0.226 ac, 50.01% Impervious, Inflow Depth > 3.21" for 10-yr event
Inflow = 0.99 cfs @ 12.02 hrs, Volume= 0.060 af
Outflow = 0.99 cfs @ 12.02 hrs, Volume= 0.060 af, Atten= 0%, Lag= 0.0 min
Routed to Link DP1 : DP1

Routing by Stor-Ind method, Time Span= 5.00-20.00 hrs, dt= 0.05 hrs

Reach 1R: Reach 1

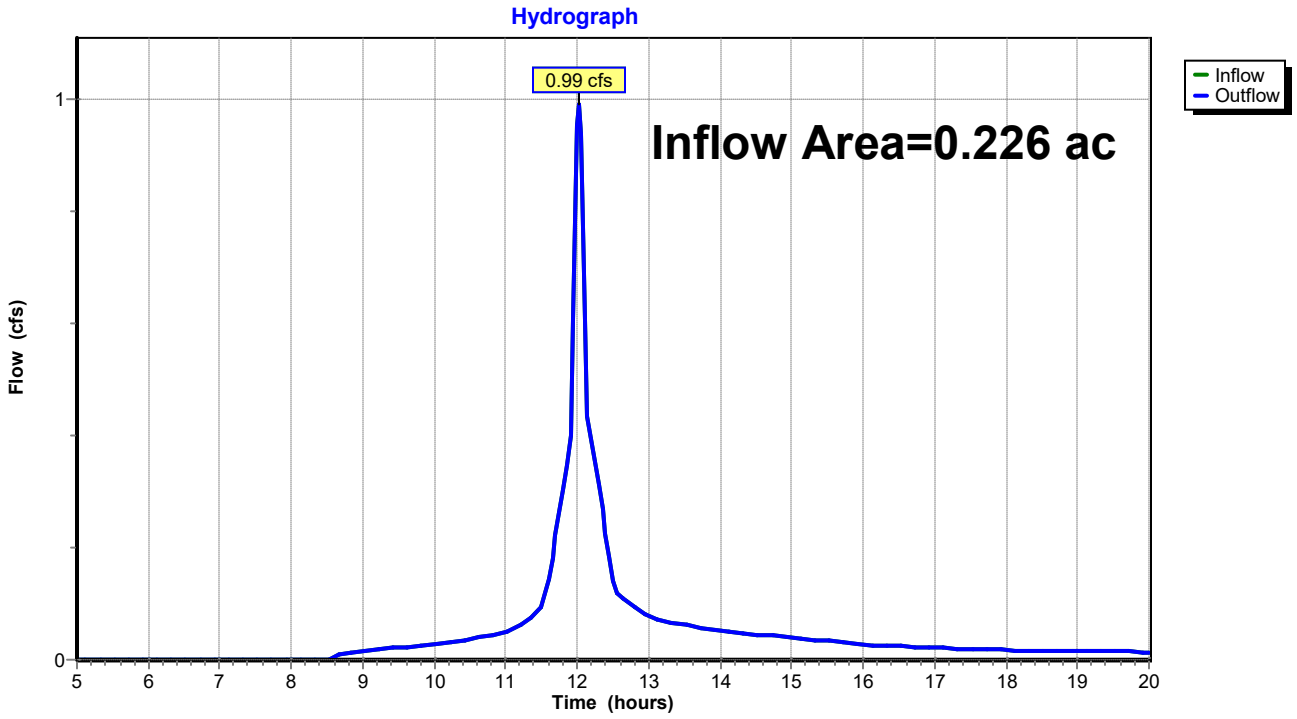

Summary for Reach 2R: Reach 2

Inflow Area = 0.307 ac, 33.49% Impervious, Inflow Depth > 2.84" for 10-yr event
Inflow = 1.10 cfs @ 12.11 hrs, Volume= 0.073 af
Outflow = 1.10 cfs @ 12.11 hrs, Volume= 0.073 af, Atten= 0%, Lag= 0.0 min
Routed to Link DP2 : DP2

Routing by Stor-Ind method, Time Span= 5.00-20.00 hrs, dt= 0.05 hrs

Reach 2R: Reach 2

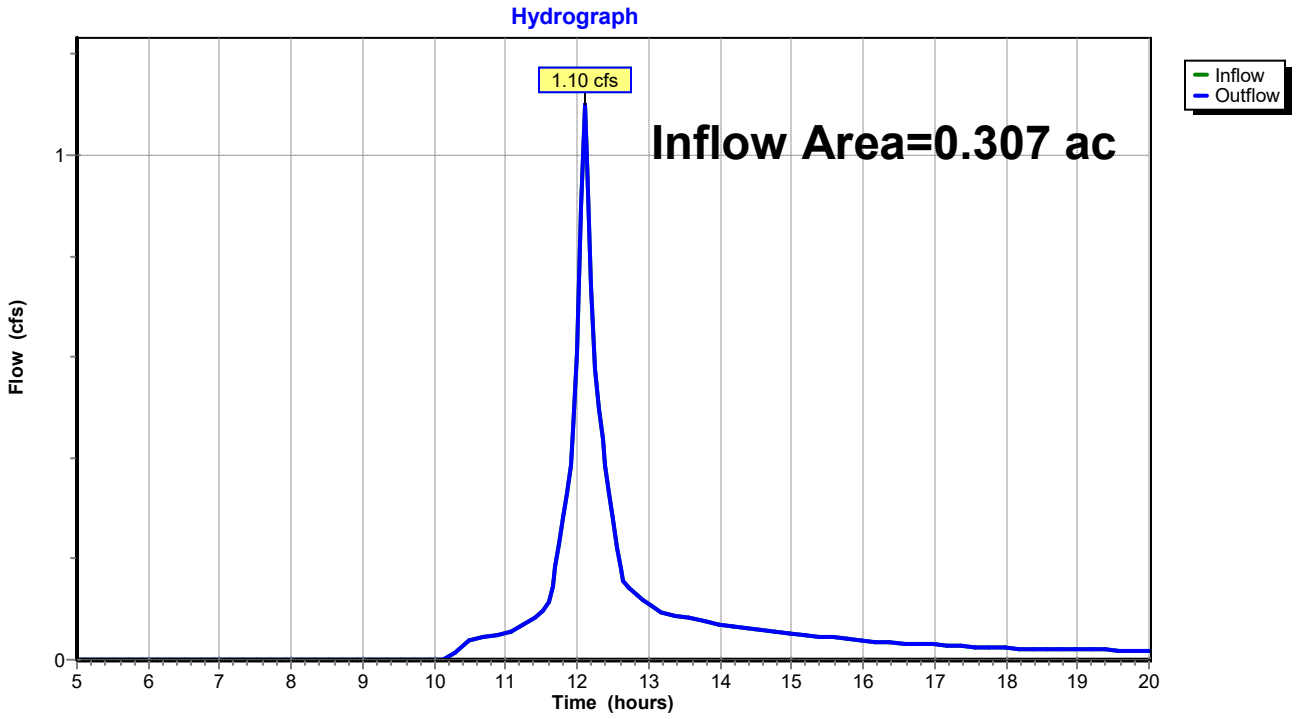

Summary for Reach DP3: Shoreline 3

Inflow Area = 1.359 ac, 4.06% Impervious, Inflow Depth > 2.62" for 10-yr event
Inflow = 4.26 cfs @ 12.10 hrs, Volume= 0.297 af
Outflow = 4.26 cfs @ 12.10 hrs, Volume= 0.297 af, Atten= 0%, Lag= 0.0 min
Routed to Reach SP1 : SACO RIVER / OCEAN

Routing by Stor-Ind method, Time Span= 5.00-20.00 hrs, dt= 0.05 hrs

Reach DP3: Shoreline 3

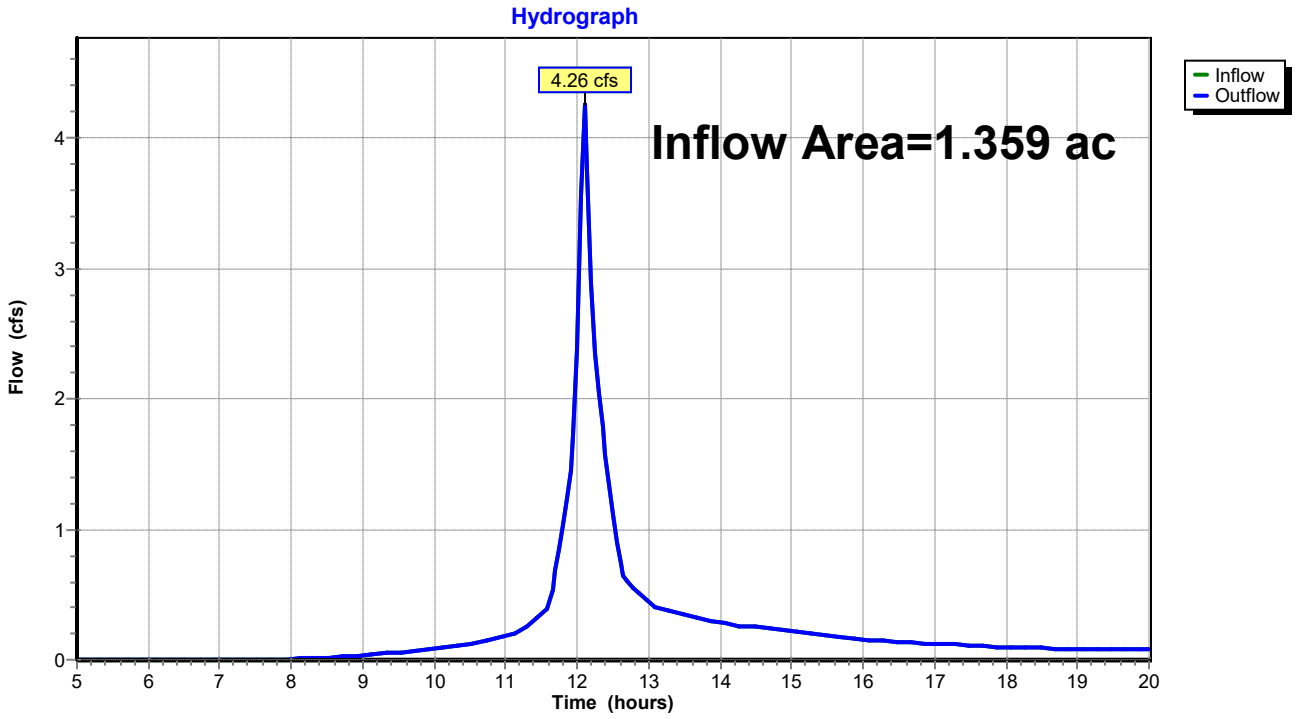

Summary for Reach SP1: SACO RIVER / OCEAN

Inflow Area = 2.557 ac, 11.96% Impervious, Inflow Depth > 2.68" for 10-yr event
Inflow = 7.94 cfs @ 12.09 hrs, Volume= 0.570 af
Outflow = 7.94 cfs @ 12.09 hrs, Volume= 0.570 af, Atten= 0%, Lag= 0.0 min

Routing by Stor-Ind method, Time Span= 5.00-20.00 hrs, dt= 0.05 hrs

Reach SP1: SACO RIVER / OCEAN

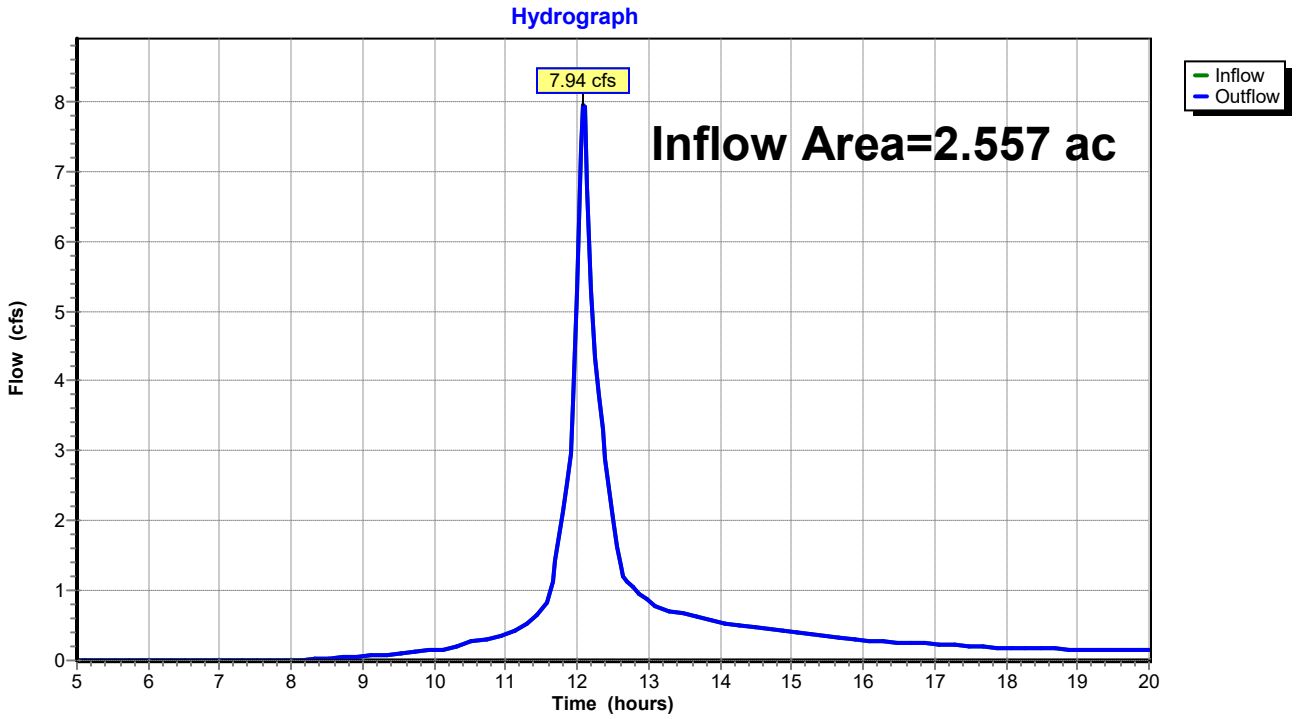

Summary for Pond 1P: Bioretention Filter Cell 1

Inflow Area = 0.226 ac, 50.01% Impervious, Inflow Depth > 3.28" for 10-yr event
Inflow = 1.02 cfs @ 12.01 hrs, Volume= 0.062 af
Outflow = 0.99 cfs @ 12.02 hrs, Volume= 0.060 af, Atten= 3%, Lag= 0.7 min
Primary = 0.99 cfs @ 12.02 hrs, Volume= 0.060 af
Routed to Pond 2P : CB-1

Routing by Stor-Ind method, Time Span= 5.00-20.00 hrs, dt= 0.05 hrs
Peak Elev= 18.16' @ 12.02 hrs Surf.Area= 264 sf Storage= 92 cf

Plug-Flow detention time= 15.2 min calculated for 0.060 af (98% of inflow)
Center-of-Mass det. time= 7.1 min (773.3 - 766.2)

Volume	Invert	Avail.Storage	Storage Description
#1	17.50'	200 cf	**Custom Stage Data (Prismatic)** Listed below (Recalc)

Elevation (feet)	Surf.Area (sq-ft)	Inc.Store (cubic-feet)	Cum.Store (cubic-feet)
17.50	0	0	0
18.00	213	53	53
18.50	372	146	200

Device	Routing	Invert	Outlet Devices
#1	Primary	18.00'	**18.0" Horiz. Orifice/Grate** C= 0.600 in 24.0" Grate (56% open area) Limited to weir flow at low heads

Primary OutFlow Max=0.94 cfs @ 12.02 hrs HW=18.16' (Free Discharge)
↑—**1=Orifice/Grate** (Weir Controls 0.94 cfs @ 1.29 fps)

Pond 1P: Bioretention Filter Cell 1

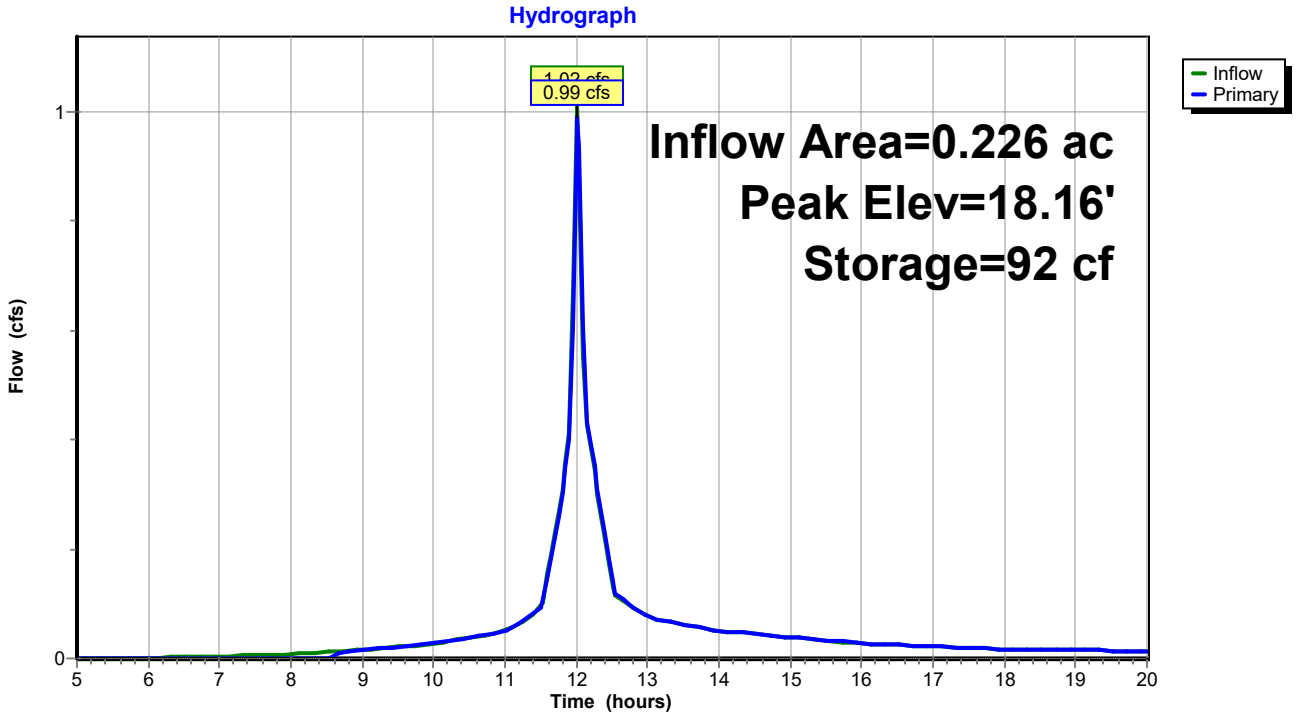

Summary for Pond 2P: CB-1

Inflow Area = 0.226 ac, 50.01% Impervious, Inflow Depth > 3.21" for 10-yr event
Inflow = 0.99 cfs @ 12.02 hrs, Volume= 0.060 af
Outflow = 0.99 cfs @ 12.02 hrs, Volume= 0.060 af, Atten= 0%, Lag= 0.0 min
Primary = 0.99 cfs @ 12.02 hrs, Volume= 0.060 af
Routed to Reach 1R : Reach 1

Routing by Stor-Ind method, Time Span= 5.00-20.00 hrs, dt= 0.05 hrs
Peak Elev= 14.29' @ 12.02 hrs

Device	Routing	Invert	Outlet Devices
#1	Primary	13.75'	**15.0" Round Culvert** L= 48.0' CPP, projecting, no headwall, Ke= 0.900 Inlet / Outlet Invert= 13.75' / 12.00' S= 0.0365 '/' Cc= 0.900 n= 0.013 Corrugated PE, smooth interior, Flow Area= 1.23 sf

Primary OutFlow Max=0.94 cfs @ 12.02 hrs HW=14.27' (Free Discharge)
1=Culvert (Inlet Controls 0.94 cfs @ 1.94 fps)

Pond 2P: CB-1

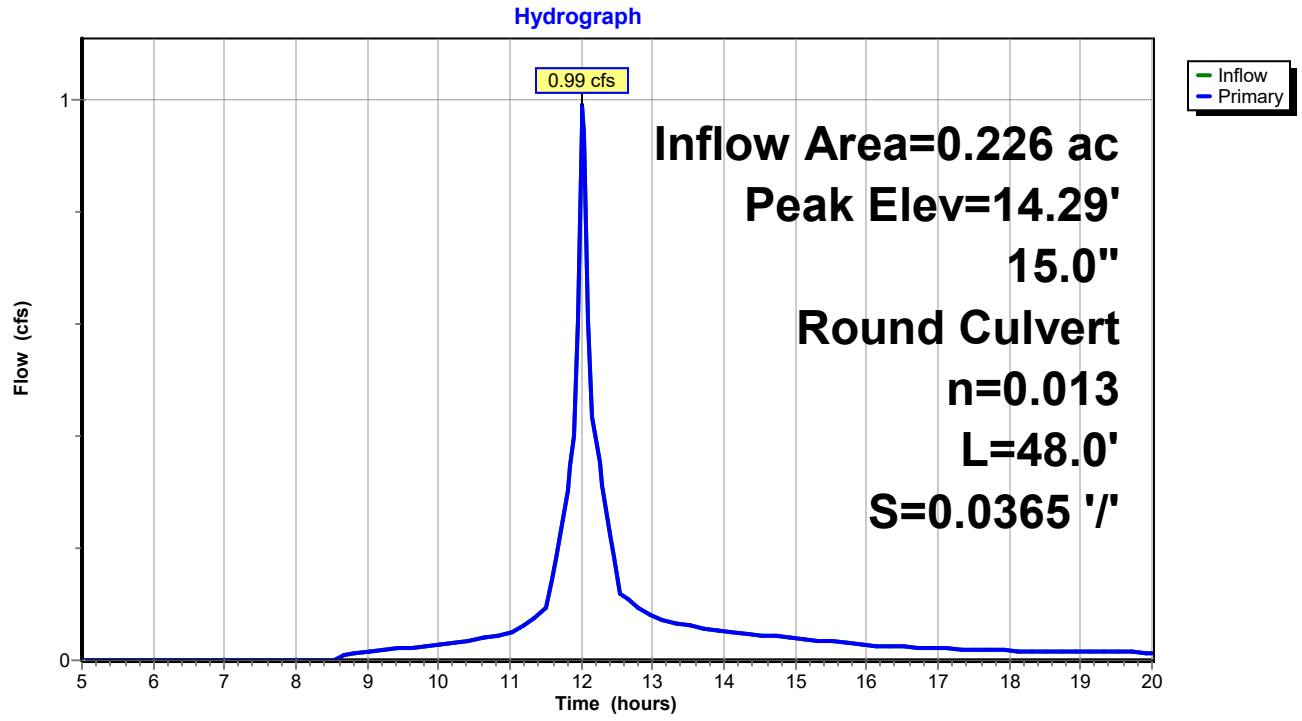

Summary for Pond 3P: Bioretention Filter Cell 2

Inflow Area = 0.307 ac, 33.49% Impervious, Inflow Depth > 2.98" for 10-yr event
Inflow = 1.15 cfs @ 12.07 hrs, Volume= 0.076 af
Outflow = 1.14 cfs @ 12.08 hrs, Volume= 0.075 af, Atten= 0%, Lag= 0.6 min
Primary = 1.14 cfs @ 12.08 hrs, Volume= 0.075 af
Routed to Pond 4P : CB-2

Routing by Stor-Ind method, Time Span= 5.00-20.00 hrs, dt= 0.05 hrs
Peak Elev= 23.68' @ 12.08 hrs Surf.Area= 227 sf Storage= 77 cf

Plug-Flow detention time= 9.5 min calculated for 0.075 af (98% of inflow)
Center-of-Mass det. time= 4.4 min (781.8 - 777.5)

Volume	Invert	Avail.Storage	Storage Description
#1	23.00'	380 cf	**Custom Stage Data (Prismatic)** Listed below (Recalc)

Elevation (feet)	Surf.Area (sq-ft)	Inc.Store (cubic-feet)	Cum.Store (cubic-feet)
23.00	0	0	0
24.00	335	168	168
24.50	515	213	380

Device	Routing	Invert	Outlet Devices
#1	Primary	23.50'	**18.0" Horiz. Orifice/Grate** C= 0.600 in 24.0" Grate (56% open area) Limited to weir flow at low heads

Primary OutFlow Max=1.11 cfs @ 12.08 hrs HW=23.67' (Free Discharge)
1=Orifice/Grate (Weir Controls 1.11 cfs @ 1.36 fps)

Pond 3P: Bioretention Filter Cell 2

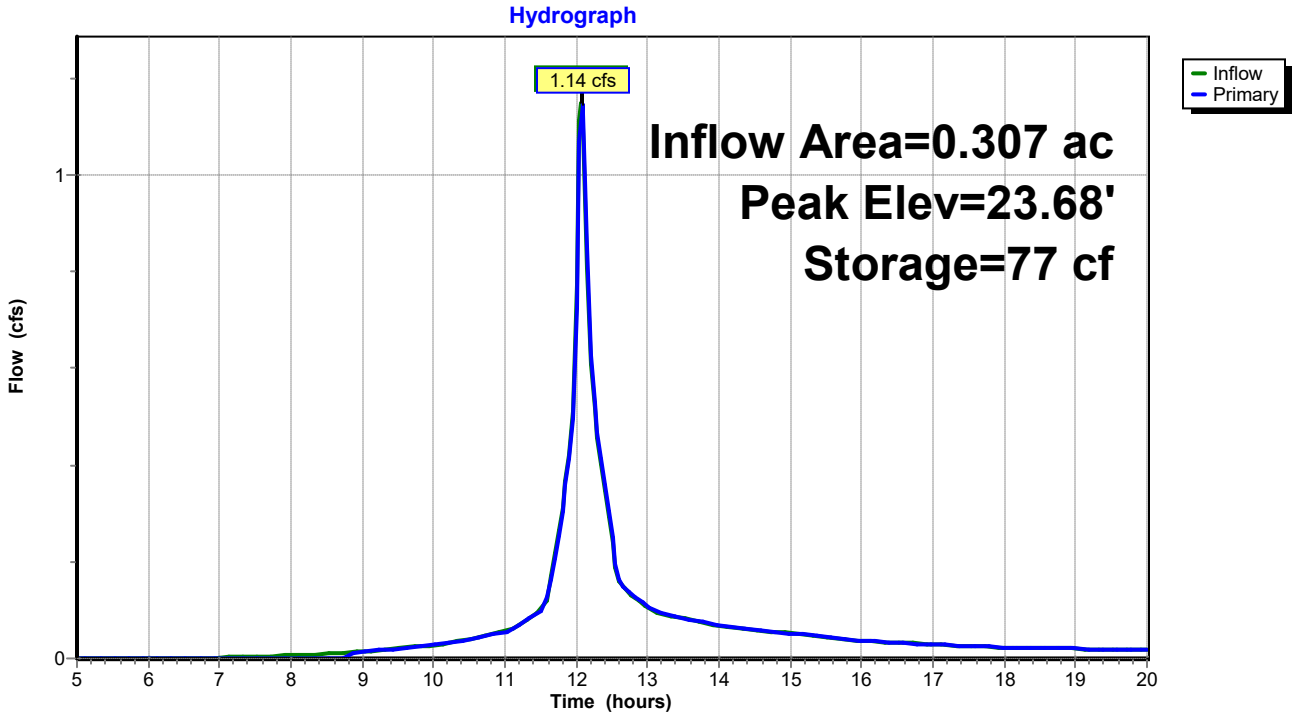

Summary for Pond 4P: CB-2

Inflow Area = 0.307 ac, 33.49% Impervious, Inflow Depth > 2.95" for 10-yr event
Inflow = 1.14 cfs @ 12.08 hrs, Volume= 0.075 af
Outflow = 1.14 cfs @ 12.08 hrs, Volume= 0.075 af, Atten= 0%, Lag= 0.0 min
Primary = 1.14 cfs @ 12.08 hrs, Volume= 0.075 af
Routed to Pond 5P : Level Lip Speader

Routing by Stor-Ind method, Time Span= 5.00-20.00 hrs, dt= 0.05 hrs
Peak Elev= 19.29' @ 12.08 hrs

Device	Routing	Invert	Outlet Devices
#1	Primary	18.75'	**18.0" Round Culvert** L= 40.0' CPP, projecting, no headwall, Ke= 0.900 Inlet / Outlet Invert= 18.75' / 18.00' S= 0.0187 '/' Cc= 0.900 n= 0.013 Corrugated PE, smooth interior, Flow Area= 1.77 sf

Primary OutFlow Max=1.11 cfs @ 12.08 hrs HW=19.28' (Free Discharge)
1=Culvert (Inlet Controls 1.11 cfs @ 1.96 fps)

Pond 4P: CB-2

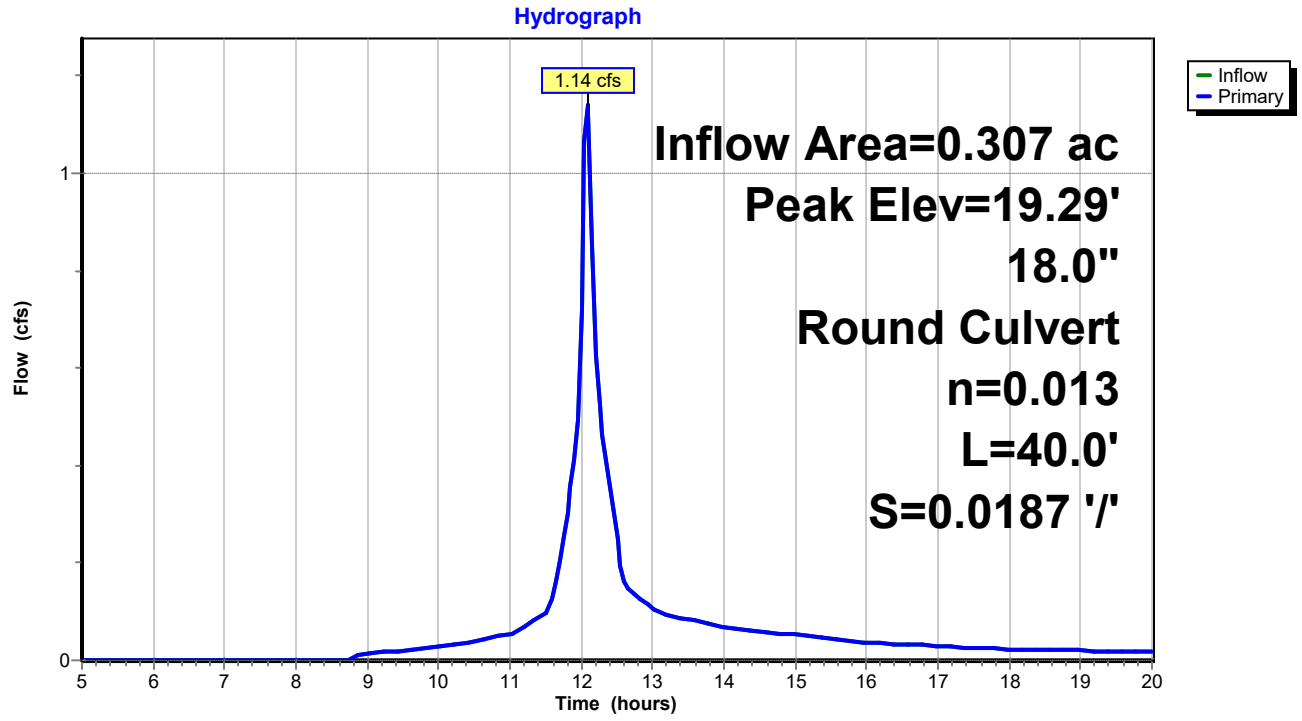

Summary for Pond 5P: Level Lip Speader

Inflow Area = 0.307 ac, 33.49% Impervious, Inflow Depth > 2.95" for 10-yr event
Inflow = 1.14 cfs @ 12.08 hrs, Volume= 0.075 af
Outflow = 1.10 cfs @ 12.11 hrs, Volume= 0.073 af, Atten= 4%, Lag= 1.4 min
Primary = 1.10 cfs @ 12.11 hrs, Volume= 0.073 af
Routed to Reach 2R : Reach 2

Routing by Stor-Ind method, Time Span= 5.00-20.00 hrs, dt= 0.05 hrs
Peak Elev= 18.00' @ 10.30 hrs Surf.Area= 168 sf Storage= 115 cf
Flood Elev= 20.00' Surf.Area= 168 sf Storage= 115 cf

Plug-Flow detention time= 21.7 min calculated for 0.072 af (96% of inflow)
Center-of-Mass det. time= 8.6 min (790.4 - 781.8)

Volume	Invert	Avail.Storage	Storage Description
#1	17.00'	115 cf	**Custom Stage Data (Prismatic)** Listed below (Recalc)

Elevation (feet)	Surf.Area (sq-ft)	Voids (%)	Inc.Store (cubic-feet)	Cum.Store (cubic-feet)
17.00	61	0.0	0	0
18.00	168	100.0	115	115

Device	Routing	Invert	Outlet Devices
#0	Primary	18.00'	**Automatic Storage Overflow** (Discharged without head)

Primary OutFlow Max=0.00 cfs @ 12.11 hrs HW=18.00' (Free Discharge)

Pond 5P: Level Lip Speader

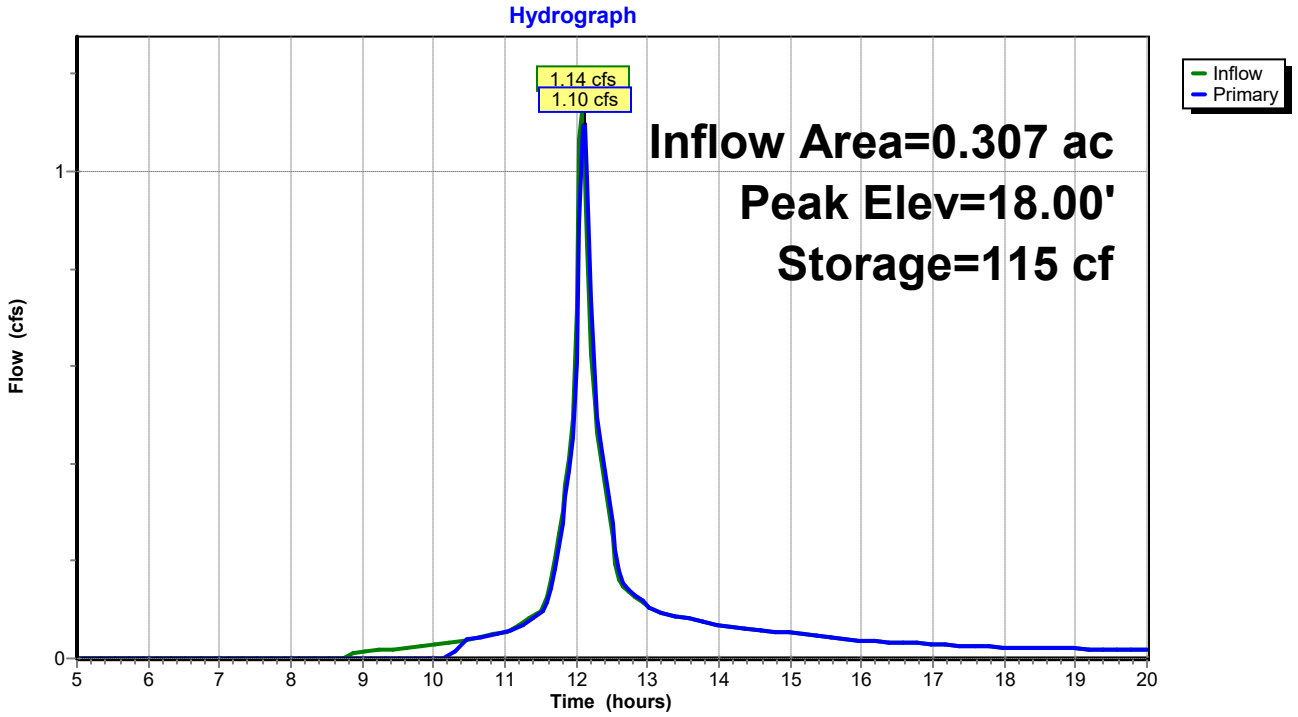

Summary for Link DP1: DP1

Inflow Area = 0.489 ac, 28.87% Impervious, Inflow Depth > 2.85" for 10-yr event
Inflow = 1.85 cfs @ 12.04 hrs, Volume= 0.116 af
Primary = 1.85 cfs @ 12.04 hrs, Volume= 0.116 af, Atten= 0%, Lag= 0.0 min
Routed to Reach SP1 : SACO RIVER / OCEAN

Primary outflow = Inflow, Time Span= 5.00-20.00 hrs, dt= 0.05 hrs

Link DP1: DP1

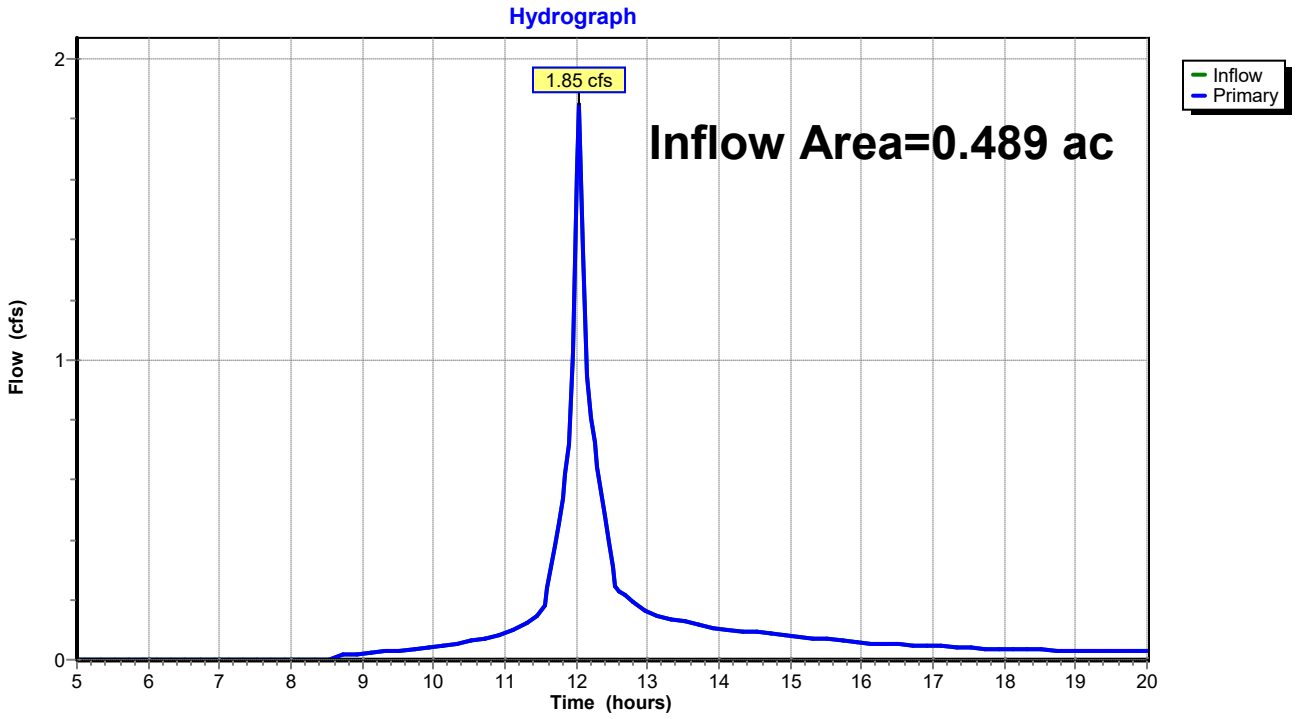

Summary for Link DP2: DP2

Inflow Area = 0.709 ac, 15.44% Impervious, Inflow Depth > 2.67" for 10-yr event
Inflow = 2.31 cfs @ 12.11 hrs, Volume= 0.158 af
Primary = 2.31 cfs @ 12.11 hrs, Volume= 0.158 af, Atten= 0%, Lag= 0.0 min
Routed to Reach SP1 : SACO RIVER / OCEAN

Primary outflow = Inflow, Time Span= 5.00-20.00 hrs, dt= 0.05 hrs

Link DP2: DP2

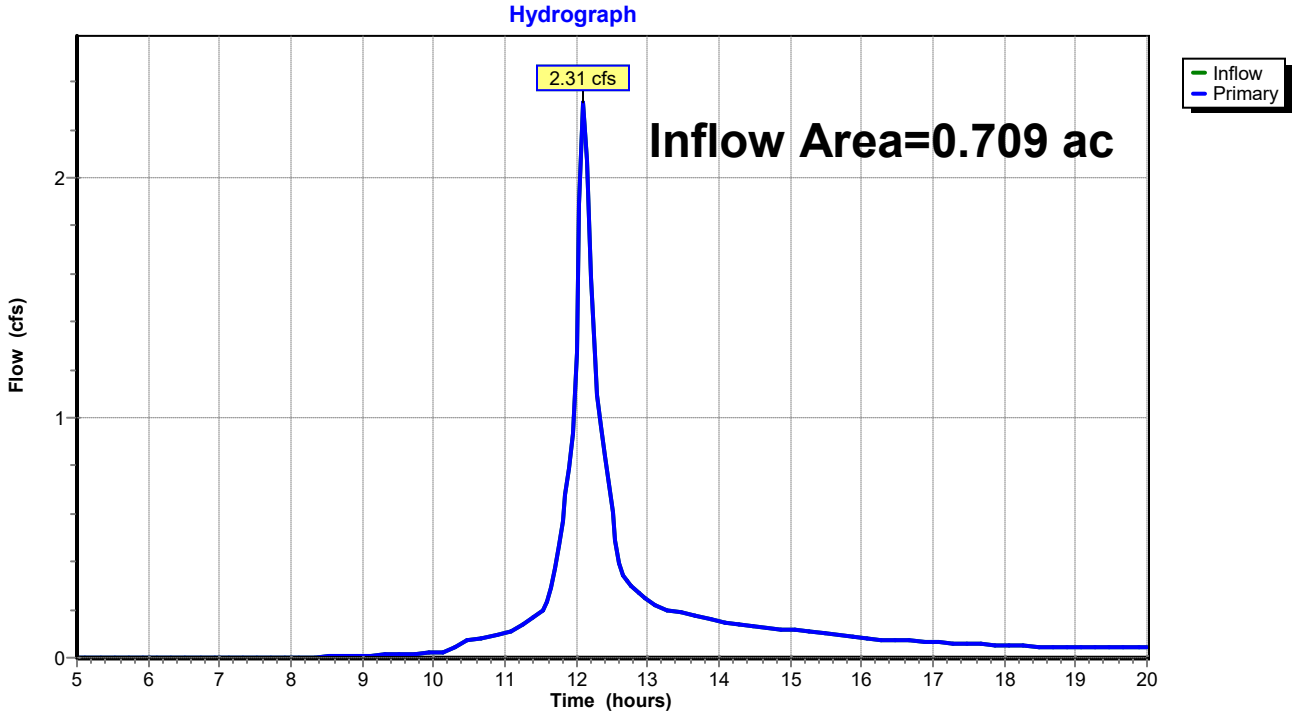

Time span=5.00-20.00 hrs, dt=0.05 hrs, 301 points
Runoff by SCS TR-20 method, UH=SCS, Weighted-CN
Reach routing by Stor-Ind method - Pond routing by Stor-Ind method

Subcatchment 1S: Post Subcatchment 1 Runoff Area=9,832 sf 50.01% Impervious Runoff Depth>4.45"
Flow Length=172' Tc=0.8 min CN=87 Runoff=1.36 cfs 0.084 af

Subcatchment 2S: Post Subcatchment 2 Runoff Area=11,488 sf 10.78% Impervious Runoff Depth>3.62"
Flow Length=133' Tc=3.4 min CN=79 Runoff=1.28 cfs 0.080 af

Subcatchment 3S: Post Subcatchment 3 Runoff Area=13,365 sf 33.49% Impervious Runoff Depth>4.13"
Flow Length=262' Tc=4.9 min CN=84 Runoff=1.57 cfs 0.106 af

Subcatchment 4S: Post Subcatchment 4 Runoff Area=17,529 sf 1.68% Impervious Runoff Depth>3.61"
Flow Length=126' Tc=7.2 min CN=79 Runoff=1.72 cfs 0.121 af

Subcatchment 5S: Post Subcatchment 5 Runoff Area=59,179 sf 4.06% Impervious Runoff Depth>3.72"
Flow Length=445' Tc=7.0 min CN=80 Runoff=5.99 cfs 0.421 af

Reach 1R: Reach 1 Inflow=1.33 cfs 0.082 af
Outflow=1.33 cfs 0.082 af

Reach 2R: Reach 2 Inflow=1.50 cfs 0.102 af
Outflow=1.50 cfs 0.102 af

Reach DP3: Shoreline 3 Inflow=5.99 cfs 0.421 af
Outflow=5.99 cfs 0.421 af

Reach SP1: SACO RIVER / OCEAN Inflow=11.09 cfs 0.806 af
Outflow=11.09 cfs 0.806 af

Pond 1P: Bioretention Filter Cell 1 Peak Elev=18.20' Storage=101 cf Inflow=1.36 cfs 0.084 af
Outflow=1.33 cfs 0.082 af

Pond 2P: CB-1 Peak Elev=14.38' Inflow=1.33 cfs 0.082 af
15.0" Round Culvert n=0.013 L=48.0' S=0.0365 '/' Outflow=1.33 cfs 0.082 af

Pond 3P: Bioretention Filter Cell 2 Peak Elev=23.72' Storage=86 cf Inflow=1.57 cfs 0.106 af
Outflow=1.56 cfs 0.105 af

Pond 4P: CB-2 Peak Elev=19.39' Inflow=1.56 cfs 0.105 af
18.0" Round Culvert n=0.013 L=40.0' S=0.0187 '/' Outflow=1.56 cfs 0.105 af

Pond 5P: Level Lip Speader Peak Elev=18.00' Storage=115 cf Inflow=1.56 cfs 0.105 af
Outflow=1.50 cfs 0.102 af

Link DP1: DP1 Inflow=2.54 cfs 0.162 af
Primary=2.54 cfs 0.162 af

Link DP2: DP2 Inflow=3.22 cfs 0.223 af
Primary=3.22 cfs 0.223 af

Total Runoff Area = 2.557 ac Runoff Volume = 0.811 af Average Runoff Depth = 3.80"
88.04% Pervious = 2.251 ac 11.96% Impervious = 0.306 ac

Summary for Subcatchment 1S: Post Subcatchment 1

Runoff = 1.36 cfs @ 12.01 hrs, Volume= 0.084 af, Depth> 4.45"
Routed to Pond 1P : Bioretention Filter Cell 1

Runoff by SCS TR-20 method, UH=SCS, Weighted-CN, Time Span= 5.00-20.00 hrs, dt= 0.05 hrs
Type III 24-hr 25-yr Rainfall=6.20"

	Area (sf)	CN	Description
	3,430	77	Woods, Good, HSG D
*	982	98	Ledge, HSG D
	595	80	>75% Grass cover, Good, HSG D
*	3,935	98	Paved Access Drive, HSG D
*	890	73	Bioretention Filter Cell, Good, HSG D
	9,832	87	Weighted Average
	4,915		49.99% Pervious Area
	4,917		50.01% Impervious Area

Tc (min)	Length (feet)	Slope (ft/ft)	Velocity (ft/sec)	Capacity (cfs)	Description
0.4	46	0.0500	1.73		**Sheet Flow, Tc-1**
					Smooth surfaces n= 0.011 P2= 3.30"
0.3	102	0.0500	5.25	15.74	**Channel Flow, Tc-2**
					Area= 3.0 sf Perim= 9.2' r= 0.33'
					n= 0.030 Earth, grassed & winding
0.1	24	0.0625	3.75		**Shallow Concentrated Flow, Tc-3**
					Grassed Waterway Kv= 15.0 fps
0.8	172	Total			

Subcatchment 1S: Post Subcatchment 1

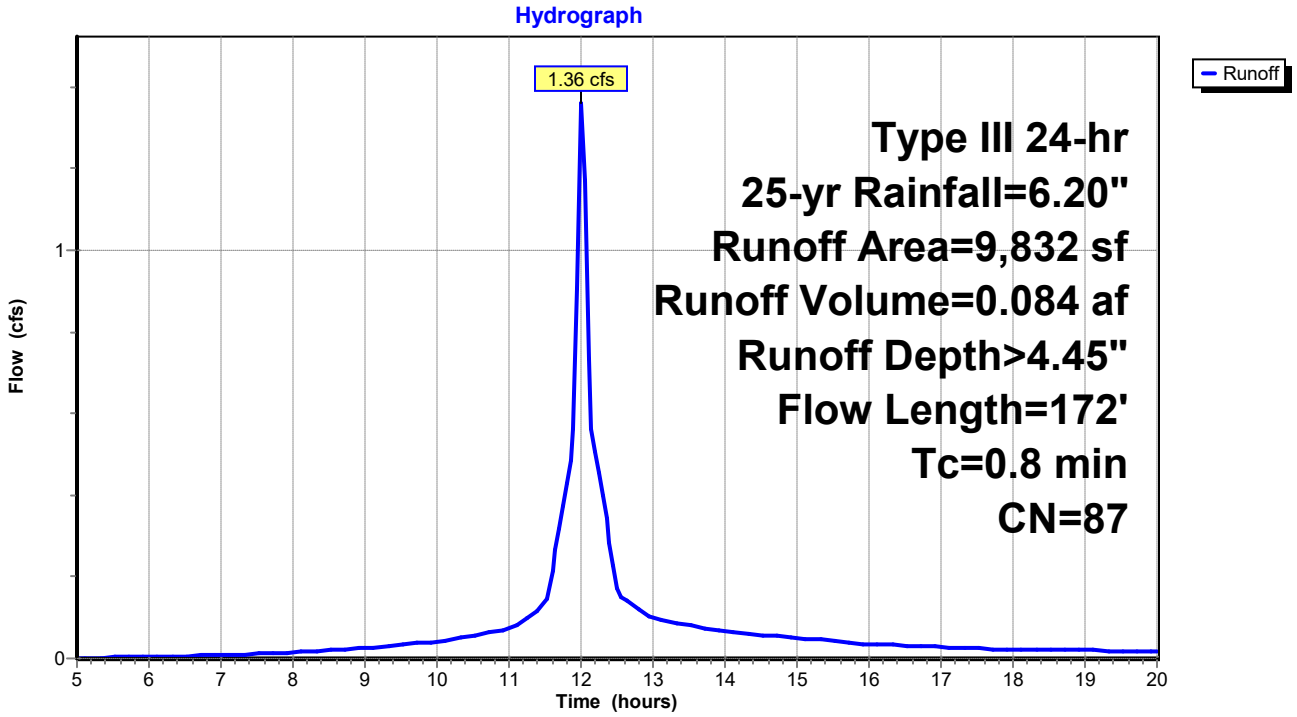

Summary for Subcatchment 2S: Post Subcatchment 2

Runoff = 1.28 cfs @ 12.05 hrs, Volume= 0.080 af, Depth> 3.62"
Routed to Link DP1 : DP1

Runoff by SCS TR-20 method, UH=SCS, Weighted-CN, Time Span= 5.00-20.00 hrs, dt= 0.05 hrs
Type III 24-hr 25-yr Rainfall=6.20"

Area (sf)	CN	Description
10,250	77	Woods, Good, HSG D
1,238	98	Paved parking, HSG D
11,488	79	Weighted Average
10,250		89.22% Pervious Area
1,238		10.78% Impervious Area

Tc (min)	Length (feet)	Slope (ft/ft)	Velocity (ft/sec)	Capacity (cfs)	Description
2.5	21	0.1905	0.14		**Sheet Flow, Tc-1** Woods: Light underbrush n= 0.400 P2= 3.30"
0.9	112	0.1696	2.06		**Shallow Concentrated Flow, Tc-2** Woodland Kv= 5.0 fps
3.4	133	Total			

Subcatchment 2S: Post Subcatchment 2

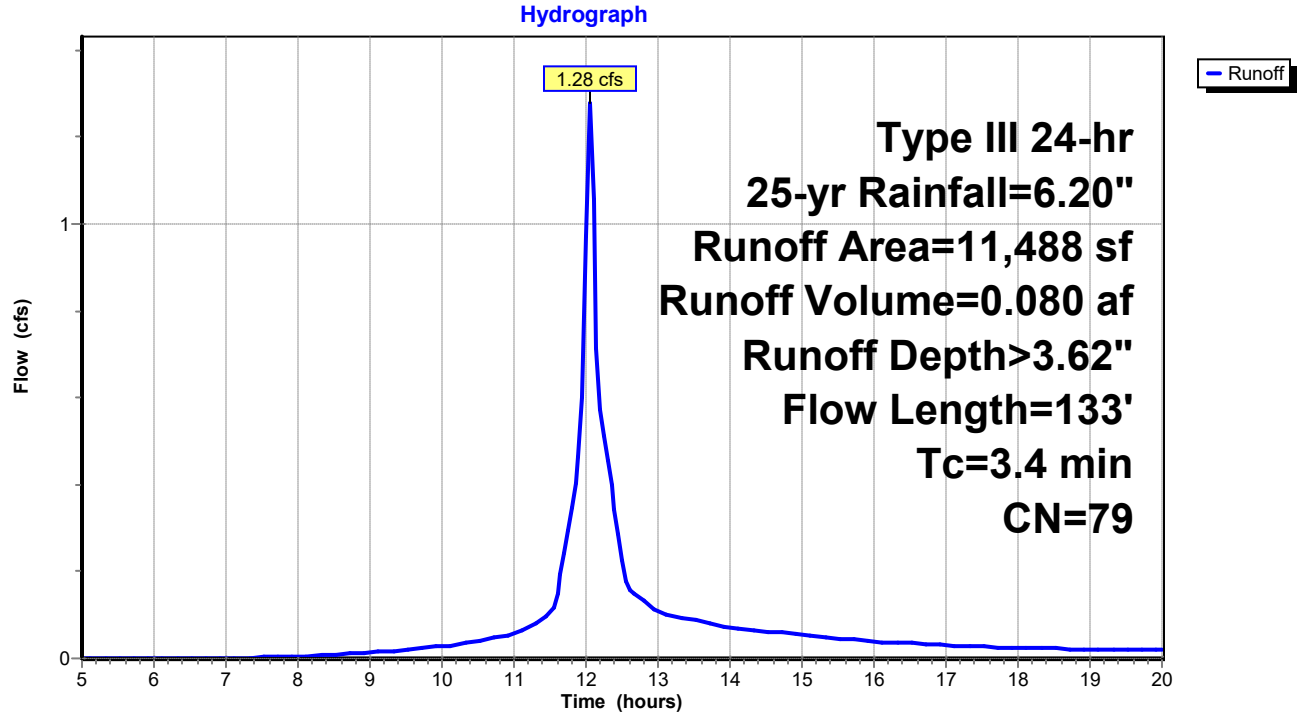

Summary for Subcatchment 3S: Post Subcatchment 3

Runoff = 1.57 cfs @ 12.07 hrs, Volume= 0.106 af, Depth> 4.13"
Routed to Pond 3P : Bioretention Filter Cell 2

Runoff by SCS TR-20 method, UH=SCS, Weighted-CN, Time Span= 5.00-20.00 hrs, dt= 0.05 hrs
Type III 24-hr 25-yr Rainfall=6.20"

	Area (sf)	CN	Description
	6,822	77	Woods, Good, HSG D
*	580	73	Biofiltration cell, Good, HSG D
*	3,768	98	Paved access drive, HSG D
	1,487	80	>75% Grass cover, Good, HSG D
*	708	98	Ledge, HSG D
	13,365	84	Weighted Average
	8,889		66.51% Pervious Area
	4,476		33.49% Impervious Area

Tc (min)	Length (feet)	Slope (ft/ft)	Velocity (ft/sec)	Capacity (cfs)	Description
4.2	43	0.2093	0.17		**Sheet Flow, Tc-1** Woods: Light underbrush n= 0.400 P2= 3.30"
0.7	214	0.0500	5.25	15.74	**Channel Flow, Tc-2** Area= 3.0 sf Perim= 9.2' r= 0.33' n= 0.030 Earth, grassed & winding
0.0	5	0.0500	3.35		**Shallow Concentrated Flow, Tc-3** Grassed Waterway Kv= 15.0 fps
4.9	262	Total			

Subcatchment 3S: Post Subcatchment 3

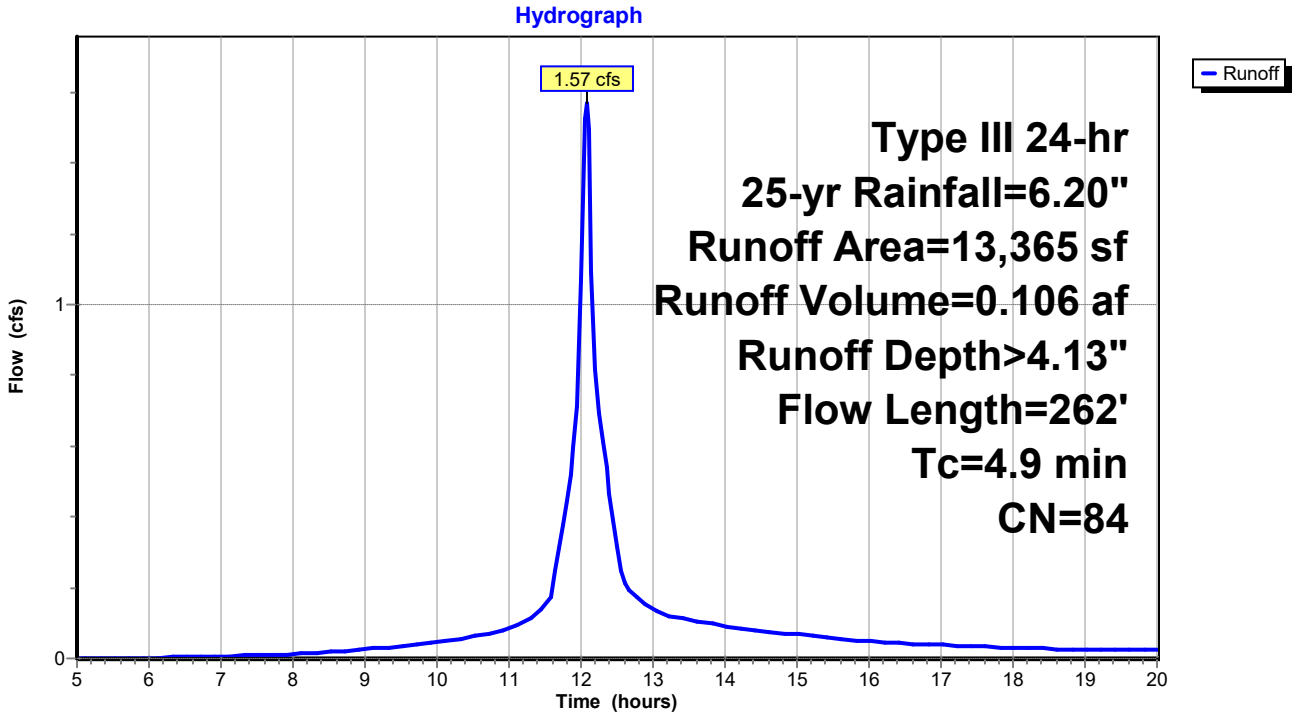

Summary for Subcatchment 4S: Post Subcatchment 4

Runoff = 1.72 cfs @ 12.11 hrs, Volume= 0.121 af, Depth> 3.61"
Routed to Link DP2 : DP2

Runoff by SCS TR-20 method, UH=SCS, Weighted-CN, Time Span= 5.00-20.00 hrs, dt= 0.05 hrs
Type III 24-hr 25-yr Rainfall=6.20"

	Area (sf)	CN	Description
*	295	98	Paved access drive, HSG D
	1,450	80	>75% Grass cover, Good, HSG D
	15,784	79	Woods, Fair, HSG D
	17,529	79	Weighted Average
	17,234		98.32% Pervious Area
	295		1.68% Impervious Area

Tc (min)	Length (feet)	Slope (ft/ft)	Velocity (ft/sec)	Capacity (cfs)	Description
6.8	62	0.1290	0.15		**Sheet Flow, Tc-1** Woods: Light underbrush n= 0.400 P2= 3.30"
0.4	64	0.2343	2.42		**Shallow Concentrated Flow, Tc-2** Woodland Kv= 5.0 fps
7.2	126	Total			

Subcatchment 4S: Post Subcatchment 4

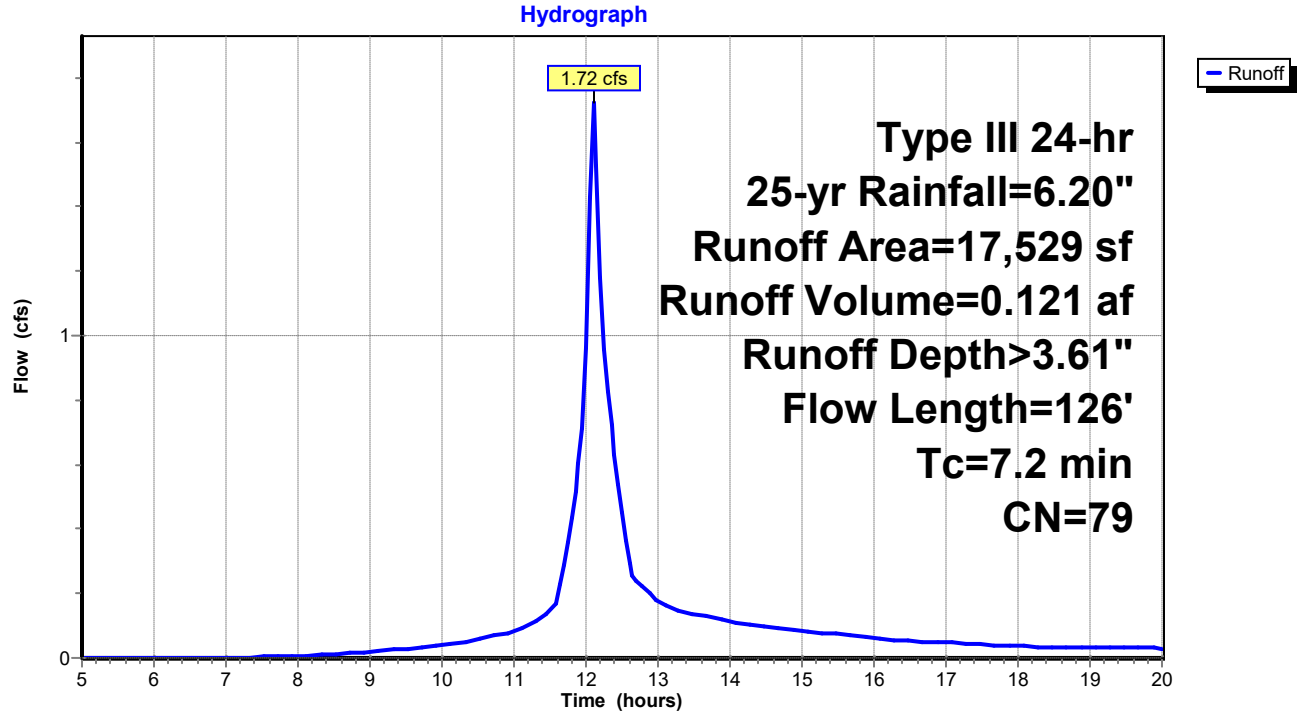

Summary for Subcatchment 5S: Post Subcatchment 5

Runoff = 5.99 cfs @ 12.10 hrs, Volume= 0.421 af, Depth> 3.72"
Routed to Reach DP3 : Shoreline 3

Runoff by SCS TR-20 method, UH=SCS, Weighted-CN, Time Span= 5.00-20.00 hrs, dt= 0.05 hrs
Type III 24-hr 25-yr Rainfall=6.20"

	Area (sf)	CN	Description
*	1,650	98	Paved acccess drive, HSG D
	751	98	Roofs, HSG D
*	6,955	88	Sand beach, HSG D
	3,872	96	Gravel surface, HSG D
	45,951	77	Woods, Good, HSG D
	59,179	80	Weighted Average
	56,778		95.94% Pervious Area
	2,401		4.06% Impervious Area

Tc (min)	Length (feet)	Slope (ft/ft)	Velocity (ft/sec)	Capacity (cfs)	Description
2.7	23	0.1740	0.14		**Sheet Flow, Tc-1** Woods: Light underbrush n= 0.400 P2= 3.30"
1.0	70	0.0574	1.20		**Shallow Concentrated Flow, Tc-2** Woodland Kv= 5.0 fps
0.5	170	0.1059	5.24		**Shallow Concentrated Flow, Tc-3** Unpaved Kv= 16.1 fps
2.5	140	0.0357	0.94		**Shallow Concentrated Flow, Tc-4** Woodland Kv= 5.0 fps
0.3	42	0.0714	2.67		**Shallow Concentrated Flow, Tc-5** Nearly Bare & Untilled Kv= 10.0 fps
7.0	445	Total			

Subcatchment 5S: Post Subcatchment 5

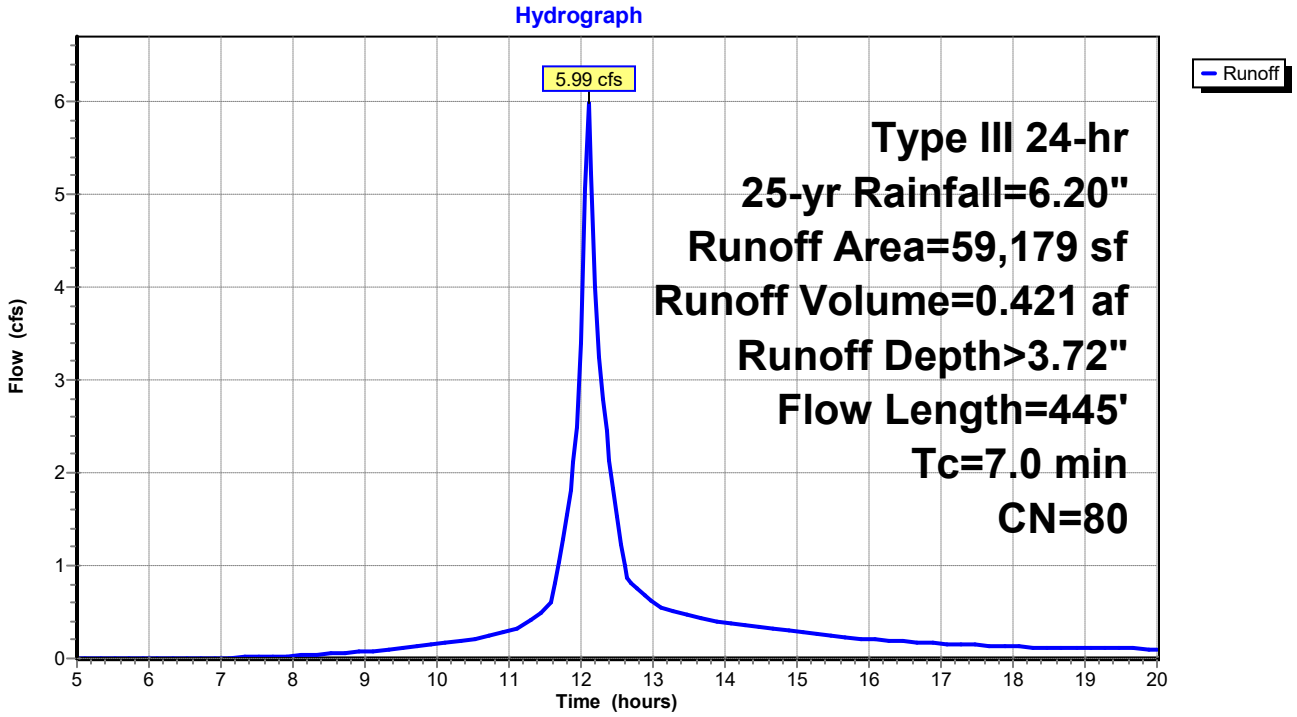

Summary for Reach 1R: Reach 1

Inflow Area = 0.226 ac, 50.01% Impervious, Inflow Depth > 4.39" for 25-yr event
Inflow = 1.33 cfs @ 12.02 hrs, Volume= 0.082 af
Outflow = 1.33 cfs @ 12.02 hrs, Volume= 0.082 af, Atten= 0%, Lag= 0.0 min
Routed to Link DP1 : DP1

Routing by Stor-Ind method, Time Span= 5.00-20.00 hrs, dt= 0.05 hrs

Reach 1R: Reach 1

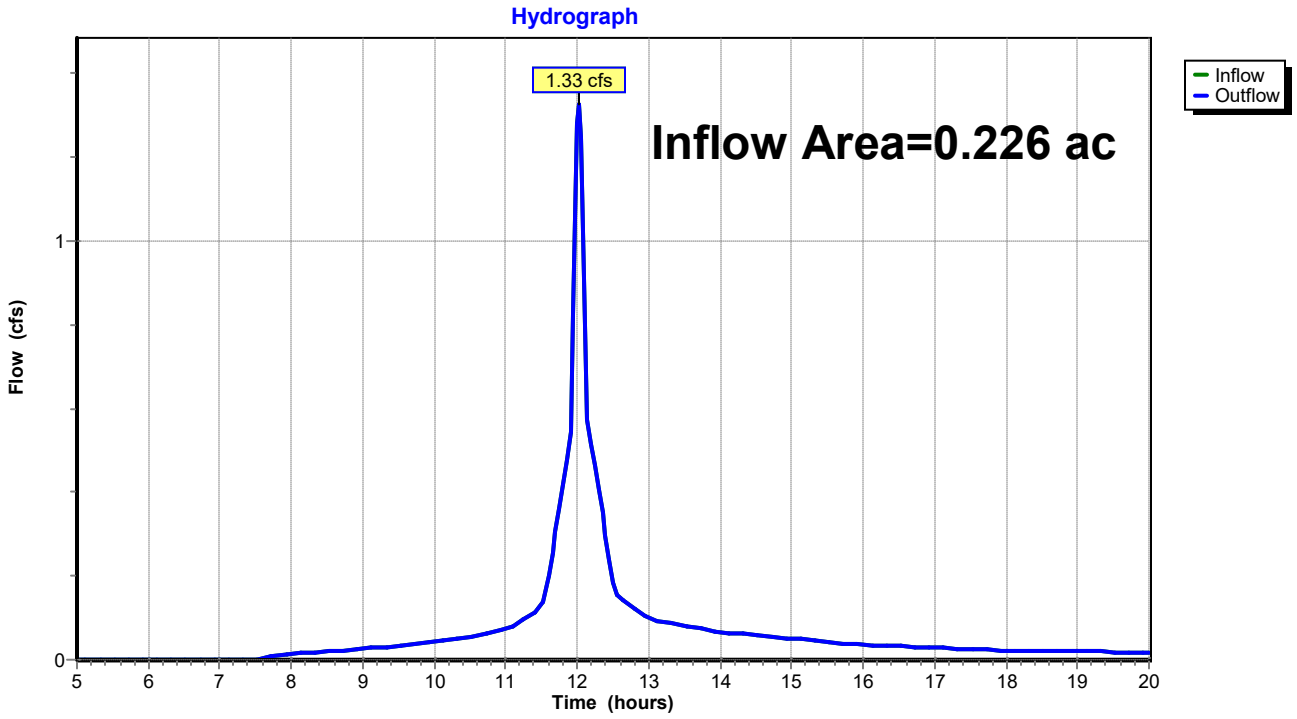

Summary for Reach 2R: Reach 2

Inflow Area = 0.307 ac, 33.49% Impervious, Inflow Depth > 3.99" for 25-yr event
Inflow = 1.50 cfs @ 12.11 hrs, Volume= 0.102 af
Outflow = 1.50 cfs @ 12.11 hrs, Volume= 0.102 af, Atten= 0%, Lag= 0.0 min
Routed to Link DP2 : DP2

Routing by Stor-Ind method, Time Span= 5.00-20.00 hrs, dt= 0.05 hrs

Reach 2R: Reach 2

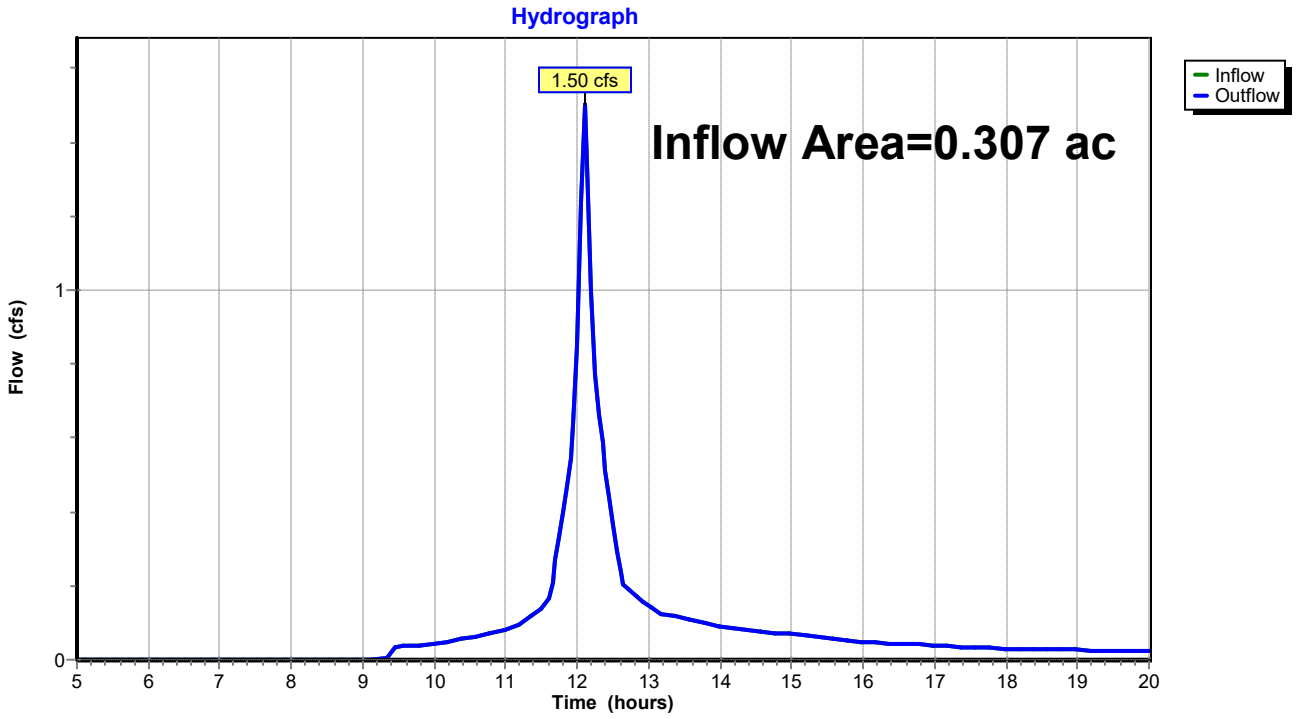

Summary for Reach DP3: Shoreline 3

Inflow Area = 1.359 ac, 4.06% Impervious, Inflow Depth > 3.72" for 25-yr event
Inflow = 5.99 cfs @ 12.10 hrs, Volume= 0.421 af
Outflow = 5.99 cfs @ 12.10 hrs, Volume= 0.421 af, Atten= 0%, Lag= 0.0 min
Routed to Reach SP1 : SACO RIVER / OCEAN

Routing by Stor-Ind method, Time Span= 5.00-20.00 hrs, dt= 0.05 hrs

Reach DP3: Shoreline 3

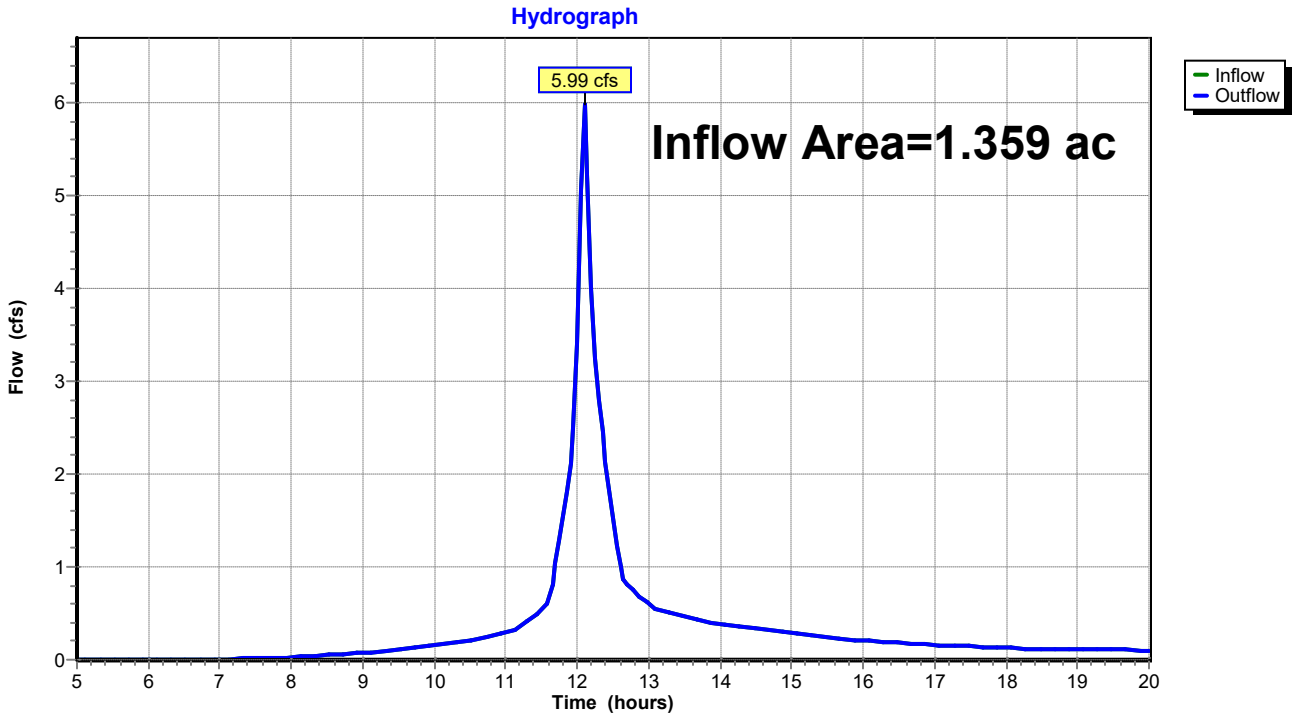

Summary for Reach SP1: SACO RIVER / OCEAN

Inflow Area = 2.557 ac, 11.96% Impervious, Inflow Depth > 3.78" for 25-yr event
Inflow = 11.09 cfs @ 12.09 hrs, Volume= 0.806 af
Outflow = 11.09 cfs @ 12.09 hrs, Volume= 0.806 af, Atten= 0%, Lag= 0.0 min

Routing by Stor-Ind method, Time Span= 5.00-20.00 hrs, dt= 0.05 hrs

Reach SP1: SACO RIVER / OCEAN

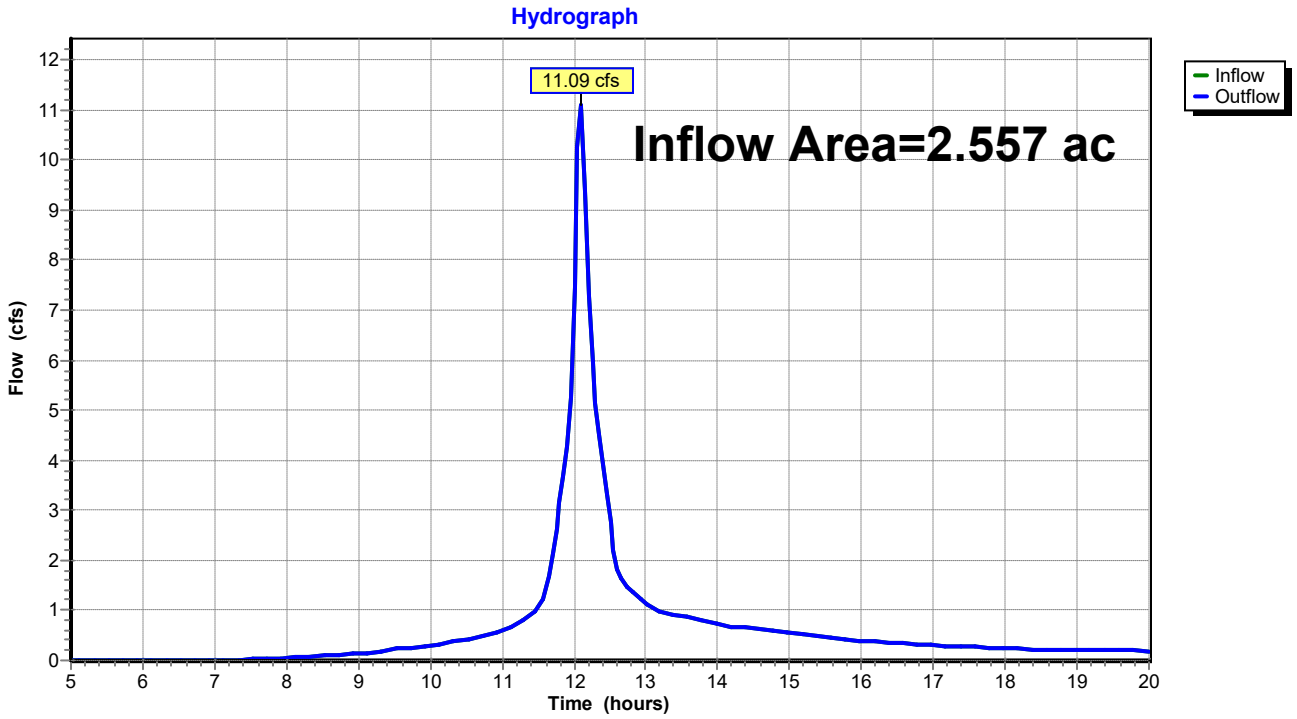

Summary for Pond 1P: Bioretention Filter Cell 1

Inflow Area = 0.226 ac, 50.01% Impervious, Inflow Depth > 4.45" for 25-yr event
Inflow = 1.36 cfs @ 12.01 hrs, Volume= 0.084 af
Outflow = 1.33 cfs @ 12.02 hrs, Volume= 0.082 af, Atten= 2%, Lag= 0.6 min
Primary = 1.33 cfs @ 12.02 hrs, Volume= 0.082 af
Routed to Pond 2P : CB-1

Routing by Stor-Ind method, Time Span= 5.00-20.00 hrs, dt= 0.05 hrs
Peak Elev= 18.20' @ 12.02 hrs Surf.Area= 275 sf Storage= 101 cf

Plug-Flow detention time= 12.6 min calculated for 0.082 af (98% of inflow)
Center-of-Mass det. time= 6.1 min (765.1 - 758.9)

Volume	Invert	Avail.Storage	Storage Description
#1	17.50'	200 cf	**Custom Stage Data (Prismatic)** Listed below (Recalc)

Elevation (feet)	Surf.Area (sq-ft)	Inc.Store (cubic-feet)	Cum.Store (cubic-feet)
17.50	0	0	0
18.00	213	53	53
18.50	372	146	200

Device	Routing	Invert	Outlet Devices
#1	Primary	18.00'	**18.0" Horiz. Orifice/Grate** C= 0.600 in 24.0" Grate (56% open area) Limited to weir flow at low heads

Primary OutFlow Max=1.27 cfs @ 12.02 hrs HW=18.19' (Free Discharge)
↑—**1=Orifice/Grate** (Weir Controls 1.27 cfs @ 1.42 fps)

Pond 1P: Bioretention Filter Cell 1

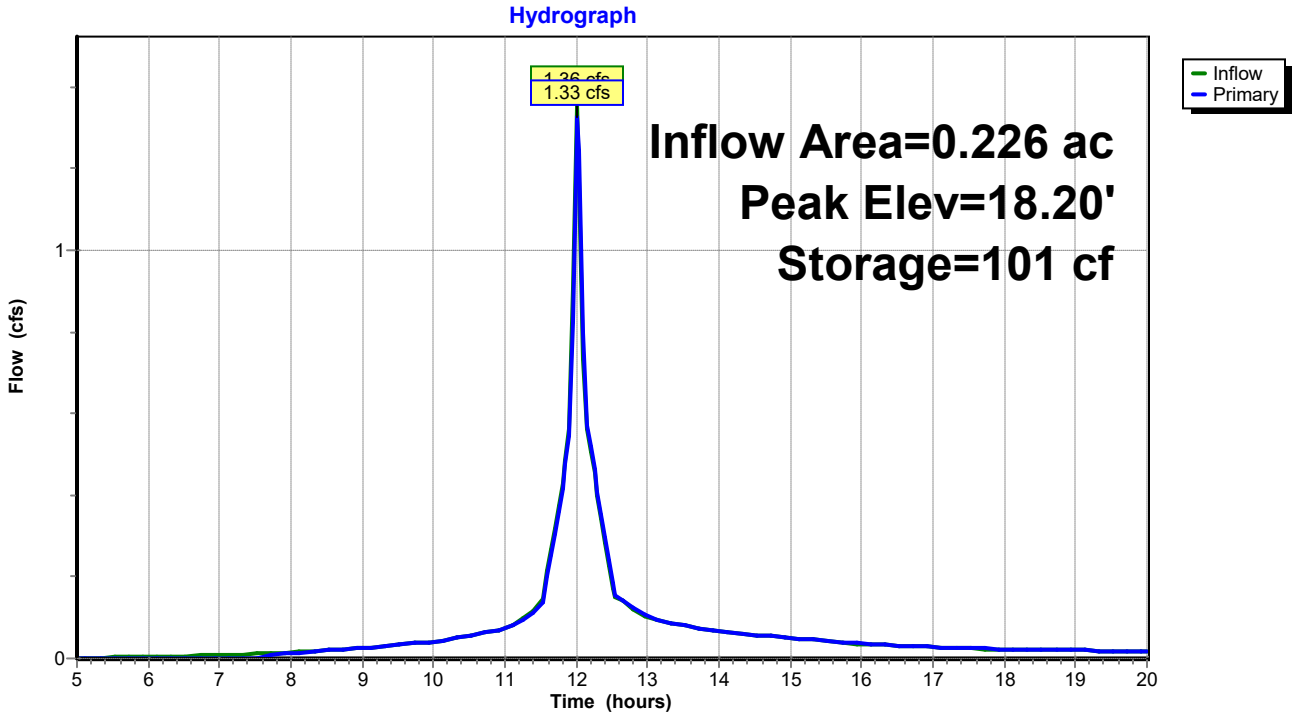

Summary for Pond 2P: CB-1

Inflow Area = 0.226 ac, 50.01% Impervious, Inflow Depth > 4.39" for 25-yr event
Inflow = 1.33 cfs @ 12.02 hrs, Volume= 0.082 af
Outflow = 1.33 cfs @ 12.02 hrs, Volume= 0.082 af, Atten= 0%, Lag= 0.0 min
Primary = 1.33 cfs @ 12.02 hrs, Volume= 0.082 af
Routed to Reach 1R : Reach 1

Routing by Stor-Ind method, Time Span= 5.00-20.00 hrs, dt= 0.05 hrs
Peak Elev= 14.38' @ 12.02 hrs

Device	Routing	Invert	Outlet Devices
#1	Primary	13.75'	**15.0" Round Culvert** L= 48.0' CPP, projecting, no headwall, Ke= 0.900 Inlet / Outlet Invert= 13.75' / 12.00' S= 0.0365 '/' Cc= 0.900 n= 0.013 Corrugated PE, smooth interior, Flow Area= 1.23 sf

Primary OutFlow Max=1.27 cfs @ 12.02 hrs HW=14.36' (Free Discharge)
1=Culvert (Inlet Controls 1.27 cfs @ 2.11 fps)

Pond 2P: CB-1

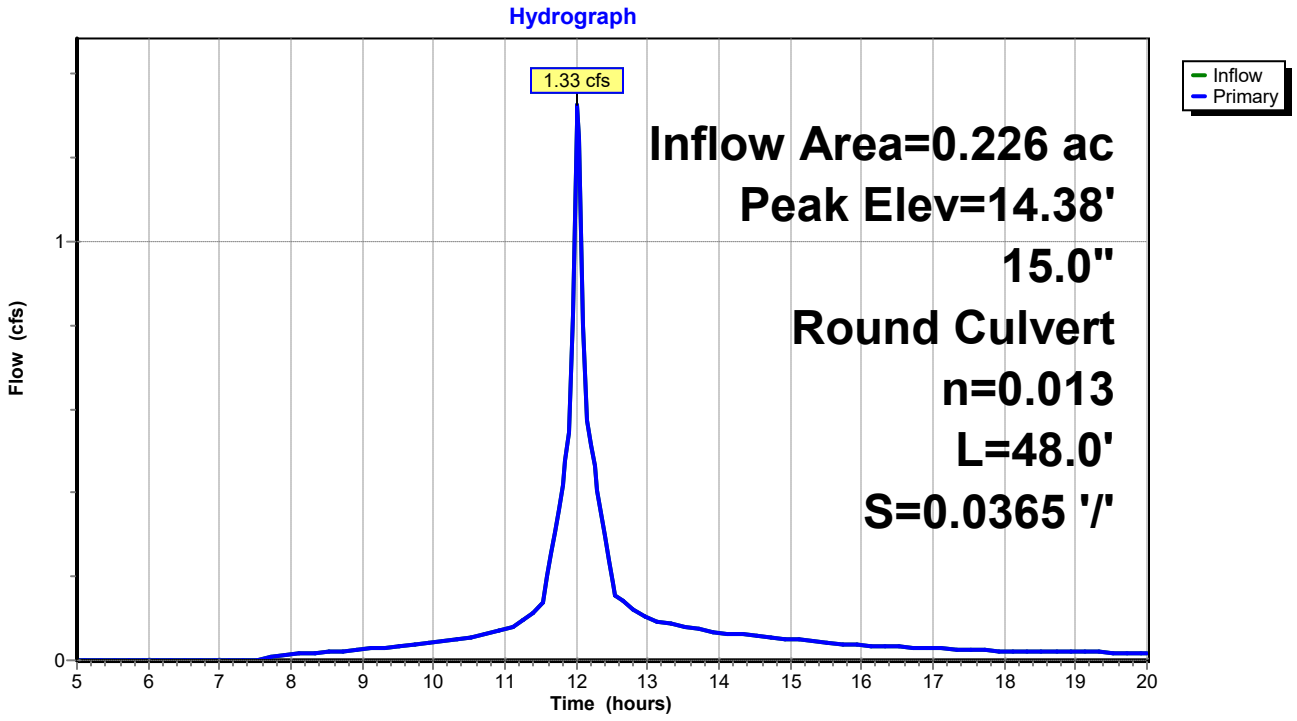

Summary for Pond 3P: Bioretention Filter Cell 2

Inflow Area = 0.307 ac, 33.49% Impervious, Inflow Depth > 4.13" for 25-yr event
Inflow = 1.57 cfs @ 12.07 hrs, Volume= 0.106 af
Outflow = 1.56 cfs @ 12.08 hrs, Volume= 0.105 af, Atten= 1%, Lag= 0.6 min
Primary = 1.56 cfs @ 12.08 hrs, Volume= 0.105 af
Routed to Pond 4P : CB-2

Routing by Stor-Ind method, Time Span= 5.00-20.00 hrs, dt= 0.05 hrs
Peak Elev= 23.72' @ 12.08 hrs Surf.Area= 240 sf Storage= 86 cf

Plug-Flow detention time= 7.6 min calculated for 0.104 af (99% of inflow)
Center-of-Mass det. time= 3.8 min (773.5 - 769.7)

Volume	Invert	Avail.Storage	Storage Description
#1	23.00'	380 cf	**Custom Stage Data (Prismatic)** Listed below (Recalc)

Elevation (feet)	Surf.Area (sq-ft)	Inc.Store (cubic-feet)	Cum.Store (cubic-feet)
23.00	0	0	0
24.00	335	168	168
24.50	515	213	380

Device	Routing	Invert	Outlet Devices
#1	Primary	23.50'	**18.0" Horiz. Orifice/Grate** C= 0.600 in 24.0" Grate (56% open area) Limited to weir flow at low heads

Primary OutFlow Max=1.51 cfs @ 12.08 hrs HW=23.71' (Free Discharge)
1=Orifice/Grate (Weir Controls 1.51 cfs @ 1.51 fps)

Pond 3P: Bioretention Filter Cell 2

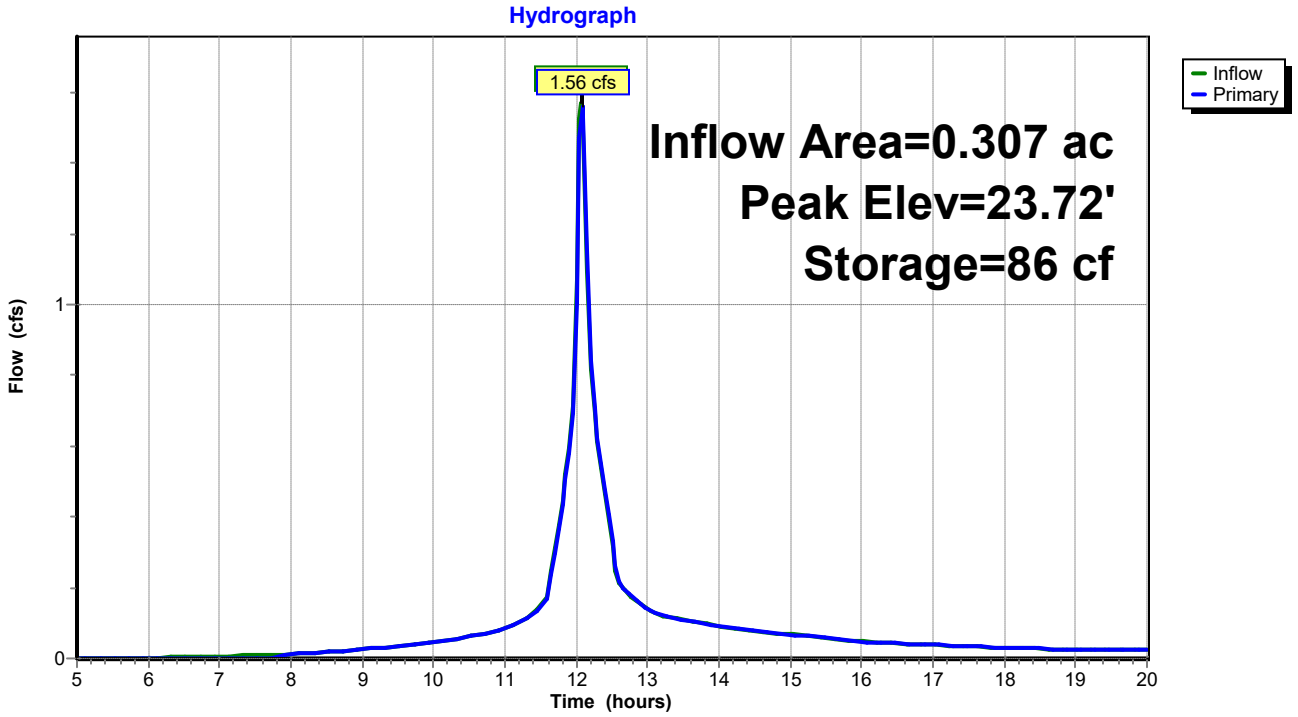

Summary for Pond 4P: CB-2

Inflow Area = 0.307 ac, 33.49% Impervious, Inflow Depth > 4.09" for 25-yr event
Inflow = 1.56 cfs @ 12.08 hrs, Volume= 0.105 af
Outflow = 1.56 cfs @ 12.08 hrs, Volume= 0.105 af, Atten= 0%, Lag= 0.0 min
Primary = 1.56 cfs @ 12.08 hrs, Volume= 0.105 af
Routed to Pond 5P : Level Lip Speader

Routing by Stor-Ind method, Time Span= 5.00-20.00 hrs, dt= 0.05 hrs
Peak Elev= 19.39' @ 12.08 hrs

Device	Routing	Invert	Outlet Devices
#1	Primary	18.75'	**18.0" Round Culvert** L= 40.0' CPP, projecting, no headwall, Ke= 0.900 Inlet / Outlet Invert= 18.75' / 18.00' S= 0.0187 '/' Cc= 0.900 n= 0.013 Corrugated PE, smooth interior, Flow Area= 1.77 sf

Primary OutFlow Max=1.51 cfs @ 12.08 hrs HW=19.38' (Free Discharge)
1=Culvert (Inlet Controls 1.51 cfs @ 2.13 fps)

Pond 4P: CB-2

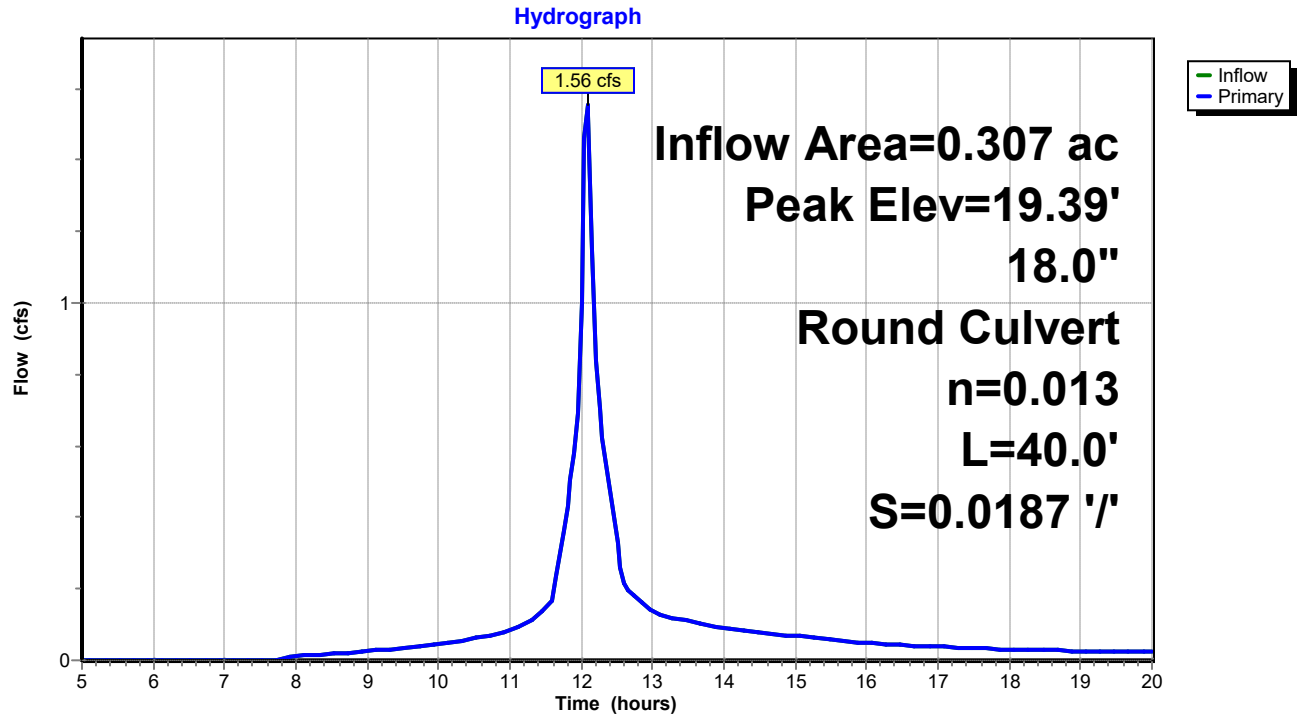

Summary for Pond 5P: Level Lip Speader

Inflow Area = 0.307 ac, 33.49% Impervious, Inflow Depth > 4.09" for 25-yr event
Inflow = 1.56 cfs @ 12.08 hrs, Volume= 0.105 af
Outflow = 1.50 cfs @ 12.11 hrs, Volume= 0.102 af, Atten= 4%, Lag= 1.4 min
Primary = 1.50 cfs @ 12.11 hrs, Volume= 0.102 af
Routed to Reach 2R : Reach 2

Routing by Stor-Ind method, Time Span= 5.00-20.00 hrs, dt= 0.05 hrs
Peak Elev= 18.00' @ 9.40 hrs Surf.Area= 168 sf Storage= 115 cf
Flood Elev= 20.00' Surf.Area= 168 sf Storage= 115 cf

Plug-Flow detention time= 17.8 min calculated for 0.102 af (97% of inflow)
Center-of-Mass det. time= 7.7 min (781.2 - 773.5)

Volume	Invert	Avail.Storage	Storage Description
#1	17.00'	115 cf	**Custom Stage Data (Prismatic)** Listed below (Recalc)

Elevation (feet)	Surf.Area (sq-ft)	Voids (%)	Inc.Store (cubic-feet)	Cum.Store (cubic-feet)
17.00	61	0.0	0	0
18.00	168	100.0	115	115

Device	Routing	Invert	Outlet Devices
#0	Primary	18.00'	**Automatic Storage Overflow** (Discharged without head)

Primary OutFlow Max=0.00 cfs @ 12.11 hrs HW=18.00' (Free Discharge)

Pond 5P: Level Lip Speader

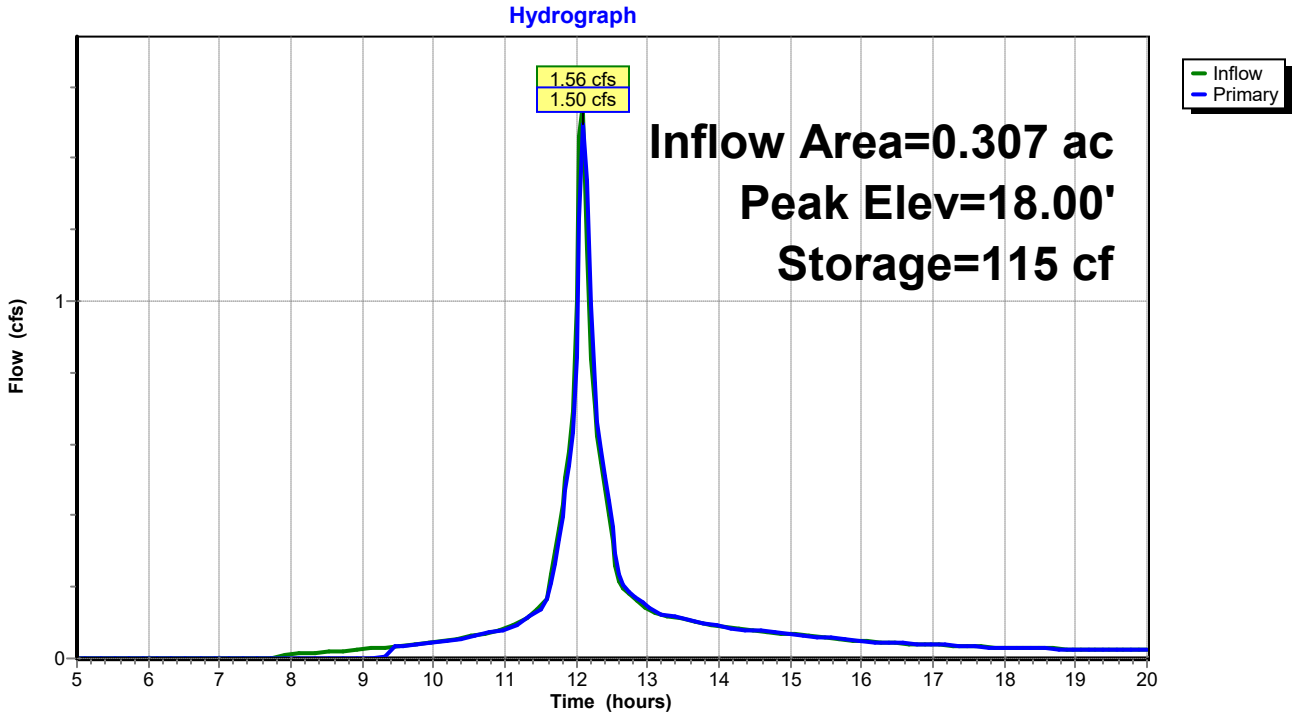

Summary for Link DP1: DP1

Inflow Area = 0.489 ac, 28.87% Impervious, Inflow Depth > 3.97" for 25-yr event
Inflow = 2.54 cfs @ 12.04 hrs, Volume= 0.162 af
Primary = 2.54 cfs @ 12.04 hrs, Volume= 0.162 af, Atten= 0%, Lag= 0.0 min
Routed to Reach SP1 : SACO RIVER / OCEAN

Primary outflow = Inflow, Time Span= 5.00-20.00 hrs, dt= 0.05 hrs

Link DP1: DP1

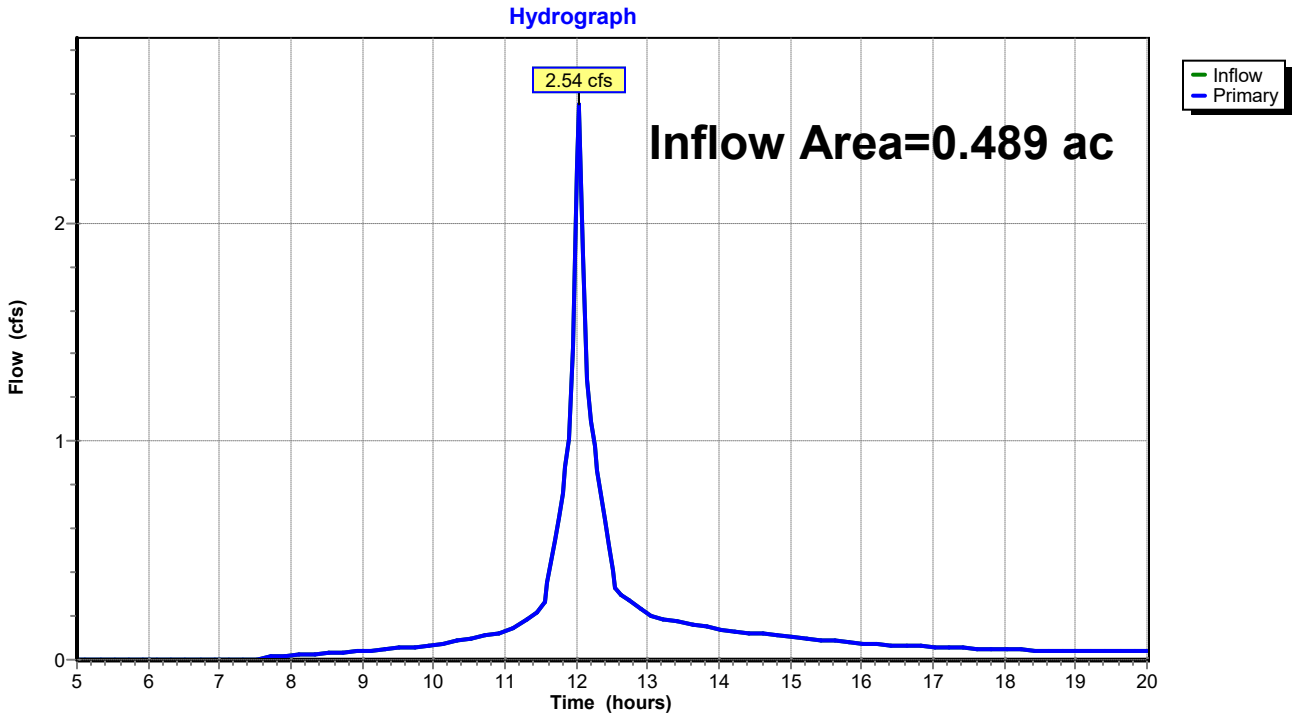

Summary for Link DP2: DP2

Inflow Area = 0.709 ac, 15.44% Impervious, Inflow Depth > 3.77" for 25-yr event
Inflow = 3.22 cfs @ 12.11 hrs, Volume= 0.223 af
Primary = 3.22 cfs @ 12.11 hrs, Volume= 0.223 af, Atten= 0%, Lag= 0.0 min
Routed to Reach SP1 : SACO RIVER / OCEAN

Primary outflow = Inflow, Time Span= 5.00-20.00 hrs, dt= 0.05 hrs

Link DP2: DP2

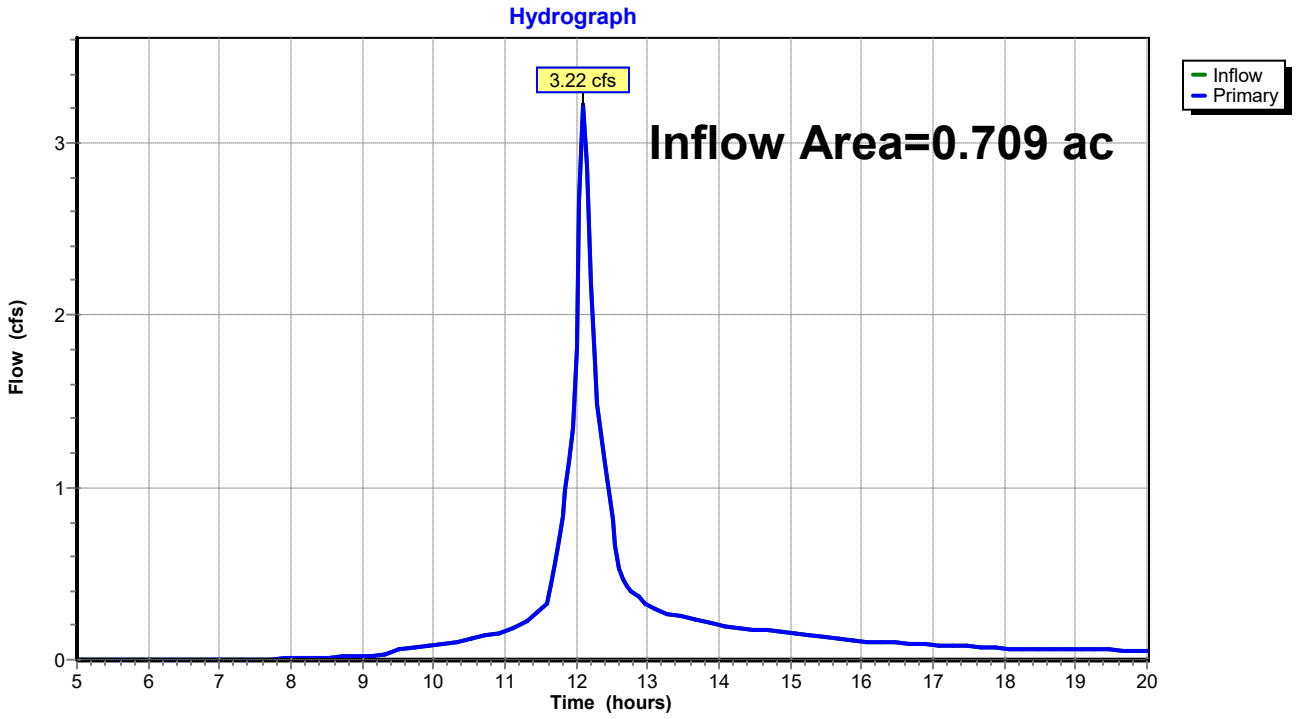

Time span=5.00-20.00 hrs, dt=0.05 hrs, 301 points
Runoff by SCS TR-20 method, UH=SCS, Weighted-CN
Reach routing by Stor-Ind method - Pond routing by Stor-Ind method

Subcatchment 1S: Post Subcatchment 1 Runoff Area=9,832 sf 50.01% Impervious Runoff Depth>6.75"
Flow Length=172' Tc=0.8 min CN=87 Runoff=2.01 cfs 0.127 af

Subcatchment 2S: Post Subcatchment 2 Runoff Area=11,488 sf 10.78% Impervious Runoff Depth>5.81"
Flow Length=133' Tc=3.4 min CN=79 Runoff=2.01 cfs 0.128 af

Subcatchment 3S: Post Subcatchment 3 Runoff Area=13,365 sf 33.49% Impervious Runoff Depth>6.40"
Flow Length=262' Tc=4.9 min CN=84 Runoff=2.37 cfs 0.164 af

Subcatchment 4S: Post Subcatchment 4 Runoff Area=17,529 sf 1.68% Impervious Runoff Depth>5.80"
Flow Length=126' Tc=7.2 min CN=79 Runoff=2.71 cfs 0.195 af

Subcatchment 5S: Post Subcatchment 5 Runoff Area=59,179 sf 4.06% Impervious Runoff Depth>5.92"
Flow Length=445' Tc=7.0 min CN=80 Runoff=9.35 cfs 0.670 af

Reach 1R: Reach 1 Inflow=1.97 cfs 0.126 af
Outflow=1.97 cfs 0.126 af

Reach 2R: Reach 2 Inflow=2.27 cfs 0.160 af
Outflow=2.27 cfs 0.160 af

Reach DP3: Shoreline 3 Inflow=9.35 cfs 0.670 af
Outflow=9.35 cfs 0.670 af

Reach SP1: SACO RIVER / OCEAN Inflow=17.21 cfs 1.278 af
Outflow=17.21 cfs 1.278 af

Pond 1P: Bioretention Filter Cell 1 Peak Elev=18.25' Storage=118 cf Inflow=2.01 cfs 0.127 af
Outflow=1.97 cfs 0.126 af

Pond 2P: CB-1 Peak Elev=14.54' Inflow=1.97 cfs 0.126 af
15.0" Round Culvert n=0.013 L=48.0' S=0.0365 '/' Outflow=1.97 cfs 0.126 af

Pond 3P: Bioretention Filter Cell 2 Peak Elev=23.79' Storage=103 cf Inflow=2.37 cfs 0.164 af
Outflow=2.35 cfs 0.163 af

Pond 4P: CB-2 Peak Elev=19.56' Inflow=2.35 cfs 0.163 af
18.0" Round Culvert n=0.013 L=40.0' S=0.0187 '/' Outflow=2.35 cfs 0.163 af

Pond 5P: Level Lip Speader Peak Elev=18.00' Storage=115 cf Inflow=2.35 cfs 0.163 af
Outflow=2.27 cfs 0.160 af

Link DP1: DP1 Inflow=3.88 cfs 0.253 af
Primary=3.88 cfs 0.253 af

Link DP2: DP2 Inflow=4.98 cfs 0.354 af
Primary=4.98 cfs 0.354 af

Total Runoff Area = 2.557 ac Runoff Volume = 1.283 af Average Runoff Depth = 6.02"
88.04% Pervious = 2.251 ac 11.96% Impervious = 0.306 ac

Summary for Subcatchment 1S: Post Subcatchment 1

Runoff = 2.01 cfs @ 12.01 hrs, Volume= 0.127 af, Depth> 6.75"
Routed to Pond 1P : Bioretention Filter Cell 1

Runoff by SCS TR-20 method, UH=SCS, Weighted-CN, Time Span= 5.00-20.00 hrs, dt= 0.05 hrs
Type III 24-hr 100-yr Rainfall=8.70"

	Area (sf)	CN	Description
	3,430	77	Woods, Good, HSG D
*	982	98	Ledge, HSG D
	595	80	>75% Grass cover, Good, HSG D
*	3,935	98	Paved Access Drive, HSG D
*	890	73	Bioretention Filter Cell, Good, HSG D
	9,832	87	Weighted Average
	4,915		49.99% Pervious Area
	4,917		50.01% Impervious Area

Tc (min)	Length (feet)	Slope (ft/ft)	Velocity (ft/sec)	Capacity (cfs)	Description
0.4	46	0.0500	1.73		**Sheet Flow, Tc-1** Smooth surfaces n= 0.011 P2= 3.30"
0.3	102	0.0500	5.25	15.74	**Channel Flow, Tc-2** Area= 3.0 sf Perim= 9.2' r= 0.33' n= 0.030 Earth, grassed & winding
0.1	24	0.0625	3.75		**Shallow Concentrated Flow, Tc-3** Grassed Waterway Kv= 15.0 fps
0.8	172	Total			

Subcatchment 1S: Post Subcatchment 1

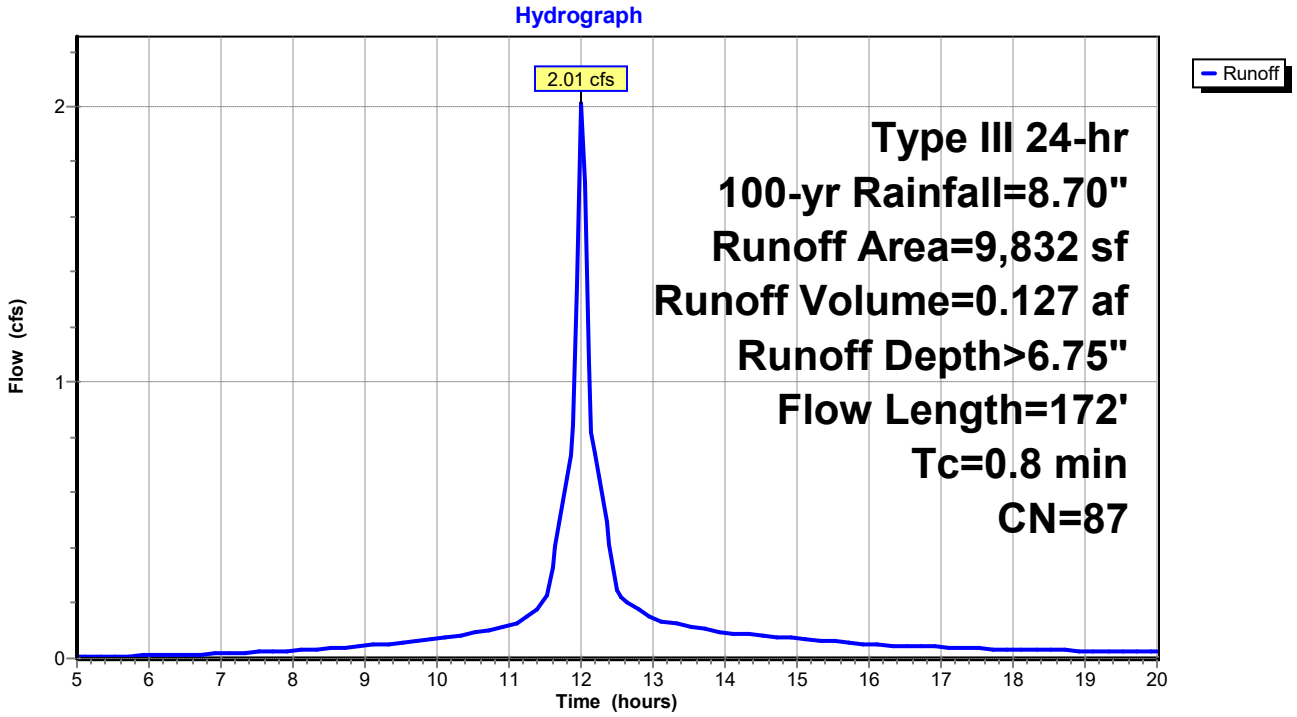

Summary for Subcatchment 2S: Post Subcatchment 2

Runoff = 2.01 cfs @ 12.05 hrs, Volume= 0.128 af, Depth> 5.81"
Routed to Link DP1 : DP1

Runoff by SCS TR-20 method, UH=SCS, Weighted-CN, Time Span= 5.00-20.00 hrs, dt= 0.05 hrs
Type III 24-hr 100-yr Rainfall=8.70"

Area (sf)	CN	Description
10,250	77	Woods, Good, HSG D
1,238	98	Paved parking, HSG D
11,488	79	Weighted Average
10,250		89.22% Pervious Area
1,238		10.78% Impervious Area

Tc (min)	Length (feet)	Slope (ft/ft)	Velocity (ft/sec)	Capacity (cfs)	Description
2.5	21	0.1905	0.14		**Sheet Flow, Tc-1** Woods: Light underbrush n= 0.400 P2= 3.30"
0.9	112	0.1696	2.06		**Shallow Concentrated Flow, Tc-2** Woodland Kv= 5.0 fps
3.4	133	Total			

Subcatchment 2S: Post Subcatchment 2

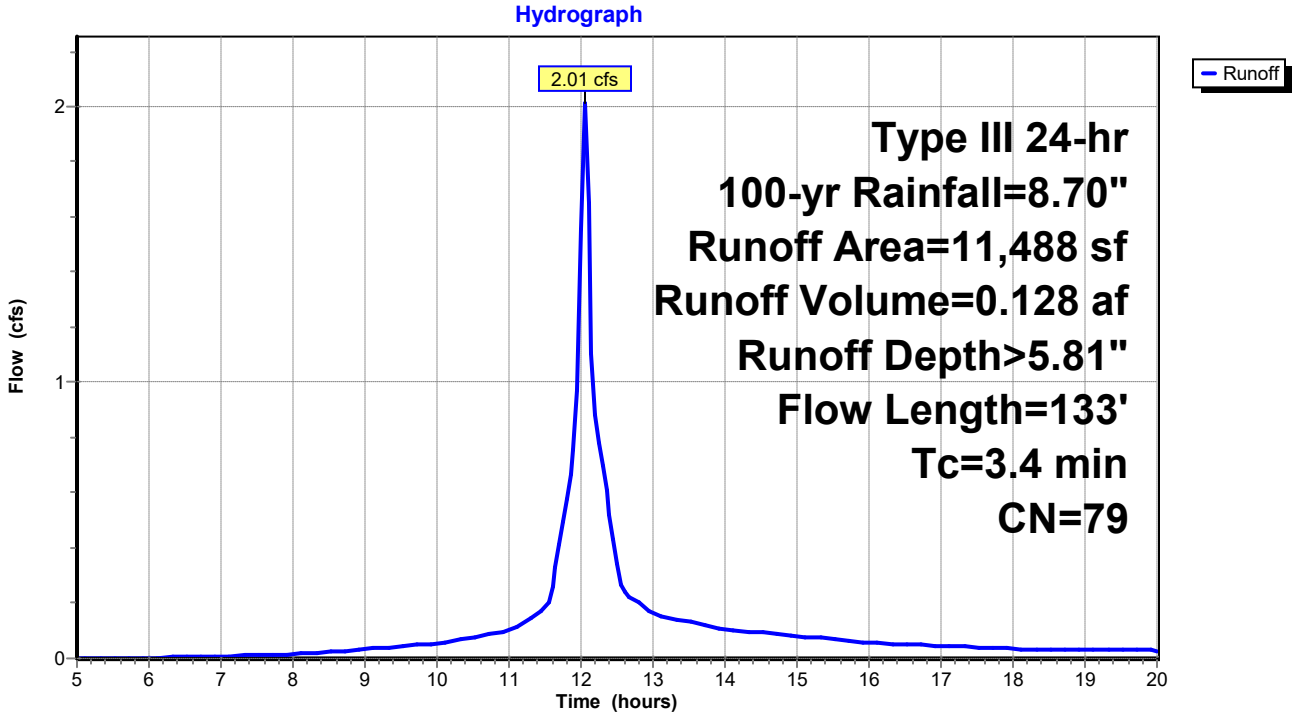

Summary for Subcatchment 3S: Post Subcatchment 3

Runoff = 2.37 cfs @ 12.07 hrs, Volume= 0.164 af, Depth> 6.40"
Routed to Pond 3P : Bioretention Filter Cell 2

Runoff by SCS TR-20 method, UH=SCS, Weighted-CN, Time Span= 5.00-20.00 hrs, dt= 0.05 hrs
Type III 24-hr 100-yr Rainfall=8.70"

	Area (sf)	CN	Description
	6,822	77	Woods, Good, HSG D
*	580	73	Biofiltration cell, Good, HSG D
*	3,768	98	Paved access drive, HSG D
	1,487	80	>75% Grass cover, Good, HSG D
*	708	98	Ledge, HSG D
	13,365	84	Weighted Average
	8,889		66.51% Pervious Area
	4,476		33.49% Impervious Area

Tc (min)	Length (feet)	Slope (ft/ft)	Velocity (ft/sec)	Capacity (cfs)	Description
4.2	43	0.2093	0.17		**Sheet Flow, Tc-1** Woods: Light underbrush n= 0.400 P2= 3.30"
0.7	214	0.0500	5.25	15.74	**Channel Flow, Tc-2** Area= 3.0 sf Perim= 9.2' r= 0.33' n= 0.030 Earth, grassed & winding
0.0	5	0.0500	3.35		**Shallow Concentrated Flow, Tc-3** Grassed Waterway Kv= 15.0 fps
4.9	262	Total			

Subcatchment 3S: Post Subcatchment 3

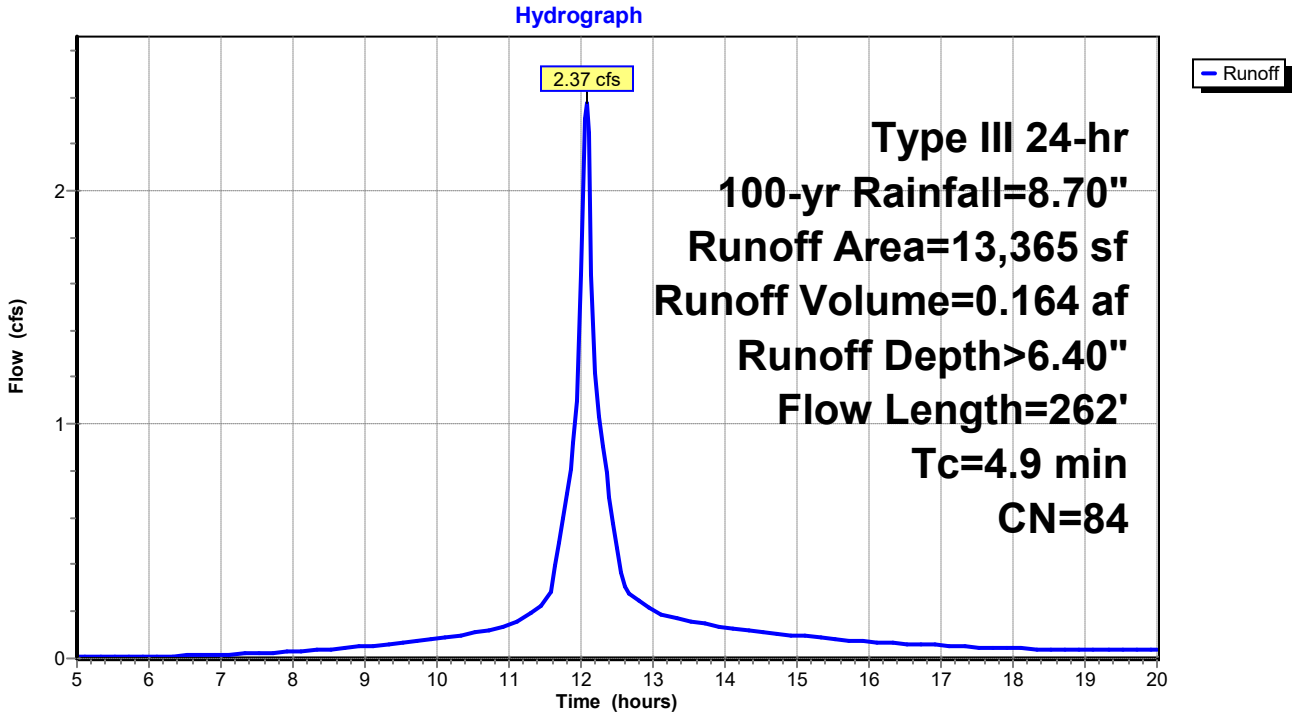

Summary for Subcatchment 4S: Post Subcatchment 4

Runoff = 2.71 cfs @ 12.10 hrs, Volume= 0.195 af, Depth> 5.80"
Routed to Link DP2 : DP2

Runoff by SCS TR-20 method, UH=SCS, Weighted-CN, Time Span= 5.00-20.00 hrs, dt= 0.05 hrs
Type III 24-hr 100-yr Rainfall=8.70"

	Area (sf)	CN	Description
*	295	98	Paved access drive, HSG D
	1,450	80	>75% Grass cover, Good, HSG D
	15,784	79	Woods, Fair, HSG D
	17,529	79	Weighted Average
	17,234		98.32% Pervious Area
	295		1.68% Impervious Area

Tc (min)	Length (feet)	Slope (ft/ft)	Velocity (ft/sec)	Capacity (cfs)	Description
6.8	62	0.1290	0.15		**Sheet Flow, Tc-1** Woods: Light underbrush n= 0.400 P2= 3.30"
0.4	64	0.2343	2.42		**Shallow Concentrated Flow, Tc-2** Woodland Kv= 5.0 fps
7.2	126	Total			

Subcatchment 4S: Post Subcatchment 4

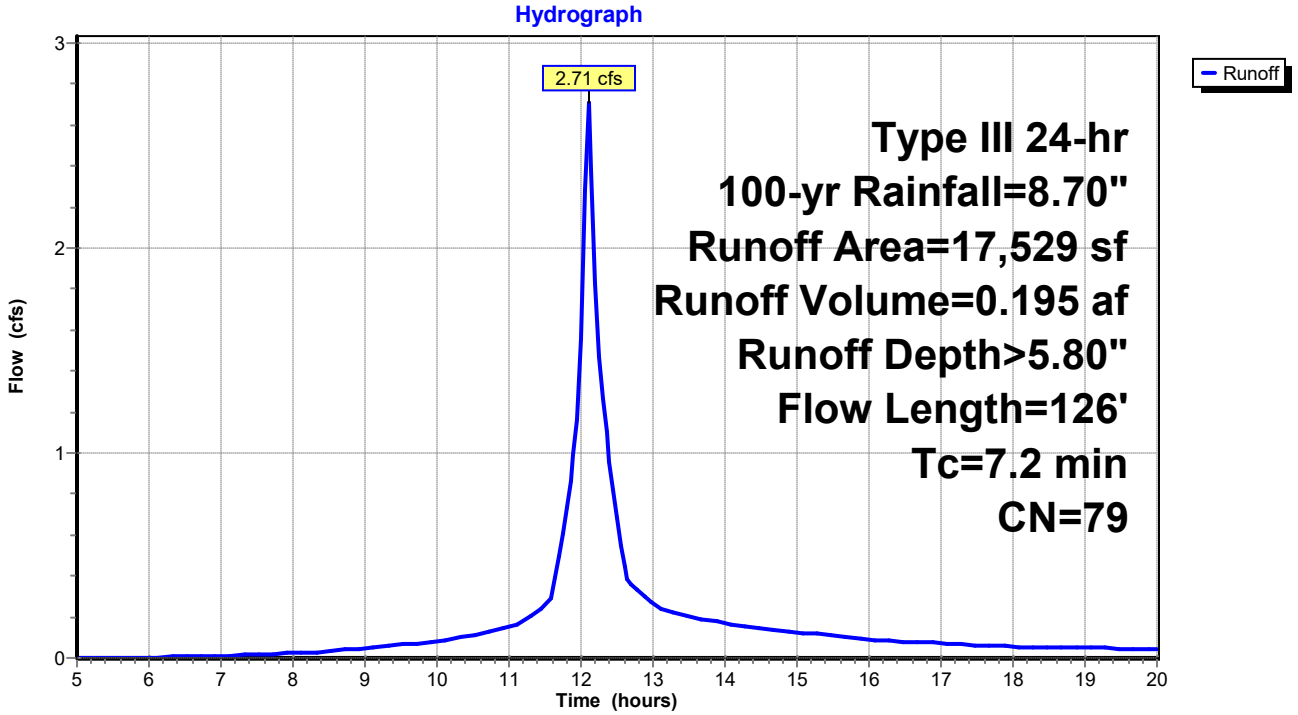

Summary for Subcatchment 5S: Post Subcatchment 5

Runoff = 9.35 cfs @ 12.10 hrs, Volume= 0.670 af, Depth> 5.92"
Routed to Reach DP3 : Shoreline 3

Runoff by SCS TR-20 method, UH=SCS, Weighted-CN, Time Span= 5.00-20.00 hrs, dt= 0.05 hrs
Type III 24-hr 100-yr Rainfall=8.70"

	Area (sf)	CN	Description
*	1,650	98	Paved acccess drive, HSG D
	751	98	Roofs, HSG D
*	6,955	88	Sand beach, HSG D
	3,872	96	Gravel surface, HSG D
	45,951	77	Woods, Good, HSG D
	59,179	80	Weighted Average
	56,778		95.94% Pervious Area
	2,401		4.06% Impervious Area

Tc (min)	Length (feet)	Slope (ft/ft)	Velocity (ft/sec)	Capacity (cfs)	Description
2.7	23	0.1740	0.14		**Sheet Flow, Tc-1** Woods: Light underbrush n= 0.400 P2= 3.30"
1.0	70	0.0574	1.20		**Shallow Concentrated Flow, Tc-2** Woodland Kv= 5.0 fps
0.5	170	0.1059	5.24		**Shallow Concentrated Flow, Tc-3** Unpaved Kv= 16.1 fps
2.5	140	0.0357	0.94		**Shallow Concentrated Flow, Tc-4** Woodland Kv= 5.0 fps
0.3	42	0.0714	2.67		**Shallow Concentrated Flow, Tc-5** Nearly Bare & Untilled Kv= 10.0 fps
7.0	445	Total			

Subcatchment 5S: Post Subcatchment 5

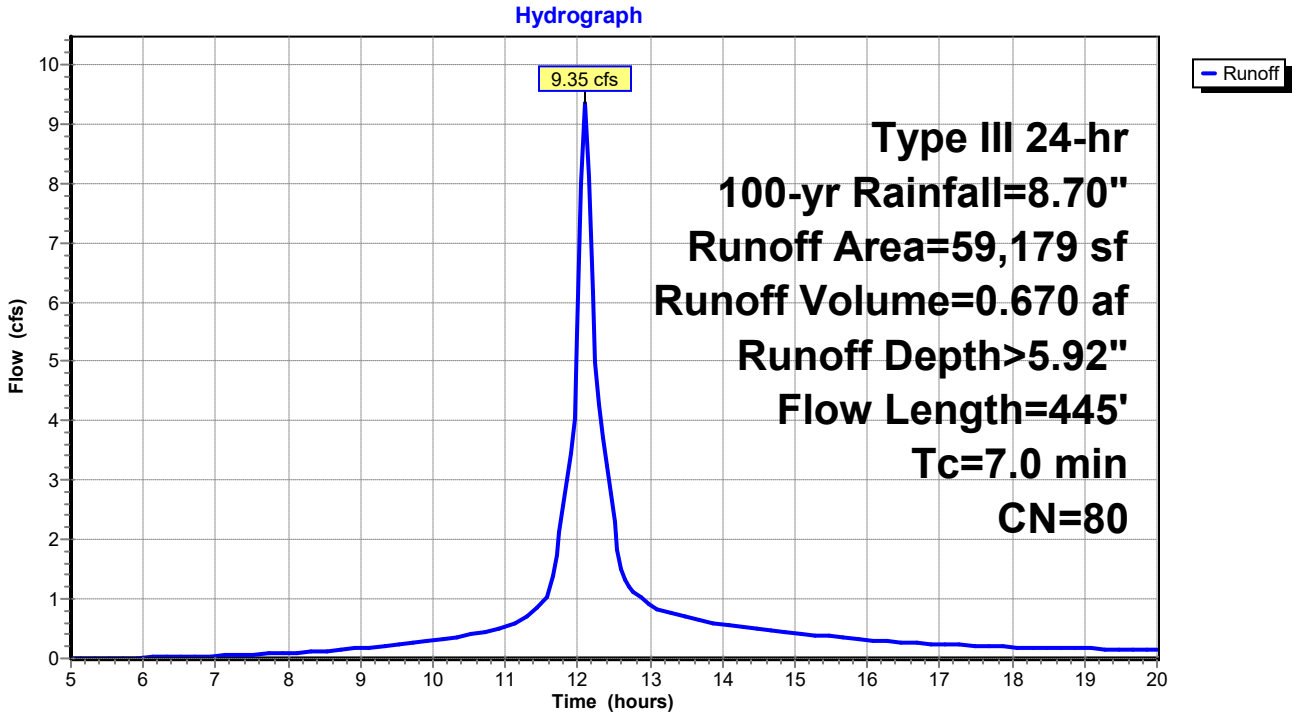

Summary for Reach 1R: Reach 1

Inflow Area = 0.226 ac, 50.01% Impervious, Inflow Depth > 6.68" for 100-yr event
Inflow = 1.97 cfs @ 12.02 hrs, Volume= 0.126 af
Outflow = 1.97 cfs @ 12.02 hrs, Volume= 0.126 af, Atten= 0%, Lag= 0.0 min
Routed to Link DP1 : DP1

Routing by Stor-Ind method, Time Span= 5.00-20.00 hrs, dt= 0.05 hrs

Reach 1R: Reach 1

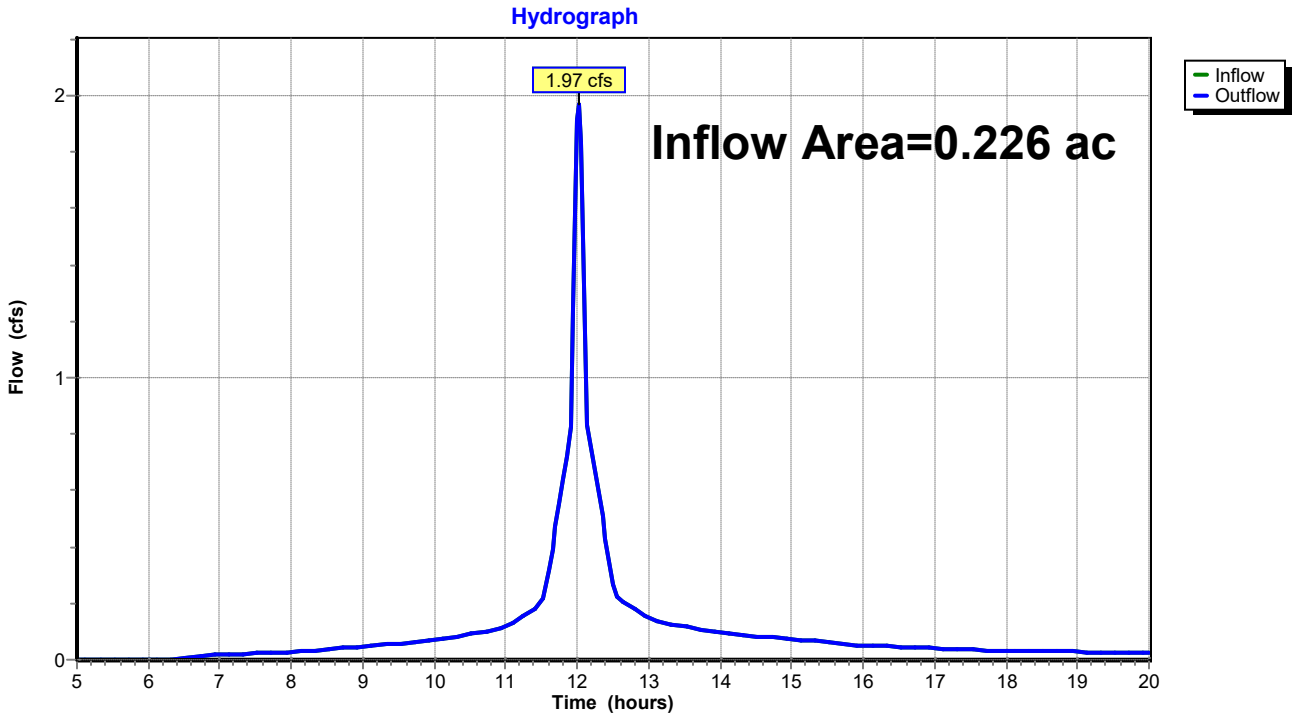

Summary for Reach 2R: Reach 2

Inflow Area = 0.307 ac, 33.49% Impervious, Inflow Depth > 6.25" for 100-yr event
Inflow = 2.27 cfs @ 12.10 hrs, Volume= 0.160 af
Outflow = 2.27 cfs @ 12.10 hrs, Volume= 0.160 af, Atten= 0%, Lag= 0.0 min
Routed to Link DP2 : DP2

Routing by Stor-Ind method, Time Span= 5.00-20.00 hrs, dt= 0.05 hrs

Reach 2R: Reach 2

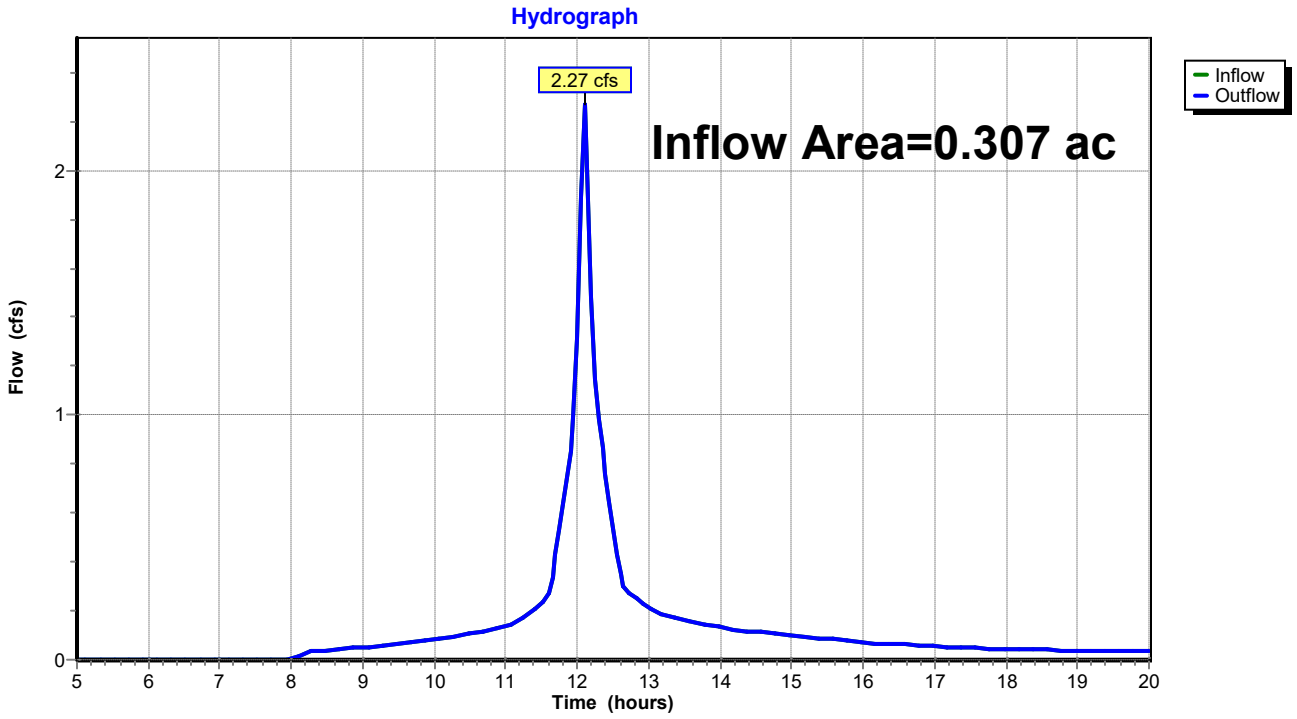

Summary for Reach DP3: Shoreline 3

Inflow Area = 1.359 ac, 4.06% Impervious, Inflow Depth > 5.92" for 100-yr event
Inflow = 9.35 cfs @ 12.10 hrs, Volume= 0.670 af
Outflow = 9.35 cfs @ 12.10 hrs, Volume= 0.670 af, Atten= 0%, Lag= 0.0 min
Routed to Reach SP1 : SACO RIVER / OCEAN

Routing by Stor-Ind method, Time Span= 5.00-20.00 hrs, dt= 0.05 hrs

Reach DP3: Shoreline 3

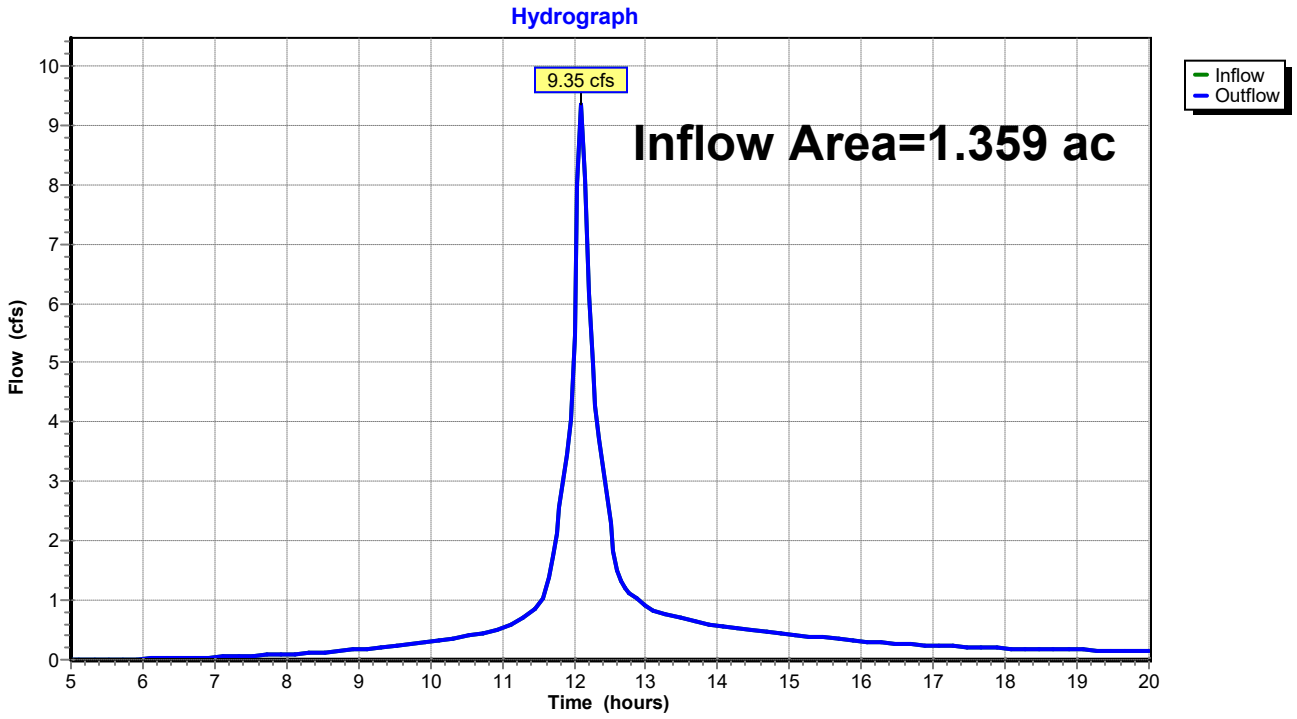

Summary for Reach SP1: SACO RIVER / OCEAN

Inflow Area = 2.557 ac, 11.96% Impervious, Inflow Depth > 6.00" for 100-yr event
Inflow = 17.21 cfs @ 12.09 hrs, Volume= 1.278 af
Outflow = 17.21 cfs @ 12.09 hrs, Volume= 1.278 af, Atten= 0%, Lag= 0.0 min

Routing by Stor-Ind method, Time Span= 5.00-20.00 hrs, dt= 0.05 hrs

Reach SP1: SACO RIVER / OCEAN

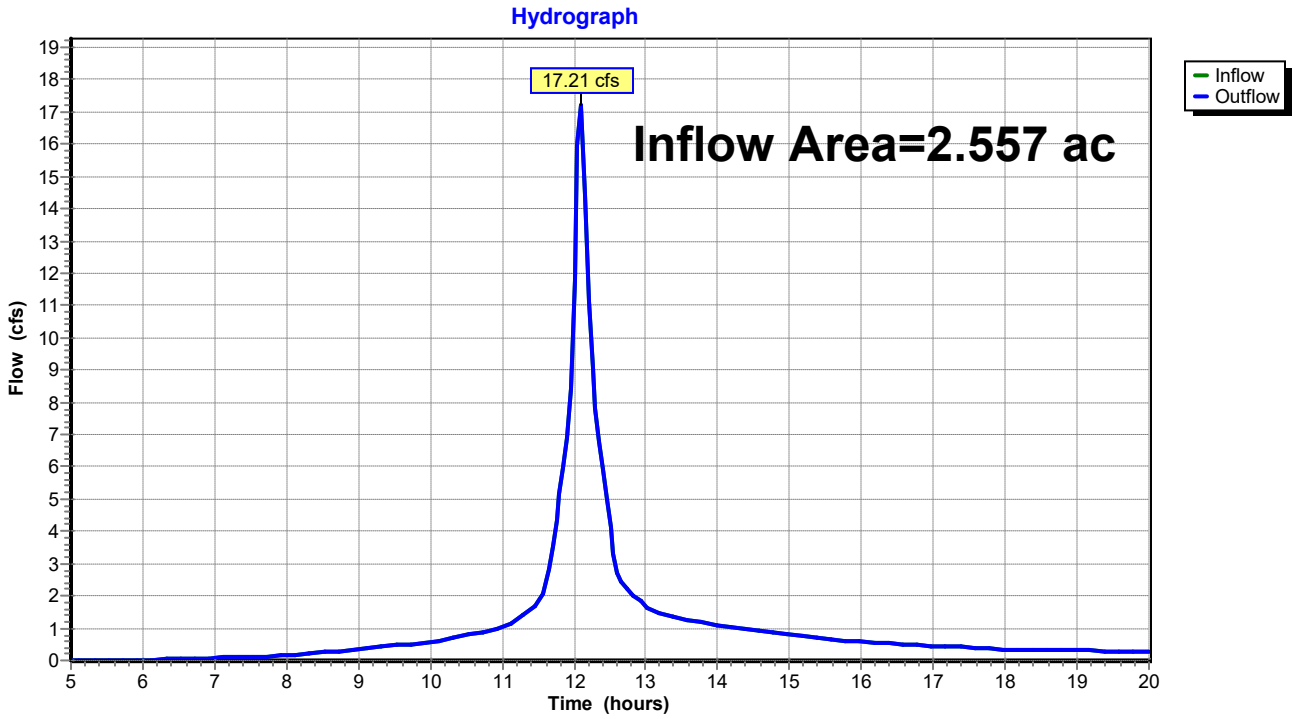

Summary for Pond 1P: Bioretention Filter Cell 1

Inflow Area = 0.226 ac, 50.01% Impervious, Inflow Depth > 6.75" for 100-yr event
Inflow = 2.01 cfs @ 12.01 hrs, Volume= 0.127 af
Outflow = 1.97 cfs @ 12.02 hrs, Volume= 0.126 af, Atten= 2%, Lag= 0.6 min
Primary = 1.97 cfs @ 12.02 hrs, Volume= 0.126 af
Routed to Pond 2P : CB-1

Routing by Stor-Ind method, Time Span= 5.00-20.00 hrs, dt= 0.05 hrs
Peak Elev= 18.25' @ 12.02 hrs Surf.Area= 294 sf Storage= 118 cf

Plug-Flow detention time= 9.1 min calculated for 0.125 af (99% of inflow)
Center-of-Mass det. time= 4.7 min (754.9 - 750.3)

Volume	Invert	Avail.Storage	Storage Description
#1	17.50'	200 cf	**Custom Stage Data (Prismatic)** Listed below (Recalc)

Elevation (feet)	Surf.Area (sq-ft)	Inc.Store (cubic-feet)	Cum.Store (cubic-feet)
17.50	0	0	0
18.00	213	53	53
18.50	372	146	200

Device	Routing	Invert	Outlet Devices
#1	Primary	18.00'	**18.0" Horiz. Orifice/Grate** C= 0.600 in 24.0" Grate (56% open area) Limited to weir flow at low heads

Primary OutFlow Max=1.88 cfs @ 12.02 hrs HW=18.25' (Free Discharge)
↑—**1=Orifice/Grate** (Weir Controls 1.88 cfs @ 1.62 fps)

Pond 1P: Bioretention Filter Cell 1

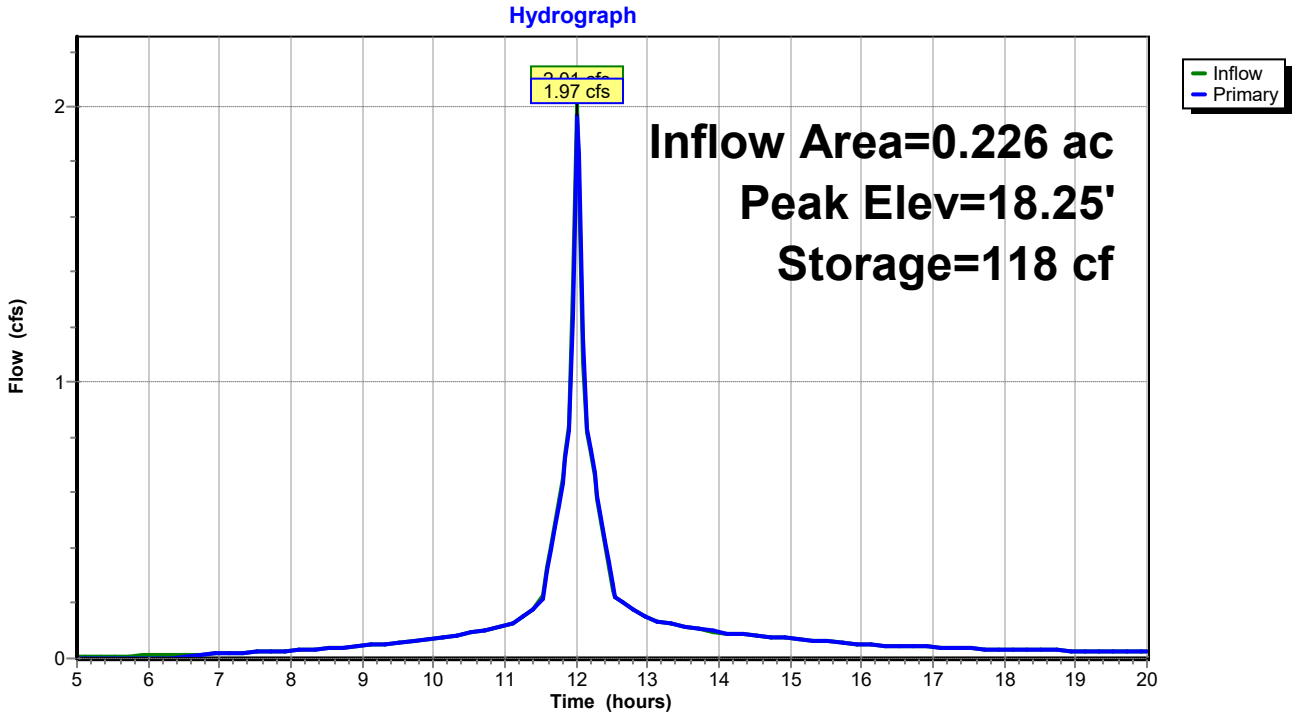

Summary for Pond 2P: CB-1

Inflow Area = 0.226 ac, 50.01% Impervious, Inflow Depth > 6.68" for 100-yr event
Inflow = 1.97 cfs @ 12.02 hrs, Volume= 0.126 af
Outflow = 1.97 cfs @ 12.02 hrs, Volume= 0.126 af, Atten= 0%, Lag= 0.0 min
Primary = 1.97 cfs @ 12.02 hrs, Volume= 0.126 af
Routed to Reach 1R : Reach 1

Routing by Stor-Ind method, Time Span= 5.00-20.00 hrs, dt= 0.05 hrs
Peak Elev= 14.54' @ 12.02 hrs

Device	Routing	Invert	Outlet Devices
#1	Primary	13.75'	**15.0" Round Culvert** L= 48.0' CPP, projecting, no headwall, Ke= 0.900 Inlet / Outlet Invert= 13.75' / 12.00' S= 0.0365 '/' Cc= 0.900 n= 0.013 Corrugated PE, smooth interior, Flow Area= 1.23 sf

Primary OutFlow Max=1.88 cfs @ 12.02 hrs HW=14.52' (Free Discharge)
1=Culvert (Inlet Controls 1.88 cfs @ 2.36 fps)

Pond 2P: CB-1

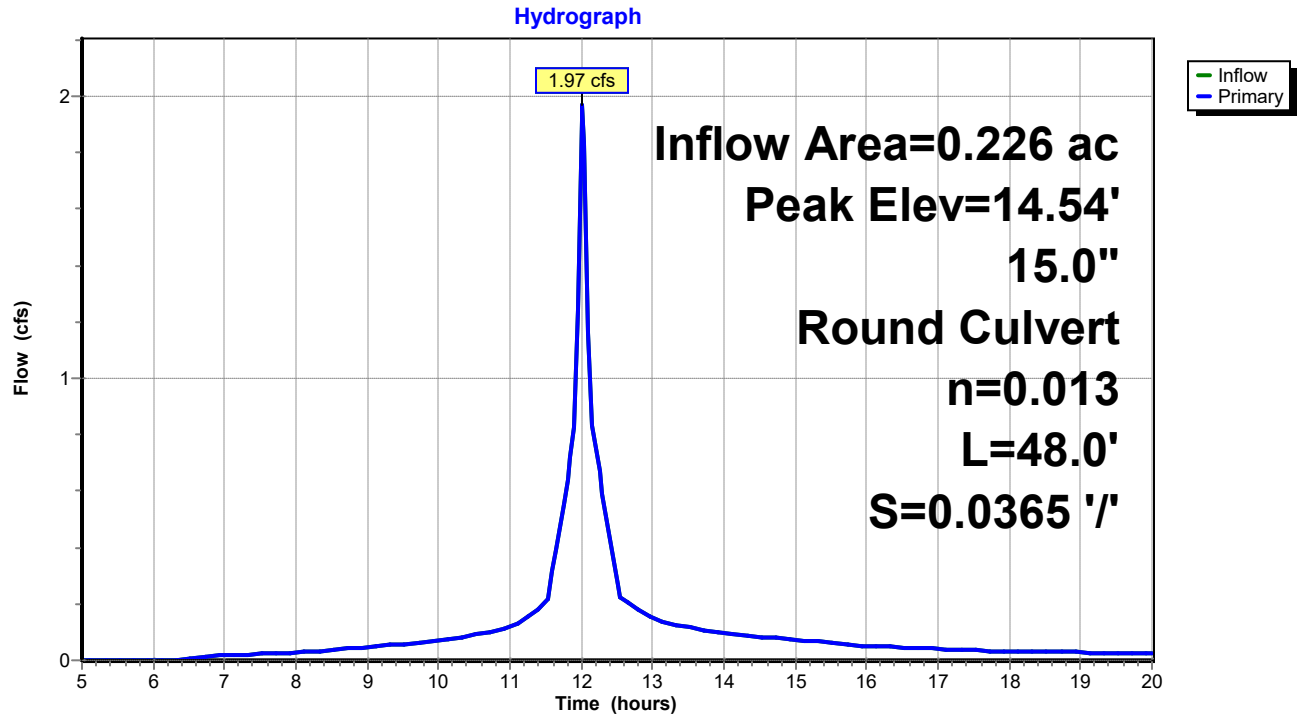

Summary for Pond 3P: Bioretention Filter Cell 2

Inflow Area = 0.307 ac, 33.49% Impervious, Inflow Depth > 6.40" for 100-yr event
Inflow = 2.37 cfs @ 12.07 hrs, Volume= 0.164 af
Outflow = 2.35 cfs @ 12.08 hrs, Volume= 0.163 af, Atten= 1%, Lag= 0.6 min
Primary = 2.35 cfs @ 12.08 hrs, Volume= 0.163 af
Routed to Pond 4P : CB-2

Routing by Stor-Ind method, Time Span= 5.00-20.00 hrs, dt= 0.05 hrs
Peak Elev= 23.79' @ 12.08 hrs Surf.Area= 263 sf Storage= 103 cf

Plug-Flow detention time= 5.8 min calculated for 0.163 af (99% of inflow)
Center-of-Mass det. time= 3.0 min (762.5 - 759.5)

Volume	Invert	Avail.Storage	Storage Description
#1	23.00'	380 cf	**Custom Stage Data (Prismatic)** Listed below (Recalc)

Elevation (feet)	Surf.Area (sq-ft)	Inc.Store (cubic-feet)	Cum.Store (cubic-feet)
23.00	0	0	0
24.00	335	168	168
24.50	515	213	380

Device	Routing	Invert	Outlet Devices
#1	Primary	23.50'	**18.0" Horiz. Orifice/Grate** C= 0.600 in 24.0" Grate (56% open area) Limited to weir flow at low heads

Primary OutFlow Max=2.28 cfs @ 12.08 hrs HW=23.78' (Free Discharge)
↑**1=Orifice/Grate** (Weir Controls 2.28 cfs @ 1.73 fps)

Pond 3P: Bioretention Filter Cell 2

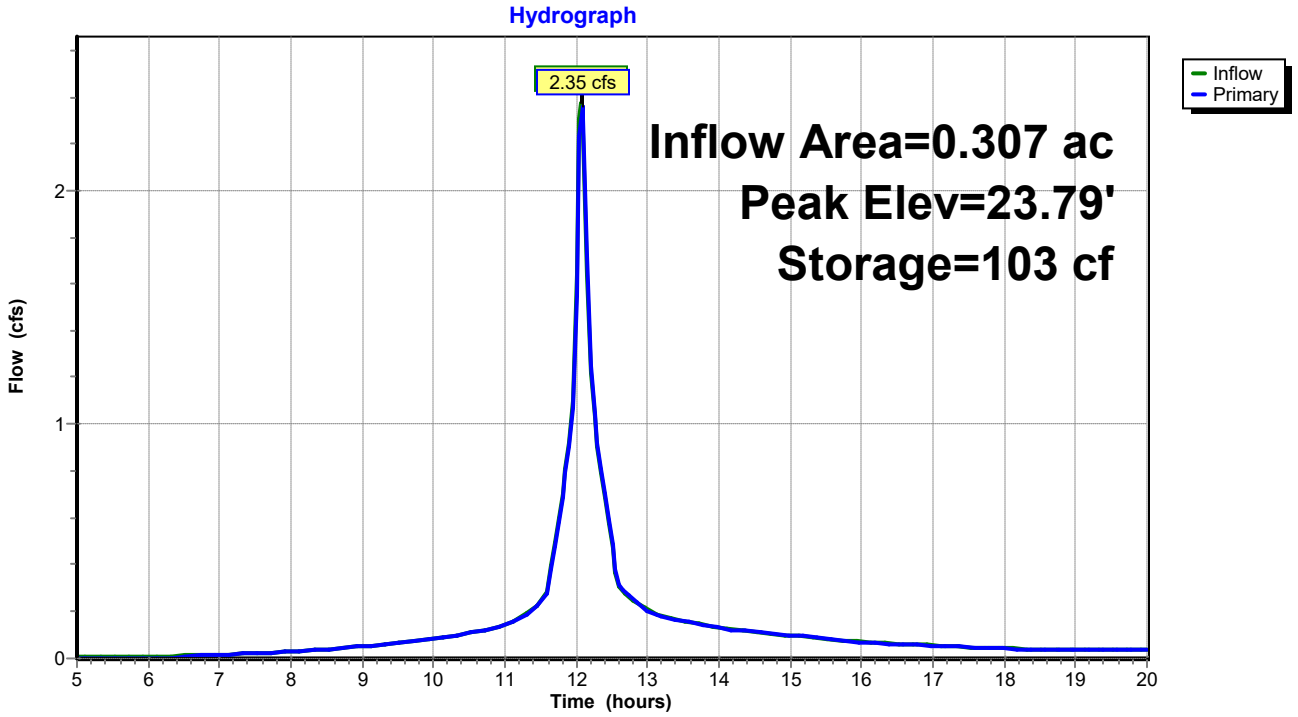

Summary for Pond 4P: CB-2

Inflow Area = 0.307 ac, 33.49% Impervious, Inflow Depth > 6.36" for 100-yr event
Inflow = 2.35 cfs @ 12.08 hrs, Volume= 0.163 af
Outflow = 2.35 cfs @ 12.08 hrs, Volume= 0.163 af, Atten= 0%, Lag= 0.0 min
Primary = 2.35 cfs @ 12.08 hrs, Volume= 0.163 af
Routed to Pond 5P : Level Lip Speader

Routing by Stor-Ind method, Time Span= 5.00-20.00 hrs, dt= 0.05 hrs
Peak Elev= 19.56' @ 12.08 hrs

Device	Routing	Invert	Outlet Devices
#1	Primary	18.75'	**18.0" Round Culvert** L= 40.0' CPP, projecting, no headwall, Ke= 0.900 Inlet / Outlet Invert= 18.75' / 18.00' S= 0.0187 '/' Cc= 0.900 n= 0.013 Corrugated PE, smooth interior, Flow Area= 1.77 sf

Primary OutFlow Max=2.28 cfs @ 12.08 hrs HW=19.54' (Free Discharge)
1=Culvert (Inlet Controls 2.28 cfs @ 2.40 fps)

Pond 4P: CB-2

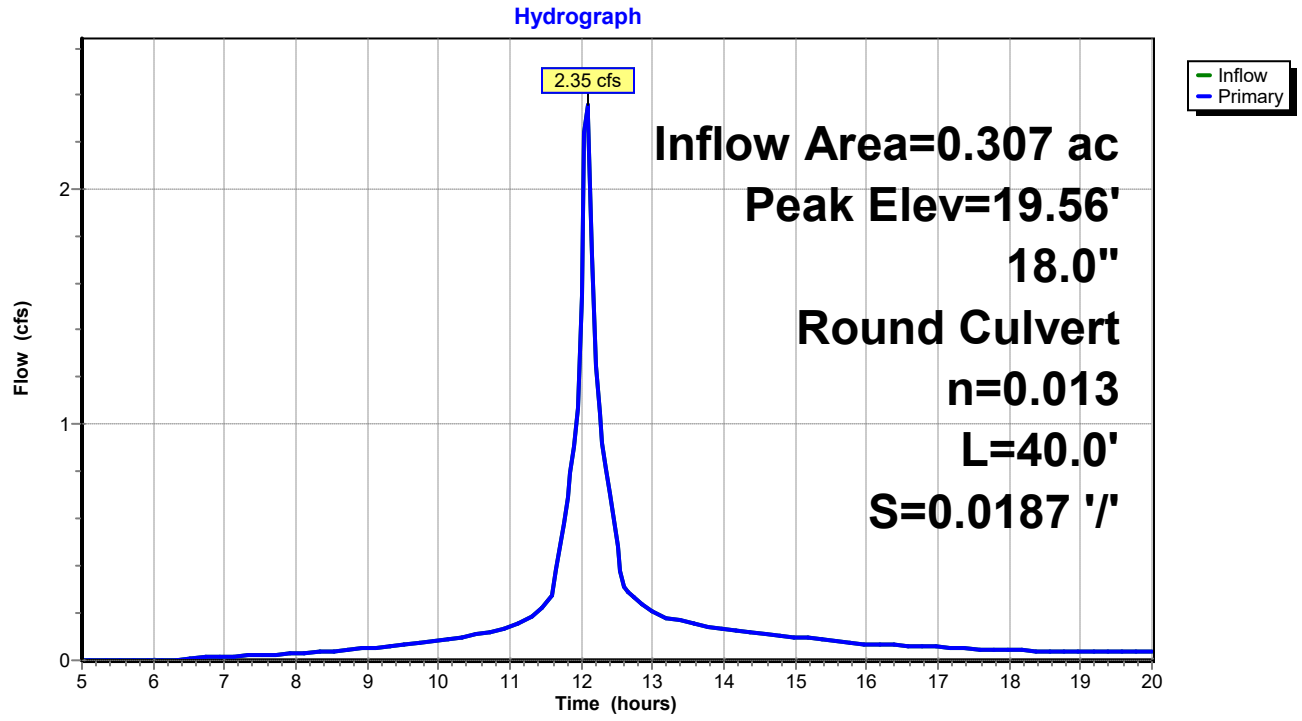

Summary for Pond 5P: Level Lip Speader

Inflow Area = 0.307 ac, 33.49% Impervious, Inflow Depth > 6.36" for 100-yr event
Inflow = 2.35 cfs @ 12.08 hrs, Volume= 0.163 af
Outflow = 2.27 cfs @ 12.10 hrs, Volume= 0.160 af, Atten= 4%, Lag= 1.5 min
Primary = 2.27 cfs @ 12.10 hrs, Volume= 0.160 af
Routed to Reach 2R : Reach 2

Routing by Stor-Ind method, Time Span= 5.00-20.00 hrs, dt= 0.05 hrs
Peak Elev= 18.00' @ 8.10 hrs Surf.Area= 168 sf Storage= 115 cf
Flood Elev= 20.00' Surf.Area= 168 sf Storage= 115 cf

Plug-Flow detention time= 13.3 min calculated for 0.160 af (98% of inflow)
Center-of-Mass det. time= 6.5 min (769.1 - 762.5)

Volume	Invert	Avail.Storage	Storage Description
#1	17.00'	115 cf	**Custom Stage Data (Prismatic)** Listed below (Recalc)

Elevation (feet)	Surf.Area (sq-ft)	Voids (%)	Inc.Store (cubic-feet)	Cum.Store (cubic-feet)
17.00	61	0.0	0	0
18.00	168	100.0	115	115

Device	Routing	Invert	Outlet Devices
#0	Primary	18.00'	**Automatic Storage Overflow** (Discharged without head)

Primary OutFlow Max=0.00 cfs @ 12.10 hrs HW=18.00' (Free Discharge)

Pond 5P: Level Lip Speader

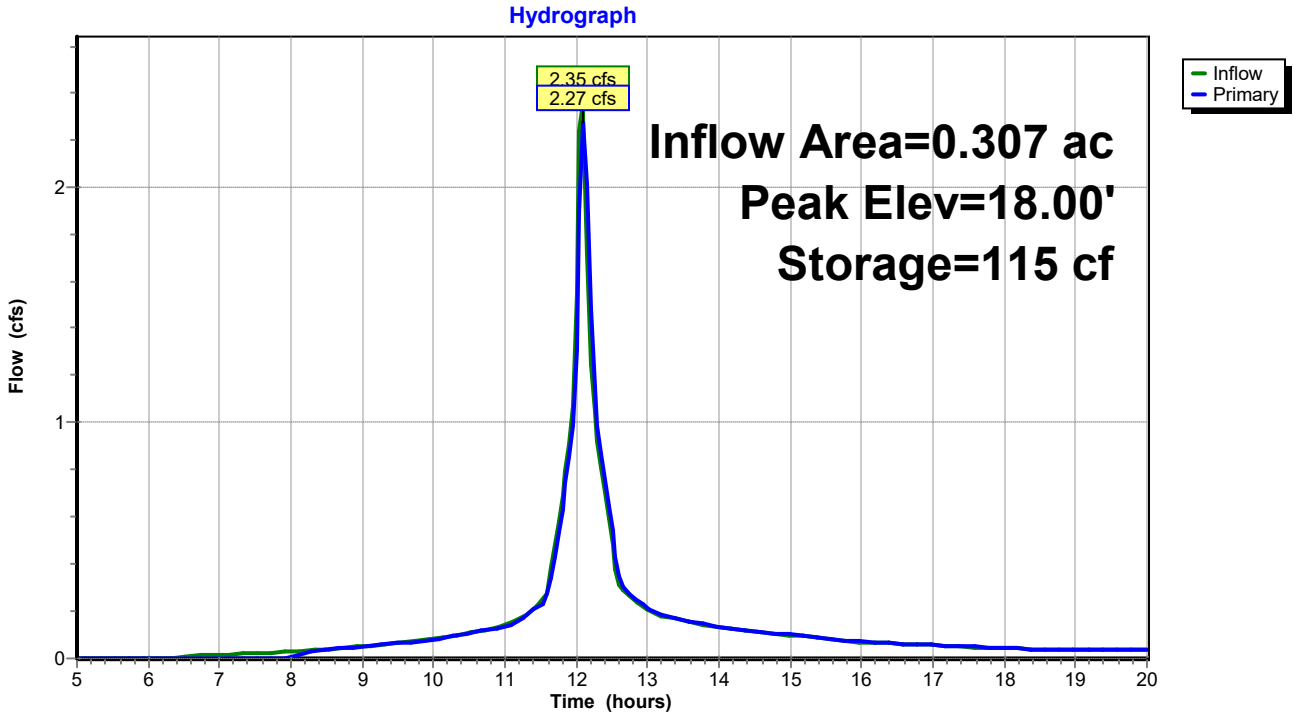

Summary for Link DP1: DP1

Inflow Area = 0.489 ac, 28.87% Impervious, Inflow Depth > 6.21" for 100-yr event
Inflow = 3.88 cfs @ 12.04 hrs, Volume= 0.253 af
Primary = 3.88 cfs @ 12.04 hrs, Volume= 0.253 af, Atten= 0%, Lag= 0.0 min
Routed to Reach SP1 : SACO RIVER / OCEAN

Primary outflow = Inflow, Time Span= 5.00-20.00 hrs, dt= 0.05 hrs

Link DP1: DP1

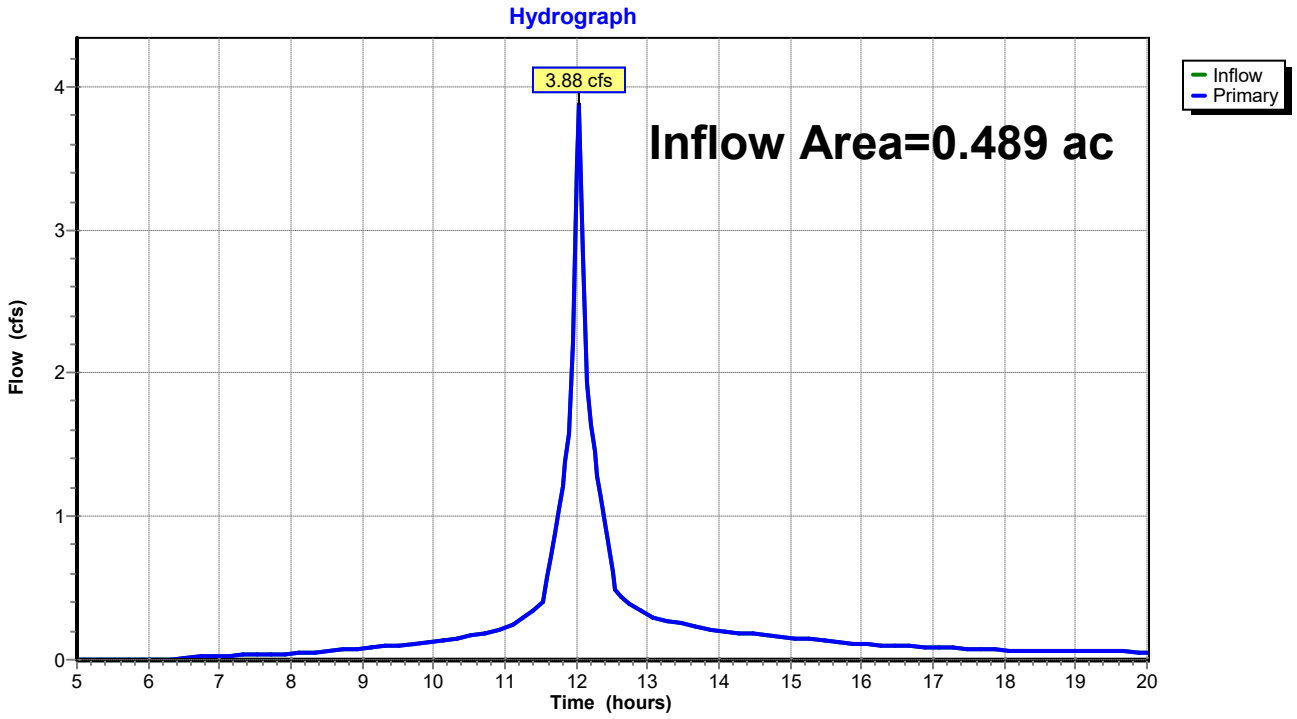

Summary for Link DP2: DP2

Inflow Area = 0.709 ac, 15.44% Impervious, Inflow Depth > 6.00" for 100-yr event
Inflow = 4.98 cfs @ 12.10 hrs, Volume= 0.354 af
Primary = 4.98 cfs @ 12.10 hrs, Volume= 0.354 af, Atten= 0%, Lag= 0.0 min
Routed to Reach SP1 : SACO RIVER / OCEAN

Primary outflow = Inflow, Time Span= 5.00-20.00 hrs, dt= 0.05 hrs

Link DP2: DP2

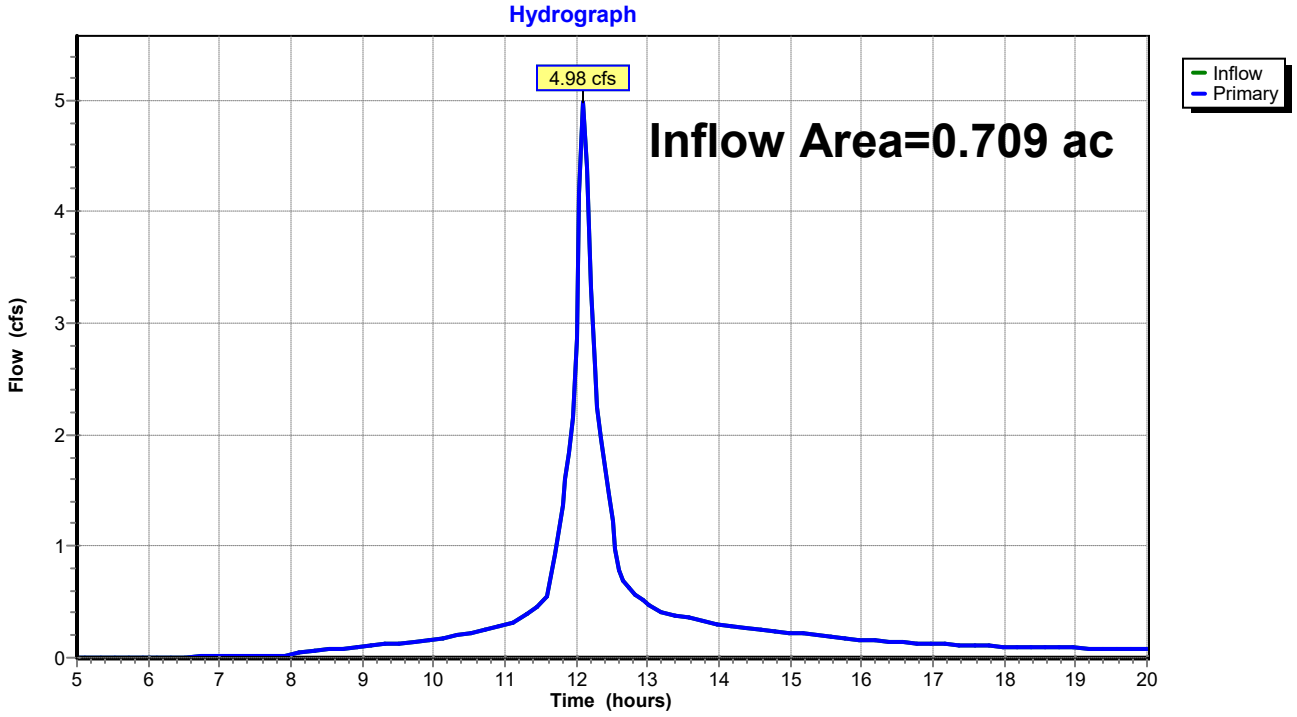

Time span=5.00-20.00 hrs, dt=0.05 hrs, 301 points
Runoff by SCS TR-20 method, UH=SCS, Weighted-CN
Reach routing by Stor-Ind method - Pond routing by Stor-Ind method

Subcatchment 1S: Post Subcatchment 1 Runoff Area=9,832 sf 50.01% Impervious Runoff Depth>0.20"
Flow Length=172' Tc=0.8 min CN=87 Runoff=0.06 cfs 0.004 af

Subcatchment 2S: Post Subcatchment 2 Runoff Area=11,488 sf 10.78% Impervious Runoff Depth>0.06"
Flow Length=133' Tc=3.4 min CN=79 Runoff=0.01 cfs 0.001 af

Subcatchment 3S: Post Subcatchment 3 Runoff Area=13,365 sf 33.49% Impervious Runoff Depth>0.13"
Flow Length=262' Tc=4.9 min CN=84 Runoff=0.04 cfs 0.003 af

Subcatchment 4S: Post Subcatchment 4 Runoff Area=17,529 sf 1.68% Impervious Runoff Depth>0.06"
Flow Length=126' Tc=7.2 min CN=79 Runoff=0.01 cfs 0.002 af

Subcatchment 5S: Post Subcatchment 5 Runoff Area=59,179 sf 4.06% Impervious Runoff Depth>0.07"
Flow Length=445' Tc=7.0 min CN=80 Runoff=0.05 cfs 0.008 af

Reach 1R: Reach 1 Inflow=0.02 cfs 0.003 af
Outflow=0.02 cfs 0.003 af

Reach 2R: Reach 2 Inflow=0.00 cfs 0.000 af
Outflow=0.00 cfs 0.000 af

Reach DP3: Shoreline 3 Inflow=0.05 cfs 0.008 af
Outflow=0.05 cfs 0.008 af

Reach SP1: SACO RIVER / OCEAN Inflow=0.09 cfs 0.014 af
Outflow=0.09 cfs 0.014 af

Pond 1P: Bioretention Filter Cell 1 Peak Elev=18.01' Storage=56 cf Inflow=0.06 cfs 0.004 af
Outflow=0.02 cfs 0.003 af

Pond 2P: CB-1 Peak Elev=13.83' Inflow=0.02 cfs 0.003 af
15.0" Round Culvert n=0.013 L=48.0' S=0.0365 '/' Outflow=0.02 cfs 0.003 af

Pond 3P: Bioretention Filter Cell 2 Peak Elev=23.51' Storage=44 cf Inflow=0.04 cfs 0.003 af
Outflow=0.02 cfs 0.002 af

Pond 4P: CB-2 Peak Elev=18.81' Inflow=0.02 cfs 0.002 af
18.0" Round Culvert n=0.013 L=40.0' S=0.0187 '/' Outflow=0.02 cfs 0.002 af

Pond 5P: Level Lip Speader Peak Elev=17.95' Storage=106 cf Inflow=0.02 cfs 0.002 af
Outflow=0.00 cfs 0.000 af

Link DP1: DP1 Inflow=0.03 cfs 0.004 af
Primary=0.03 cfs 0.004 af

Link DP2: DP2 Inflow=0.01 cfs 0.002 af
Primary=0.01 cfs 0.002 af

Total Runoff Area = 2.557 ac Runoff Volume = 0.018 af Average Runoff Depth = 0.09"
88.04% Pervious = 2.251 ac 11.96% Impervious = 0.306 ac

Summary for Subcatchment 1S: Post Subcatchment 1

Runoff = 0.06 cfs @ 12.03 hrs, Volume= 0.004 af, Depth> 0.20"
Routed to Pond 1P : Bioretention Filter Cell 1

Runoff by SCS TR-20 method, UH=SCS, Weighted-CN, Time Span= 5.00-20.00 hrs, dt= 0.05 hrs
Type III 24-hr WQ Rainfall=1.00"

	Area (sf)	CN	Description
	3,430	77	Woods, Good, HSG D
*	982	98	Ledge, HSG D
	595	80	>75% Grass cover, Good, HSG D
*	3,935	98	Paved Access Drive, HSG D
*	890	73	Bioretention Filter Cell, Good, HSG D
	9,832	87	Weighted Average
	4,915		49.99% Pervious Area
	4,917		50.01% Impervious Area

Tc (min)	Length (feet)	Slope (ft/ft)	Velocity (ft/sec)	Capacity (cfs)	Description
0.4	46	0.0500	1.73		**Sheet Flow, Tc-1** Smooth surfaces n= 0.011 P2= 3.30"
0.3	102	0.0500	5.25	15.74	**Channel Flow, Tc-2** Area= 3.0 sf Perim= 9.2' r= 0.33' n= 0.030 Earth, grassed & winding
0.1	24	0.0625	3.75		**Shallow Concentrated Flow, Tc-3** Grassed Waterway Kv= 15.0 fps
0.8	172	Total			

Subcatchment 1S: Post Subcatchment 1

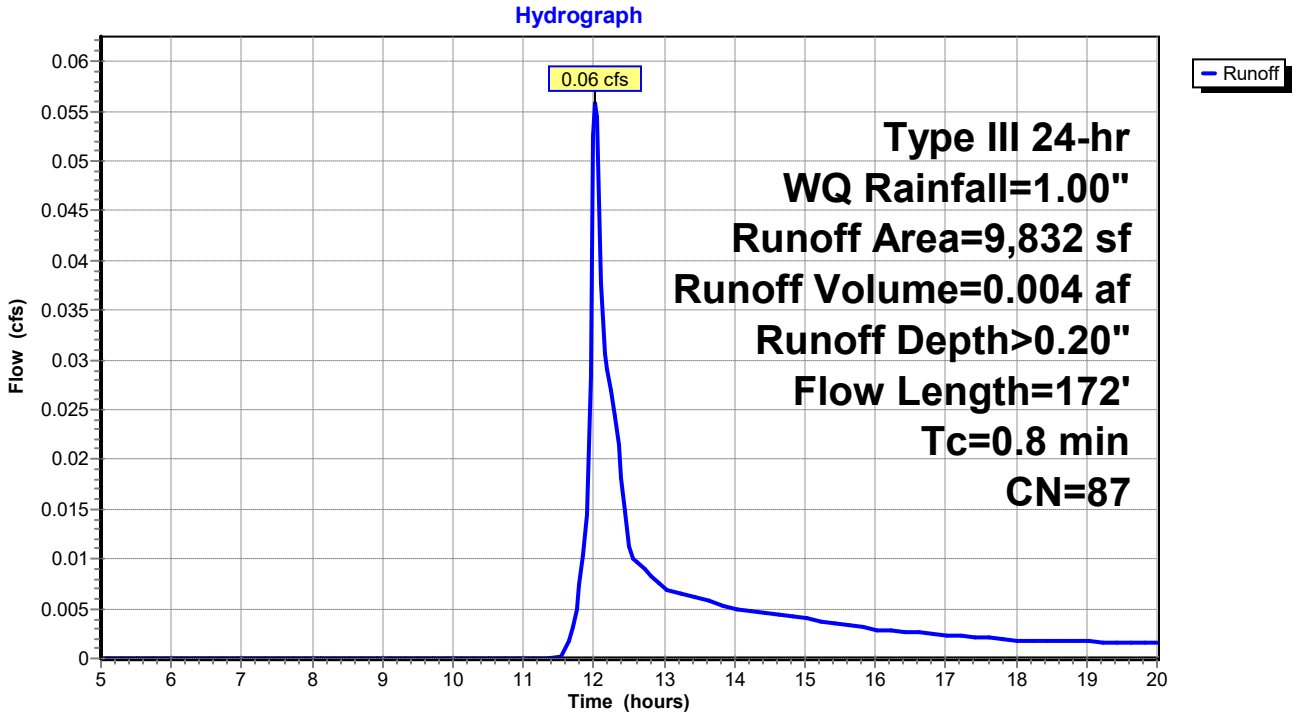

Summary for Subcatchment 2S: Post Subcatchment 2

Runoff = 0.01 cfs @ 12.31 hrs, Volume= 0.001 af, Depth> 0.06"
Routed to Link DP1 : DP1

Runoff by SCS TR-20 method, UH=SCS, Weighted-CN, Time Span= 5.00-20.00 hrs, dt= 0.05 hrs
Type III 24-hr WQ Rainfall=1.00"

Area (sf)	CN	Description
10,250	77	Woods, Good, HSG D
1,238	98	Paved parking, HSG D
11,488	79	Weighted Average
10,250		89.22% Pervious Area
1,238		10.78% Impervious Area

Tc (min)	Length (feet)	Slope (ft/ft)	Velocity (ft/sec)	Capacity (cfs)	Description
2.5	21	0.1905	0.14		**Sheet Flow, Tc-1** Woods: Light underbrush n= 0.400 P2= 3.30"
0.9	112	0.1696	2.06		**Shallow Concentrated Flow, Tc-2** Woodland Kv= 5.0 fps
3.4	133	Total			

Subcatchment 2S: Post Subcatchment 2

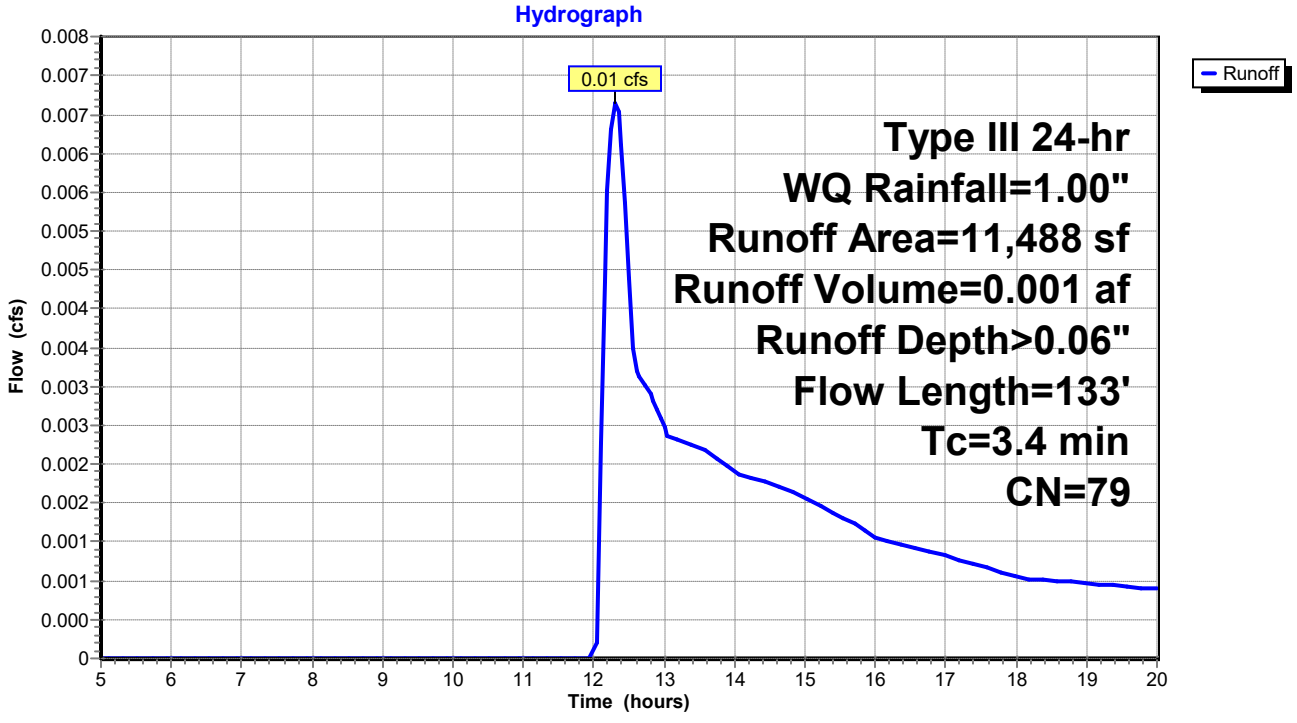

Summary for Subcatchment 3S: Post Subcatchment 3

Runoff = 0.04 cfs @ 12.11 hrs, Volume= 0.003 af, Depth> 0.13"
Routed to Pond 3P : Bioretention Filter Cell 2

Runoff by SCS TR-20 method, UH=SCS, Weighted-CN, Time Span= 5.00-20.00 hrs, dt= 0.05 hrs
Type III 24-hr WQ Rainfall=1.00"

	Area (sf)	CN	Description
	6,822	77	Woods, Good, HSG D
*	580	73	Biofiltration cell, Good, HSG D
*	3,768	98	Paved access drive, HSG D
	1,487	80	>75% Grass cover, Good, HSG D
*	708	98	Ledge, HSG D
	13,365	84	Weighted Average
	8,889		66.51% Pervious Area
	4,476		33.49% Impervious Area

Tc (min)	Length (feet)	Slope (ft/ft)	Velocity (ft/sec)	Capacity (cfs)	Description
4.2	43	0.2093	0.17		**Sheet Flow, Tc-1** Woods: Light underbrush n= 0.400 P2= 3.30"
0.7	214	0.0500	5.25	15.74	**Channel Flow, Tc-2** Area= 3.0 sf Perim= 9.2' r= 0.33' n= 0.030 Earth, grassed & winding
0.0	5	0.0500	3.35		**Shallow Concentrated Flow, Tc-3** Grassed Waterway Kv= 15.0 fps
4.9	262	Total			

Subcatchment 3S: Post Subcatchment 3

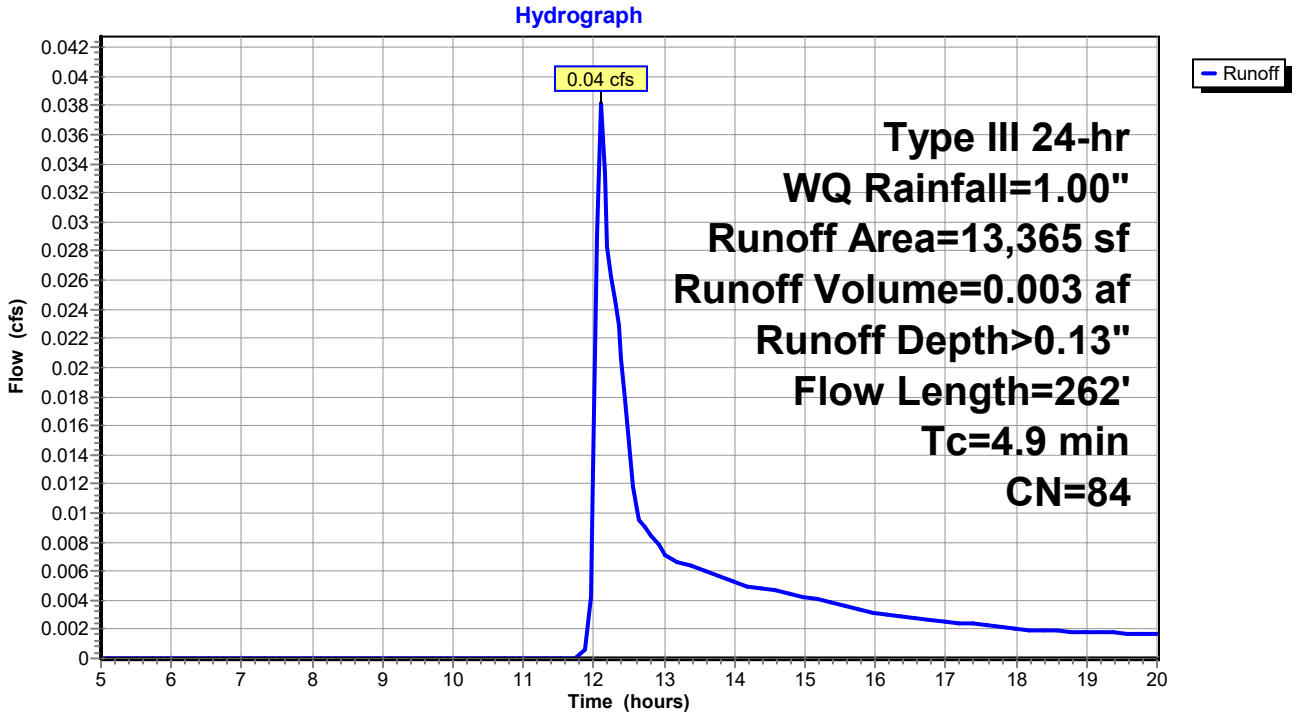

Summary for Subcatchment 4S: Post Subcatchment 4

Runoff = 0.01 cfs @ 12.38 hrs, Volume= 0.002 af, Depth> 0.06"
Routed to Link DP2 : DP2

Runoff by SCS TR-20 method, UH=SCS, Weighted-CN, Time Span= 5.00-20.00 hrs, dt= 0.05 hrs
Type III 24-hr WQ Rainfall=1.00"

	Area (sf)	CN	Description
*	295	98	Paved access drive, HSG D
	1,450	80	>75% Grass cover, Good, HSG D
	15,784	79	Woods, Fair, HSG D
	17,529	79	Weighted Average
	17,234		98.32% Pervious Area
	295		1.68% Impervious Area

Tc (min)	Length (feet)	Slope (ft/ft)	Velocity (ft/sec)	Capacity (cfs)	Description
6.8	62	0.1290	0.15		**Sheet Flow, Tc-1** Woods: Light underbrush n= 0.400 P2= 3.30"
0.4	64	0.2343	2.42		**Shallow Concentrated Flow, Tc-2** Woodland Kv= 5.0 fps
7.2	126	Total			

Subcatchment 4S: Post Subcatchment 4

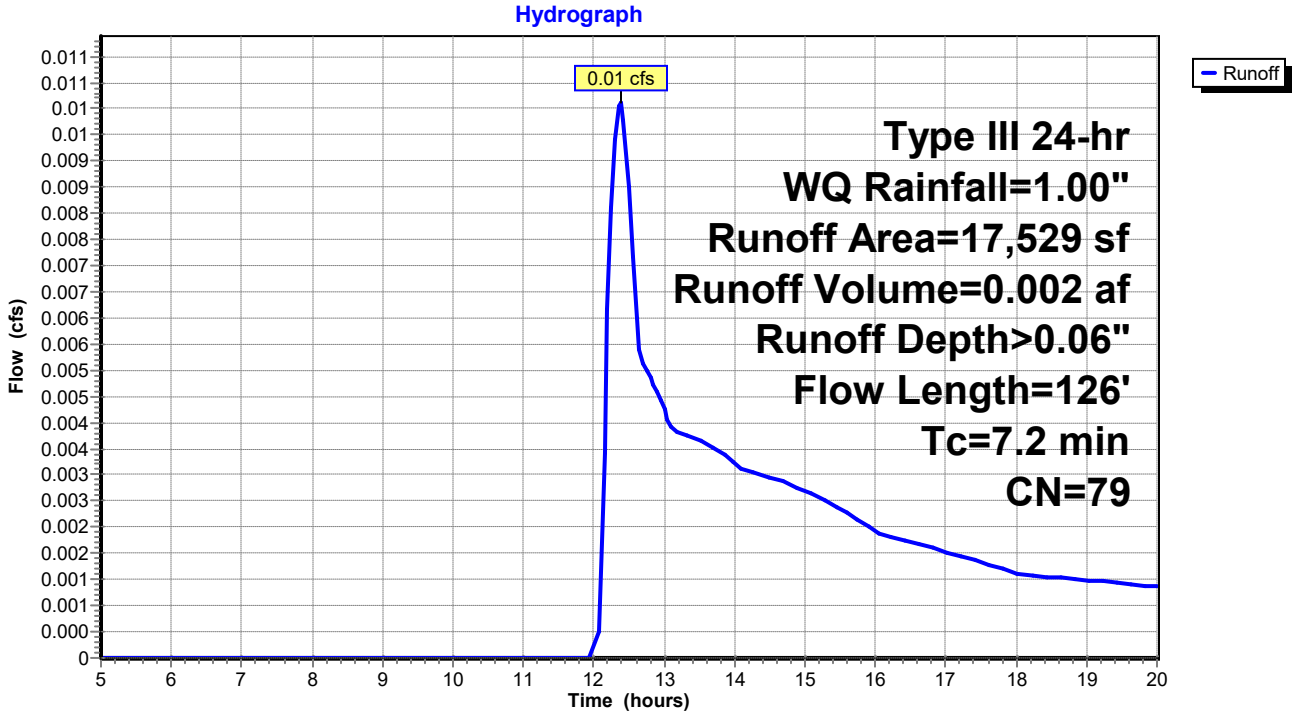

Summary for Subcatchment 5S: Post Subcatchment 5

Runoff = 0.05 cfs @ 12.34 hrs, Volume= 0.008 af, Depth> 0.07"
Routed to Reach DP3 : Shoreline 3

Runoff by SCS TR-20 method, UH=SCS, Weighted-CN, Time Span= 5.00-20.00 hrs, dt= 0.05 hrs
Type III 24-hr WQ Rainfall=1.00"

	Area (sf)	CN	Description
*	1,650	98	Paved acccess drive, HSG D
	751	98	Roofs, HSG D
*	6,955	88	Sand beach, HSG D
	3,872	96	Gravel surface, HSG D
	45,951	77	Woods, Good, HSG D
	59,179	80	Weighted Average
	56,778		95.94% Pervious Area
	2,401		4.06% Impervious Area

Tc (min)	Length (feet)	Slope (ft/ft)	Velocity (ft/sec)	Capacity (cfs)	Description
2.7	23	0.1740	0.14		**Sheet Flow, Tc-1** Woods: Light underbrush n= 0.400 P2= 3.30"
1.0	70	0.0574	1.20		**Shallow Concentrated Flow, Tc-2** Woodland Kv= 5.0 fps
0.5	170	0.1059	5.24		**Shallow Concentrated Flow, Tc-3** Unpaved Kv= 16.1 fps
2.5	140	0.0357	0.94		**Shallow Concentrated Flow, Tc-4** Woodland Kv= 5.0 fps
0.3	42	0.0714	2.67		**Shallow Concentrated Flow, Tc-5** Nearly Bare & Untilled Kv= 10.0 fps
7.0	445	Total			

Subcatchment 5S: Post Subcatchment 5

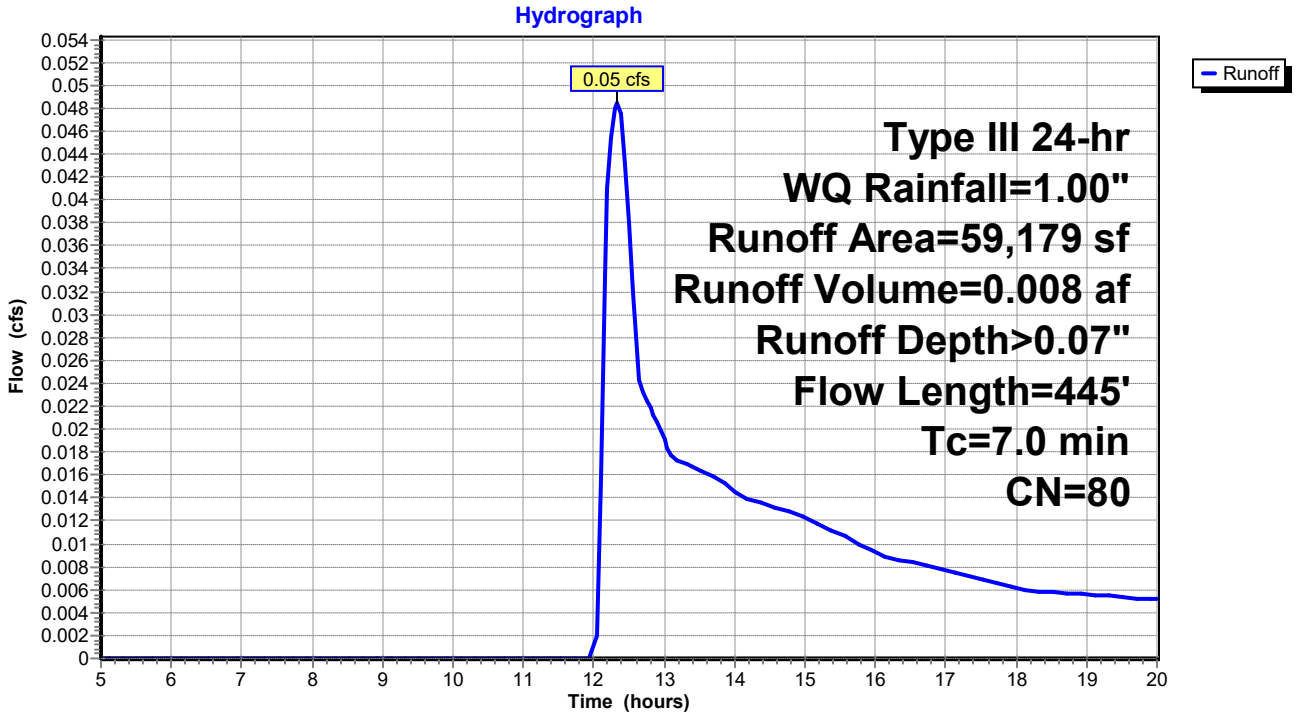

Summary for Reach 1R: Reach 1

Inflow Area = 0.226 ac, 50.01% Impervious, Inflow Depth > 0.14" for WQ event
Inflow = 0.02 cfs @ 12.36 hrs, Volume= 0.003 af
Outflow = 0.02 cfs @ 12.36 hrs, Volume= 0.003 af, Atten= 0%, Lag= 0.0 min
Routed to Link DP1 : DP1

Routing by Stor-Ind method, Time Span= 5.00-20.00 hrs, dt= 0.05 hrs

Reach 1R: Reach 1

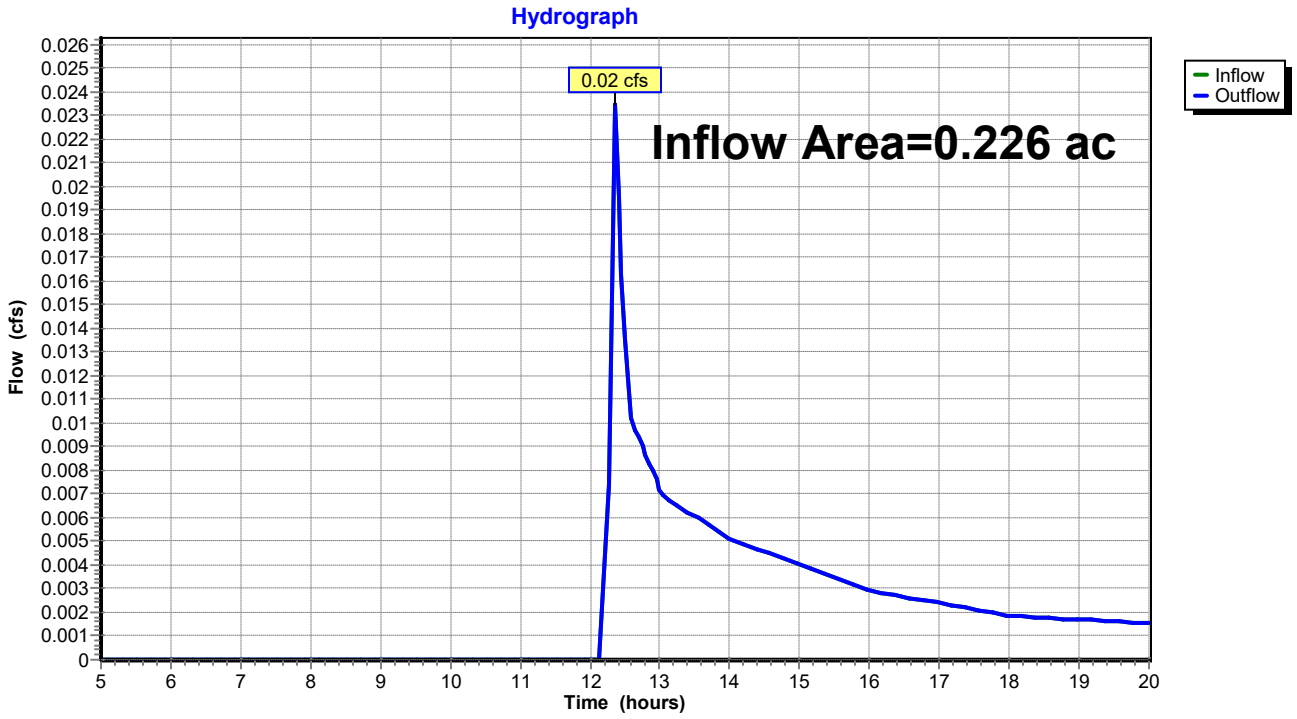

Summary for Reach 2R: Reach 2

Inflow Area = 0.307 ac, 33.49% Impervious, Inflow Depth = 0.00" for WQ event
Inflow = 0.00 cfs @ 5.00 hrs, Volume= 0.000 af
Outflow = 0.00 cfs @ 5.00 hrs, Volume= 0.000 af, Atten= 0%, Lag= 0.0 min
Routed to Link DP2 : DP2

Routing by Stor-Ind method, Time Span= 5.00-20.00 hrs, dt= 0.05 hrs

Reach 2R: Reach 2

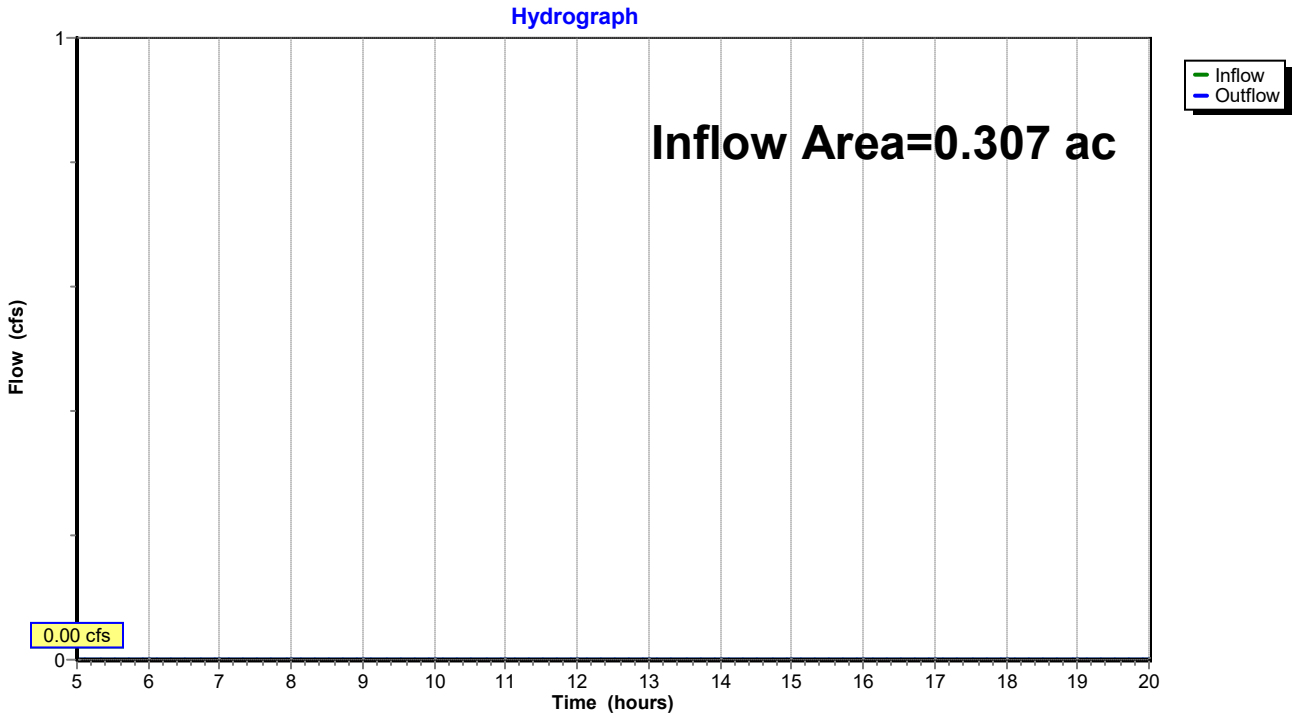

Summary for Reach DP3: Shoreline 3

Inflow Area = 1.359 ac, 4.06% Impervious, Inflow Depth > 0.07" for WQ event
Inflow = 0.05 cfs @ 12.34 hrs, Volume= 0.008 af
Outflow = 0.05 cfs @ 12.34 hrs, Volume= 0.008 af, Atten= 0%, Lag= 0.0 min
Routed to Reach SP1 : SACO RIVER / OCEAN

Routing by Stor-Ind method, Time Span= 5.00-20.00 hrs, dt= 0.05 hrs

Reach DP3: Shoreline 3

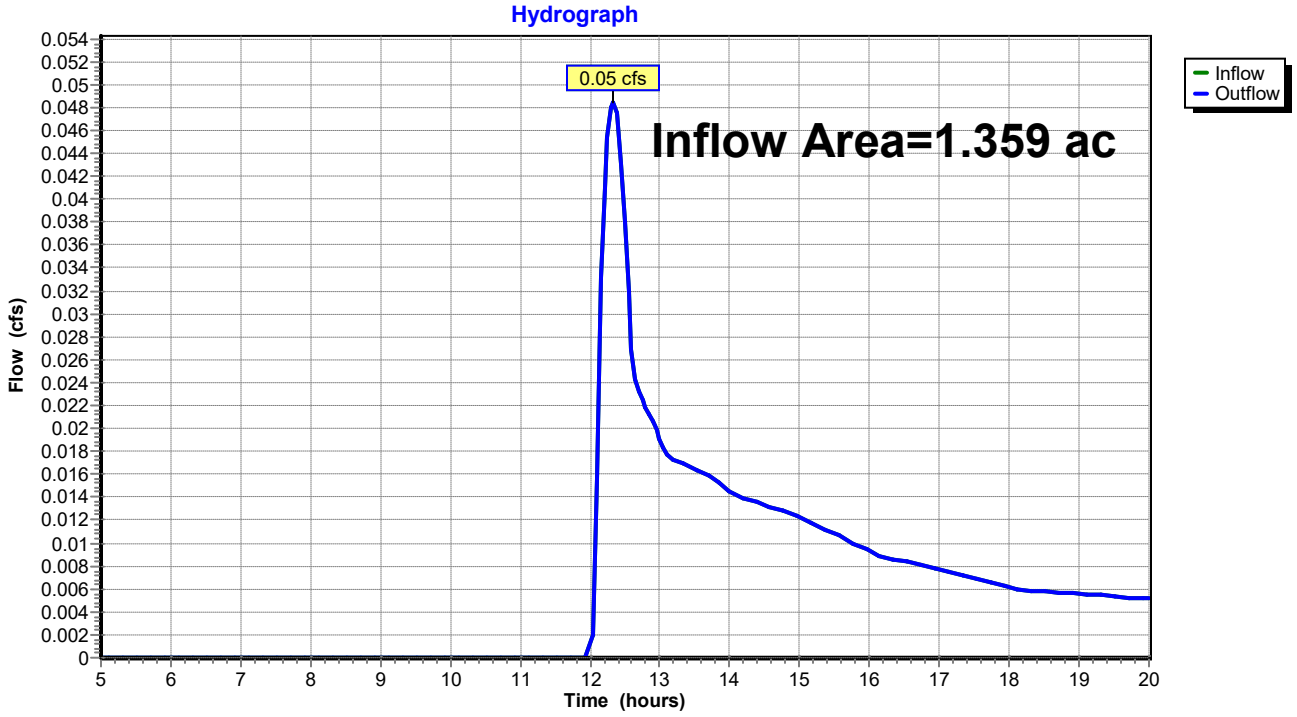

Summary for Reach SP1: SACO RIVER / OCEAN

Inflow Area = 2.557 ac, 11.96% Impervious, Inflow Depth > 0.06" for WQ event
Inflow = 0.09 cfs @ 12.36 hrs, Volume= 0.014 af
Outflow = 0.09 cfs @ 12.36 hrs, Volume= 0.014 af, Atten= 0%, Lag= 0.0 min

Routing by Stor-Ind method, Time Span= 5.00-20.00 hrs, dt= 0.05 hrs

Reach SP1: SACO RIVER / OCEAN

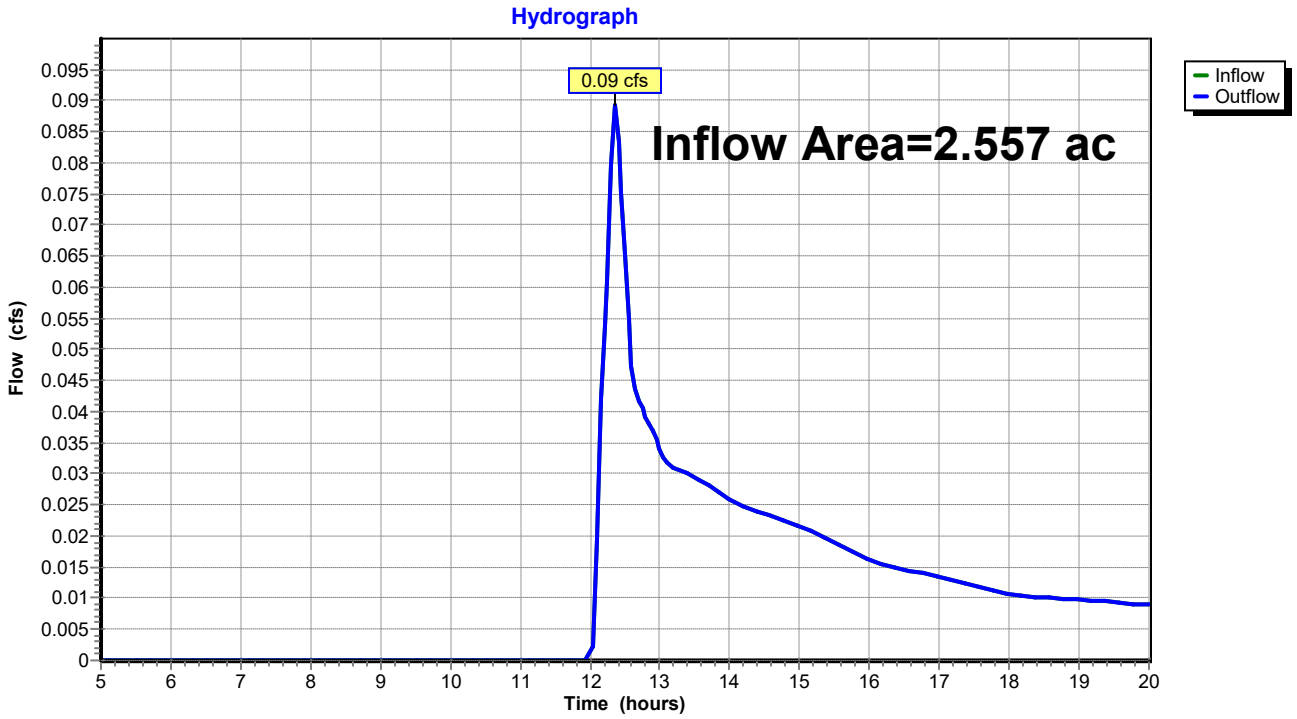

Summary for Pond 1P: Bioretention Filter Cell 1

Inflow Area = 0.226 ac, 50.01% Impervious, Inflow Depth > 0.20" for WQ event
Inflow = 0.06 cfs @ 12.03 hrs, Volume= 0.004 af
Outflow = 0.02 cfs @ 12.36 hrs, Volume= 0.003 af, Atten= 58%, Lag= 19.8 min
Primary = 0.02 cfs @ 12.36 hrs, Volume= 0.003 af
Routed to Pond 2P : CB-1

Routing by Stor-Ind method, Time Span= 5.00-20.00 hrs, dt= 0.05 hrs
Peak Elev= 18.01' @ 12.36 hrs Surf.Area= 217 sf Storage= 56 cf

Plug-Flow detention time= 130.6 min calculated for 0.003 af (67% of inflow)
Center-of-Mass det. time= 53.4 min (884.3 - 831.0)

Volume	Invert	Avail.Storage	Storage Description
#1	17.50'	200 cf	**Custom Stage Data (Prismatic)** Listed below (Recalc)

Elevation (feet)	Surf.Area (sq-ft)	Inc.Store (cubic-feet)	Cum.Store (cubic-feet)
17.50	0	0	0
18.00	213	53	53
18.50	372	146	200

Device	Routing	Invert	Outlet Devices
#1	Primary	18.00'	**18.0" Horiz. Orifice/Grate** C= 0.600 in 24.0" Grate (56% open area) Limited to weir flow at low heads

Primary OutFlow Max=0.02 cfs @ 12.36 hrs HW=18.01' (Free Discharge)
↑—**1=Orifice/Grate** (Weir Controls 0.02 cfs @ 0.37 fps)

Pond 1P: Bioretention Filter Cell 1

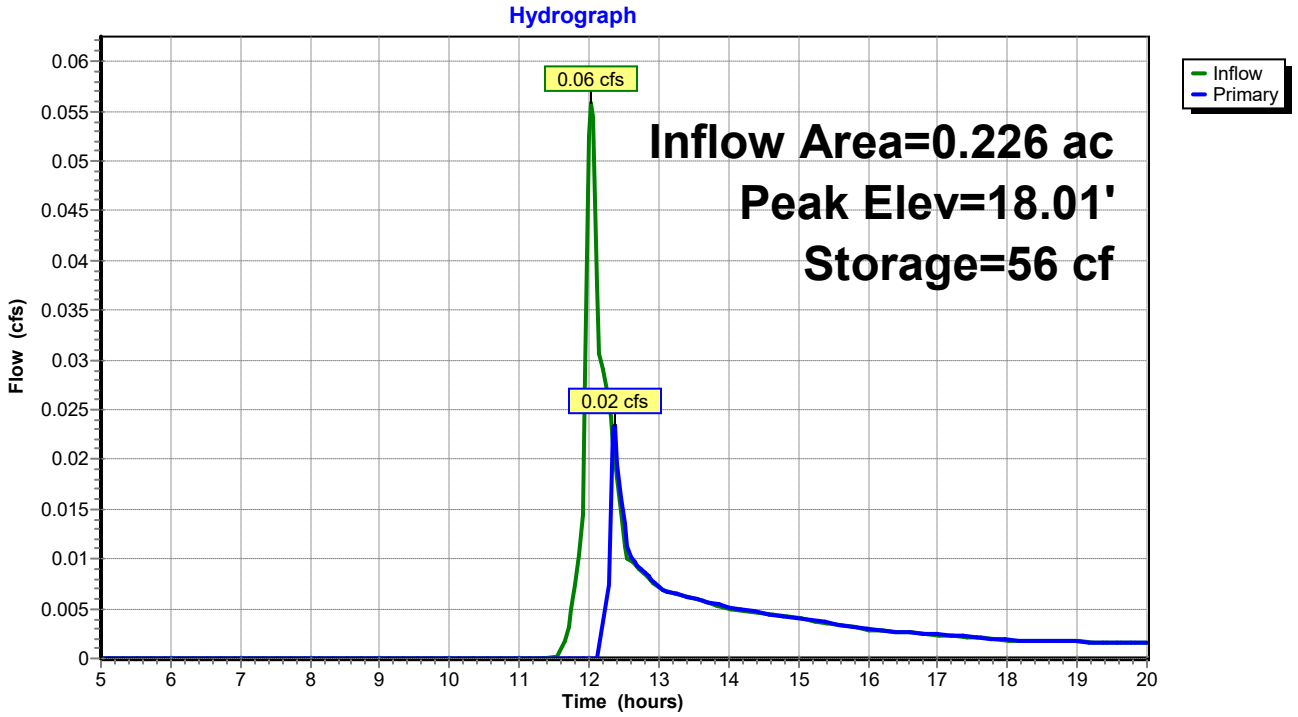

Summary for Pond 2P: CB-1

Inflow Area = 0.226 ac, 50.01% Impervious, Inflow Depth > 0.14" for WQ event
Inflow = 0.02 cfs @ 12.36 hrs, Volume= 0.003 af
Outflow = 0.02 cfs @ 12.36 hrs, Volume= 0.003 af, Atten= 0%, Lag= 0.0 min
Primary = 0.02 cfs @ 12.36 hrs, Volume= 0.003 af
Routed to Reach 1R : Reach 1

Routing by Stor-Ind method, Time Span= 5.00-20.00 hrs, dt= 0.05 hrs
Peak Elev= 13.83' @ 12.36 hrs

Device	Routing	Invert	Outlet Devices
#1	Primary	13.75'	**15.0" Round Culvert** L= 48.0' CPP, projecting, no headwall, Ke= 0.900 Inlet / Outlet Invert= 13.75' / 12.00' S= 0.0365 '/' Cc= 0.900 n= 0.013 Corrugated PE, smooth interior, Flow Area= 1.23 sf

Primary OutFlow Max=0.02 cfs @ 12.36 hrs HW=13.83' (Free Discharge)
1=Culvert (Inlet Controls 0.02 cfs @ 0.74 fps)

Pond 2P: CB-1

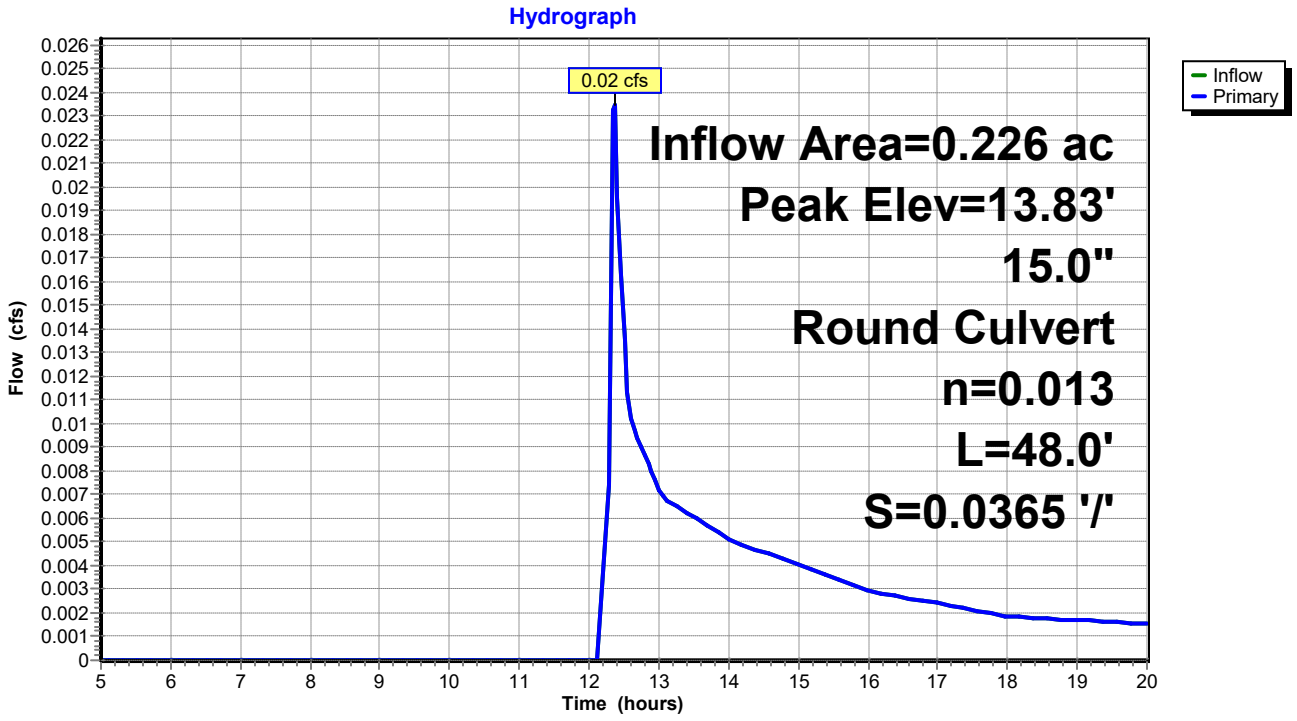

Summary for Pond 3P: Bioretention Filter Cell 2

Inflow Area = 0.307 ac, 33.49% Impervious, Inflow Depth > 0.13" for WQ event
Inflow = 0.04 cfs @ 12.11 hrs, Volume= 0.003 af
Outflow = 0.02 cfs @ 12.48 hrs, Volume= 0.002 af, Atten= 56%, Lag= 22.5 min
Primary = 0.02 cfs @ 12.48 hrs, Volume= 0.002 af
Routed to Pond 4P : CB-2

Routing by Stor-Ind method, Time Span= 5.00-20.00 hrs, dt= 0.05 hrs
Peak Elev= 23.51' @ 12.48 hrs Surf.Area= 171 sf Storage= 44 cf

Plug-Flow detention time= 120.8 min calculated for 0.002 af (72% of inflow)
Center-of-Mass det. time= 48.7 min (900.5 - 851.8)

Volume	Invert	Avail.Storage	Storage Description
#1	23.00'	380 cf	**Custom Stage Data (Prismatic)** Listed below (Recalc)

Elevation (feet)	Surf.Area (sq-ft)	Inc.Store (cubic-feet)	Cum.Store (cubic-feet)
23.00	0	0	0
24.00	335	168	168
24.50	515	213	380

Device	Routing	Invert	Outlet Devices
#1	Primary	23.50'	**18.0" Horiz. Orifice/Grate** C= 0.600 in 24.0" Grate (56% open area) Limited to weir flow at low heads

Primary OutFlow Max=0.02 cfs @ 12.48 hrs HW=23.51' (Free Discharge)
↑**1=Orifice/Grate** (Weir Controls 0.02 cfs @ 0.33 fps)

Pond 3P: Bioretention Filter Cell 2

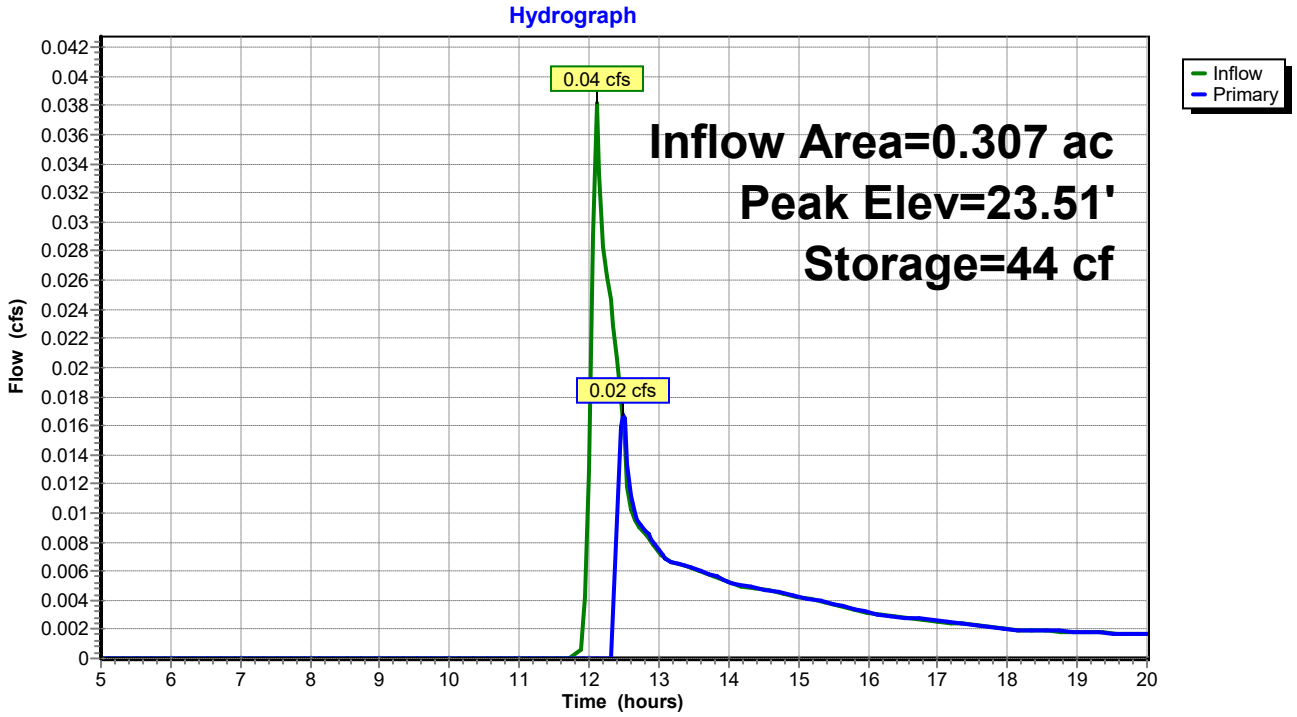

Summary for Pond 4P: CB-2

Inflow Area = 0.307 ac, 33.49% Impervious, Inflow Depth > 0.10" for WQ event
Inflow = 0.02 cfs @ 12.48 hrs, Volume= 0.002 af
Outflow = 0.02 cfs @ 12.48 hrs, Volume= 0.002 af, Atten= 0%, Lag= 0.0 min
Primary = 0.02 cfs @ 12.48 hrs, Volume= 0.002 af
Routed to Pond 5P : Level Lip Speader

Routing by Stor-Ind method, Time Span= 5.00-20.00 hrs, dt= 0.05 hrs
Peak Elev= 18.81' @ 12.48 hrs

Device	Routing	Invert	Outlet Devices
#1	Primary	18.75'	**18.0" Round Culvert** L= 40.0' CPP, projecting, no headwall, Ke= 0.900 Inlet / Outlet Invert= 18.75' / 18.00' S= 0.0187 '/' Cc= 0.900 n= 0.013 Corrugated PE, smooth interior, Flow Area= 1.77 sf

Primary OutFlow Max=0.02 cfs @ 12.48 hrs HW=18.81' (Free Discharge)
1=Culvert (Inlet Controls 0.02 cfs @ 0.66 fps)

Pond 4P: CB-2

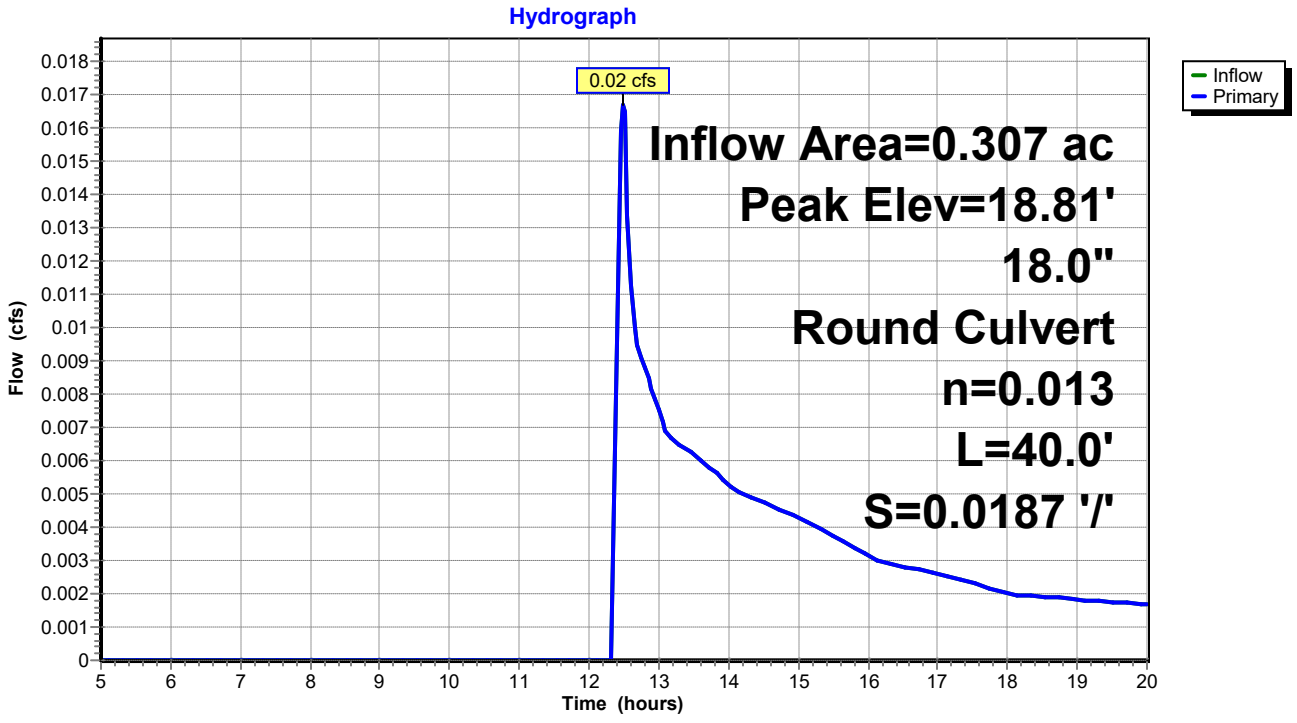

Summary for Pond 5P: Level Lip Speader

Inflow Area = 0.307 ac, 33.49% Impervious, Inflow Depth > 0.10" for WQ event
Inflow = 0.02 cfs @ 12.48 hrs, Volume= 0.002 af
Outflow = 0.00 cfs @ 5.00 hrs, Volume= 0.000 af, Atten= 100%, Lag= 0.0 min
Primary = 0.00 cfs @ 5.00 hrs, Volume= 0.000 af
Routed to Reach 2R : Reach 2

Routing by Stor-Ind method, Time Span= 5.00-20.00 hrs, dt= 0.05 hrs
Peak Elev= 17.95' @ 20.00 hrs Surf.Area= 163 sf Storage= 106 cf
Flood Elev= 20.00' Surf.Area= 168 sf Storage= 115 cf

Plug-Flow detention time= (not calculated: initial storage exceeds outflow)
Center-of-Mass det. time= (not calculated: no outflow)

Volume	Invert	Avail.Storage	Storage Description
#1	17.00'	115 cf	**Custom Stage Data (Prismatic)** Listed below (Recalc)

Elevation (feet)	Surf.Area (sq-ft)	Voids (%)	Inc.Store (cubic-feet)	Cum.Store (cubic-feet)
17.00	61	0.0	0	0
18.00	168	100.0	115	115

Device	Routing	Invert	Outlet Devices
#0	Primary	18.00'	**Automatic Storage Overflow** (Discharged without head)

Primary OutFlow Max=0.00 cfs @ 5.00 hrs HW=17.00' (Free Discharge)

Pond 5P: Level Lip Speader

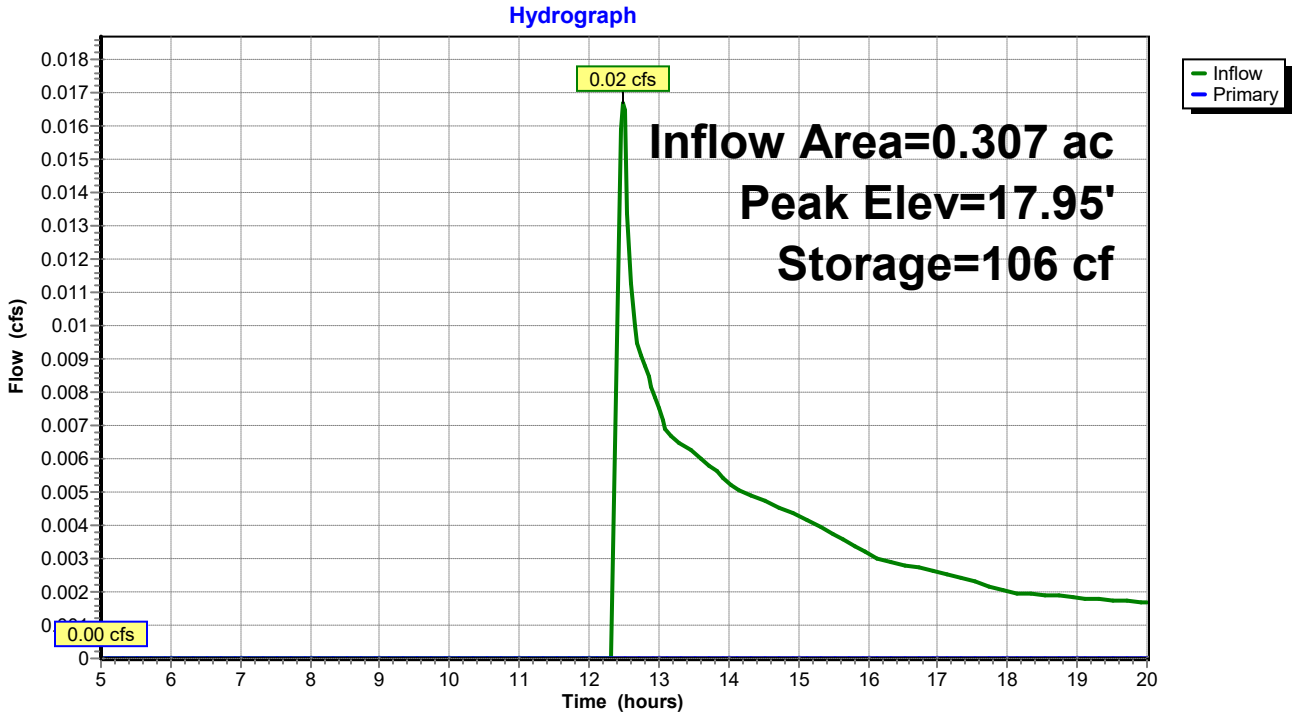

Summary for Link DP1: DP1

Inflow Area = 0.489 ac, 28.87% Impervious, Inflow Depth > 0.09" for WQ event
Inflow = 0.03 cfs @ 12.36 hrs, Volume= 0.004 af
Primary = 0.03 cfs @ 12.36 hrs, Volume= 0.004 af, Atten= 0%, Lag= 0.0 min
Routed to Reach SP1 : SACO RIVER / OCEAN

Primary outflow = Inflow, Time Span= 5.00-20.00 hrs, dt= 0.05 hrs

Link DP1: DP1

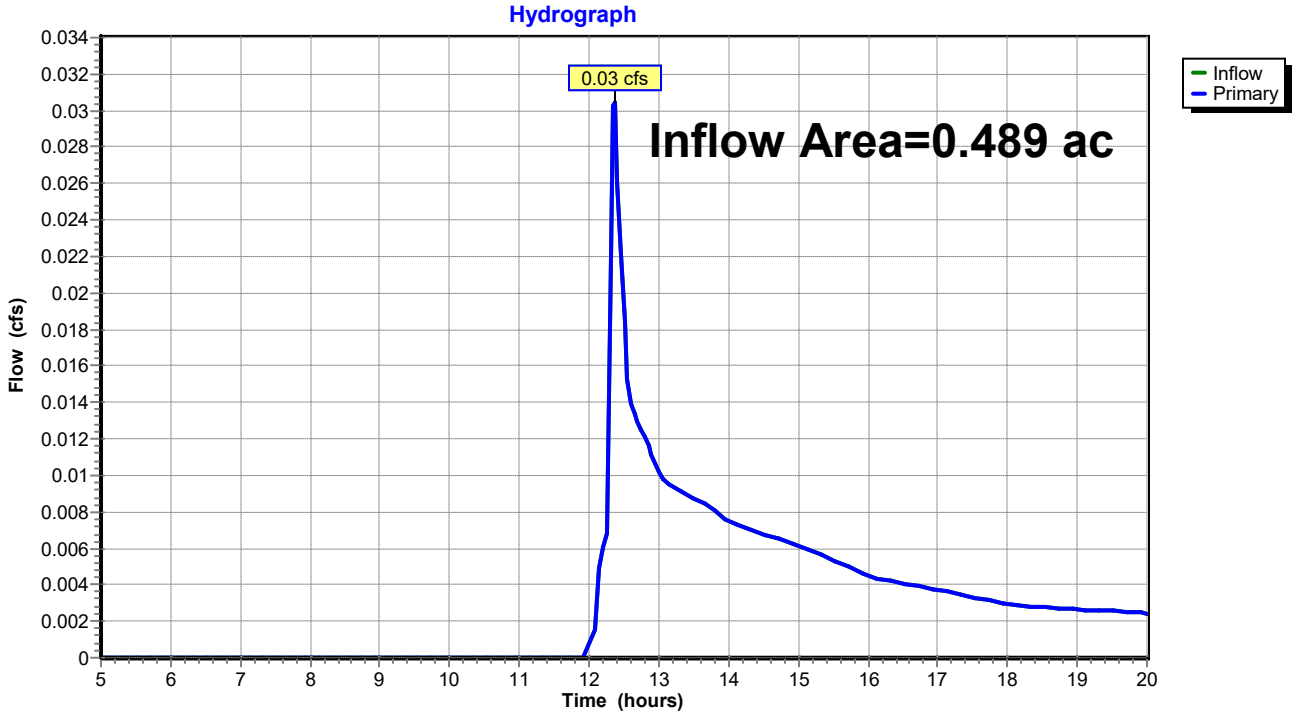

Summary for Link DP2: DP2

Inflow Area = 0.709 ac, 15.44% Impervious, Inflow Depth > 0.03" for WQ event
Inflow = 0.01 cfs @ 12.38 hrs, Volume= 0.002 af
Primary = 0.01 cfs @ 12.38 hrs, Volume= 0.002 af, Atten= 0%, Lag= 0.0 min
Routed to Reach SP1 : SACO RIVER / OCEAN

Primary outflow = Inflow, Time Span= 5.00-20.00 hrs, dt= 0.05 hrs

Link DP2: DP2

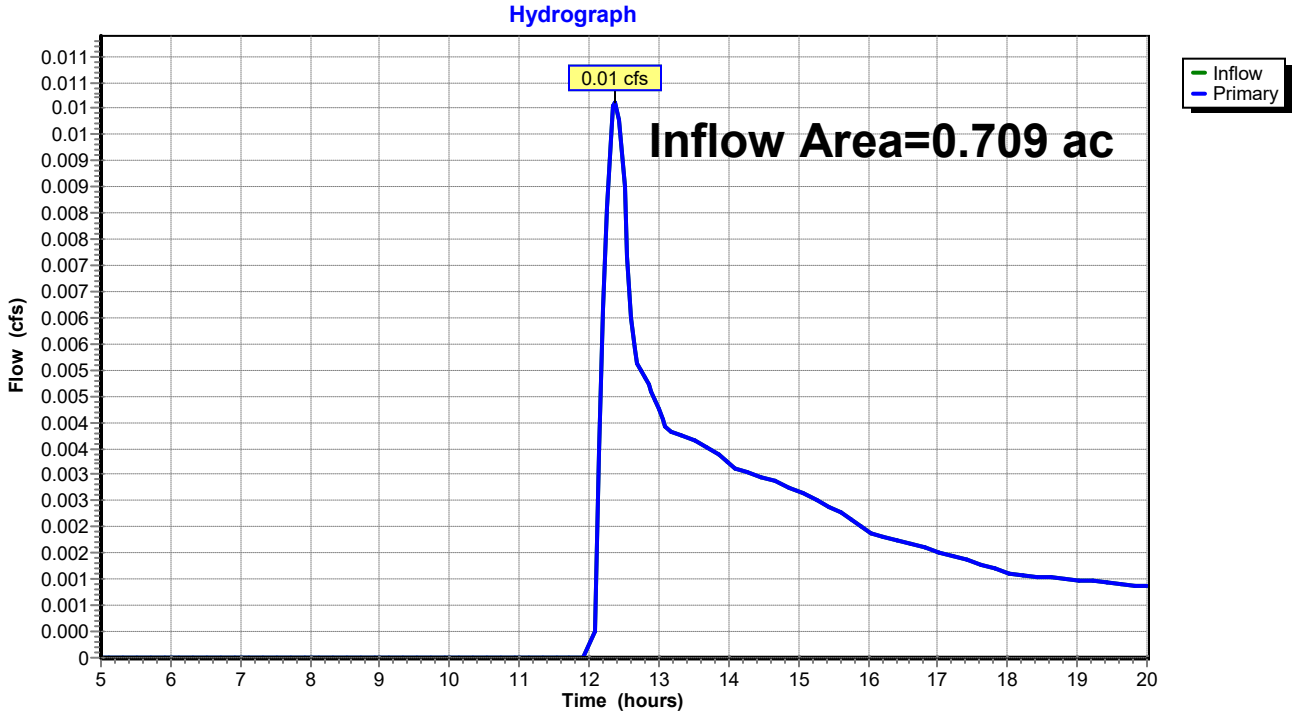

TABLE OF CONTENTS

Project Reports
1 Routing Diagram
2 Project Notes
3 Rainfall Events Listing
4 Area Listing (all nodes)
5 Soil Listing (all nodes)
6 Ground Covers (all nodes)
7 Pipe Listing (all nodes)

2-yr Event
8 Node Listing
10 Subcat 1S: Post Subcatchment 1
12 Subcat 2S: Post Subcatchment 2
13 Subcat 3S: Post Subcatchment 3
15 Subcat 4S: Post Subcatchment 4
16 Subcat 5S: Post Subcatchment 5
18 Reach 1R: Reach 1
19 Reach 2R: Reach 2
20 Reach DP3: Shoreline 3
21 Reach SP1: SACO RIVER / OCEAN
22 Pond 1P: Bioretention Filter Cell 1
24 Pond 2P: CB-1
25 Pond 3P: Bioretention Filter Cell 2
27 Pond 4P: CB-2
28 Pond 5P: Level Lip Speader
30 Link DP1: DP1
31 Link DP2: DP2

10-yr Event
32 Node Listing
34 Subcat 1S: Post Subcatchment 1
36 Subcat 2S: Post Subcatchment 2
37 Subcat 3S: Post Subcatchment 3
39 Subcat 4S: Post Subcatchment 4
40 Subcat 5S: Post Subcatchment 5
42 Reach 1R: Reach 1
43 Reach 2R: Reach 2
44 Reach DP3: Shoreline 3
45 Reach SP1: SACO RIVER / OCEAN
46 Pond 1P: Bioretention Filter Cell 1
48 Pond 2P: CB-1
49 Pond 3P: Bioretention Filter Cell 2
51 Pond 4P: CB-2
52 Pond 5P: Level Lip Speader
54 Link DP1: DP1
55 Link DP2: DP2

25-yr Event

56 Node Listing
58 Subcat 1S: Post Subcatchment 1
60 Subcat 2S: Post Subcatchment 2
61 Subcat 3S: Post Subcatchment 3
63 Subcat 4S: Post Subcatchment 4
64 Subcat 5S: Post Subcatchment 5
66 Reach 1R: Reach 1
67 Reach 2R: Reach 2
68 Reach DP3: Shoreline 3
69 Reach SP1: SACO RIVER / OCEAN
70 Pond 1P: Bioretention Filter Cell 1
72 Pond 2P: CB-1
73 Pond 3P: Bioretention Filter Cell 2
75 Pond 4P: CB-2
76 Pond 5P: Level Lip Speader
78 Link DP1: DP1
79 Link DP2: DP2

100-yr Event

80 Node Listing
82 Subcat 1S: Post Subcatchment 1
84 Subcat 2S: Post Subcatchment 2
85 Subcat 3S: Post Subcatchment 3
87 Subcat 4S: Post Subcatchment 4
88 Subcat 5S: Post Subcatchment 5
90 Reach 1R: Reach 1
91 Reach 2R: Reach 2
92 Reach DP3: Shoreline 3
93 Reach SP1: SACO RIVER / OCEAN
94 Pond 1P: Bioretention Filter Cell 1
96 Pond 2P: CB-1
97 Pond 3P: Bioretention Filter Cell 2
99 Pond 4P: CB-2
100 Pond 5P: Level Lip Speader
102 Link DP1: DP1
103 Link DP2: DP2

WQ Event

104 Node Listing
106 Subcat 1S: Post Subcatchment 1
108 Subcat 2S: Post Subcatchment 2
109 Subcat 3S: Post Subcatchment 3
111 Subcat 4S: Post Subcatchment 4
112 Subcat 5S: Post Subcatchment 5
114 Reach 1R: Reach 1
115 Reach 2R: Reach 2
116 Reach DP3: Shoreline 3

117 Reach SP1: SACO RIVER / OCEAN
118 Pond 1P: Bioretention Filter Cell 1
120 Pond 2P: CB-1
121 Pond 3P: Bioretention Filter Cell 2
123 Pond 4P: CB-2
124 Pond 5P: Level Lip Speader
126 Link DP1: DP1
127 Link DP2: DP2

Pipe Schedule
UNE Marine Sciene Center Pier
Biddeford, Maine

PROPOSED PIPES (BIORETENTION FILTER CELLS)

From	Inv	To	Inv	AREAS Paved 0.98	AREAS Open 'C' 0.61	AREAS Total (sf)	C	A (ac)	CA (ac)	ΣCA (ac)	Tc (min)	i25 (in/hr)	Q25 (req) (CFS)	Type	Pipe n	Leng (ft)	Dia (in)	Slope (%)	Vel ¼ Full (ft/sec)	Vel (ft/sec)	Q (prov) (CFS)	Q (Prov) > Q (Req'd)
SF-A	18.75	**18" Outfall**	18.00	3,935	5,897	9,832	FLOW FROM HYDROLOGY MODEL						1.33	HDPE	0.012	40	18	1.88%	6.18	8.82	15.58	good
SF-B	13.75	**15" Outfall**	12.00	3,768	9,597	13,365	FLOW FROM HYDROLOGY MODEL						1.56	HDPE	0.012	48	15	3.65%	7.63	10.89	13.36	good

Appendix D

Inspection and Maintenance Plan

Owner Responsible for Maintenance

All maintenance plans for stormwater management measures must include the following:

> The name, address, and telephone number of the person or persons responsible for the preventative and corrective maintenance of the stormwater management measure. If the plan identifies a party other than the owner or developer as having responsibility for maintenance, i.e., a public entity or homeowners' association, the plan must include a copy of the other party's written agreement to assume this responsibility. This agreement must include a copy of any ordinance or regulation that requires the owner or developer to dedicate the stormwater management measure and/or its maintenance to the other party.

Information of the Person Responsible for Maintenance:

Name:

Address:

Telephone:

If an entity other than the above listed property owner or the developer will have the responsibility for stormwater pond maintenance, then they will provide a copy of the designated party's written agreement to assume this responsibility.

University of New England
Biddeford, Maine
June 2025

INSPECTION AND MAINTENANCE PLAN OF STORMWATER MANAGEMENT FACILITIES

Stormwater Management Facilities include swales, paved surfaces, manholes and catch basins, drain pipe, riprapped aprons, level spreaders, wooded buffers, and bioretention filter cells. Periodic inspection and maintenance of these site features and devices is necessary to prevent erosion, protect roadways and other paved areas, and remove pollutants from stormwater runoff. Best management practices and stormwater facilities should be inspected as noted below, and after a rainfall event of 1" or more in 24 hours.

University of New England Facilities Department is responsible for the inspections and maintenance of stormwater facilities associated with this project.

SWALES, DITCHES, CURBS AND PAVED AREAS:

Swales, ditches, curbs and paved areas are easily inspected during a site walk or even a ride-by. Since visual inspection is easy, their condition should be assessed during and/or after significant rainfall events such as thunder showers and periods of heavy or extended rainfall and during periods of significant snowmelt. Any damage or unusual condition such as sedimentation of a ditch, erosion, damaged curb or dying vegetation should be recorded, dated and initialed by the inspector when observed. Even if there is no damage, the inspector should make record of these inspections at least twice annually.

Paved areas should be visually inspected monthly during the winter. The inspector should pay particular attention to the build up of sand around catch basin grates and remove accumulations that block the free flow of surface runoff to the catch basins. The date and initials of the inspector should be recorded on the forms provided as well as a notation of any cleanup effort that was made and the approximate volume of sand that was removed.

Open swales and ditches shall be inspected twice per year (in spring and fall) to assure that debris and/or sediments do not reduce the effectiveness of the system. Debris and sediments shall be removed at that time. Any sign of erosion or blockage shall be immediately repaired to assure a vigorous growth of vegetation for the stability of the ditches and slopes proper function. Maintenance shall include, but not be limited to, mowing, trimming and removal of vegetation in the ditches and slopes as required in order to prevent vegetation from blocking or diverting storm flows, replacement of riprap channel lining to prevent scour of the channel invert, removing vegetation and debris from the culverts.

Vegetated ditches should be mowed at least monthly during the growing season. Larger brush or trees must not be allowed to become established in the channel. Any areas where the vegetation fails will be subject to erosion and should be reseeded and mulched immediately.

CATCH BASINS, FIELD INLETS AND DRAIN MANHOLES:

Catch Basins and field inlets are precast concrete structures with sumps and cast iron grates used to collect stormwater and trap heavy sediments. Drain Manholes are similar structures constructed with a channel instead of a sump and a solid cast iron cover instead of a grate. Drain Manholes exist at changes in direction and/or size of storm drain pipe. Catch Basins, field inlets and drain manholes provide access to the closed storm drain system for inspection and maintenance.

Throughout the winter / spring sanding period, inspect catch basins and field inlets monthly and after every significant rainfall event or period of heavy snowmelt. Clean catch basin and field inlet sumps when sediment level is within 12 inches of the outlet pipe invert. At a minimum, remove floating debris and hydrocarbons at the time of the inspection. The removed material must be disposed of in accordance with the Maine Solid Waste Disposal Rules. Confined space entry safety procedures shall be practiced should entry into these structures be required.

Record dates of inspections, observations and maintenance measures implemented (if any) on the forms provided and initial the entry.

DRAIN PIPES:

Drain pipes are road culverts and pipes connecting drain manholes. Inspect drain pipes when inspecting other stormwater maintenance facilities. At least annually make a visual inspection of the pipe. During the daylight you should be able to see light through most pipes as they have been laid to a straight line and grade. In some cases (e.g. pipe runs to a drain manhole, or is blocked) you will need a light to inspect pipes.

Remove any obstructions to flow; remove accumulated sediments and debris at the inlet, at the outlet, and within the conduit; and to repair any erosion damage at the pipe inlet and outlet. Sediment should be removed when its level exceeds 20% of the pipe diameter. This may be accomplished by hydraulic flushing or any mechanical means; however, care should be taken to contain the sediment at the pipe outlet, and not flush the sediments into the stormwater filter or wetland areas.

Riprap aprons where stone is displaced should be replaced and chinked to assure stability. With time, additional riprap may be added. Vegetation growing through riprap should be removed on an annual basis.

Record inspections on the forms provided noting condition of pipe and any maintenance procedures implemented.

LEVEL SPREADERS:

Level Spreaders are shallow basins or ditches constructed at the ends of ditches or pipe outlets to disperse or "spread" concentrated flow thinly over a receiving area. Level Spreaders are constructed along the natural contour of the land to create a level "lip" on the outlet side. The integrity of the level lip is critical to the proper performance of this device.

Inspect the Level Spreader at least once each season and following significant rainfall events (1 inch or more of rain in 12 hours). Record inspections on the forms provided noting your observations and any corrective action taken. Any sign of erosion or blockage shall be immediately repaired to assure a vigorous growth of vegetation and stability of stone berms for the stability of the level spreader for proper function. Minor regrading, releveling of the stone “lip,” and reseeding

of the level lip on an annual basis should be anticipated. Mow level lips at least twice during the growing season. Maintenance may also include removal of sediment buildup especially on the inlet end.

BIORETENTION FILTER CELLS:

A bioretention filter cells is a landscaped depression with an under drained soil bed or soil filter that exfiltrates the stormwater. The depression is designed to temporarily store runoff, which will drain through the soil filter into the underdrains; excess runoff will flow into structures or over earthen spillways.

Soil Filter Inspection: The soil filter should be inspected after every major storm in the first few months to ensure proper function. Thereafter, the filter should be inspected at least once every six months to ensure that it is draining within 48 hours; and that, after storms that fill the system to overflow, it drains in no less than 24 hours. If the filter drains too rapidly, (i.e. prior to 24 hours), then an adjustable orifice shall be installed on the underdrain outlet pipe. The orifice shall be adjusted such that the filter completely drains within 24 to 72 hours.

Underdrain System: The soil filter outlet consists of a layer of planting loam and sand with a stone and perforated pipe underdrain. Outlet inspections shall include flushing of the underdrain through the cleanouts at the end of the pipes. Trash, sediment, and debris shall be removed from the vicinity of the outlet and must be disposed of in accordance with the Maine Solid Waste Disposal Rules.

Soil Filter Replacement: If the filter fails to drain within 72 hours, the surface of the pond shall be rototilled to promote aeration of the filter media and vegetation shall be re-established. If aeration of the surface soil fails to promote filtration of impounded water within 72 hours, then the filter media shall be replaced as necessary. The stone underdrain shall also be replaced at this time, along with the perforated pipe.

Sediment Removal: Sediment and plant debris should be removed from the pretreatment structure at least annually.

Mowing: Filters with grass cover should be mowed no more than 2 times per growing season to maintain grass heights less than 12 inches.

Fertilization: Fertilization of the bioretention filter cells should be avoided unless absolutely necessary to establish vegetation.

Harvesting and Weeding: Harvesting and pruning of excessive growth will need to be done occasionally. Weeding to control unwanted or invasive plants may also be necessary. Add new mulch as necessary for bioretention cells.

Bioretention Filter Cells shall not be used for snow storage area. Vehicular equipment used to maintain or rehabilitate Bioretention Filter Cells should work from the basin perimeter and not enter the basin area, as this will compact the soil surface and reduce the design infiltration rate. Record all maintenance on forms provided.

SEDIMENT DISPOSAL:

Any sediment or debris removed during maintenance of the stormwater system must be disposed of in accordance with the Maine Solid Waste Disposal Rules.

UNIVERSITY OF NEW ENGLAND
BIDDEFORD, MAINE

INSPECTION / MAINTENANCE LOG

SWALES, DITCHES, CURBS AND PAVED SURFACES

I: INSPECTED - C: CLEANED - S: SWEPT - R: REPAIRED

DATE	INITIALS	ACTION	COMMENT
5/10/19	RST	I, C	EXAMPLE: Removed sand around CB's 19 and 20. Heavy rain over the weekend.

UNIVERSITY OF NEW ENGLAND
BIDDEFORD, MAINE

INSPECTION / MAINTENANCE LOG

CATCH BASINS, FIELD INLETS, AND DRAIN MANHOLES

I: INSPECTED - C: CLEANED - R: REPAIRED

DATE	INITIALS	ACTION	COMMENT
6/13/19	JKL	I, C	EXAMPLE: Called ACME to clean catch basins.

UNIVERSITY OF NEW ENGLAND

BIDDEFORD, MAINE

INSPECTION / MAINTENANCE LOG

DRAIN PIPES

I: INSPECTED - C: CLEANED - R: REPAIRED

DATE	INITIALS	ACTION	COMMENT
4/19/18	JKL	I, C	EXAMPLE: Called ACME to clean debris from culvert inlets along Main Road and Loop Road.

UNIVERSITY OF NEW ENGLAND

BIDDEFORD, MAINE

INSPECTION / MAINTENANCE LOG

LEVEL SPREADERS

I: INSPECTED - C: CLEANED - R: REPAIRED

DATE	INITIALS	ACTION	COMMENT
8/16/19	JKL	I, C	EXAMPLE: Inspected level spreaders on site, found minimal sediment build up, stone lips appeared consistently level and functional. Mowed level lips.

UNIVERSITY OF NEW ENGLAND

BIDDEFORD, MAINE

INSPECTION / MAINTENANCE LOG

BIORETENTION FILTER CELLS

I: INSPECTED - C: CLEANED - R: REPAIRED

DATE	INITIALS	Unit #	ACTION	COMMENT
7/6/19	PQR	LA2	I, C	EXAMPLE: Cleared sediment and plant debris from inlet area, mowed filter area, crest, and sideslopes.

STORMWATER MANAGEMENT SYSTEM
MAINTENANCE PROGRAM
SUMMARY CHECKLIST

Item	Commentary	Frequency			
		Month	Semi-Annual	Annual	Long-Term
All Pond and Filter side slopes	Inspect slopes for sloughing, erosion or undesirable tree growth. Mow slopes to control vegetation, repair any structure flaws identified	**X Mow Summer**		**X**	
All Pond and Filter Sediment Removal	Remove sediment when it occupies 15% of volume.				**X 5 Years**
Open Swale, Ditches & Inlet Structures	Inspect for debris accumulation, erosion and excessive vegetation. Mow monthly, remove debris, repair and revegetate any area of erosion	**X Mow**		**X**	
Pavement	Review for damage and buildup of debris and sand.	**X**	**X Sweep**		
Level Spreaders	Review level lip for stability and grass growth, remove sediment and debris		**X**		
Catchbasin and Drain Manholes	Inspect grates to assure optimum water flows into the structures. Inspect sumps for blockage and sediment accumulation. Clean out sumps .	**X Inspect**		**X Sediment removal**	
Pipelines	Inspect for sediment build-up in pipe. Flush and remove as required.			**X**	
Bioretention Filter Cells	Mow twice per year. Inspect for erosion.		**X**		

Drawings

PRE DEVELOPMENT DRAINAGE AREA 1S
AREA = 0.457 ACRES
WEIGHTED CN = 77
TC = 4.0 MIN

PRE DEVELOPMENT DRAINAGE AREA 2S
AREA = 0.637 ACRES
WEIGHTED CN = 77
TC = 12.7 MIN

PRE DEVELOPMENT DRAINAGE AREA 3S
AREA = 1.461 ACRES
WEIGHTED CN = 80
TC = 7.0 MIN

W
WATER

DP1 **DP2** **DP3**

1S
20,023 SF

2S
27,744 SF

3S
63,622 SF

BA
BEACHES, SAND
(UNRANKED)

LyC
LYMAN-ROCK OUTCROP COMPLEX
(HYD D)

LyB
LYMAN-ROCK OUTCROP COMPLEX
(HYD D)

UH
URBAN LAND-HOOKSAN COMPLEX
(HYD D)

GIRARD MARINE SCIENCE CENTER

UPLAND DEVELOPMENT AND STORMWATER MANAGEMENT DOES NOT EFFECT THE DRAINAGE AREA FOR THIS PROJECT. THIS WORK WAS APPROVED UNDER PRIOR SLODA PERMITTING.

ADDITIONAL DRAINAGE AREA BOUNDARY BEYOND DETAILED SITE TOPOGRAPHIC DATA IS BASED ON THE LATEST 2.5 MINUTE SERIES USGS TOPOGRAPHIC MAPPING

25' HAT SETBACK
75' HAT SETBACK
250' SHORELAND ZONE
MLLW
MHHW = 4.7'
EDGE OF RIPRAP
TOP OF BANK
LEDGE
LEDGE & BOULDERS
BOULDERS
RIPRAP
GRAVEL
CONCRETE PAD
PAVED WALK
PAVED PATH
PATH
WETLAND
SAND DUNES AREA SEE NOTE 6
HISTORY SIGN
WOODEN RACK
WOOD LANDING
WOOD STAIRS
GATE
DOOR
SHED
HVAC
BUILDING THRESH =16.98
FAN
EXPOSED CONDUIT
TRANSFORMER ON CONCRETE
GENERATOR ON CONCRETE PAD
GENERATOR EXHAUST BUILDING
12"RCP INV.=33.20
CONC.
IRF
BFE
VAC
PUMP
HP-1
HP-2
HP-3
HP-4
LB-1
LB-3
LB-8
ADD-1
ADD-8
ADD-9
TC-1 (20 LF)
TC-1 (148 LF)
TC-1 (23 LF)
TC-2 (118 LF)
TC-2 (50 LF)
TC-2 (70 LF)
TC-3 (170 LF)
TC-4 (140 LF)
TC-5 (42 LF)
THRESH= 33.02
FFE=32.96
THRESH= 33.01
RIM=32.35
THRESH= 32.97
2nd STORY OVERHANG
FFE=32.92
THRESH= 33.00
GIBE STAMPED "CITY OF BIDDEFORD ZONE LINE"

FOR PERMIT

0 20 40
SCALE, FEET

Attention:
0 1"
If this scale bar does not measure 1" then drawing is not original scale.

Designed:	DJB
Drawn:	JAM
Checked:	BJB
Approved:	BMM
P.E. No:	13033
GEI Project	2203703

GEI Consultants
GEI CONSULTANTS, INC.
5 MILK STREET
PORTLAND, ME 04101
(207)797-8901

UNE
UNIVERSITY OF NEW ENGLAND
11 HILLS BEACH RD.
BIDDEFORD, MAINE

UNIVERSITY OF NEW ENGLAND MARINE SCIENCE CENTER PIER
11 HILLS BEACH ROAD
BIDDEFORD, YORK COUNTY, MAINE

NO	DATE	ISSUE/REVISION	APP
4	9/14/2023	DEP PERMIT SET	DJB
3	6/28/2023	75% DESIGN SUBMISSION	DJB
2	2/15/2023	30% DESIGN SUBMISSION	DJB
1	12/9/2022	15% DESIGN SUBMISSIONREV	DJB
0	11/11/2022	15% DESIGN SUBMISSION	DJB

SHEET NAME
PRE-DEVELOPMENT DRAINAGE PLAN

SHEET NO.
SW-01

D:\CASTELNUOVO, VINNIE : \\geiconsultants.com\Data\Data_Storage\Working\UNIVERSITY OF NEW ENGLAND\2203703 UNE Marine Science Center Pier\00_CAD\Design\Sheets\2203703-SW-SHEETS.dwg - 9/15/2023

POST DEVELOPMENT DRAINAGE AREA 2S
AREA=0.264 ACRES
WEIGHTED CN=79
TC=3.4 MIN

POST DEVELOPMENT DRAINAGE AREA 4S
AREA=0.402 ACRES
WEIGHTED CN=79
TC=7.2 MIN

POST DEVELOPMENT DRAINAGE AREA 1S
AREA=0.226 ACRES
WEIGHTED CN=87
TC=0.8 MIN

POST DEVELOPMENT DRAINAGE AREA 5S
AREA=1.359 ACRES
WEIGHTED CN=80
TC=7.0 MIN

POST DEVELOPMENT DRAINAGE AREA 3S
AREA=0.307 ACRES
WEIGHTED CN=84
TC=4.9 MIN

W
WATER

DP1
DP2
DP3

1S
1P
2S
3S
3P
4S
5S
5P
R1
R2

BA
BEACHES, SAND
(UNRANKED)

UH
URBAN LAND-HOOKSAN COMPLEX
(HYD D)

LyC
LYMAN-ROCK OUTCROP COMPLEX
(HYD D)

LyB
LYMAN-ROCK OUTCROP COMPLEX
(HYD D)

UPLAND DEVELOPMENT AND STORMWATER MANAGEMENT DOES NOT EFFECT THE DRAINAGE AREA FOR THIS PROJECT. THIS WORK WAS APPROVED UNDER PRIOR SLODA PERMITTING.

ADDITIONAL DRAINAGE AREA BOUNDARY BEYOND DETAILED SITE TOPOGRAPHIC DATA IS BASED ON THE LATEST 2.5 MINUTE SERIES USGS TOPOGRAPHIC MAPPING

FOR PERMIT

0 20 40
SCALE, FEET

Attention:
0 1"
If this scale bar does not measure 1" then drawing is not original scale.

Designed:	DJB
Drawn:	JAM
Checked:	BJB
Approved:	BMM
P.E. No:	13033
GEI Project	2203703

GEI Consultants
GEI CONSULTANTS, INC.
5 MILK STREET
PORTLAND, ME 04101
(207)797-8901

UNIVERSITY OF NEW ENGLAND
11 HILLS BEACH RD.
BIDDEFORD, MAINE

UNIVERSITY OF NEW ENGLAND
MARINE SCIENCE CENTER PIER
11 HILLS BEACH ROAD
BIDDEFORD, YORK COUNTY, MAINE

NO	DATE	ISSUE/REVISION	APP
4	9/14/2023	DEP PERMIT SET	DJB
3	6/28/2023	75% DESIGN SUBMISSION	DJB
2	2/15/2023	30% DESIGN SUBMISSION	DJB
1	12/9/2022	15% DESIGN SUBMISSIONREV	DJB
0	11/11/2022	15% DESIGN SUBMISSION	DJB

SHEET NAME
POST-DEVELOPMENT DRAINAGE PLAN

SHEET NO.
SW-02

DICASTELNUOVO, VINNIE \\geiconsultants.com\Data\Data_Storage\Working\UNIVERSITY OF NEW ENGLAND\2203703 UNE Marine Science Center Pier\00_CAD\Design\Sheets\2203703-SW-SHEETS.dwg - 9/15/2023

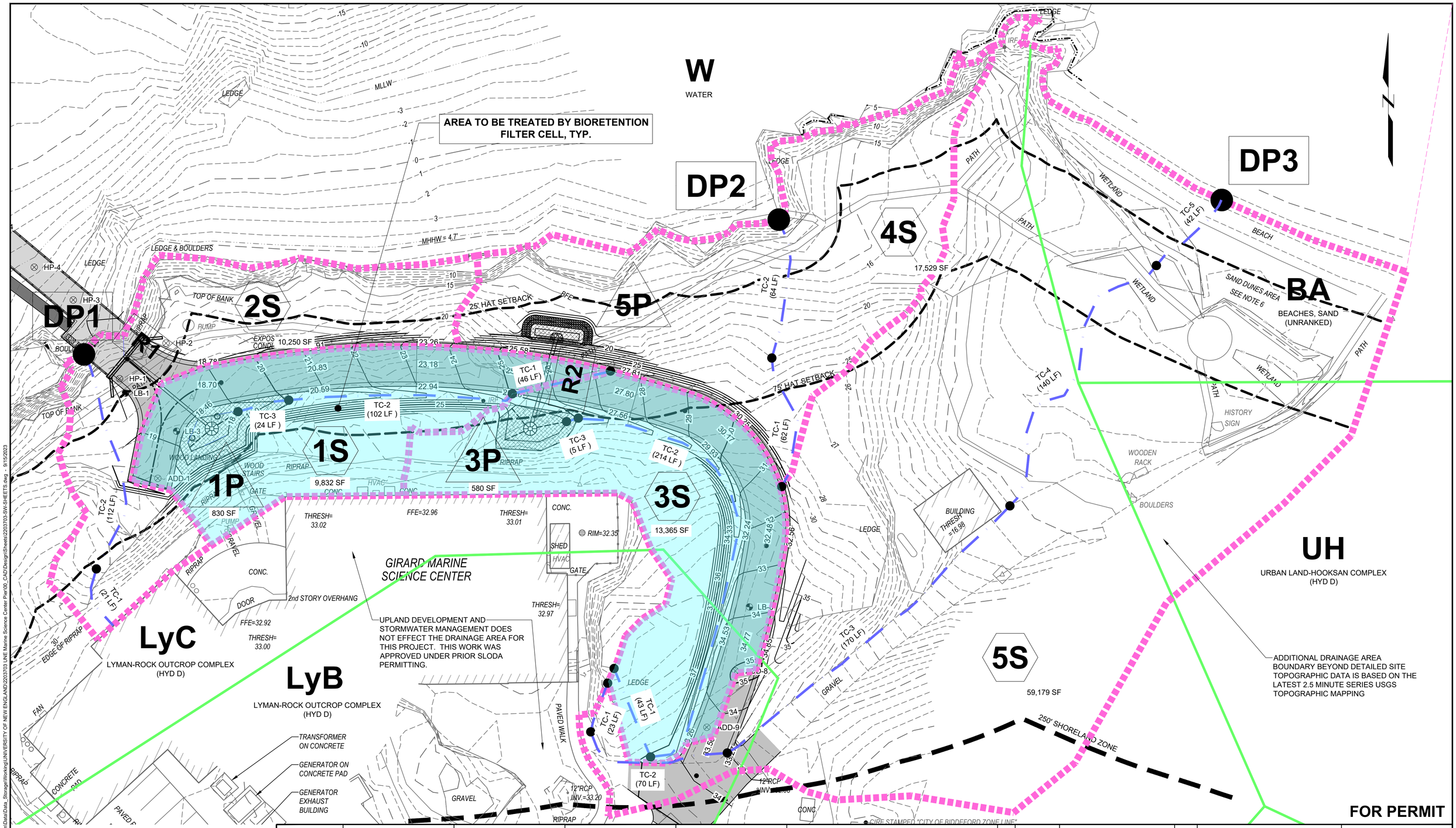

FOR PERMIT

0 20 40
SCALE, FEET

Attention:
0 1"
If this scale bar does not measure 1" then drawing is not original scale.

Designed:	DJB
Drawn:	JAM
Checked:	BJB
Approved:	BMM
P.E. No:	13033
GEI Project	2203703

GEI Consultants
GEI CONSULTANTS, INC.
5 MILK STREET
PORTLAND, ME 04101
(207)797-8901

UNE
UNIVERSITY OF NEW ENGLAND
11 HILLS BEACH RD.
BIDDEFORD, MAINE

UNIVERSITY OF NEW ENGLAND MARINE SCIENCE CENTER PIER
11 HILLS BEACH ROAD
BIDDEFORD, YORK COUNTY, MAINE

NO	DATE	ISSUE/REVISION	APP
4	9/14/2023	DEP PERMIT SET	DJB
3	6/28/2023	75% DESIGN SUBMISSION	DJB
2	2/15/2023	30% DESIGN SUBMISSION	DJB
1	12/9/2022	15% DESIGN SUBMISSIONREV	DJB
0	11/11/2022	15% DESIGN SUBMISSION	DJB

SHEET NAME
TREATMENT AREA PLAN

SHEET NO.
SW-03

DICASTELNUOVO, VINNIE \\geiconsultants.com\Data\Data_Storage\Working\UNIVERSITY OF NEW ENGLAND\2203703 UNE Marine Science Center Pier\00_CAD\Design\Sheets\2203703-SW-SHEETS.dwg - 9/15/2023

Attachment 8
Alternatives Analysis
and Memo

Alternatives Analysis

The Plans provided in attachments 5 and 6 detail the preferred alternative. This design was arrived at after extensive study of alternative locations and layouts for the pier over multiple years time. Alternatives considered in developing the proposed project are briefly described below.

2008-2010 Pier Feasibility Study

In 2008-2010, UNE completed a concept planning study for the proposed pier. In this study, nine alternative designs were developed for water access facilities along the UNE waterfront consisting of various configurations of piers, boat ramps, and upland access and support facilities. The alternatives were evaluated on a range of criteria including technical criteria, functionality, constructability, regulatory impacts, cost of construction, and others to identify a preferred facility location. The nine alternatives evaluated through this study are shown in the figure below. At the conclusion of this study, Site 7 (directly in front of the Marine Science Center building) was identified as the preferred facility location to develop a new pier facility that would consist of a pile-supported pier extending from shore out into the Saco River. This location is optimal for access to and from the MSC facility and on the water, and allows for all-tide berthing with a smaller structure and less impact than several adjacent alternatives that were considered. At the conclusion of this study it was determined that Site 7 was the preferred alternative to move forward with further planning and design.

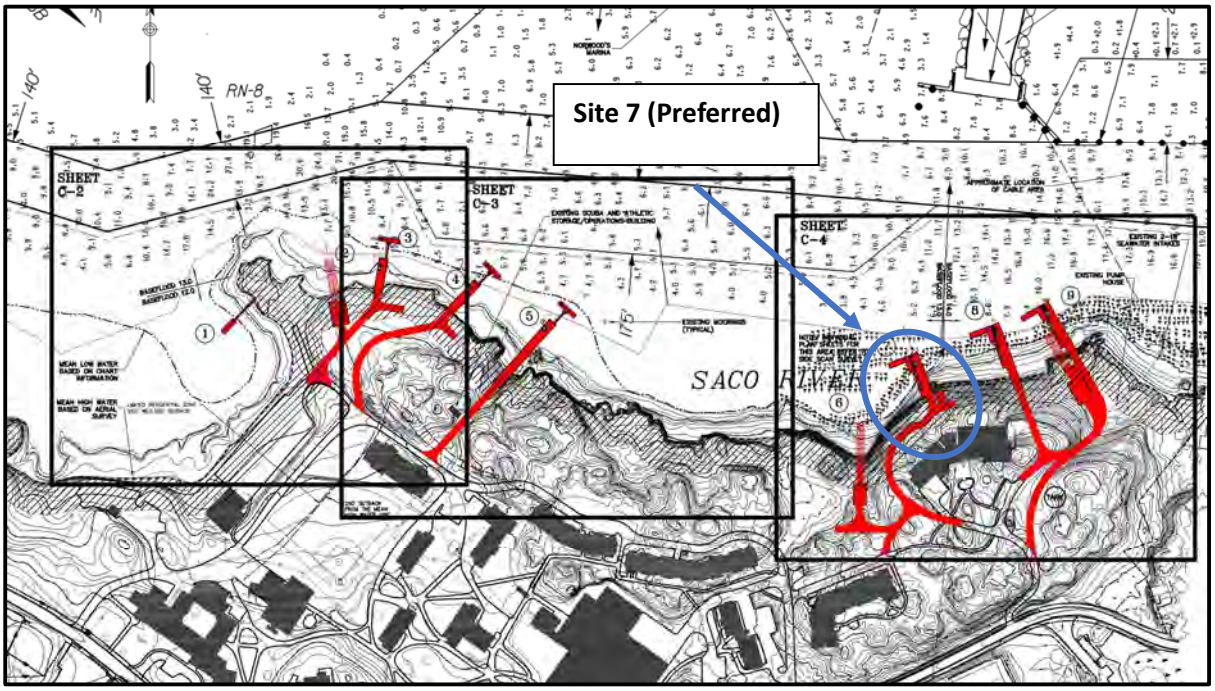

2015-2016 Pier Layout Study

After completion of the pier feasibility study described above, UNE undertook additional effort to study alternative pier layouts that would address the functional needs of the facility as well as the site exposure, berthing conditions, access requirements, and associated site impacts. During this study, numerous alternative pier layouts were considered which are depicted in the two figures that follow.

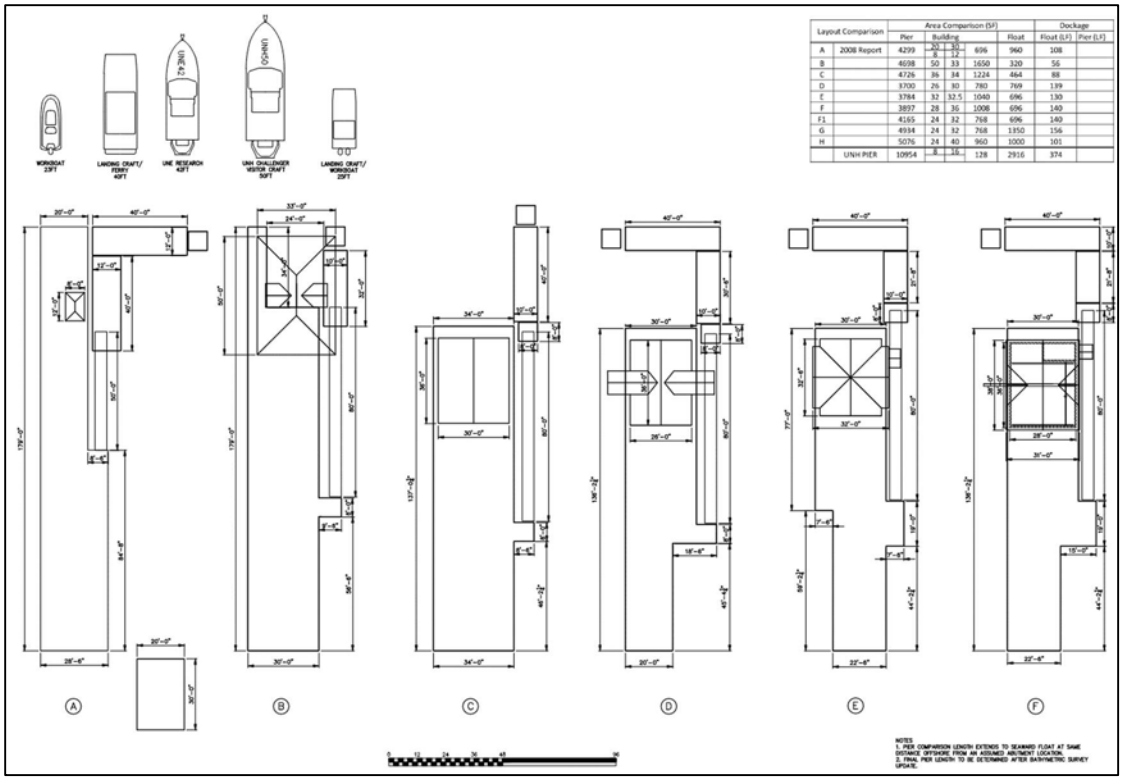

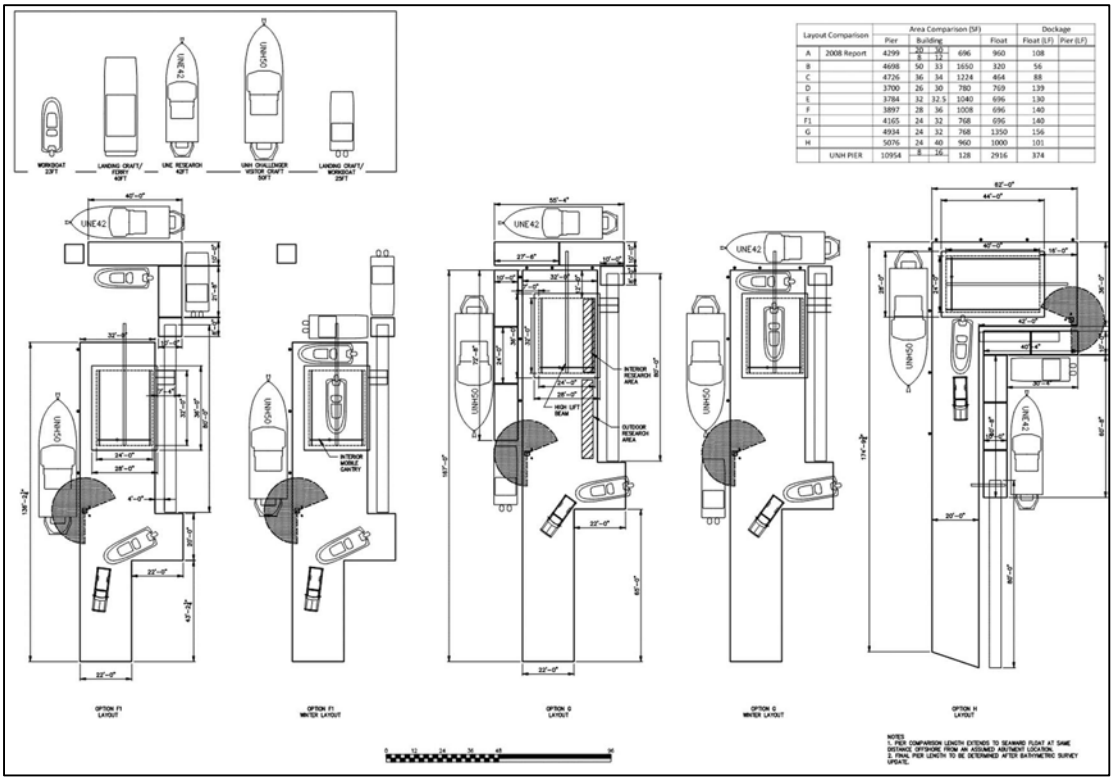

Further alternative development was completed in 2016 to address a realignment of the pier head parallel to the predominant direction of flow in the River for improved berth functionality. These alternatives considered input of the Biddeford Harbormaster and his knowledge of boating and

conditions on the Saco River after review of earlier layouts during a meeting in early 2016. The figure below depicts three alternatives considered during the study.

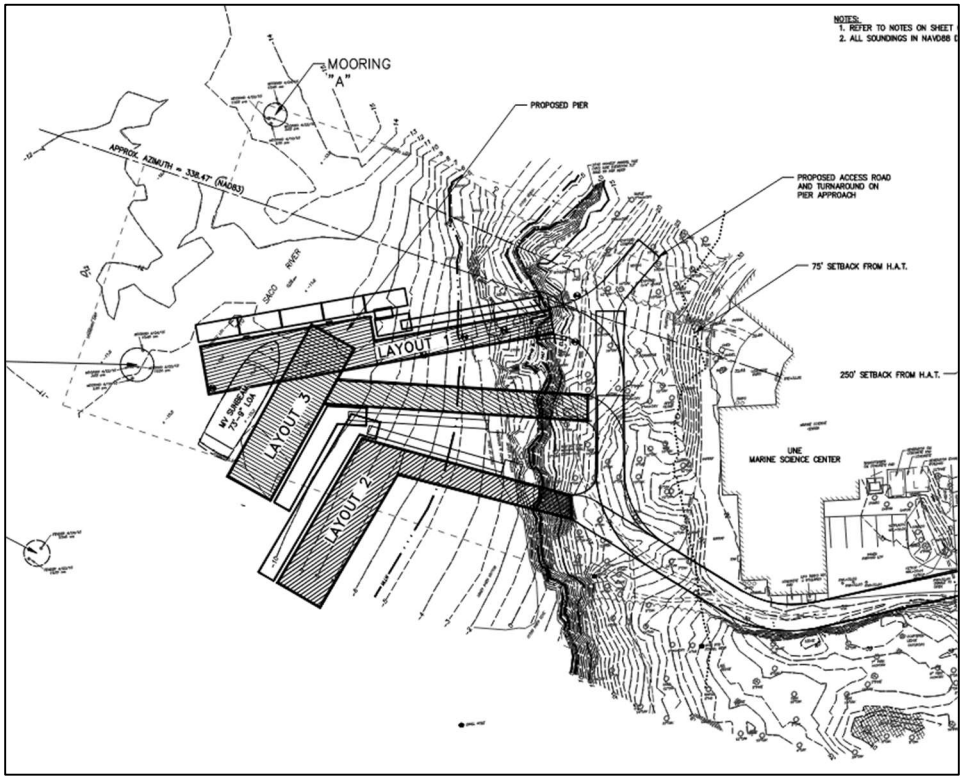

2023 Layout Refinement

During design refinement undertaken in 2023, the preferred alternative was identified as a combination of the pier approach from Layout 1, and the pier head from Layout 3, of the 2016 layout study. The Layout 1 pier approach represents the least impactful and most feasible option for upland site access. The Layout 3 pier head provides more desirable berthing conditions by aligning the main berth with flow directions in the River, and reaches sufficient depth to provide all-tide access for the range of vessels anticipated to use the facility. The layout was then refined somewhat to reduce the size of the structure to keep the dimensions to the minimum necessary to accomplish the functional goals of the project. During this refinement, the dimensions of the pier head were reduced from the initially proposed 28-feet wide by 100-feet long, to the currently proposed 23-feet 4 inches wide by 80-feet long. The dimensions of the float dock system were reduced somewhat, and the layout of fender piles was refined to reflect a functional design with minimum necessary dimensions and impacts.

The preferred alternative as currently presented represents a facility of the smallest dimensions possible to provide a functional facility that provides all-tide access for the range of vessels anticipated to use the facility, and ADA compliant access to the floating dock and gangway system and berthed vessels. While it could be possible to further reduce site impacts by further reducing the dimensions of the facility, any reduction beyond the size that is currently proposed would impact the proposed uses of the facility.

Do Nothing Alternative

A Do Nothing Alternative is the least impactful option, but would fail to address the goal of providing all-tide access to support UNE's marine research and educational programming through the marine science center. The existing seasonal floats and gangway located on the UNE campus upstream of the MSC building do not effectively meet these needs. Therefore, a Do Nothing alternative is not considered to be a feasible long-term solution.

Memo

To: Andrew Philippe, Director of Campus Planning

From: Daniel Bannon, P.E., CFM and Barney Baker, P.E.

c: UNE – Alan Thibeault
Site Design Associates – Tom Saucier, P.E.
GEI Consultants, Inc. - John Gareau, E.I.

Date: November 28, 2023

Re: Proposed GMSC Pier Location
University of New England, Girard Marine Science Center Pier
Biddeford, Maine
GEI Project No. 2203703

Summary and Purpose

The University of New England (UNE) proposes to construct a new pier on the Saco River adjacent to the Girard Marine Science Center (GMSC) to support research and educational programming. The project has been in development for more than 10 years and has gone through extensive planning and alternatives analysis in arriving at the design that is proposed. In October 2023, UNE staff held a meeting with several key stakeholders including the Biddeford and Saco Harbormasters, who raised questions as to the viability of relocating the pier further toward the east, downstream from the proposed location, in a revised alignment. The purpose of this memo is to summarize the process that has been undertaken for selecting the proposed pier location and to evaluate the advantages or disadvantages of the suggested alternative location compared to the proposed design.

Planning History

UNE has undertaken multiple studies to investigate locations and configurations for the proposed GMSC pier. These studies considered factors and constraints including but not limited to proximity to campus facilities, available water depths, site exposure to currents and wave action, upland site impacts, coastal wetland and habitat impacts, impacts to harbor uses such as fishing, recreational boating, and moorings, and estimated cost of construction. The proposed pier represents the preferred balance of these factors. The past studies that resulted in this design are briefly summarized below.

In 2008-2010, UNE completed a concept planning study to investigate opportunities for construction of improved water access to support marine science programs on campus. In this study, nine alternative design concepts were developed along the UNE waterfront consisting of various configurations of piers, boat ramps, and upland access and support facilities. The concept alternatives are shown in Fig. 1. The alternatives were evaluated on a range of criteria including technical criteria, functionality, constructability, regulatory impacts, costs of construction, and others to identify a preferred facility location. At the conclusion of this study, Site 7 (directly in front of the GMSC building) was identified as the preferred location to develop a new pier facility that would consist of a pile-supported pier extending from shore out into the Saco River. This location was determined to provide the best balance of site constraints and desired functions with good access from the GMSC, ability to achieve adequate water depths to allow for all-tide berthing of the anticipated vessels, and a location of river frontage semi-sheltered from currents and wave action.

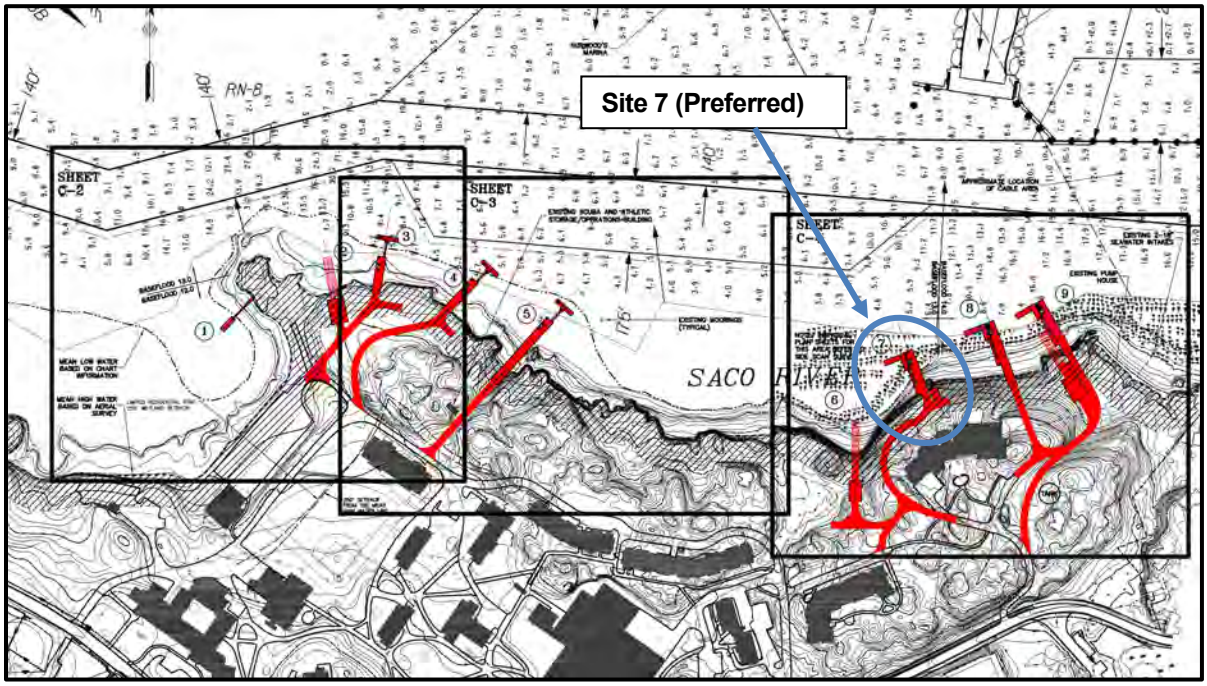

Fig. 1 – Alternative Sites Evaluated in 2008-2010 Study

After completing the pier feasibility study and identifying Site 7 as the preferred pier location, UNE undertook additional effort in 2015-2016 to study alternative pier layouts that would address the functional and vessel needs of the marine science curriculum as well as the site exposure, berthing conditions, access requirements, and associated site impacts. During this work, numerous alternative pier layouts were considered. Figs. 2 and 3 demonstrate some of the alternative layouts that were considered. This process allowed for consideration of desired pier dimensions and features, configurations of fixed structures and floating docks, pedestrian access needs, and other design criteria.

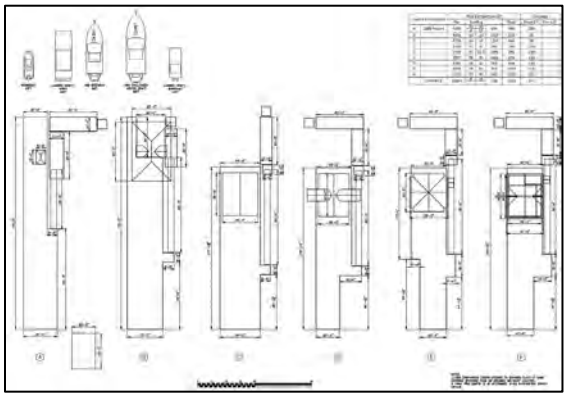

Fig. 2 – Sample of pier layout alternatives evaluated in 2015-2016 (1 of 2)

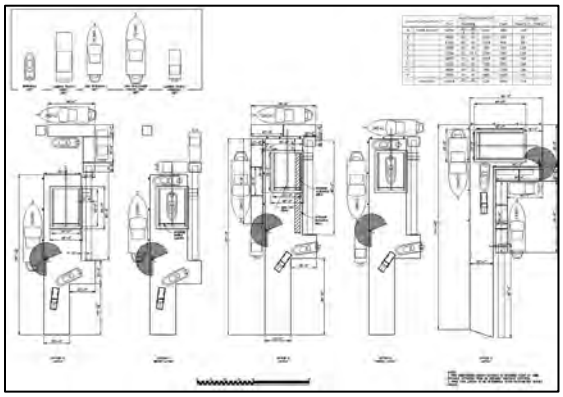

Fig. 3 – Sample of pier layout alternatives evaluated in 2015-2016 (2 of 2)

In February 2016, the proposed pier was reviewed with the with the Biddeford City Manager and key city representatives that included the Biddeford Harbormaster and Assistant Harbormaster and representatives from development staff and the Saco River Corridor Commission. Further input was gathered on river currents, recreational boating, and fishing activities resulting in the development of the three layout alternatives shown in Fig. 4 (labeled as Layout 1, Layout 2, and Layout 3). The

Harbormasters suggested that a layout with pier head oriented along the predominant direction of current such as shown in Layouts 2 and 3 would be preferable for vessels berthed at the facility. The Harbormasters also suggested that locating the pier closer to shore to minimize impacts to existing moorings and fishing activities would be preferable. These suggestions were taken into account in the next stages of design. A summary of the pier layout alternatives considered is provided in the attached memo from Baker Design Consultants dated March 22, 2016 titled "Consideration of an Alternate Pier Configuration as recommended by the City of Biddeford".

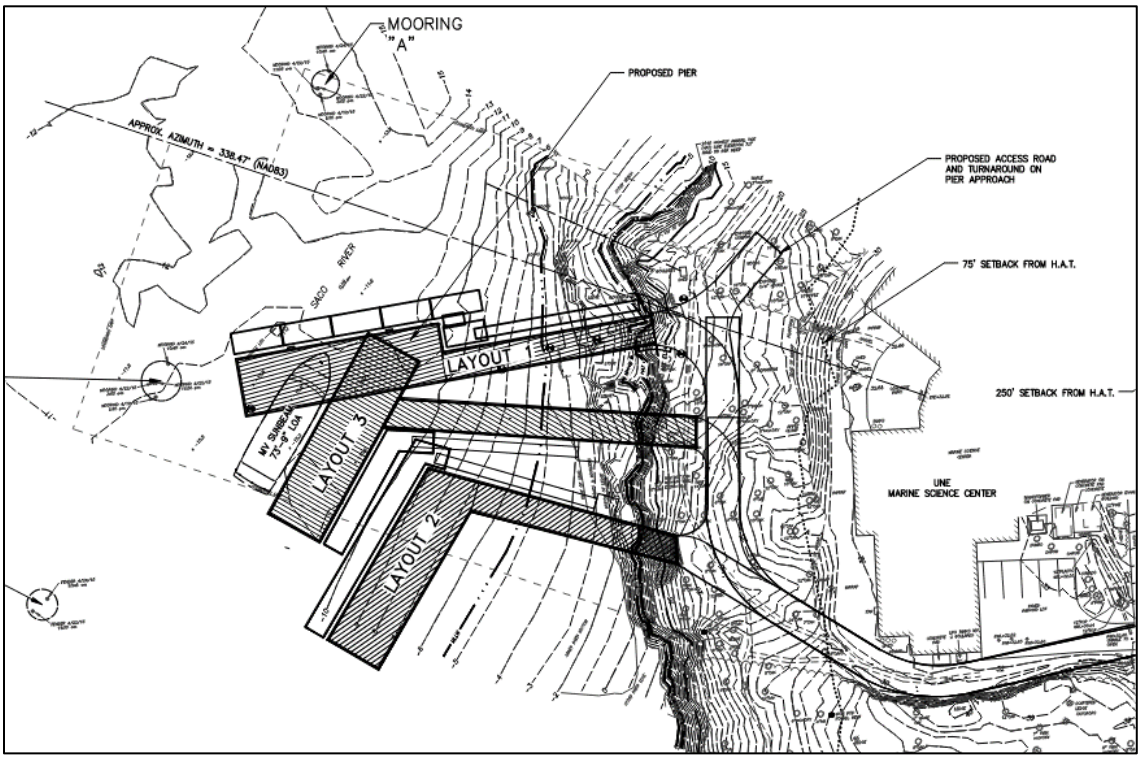

Fig. 4 – Pier layout alternatives developed in 2016 to address Harbormaster feedback

Final Design

In 2022, UNE resumed formal design development for the proposed GMSC Pier. At the start of this process, a layout was developed based on the 2016 layouts shown in Fig. 4 that reflected a combination of the pier head from Layout 3 and the pier approach from Layout 1. This new layout represented the optimal balance of site and functional constraints and upland access, with a pier head orientation that provides a main berth that is aligned with flow directions in the river, and sufficient depth to provide all-tide access for the range of vessels anticipated to use the facility.

The pier dimensions were refined through the design process to keep the structure to the minimum dimensions necessary to achieve the intended functions. This process resulted in a 22% reduction in footprint of the fixed pier, a 47% reduction in the footprint of floating docks, and a 17% reduction in the quantity of piles. Design development was advanced to 75% complete based on this design. The 75% design layout is shown in Figs. 5 and 6.



Fig. 5 – Proposed Pier Layout Vicinity Plan

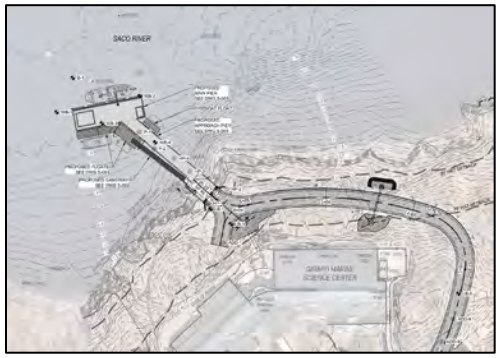

Fig. 6 – Proposed Pier Layout Site Plan

Alternative Location Analysis

In October 2023, UNE staff held a meeting to review the project with several key local stakeholders. During this meeting, the Biddeford and Saco Harbormasters suggested an alternative concept for the pier location that would relocate the pier further downstream from the proposed location as approximately shown in Fig. 7. In support of this alternative location, the Harbormasters cite deeper water, less impact to existing moorings, a location with more favorable water currents, and concerns of sediment deposition and potential need for dredging in the proposed pier location. Additionally, the Harbormasters have raised concerns about potential ice exposure given the history of icing issues at the Camp Ellis Pier directly across the River.

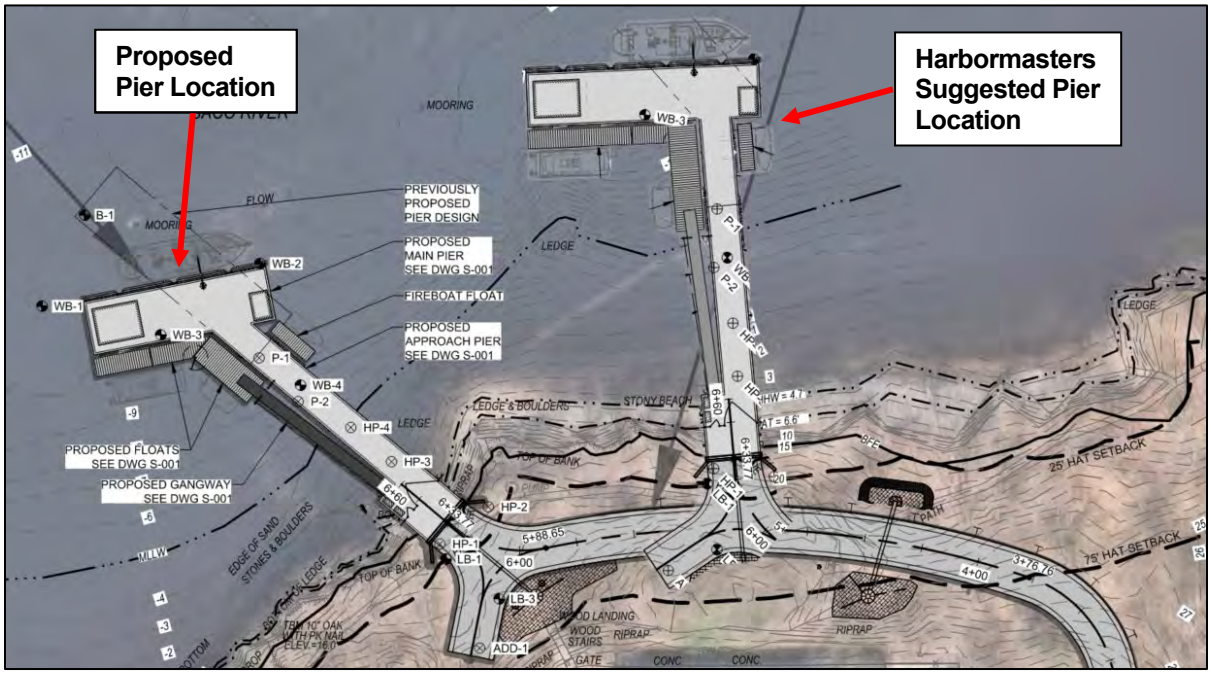

Fig. 7 – Alternative Suggested Pier Location

Review of Suggested Alternative Location

GEI has reviewed the suggested alternative layout and provided an evaluation of factors relating to the advantages and disadvantages of the proposed design versus the suggested alternative.

Water Depth

One reason for suggesting the alternative pier location is greater available water depths.

In the proposed design there is 5 to 6 feet of depth at mean lower low water (MLLW) at the main berth on the outer face of the pier which is sufficient for the proposed vessels using the facility. The suggested alternative location does have greater depth at the main berth, approximately 11 to 12 feet at MLLW. While this additional depth could allow larger vessels to use the pier, it is not needed to support the currently proposed and/or future envisioned uses.

The proposed design has 3.5 to 5 feet of depth at MLLW at the proposed floats on the inside of the pier, with sufficient distance to the MLLW line and a generally soft substrate near the floats to minimize risk of damage from vessels grounding out. In the suggested alternate location, the subtidal bottom slopes up rapidly behind the pier head. The available depth at the floats varies from 2 to 12 feet at MLLW, however the floats are in close proximity to a shallow ledge outcrop and there are concerns of hazardous conditions for vessels accessing these floats. In order to provide safe navigation to the floats the pier would need to be moved further downstream and/or extended further out into the River adding to its size, footprint, and cost.

From the standpoint of required water depths and navigational safety, the proposed design is preferred.

Exposure to Currents

The Saco River experiences currents due to tidal influence and riverine flows. To understand currents on the River, GEI has reviewed data gathered by the US Army Corps of Engineers as part of their study of erosion at Camp Ellis[1]. Figs. 8 through 11 demonstrate trends in current through differing stages of the tide. The magnitude of the current's velocity is represented by the length of the yellow arrows, with a reference arrow of 50 cm/s provided in the figures, while the current direction is indicated by the direction of the arrow. As can be seen from this data, the proposed pier location benefits from the natural shape of the shoreline which generally results in lower current velocities at the proposed location than at the downstream constriction of the River where the suggested alternate location would be located.

The lower current velocities at the proposed pier location compared to the suggested alternate result in more favorable conditions for vessels berthing at the pier, greater safety for vessels and users, and reduced structural loading on the pier. For these reasons, the proposed pier location is preferred from the standpoint of exposure to currents.

[1] Saco River and Camp Ellis Beach Section 111 Shore Damage Mitigation Study, Appendix C – Data Collection and Modeling Report, prepared by Woods Hole Group and Aubrey Consulting for the US Army Corps of Engineers, October 2006

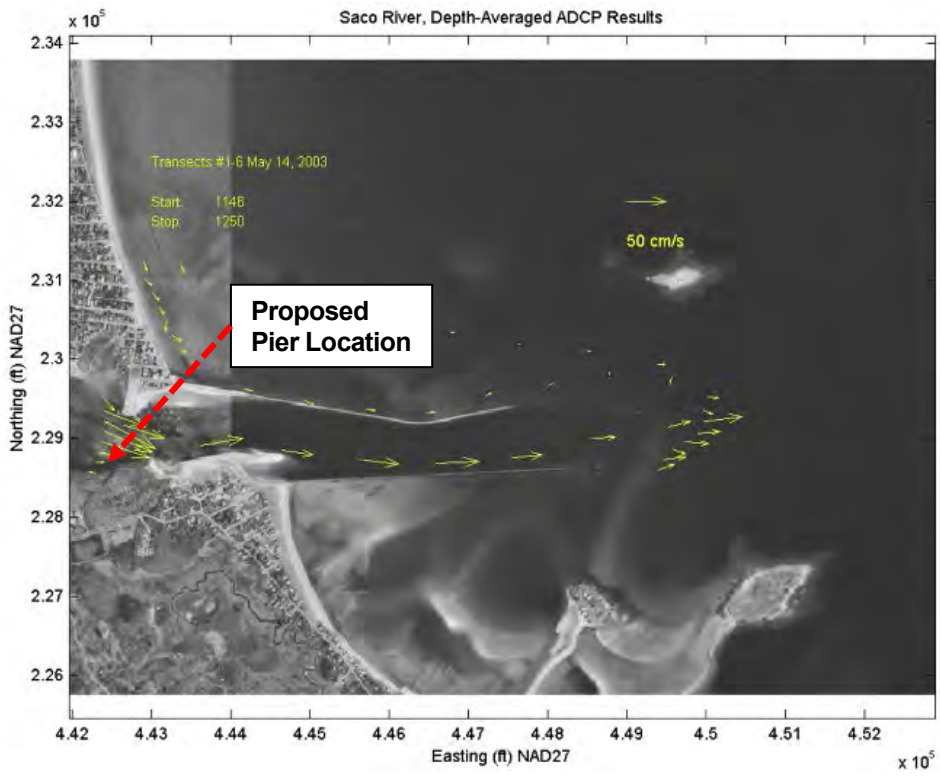

Fig. 8 – Sample of USACE Current Monitoring Data

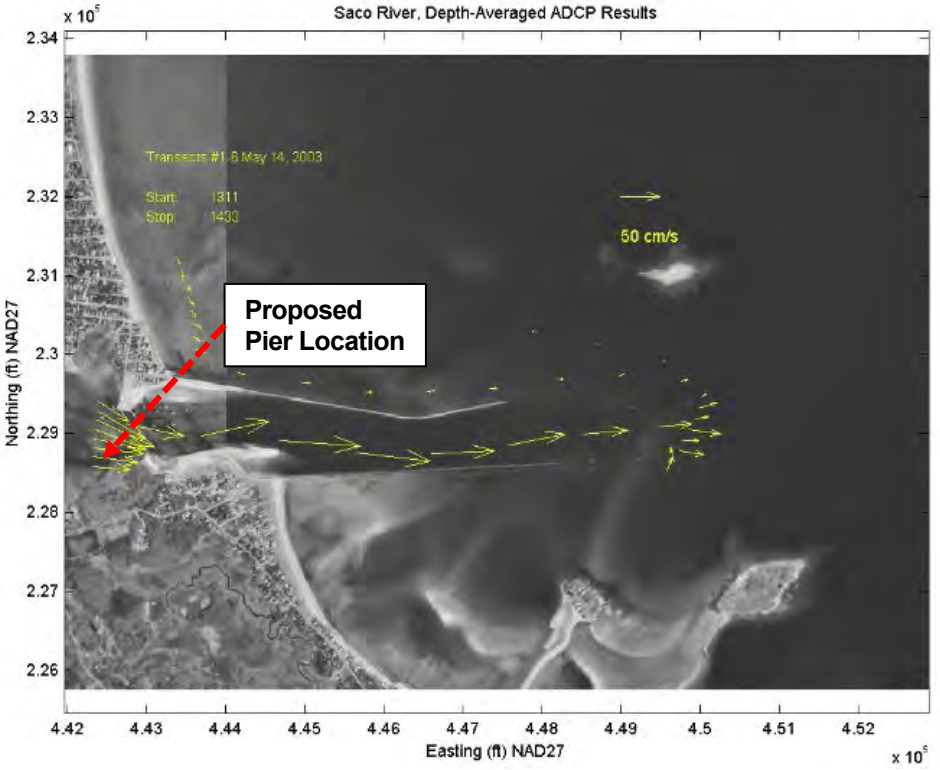

Fig. 9 – Sample of USACE Current Monitoring Data

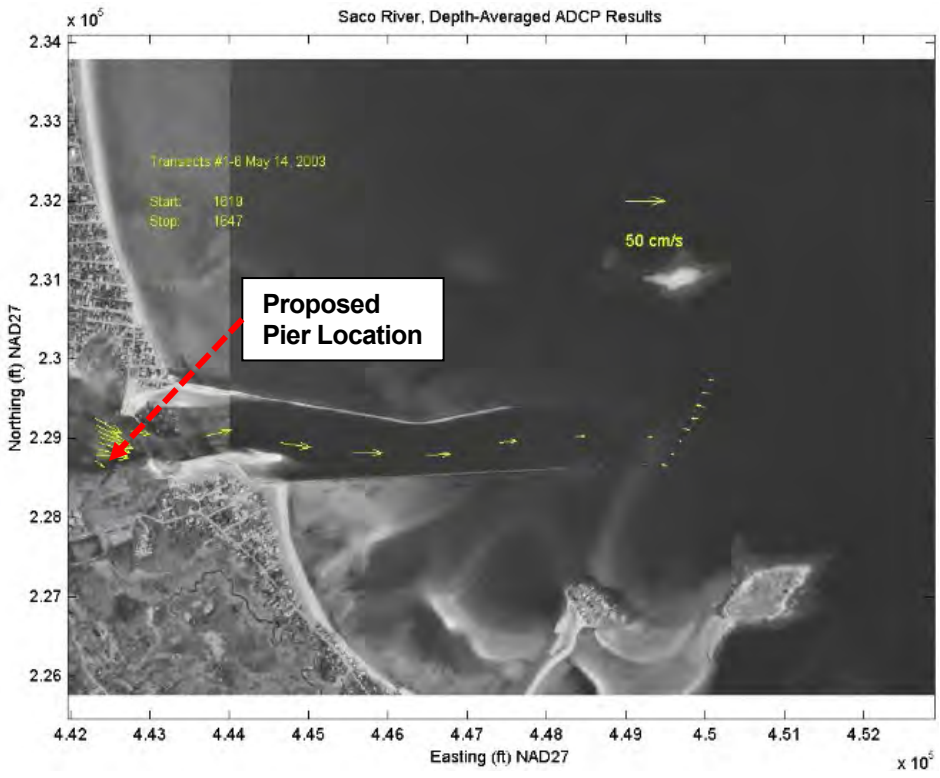

Fig. 10 – Sample of USACE Current Monitoring Data

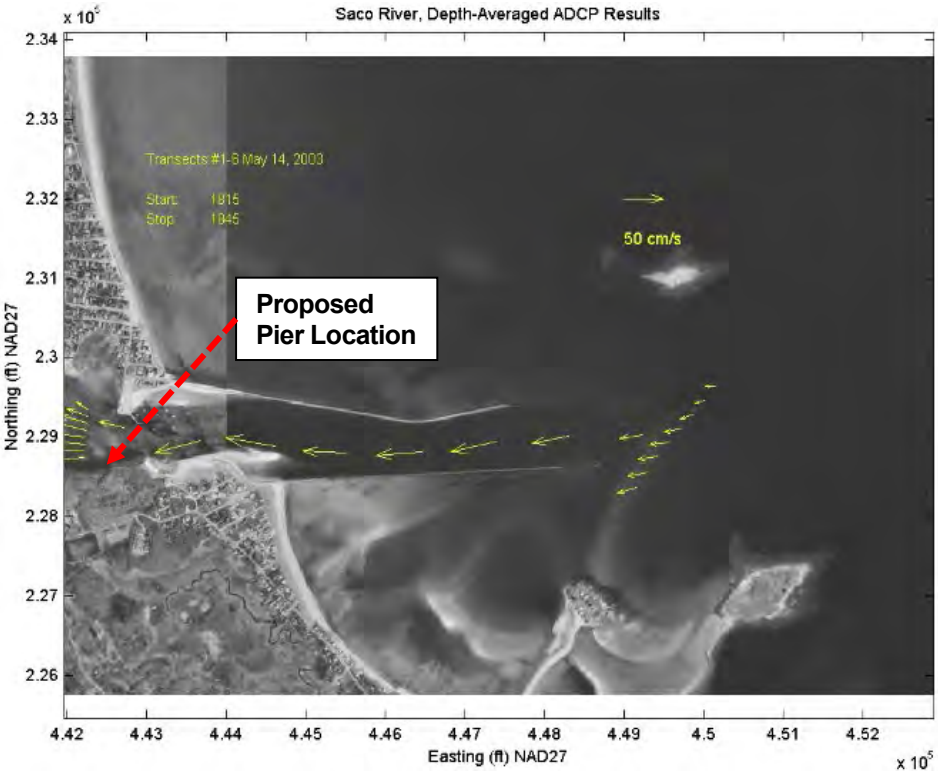

Fig. 11 – Sample of USACE Current Monitoring Data

Location Relative to River Sediment Deposition

The Harbormasters commented during the October 2023 meeting that the proposed pier location may be subject to sediment deposition that may impact pier navigation over time and require dredging in the future to restore water depths. As part of the project development, bathymetric surveys were completed in the pier area in May 2015 and again in November 2022. Fig. 9 provides an overlay of these two surveys (2022 contours are shown blue, 2015 contours are shown grey and red). In comparing these two surveys, there is negligible difference between the surveys that were taken 7.5 years apart. While there are minor differences that can be observed in contour locations and shapes, these could be attributed to the bathymetric survey accuracy and method of modeling the three-dimension surfaces used to create the contours. None of the differences are significant enough to suggest that there are large scale trends of deposition in the project area. Based upon this review, there is no indication that sediment deposition will be a substantial concern in the proposed area of the pier, and it does not appear that the suggested alternate pier location offers an advantage.

The proposed pier location does not appear to be in an area that is subject to notable sediment deposition and remains the preferred location.

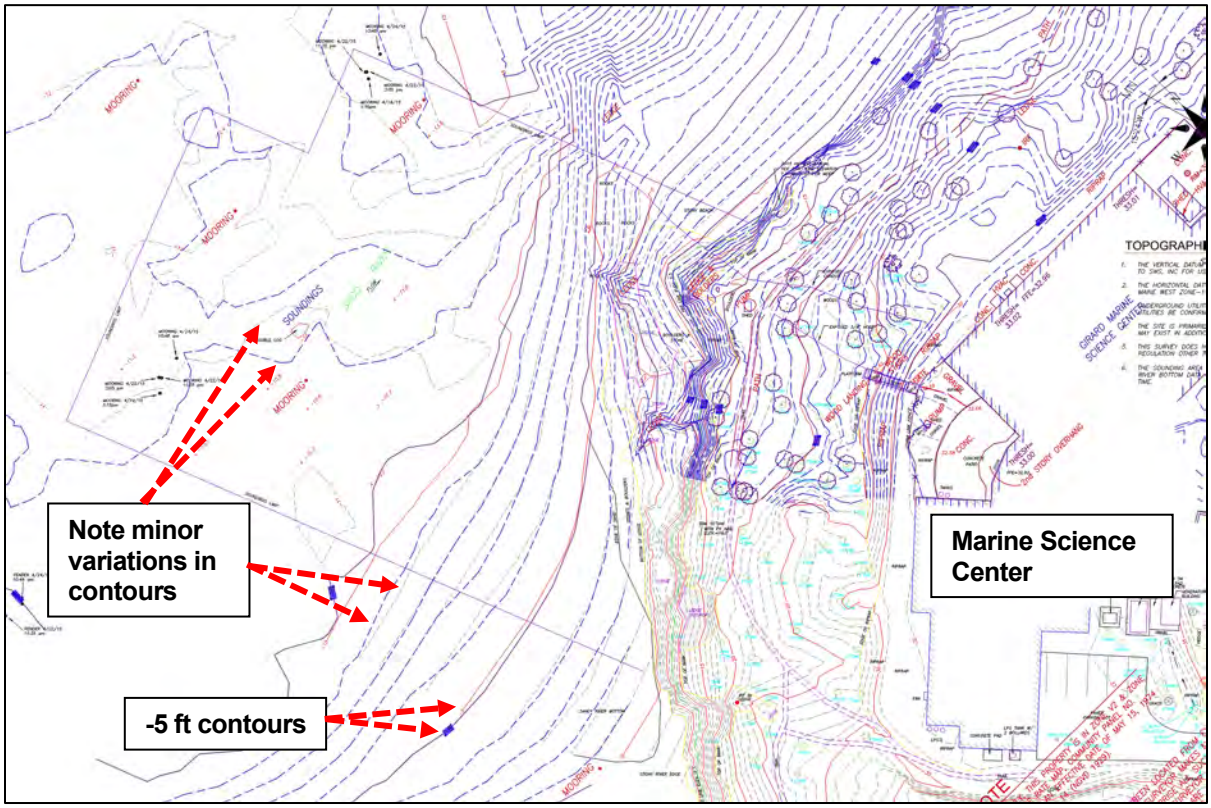

Fig. 12 – Comparison of 2022 (blue) and 2015 (grey and red) bathymetric contours

Exposure to Icing

The Harbormasters have raised concerns about exposure of the pier to winter icing. Icing on the Saco River is also a concern of UNE and the design team. The River is known to experience ice floes during the winter season that have historically been damaging to vessels at Camp Ellis. In terms of designing the fixed pier structure, the exposure to ice loading has been considered and the pile

supported pier structure will be able to sustain the forces from ice. The primary concern of the design team with winter icing is related to the impact on floating docks and berthed vessels. The ability to keep the facility in operation throughout the winter months when exposed to icing is still being evaluated by UNE. Additional steps are planned to monitor the site through winter conditions to better understand the extent of icing and potential impacts. The results of this investigation will inform the facility operations and vessel berthing plans. Methods being considered to mitigate the risks of ice impact to floats and vessels may involve the installation of additional temporary or permanent protective measures and/or limiting use of the pier during times when icing is anticipated. Irrespective of the ice protection and operational measures that may ultimately be included, the proposed pier location has less velocity exposure to icing than the suggested alternate location given its location and therefore reduced exposure. For this reason, the proposed design is preferred.

GEI has designed the fixed pier structure to resist the impact associated with river icing. Irrespective of pier location, the UNE will need to plan facility operation during periods of icing to manage risk associated with reduced facility use.

Impact to Moorings

The proposed pier layout is in close proximity to one existing known mooring which will likely need to be relocated to allow for the proposed construction. The suggested alternative is also in close proximity to one existing known mooring which would also need to be relocated if this alternative was used. Therefore, from the standpoint of mooring impacts, the proposed design and the alternative are believed to be similar.

To address anticipated impacts to moorings, GEI and UNE are prepared to work with City staff as necessary to allow for mooring adjustments to accommodate the proposed pier.

Conclusions and Closing

GEI has reviewed the concerns raised by the Saco and Biddeford Harbormasters and evaluated their impact on the proposed design, reviewed the history of planning that led to the current design location and layout, and reviewed the potential advantages and disadvantages offered by the suggested alternative pier location. While we respectfully value the input and suggestions for a layout alternative, it is our opinion that the proposed design represents the preferred balance of project requirements and site constraints. Compared to the suggested alternative, the proposed design achieves adequate water depth, provides safe navigation, results in a structure of smaller overall dimensions with less coastal wetland impact, does not appear to be subject to significant sediment deposition, and locates the pier in a location that is less exposed to current and icing impacts. For these reasons, GEI recommends that the current design and pier location be maintained.

We would be happy to discuss any elements of this memo at your convenience. Please contact Dan Bannon (dbannon@geiconsultants.com) or Barney Baker (bbaker@geiconsultants.com) with any questions.

Attachment
DJB:BJB:bdp
\\geiconsultants.com\data\Data_Storage\Working\UNIVERSITY OF NEW ENGLAND\2203703 UNE Marine Science Center Pier\11_SUBMISSIONS\2023-11-29 -Revised Memo on Suggested Alternative Location of Pier\UNE MSC Pier - MEMO_Alternative Pier Location_2023-11-28.docx

Attachment 1

2016 Pier Alternatives Memo

BAKER DESIGN CONSULTANTS
Civil, Marine and Structural Engineering

Project: **15-07 UNE Pier Layout Alternatives**

Date: March 22, 2016

To: Alan Thibeault; University of New England

Copy: Tom Saucier; Site Design Associates
Dan Bannon; Baker Design Consultants,

Subject: Consideration of an Alternate Pier Configuration as recommended by the City of Biddeford

\\BDC-SRV\PROJECTS\15\15-07 UNE MSC WATERFRONT\DESIGN\ALTERNATE PIER LOCATION STUDY\15-07 UNE PIER ALTERNATIVES MEMO MARCH 2016.DOCX

MEMO

Introduction

Baker Design Consultants (BDC) completed a pier feasibility study in 2010 study for the University. The work first defined the type of pier and parameters necessary to support the Marine Science program and then looked at the entire Saco River shoreline of the Biddeford Campus for suitable sites. Concept pier layouts for nine (9) sites were prepared and then compared in a matrix format that looked at the ability of the pier to meet the program objectives, the respective shore and waterside development challenges, the environmental impacts associated with each solution and the approximate cost and scope for construction. The pier was added to the long-term facility plan for the University.

In September 2015, BDC was retained to develop the design for a new pier at the site that had been most favorably rated in the 2010 study. Site No. 7 met the operational objectives for the pier and was located close to the Marine Science Facility pier with access to deep-water. The design has advanced through several stages of UNE MSC faculty review to define an optimum footprint and access for the pier. This was followed by site survey and geotechnical borings to verify water depths and subsurface conditions at the proposed pier location. Initial contact with the regulatory agencies has been made, but no permits applications have been filed to date. The Biddeford Harbormasters were invited to the site to review the pending (now complete) geotechnical exploration and the pier was discussed briefly at this meeting.

In February, Barney Baker and Alan Thibeault met with the City Manager and key city representatives that included the Harbormasters and representatives from development staff and the Saco River Corridor Commission. Preliminary plans for the pier were reviewed and discussed with an opportunity for staff to share comments on the proposed design. The Harbormasters were particularly keen advocates for design adjustments based on their knowledge and experience with the Harbor. All City staff was supportive of the pier and recognized the benefits it will provide to the Marine Science program at UNE.

This memo considers comments made by City staff on the current design and considers two Alternate Layouts to evaluate the changes requested. Refer to the appended drawings that show the three (3) Layouts discussed in this memo. Sheet C-1 shows the pier site in the relation to other features in the Saco River Basin.

Sheet C-1 - Saco River Basin
Sheet 1 of 4- Layout 1- Current Design
Sheet 2 of 4- Layout 2- Incorporating all City Recommendations
Sheet 3 of 4- Layout 3- Modification proposed by BDC
Sheet 4 of 4- Composite showing all 3 Layouts

Recommendations for Pier changes made by the City.

The City suggested changes to the proposed pier (Layout 1) at the February 2016 review meeting are outlined below with comments from Baker Design Consultants (BDC Response). These collectively advocate for the pier to be relocated inshore, upstream and realigned to be more parallel with the shore.

Alternate Pier configurations (Layout 2 and Layout 3) are appended. These were prepared to investigate and illustrate the changes that would be necessary to incorporate the recommended pier changes. The Table on page 4 provides a summary comparison of the proposed design (Layout 1) with the Alternate Layouts.

1. Place the pier closer to shore to minimize existing moorings impacts.

The Harbormasters were concerned that the proposed pier (Layout 1) impacted the location of several moorings and that this would create specific hardship for individual mooring holders and harbor management in general. The Harbor masters made general reference to several mooring holders, but did not have access to a plan to show where these were located.

BDC Response. Both Alternate Layouts (2 & 3) move the pier closer towards shore. Refer to tabulated mooring clearances in the Table that follows for each Layout considered.

The moorings in the pier area at the time of the April 2015 survey were put on the plan and a general search was made of google earth aerial photographs going back several years for others that might not have been in the water at the time of the field survey.

The three recorded moorings nearest the pier site are identified on the attached plans as Mooring "A", "B", and "C". For each of the pier layout alternates considered, the distance from the approximate mooring center point to the nearest point on the pier is tabulated. A clear distance in excess of 110 to 120-ft is considered an acceptable mooring clearance to the pier

2. Consider pier impacts to nearshore fishing.

The Harbormasters indicated the nearshore at the pier location was used by fishermen that use small boats to fish along the southern shore of the river from upstream to downstream. The proposed pier would require boaters to move out and around the pier and may be perceived as a barrier to the fishing activity. It was pointed out that any new pier at any waterfront location will have a similar impact on near shore navigation, but moving the pier inshore would reduce the necessary detour.

BDC Response: It is acknowledged that while the pier would influence nearshore navigation, it was well clear of the designated federal channel and boats moving around the pier would not conflict with channel traffic. The nearshore fisherman in small boats could pass under the approach section of the pier at all states of the tide in Layout No. 3 but would be restricted at low water by floats and gangway in Layouts 1 & 2.

3. Relocate pier further upstream and change orientation to reduce current exposure.

The Harbormasters confirmed that the channel restriction located just seaward of the pier created fast currents that ran parallel to shore. Based on their knowledge of the harbor, they suggested the pier would be better rotated upstream parallel to the current and moved upstream and inshore from the Layout 1 location. This would put the pier in water with less tidal current and make docking easier and safer.

BDC Response. BDC indicated they had studied a 2006 study by the Army Corps of Engineers of currents at the pier location and had already oriented the pier upstream and away from the highest tidal currents while maintaining deep water access to both sides of the pier. It is recognized that moving the pier upstream reduces the current exposure, but because the water shoals, the vessel berthing is less efficient. BDC feels strongly that dredging is a last resort because of high cost, unreliable timeframes for periodic maintenance.

Alternate Layouts 2 & 3 benefit from the local knowledge and recommendation of the Harbormasters by effectively placing the pier in calmer water with an improved docking angle to the current. However, in both alternate configurations there is a decrease in the pier face docking provided by the pier. Layout 3 also would require dredging to maintain float access. Refer to the attributes for each Layout in the Table that follows.

4. Reduce length of pier access road to reduce visual impact on shore.

This comment was made in consideration of tree cutting, vegetation removal, and regrading that would be necessary to create an access road to the pier. The road access is located within the 250' Shoreland Zone. The visual impact will be carefully reviewed by the Saco River Corridor Commission. It was suggested that the access road length to the pier could be reduced by relocating the pier upstream from the current Layout 1 location.

BDC Response. Preliminary road alignment and profiles are provided for each layout in the appended drawings and compared in the Table on page 4. In each case, the access road extends around the existing Marine Science Center building to provide equipment and vehicle access to the pier. At the pier abutment it is necessary to provide a vehicle turnaround. Options that locate the pier approach further upstream require a sloped pier approach connector in order to accommodate the steeper grades at the shore This undesirable feature is alleviated by providing a turn-around space on the Pierhead.

Alternatives Study Results summary

In summarizing the results of this Alternatives Study, the following points can be made.

- The local knowledge and insight provided by the City is both timely and helpful. The input provided both validates the Layout 1 design development to date and creates the opportunity to make small design improvements to reduce the tidal current exposure at the pier.
- Layout 2 does not work because of the steep shoreside access and the need to consider dredging in order to effectively use both sides of the pier.
- Layout 3 benefits from inside docking of small vessels, reduces access road impacts on shore with minimal concessions in water depth. However, the footprint of the pier (and cost) is increased and it is necessary to slope the connector pier to make the shore transition work. While the geotechnical fieldwork connected to date would be useful, additional geotechnical work is needed to verify subsurface conditions.

Moving forward, we recommend that Layout 3 be considered by UNE staff as a viable alternative for consensus approval with City stakeholders in advance of further design and regulatory discussion.

Please contact me with any questions.

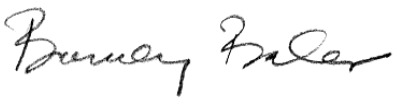

Barney Baker, PE
Principal
JN 15-07

Table 1 – Pier Layout Alternatives Comparison

This Table below compares the proposed pier design (Layout 1) with two alternative layouts (Layouts 2 and 3) that were developed with consideration of City recommendations and key criteria that relate to size and type of impacts, facility safety and functionality that were used in the original site analysis.

	LAYOUT 1 Proposed Design	**LAYOUT 2 Alternate**	**LAYOUT 3 Alternate**
Outer face of Pier, Distance from HAT	193'	110'	152'
Orientation of Berth	40 DEG WNW	10 DEG WSW	11 DEG WSW
Setback to nearest mooring	A - 110' B - 37' C - 133'	A - 176' B - 120' C - 127'	A -121' B - 76' C - 117'
Impacted moorings	B	None	B
Setback to federal anchorage	147'	248'	204'
Water Depth Available at MLLW (no dredging)	Downstream Face – 6' Upstream Face – 5.5'	Seaward Face – 4.5' Landward Face – 1'	Seaward Face – 5.5' Landward Face – 5'
Berthing Available	Downstream Face – 100' Upstream Face – 100'	Seaward Face – 104' Landward Face* – 84' **Dredging Required*	Seaward Face – 110' Landward Face – 57'
Length of pier approach connector	100'	102'	147'
Slope of Pier Approach	No slope	1V:20H	1V:25H
Length of access road	390'	295'	330'
Access Road Gradient	*200' @ 2%* *150' @ 10%* *40' @ 0%*	*200' @ 2%* *95' @ 10%*	*200' @ 2%* *110' @ 10%* *20' @ 0%*
Length of pedestrian route from MSC building to Pier	120'	230'	170'
***Dredging Required**	No	*Yes	No
Berthed vessel alignment to currents	~40 deg	Parallel	Parallel
Pier Area	Approach – 1,400 SF Pier Head – 2,800 SF Total – 4,200 SF	Approach – 1,300 SF Pier Head – 2,800 SF Total – 4,100 SF	Approach – 2,100 SF Pier Head – 2,800 SF Total – 4,900 SF
Pier Support Conditions	Pier approach supported on shallow ledge, ability to span across transition area and support pier head on deep piles.	Pier head and majority of piles may be located in transition area with challenging geotechnical conditions. Need to confirm with additional geotechnical information.	Pier head likely located beyond transition area where the majority of piles can be driven to ledge without socketing. Need to confirm with additional geotechnical information.
Availability of geotechnical information	Geotechnical program completed	Pier is located a significant distance from any borings/probes, additional subsurface investigation required	Pier is located near the original boring/probe locations, but subsurface information will need to be supplemented with additional data.

Appendix A – Concept Plans

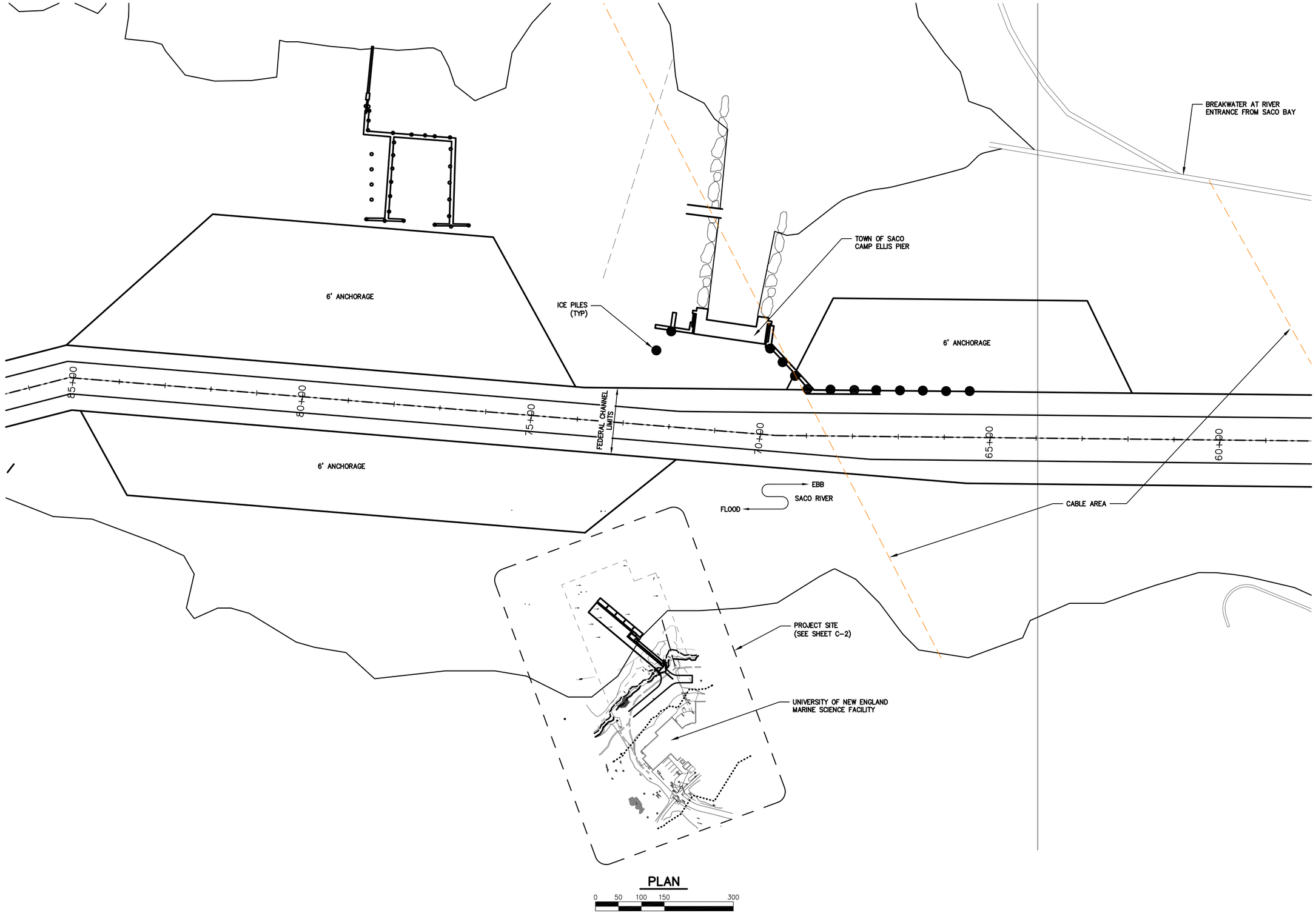

PLAN

0 50 100 150 300

\\bdc-srv\projects\15\15-07 une msc waterfront\cad\15-07 une msc waterfront civil3d (djb-nov-2015).dwg 1/25/2016

BAKER DESIGN CONSULTANTS
Civil, Marine, and Structural Engineering
7 Spruce Road • Freeport • Maine • 04032 • 207-846-9724 • info@bakerdesignconsultants.com

NO.		DATE	INT.
A	PROGRESS REVIEW SUBMISSION	6-25-15	BJB

DESIGNED BY:
DRAWN BY: JJC
CHECKED BY: BJB
SCALE: AS SHOWN

SHEET TITLE: SACO RIVER BASIN

PROJECT: UNIVERSITY OF NEW ENGLAND
UNE MSC WATERFRONT
BIDDEFORD, MAINE

DATE
FEBRUARY 2015

CONTRACT NO.
15-07

SHEET NO. C-1

REV. A

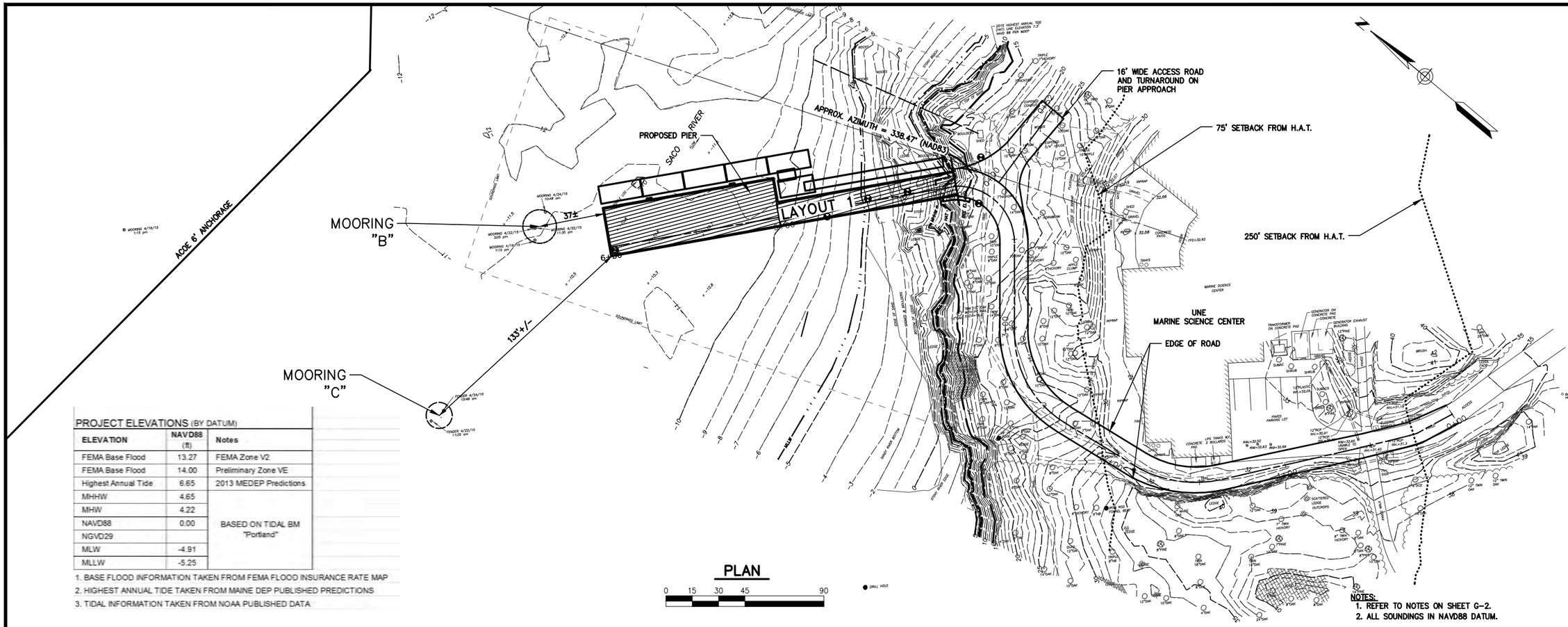

PLAN

0 15 30 45 90

PROJECT ELEVATIONS (BY DATUM)		
ELEVATION	NAVD88 (ft)	Notes
FEMA Base Flood	13.27	FEMA Zone V2
FEMA Base Flood	14.00	Preliminary Zone VE
Highest Annual Tide	6.65	2013 MEDEP Predictions
MHHW	4.65	BASED ON TIDAL BM "Portland"
MHW	4.22	
NAVD88	0.00	
NGVD29		
MLW	-4.91	
MLLW	-5.25	

1. BASE FLOOD INFORMATION TAKEN FROM FEMA FLOOD INSURANCE RATE MAP
2. HIGHEST ANNUAL TIDE TAKEN FROM MAINE DEP PUBLISHED PREDICTIONS
3. TIDAL INFORMATION TAKEN FROM NOAA PUBLISHED DATA

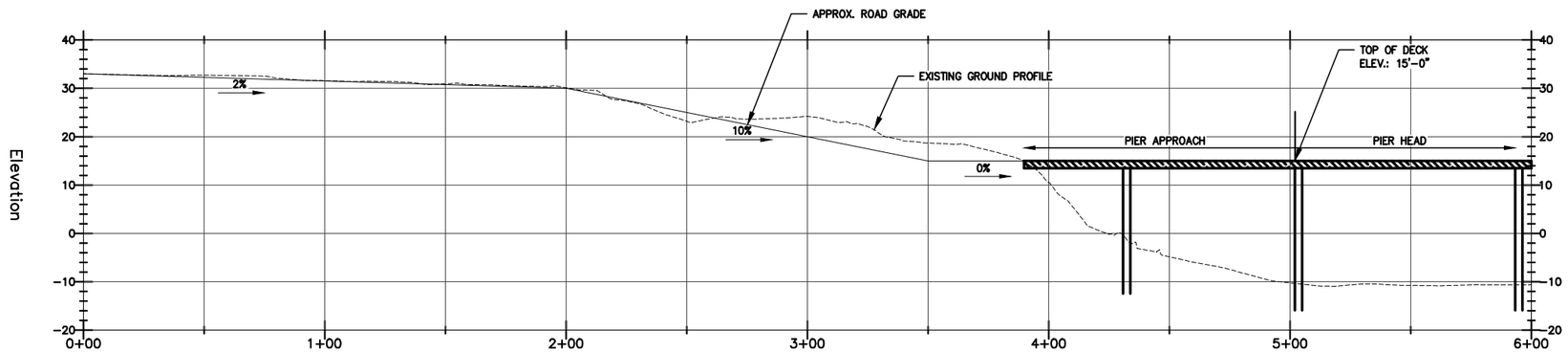

ACCESS ROAD PROFILE

0 15 30 45 90

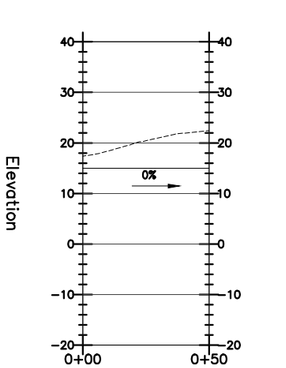

TURN AROUND PROFILE

0 15 30 45 90

BAKER DESIGN CONSULTANTS
Civil, Marine, and Structural Engineering
7 Spruce Road • Freeport • Maine • 04032 • 207-846-9724 • info@bakerdesignconsultants.com

NO.	ALTERNATIVES MEMO SUBMISSION	DATE 3-15-16	INT. BJB

STATE OF MAINE
BARNEY J. BAKER
No. 5737
LICENSED PROFESSIONAL ENGINEER

DESIGNED BY: DJB
DRAWN BY: KET
CHECKED BY: DJB
SCALE: AS SHOWN

SHEET TITLE: PIER LAYOUT 1
ACCESS ROAD PLAN AND PROFILE

PROJECT: UNIVERSITY OF NEW ENGLAND
UNE MSC WATERFRONT
BIDDEFORD, MAINE

DATE MARCH 2016
CONTRACT NO. 15-07
SHEET NO. 1 OF 4
REV. A

\\bdc-srv\projects\15\15-07 une msc waterfront\cad\15-07 une msc waterfront civil3d (alternate design review).dwg 3/22/2016

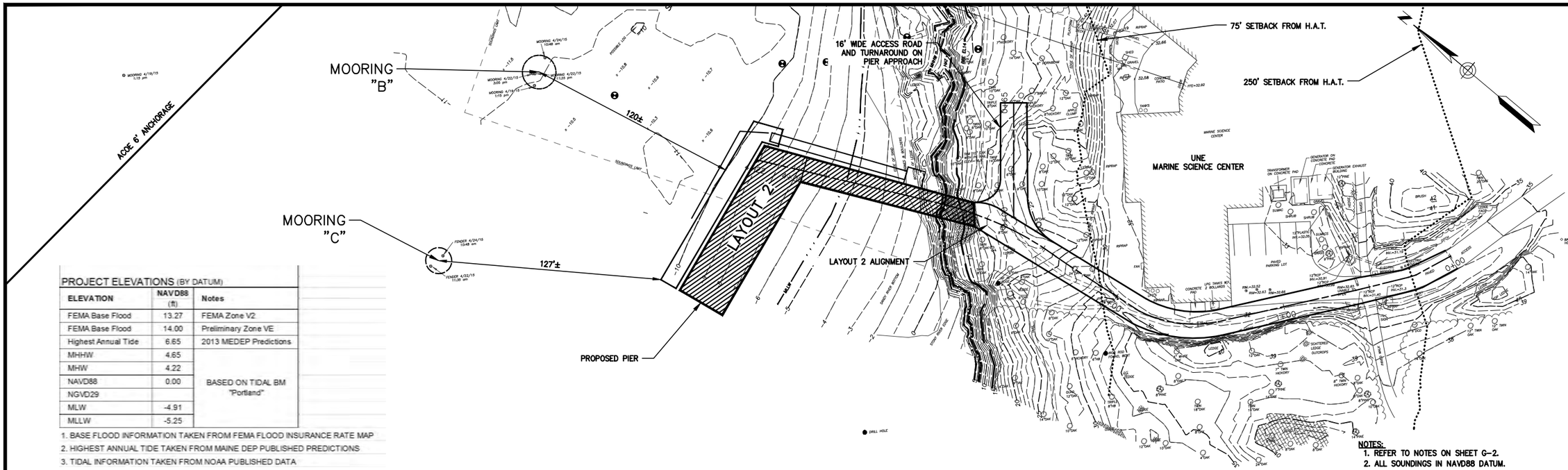

NOTES:
1. REFER TO NOTES ON SHEET G-2.
2. ALL SOUNDINGS IN NAVD88 DATUM.

PROJECT ELEVATIONS (BY DATUM)

ELEVATION	NAVD88 (ft)	Notes
FEMA Base Flood	13.27	FEMA Zone V2
FEMA Base Flood	14.00	Preliminary Zone VE
Highest Annual Tide	6.65	2013 MEDEP Predictions
MHHW	4.65	BASED ON TIDAL BM "Portland"
MHW	4.22	
NAVD88	0.00	
NGVD29		
MLW	-4.91	
MLLW	-5.25	

1. BASE FLOOD INFORMATION TAKEN FROM FEMA FLOOD INSURANCE RATE MAP
2. HIGHEST ANNUAL TIDE TAKEN FROM MAINE DEP PUBLISHED PREDICTIONS
3. TIDAL INFORMATION TAKEN FROM NOAA PUBLISHED DATA

PLAN

0 15 30 45 90

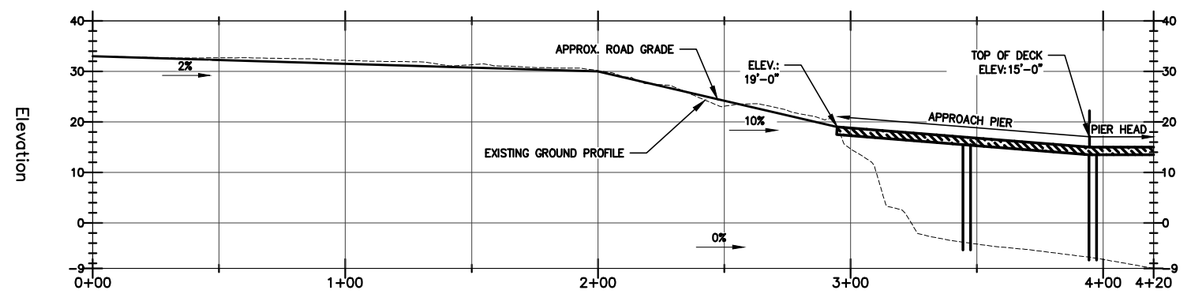

ACCESS ROAD PROFILE

0 15 30 45 90

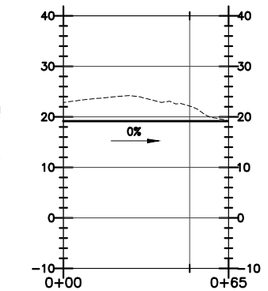

TURN AROUND PROFILE

0 15 30 45 90

BAKER DESIGN CONSULTANTS
Civil, Marine, and Structural Engineering

NO	SUBMISSION	DATE	INT
A	ALTERNATIVES MEMO	3-15-16	BJB

STATE OF MAINE
BARNEY J. BAKER
No. 5737
LICENSED PROFESSIONAL ENGINEER

DESIGNED BY: DJB
DRAWN BY: KET
CHECKED BY: DJB
SCALE: AS SHOWN

SHEET TITLE: PIER LAYOUT 2 ACCESS ROAD PLAN AND PROFILE

PROJECT: UNIVERSITY OF NEW ENGLAND UNE MSC WATERFRONT RIDDEFORD, MAINE

DATE MARCH 2016
CONTRACT NO. 15-07
SHEET NO. 2 OF 4
REV A

\\bdc-srv\projects\15\15-07 une msc waterfront\cad\15-07 une msc waterfront civil3d (alternate design review).dwg 3/22/2016

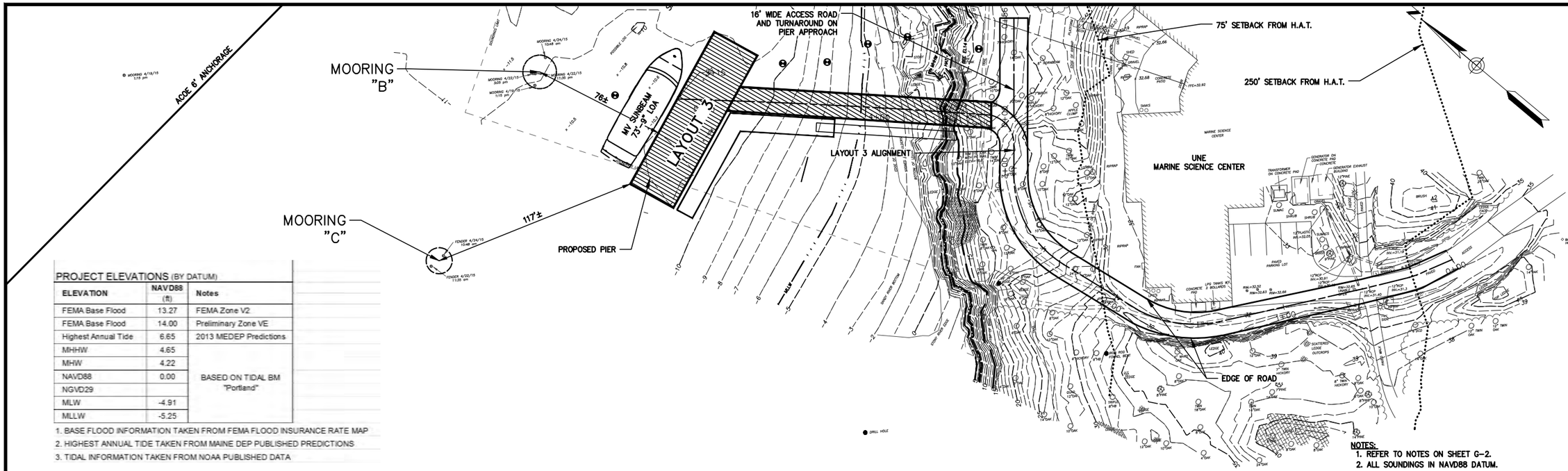

PROJECT ELEVATIONS (BY DATUM)

ELEVATION	NAVD88 (ft)	Notes
FEMA Base Flood	13.27	FEMA Zone V2
FEMA Base Flood	14.00	Preliminary Zone VE
Highest Annual Tide	6.65	2013 MEDEP Predictions
MHHW	4.65	BASED ON TIDAL BM "Portland"
MHW	4.22	
NAVD88	0.00	
NGVD29		
MLW	-4.91	
MLLW	-5.25	

1. BASE FLOOD INFORMATION TAKEN FROM FEMA FLOOD INSURANCE RATE MAP
2. HIGHEST ANNUAL TIDE TAKEN FROM MAINE DEP PUBLISHED PREDICTIONS
3. TIDAL INFORMATION TAKEN FROM NOAA PUBLISHED DATA

PLAN

0 15 30 45 90

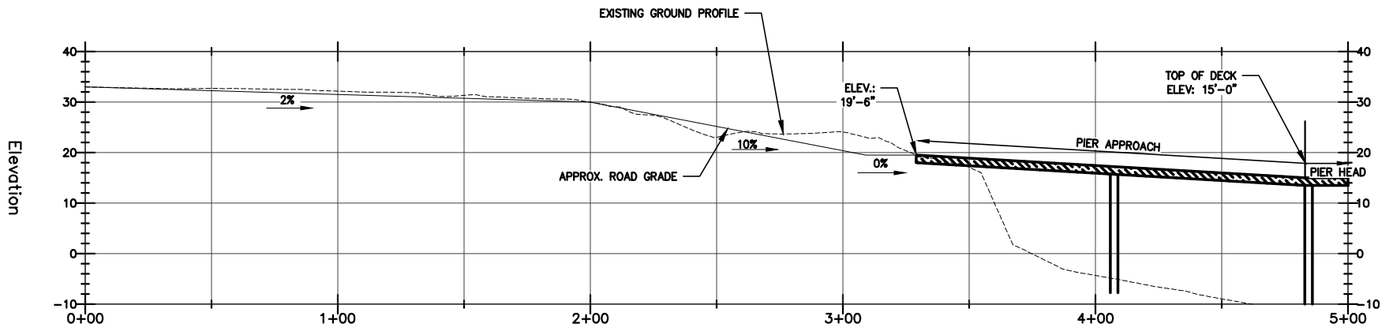

ACCESS ROAD PROFILE

0 15 30 45 90

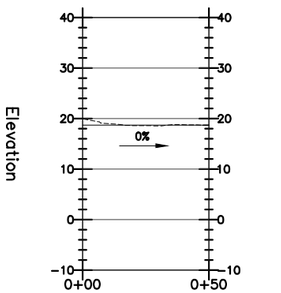

TURN AROUND PROFILE

0 15 30 45 90

BAKER DESIGN CONSULTANTS
Civil, Marine, and Structural Engineering
7 Spruce Road • Freeport • Maine • 04032 • 207-846-9724 • info@bakerdesignconsultants.com

NO.	DESCRIPTION	DATE	INT.
A	ALTERNATIVES MEMO SUBMISSION	3-15-16	BJB

BARNEY J. BAKER No. 5737 LICENSED PROFESSIONAL ENGINEER STATE OF MAINE

DESIGNED BY: DJB
DRAWN BY: KET
CHECKED BY: DJB
SCALE: AS SHOWN

SHEET TITLE: PIER SITE PLAN LAYOUT 3 SKETCH

PROJECT: UNIVERSITY OF NEW ENGLAND UNE MSC WATERFRONT BIDDEFORD, MAINE

DATE: MARCH 2016

CONTRACT NO.: 15-07

SHEET NO.: 3 OF 4

REV.: A

\\bdc-srv\projects\15\15-07 une msc waterfront\cad\15-07 une msc waterfront civil3d (alternate design review).dwg 3/22/2016

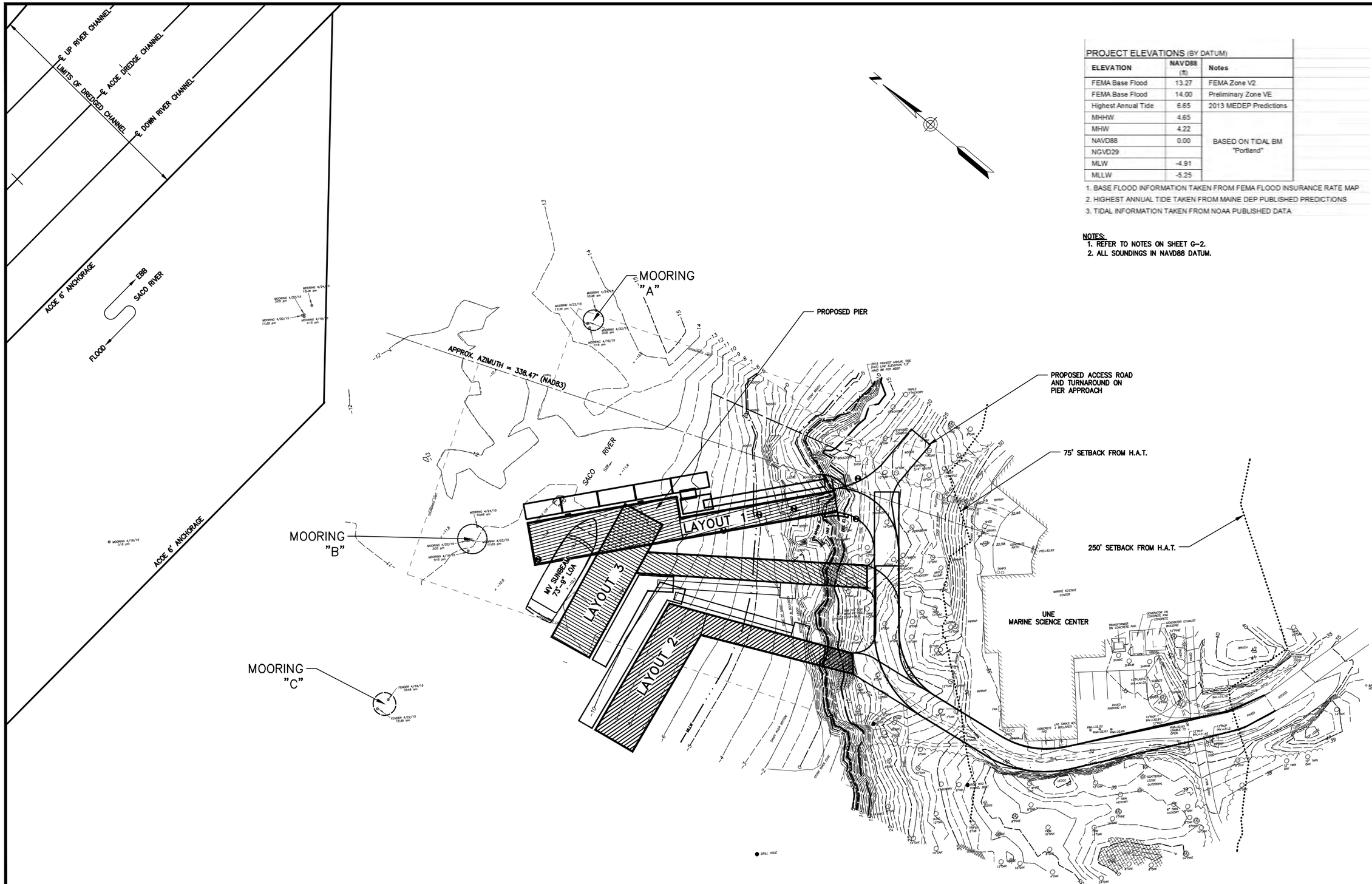

PLAN

0 15 30 45 90

PROJECT ELEVATIONS (BY DATUM)

ELEVATION	NAVD88 (ft)	Notes
FEMA Base Flood	13.27	FEMA Zone V2
FEMA Base Flood	14.00	Preliminary Zone VE
Highest Annual Tide	6.65	2013 MEDEP Predictions
MHHW	4.65	BASED ON TIDAL BM "Portland"
MHW	4.22	
NAVD88	0.00	
NGVD29		
MLW	-4.91	
MLLW	-5.25	

1. BASE FLOOD INFORMATION TAKEN FROM FEMA FLOOD INSURANCE RATE MAP
2. HIGHEST ANNUAL TIDE TAKEN FROM MAINE DEP PUBLISHED PREDICTIONS
3. TIDAL INFORMATION TAKEN FROM NOAA PUBLISHED DATA

NOTES:
1. REFER TO NOTES ON SHEET G-2.
2. ALL SOUNDINGS IN NAVD88 DATUM.

BAKER DESIGN CONSULTANTS
Civil, Marine, and Structural Engineering
7 Spruce Road • Freeport • Maine • 04032 • 207-846-9724 • info@bakerdesignconsultants.com

NO.		DATE	INT.
A	ALTERNATIVES MEMO SUBMISSION	3-15-16	BJB

STATE OF MAINE
BARNEY J. BAKER
No. 5737
LICENSED PROFESSIONAL ENGINEER

DESIGNED BY: BJB
DRAWN BY: KET
CHECKED BY: BJB
SCALE: AS SHOWN

SHEET TITLE: PIER SITE PLAN ALTERNATIVES SKETCHES

PROJECT: UNIVERSITY OF NEW ENGLAND UNE MSC WATERFRONT BIDDEFORD, MAINE

DATE FEBRUARY 2015

CONTRACT NO. 15-07

SHEET NO. 4 OF 4

REV. A

\\bdc-srv\projects\15\15-07 une msc waterfront\cad\15-07 une msc waterfront civil3d (alternate design review).dwg 3/22/2016

Attachment 9
Permits

Saco River Corridor Commission
"Communities Working Together To Protect Our Rivers"

COMMISSION ORDER
IN THE MATTER OF

UNIVERSITY OF NEW ENGLAND 11 HILLS BEACH ROAD BIDDEFORD, ME 04005 PERMIT #20-491	SACO RIVER CORRIDOR ACT FINDINGS OF FACT AND ORDER

The Saco River Corridor Commission, created by the Maine State Legislature in the Saco River Corridor Act, 38 M.R.S.A. §951, et seq., (the Act), at a meeting held on August 28th, 2024, at the Porter Town Hall in Porter, Maine, and after a review of the application and supporting documents makes the following findings of fact:

PROJECT DESCRIPTION

1. The applicant is seeking a permit to construct a research pier with associated development, including a dock and float system, shed, and access road.

SITE LOCATION/DESCRIPTION

2. The property is described in the York County Registry of Deeds, Book 1484, Page 145.
3. Location: Lot 4 (Map 52) at 11 Hills Beach Road in Biddeford, Maine.
4. The 49.9-acre lot has approximately 3,500 feet of frontage on the Saco River
5. Most project activities are proposed within 250 feet of the high water line.
    a. The proposed pier, dock and float system, and shed (located on the pier) extend below the mean high water line of the Saco River.
    b. The access road begins slightly beyond the 250-foot buffer; as it turns parallel to the river, it enters the 75-foot buffer and only extends into the 25-foot buffer, where it connects to the pier at the shoreline of the Saco River. The proposed turnaround area is located outside of the 25-foot buffer.
6. The property is located in the General Development District.
7. The 100-year floodplain is limited to the immediate shoreline.

ANALYSIS

Pier Structure

8. The applicant proposes to construct a permanent vehicle-rated pier structure extending from the shore into the Saco River. The proposed pier consists of an approximately 130-foot-long approach section and an 80-foot-long pier head section oriented parallel to the flow of the river. The proposed pier consists of a concrete superstructure on 25 concrete-filled steel pipe piles (7 of which will be socketed to ledge, with the remaining 18 to be driven to ledge), with 30 untreated timber piles for vessel berthing and floating docks, and a pile-supported gangway lifting beam

which will allow the gangway to be removed from the water temporarily. All of the piles are located below the highest annual tide line.

9. The direct impact from all piles totals 84 square feet, while the indirect impact below the highest annual tide line from the pier footprint is 3,579 square feet.
10. A concrete abutment connecting the pier to the access road is located above the highest annual tide line.

Floating Dock System & Gangway

11. The proposed floating dock system consists of one 8 x 24-foot float, one 8 x 26-foot, 10-inch float, and one 12 x 30-foot gangway landing float to provide all-tide vessel access on the west side of the pier. A 6 x 20-foot floating dock (relocated from an existing upstream location on the property) is also proposed to provide a tie-up location for the City of Biddeford Fire Boat on the east side of the pier.
12. The applicant additionally proposes an 80 x 5-foot gangway on the west side of the pier to provide ADA-compliant access to the float system.
13. All floating docks are located below the mean lower low water line and are proposed to be restrained and guided by the timber piles. The proposal will allow vessels to tie up to the pier during all tide levels.
14. The floating dock system has a total indirect impact of 848 square feet, and the gangway has a total indirect impact of 357 square feet.

Pier Buildings

15. An 8 x 10-foot shed is proposed on the east side of the pier head to provide storage for small equipment and to house utility features (electric panels).

Access Drive

16. The applicant proposes to construct a 16-foot-wide paved access road with 2-foot-wide paved shoulders extending from the road near the Marine Science Center around the east side of the Marine Science Center to the proposed pier, as well as associated grading, drainage, and stormwater management features.
17. A turnaround is proposed adjacent to the pier to allow vehicles, including fire trucks, to redirect and exit via the access road.
18. The applicant reports that vehicles will use the existing parking spaces adjacent to the Marine Science Center and that no parking is proposed adjacent to the pier.
19. The applicant states that the proposed access road will provide construction access for the project and allow more staging to take place on land, minimizing impacts to the water.
20. They report that upland work includes stormwater management features that have been designed to meet Maine DEP Chapter 500 standards.

Summary of Statement of Necessity

21. The proposed pier will provide students and researchers year-round access to the river and ocean, including a "living laboratory" located on Ram Island in Saco Bay, which is currently inaccessible during the winter and spring when the seasonal dock and float system aren't in use. The applicant states that the pier will facilitate research activities and scientific and practical exchanges with local, regional, and national marine researchers and industry partners. They note

that the marine research afforded by the proposed year-round access will allow UNE to gather data to guide Maine's response to climate change and inform data-driven decisions impacting aquaculture, fisheries, marine law and policy, and related fields.

General Background

22. The applicant reports that the area where the pier will be located is ledge, with adjacent areas consisting of undeveloped sparsely wooded areas and coastal wetlands.
23. The applicant addressed the §959-A.(A-K) standards in the project description. Where applicable, the staff has added additional details gathered from site plans. In summary:
    a. Degradation of Air and Water Quality – no anticipated impacts.
        i. Vegetation swales and two bioretention filtration ponding areas are proposed along the access road as part of the stormwater management plans.
    b. Harmful Alteration of Wetlands – no anticipated significant impacts (84 square feet of direct impact as noted above in Item 9.)
    c. Increase in Erosion and Sedimentation –
        i. The soils in the project area are not highly erodible, and the pier is located over exposed ledge and ledge with overburden.
        ii. All construction and site alterations will be done in accordance with Maine Erosion and Sedimentation Control Best Management Practices, and the site will be permanently stabilized following completion of construction.
        iii. Site plans note that the siltation boom will be installed for the duration of the construction process.
    d. Danger of Increased Flood Damage –
        i. The structure has been designed to withstand flood impacts, and its elevation takes into account rising sea levels.
    e. Obstruction of Flood Flow – no significant impacts
    f. Damage to Fish and Wildlife Habitat – no significant impacts
    g. Despoliation of Scenic Rural, and Open Space Character of the Corridor –
        i. The project's limit of disturbance encompasses 0.92 acres, with vegetation removal taking place in that envelope to provide a cleared area for the access drive and stormwater facilities.
        ii. 44 trees, including stumps, are proposed for removal within the project area.
        iii. 10 to 25 feet of clearing is proposed on average along either side of the access road. Clearing in several areas is greater to accommodate stormwater structures.
        iv. The remaining open space will be maintained, natural surroundings will be preserved, and scenic views from neighboring properties will not be obstructed.
        v. Given the water-dependent nature of the project, it will be visible from the river.
    h. Overcrowding – no significant impacts
    i. Excessive noise – no significant impacts
    j. Obstruction to Navigation –
        i. The structures will be no closer than 208 feet from the Army Corps of Engineers anchorage area.
        ii. Site plans note that construction activities will not impact the federal navigation channel at any time.

k. Interference with Educational, Scenic, Scientific, Historic, or Archaeological Values of the Areas Designated and Approved for Inclusion within the Resource Protection District
    i. The project is not located in the Resource Protection District, and the applicant states that it will enhance the area's educational value.

24. At the August 14th, 2024, Rules Committee meeting, the Committee expressed concerns about the diminution of the vegetated buffer as a result of the proposed access road construction. They noted that the removal of vegetation in that area could increase the visual impact of the existing Marine Science Center and of the access road itself. The Committee suggested that, if possible (depending on site conditions), the applicant should propose additional plantings between the access road and the shoreline.
25. In response to the Rules Committee comments:
    a. The applicant's agent submitted an updated vegetation plan, which reduced the number of trees proposed for removal by five trees, most of which were in the 25-foot buffer. The updated vegetation plan also clarified the number of trees 8 inches in diameter and greater within the 25-foot buffer that would remain post-construction.
    b. The applicant's agent stated that it was not possible to reduce the width of the access drive to less than the currently proposed 20 feet due to the National Fire Protection Association codes.
    c. The applicant's agent submitted the Stormwater Inspection and Maintenance plans for the project, which will include routine inspections of the systems post-construction to ensure proper function.
26. Staff notes from the August 23rd, 2024, site visit state:
    a. The area has many smaller shrubby vegetation. Numerous large trees are also present, and they are proposed for removal.
    b. A cleared opening would be created between the River and the Marine Science Center.
    c. The proposed clearing (for the road) extends no closer than 25 feet from the mean high water line. However, little vegetation would remain in some areas.
27. At the August 28th, 2024, Commission meeting:
    a. Public comments were heard and considered for impacts on the Commission's standards.
    b. The applicant presented an updated revegetation plan using native plantings for a 1:1 replacement ratio.
    c. The Commission questioned the status of other agencies' review of the project.
        i. The applicant's agent stated that the US Fish and Wildlife Service had advised that the work window be limited to November to April.
    d. The applicant's representatives estimated that the finished pier, including railings, would be approximately 26 feet above the water at low tide.
    e. The applicant's agent clarified that the previously proposed classroom on the pier head had been removed from the proposal.

RELEVANT STANDARDS OF THE ACT

§957-A. Resource Protection District | §957-C. General Development District | §959-A. Requirements for granting permits | §962. General Performance Standards | Chapter 102: Standard Conditions of Approval | Chapter 103: Standards to Address the Environmental Factors

BASED ON THE ABOVE FINDINGS, as determined at a duly noticed Commission Meeting, the Commission draws the following conclusions:

1. The applicant has shown the proposed design to be within the meaning of the Act.
2. The proposed use will not unreasonably involve any of the factors enumerated in §959-A(1)(A)-(K) of the Act.

THEREFORE, the Commission APPROVES the application of the University of New England, #20-491, for a permit to construct a research pier with associated development on the property owned by them, provided the activity is carried out according to the application and UPON THE FOLLOWING CONDITIONS:

1. Standard Conditions of Approval (copy attached).
2. All in-water portions of the existing research pier shall be removed.

This decision, including any of its conditions, may be appealed pursuant to 38 M.R.S. §968, except that no appeal pursuant to 38 M.R.S. §968 shall be taken from a decision of the Commission which decision was made without a public hearing until a request for reconsideration has been submitted to the Commission, and the Commission has made a final determination in the matter. Any person wishing to file an appeal or to request reconsideration must do so within 30 days of the Commission's written decision and order. Requests for reconsideration must be submitted in accordance with applicable Commission regulations. To be valid, all permits must meet all federal, state, and local ordinances and regulations.

DONE AND DATED AT CORNISH, MAINE, THIS 13TH DAY OF SEPTEMBER 2024.

SACO RIVER CORRIDOR COMMISSION

BY: Ben Pinault 9/13/24

Benjamin Pinault, Chairperson — Dated



Registry of Deeds Notarization Form
Saco River Corridor Commission Permit #20-491 University of New England

Acknowledgment

State of Maine
County of York

This record was acknowledged before me on this 13th day of September 2024 by Benjamin Pinault.

Haley L. Lachance
Signature of Notary Public

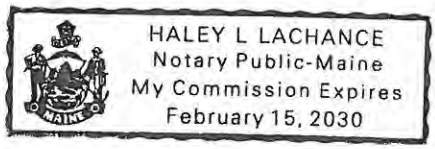

Haley Lachance
Notary Public, State of Maine
My commission expires: February 15, 2030

STATE OF MAINE
DEPARTMENT OF ENVIRONMENTAL PROTECTION
17 STATE HOUSE STATION AUGUSTA, MAINE 04333-0017

DEPARTMENT ORDER

IN THE MATTER OF

UNIVERSITY OF NEW ENGLAND	) NATURAL RESOURCES PROTECTION ACT
Biddeford, York County	) COASTAL WETLAND ALTERATION
COMMERCIAL PIER SYSTEM	) WATER QUALITY CERTIFICATION
L-18314-4P-BE-N (approval)	) FINDINGS OF FACT AND ORDER

Pursuant to the provisions of 38 M.R.S. §§ 480-A–480-JJ, Section 401 of the Clean Water Act (33 U.S.C. § 1341), and Chapters 310, 315, and 335 of Department rules, the Department of Environmental Protection (Department) has considered the application of UNIVERSITY OF NEW ENGLAND (applicant) with the supportive data, agency review comments, public comments, and other related materials on file and FINDS THE FOLLOWING FACTS:

1. PROJECT DESCRIPTION:

A. History of Project: In Department Order #L-18314-22-A-N, dated April 12, 1993, the Department granted after-the-fact approval to the University of New England for an expansion of the main campus. In Department Order #L-18314-22/31-J-M, dated December 19, 1996, the Department approved the construction of athletic facilities, a service road, a pier system, and seasonal floating dock on the Saco River. In Department Order #L-18314-22-L-A, dated May 31, 2000, the Department approved the construction of the Marine Science and Research Center and included a modification to the pier and floating dock. In Department Order #L-18314-22-AY-M/L-18314-4P-AZ-M, dated July 13, 2017, the Department approved the addition of two six-foot wide by 16-foot long seasonal floats attached seaward and perpendicular to the existing permanent floats oriented parallel to shore. A second, seasonal pier system was installed on Jordan Point in 2016. In Department Order #L-18314-22-BC-M/4P-BD-N, dated December 7, 2023, the Department approved the replacement of the second seasonal pier with a permanent pier system consisting of a six-foot wide by 63-foot long fixed pier, an existing four-foot wide by 48-foot long seasonal aluminum gangway, and an existing 10-foot long by 60-foot wide seasonal float system. The completed project resulted in 16 square feet of direct impacts and 1732 square feet of indirect impacts to the coastal wetland.

B. Summary: The applicant proposes to construct a new commercial size pier to provide all-tide access for the Marine Science Center and dock space for the City of Biddeford fireboat used for public safety. The proposed permanent pier structure will be built in three sections: section one consist of a 23-foot wide by 30-foot deck with a security gate, that connects to the second 14-foot wide by 100-foot long pier structure that seaward into the river, and the third pier section a 23-foot wide an 80-foot long pier head that will be oriented parallel to shore and a five-foot wide by 80-foot long permanent gangway perpendicular to the shore. The pier head and gangway will be flanked by four permanent floats running end to end parallel to shore; an 8-foot wide by

24-foot long float an 8-foot wide by 27-foot long float, a 12-foot wide by 30-foot long gangway landing float to provide all-tide access on the west side of the pier and a six-foot wide by 20-foot float to provide a tie-up location for the City of Biddeford's Fire Boat on the east side of the pier, both perpendicular to the shore. The pier system will be supported by 25 concrete-filled steel pipe piles and a concrete abutment which connects the pier to the proposed access road. The project as proposed will result in 84 square feet of direct impacts to the coastal wetland due to pilings, and 3,579 square feet of indirect impacts to the coastal wetland due to shading from the pier, ramp, and floats. The large size of the pier and gangway will accommodate an outdoor covered classroom, ADA-compliant access and fireboat tiedown float, and vehicular access to the pier for transportation of research and emergency equipment. Between this proposed pier and the currently existing pier system, cumulative direct impacts to the coastal wetland will total 100 square feet, and cumulative indirect impacts to the coastal wetland will total 5,311 square feet.

In addition to the proposed pier system, an upland access road connecting the existing road to the proposed pier will be constructed, including associated site grading, drainage, and stormwater management features. Work on the access road will result in approximately 475 square feet of impacts adjacent to the coastal wetland. Upland work proposed will not exceed 40,000 square feet of additional disturbed area and thus is exempt from permitting pursuant to M.R.S 38 §488(27)(A).

The proposed project is shown on a set of plans, the first of which is titled "University of New England Marine Science Center Pier", completed by GEI Consultants, Inc. and dated April 22, 2024. The project site is located at 11 Hills Beach Road in the Town of Biddeford.

C. Current Use of the Site: The project site is located on an approximately 50-acre parcel of land that is developed with various university buildings and a permanent pier system. The parcel is identified as Lot 4 on Map 52 of the City of Biddeford's tax maps.

D. Public Interest: The Department received emails from one individual between September 4 and December 11, 2024. The interested person expressed concerns related to the Town's project review process. Additionally, the interested person stated that the applicant did not consider alternative locations for the pier that would be less impactful to the resource. After reviewing the application, the Department determined that the applicant provided a sufficient alternative analysis which is further discussed in Section 4.

The interested person submitted a public hearing request on July 1, 2024. The request was reviewed by the Department and a response sent on August 20, 2024, citing that the application did not meet the Chapter 2 criteria for the Board to hold a hearing.

2. EXISTING SCENIC, AESTHETIC, RECREATIONAL OR NAVIGATIONAL USES:

The Natural Resources Protection Act (NRPA), in 38 M.R.S. § 480-D(1), requires the applicant to demonstrate that the proposed project will not unreasonably interfere with existing scenic, aesthetic, recreational and navigational uses.

In accordance with Chapter 315, *Assessing and Mitigating Impacts to Scenic and Aesthetic Uses* (06-096 C.M.R. ch. 315, effective June 29, 2003), the applicant submitted a copy of the Department's Visual Evaluation Field Survey Checklist as Appendix A to the application along with a description of the property and the proposed project. The applicant also submitted several photographs of the proposed project site and surroundings including an aerial photograph of the project site.

The proposed project is located in the Saco River, which is a scenic resource visited by the general public, in part, for the use, observation, enjoyment and appreciation of its natural and cultural visual qualities. Given the piers on abutting properties and the existing pier on the same parcel, the proposed pier will not substantially alter the visual aesthetic of the riverbank from the river. The proposed pier system is of similar size, scale, and design as nearby pier systems, including a commercial marina with slips located directly across the river and visible from the project site.

The Department staff utilized the Department's Visual Impact Assessment Matrix in its evaluation of the proposed project and the Matrix showed an acceptable potential visual impact rating for the proposed project. Based on the information submitted in the application and the visual impact rating, the Department determined that the location and scale of the proposed activity is compatible with the existing visual quality and landscape characteristics found within the viewshed of the scenic resource in the project area.

The Department of Marine Resources (DMR) reviewed the project and stated that the proposed project should not cause any significant adverse impact to navigation or recreation based on the nature of the project and its location.

The Department finds that the proposed activity will not unreasonably interfere with existing scenic, aesthetic, recreational or navigational uses of the river.

3. SOIL EROSION:

The NRPA, in 38 M.R.S. § 480-D(2), requires the applicant to demonstrate that the proposed project will not cause unreasonable erosion of soil or sediment nor unreasonably inhibit the natural transfer of soil from the terrestrial to the marine or freshwater environment.

Construction will take place from the upland and by barge. Access by land will occur on existing roads, and the proposed new road will be started early in construction to provide an additional route for construction access, material deliveries, and staging. When the site is being accessed by barge, the contractor will avoid the nearby federal navigation

channel and adjacent waterfront facilities during construction activity. Any work within the resource will be conducted in compliance with the standard November 8th-April 9th in-water work window discussed in Finding 4. A certified erosion control contractor will be on site.

The Department finds that the activity will not cause unreasonable erosion of soil or sediment nor unreasonably inhibit the natural transfer of soil from the terrestrial to the marine or freshwater environment.

4. HABITAT CONSIDERATIONS:

The NRPA, in 38 M.R.S. § 480-D(3), requires the applicant to demonstrate that the proposed project will not unreasonably harm significant wildlife habitat, freshwater wetland plant habitat, threatened or endangered plant habitat, aquatic or adjacent upland habitat, travel corridor, freshwater, estuarine or marine fisheries or other aquatic life.

The project site consists of ledge in the upper intertidal, grading to rockweed-covered rocky shore then to mixed coarse and fine sediments. Eelgrass resources were documented in the subtidal near the project area prior to 1997 but have not been mapped in recent years.

In its review, the Department of Marine Resources (DMR) stated that the project as proposed would have direct impacts to marine resources and habitat in the footprint of the pier, and recommended that if piles are driven outside of the winter work window of November 8th-April 9th. The mouth of the Saco River is utilized by diadromous fish species including Atlantic Salmon, alewife, and sea run brook trout. Atlantic and short nose sturgeon may be present year round in this area.. DMR further recommended that the applicant use a vibratory hammer or a bubble screen for noise mitigation.

The applicant concurred that work will only occur during the winter work window.

According to the Department's Geographic Information System (GIS) database there are no mapped Essential or Significant Wildlife Habitats located at the site. The Maine Department of Inland Fisheries and Wildlife (MDIFW) reviewed the proposed project and stated that the project is located adjacent to but outside of Tidal Waterfowl and Wading Bird Habitat (TWWH), a designated Significant Wildlife Habitat. MDIFW stated that minimal impacts to piping plover and Blanding's turtle habitat are anticipated and provided general recommendations including minimizing vegetation removal and soil disturbance, and that time spent in the water should be minimized to the greatest extent practicable.

The applicant responded to these comments, and agreed to minimize vegetation removal, soil disturbance, and time spent in the water.

The Department finds that the activity will not unreasonably harm any significant wildlife habitat, freshwater wetland plant habitat, threatened or endangered plant habitat, aquatic

or adjacent upland habitat, travel corridor, freshwater, estuarine or marine fisheries or other aquatic life provided in-water work is only conducted between November 8th-April 9th of any given year

5. WATER QUALITY CONSIDERATIONS:

The applicant proposes to use lumber treated with chromated copper arsenate (CCA) to construct the pier. To protect water quality, all CCA-treated lumber must be cured on dry land in a manner that exposes all surfaces to the air for 21 days prior to the start of construction.

Provided that CCA-treated lumber is cured as described above, the Department finds that the proposed project will not violate any state water quality law, including those governing the classification of the State's waters.

6. WETLANDS AND WATERBODIES PROTECTION RULES:

The proposed project will result in 84 square feet of direct impacts and 4,784 square feet of indirect impacts to the coastal wetland from the new pier system. The overall cumulative impacts from the existing pier and proposed project will be 100 square feet of direct impacts to the coastal resource and 5,311 square feet of indirect impacts to the coastal resource. Coastal wetlands are wetlands of special significance.

The *Wetlands and Waterbodies Protection Rules*, 06-096 C.M.R. ch. 310 (last amended November 11, 2018), interpret and elaborate on the Natural Resources Protection Act (NRPA) criteria for obtaining a permit. The rules guide the Department in its determination of whether a project's impacts would be unreasonable. A proposed project would generally be found to be unreasonable if it would cause a loss in wetland area, functions and values and there is a practicable alternative to the project that would be less damaging to the environment. Each application for a NRPA permit that involves a coastal wetland alteration must provide an analysis of alternatives in order to demonstrate that a practicable alternative does not exist.

A. Avoidance. An applicant must submit an analysis of whether there is a practicable alternative to the project that would be less damaging to the environment and this analysis is considered by the Department in its assessment of the reasonableness of any impacts. Additionally, for activities proposed in, on, or over wetlands of special significance the activity must be among the types listed in Chapter 310, § 5(A) or a practicable alternative less damaging to the environment is considered to exist and the impact is unreasonable. A pier is a water dependent use and its proposed construction is among the activities specifically provided for in Chapter 310, § 5(A)(1)(c). Additionally, any project related to health and safety is among the activities specifically provided for in Chapter 310, § 5(A)(1)(a).

The applicant submitted an alternatives analysis for the proposed project completed by Site Design Associates and dated June 17, 2024, with a last revision date of December

10, 2024. The purpose of the proposed project is to provide all-tide, year-round access to the resource for research and education operations associated with the Arthur P. Girard Marine Science Center (GMSC) at the University of New England. A secondary project purpose is to provide docking space for the City of Biddeford's fireboat for emergency response and safety. The applicant plans to launch a variety of research vessels from the proposed pier, including a 31-foot long research vessel and potentially larger ones in the future. The City's fireboat is 19 feet long. The applicant considered not building the new pier system and instead utilizing the existing pier on the parcel; however, this existing pier is seasonal, including the floats that are hauled out of the water each winter limiting year-round access that is required to support the a Universities' marine science programs. Additionally, the existing pier does not provide a docking area for the City of Biddeford's fireboat. Therefore, this alternative was rejected. The applicant considered a seasonal gangway and l floats; however, research and access to the water is required for emergency response from the City and for year-round, all-tide access to the resource for educational purposes. Finally, the applicant considered using public facilities including marinas, boat launches and moorings to moor and launch research vessels; however, access to the water can be time-sensitive due to course schedules or the need to access the water during certain tide cycles. With shuttling of staff, students, and equipment, and the lack of reliable parking, this alternative was rejected. The private marinas in the area have long waitlists for private slips and do not have the capacity to handle the frequent use and group size that the University requires to meet their education and research mission

B. Minimal Alteration. In support of an application and to address the analysis of the reasonableness of any impacts of a proposed project, an applicant must demonstrate that the amount of coastal wetland to be altered will be kept to the minimum amount necessary for meeting the overall purpose of the project. During the planning phase of this project, the applicant selected the pier location with the shortest length necessary to reach adequate water depths for all -tide access. In addition, the dimensions of the pier head were reduced from 28-feet wide by 100-feet long to the currently proposed 23-feet wide by 80-feet long to reduce impacts to the coastal resource.

C. Compensation. In accordance with Chapter 310, § 5(C)(6)(b), compensation may be required to achieve the goal of no net loss of coastal wetland functions and values. This project will not result in over 500 square feet of fill in the resource, which is the threshold over which compensation is generally required. Further, the proposed project will not have an adverse impact on marine resources or wildlife habitat as determined by DMR and MDIFW. For these reasons, the Department determined that compensation is not required.

The Department finds that the applicant has avoided and minimized coastal wetland impacts to the greatest extent practicable, and that the proposed project represents the least environmentally damaging alternative that meets the overall purpose of the project.

7. OTHER CONSIDERATIONS:

The Department finds, based on the design, proposed construction methods, and location, the proposed project will not inhibit the natural transfer of soil from the terrestrial to the marine environment, will not interfere with the natural flow of any surface or subsurface waters, and will not cause or increase flooding. The proposed project is not located in a coastal sand dune system, is not a crossing of an outstanding river segment, and does not involve dredge spoils disposal or the transport of dredge spoils by water.

BASED on the above findings of fact, and subject to the conditions listed below, the Department makes the following conclusions pursuant to 38 M.R.S. §§ 480-A–480-JJ and Section 401 of the Clean Water Act (33 U.S.C. § 1341):

A. The proposed activity will not unreasonably interfere with existing scenic, aesthetic, recreational, or navigational uses.

B. The proposed activity will not cause unreasonable erosion of soil or sediment.

C. The proposed activity will not unreasonably inhibit the natural transfer of soil from the terrestrial to the marine or freshwater environment.

D. The proposed activity will not unreasonably harm any significant wildlife habitat, freshwater wetland plant habitat, threatened or endangered plant habitat, aquatic or adjacent upland habitat, travel corridor, freshwater, estuarine, or marine fisheries or other aquatic life provided winter work windows are utilized as described in Finding 3.

E. The proposed activity will not unreasonably interfere with the natural flow of any surface or subsurface waters.

F. The proposed activity will not violate any state water quality law including those governing the classifications of the State's waters provided that CCA-treated lumber is cured as described in Finding 5.

G. The proposed activity will not unreasonably cause or increase the flooding of the alteration area or adjacent properties.

H. The proposed activity is not on or adjacent to a sand dune.

I. The proposed activity is not on an outstanding river segment as noted in 38 M.R.S. § 480-P.

THEREFORE, the Department APPROVES the above noted application of UNIVERSITY OF NEW ENGLAND to construct a research pier as described in Finding 1, SUBJECT TO THE ATTACHED CONDITIONS, and all applicable standards and regulations:

1. Standard Conditions of Approval, a copy attached.

2. The applicant shall take all necessary measures to ensure that their activities or those of their agents do not result in measurable erosion of soil on the site during the construction of the project covered by this approval.

3. Severability. The invalidity or unenforceability of any provision, or part thereof, of this License shall not affect the remainder of the provision or any other provisions. This License shall be construed and enforced in all respects as if such invalid or unenforceable provision or part thereof had been omitted.

4. Construction is only allowed from November 8th-April 9th of any given year.

5. All CCA-treated lumber shall be cured on dry land in a manner that exposes all surfaces to the air for 21 days prior to the start of construction.

THIS APPROVAL DOES NOT CONSTITUTE OR SUBSTITUTE FOR ANY OTHER REQUIRED STATE, FEDERAL OR LOCAL APPROVALS NOR DOES IT VERIFY COMPLIANCE WITH ANY APPLICABLE SHORELAND ZONING ORDINANCES.

DONE AND DATED IN AUGUSTA, MAINE, THIS 11TH DAY OF APRIL, 2025.

DEPARTMENT OF ENVIRONMENTAL PROTECTION

BY:_____
For: Melanie Loyzim, Commissioner

PLEASE NOTE THE ATTACHED SHEET FOR GUIDANCE ON APPEAL PROCEDURES.

PCS/L18314BEN/ATS#92653

DEPARTMENT OF THE ARMY
U.S. ARMY CORPS OF ENGINEERS, NEW ENGLAND DISTRICT
NEW ENGLAND DISTRICT OFFICE
696 VIRGINIA ROAD
CONCORD MASSACHUSETTS 01742-2751

March 28, 2025

Regulatory Division

Andrew Phillippe
University of New England
11 Hills Beach Road
Biddeford, Maine 04005
Via Email: aphilippe@une.edu

Dear Mr. Phillippe:

This letter is in response to the application you submitted to the U.S. Army Corps of Engineers (USACE), New England District on June 21, 2024 for a Department of the Army general permit verification. We have assigned this project file number NAE-2024-01628, which you should reference in all correspondence with this office.

A review of the information provided indicates the proposed work includes the construction of a permanent pier consisting of a 28-foot long by 24-foot-wide landing; a 90-foot long by 14-foot-wide approach pier; and an 80-foot long by 24-foot-long pier. Additionally, your project includes a floating dock system consisting of an 80-foot long by 5-foot-wide gangway; a 30-foot long by 12-foot wide float; a 24-foot long by 8-foot wide float; and a 27-foot long by 8-foot wide float, and a 20-foot long by 6-foot wide float. The project is located in the Saco River; at 11 Hills Beach Road, at Latitude 43.458630º and Longitude -70.389050º; in Biddeford, York County, Maine. The work is shown on the enclosed plans titled “University of New England Marine Science Center Pier”, on 38 sheets, and dated 8/14/2024.

Based on the information you have provided; we verify that the activity is authorized under General Permit *2. Structures, Floats, and Lifts* of the October 14, 2020, federal permit known as the Maine General Permits (GPs). If the extent of the project area and/or nature of the authorized impacts to waters are modified, a revised application must be submitted to this office for written approval before work is initiated. You can find a copy of these permits at:
https://www.nae.usace.army.mil/Missions/Regulatory/State-General-Permits/

Any deviation from the terms and conditions of the permit, or your submitted plans, may subject the permittee to the enforcement provisions of our regulations. Therefore, in the event changes to this project are contemplated, it is recommended you coordinate with this office prior to proceeding with the work. This office must approve any changes before you undertake them. You must perform this work in compliance

with the terms and conditions of the GPs listed above, and also in compliance with the following special conditions:

1. The permittee shall complete and return the enclosed Work-Start Notification Form to this office at least two weeks prior to the anticipated construction start date.

2. The permittee shall complete and return the enclosed Completion Certification Form to this office at least one month following the completion of the authorized work.

3. You must maintain the activity herein in good condition and in conformance with the terms and conditions of this authorization. You are not relieved of this requirement if you abandon the permitted activity, although you may make a good faith transfer to a third party in compliance with a general condition of these GPs. Should you wish to cease to maintain the authorized activities, or should you desire to abandon it without a good faith transfer, you must obtain a modification of this authorization from this office, which may require restoration of the area.

4. All construction shall be completed in accordance with the limits of construction and construction sequences detailed on the enclosed plan drawings, titled “University of New England Marine Science Center Pier,” on a total of 38 sheets, and dated 8/14/2024. If you change the plans or construction methods for work within or adjacent to the Saco River, please contact us immediately to discuss modification of this authorization. The USACE must approve any changes before you undertake them.

5. A “soft start” is required to allow animals an opportunity to leave the project vicinity before sound pressure levels increase. In addition to using a soft start at the beginning of the workday for pile driving, one must also be used at any time following cessation of pile driving for a period of 30 minutes or longer.

a) For impact pile driving: Pile driving will commence with an initial set of three strikes by the hammer at 40% energy, followed by a one-minute wait period, then two subsequent 3-strike sets at 40% energy, with one-minute waiting periods, before initiating continuous impact driving.

b) For vibratory pile installation: Pile driving will be initiated for 15 seconds at reduced energy followed by a one-minute waiting period. This sequence of 15 seconds of reduced energy driving, one-minute waiting period will be repeated two additional times, followed immediately by pile-driving at full rate and energy.

6. The work authorized herein shall not be conducted during the time of year (TOY) restriction of April 10 to November 7 in order to minimize adverse impacts to the Atlantic sturgeon, shortnose sturgeon.

This verification is valid until October 14, 2025. You must commence or be under contract to commence the work authorized herein by October 14, 2025 and complete

the work by October 14, 2026. If not, you must contact this office to determine the need for further authorization before beginning or continuing the activity. It is recommended that you contact this office before this authorization expires to discuss if permit reissuance is a possibility.

This GP verification and any associated authorizations does not preclude the necessity to obtain any other federal, state, or local permits, licenses, and/or certifications, which may be required.

If you have any questions related to this verification or have issues accessing documents referenced in this letter, please contact Jana Jacobson, Project Manager at (207) 233-2117, or by email at Jana.L.Jacobson@usace.army.mil. This agency continually strives to improve our customer service. To better serve you, please complete the Customer Service Survey located at: https://regulatory.ops.usace.army.mil/customer-service-survey/.

Sincerely,

Jon T. Coleman
Team Leader
Technical Regional Execution Center
North Atlantic Division

Enclosures

Cc (w/enclosures):
Tom Saucier, Site Design Associates (via tsaucier@sitedesignassociates.biz)

Attachment 10
MHPC Clearance

MAINE HISTORIC PRESERVATION COMMISSION
55 CAPITOL STREET
65 STATE HOUSE STATION
AUGUSTA, MAINE
04333

JANET T. MILLS
GOVERNOR

KIRK F. MOHNEY
DIRECTOR

May 15, 2023

Mr. Tom Saucier, P.E.
Site Design Associates
23 Whitney Way
Topsham, Maine 04086

Project: MHPC# 0500-23 University of New England; 11 Hills Beach Road
Permanent Pier and Float System

Town: Biddeford, ME

Dear Mr. Saucier:

In response to your recent request, I have reviewed the information received April 13, 2023 to initiate consultation on the above referenced projects in accordance with Section 106 of the National Historic Preservation Act of 1966, as amended (NHPA).

Dr. Arthur Spiess of my staff has carefully reviewed our February 7, 2000 letter concerning areas of archaeological site significance on the UNE campus, and the Phase III report that formed the background of these recommendations. We note that some of the areas of the proposed access road and the head of the pier fall outside of the areas found not to be contributing to the overall significance of the archaeological site(s) on the UNE campus (specifically areas 99.1, 99.2 and 99.8. Moreover, the intensity of previous archaeological testing along the now-proposed access road (especially within area 99.1).

Based on the information submitted, I have concluded that the proposed work will have **no adverse effect** upon historic properties.

However, our finding is *conditional* upon the following:

1) We recommend that one or more archaeologists monitor the initial clearing of soil from the route of the access road and be allowed enough time to recover information from any subsoil features that are present. It would be most important to monitor the access road from the curve in the road to be located just east of the north wall of the marine science center to the head of the proposed pier.

Please contact Megan M. Rideout at (207) 287-2992 or megan.m.rideout@maine.gov if we can be of further assistance in this matter.

Sincerely,

Kirk F. Mohney

Kirk F. Mohney
State Historic Preservation Officer

PHONE: (207) 287-2132 FAX: (207) 287-2335

Attachment 11
Notice to Proceed
With External Reviews

City of Biddeford, Maine

The Office of
City Manager
James A. Bennett
Email: james.bennett@biddefordmaine.org

August 19, 2024

University of New England
11 Hills Beach Road
Biddeford, Maine 04005

Attention: Mr. Alan Thibeault, VP of University Operations

RE: Notice to Proceed with External Reviews

Dear Mr. Thibeault,

On August 9, 2024, I received written clarification from Mr. Wayne Duffett, PE of TECAssociates that UNE's proposed Research Pier and Float System has complied with City Code 74-35 subsections (c) 1-10. Those sections are as follows:

(1) A formal boundary survey that has been documented at the Registry of Deeds.
(2) A copy of the boundary survey showing the littoral zone, established by extending property lines seaward.
(3) A location map from a portion of a USGS topographic map or coastal chart.
(4) Distance to navigable channels or any federal navigation project.
(5) Mean high- and low-water boundary.
(6) A plan view on the drawing(s) that shows the location and dimensions of the applicant's structure(s) in relation to the applicant's property lines.
(7) A typical cross section/side view of the applicant's structures on the drawing(s).
(8) Evidence that owners of abutting properties have been notified of the applicant's intended project.
(9) Evidence that the 1) Maine Historic Preservation Commission, 2) Aroostook Band of Micmac, 3) Passamaquoddy Tribe of Indians: Pleasant Point; Indian Township, 4) Houlton Band of Maliseet Indians, and 5) Penobscot Indian Nation have been notified of the applicant's intended project.
(10) Completed applications to the Army Corps of Engineers, Department of Environmental Protection and Biddeford Code Enforcement. A regulatory permit from the Saco River Corridor Commission may also be required in some instances.

Based on this information and in harmony with my earlier communications, please consider this as formal notification from the City of Biddeford that the application has been found in compliance with

the above mention City Code. That finding allows the application to proceed in the next steps of the review process; namely formal review by all agencies except those that are part of the City of Biddeford. After each and all of those processes are complete, the City will move forward with the final review(s) by agents and Committees of the City.

While I don't believe it is necessary, let me empathically state that this communication does not in any form, imply that the City has in any way made a determination that the location submitted has been approved. Said approval will considered after completion of all process and in compliance with applicable laws, regulations. This includes all local ordinances.

Please feel free to reach out to me if you have any questions

Sincerely,

James A. Bennett
City Manager

CC: Biddeford Mayor and City Council

Attachment 12
Photo of shed



Attachment 13
Light Fixture Information

BEACON
design . performance . technology

URBAN SERIES

URBAN LUMINAIRE

DATE: | LOCATION:

TYPE: | PROJECT:

CATALOG #:

FEATURES

- Decorative transitional style lighting fixture series is suitable for walkway lighting and wall mounting
- Two unique shade and style options
- LED turtle-friendly option available
- Integral Surge and Thermal Protection



Shown with arm

C US

*3000K and warmer CCTs only

CONTROL TECHNOLOGY

energeni

SPECIFICATIONS

CONSTRUCTION

- The drivers shall be located in the top cast housing and shall be accessible without tools by hinging the lower shade assembly. The driver and all electrical components shall be on a tray
- The lower shade shall be made from a one-piece aluminum spinning
- The housing is designed for LED thermal management without the use of metallic screens, cages, or fans. The top casting shall be able to be pendent mounted in place with a stainless steel safety pin and then permanently held in place with four stainless steel bolts

ELECTRICAL

- 100V through 277V, 50 Hz to 60 Hz (UNV), or 347V or 480V input
- Power factor is ≥0.90 at full load
- Dimming drivers are standard with connections for external dimming equipment available upon request
- Component-to-component wiring within the luminaire may carry no more than 80% of rated load and is listed by UL for use at 600VAC at 50°C or higher
- Plug disconnects are listed by UL for use at 600 VAC, 13A or higher. 13A rating applies to primary (AC) side only
- Fixture electrical compartment shall contain all LED driver components
- Button photocell available
- Ambient operating temperature -40°C to 40°C

ELECTRICAL (CONTINUED)

- Surge protection - 20KA
- Lifeshield™ Circuit - protects luminaire from excessive temperature. The device shall activate at a specific, factory-preset temperature, and progressively reduce power over a finite temperature range. A luminaire equipped with the device may be reliably operated in any ambient temperature up to 55°C (131°F). Operation shall be smooth and undetectable to the eye. Thermal circuit is designed to “fail on”, allowing the luminaire to revert to full power in the event of an interruption of its power supply, or faulty wiring connection to the drivers. The device shall be able to co-exist with other 0-10V control devices (occupancy sensors, external dimmers, etc.)

CONTROLS

- Available with Energeni for optional set dimming, timed dimming with simple delay, or timed dimming based on time of night visit

FINISH

- IFS polyester powder-coat electrostatically applied and thermocured
- IFS finish consists of a five stage pretreatment regimen with a polymer primer sealer and top coated with a thermoset super TGIC polyester powder coat finish
- The finish meets the AAMA 605.2 performance specification which includes passing a 3000 hour salt spray test for corrosion resistance and resists cracking or loss of adhesion per ASTM D522 and resists surface impacts of up to 160 inch-pounds

CERTIFICATIONS

- NRTL Certified, UL8750, UL 1598 and CSA22.2#250. 13-14 for wet locations
- IDA approved
- This product is approved by the Florida Fish and Wildlife Conservation Commission. Separate spec available.

WARRANTY

- 5 year warranty

KEY DATA	
Lumen Range	3,300–13,000
Wattage Range	27.8–137.5
Efficacy Range (LPW)	61–87

© 2024 Current Lighting Solutions, LLC. All rights reserved. Information and specifications subject to change without notice. All values are design or typical values when measured under laboratory conditions.

BEACON
design . performance . technology

URBAN SERIES
URBAN LUMINAIRE

DATE: LOCATION:
TYPE: PROJECT:
CATALOG #:

ORDERING GUIDE

Example: URB–CAP-21–36L-120–5K7–UNV–4–NRNW–BLT

CATALOG #

Model	Lens Option	Engine–Watts	CCT/CRI[4]	Voltage	Optics[2]	Electrical Options
URB Urban	**CAP-21** 21" Capitol	**18L-25** 25W, LED array	**3K7** 3000K, 70 CRI	**UNV** 120-277V	**FR** Type I	**PCU** Button Photocell, Universal
	MRDS-21 21" Miramar deep shade	**18L-39** 39W, LED array	**4K7** 4000K, 70 CRI	**347** 347V	**2** Type II	
	MAR-21 21" Maritas	**18L-50** 50W, LED array	**5K7** 5000K, 70 CRI	**480** 480V	**3** Type III	
	CAP-26 26" Capitol	**18L-70** 70W, LED array	**3K8** 3000K, 80 CRI		**4F** Type IV forward	
	MRSS-26 26" Miramar shallow shade	**18L-90** 90W, LED array	**4K8** 4000K, 80 CRI		**4W** Type IV wide	
	MRDS-26 26" Miramar deep shade	**18L-110** 110W, LED array	**5K8** 5000K, 80 CRI		**5QN** Type V square narrow	
	MAR-26 26" Maritas	**36L-120** 120W, LED array	**AM** Monochromatic Amber, 595nm		**5QW** Type V square wide	
		36L-135 135W, LED array			**5RW** Type V rectangular wide	
		36L-155 155W, LED array			**5W** Type V round wide	
		36L-175 175W, LED array			**BC** Backshield (available for FR, 2, 3, 4, 4W Opctics)	

Control Options	Mounting Style	Style	Finish	Options
GENI-XX Energeni[3]	**PM** Pendant mount	**NRNW** No rings	**BLT** Black Matte Textured	**BC** Backlight Control
XX - Please specify	**SM** Side mount	**3RNW** Three rings	**BLS** Black Gloss Smooth	
	YM3 Yoke mount, 3" OD		**DBT** Dark Bronze Matte Textured	
	YM4 Yoke mount, 4" OD		**DBS** Dark Bronze Gloss Smooth	
	YM5 Yoke mount, 5" OD		**GTT** Graphite Matte Textured	
			LGS Light Grey Gloss Smooth	
			PSS Platinum Silver Smooth	
			WHT White Matte Textured	
			WHS White Gloss Smooth	
			VGT Verde Green Textured	
			Color Option	
			CC Custom Color	

Notes:
1 26" only
2 To rotate optics left or right 90 degrees, specify L or R after the optical distribution example: 4L
3 When ordering Energeni, specify the routine setting code (Example GENI-04). See Energeni brochure and Energeni instructions for setting table and options. Not available with sensor options
4 This product is approved by the Florida Fish and Wildlife Conservation Commission. Separate spec available on our website.

© 2024 Current Lighting Solutions, LLC. All rights reserved. Information and specifications subject to change without notice. All values are design or typical values when measured under laboratory conditions.

BEACON
design . performance . technology

URBAN SERIES

URBAN LUMINAIRE

PENDANT MOUNT



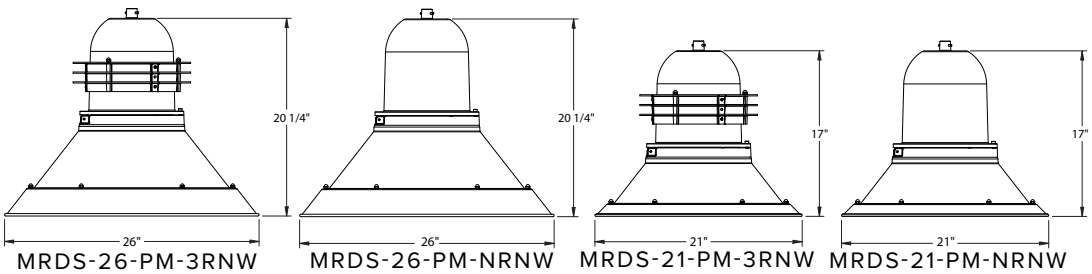

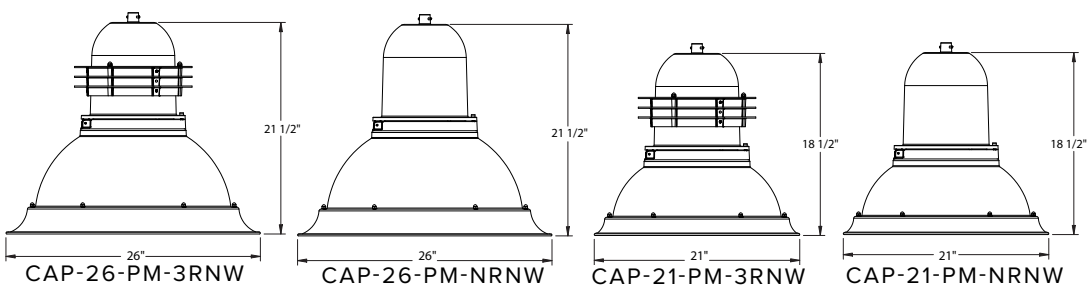

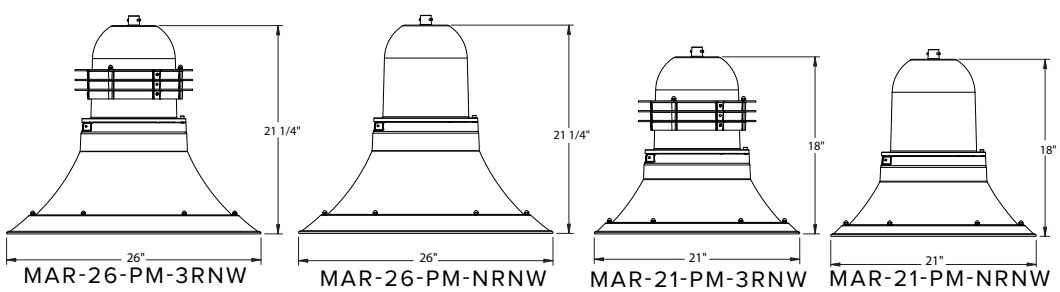

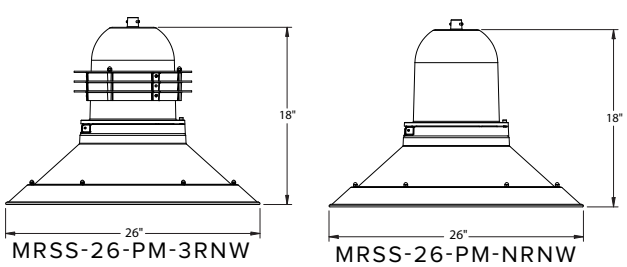

© 2024 Current Lighting Solutions, LLC. All rights reserved. Information and specifications subject to change without notice. All values are design or typical values when measured under laboratory conditions.

BEACON
design . performance . technology

URBAN SERIES

URBAN LUMINAIRE

SIDE MOUNT

* Arms ordered separately, arms mount over an open top pole, they do not mount to a tenon.



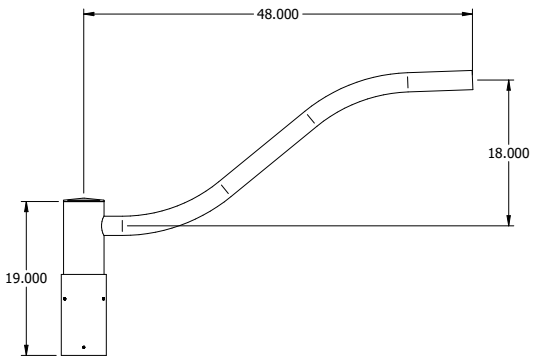

AA-10 COBRA

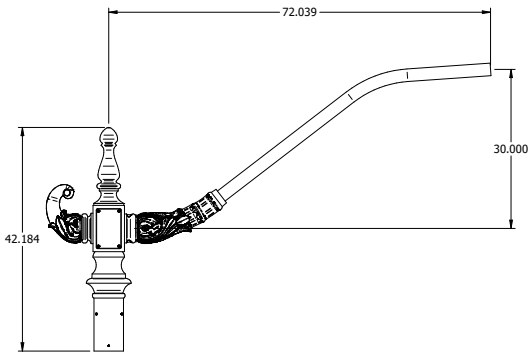

AA-10B COBRA BALBOA

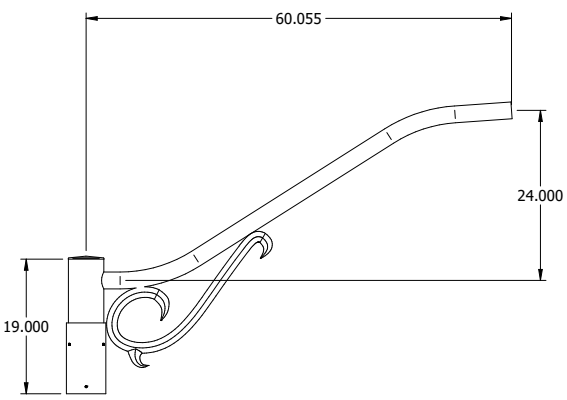

AA-10S COBRA SCROLL

© 2024 Current Lighting Solutions, LLC. All rights reserved. Information and specifications subject to change without notice. All values are design or typical values when measured under laboratory conditions.

BEACON
design . performance . technology

URBAN SERIES

URBAN LUMINAIRE

PENDANT MOUNT

* Arms ordered separately, arms mount over an open top pole, they do not mount to a tenon.



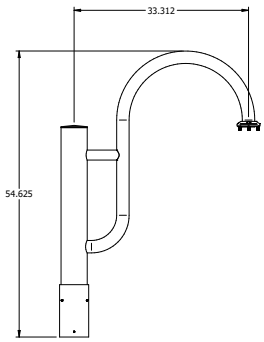

AA-41 RAILROAD STRAP

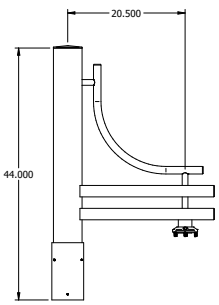

AA-10 SMALL PIERWALK

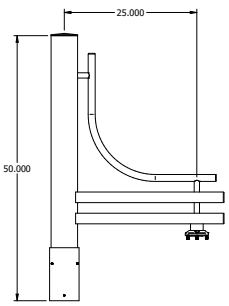

AA-38 LARGE PIERWALK

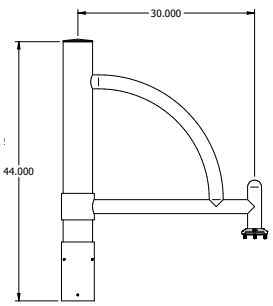

AA-49 RADIUS

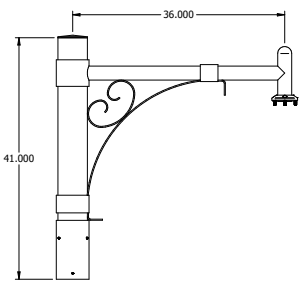

AA-27 STRATFORD

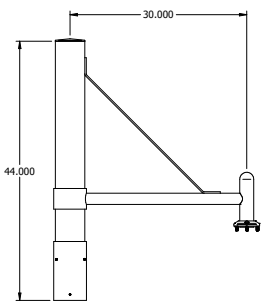

AA-44 STRUT

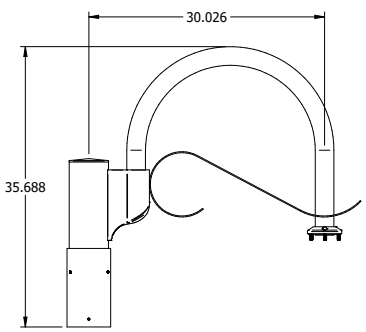

AA-45 TWIN EAGLES

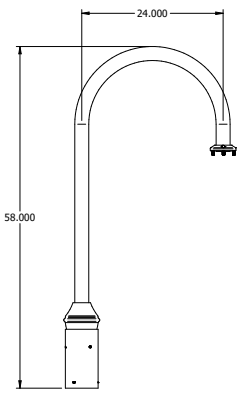

AA-39 RAILROAD

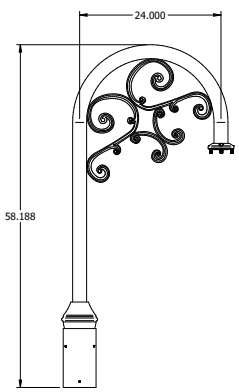

AA-39S RAILROAD SCROLL

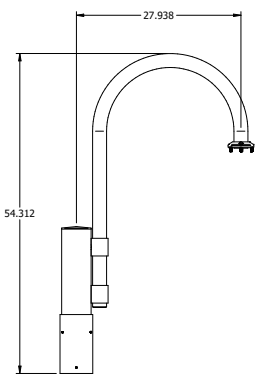

AA-42 RAILROAD SCS

© 2024 Current Lighting Solutions, LLC. All rights reserved. Information and specifications subject to change without notice. All values are design or typical values when measured under laboratory conditions.

BEACON
design . performance . technology

URBAN SERIES
URBAN LUMINAIRE

DELIVERED LUMENS

# of LEDs	NOMINAL WATTAGE (W)	SYSTEM WATTS (W)	DISTRIBUTION TYPE	5K7 (5000K nominal, 70 CRI)					4K7 (4000K nominal, 70 CRI)					3K7 (3000K nominal, 70 CRI)				
				LUMENS	LPW	B	U	G	LUMENS	LPW	B	U	G	LUMENS	LPW	B	U	G
18	25	27.8	FR	3428	123	0	0	0	3496	126	0	0	0	3233	116	0	0	0
			2	3236	117	1	0	1	3300	119	1	0	1	3052	110	1	0	1
			3	3164	114	1	0	1	3226	116	1	0	1	2983	107	1	0	1
			4F	3257	117	0	0	1	3321	120	0	0	1	3071	110	0	0	1
			4W	3114	112	1	0	1	3176	114	1	0	1	2937	106	1	0	1
			5QM	3398	122	2	0	0	3465	125	2	0	0	3204	115	2	0	0
			5QN	3431	124	2	0	0	3499	126	2	0	0	3236	116	2	0	0
			5QW	2937	106	2	0	1	2995	108	2	0	1	2770	100	0	0	0
			5RW	3150	113	2	0	2	3212	116	2	0	2	2970	107	2	0	2
			5W	3207	116	2	0	1	3271	118	2	0	1	3024	109	2	0	1
	39	45.1	FR	4977	110	0	0	0	5076	113	0	0	0	4694	104	0	0	0
			2	4699	104	1	0	1	4791	106	1	0	1	4431	98	1	0	1
			3	4593	102	1	0	1	4684	104	1	0	1	4332	96	1	0	1
			4F	4729	105	0	0	1	4822	107	0	0	1	4459	99	0	0	1
			4W	4522	100	1	0	1	4611	102	1	0	1	4264	95	1	0	1
			5QM	4934	110	2	0	0	5032	112	2	0	0	4653	103	2	0	0
			5QN	4982	111	2	0	0	5081	113	2	0	0	4698	104	2	0	0
			5QW	4522	100	3	0	1	4611	102	3	0	1	4264	95	3	0	1
			5RW	4573	101	2	0	2	4664	104	2	0	2	4313	96	2	0	2
			5W	4657	103	2	0	1	4749	105	2	0	1	4391	97	2	0	1
	50	57.5	FR	6019	105	0	0	0	6138	107	0	0	0	5676	99	0	0	0
			2	5682	99	1	0	1	5794	101	1	0	1	5358	93	1	0	1
			3	5555	97	1	0	1	5665	99	1	0	1	5238	91	1	0	1
			4F	5718	100	0	0	1	5831	101	0	0	1	5392	94	0	0	1
			4W	5468	95	1	0	1	5576	97	1	0	1	5156	90	1	0	1
			5QM	5967	104	2	0	0	6085	106	2	0	0	5627	98	2	0	0
			5QN	6025	105	2	0	0	6144	107	2	0	0	5682	99	2	0	0
			5QW	5468	95	3	0	1	5576	97	3	0	1	5156	90	3	0	1
			5RW	5531	96	2	0	2	5640	98	2	0	2	5215	91	2	0	2
			5W	5632	98	2	0	1	5743	100	2	0	1	5311	92	2	0	1
	70	62.4	FR	6650	107	0	0	0	6781	109	0	0	0	6271	100	0	0	0
			2	6277	101	1	0	1	6401	103	1	0	1	5919	95	1	0	1
			3	6137	98	1	0	1	6258	100	1	0	1	5787	93	1	0	1
			4F	6317	101	0	0	1	6442	103	0	0	1	5957	95	0	0	1
			4W	6041	97	1	0	1	6160	99	1	0	1	5696	91	1	0	1
			5QM	6592	106	2	0	0	6722	108	2	0	0	6216	100	2	0	0
			5QN	6656	107	2	0	0	6788	109	2	0	0	6277	101	2	0	0
			5QW	6041	97	3	0	1	6160	99	3	0	1	5696	91	3	0	1
			5RW	6110	98	2	0	2	6231	100	2	0	2	5762	92	2	0	2
			5W	6221	100	2	0	1	6344	102	2	0	1	5867	94	2	0	1

DELIVERED LUMENS CHART CONTINUED ONTO NEXT PAGE

Notes:

1 Lumen values are from photometric tests performed in accordance with IESNA LM-79-08. Data is considered to be representative of the configurations shown. Actual performance may differ as a result of end-user environment and application.

* Available in the 26" Urban only

© 2024 Current Lighting Solutions, LLC. All rights reserved. Information and specifications subject to change without notice. All values are design or typical values when measured under laboratory conditions.

BEACON
design . performance . technology

URBAN SERIES
URBAN LUMINAIRE

DELIVERED LUMENS (CONTINUED)

				5K7 (5000K nominal, 70 CRI)					4K7 (4000K nominal, 70 CRI)					3K7 (3000K nominal, 70 CRI)				
# of LEDs	NOMINAL WATTAGE (W)	SYSTEM WATTS (W)	DISTRIBUTION TYPE	LUMENS	LPW	B	U	G	LUMENS	LPW	B	U	G	LUMENS	LPW	B	U	G
18	90	82.3	FR	7681	93	0	0	0	7833	95	0	0	0	7244	88	0	0	0
			2	7251	88	1	0	1	7394	90	1	0	1	6838	83	1	0	1
			3	7089	86	1	0	1	7229	88	1	0	1	6685	81	1	0	1
			4F	7297	89	0	0	1	7442	90	0	0	1	6882	84	0	0	1
			4W	6978	85	1	0	1	7116	86	1	0	1	6580	80	1	0	1
			5QM	7614	93	2	0	0	7765	94	2	0	0	7180	87	2	0	0
			5QN	7689	93	2	0	0	7841	95	2	0	0	7251	88	2	0	0
			5QW	6978	85	3	0	1	7116	86	3	0	1	6580	80	3	0	1
			5RW	7058	86	2	0	2	7197	87	2	0	2	6656	81	2	0	2
			5W	7187	87	2	0	1	7329	89	2	0	1	6777	82	2	0	1
	110	98.7	FR	8346	85	0	0	0	8511	86	0	0	0	7870	80	0	0	0
			2	7878	80	1	0	1	8034	81	1	0	1	7429	75	1	0	1
			3	7702	78	1	0	1	7854	80	1	0	1	7263	74	1	0	1
			4F	7929	80	0	0	1	8085	82	0	0	1	7477	76	0	0	1
			4W	7582	77	1	0	1	7731	78	1	0	1	7150	72	1	0	1
			5QM	8273	84	2	0	0	8437	86	2	0	0	7802	79	2	0	0
			5QN	8354	85	2	0	0	8519	86	2	0	0	7878	80	2	0	0
			5QW	7582	77	3	0	2	7731	78	3	0	2	7150	72	3	0	2
			5RW	7668	78	2	0	2	7820	79	2	0	2	7231	73	2	0	2
			5W	7808	79	2	0	1	7963	81	2	0	1	7363	75	2	0	1
36	120	124.9	FR	12463	100	0	0	0	12709	102	0	0	0	11752	94	0	0	0
			2	11765	94	1	0	1	11997	96	1	0	1	11094	89	1	0	1
			3	11501	92	1	0	1	11728	94	1	0	1	10846	87	1	0	1
			4F	11840	95	0	0	1	12074	97	0	0	1	11165	89	0	0	1
			4W	11321	91	1	0	1	11545	92	1	0	1	10676	85	1	0	1
			5QM	12354	99	2	0	0	12598	101	2	0	0	11650	93	2	0	0
			5QN	12475	100	2	0	0	12722	102	2	0	0	11764	94	2	0	0
			5QW	11321	91	3	0	2	11545	92	3	0	2	10676	85	3	0	2
			5RW	11451	92	2	0	2	11677	93	2	0	2	10798	86	2	0	2
			5W	11660	93	2	0	1	11890	95	2	0	1	10995	88	2	0	1
	135	137.5	FR	13255	96	0	0	0	13517	98	0	0	0	12500	91	0	0	0
			2	12513	91	1	0	1	12760	93	1	0	1	11799	86	1	0	1
			3	12232	89	1	0	1	12474	91	1	0	1	11535	84	1	0	1
			4F	12593	92	0	0	1	12841	93	0	0	1	11875	86	0	0	1
			4W	12041	88	1	0	1	12279	89	1	0	1	11355	83	1	0	1
			5QM	13140	96	2	0	0	13399	97	2	0	0	12391	90	2	0	0
			5QN	13268	97	2	0	0	13531	98	2	0	0	12512	91	2	0	0
			5QW	12041	88	3	0	2	12279	89	3	0	2	11355	83	3	0	2
			5RW	12179	89	2	0	2	12420	90	2	0	2	11485	84	2	0	2
			5W	12401	90	2	0	1	12646	92	2	0	1	11695	85	2	0	1
			TCR	13051	95	0	0	0	13308	97	0	0	0	12307	90	0	0	0

DELIVERED LUMENS CHART CONTINUED ONTO NEXT PAGE

Notes:

1 Lumen values are from photometric tests performed in accordance with IESNA LM-79-08. Data is considered to be representative of the configurations shown. Actual performance may differ as a result of end-user environment and application.

* Available in the 26" Urban only

© 2024 Current Lighting Solutions, LLC. All rights reserved. Information and specifications subject to change without notice. All values are design or typical values when measured under laboratory conditions.

BEACON
design . performance . technology

URBAN SERIES
URBAN LUMINAIRE

DELIVERED LUMENS (CONTINUED)

				5K7 (5000K nominal, 70 CRI)					4K7 (4000K nominal, 70 CRI)					3K7 (3000K nominal, 70 CRI)				
# of LEDs	NOMINAL WATTAGE (W)	SYSTEM WATTS (W)	DISTRIBUTION TYPE	LUMENS	LPW	B	U	G	LUMENS	LPW	B	U	G	LUMENS	LPW	B	U	G
36	155	150.6	FR	13992	93	0	0	0	14268	95	0	0	0	13194	88	0	0	0
			2	13208	88	1	0	1	13469	89	1	0	1	12455	83	1	0	1
			3	12912	86	1	0	1	13167	87	1	0	1	12176	81	1	0	1
			4F	13293	88	0	0	1	13555	90	0	0	1	12535	83	0	0	1
			4W	12711	84	1	0	1	12962	86	1	0	1	11986	80	1	0	1
			5QM	13870	92	2	0	0	14144	94	2	0	0	13079	87	2	0	0
			5QN	14006	93	2	0	0	14283	95	2	0	0	13208	88	2	0	0
			5QW	12711	84	3	0	2	12962	86	3	0	2	11986	80	3	0	2
			5RW	12856	85	2	0	2	13110	87	2	0	2	12123	80	2	0	2
			5W	13091	87	2	0	1	13349	89	2	0	1	12345	82	2	0	1
	175	167.3	FR	14784	88	0	0	0	15076	90	0	0	0	13942	83	0	0	0
			2	13956	83	1	0	1	14232	85	1	0	1	13161	79	1	0	1
			3	13644	82	1	0	1	13913	83	1	0	1	12866	77	1	0	1
			4F	14045	84	0	0	1	14323	86	0	0	1	13245	79	0	0	1
			4W	13430	80	1	0	1	13696	82	1	0	1	12665	76	1	0	1
			5QM	14655	88	2	0	0	14945	89	2	0	0	13820	83	2	0	0
			5QN	14799	88	2	0	0	15091	90	2	0	0	13956	83	2	0	0
			5QW	13430	80	3	0	2	13696	82	3	0	2	12665	76	3	0	2
			5RW	13584	81	2	0	2	13852	83	2	0	2	12810	77	2	0	2
			5W	13832	83	2	0	1	14105	84	2	0	1	13044	78	2	0	1

Notes:
1 Lumen values are from photometric tests performed in accordance with IESNA LM-79-08. Data is considered to be representative of the configurations shown. Actual performance may differ as a result of end-user environment and application.
* Available in the 26" Urban only

ELECTRICAL DATA

# LED's	Nominal Wattage (W)	Input Voltage (Volts)	Oper. Current (Amps)	System Power (W)
18	25	120	0.23	27.8
		277	0.10	
		347	0.08	
		480	0.06	
	39	120	0.38	45.1
		277	0.16	
		347	0.13	
		480	0.09	
	50	120	0.48	57.7
		277	0.21	
		347	0.17	
		480	0.12	
	70	120	0.52	62.4
		277	0.23	
		347	0.18	
		480	0.13	
	90	120	0.69	82.3
		277	0.30	
		347	0.24	
		480	0.17	
	110	120	0.82	98.7
		277	0.36	
		347	0.28	
		480	0.21	

# LED's	Nominal Wattage (W)	Input Voltage (Volts)	Oper. Current (Amps)	System Power (W)
36	120	120	1.04	124.9
		277	0.45	
		347	0.36	
		480	0.26	
	135	120	1.15	137.5
		277	0.50	
		347	0.40	
		480	0.29	
	155	120	1.26	150.6
		277	0.54	
		347	0.43	
		480	0.31	
	175	120	1.39	167.3
		277	0.60	
		347	0.48	
		480	0.35	

© 2024 Current Lighting Solutions, LLC. All rights reserved. Information and specifications subject to change without notice. All values are design or typical values when measured under laboratory conditions.

BEACON
design . performance . technology

URBAN SERIES

URBAN LUMINAIRE

PROJECTED LUMEN MAINTENANCE

Ambient Temperature	OPERATING HOURS					
	0	25,000	*TM-21-11 36,000	50,000	100,000	L70 (Hours)
25°C / 77°F	1.00	0.97	0.96	0.95	0.91	408,000
40°C / 104°F	0.99	0.96	0.95	0.94	0.89	356,000

Notes:

* Projected per IESNA TM-21-11. Data references the extrapolated performance projections for thebase model in a 40°C ambient, based on 10,000 hours of LED testing per IESNA LM-80-08.

LUMINAIRE AMBIENT TEMPERATURE FACTOR (LATF)

Ambient Temperature		Lumen Multiplier
0°C	32°F	1.03
10°C	50°F	1.01
20°C	68°F	1.00
25°C	77°F	1.00
30°C	86°F	0.99
40°C	104°F	0.98
50°C	122°F	0.97

Use these factors to determine relative lumen output for average ambient temperatures from 0-40°C (32-104°F).

EPA

EPA: X.XX sqft		PM	SM	YM
CAP	21	1.04	1.14	1.39
	26	1.39	1.49	1.79
MAR	21	1.00	1.10	1.35
	26	1.25	1.35	1.65
MRDS	21	1.00	1.10	1.35
	26	1.25	1.35	1.65
MRSS	26	1.17	1.27	1.57

FOR ALL CONFIGURATIONS LINE DRAWINGS PLEASE SEE:

URB-HD-P.PDF
URB-HD-S.PDF
URB-HD-YM.PDF

© 2024 Current Lighting Solutions, LLC. All rights reserved. Information and specifications subject to change without notice. All values are design or typical values when measured under laboratory conditions.

BEACON design . performance . technology

DATE: LOCATION:

TYPE: PROJECT:

CATALOG #:

RSA-B-KENS Series Poles

ROUND STRAIGHT ALUMINUM

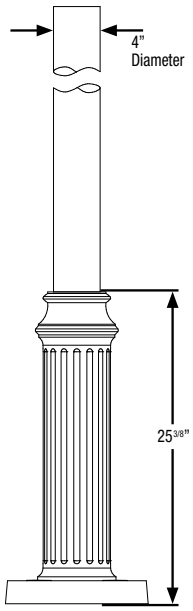

APPLICATIONS

- Lighting installations for side and top mounting of luminaires with effective projected area (EPA) not exceeding maximum allowable loading of the specified pole in its installed geographic location

CONSTRUCTION

- SHAFT: One-piece straight aluminum with fluted or smooth cross section; Extruded shafts of 6061-T6 aluminum in 1/8", 3/16", or 1/4" thickness. Decorative base of 356 cast aluminum.
- POLE CAP OR FINALS: Cap or decorative finials available for side mounted luminaires. Open top or tenons provided for post top mounted luminaires.
- HAND HOLE: Hand hole provided in cast base; Mounting provisions for grounding lug located behind cover
- ANCHOR BOLTS: Four galvanized anchor bolts provided per pole with minimum yield of 55,000 psi (ASTM F1554). Galvanized hardware with two washers and two nuts per bolt for leveling

FINISH

- Durable thermoset polyester powder coat paint finish with nominal 3.0 mil thickness
- Powder paint finish coat available in twelve standard colors; Custom colors available; RAL number preferable.

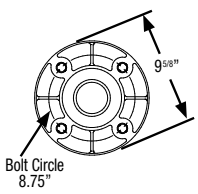

TENONS & POLE CAPS

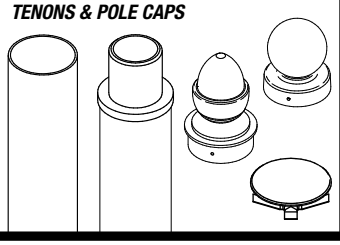

BASE DETAIL

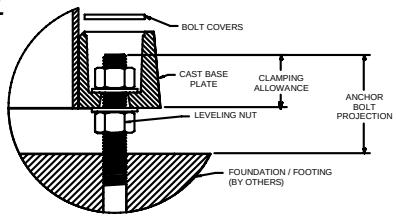

ORDERING EXAMPLE:

RSA-B-KENS - S/F - 16 - 40 - A/B/C - 2L - B3 - DBT - VM2

SERIES	STYLE	HEIGHT	SHAFT	THICKNESS
RSA-B-KENS Round Straight Aluminum Pole Beacon	**S** Smooth **F** Fluted	Reference page 2 Ordering matrix **12'**	Reference page 2 Ordering matrix **40**	Reference page 2 Ordering matrix **B**

MOUNTING

- **1** Single arm mount
- **2** Two fixtures at 180°
- **2L** Two fixtures at 90°
- **3T** Three fixtures at 90°
- **3Y** Three at 120°
- **4** Four fixtures at 90°
- **OT** Open top (includes pole cap)
- **TN3** Tenon 3 x 3
- **TN4** Tenon 3 x 4
- **CAP** Cap
- **ARC** Acorn Finial
- **BAL** Ball Finial

FINISH

- **BLT** Black Matte Textured
- **BLS** Black Gloss Smooth
- **DBT** Dark Bronze Matte Textured
- **DBS** Dark Bronze Gloss Smooth
- **GTT** Graphite Matte Textured
- **LGS** Light Grey Gloss Smooth
- **PSS** Platinum Silver Smooth
- **WHT** White Matte Textured
- **WHS** White Gloss Smooth
- **VGT** Verde Green Textured

Color Option

- **CC** Custom Color

OPTIONS

- **GFI'** 20 Amp GFCI Receptacle and Cover
- **EHH'** Extra Handhole
- **C05'** .5" Coupling
- **C07'** .75" Coupling
- **C20'** 2" Coupling
- **VM2** 2nd mode vibration damper
- **LAB** Less Anchor Bolts

DRILL PATTERN

- **B1** Cruzer, "AM" arm
- **B3** 2 bolt (2-½" spacing), Viper "A" arm
- **S2** 2 bolt (3-½" spacing), Viper "AD" arm

MOUNTING ORIENTATION

Denotes handhole location

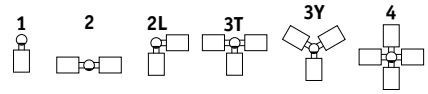

1 Specify option location using logic found on page 2 **(Option Orientation)**

ACCESSORIES- Order Separately

Catalog Number	Description
VM2SXX	2nd mode vibration damper

© 2023 HLI Solutions, Inc. All rights reserved. Information and specifications subject to change without notice. All values are design or typical values when measured under laboratory conditions.

BEACON
design . performance . technology

DATE: LOCATION:

TYPE: PROJECT:

CATALOG #:

RSA-B-KENS Series Poles

ROUND STRAIGHT ALUMINUM

ORDERING INFORMATION Cont.

Catalog Number	Height		Nominal Shaft Dimensions	Wall Thickness	Bolt Circle (suggested)	Bolt Square	Base Plate Size	Anchor Bolt Size	Bolt Projection	Pole weight (lbs)
	Feet	Meters								
RSA-B-KENS-S-10-40-A	10	3.0	4" Round	0.125"	8-3/4"	6.19"	11-5/8" x 25-3/8" Tall	3/4 x 30 x 3	2-3/4"	39
RSA-B-KENS-S-12-40-A	12	3.7	4" Round	0.125"	8-3/4"	6.19"	11-5/8" x 25-3/8" Tall	3/4 x 30 x 3	2-3/4"	43
RSA-B-KENS-S-14-40-A	14	4.3	4" Round	0.125"	8-3/4"	6.19"	11-5/8" x 25-3/8" Tall	3/4 x 30 x 3	2-3/4"	46
RSA-B-KENS-S-16-40-A	16	4.9	4" Round	0.125"	8-3/4"	6.19"	11-5/8" x 25-3/8" Tall	3/4 x 30 x 3	2-3/4"	50
RSA-B-KENS-S-18-40-A	18	5.5	4" Round	0.125"	8-3/4"	6.19"	11-5/8" x 25-3/8" Tall	3/4 x 30 x 3	2-3/4"	53
RSA-B-KENS-S-20-40-A	20	6.1	4" Round	0.125"	8-3/4"	6.19"	11-5/8" x 25-3/8" Tall	3/4 x 30 x 3	2-3/4"	57
RSA-B-KENS-S-10-40-B	10	3.0	4" Round	0.188"	8-3/4"	6.19"	11-5/8" x 25-3/8" Tall	3/4 x 30 x 3	2-3/4"	47
RSA-B-KENS-S-12-40-B	12	3.7	4" Round	0.188"	8-3/4"	6.19"	11-5/8" x 25-3/8" Tall	3/4 x 30 x 3	2-3/4"	53
RSA-B-KENS-S-14-40-B	14	4.3	4" Round	0.188"	8-3/4"	6.19"	11-5/8" x 25-3/8" Tall	3/4 x 30 x 3	2-3/4"	58
RSA-B-KENS-S-16-40-B	16	4.9	4" Round	0.188"	8-3/4"	6.19"	11-5/8" x 25-3/8" Tall	3/4 x 30 x 3	2-3/4"	63
RSA-B-KENS-S-18-40-B	18	5.5	4" Round	0.188"	8-3/4"	6.19"	11-5/8" x 25-3/8" Tall	3/4 x 30 x 3	2-3/4"	69
RSA-B-KENS-S-20-40-B	20	6.1	4" Round	0.188"	8-3/4"	6.19"	11-5/8" x 25-3/8" Tall	3/4 x 30 x 3	2-3/4"	74
RSA-B-KENS-S-22-40-B	22	6.7	4" Round	0.188"	8-3/4"	6.19"	11-5/8" x 25-3/8" Tall	3/4 x 30 x 3	2-3/4"	79
RSA-B-KENS-S-24-40-B	24	7.3	4" Round	0.188"	8-3/4"	6.19"	11-5/8" x 25-3/8" Tall	3/4 x 30 x 3	2-3/4"	84
RSA-B-KENS-S-10-40-C	10	3.0	4" Round	0.25"	8-3/4"	6.19"	11-5/8" x 25-3/8" Tall	3/4 x 30 x 3	2-3/4"	56
RSA-B-KENS-S-12-40-C	12	3.7	4" Round	0.25"	8-3/4"	6.19"	11-5/8" x 25-3/8" Tall	3/4 x 30 x 3	2-3/4"	62
RSA-B-KENS-S-14-40-C	14	4.3	4" Round	0.25"	8-3/4"	6.19"	11-5/8" x 25-3/8" Tall	3/4 x 30 x 3	2-3/4"	69
RSA-B-KENS-S-16-40-C	16	4.9	4" Round	0.25"	8-3/4"	6.19"	11-5/8" x 25-3/8" Tall	3/4 x 30 x 3	2-3/4"	76
RSA-B-KENS-S-18-40-C	18	5.5	4" Round	0.25"	8-3/4"	6.19"	11-5/8" x 25-3/8" Tall	3/4 x 30 x 3	2-3/4"	83
RSA-B-KENS-S-20-40-C	20	6.1	4" Round	0.25"	8-3/4"	6.19"	11-5/8" x 25-3/8" Tall	3/4 x 30 x 3	2-3/4"	90
RSA-B-KENS-S-22-40-C	22	6.7	4" Round	0.25"	8-3/4"	6.19"	11-5/8" x 25-3/8" Tall	3/4 x 30 x 3	2-3/4"	97
RSA-B-KENS-S-24-40-C	24	7.3	4" Round	0.25"	8-3/4"	6.19"	11-5/8" x 25-3/8" Tall	3/4 x 30 x 3	2-3/4"	104
RSA-B-KENS-F-10-40-B	10	3.0	4" Fluted	0.188"	8-3/4"	6.19"	11-5/8" x 25-3/8" Tall	3/4 x 30 x 3	2-3/4"	50
RSA-B-KENS-F-12-40-B	12	3.7	4" Fluted	0.188"	8-3/4"	6.19"	11-5/8" x 25-3/8" Tall	3/4 x 30 x 3	2-3/4"	55
RSA-B-KENS-F-14-40-B	14	4.3	4" Fluted	0.188"	8-3/4"	6.19"	11-5/8" x 25-3/8" Tall	3/4 x 30 x 3	2-3/4"	61
RSA-B-KENS-F-16-40-B	16	4.9	4" Fluted	0.188"	8-3/4"	6.19"	11-5/8" x 25-3/8" Tall	3/4 x 30 x 3	2-3/4"	67
RSA-B-KENS-F-18-40-B	18	5.5	4" Fluted	0.188"	8-3/4"	6.19"	11-5/8" x 25-3/8" Tall	3/4 x 30 x 3	2-3/4"	72
RSA-B-KENS-F-20-40-B	20	6.1	4" Fluted	0.188"	8-3/4"	6.19"	11-5/8" x 25-3/8" Tall	3/4 x 30 x 3	2-3/4"	78
RSA-B-KENS-F-22-40-B	22	6.7	4" Fluted	0.188"	8-3/4"	6.19"	11-5/8" x 25-3/8" Tall	3/4 x 30 x 3	2-3/4"	84
RSA-B-KENS-F-24-40-B	24	7.3	4" Fluted	0.188"	8-3/4"	6.19"	11-5/8" x 25-3/8" Tall	3/4 x 30 x 3	2-3/4"	90

NOTE Factory supplied template must be used when setting anchor bolts. Current will deny any claim for incorrect anchorage placement resulting from failure to use factory supplied template and anchor bolts.

EHH - EXTRA HANDHOLE

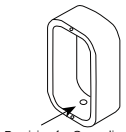

C05 - C07 - C20 - COUPLING

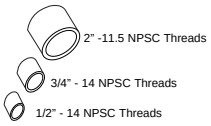

VM2 - VIBRATION DAMPER 2ND MODE

Factory installed, internal damper designed to alter pole resonance to reduce movement and material fatigue caused by 2nd mode vibration.



GFI – 20 AMP GFCI RECEPTACLE & COVER

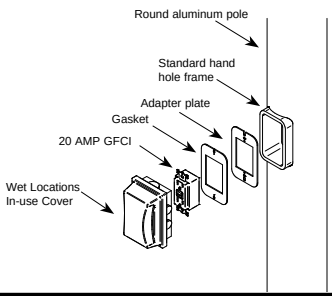

OPTION ORIENTATION

Follow the logic below when ordering location specific options. For each option, include its orientation (in degrees) and its height (in feet). Example: Option C07 should be ordered as: **RSA-B-KENS-F16-40B-TN3-DBT-C05-0-5** (.5" coupling on the handhole/arm side of pole, 15 feet up from the pole base) 1' spacing required between option. Consult factory for other configurations.

VM2SXX - VIBRATION DAMPER 2ND MODE

Field installed, internal damper designed to alter pole resonance to reduce movement and material fatigue caused by 2nd mode vibration.



VM2S08 – 8'
VM2S12 – 12'
VM2S16 – 16'
VM2S20 – 20'
VM2S24 – 24'

For more information about pole vibration and vibration dampers, please consult Pole Vibration Application Guide.
Due to our continued efforts to improve our products, product specifications are subject to change without notice.

© 2023 HLI Solutions, Inc. All rights reserved. Information and specifications subject to change without notice. All values are design or typical values when measured under laboratory conditions.

BEACON
design . performance . technology

DATE: LOCATION:

TYPE: PROJECT:

CATALOG #:

RSA-B-KENS Series Poles

ROUND STRAIGHT ALUMINUM

ASCE7-05 WIND MAP

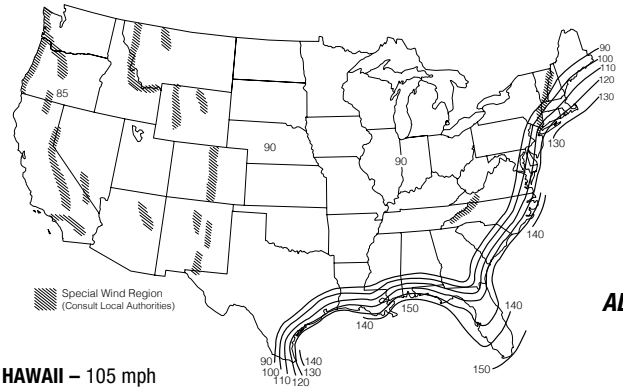

HAWAII – 105 mph

PUERTO RICO – 145 mph

***PRINTED WITH PERMISSION FROM ASCE**

FLORIDA REGION WIND MAP

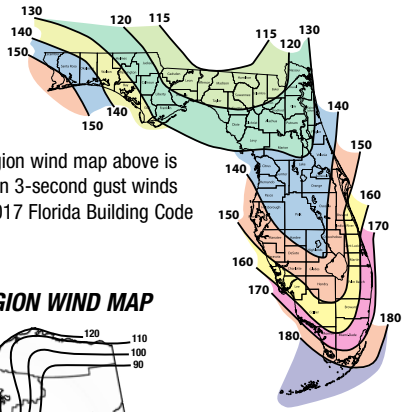

Florida region wind map above is based upon 3-second gust winds and the 2017 Florida Building Code

ALASKA REGION WIND MAP

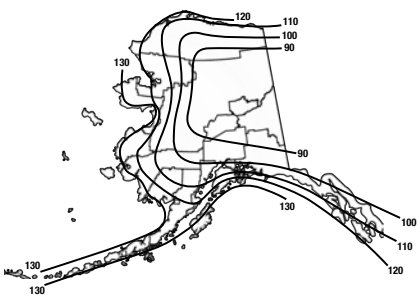

ASCE 7-05 wind map EPA Load Rating - 3 second gust wind speeds										
Catalog Number	**85**	**90**	**100**	**105**	**110**	**120**	**130**	**140**	**145**	**150**
RSA-B-KENS-S-10-40-A	12.2	10.8	8.7	7.8	7.0	5.8	4.9	4.2	3.9	3.6
RSA-B-KENS-S-12-40-A	9.0	7.9	6.2	5.5	4.9	3.9	3.3	2.8	2.6	2.4
RSA-B-KENS-S-14-40-A	6.8	5.9	4.5	3.9	3.4	2.6	2.2	1.8	1.6	1.5
RSA-B-KENS-S-16-40-A	5.1	4.4	3.2	2.7	2.3	1.6	1.3	1.0	0.9	0.8
RSA-B-KENS-S-18-40-A	3.8	3.1	2.1	1.7	1.3	0.8	0.5	NR	NR	NR
RSA-B-KENS-S-20-40-A	2.6	2.1	1.2	0.8	0.5	NR	NR	NR	NR	NR
RSA-B-KENS-S-10-40-B	18.0	16.1	13.0	11.8	10.6	8.9	7.5	6.5	6.0	5.6
RSA-B-KENS-S-12-40-B	13.6	12.1	9.7	8.7	7.8	6.4	5.4	4.6	4.3	4.0
RSA-B-KENS-S-14-40-B	10.6	9.3	7.3	6.5	5.8	4.7	3.9	3.3	3.0	2.8
RSA-B-KENS-S-16-40-B	8.3	7.3	5.6	4.9	4.3	3.3	2.7	2.3	2.1	1.9
RSA-B-KENS-S-18-40-B	6.5	5.6	4.1	3.5	3.0	2.2	1.8	1.4	1.3	1.2
RSA-B-KENS-S-20-40-B	5.0	4.2	2.9	2.4	2.0	1.3	1.0	0.7	0.6	0.5
RSA-B-KENS-S-22-40-B	3.7	3.0	1.9	1.5	1.1	0.5	NR	NR	NR	NR
RSA-B-KENS-S-24-40-B	2.7	2.1	1.1	0.7	NR	NR	NR	NR	NR	NR
RSA-B-KENS-S-10-40-C	23.3	20.8	16.9	15.3	13.9	11.6	9.9	8.5	7.9	7.4
RSA-B-KENS-S-12-40-C	17.7	15.8	12.7	11.5	10.4	8.6	7.3	6.2	5.8	5.4
RSA-B-KENS-S-14-40-C	14.0	12.4	9.8	8.8	7.9	6.5	5.4	4.6	4.3	4.0
RSA-B-KENS-S-16-40-C	11.2	9.9	7.7	6.8	6.1	4.8	4.1	3.4	3.1	2.9
RSA-B-KENS-S-18-40-C	8.9	7.8	5.9	5.2	4.5	3.5	2.9	2.4	2.2	2.0
RSA-B-KENS-S-20-40-C	7.0	6.1	4.5	3.8	3.3	2.4	1.9	1.5	1.4	1.2
RSA-B-KENS-S-22-40-C	5.5	4.7	3.3	2.7	2.2	1.5	1.1	0.8	0.7	0.6
RSA-B-KENS-S-24-40-C	4.3	3.5	2.3	1.8	1.3	0.7	NR	NR	NR	NR
RSA-B-KENS-F-10-40-B	17.9	16.0	12.9	11.6	10.5	8.7	7.2	6.1	5.6	5.1
RSA-B-KENS-F-12-40-B	13.5	12.0	9.5	8.5	7.6	6.2	5.0	4.1	3.7	3.3
RSA-B-KENS-F-14-40-B	10.4	9.2	7.2	6.3	5.6	4.4	3.5	2.7	2.4	2.1
RSA-B-KENS-F-16-40-B	8.1	7.1	5.4	4.7	4.1	3.0	2.2	1.6	1.3	1.0
RSA-B-KENS-F-18-40-B	6.3	5.4	3.9	3.3	2.8	1.9	1.2	0.6	NR	NR
RSA-B-KENS-F-20-40-B	4.7	3.9	2.7	2.2	1.7	0.9	NR	NR	NR	NR
RSA-B-KENS-F-22-40-B	3.4	2.8	1.6	1.2	0.8	NR	NR	NR	NR	NR
RSA-B-KENS-F-24-40-B	2.4	1.8	0.8	NR	NR	NR	NR	NR	NR	NR

Florida Building Code 2017 EPA Load Rating - 3 second gust wind speeds								
Catalog Number	**115**	**120**	**130**	**140**	**150**	**160**	**170**	**180**
RSA-10-40-A-S-KENS	9.0	8.2	6.9	5.8	4.9	4.1	3.8	3.6
RSA-12-40-A-S-KENS	6.5	5.8	4.8	3.9	3.2	2.6	2.5	2.4
RSA-14-40-A-S-KENS	4.7	4.1	3.2	2.5	1.9	1.4	1.2	1.1
RSA-16-40-A-S-KENS	3.2	2.8	2.0	1.4	0.9	0.5	NR	NR
RSA-18-40-A-S-KENS	2.1	1.7	1.0	0.5	NR	NR	NR	NR
RSA-20-40-A-S-KENS	1.1	0.8	NR	NR	NR	NR	NR	NR
RSA-10-40-B-S-KENS	13.6	12.4	10.5	8.9	7.6	6.6	6.3	5.5
RSA-12-40-B-S-KENS	10.1	9.2	7.6	6.4	5.4	4.5	4.3	4.0
RSA-14-40-B-S-KENS	7.6	6.9	5.6	4.6	3.7	3.0	2.9	2.7
RSA-16-40-B-S-KENS	5.7	5.1	4.0	3.2	2.4	1.8	1.6	1.4
RSA-18-40-B-S-KENS	4.2	3.6	2.7	2.0	1.4	0.8	0.6	NR
RSA-20-40-B-S-KENS	2.9	2.4	1.6	1.0	0.5	NR	NR	NR
RSA-22-40-B-S-KENS	1.9	1.4	0.7	NR	NR	NR	NR	NR
RSA-24-40-B-S-KENS	0.9	0.6	NR	NR	NR	NR	NR	NR
RSA-10-40-C-S-KENS	17.6	16.2	13.7	11.7	10.1	8.8	8.2	7.3
RSA-12-40-C-S-KENS	13.3	12.1	10.2	8.6	7.3	6.2	5.8	5.4
RSA-14-40-C-S-KENS	10.3	9.3	7.7	6.4	5.3	4.5	4.3	4.0
RSA-16-40-C-S-KENS	7.9	7.1	5.8	4.7	3.8	3.0	2.7	2.5
RSA-18-40-C-S-KENS	6.0	5.4	4.2	3.3	2.5	1.9	1.7	1.5
RSA-20-40-C-S-KENS	4.5	3.9	2.9	2.1	1.4	0.9	0.7	0.5
RSA-22-40-C-S-KENS	3.2	2.7	1.9	1.1	0.5	NR	NR	NR
RSA-24-40-C-S-KENS	2.2	1.7	0.9	NR	NR	NR	NR	NR
RSA-10-40-B-F-KENS	13.6	12.4	10.5	8.9	7.6	6.6	5.7	4.9
RSA-12-40-B-F-KENS	10.1	9.2	7.6	6.4	5.4	4.5	3.8	3.2
RSA-14-40-B-F-KENS	7.6	6.9	5.6	4.6	3.7	3.0	2.4	1.9
RSA-16-40-B-F-KENS	5.7	5.1	4.0	3.2	2.4	1.8	1.3	0.9
RSA-18-40-B-F-KENS	4.2	3.6	2.7	2.0	1.4	0.8	NR	NR
RSA-20-40-B-F-KENS	2.9	2.4	1.6	1.0	0.5	NR	NR	NR
RSA-22-40-B-F-KENS	1.9	1.4	0.7	NR	NR	NR	NR	NR
RSA-24-40-B-F-KENS	0.9	0.6	NR	NR	NR	NR	NR	NR

© 2023 HLI Solutions, Inc. All rights reserved. Information and specifications subject to change without notice. All values are design or typical values when measured under laboratory conditions.

BEACON
design . performance . technology

DATE: LOCATION:

TYPE: PROJECT:

CATALOG #:

RSA-B-KENS Series Poles

ROUND STRAIGHT ALUMINUM

NOTES

Wind-speed Website disclaimer:
Current has no connection to the linked website and makes no representations as to its accuracy. While the information presented on this third-party website provides a useful starting point for analyzing wind conditions, Current has not verified any of the information on this third party website and assumes no responsibility or liability for its accuracy. The material presented in the windspeed website should not be used or relied upon for any specific application without competent examination and verification of its accuracy, suitability and applicability by engineers or other licensed professionals. Current does not intend that the use of this information replace the sound judgment of such competent professionals, having experience and knowledge in the field of practice, nor to substitute for the standard of care required of such professionals in interpreting and applying the results of the windspeed report provided by this website. Users of the information from this third party website assume all liability arising from such use. Use of the output of these referenced websites do not imply approval by the governing building code bodies responsible for building code approval and interpretation for the building site described by latitude/longitude location in the windspeed report. http://windspeed.atcouncil.org

- Allowable EPA, to determine max pole loading weight, multiply allowable EPA by 30 lbs.
- The tables for allowable pole EPA are based on the ASCE 7-05 Wind Map or the Florida Region Wind Map for the 2010 Florida Building Code. The Wind Maps are intended only as a general guide and cannot be used in conjunction with other maps. Always consult local authorities to determine maximum wind velocities, gusting and unique wind conditions for each specific application
- Allowable pole EPA for jobsite wind conditions must be equal to or greater than the total EPA for fixtures, arms, and accessories to be assembled to the pole. Responsibility lies with the specifier for correct pole selection. Installation of poles without luminaires or attachment of any unauthorized accessories to poles is discouraged and shall void the manufacturer's warranty
- Wind speeds and listed EPAs are for ground mounted installations. Poles mounted on structures (such as bridges and buildings) must consider vibration and coefficient of height factors beyond this general guide; Consult local and federal standards
- Wind Induced Vibration brought on by steady, unidirectional winds and other unpredictable aerodynamic forces are not included in wind velocity ratings. Consult Pole Vibration Application Guide for environmental risk factors and design considerations.
- Extreme Wind Events like, Hurricanes, Typhoons, Cyclones, or Tornadoes may expose poles to flying debris, wind shear or other detrimental effects not included in wind velocity ratings

Due to our continued efforts to improve our products, product specifications are subject to change without notice.

© 2023 HLI Solutions, Inc. All rights reserved. Information and specifications subject to change without notice. All values are design or typical values when measured under laboratory conditions.

BEACON
design . performance . technology

AA-37 Nautilus

ARMS

DATE: LOCATION:

TYPE: PROJECT:

CATALOG #:

Sample	AA-37	S	4	B	P	BBT
Ordering		/	/	/	/	/
	A	B	C	D	E	F

DETAILS

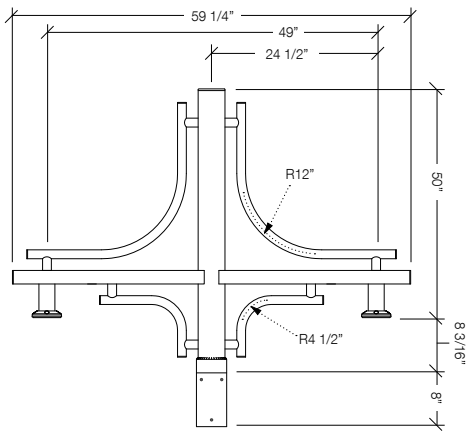

WALL BRACKET DETAILS

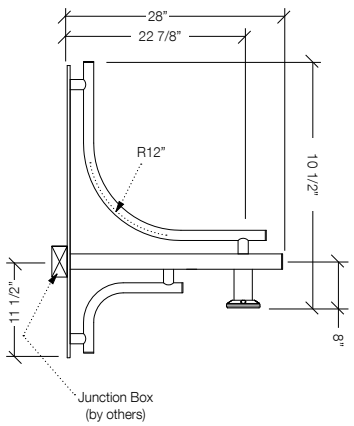

WALL PLATE DETAILS

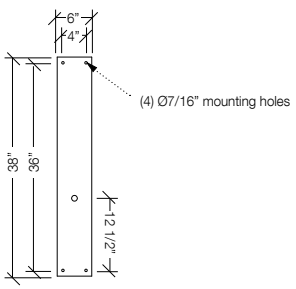

A. MODEL

AA-37	Nautilus

B. POST SHAFT PROFILE

W	wall mount
S	smooth
F	fluted

C. POST SHAFT DIAMETER

4	4"
5	5"
6	6"
OTHER	_____

D. ARRANGEMENT

B *see arrangement table below*

E. LUMINAIRE MOUNTING

P pendant

F. COLOR

BLS - Black Gloss Smooth

BBT	basic black textured
BMT	black matte textured
WHT	white textured
MBT	metallic bronze textured
BZT	bronze textured
DBT	dark bronze textured
GYS	gray smooth
DPS	dark platinum smooth
GNT	green textured
MST	metallic silver textured
MTT	metallic titanium textured
OWI	old world iron
RAL	_____

Construction: All cast aluminum parts shall be low copper alloy A356. All extruded aluminum parts shall be alloy 6061-T6, 6063-T5 or equal.

EPA (effective projected area): EPA is de¬fined as (projected surface area X drag factor) and measured in ft2. Allowable post, luminaire arm, luminaire and accessory EPAs are derived from the most current published AASHTO (American Association of State Highway and Transportation Officials) standard, currently AASHTO 2001 (50yr design life). Customer assumes all responsibility for selecting the ap¬propriate post for installation (consult factory for assistance). Luminaire arm, luminaire and accessory EPA must be equal to or less than allowable EPA of post. Consult a professional engineer for compliance with local codes and standards.

Fasteners: All fasteners shall be Corrosion Resistant. When tamper resistant fasteners are required, spanner HD (snake eye) style shall be provided (special tool required, available at additional cost).

Finish: Finish shall be a Beacote V polyester powder-coat electro-statically applied and thermocured. Beacote V finish shall consist of a five stage iron phosphate chemical pretreatment regimen with a polymer primer sealer, oven dry off, and top coated with a thermoset super TGIC polyester pow¬der coat finish. The finish shall meet the AAMA 605.2 performance specification which includes passing a 3000 hour salt spray test for corrosion resistance and resists cracking or loss of adhesion per ASTM D522 and resists surface impacts of up to 160 inch-pound.

Limited Warranty: Beacon Products warrants its products, to the original purchaser, against defects in materials and workmanship for proper usage for a period of 5 years after date of production, when properly installed, maintained and appropriately specified. See Warranty Information on www.beaconproducts.com for complete details and exclusions.

2CC - 2" Cast Coupling

		arrangement (EPA index ft² / weight (lbs))									
shaft Ø		A	B	C	D	E	F	G	H	I	J
wall	weight	18	-	-	-	-	-	-	-	-	-
Ø4"	EPA	-	3.37	5.04	5.04	-	5.19	5.19	-	-	-
	weight	-	26	36	38	-	46	48	-	-	-
Ø5"	EPA	-	3.80	5.47	5.47	4.49	5.62	5.62	6.07	6.85	6.85
	weight	-	30	40	42	40	50	52	50	60	62
Ø6"	EPA	-	4.22	5.89	5.89	4.91	6.04	6.04	6.49	7.27	7.27
	weight	-	34	44	46	44	54	56	54	64	66

© 2022 HLI Solutions, Inc. All rights reserved. Information and specifications subject to change without notice. All values are design or typical values when measured under laboratory conditions.

Submitted by Swaney Lighting	Catalog Number: AA-00--18/4"MTC/BLS Notes:	Type: A SLA24-58713

BEACON
design . performance . technology

Banner Arms

ARMS

DATE:	LOCATION:
TYPE:	PROJECT:
CATALOG #:	

Banner Arm Mounting Styles

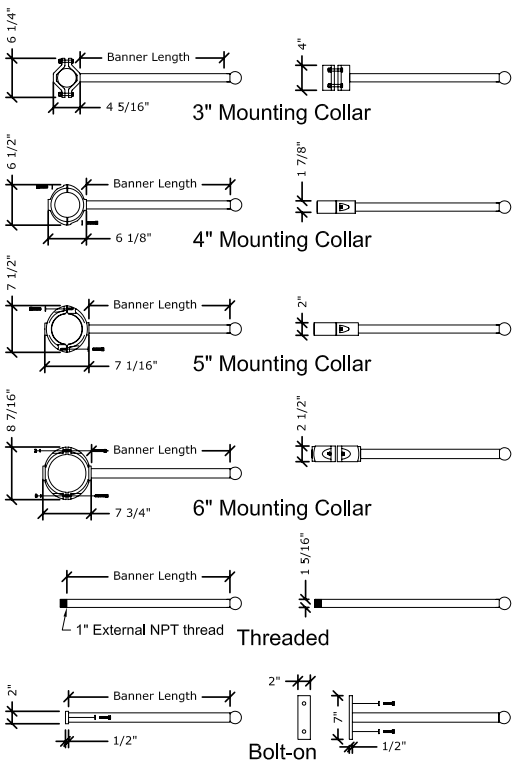

Specifications

Construction:
All cast aluminum parts shall low copper alloy A356. All extruded aluminum parts shall be alloy 6061-T6, 6063-T5 or equal.

Fasteners:
All fasteners shall be stainless steel. When tamper resistant fasteners are required, spanner HD (snake eye) style shall be provided (special tool required, available at additional cost), consult factory for availability.

Finish:
Finish shall be Beacote III polyester powdercoat electrostatically applied and thermocured. Poles shall be subjected to chemical pre-treatment prior to painting by immersion process.

Options

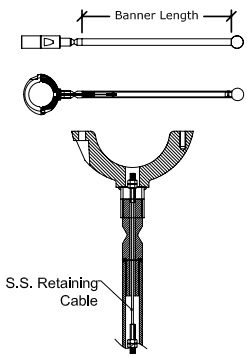

Breakaway Coupler System

breakaway speed varies with banner size (consult factory)

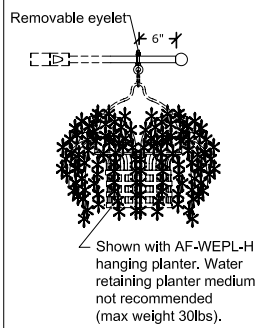

Planter Eyelet

Ordering Example:
AA-0024 / 4"MTC / BA / BKT

AA-00 __ / _____ / ___ / ___ ____

Length	Mounting	Options	Finish
☐ 18 18"	☐ 3"MTC mounting collar for 3" shaft	☐ BA breakaway coupler system*	☐ BB black
☐ 20 20"	☐ 4"MTC mounting collar for 4" shaft	☐ PA removable planter eyelet*	☐ BZ bronze
☐ 22 22"	☐ 5"MTC mounting collar for 5" shaft	☐ 2X two banner arms at 180°	☐ BG green
☐ 24 24"	☐ 6"MTC mounting collar for 6" shaft		☐ BW white
☐ 30 30"	☐ BO bolted connection		☐ BY gray
	☐ TO threaded connection		☐ RAL RAL-
			☐ OTHER

Consult factory for premium and verde finishes. Custom colors available.

BLS - Black Gloss Smooth

Notes:
* Consult factory

© 2022 HLI Solutions, Inc. All rights reserved. Information and specifications subject to change without notice. All values are design or typical values when measured under laboratory conditions.

BEACON
design . performance . technology

Domus
POLES & BASES

DATE: LOCATION:

TYPE: PROJECT:

CATALOG #:

RSAB-BC-60-BLS-DOMU

	DOMU		*5*		*BBT*
Sample Ordering		/		/	
	A		**B**		**C**

DETAILS

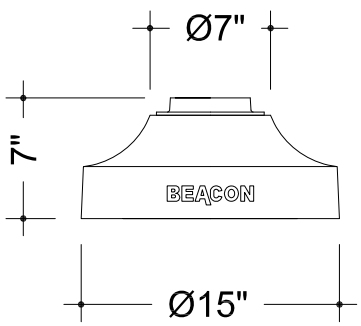

A. MODEL

DOMU	Domus

B. POST SHAFT DIAMETER

3	3"
4	4"
5	5"
6	6"

C. COLOR

BBT	basic black textured
BMT	black matte textured
WHT	white textured
MBT	metallic bronze textured
BZT	bronze textured
DBT	dark bronze textured
GYS	gray smooth
DPS	dark platinum smooth
GNT	green textured
MST	metallic silver textured
MTT	metallic titanium textured
OWI	old world iron
RAL	_____

BLS - Black Gloss Smooth

Construction: All cast aluminum parts shall be low copper alloy A356. All extruded aluminum parts shall be alloy 6061-T6, 6063-T5 or equal. Standard fluted shaft profile shall be 16-flat flutes for 3"OD and 12-flat flutes for 4", 5", & 6"OD.

Base Covers: require specification of smooth or fluted shafts of the size required to meet wind load requirements

Vibration Dampeners: Vibration dampener pads shall be provided when required by customer or deemed necessary by Beacon Products. Please consult factory for bridge mounted applications.

EPA (effective projected area): EPA is defined as (projected surface area X drag factor) and measured in ft2. Allowable post, luminaire arm, luminaire and accessory EPAs are derived from the most current published AASHTO (American Association of State Highway and Transportation Officials) standard, currently AASHTO 2001 (50yr design life). Customer assumes all responsibility for selecting the appropriate post for installation (consult factory for assistance). Luminaire arm, luminaire and accessory EPA must be equal to or less than allowable EPA of post. Consult a professional engineer for compliance with local codes and standards.

Anchor Bolt: Anchor bolts, sized as required, double hex nuts and flat washers shall be hot dipped galvanized steel. A bolt circle template shall be provided for installation.

Fasteners: All fasteners shall be Corrosion Resistant. When tamper resistant fasteners are required, spanner HD (snake eye) style shall be provided (special tool required, available at additional cost).

Finish: Finish shall be a Beacote V polyester powdercoat electrostatically applied and thermocured. Beacote V finish shall consist of a five stage iron phosphate chemical pretreatment regimen with a polymer primer sealer, oven dry off, and top coated with a thermoset super TGIC polyester powder coat finish. The finish shall meet the AAMA 605.2 performance specification which includes passing a 3000 hour salt spray test for corrosion resistance and resists cracking or loss of adhesion per ASTM D522 and resists surface impacts of up to 160 inch-pound.

Limited Warranty: Beacon Products warrants its products, to the original purchaser, against defects in materials and workmanship for proper usage for a period of 5 years after date of production, when properly installed, maintained and appropriately specified.

Due to our continued efforts to improve our products, product specifications are subject to change without notice.

© 2022 HLI Solutions, Inc. All rights reserved. Information and specifications subject to change without notice. All values are design or typical values when measured under laboratory conditions.

Attachment 15
Drawings

UNIVERSITY OF NEW ENGLAND
MARINE SCIENCE CENTER PIER

BIDDEFORD, MAINE

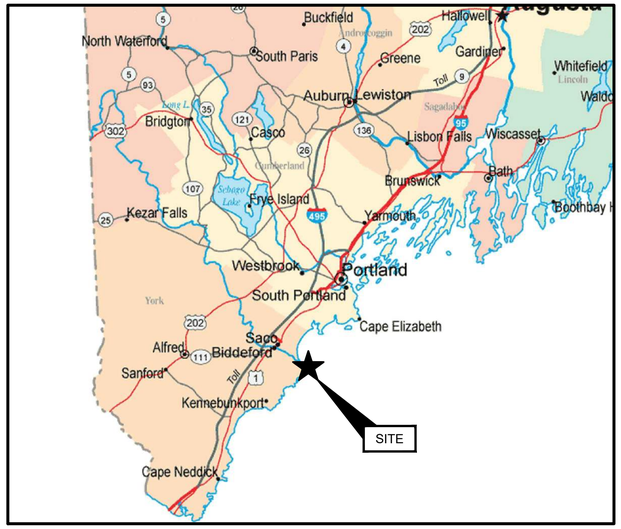

SOURCE:
MAINE ROAD MAP, GOOGLE IMAGES, ACCESSED SEPTEMBER 2023.

STATE MAP
(NOT TO SCALE)

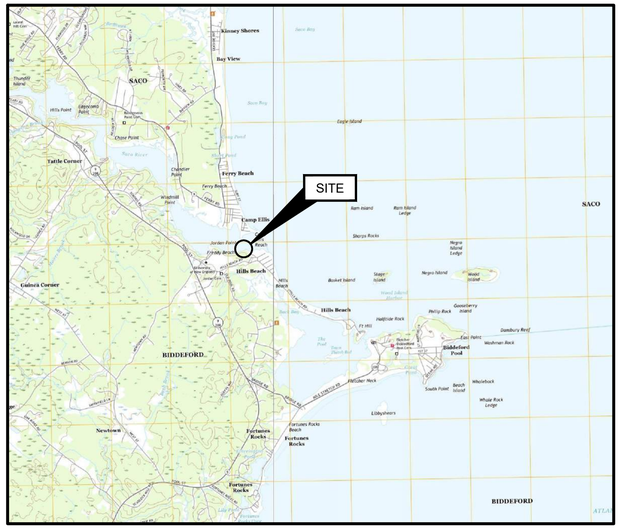

SOURCE:
USGS TOPOGRAPHICAL MAP OF BIDDEFORD, MAINE 2022

SITE LOCATION MAP
(NOT TO SCALE)

PROJECT INFO:

ZONING DISTRICT: INSTITUTIONAL (IN) ZONE WITH LIMITED RESIDENTIAL (LR) SHORELAND OVERLAY
EXISTING AND PROPOSED USE: MARINE RESEARCH CENTER
WATERSHED: SACO RIVER
WITHIN MS4 URBANIZED AREA: YES
WITHIN 100-YEAR FLOOD ZONE: NO
PUBLIC ROAD PROPOSED: NO
PRIVATE ROAD PROPOSED: YES
PUBLIC SEWER CONNECTION: YES, EXISTING
PUBLIC STORM DRAIN CONNECTION: NO

PERVIOUS COVERAGE: EXISTING= 105,843 SF
PROPOSED=95,194 SF

IMPERVIOUS COVERAGE: EXISTING=5,546 SF
PROPOSED=16,195 SF

BUILDING ROOF SQUARE FOOTAGE=751 WITHIN LIMIT OF DISTURBANCE

WAIVERS REQUESTED:
ARTICLE XI.II. SECTION 5.B.1.A. - SEE COVER LETTER
ARTICLE XI.II. SECTION 5.B.1.E.3. - SLOPES STEEPER THAN 2:1 IN LEDGE
ARTICLE VI. SECTION 26.F. - SLOPES STEEPER THAN 3:1 IN CUT/FILL SLOPES
ARTICLE XIV SECTION 15.H.4 - ROADWAY BANKS STEEPER THAN 2:1

811 DigSafe

THIS DOCUMENT, AND THE IDEAS AND DESIGNS INCORPORATED HEREIN, IS AN INSTRUMENT OF PROFESSIONAL SERVICE, IS THE PROPERTY OF GEI CONSULTANTS AND IS NOT TO BE USED, IN WHOLE OR IN PART, FOR ANY OTHER PROJECT WITHOUT THE WRITTEN AUTHORIZATION OF GEI CONSULTANTS.

PREPARED FOR:

UNIVERSITY OF NEW ENGLAND
11 HILLS BEACH ROAD
BIDDEFORD, MAINE
(207)283-0171

PREPARED BY:

GEI CONSULTANTS, INC.
5 MILK STREET
PORTLAND, ME 04101
(207)797-8901

CITY OF BIDDEFORD PLANNING BOARD
PROJECT NO. 2024.34
GEI PROJECT NO. 2203703

SHEET INDEX

SHEET NO.	DRAWING NO.	TITLE
1	G-001	COVER SHEET
2	G-002	GENERAL NOTES
3	G-003	VICINITY PLAN
4	B-001	BORING LOCATION PLAN
5	B-002	BORING LOGS (1 OF 3)
6	B-003	BORING LOGS (2 OF 3)
7	B-004	BORING LOGS (3 OF 3)
8	B-005	INTERPRETIVE SUBSURFACE PROFILE
9	C-001	EXISTING CONDITIONS PLAN
10	C-002	DEMOLITION AND CONSTRUCTION STAGING
11	C-003	SITE PLAN
12	C-004	GRADING AND DRAINAGE PLAN
13	C-005	EROSION CONTROL PLAN
	ES1.1	ELECTRICAL SITE PLAN
14	C-006	ACCESS ROAD PLAN AND PROFILE STA 1+00 TO MATCHLINE STA 4+00
15	C-007	ACCESS ROAD PLAN AND PROFILE MATCHLINE STA 4+00 TO STA 6+60
16	C-008	ACCESS ROAD TYPICAL SECTION
17	C-009	ACCESS ROAD SECTIONS 2+00 TO 3+75
18	C-010	ACCESS ROAD SECTIONS 4+00 TO 5+75
19	C-011	SITE DETAILS I
20	C-012	EROSION CONTROL NOTES
21	C-013	EROSION CONTROL DETAILS I
22	C-014	EROSION CONTROL DETAILS II
23	C-015	REVEGETATION PLAN
24	C-016	REVEGETATION NOTES, DETAILS AND SCHEDULES
25	S-001	PIER LAYOUT PLAN
26	S-002	PIER PLANS AND ELEVATIONS
27	S-003	TYPICAL PIER SECTIONS (1 OF 2)
28	S-004	TYPICAL PIER SECTIONS (2 OF 2)
29	S-005	PILE PLAN
30	S-006	PRECAST PILE CAP PLAN (1 OF 2)
31	S-007	PRECAST PILE CAP PLAN (1 OF 2)
32	S-008	PRECAST DECK PLANK PLAN
33	S-009	MISCELLANEOUS DETAILS (1 OF 5)
34	S-010	MISCELLANEOUS DETAILS (2 OF 5)
35	S-011	MISCELLANEOUS DETAILS (3 OF 5)
36	S-012	MISCELLANEOUS DETAILS (4 OF 5)
37	S-013	MISCELLANEOUS DETAILS (5 OF 5)
38	S-014	ABUTMENT DETAILS
39	F-001	FLOAT PLAN AND DETAILS

FOR PERMIT

NO.	DATE	ISSUE/REVISION	APP
8	6/5/2025	ADDRESS PB COMMENTS	DJB
7	4/16/2025	BIDDEFORD PERMIT APP.	DJB
6	9/17/2024	REVISED PERMIT SET	DJB
5	6/27/2024	REVISED PERMIT SET	DJB
4	9/14/2023	DEP PERMIT SET	DJB

STATE OF MAINE
BRIAN M. MCDEVITT
PE18260
LICENSED PROFESSIONAL ENGINEER
6/9/2025

DWG. NO.
G-001

SHEET NO.
1 OF 39

DICASTELNUOVO, VINNIE B:\Working\UNIVERSITY OF NEW ENGLAND\2203703 UNE Marine Science Center Pier\00_CAD\Design\Sheets\2203703-G-001.dwg - 6/9/2025

COORDINATION OF WORK:

1. THE CONTRACTOR SHALL SCHEDULE ALL ACTIVITIES SO AS TO LIMIT IMPACT TO MARINE AND LANDSIDE USES.
2. WORK SHALL BE COORDINATED WITH THE OWNER AND THEIR REPRESENTATIVES:

UNE:A:A:A:	ANDREW PHILIPPE	207-602-2365 (OFFICE)	207-400-6166 (CELL)
GEI:A:A:B:	DANIEL BANNON	207-347-2372 (OFFICE)	207-671-2583 (CELL)
SDA:A:A:C:	TOM SAUCIER	207-449-4275	

3. WORK IS SUBJECT TO THE FOLLOWING TIME OF YEAR AND TIMING OF ACTIVITY RESTRICTIONS:
   - TO BE DEFINED UPON PERMIT APPROVAL.
4. CONTRACTOR ACCESS TO THE SITE BY WATER SHALL AT NO TIME IMPACT USE OF THE ADJACENT FEDERAL NAVIGATION CHANNEL.
5. THE OWNER WILL PERMIT THE CONTRACTOR TO HAVE A LAYDOWN AREA ON THE UPLAND PROPERTY FOR USE DURING CONSTRUCTION. AN APPROXIMATE LAYDOWN AREA IS SHOWN ON SHEET C-005. THE FINAL LOCATION AND DIMENSIONS OF THE LAYDOWN AREA SHALL BE APPROVED BY THE OWNER.

SITE ENVIRONMENTAL CONTROLS:

1. ALL WORK SHALL BE PERFORMED IN COMPLIANCE WITH CITY, STATE, AND FEDERAL PERMITS. COPIES OF PERMIT APPROVALS ARE PROVIDED IN THE PROJECT MANUAL.

OSHA REQUIREMENTS:

1. PURSUANT TO 26 M.R.S.A. §565, THE CONTRACTOR SHALL ADHERE TO THE OCCUPATIONAL SAFETY AND HEALTH STANDARDS AS PROMULGATED BY THE FEDERAL OCCUPATIONAL SAFETY AND HEALTH ADMINISTRATION (OSHA) AT 29-CFR PART 1926 AS MOST RECENTLY AMENDED.

EROSION CONTROL:

1. EROSION AND SEDIMENTATION CONTROL MEASURES ARE PROPOSED TO CONTROL ACCELERATED EROSION AND SEDIMENTATION AND REDUCE ADVERSE IMPACTS FROM RUNOFF AND EROSION AT THE WORK SITE.
2. APPLICATION OF TEMPORARY AND PERMANENT EROSION CONTROL MEASURES SHALL BE IN ACCORDANCE WITH THE LATEST EDITION OF THE MAINE EROSION AND SEDIMENT CONTROL BMP'S PUBLISHED BY MAINE DEP AND AVAILABLE AT: HTTPS://WWW.MAINE.GOV/DEP/LAND/EROSION/ESCBMPS/
3. THE WORK SHALL BE PERFORMED BY A CONTRACTOR THAT IS CERTIFIED BY MAINE DEP IN EROSION AND SEDIMENT CONTROL MEASURES. A CERTIFIED INDIVIDUAL SHALL BE ONSITE DURING ALL CONSTRUCTION ACTIVITY.
4. EROSION AND SEDIMENTATION DUE TO RUNOFF, TIDAL EXPOSURE, AND WAVE ACTION SHALL BE CONTROLLED BY STAGING CONSTRUCTION ACTIVITY TO MINIMIZE AREA AND TIME OF DISTURBANCE, APPLICATION OF SILT FENCE, BARRIERS, AND OTHER EROSION CONTROL MEASURES, AND PRESERVING NATURAL VEGETATION WHENEVER POSSIBLE.
5. THE CONTRACTOR'S SEQUENCE OF OPERATIONS AND SCHEDULE FOR WORK ACTIVITIES SHALL ACT TO MINIMIZE EXPOSURE TO EROSION.
6. THE CONTRACTOR SHALL TAKE CARE TO LIMIT THE AREA OF SOIL DISTURBANCE TO THE MINIMUM NECESSARY TO COMPLETE THE WORK.
7. EROSION CONTROL MEASURES, SEEDING, AND VEGETATION SHALL BE INSPECTED WEEKLY AND AFTER RAINSTORMS, RUNOFF EVENTS, AND STORM EVENTS UNTIL FINAL ACCEPTANCE. REPAIRS SHALL BE MADE WHEN NO LONGER SERVICEABLE DUE TO DAMAGE OR ACCUMULATION OF SEDIMENT.
8. AT THE COMPLETION OF CONSTRUCTION, ALL DISTURBED AREAS SHALL BE RESTORED TO THEIR ORIGINAL CONDITION AND CONTOUR, UNLESS OTHERWISE INDICATED ON THE PLANS.

SITE PREPARATION:

1. CONTRACTOR SHALL INSTALL ALL SIGNAGE PRIOR TO INITIATION OF CONSTRUCTION ACTIVITIES. INCLUDE OWNER PROJECT SIGNAGE AND FEDERAL AND STATE MANDATED WORK PLACE SIGNAGE.
2. CONTRACTOR SHALL HAVE IN-PLACE TRASH AND SANITARY FACILITIES FOR THE WORK PLACE.
3. DISCOVERY OF INCONSISTENT SITE INFORMATION OR CONDITIONS ARE TO BE IMMEDIATELY CONVEYED TO THE OWNER AND ENGINEER PRIOR TO COMMENCING OR CONTINUING CONSTRUCTION.
4. THE CONTRACTOR SHALL NOTIFY DIG SAFE PRIOR TO COMMENCING ANY WORK.
5. LOCATIONS OF EXISTING UTILITIES SHOWN ARE APPROXIMATE. THE CONTRACTOR SHALL VERIFY LOCATIONS OF UTILITIES AS MAY BE REQUIRED. THE CONTRACTOR SHALL BE FULLY RESPONSIBLE FOR ANY AND ALL DAMAGES OCCURRING AS A RESULT OF THE CONTRACTOR'S FAILURE TO LOCATE AND PROTECT UNDERGROUND UTILITIES. ALL REPAIRS SHALL BE MADE AT THE CONTRACTOR'S EXPENSE.
6. CONTRACTOR SHALL MAINTAIN AND PROTECT ALL EXISTING UTILITIES AND DRAINAGE AT ALL TIMES. THE CONTRACTOR SHALL REPAIR ANY DAMAGE AND RESTORE TO THE PRE-EXISTING CONDITION AT NO COST TO THE OWNER.
7. CONTRACTOR SHALL PROTECT ALL EXISTING STRUCTURES AND SHALL PERFORM THE WORK IN A MANNER THAT AVOIDS DAMAGE TO EXISTING STRUCTURES. STRUCTURES INCLUDE, BUT ARE NOT LIMITED TO, BUILDINGS, PIERS, BULKHEADS, FLOATS, PIER UTILITIES AND FIXTURES, AND RIPRAP SLOPES. CONTRACTOR SHALL REPAIR ANY DAMAGE AT NO ADDITIONAL COST TO THE CITY.
8. CONTRACTOR SHALL SUPPLY ALL NECESSARY TEMPORARY UTILITIES FOR CONSTRUCTION INCLUDING, BUT NOT LIMITED TO; WATER, POWER, LIGHTING, DATA, AND TELEPHONE.
9. CONTRACTOR SHALL READ AND UNDERSTAND ALL REGULATORY CONDITIONS ASSOCIATED WITH THE PROJECT AND SHALL COMPLY WITH ALL ENVIRONMENTAL REQUIREMENTS AND PERMIT CONDITIONS.
10. CONTRACTOR SHALL PROVIDE A CONFINED CONCRETE TRUCK WASHDOWN AREA AT A LOCATION TO BE APPROVED BY THE ENGINEER. WASHDOWN AREA SHALL INCLUDE PROTECTION TO PAVEMENT, A PERIMETER WALL AND A FILTER FABRIC LINER. NO RUNOFF CONTAINING CEMENT OR OTHER SUSPENDED SOLIDS WILL BE PERMITTED. ALL MATERIALS SHALL BE COMPLETELY REMOVED UPON COMPLETION OF CONSTRUCTION AND DISPOSED OF AT AN APPROVED DISPOSAL LOCATION.

CODES:

1. MAINE DOT STANDARD SPECIFICATIONS, MARCH 2020 ED. WITH SUPPLEMENTAL SPECIFICATIONS THROUGH JUNE 16,2023.
2. MAINE UNIFORM BUILDING AND ENERGY CODE (MUBEC).
3. AMERICAN CONCRETE INSTITUTE (ACI) 318-14: BUILDING CODE REQUIREMENTS FOR STRUCTURAL CONCRETE, 2014 ED.
4. CONCRETE REINFORCING STEEL INSTITUTE (CRSI):
5. AMERICAN INSTITUTE FOR STEEL CONSTRUCTION (AISC) STEEL CONSTRUCTION MANUAL, 15TH ED.
6. ALUMINUM ASSOCIATION, ALUMINUM DESIGN MANUAL, 2015 ED.
7. AMERICAN WOOD COUNCIL, NATIONAL DESIGN SPECIFICATIONS (NDS) FOR WOOD CONSTRUCTION, 2015 ED.

SITE CONTROL AND BASELINES:

1. PROJECT BASE PLAN HAS BEEN DEVELOPED FROM A COMPILATION OF MULTIPLE SURVEYS AS DESCRIBED UNDER "SURVEY AND PROPERTY NOTES".
2. ELEVATIONS ARE PROVIDED IN NAVD88 VERTICAL DATUM UNLESS OTHERWISE NOTED.
3. THE CONTRACTOR SHALL INSTALL SURVEY CONTROL AS NECESSARY TO PERFORM THE WORK. PERMANENT SURVEY CONTROL (AT LEAST 2 POINTS) SHALL BE ESTABLISHED FOR THE PROJECT AND PROTECTED FROM DAMAGE DURING CONSTRUCTION AND PROVIDED ON AS-BUILT DRAWINGS.
4. THE CONTRACTOR SHALL ESTABLISH AND MAINTAIN PROJECT BASELINES AND CONTROL AS REQUIRED TO ENSURE ACCURATE LOCATION OF ALL ELEMENTS OF THE PROJECT.

SURVEY AND PROPERTY NOTES:

1. LOCUS PARCEL IS DEPICTED ON CITY OF BIDDEFORD, TAX MAP 52, LOT 4 AND IS LOCATED IN THE INSTITUTIONAL (IN) ZONE. A PORTION OF THE SITE IS LOCATED IN THE LIMITED RESIDENTIAL (LR) SHORELAND OVERLAY DISTRICT.
2. THE RECORD OWNER IS THE UNIVERSITY OF NEW ENGLAND, BY DEED DATED APRIL 18, 1962, RECORDED IN THE YORK COUNTY REGISTRY OF DEEDS IN BOOK 1484, PAGE 0145.
3. UPLAND TOPOGRAPHY AND BASE SURVEY INFORMATION DEPICTED HEREON ARE BASED ON THE FOLLOWING SURVEYS:
   - "TOPOGRAPHIC SURVEY, MARINE SCIENCE CENTER, UNIVERSITY OF NEW ENGLAND" BY OWEN HASKELL, INC. DATED DEC. 13, 2022.
   - "TOPOGRAPHIC SURVEY AT MARINE SCIENCE CENTER" BY STATEWIDE SURVEYS, INC., DATED MAY 4, 2015.
4. HYDROGRAPHIC DATA DEPICTED HEREON IS BASED ON 2022 SURVEY BY OWEN HASKELL SURVEY.
5. FEDERAL CHANNEL LIMITS ARE DEPICTED BASED ON THE PLAN. "SACO RIVER, SACE AND BIDDEFORD, MAINE, CONDITION SURVEY" PUBLISHED BY THE U.S. ARMY CORPS OF ENGINEERS, DATED JULY 3, 2021.
6. HORIZONTAL COORDINATES ARE BASED ON NAD83 MAINE STATE PLANE WEST ZONE-1801 AND ARE EXPRESSED IN FEET. ELEVATIONS ARE BASED ON NAVD88 VERTICAL DATUM AND CONTROL POINTS PROVIDED BY UNE.
7. UTILITY INFORMATION DEPICTED HEREON IS BASED ON FEBRUARY 2023 UTILITY LOCATION SURVEY PERFORMED BY BLOOD HOUND, LLC UNDERGROUND UTILITY LOCATORS AND MAY NOT NECESSARILY REPRESENT ALL EXISTING UTILITIES. CONTACT DIG SAFE (1-888-DIG-SAFE) AND VERIFY EXISTING UTILITIES PRIOR TO ANY CONSTRUCTION OR EXCAVATION.
8. PORTIONS OF THE PROPERTY ARE DEPICTED AS BEING IN A SPECIAL FLOOD HAZARD AREA BASED ON FEMA PRELIMINARY FIRM 23031C0459G DATED APRIL 14, 2017. THE SITE IS LOCATED IN A VE ZONE HAVING BASE FLOOD ELEVATION OF 14 FT NAVD88.
9. SUBSURFACE INFORMATION IS BASED ON EXPLORATIONS PERFORMED IN 2015 AND 2022 CONSISTING OF BORINGS, PROBES, AND TEST PITS. REFER TO SHEETS B-001 - B-005 FOR SUBSURFACE INFORMATION.

CONCRETE

1. CAST IN PLACE CONCRETE SHALL CONFORM TO THE FOLLOWING SPECIFICATIONS BASED ON THE MAINE DOT STANDARD SPECIFICATION:

LOCATION	MDOT CLASS	f'c
ALL CONCRETE	CLASS LP	5,000 PSI

2. ALL REINFORCEMENT SHALL BE NEW DEFORMED BARS, GRADE 60 CONFORMING TO ASTM A615, HOT DIP GALVANIZED ACCORDING TO ASTM A767/A767M OR ASTM A1094/A1094M.
3. REINFORCEMENT ACCESSORIES SHALL BE DIELECTRIC COATED STEEL OR APPROVED PLASTIC.
3. GROUT SHALL BE A HIGH STRENGTH, NON-SHRINK GROUT WITH SALT WATER RESISTANCE.
4. CONCRETE COVER SHALL BE A MINIMUM OF 3 INCHES UNLESS NOTED OTHERWISE.
5. ALL EXPOSED EDGES OF CONCRETE AT COLD JOINTS SHALL HAVE A ROUGHENED FINISH AND BE COATED WITH EPOXY BONDING AGENT PRIOR TO CASTING ADJACENT POUR.
6. PROVIDE 1 INCH CHAMFER ON ALL EXPOSED EDGES UNLESS NOTED OR DIRECTED OTHERWISE.
7. TOP SURFACE OF EXPOSED CONCRETE SHALL RECEIVE A BROOM FINISH.
8. COAT FINISHED SURFACES OF CONCRETE WITH A 100% SILANE PENETRATING CONCRETE SEALER SUITABLE FOR USE IN A MARINE ENVIRONMENT. SEALER SHALL BE LISTED ON THE MAINE DOT QUALIFIED PRODUCTS LIST.
9. REINFORCEMENT DEVELOPMENT AND LAP SPLICE LENGTHS SHALL BE IN ACCORDANCE WITH ACI 318.
10. CONCRETE MIX DESIGN SHALL INCLUDE THE USE OF CORROSION INHIBITING ADMIXTURE AT DOSAGE SUITABLE FOR USE IN AN AGGRESSIVE MARINE ENVIRONMENT. CORROSION INHIBITOR SHALL BE LISTED ON THE MAINE DOT QUALIFIED PRODUCTS LIST.

EPOXY ANCHORS

1. ANCHOR ROD, WASHERS, AND NUTS SHALL CONFORM TO ASTM F1554, GRADE 36, AND SHALL BE HOT DIP GALVANIZED.
2. THE MINIMUM EDGE DISTANCE AND MINIMUM SPACING FOR ALL ANCHORS SHALL BE 6 BOLT DIAMETERS.
3. ALL HOLES SHALL BE DRILLED TO THE RECOMMENDED DIAMETER PER MANUFACTURERS REQUIREMENTS USING CARBIDE DRILL BITS MEETING ANSI B212.5-1994.
4. HOLES SHALL BE BRUSHED WITH NYLON BRUSH AND BLOWN CLEAN USING OIL-FREE COMPRESSED AIR A MINIMUM OF TWO TIMES.
5. ALL HOLES SHALL BE FREE OF STANDING WATER BEFORE INSTALLING ANCHORS.
6. EPOXY SHALL HAVE MINIMUM BOND STRENGTH OF 1,600 PSI @ 14 DAYS.

EARTHWORK

1. EARTHWORK MATERIALS SHALL MEET THE FOLLOWING SPECIFICATIONS:

AGGREGATE BASE	TYPE A (MDOT 703.06A)
AGGREGATE SUBBASE	TYPE D (MDOT 703.06C)
WALL BACKFILL	CRUSHED STONE ¾" (MDOT 703.13)
DRAINAGE STONE	CRUSHED STONE 2 INCH (MDOT 703.31)
ORDINARY BORROW	SEE #2 BELOW.

2. ORDINARY BORROW SHALL BE EXISTING GRANULAR SOIL WITH MAXIMUM 4 INCH STONE SUBJECT TO APPROVAL BY THE ENGINEER. ALL DEBRIS OR OTHER DELETERIOUS MATERIALS SHALL BE REMOVED FROM ORDINARY BORROW PRIOR TO REUSE.

STEEL

1. STEEL ANGLE, STRAPS, AND MISCELLANEOUS FABRICATIONS SHALL BE ASTM A36 HOT DIP GALVANIZED AFTER FABRICATION, UNLESS OTHERWISE NOTED.
2. ALL FASTENERS SHALL BE HOT-DIP GALVANIZED OR STAINLESS STEEL.
3. ALL BOLTS SHALL CONFORM TO ASTM A307. MINIMUM SIZE SHALL BE ⅝ INCH UNLESS OTHERWISE NOTED.

HEAVY TIMBER

1. UNLESS OTHERWISE SPECIFIED, ALL TIMBER FRAMING TO BE USED SHALL BE NO. 1 AND BETTER SOUTHERN PINE AS GRADED BY SPIB AND WITH DESIGN VALUES PER NDS 2015.
2. ALL TIMBER SHALL BE NEW AND SUPPLIED WITH NOMINAL DIMENSIONS UNLESS OTHERWISE NOTED.
3. ALL NEW SOUTHERN YELLOW PINE TIMBER MEMBERS TO WHICH THE PUBLIC MAY BE EXPOSED SHALL BE TREATED WITH ALKALINE COPPER QUATERNARY (ACQ) IN ACCORDANCE WITH AWPA & AWPB W/ MINIMUM RETENTION OF 0.60 LBS. PER CUBIC FOOT. ALL OTHER SOUTHERN YELLOW PINE MEMBERS SHALL BE CCA TREATED TO 2.5 PCF RETENTION.
4. ALL EXPOSED EDGES SHALL BE PLANED OR SANDED TO PROVIDE SMOOTH SURFACE FREE OF ROUGH EDGES OR DEFECTS.
5. ALL EXPOSED FASTENERS SHALL BE COUNTERSUNK.
6. DOCK WASHERS SHALL BE PROVIDED BENEATH NUT OR BOLT HEAD OF ALL TIMBER BOLTED CONNECTIONS. TIMBER BOLTS SHALL BE CONSIDERED AN ACCEPTABLE ALTERNATIVE TO HEX HEADED BOLTS WITH DOCK WASHERS.
7. STANDARD WASHERS SHALL BE PERMISSIBLE WHERE CONNECTED PARTS INCLUDE STEEL PLATES, ANGLES, BRACKETS, OR BACKER PLATES.

TIMBER PILES

1. TIMBER PILES SHALL BE TROPICAL GREENHEART AND SHALL CONFORM TO ASTM D25.
2. PROVIDE PROTECTION TO PILE TIP AND BUTT TO AVOID DAMAGE DURING DRIVING.
3. PILES SHALL BE ORDERED MINIMUM 5 FT LONGER THAN TABULATED LENGTHS TO ALLOW FOR INSTALLATION VARIABILITY AND CUTOFF.
4. ALL TIMBER PILES SHALL BE DRIVEN TO THE MINIMUM EMBEDMENT OR CAPACITY CRITERIA INDICATED IN THE PILE SCHEDULE. FENDER PILES MAY BE INSTALLED TO THE REQUIRED DEPTH USING A VIBRATORY HAMMER. IN THE EVENT THAT A VIBRATORY HAMMER IS UNABLE TO ACHIEVE THE MINIMUM REQUIRED EMBEDMENT, THE CONTRACTOR WILL BE RESPONSIBLE FOR COMPLETING FINAL SET USING AN IMPACT HAMMER.
5. GREENHEART PILES SHALL BE BANDED WITH 1½ INCH STAINLESS STEEL UTILITY STRAPPING PRIOR TO CUTOFF. REFER TO DETAIL ON SHEET S-009.

ASPHALT

1. PAVING GRADES SHALL PITCH TO EXISTING STRUCTURES.
2. PAVEMENT SHALL CONSIST OF 4" OF HOT MIX ASPHALT PLACED IN TWO COURSES, SEE DETAIL.
3. CONTRACTOR TO SAW CUT PAVEMENT AT LIMIT OF REMOVAL.
4. CONTRACTOR TO PROVIDE SMOOTH TRANSITIONS BETWEEN NEW AND EXISTING ASPHALT.
5. CONTRACTOR TO SEAL JOINT BETWEEN NEW AND EXISTING ASPHALT WITH BITUMINOUS JOINT SEALANT.

GEOTEXTILE

1. GEOTEXTILE SEPARATION FABRIC SHALL BE MIRAFI FW700 OR EQUIVALENT.
2. OVERLAP ALL SEAMS MINIMUM 2 FT.
3. INSTALL PER MANUFACTURERS RECOMMENDATIONS.

STEEL PIPE PILES

1. STEEL PIPE PILES SHALL CONFORM TO ASTM A252, GRADE 3.
2. ALL PILES SHALL BE SEAMLESS.
3. AN OPEN CUTTING SHOE IS REQUIRED.
4. PIPE PILES SHALL BE COATED WITH FUSION BONDED EPOXY, COLOR BROWN. MINIMUM COATING THICKNESS SHALL BE 18-20 MIL. COATING SHALL EXTEND FROM TOP OF PILE DOWN TO MINIMUM 5-FEET BELOW GRADE.
5. DAMAGE TO ANY STEEL COATING SHALL BE TOUCHED UP BY THE CONTRACTOR USING APPROVED MATERIALS AND METHODS.
6. ALL PILES SHALL BE FILLED TO THE TOP WITH CONCRETE AFTER INSTALLATION. ROCK-SOCKETED PILES SHALL BE CLEANED OUT AND FILLED FOR THEIR ENTIRE LENGTH PRIOR TO CONCRETE FILLING. DRIVEN PILES SHALL BE CLEANED OUT TO MINIMUM 10-FEET BELOW ADJACENT MUDLINE.
7. REFER TO PILE SCHEDULE ON SHEET S-005 FOR ESTIMATED PILE LENGTHS, COATING LENGTHS, SIZES, AND SOCKETING REQUIREMENTS.

TIMBER FLOATS

1. FLOAT MANUFACTURER SHALL SUBMIT SHOP DRAWINGS AND CALCULATIONS SIGNED AND SEALED BY A MAINE LICENSED PROFESSIONAL ENGINEER. MANUFACTURER SHALL BE RESPONSIBLE FOR FINAL DETERMINATION OF FLOAT FRAMING AND DRUM LAYOUT TO MEET BOUYANCY, LOADING, AND ENVIRONMENTAL EXPOSURE REQUIREMENTS IN ACCORDANCE WITH THE SPECIFICATIONS.
2. UNLESS OTHERWISE SPECIFIED, ALL TIMBER TO BE USED SHALL BE NO. 1 AND BETTER SOUTHERN PINE AS GRADED BY SPIB AND WITH DESIGN VALUES PER NFPA NATIONAL DESIGN SPECIFICATION OR THE EQUIVALENT FOR DOUGLAS FIR AS GRADED BY WCLIB AND WWPA.
3. ALL TIMBER SHALL BE NEW AND SUPPLIED WITH NOMINAL DIMENSIONS.
4. ALL TIMBER MEMBERS TO WHICH THE PUBLIC MAY BE EXPOSED SHALL BE TREATED WITH ALKALINE COPPER QUATERNARY (ACQ) IN ACCORDANCE WITH AWPA & AWPB W/ MINIMUM RETENTION OF 0.40 LBS. PER CUBIC FOOT. ALL OTHER SOUTHERN YELLOW PINE MEMBERS SHALL BE CCA TREATED TO 2.5 PCF RETENTION.
5. DECKING SHALL BE NO. 1 SOUTHERN PINE, MINIMUM SIZE 2X6.
6. MISC. HARDWARE: GALVANIZED STEEL PLATES AND ALL BOLTS AND RELATED HARDWARE SHALL BE FASHIONED FROM STEEL AND GALVANIZED AFTER FABRICATION AND IN ACCORDANCE WITH REQUIREMENTS OF ASTM A123, AND/OR A153. BOLTS AND NUTS SHALL CONFORM TO ASTM A307.
7. CONNECTION HARDWARE SHALL BE FABRICATED FROM ASTM-A36 GRADE STEEL WITH MINIMUM THICKNESS ¼".
8. PROVIDE GUIDE/WEARING BRACKETS AT GANGWAY LANDING ON FLOAT 'C' PER DETAIL A ON SHEET S-012. BRACKETS SHALL BE LOCATED IN FIELD TO BE CENTERED ON GANGWAY RANGE OF TRAVEL AT MID-TIDE ELEVATION.
9. TRANSITIONS BETWEEN FLOATING DOCKS SHALL INCLUDE ADA COMPLIANT TRANSITION PLATES ACROSS GAPS AT HINGE LOCATIONS.
10. FLOATING DOCKS SHALL MEET THE FOLLOWING LOADING AND FREEBOARD CRITERIA:

DEAD LOAD	20 INCH FREEBOARD
20 PSF UNIFORM LIVE LOAD	MINIMUM 8 INCH FREEBOARD
40 PSF UNIFORM LIVE LOAD	MINIMUM ZERO FREEBOARD

DEAD LOADS SHALL INCLUDE ALL COMPONENTS AND ATTACHMENTS INCLUDING WEIGHT OF ALUMINUM GANGWAY BEARING ON FLOAT 'C'.

ALUMINUM GANGWAY

1. GANGWAY MANUFACTURER SHALL SUBMIT SHOP DRAWINGS AND CALCULATIONS SIGNED AND SEALED BY A MAINE LICENSED PROFESSIONAL ENGINEER. MANUFACTURER SHALL BE RESPONSIBLE FOR FINAL DETERMINATION OF GANGWAY FRAMING AND CONFIGURATION TO MEET STRUCTURAL, PERFORMANCE, AND ACCESSIBILITY REQUIREMENTS IN ACCORDANCE WITH THE SPECIFICATIONS.
2. GANGWAY SHALL MEET THE FOLLOWING LOADING AND DEFLECTION CRITERIA:
   - DEAD LOAD SHALL CONSIST OF WEIGHT OF THE ENTIRE GANGWAY STRUCTURE PLUS ANY UTILITIES AND ATTACHMENTS.
   - ALLOWABLE STRESSES IN DECK SURFACE, GANGWAY FRAMING, AND MOUNTING COMPONENTS SHALL NOT BE EXCEEDED AT A UNIFORM LIVE LOAD OF 100 PSF.
   - 50 PSF UNIFORM LIVE LOAD MAX. DEFLECTION L/360
   - 100 PSF UNIFORM LIVE LOAD MAX. DEFLECTION NOT TO EXCEED GANGWAY CAMBER
   - ALL HANDRAIL AND POSTS SHALL BE DESIGNED TO WITHSTAND A 200 LB LOAD APPLIED IN ANY DIRECTION OR A 50 LB/FT LOAD APPLIED ALONG THE HANDRAIL LENGTH.
3. GANGWAY HINGES SHALL BE CAPABLE OF TRAVELING FREELY AND WITHOUT BINDING THROUGH THE ENTIRE RANGE OF WATER LEVELS FROM MLLW TO BASE FLOOD ELEVATION PLUS TWO-FEET OF ADDITIONAL ELEVATION IN EITHER DIRECTION.

FOR PERMIT

Attention:
0 1"
If this scale bar does not measure 1" then drawing is not original scale.

STATE OF MAINE
BRIAN M. MCDEVITT
PE18260
LICENSED
PROFESSIONAL ENGINEER
6/9/2025

Designed:	DJB
Drawn:	JAM
Checked:	BJB
Approved:	BMM
P.E. No:	13033
GEI Project	2203703

GEI Consultants
GEI CONSULTANTS, INC.
5 MILK STREET
PORTLAND, ME 04101
(207)797-8901

UNE
UNIVERSITY OF NEW ENGLAND
11 HILLS BEACH RD.
BIDDEFORD, MAINE

UNIVERSITY OF NEW ENGLAND MARINE SCIENCE CENTER PIER

11 HILLS BEACH ROAD
BIDDEFORD, YORK COUNTY, MAINE

NO	DATE	ISSUE/REVISION	APP
8	6/5/2025	ADDRESS PB COMMENTS	DJB
7	4/16/2025	BIDDEFORD PERMIT APP.	DJB
6	9/17/2024	REVISED PERMIT SET	DJB
5	6/27/2024	REVISED PERMIT SET	DJB
4	9/14/2023	DEP PERMIT SET	DJB
3	6/28/2023	75% DESIGN SUBMISSION	DJB
2	2/15/2023	30% DESIGN SUBMISSION	DJB
1	12/9/2022	15% DESIGN SUB REV	DJB
0	11/11/2022	15% DESIGN SUBMISSION	DJB

SHEET NAME
GENERAL NOTES

SHEET NO.
G-002

DIGASTELNJOVO, VINNIE B:\Working\UNIVERSITY OF NEW ENGLAND\2203703 UNE Marine Science Center Pier\00_CAD\Design\Sheets\2203703-G-002.dwg - 6/9/2025



0 200 400
SCALE, FEET

FOR PERMIT

Attention:
0 1"
If this scale bar does not measure 1" then drawing is not original scale.

STATE OF MAINE
BRIAN M. MCDEVITT
PE18260
LICENSED
PROFESSIONAL ENGINEER
6/9/2025

Designed:	DJB
Drawn:	JAM
Checked:	BJB
Approved:	BMM
P.E. No:	13033
GEI Project	2203703

GEI Consultants
GEI CONSULTANTS, INC.
5 MILK STREET
PORTLAND, ME 04101
(207)797-8901

UNE
UNIVERSITY OF NEW ENGLAND
11 HILLS BEACH RD.
BIDDEFORD, MAINE

UNIVERSITY OF NEW ENGLAND MARINE SCIENCE CENTER PIER

11 HILLS BEACH ROAD
BIDDEFORD, YORK COUNTY, MAINE

NO	DATE	ISSUE/REVISION	APP
8	6/5/2025	ADDRESS PB COMMENTS	DJB
7	4/16/2025	BIDDEFORD PERMIT APP.	DJB
6	9/17/2024	REVISED PERMIT SET	DJB
5	6/27/2024	REVISED PERMIT SET	DJB
4	9/14/2023	DEP PERMIT SET	DJB
3	6/28/2023	75% DESIGN SUBMISSION	DJB
2	2/15/2023	30% DESIGN SUBMISSION	DJB
1	12/9/2022	15% DESIGN SUB REV	DJB
0	11/11/2022	15% DESIGN SUBMISSION	DJB

SHEET NAME: **VICINITY PLAN**

SHEET NO.: **G-003**

DICASTELNUOVO, VINNIE B:\Working\UNIVERSITY OF NEW ENGLAND\2203703 UNE Marine Science Center Pier\00_CAD\Design\Sheets\2203703-G-003.dwg - 6/8/2025

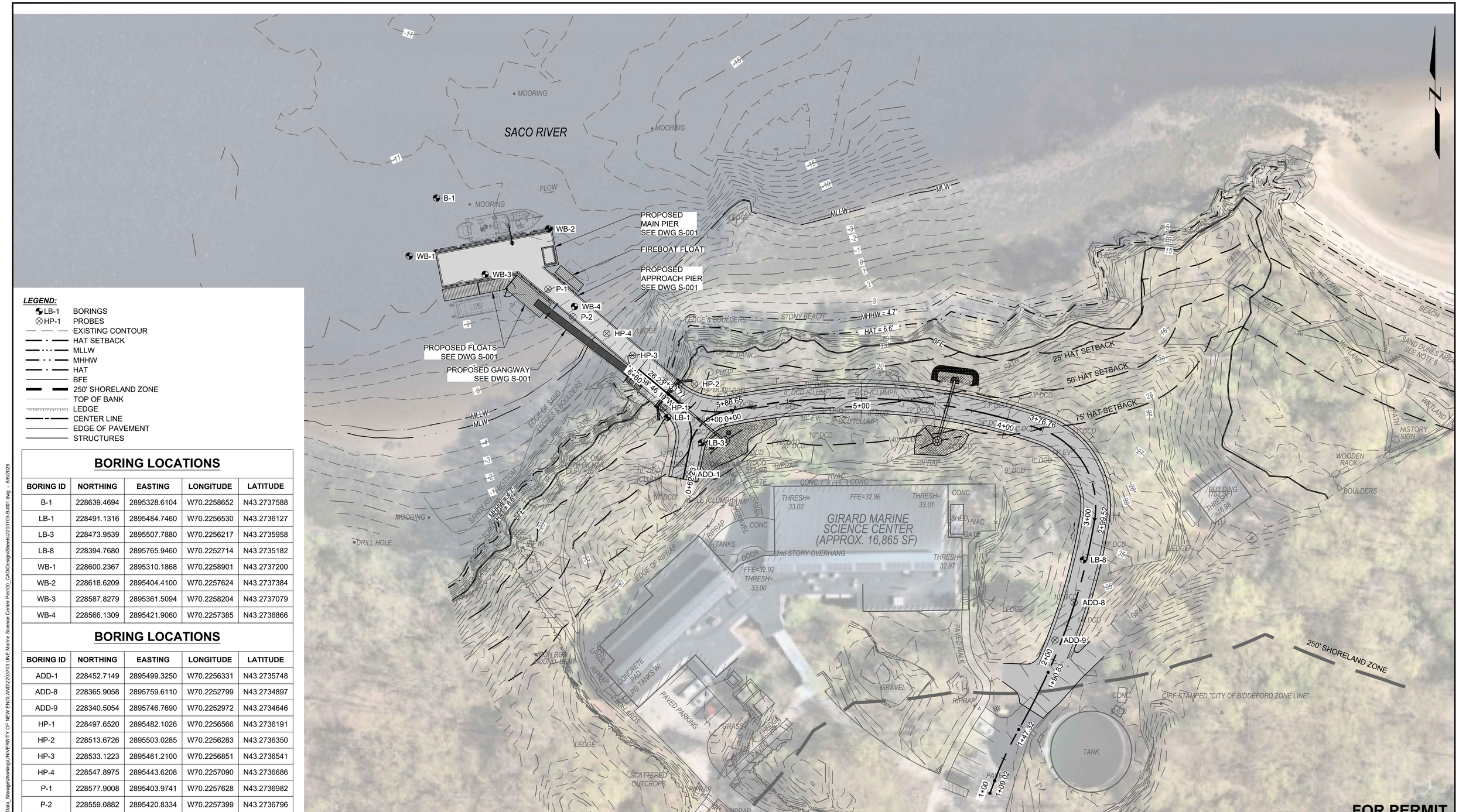

LEGEND:

- LB-1 BORINGS
- HP-1 PROBES
- EXISTING CONTOUR
- HAT SETBACK
- MLLW
- MHHW
- HAT
- BFE
- 250' SHORELAND ZONE
- TOP OF BANK
- LEDGE
- CENTER LINE
- EDGE OF PAVEMENT
- STRUCTURES

BORING LOCATIONS

BORING ID	NORTHING	EASTING	LONGITUDE	LATITUDE
B-1	228639.4694	2895328.6104	W70.2258652	N43.2737588
LB-1	228491.1316	2895484.7460	W70.2256530	N43.2736127
LB-3	228473.9539	2895507.7880	W70.2256217	N43.2735958
LB-8	228394.7680	2895765.9460	W70.2252714	N43.2735182
WB-1	228600.2367	2895310.1868	W70.2258901	N43.2737200
WB-2	228618.6209	2895404.4100	W70.2257624	N43.2737384
WB-3	228587.8279	2895361.5094	W70.2258204	N43.2737079
WB-4	228566.1309	2895421.9060	W70.2257385	N43.2736866

BORING LOCATIONS

BORING ID	NORTHING	EASTING	LONGITUDE	LATITUDE
ADD-1	228452.7149	2895499.3250	W70.2256331	N43.2735748
ADD-8	228365.9058	2895759.6110	W70.2252799	N43.2734897
ADD-9	228340.5054	2895746.7690	W70.2252972	N43.2734646
HP-1	228497.6520	2895482.1026	W70.2256566	N43.2736191
HP-2	228513.6726	2895503.0285	W70.2256283	N43.2736350
HP-3	228533.1223	2895461.2100	W70.2256851	N43.2736541
HP-4	228547.8975	2895443.6208	W70.2257090	N43.2736686
P-1	228577.9008	2895403.9741	W70.2257628	N43.2736982
P-2	228559.0882	2895420.8334	W70.2257399	N43.2736796

ELEVATION	MLLW	NAVD88*
BFE	+19.0	+14.0
HAT	+11.6	+6.6
MHHW	+9.7	+4.7
MHW	+9.3	+4.3
MSL	+4.8	-0.2
MLW	+0.3	-4.7
MLLW	0.0	-5.0

*PROJECT DATUM

0 30 60
SCALE, FEET

Attention:
0 1"
If this scale bar does not measure 1" then drawing is not original scale.

STATE OF MAINE
BRIAN M. MCDEVITT
PE18260
LICENSED
PROFESSIONAL ENGINEER
6/9/2025

Designed:	DJB
Drawn:	JAM
Checked:	BJB
Approved:	BMM
P.E. No:	13033
GEI Project	2203703

GEI Consultants
GEI CONSULTANTS, INC.
5 MILK STREET
PORTLAND, ME 04101
(207)797-8901

UNE
UNIVERSITY OF NEW ENGLAND
11 HILLS BEACH RD.
BIDDEFORD, MAINE

UNIVERSITY OF NEW ENGLAND MARINE SCIENCE CENTER PIER

11 HILLS BEACH ROAD
BIDDEFORD, YORK COUNTY, MAINE

NO	DATE	ISSUE/REVISION	APP
8	6/5/2025	ADDRESS PB COMMENTS	DJB
7	4/16/2025	BIDDEFORD PERMIT APP.	DJB
6	9/17/2024	REVISED PERMIT SET	DJB
5	6/27/2024	REVISED PERMIT SET	DJB
4	9/14/2023	DEP PERMIT SET	DJB
3	6/28/2023	75% DESIGN SUBMISSION	DJB
2	2/15/2023	30% DESIGN SUBMISSION	DJB
1	12/9/2022	15% DESIGN SUB REV	DJB
0	11/11/2022	15% DESIGN SUBMISSION	DJB

SHEET NAME
BORING LOCATION PLAN

SHEET NO.
B-001

FOR PERMIT

DJCASTELNUOVO, VINNIE \\geiconsultants.com\data\Data_Storage\Working\UNIVERSITY OF NEW ENGLAND\2203703 UNE Marine Science Center Pier\00_CAD\Design\Sheets\2203703-B-001.dwg - 6/6/2025

DICASTELNUOVO, VINNIE \\gzaconsultants.com\data\Data_Storage\Working\UNIVERSITY OF NEW ENGLAND\2203703 UNE Marine Science Center Pier\00_CAD\Design\Sheets\2203703-B-002.dwg - 6/6/2025

TEST BORING LOG

GZA GeoEnvironmental, Inc. — Engineers and Scientists

University of New England, Marine Science Center Pier, Biddeford, Maine

EXPLORATION NO.: B-1
SHEET: 1 of 3
PROJECT NO: 09.0025897.00
REVIEWED BY:

Logged By: B. Cardali
Drilling Co.: New England Boring
Foreman: Brad Enos

Type of Rig: Barge
Rig Model:
Drilling Method: Rod Prob

Boring Location: See Plan
Ground Surface Elev. (ft.): -10.6
Final Boring Depth (ft.): 65.8
Date Start - Finish: 11/9/2015 - 11/10/2015

H. Datum:
V. Datum: NAVD 88

Hammer Type: Safety
Hammer Weight (lb.): 140
Hammer Fall (in.): 30
Auger or Casing O.D./I.D Dia (in.):

Sampler Type: SS
Sampler O.D. (in.): 2.0
Sampler Length (in.): 24
Rock Core Size: NQ

Groundwater Depth (ft.)

Date	Time	Water Depth	Stab. Time

Depth (ft.)	Casing Blows/ Core Rate	Sample No.	Sample Depth (ft.)	Sample Pen. (in.)	Sample Rec. (in.)	Sample Blows (per 6 in.)	SPT Value	Sample Description and Identification (Modified Burmister Procedure)	Remarks	Field Test Data	Depth (ft.)	Stratum Description	Elev. (ft.)
0													
	3	S-1	0-2	24	5	1 2	3	S-1: Very loose, brown, fine to coarse SAND, trace Silt.					
	4					1 2							
	6												
	9												
	16												
5	5	S-2	5-7	24	4	3 2	4	S-2: Loose, brown, fine to coarse SAND, trace Silt.					
	6					2 2							
	9												
	11												
	10												
10	8	S-3	10-12	24	3	1 2	4	S-3: Loose, brown, fine to coarse SAND, trace Silt.					
	6					2 2							
	8												SAND
	13												
	19												
	7	S-4	15-17	24	8	2 2	4	S-4: Loose, brown, fine to coarse SAND, trace Silt.					
15	15					2 4							
	28												
	35												
	31										19.6		-29.1
	OPEN	S-5	20-22	24	17	7 3	4	S-5: Medium Stiff, gray, Silty CLAY, little fine Sand.		1			
20						1 2							
		S-6	25-27	24	24	2 1	3	S-6: Soft, gray, Silty CLAY, little fine Sand.					SILTY CLAY
25						2 1							
30													

REMARKS

1 - 4" casing installed to 20.0' below mudline (bml), then wash ahead to 51.0' bml.

See Log Key for exploration of sample description and identification procedures. Stratification lines represent approximate boundaries between soil and bedrock types. Actual transitions may be gradual. Water level readings have been made at the times and under the conditions stated. Fluctuations of groundwater may occur due to other factors than those present at the times the measurements were made.

Exploration No.: B-1

GZA_TEMPLATE TEST BORING_12/7/2015, 1:02:01 PM

TEST BORING LOG

GZA GeoEnvironmental, Inc. — Engineers and Scientists

University of New England, Marine Science Center Pier, Biddeford, Maine

EXPLORATION NO.: B-1
SHEET: 2 of 3
PROJECT NO: 09.0025897.00
REVIEWED BY:

Logged By: B. Cardali
Drilling Co.: New England Boring
Foreman: Brad Enos

Type of Rig: Barge
Rig Model:
Drilling Method: Drive and Wash

Boring Location: See Plan
Ground Surface Elev. (ft.): -10.6
Final Boring Depth (ft.): 65.8
Date Start - Finish: 11/9/2015 - 11/10/2015

H. Datum:
V. Datum: NAVD 88

Hammer Type: Safety
Hammer Weight (lb.): 140
Hammer Fall (in.): 30
Auger or Casing O.D./I.D Dia (in.):

Sampler Type: SS
Sampler O.D. (in.): 2.0
Sampler Length (in.): 24
Rock Core Size: NQ

Groundwater Depth (ft.)

Date	Time	Water Depth	Stab. Time

Depth (ft.)	Casing Blows/ Core Rate	Sample No.	Sample Depth (ft.)	Sample Pen. (in.)	Sample Rec. (in.)	Sample Blows (per 6 in.)	SPT Value	Sample Description and Identification (Modified Burmister Procedure)	Remarks	Field Test Data	Depth (ft.)	Stratum Description	Elev. (ft.)
35													
		S-7	40-42	24	24	WOR		S-7: Very soft, gray, Silty CLAY, trace fine Sand.					
						WOR	0						
						WOH							
40						WOH						SILTY CLAY	
45													
	16	S-8	51-53	24	8	18 6		S-8: Medium dense, gray, fine to coarse SAND, some Gravel, trace Silty Clay.			51		-41.6
50	13					15 29	21			2			
	30												
	26												
	27												
	38	S-9	56-58	24	5	10 19		S-9: Dense, gray, GRAVEL, some fine to coarse Sand, trace Silty Clay.				GLACIAL TILL	
55	24					27 24	46						
	29												
	9												
60													

REMARKS

2 - Advanced 3" casing to 61.6' bml to core bedrock.

See Log Key for exploration of sample description and identification procedures. Stratification lines represent approximate boundaries between soil and bedrock types. Actual transitions may be gradual. Water level readings have been made at the times and under the conditions stated. Fluctuations of groundwater may occur due to other factors than those present at the times the measurements were made.

Exploration No.: B-1

GZA_TEMPLATE TEST BORING_12/7/2015, 1:02:01 PM

TEST BORING LOG

GZA GeoEnvironmental, Inc. — Engineers and Scientists

University of New England, Marine Science Center Pier, Biddeford, Maine

EXPLORATION NO.: B-1
SHEET: 3 of 3
PROJECT NO: 09.0025897.00
REVIEWED BY:

Logged By: B. Cardali
Drilling Co.: New England Boring
Foreman: Brad Enos

Type of Rig: Barge
Rig Model:
Drilling Method: Drive and Wash

Boring Location: See Plan
Ground Surface Elev. (ft.): -10.6
Final Boring Depth (ft.): 65.8
Date Start - Finish: 11/9/2015 - 11/10/2015

H. Datum:
V. Datum: NAVD 88

Hammer Type: Safety
Hammer Weight (lb.): 140
Hammer Fall (in.): 30
Auger or Casing O.D./I.D Dia (in.):

Sampler Type: SS
Sampler O.D. (in.): 2.0
Sampler Length (in.): 24
Rock Core Size: NQ

Groundwater Depth (ft.)

Date	Time	Water Depth	Stab. Time

Depth (ft.)	Casing Blows/ Core Rate	Sample No.	Sample Depth (ft.)	Sample Pen. (in.)	Sample Rec. (in.)	Sample Blows (per 6 in.)	SPT Value	Sample Description and Identification (Modified Burmister Procedure)	Remarks	Field Test Data	Depth (ft.)	Stratum Description	Elev. (ft.)
60													
												GLACIAL TILL	
											61.6		-73.2
		C-1	61.6-61.7	32	32			C-1: Hard, fresh, fine grained, gray, GNEISS. Joints are very close to closely spaced, moderately dipping, planar, rough, fresh to discolored. RQD = 31%	3				
65												GNEISS	
		C-2	64.3-65.8	18	18			C-2: Hard, fresh, fine grained, gray, GNEISS. Joints are extremely close to closely spaced, moderately dipping to high angle, planar, rough to smooth, fresh to discolored. RQD = 0%			65.8		-79.4
								End of exploration at 65.8 feet.					
70													
75													
80													
85													
90													

REMARKS

3 - Casing refusal at 61.6' bml. Set up to core.

See Log Key for exploration of sample description and identification procedures. Stratification lines represent approximate boundaries between soil and bedrock types. Actual transitions may be gradual. Water level readings have been made at the times and under the conditions stated. Fluctuations of groundwater may occur due to other factors than those present at the times the measurements were made.

Exploration No.: B-1

GZA_TEMPLATE TEST BORING_12/7/2015, 1:02:01 PM

2015 BORING B-1

TEST BORING LOG

GZA GeoEnvironmental, Inc. — Engineers and Scientists

University of New England, Marine Science Center Pier, Biddeford, Maine

EXPLORATION NO.: P-1
SHEET: 1 of 2
PROJECT NO: 09.0025897.00
REVIEWED BY:

Logged By: B Cardali
Drilling Co.: New England Boring
Foreman: Brad Enos

Type of Rig: Barge
Rig Model:
Drilling Method: Rod Prob

Boring Location: See Plan
Ground Surface Elev. (ft.): -10.2
Final Boring Depth (ft.): 52.3
Date Start - Finish: 11/10/2015 - 11/10/2015

H. Datum:
V. Datum: NAVD 88

Hammer Type: Safety
Hammer Weight (lb.): 300
Hammer Fall (in.): 24
Auger or Casing O.D./I.D Dia (in.):

Sampler Type:
Sampler O.D. (in.):
Sampler Length (in.):
Rock Core Size:

Groundwater Depth (ft.)

Date	Time	Water Depth	Stab. Time

Depth (ft.)	Casing Blows/ Core Rate	Sample No.	Sample Depth (ft.)	Sample Pen. (in.)	Sample Rec. (in.)	Sample Blows (per 6 in.)	SPT Value	Sample Description and Identification (Modified Burmister Procedure)	Remarks	Field Test Data	Depth (ft.)	Stratum Description	Elev. (ft.)
0													
	3												
	3												
	6												
	10												
5	9												
	6												
	6												
	7												
	15												
10	16												
	8												
	7												
	13												
	37												
15	19												
	15												
	13												
	22												
	12												
20	16												
	14												
	12												
	25												
	21												
25	18												
	17												
30													

REMARKS

1 - Possible transition to Silty Clay at approximately 17.0' below mudline (bml) (El. -26.9'), based on increased driving resistance to advance probe.

See Log Key for exploration of sample description and identification procedures. Stratification lines represent approximate boundaries between soil and bedrock types. Actual transitions may be gradual. Water level readings have been made at the times and under the conditions stated. Fluctuations of groundwater may occur due to other factors than those present at the times the measurements were made.

Exploration No.: P-1

GZA_TEMPLATE TEST BORING_12/7/2015, 1:02:02 PM

TEST BORING LOG

GZA GeoEnvironmental, Inc. — Engineers and Scientists

University of New England, Marine Science Center Pier, Biddeford, Maine

EXPLORATION NO.: P-1
SHEET: 2 of 2
PROJECT NO: 09.0025897.00
REVIEWED BY:

Logged By: B Cardali
Drilling Co.: New England Boring
Foreman: Brad Enos

Type of Rig: Barge
Rig Model:
Drilling Method: Rod Probe

Boring Location: See Plan
Ground Surface Elev. (ft.): -10.2
Final Boring Depth (ft.): 52.3
Date Start - Finish: 11/10/2015 - 11/10/2015

H. Datum:
V. Datum: NAVD 88

Hammer Type: Safety
Hammer Weight (lb.): 300
Hammer Fall (in.): 24
Auger or Casing O.D./I.D Dia (in.):

Sampler Type:
Sampler O.D. (in.):
Sampler Length (in.):
Rock Core Size:

Groundwater Depth (ft.)

Date	Time	Water Depth	Stab. Time

Depth (ft.)	Casing Blows/ Core Rate	Sample No.	Sample Depth (ft.)	Sample Pen. (in.)	Sample Rec. (in.)	Sample Blows (per 6 in.)	SPT Value	Sample Description and Identification (Modified Burmister Procedure)	Remarks	Field Test Data	Depth (ft.)	Stratum Description	Elev. (ft.)
35	24												
	18												
	19												
	20												
	28												
40	20												
	26												
	24												
	30												
	34												
45	52												
	37												
	33												
	34												
	54												
50	46												
	55												
	50												
	50												
	18												
55	50/3"												
60													

REMARKS

2 - Possible transition to Glacial Till at approximately 42.0' bml (El. -51.9').
3 - Probe refusal at 52.3' bml (El. -62.2').

See Log Key for exploration of sample description and identification procedures. Stratification lines represent approximate boundaries between soil and bedrock types. Actual transitions may be gradual. Water level readings have been made at the times and under the conditions stated. Fluctuations of groundwater may occur due to other factors than those present at the times the measurements were made.

Exploration No.: P-1

GZA_TEMPLATE TEST BORING_12/7/2015, 1:02:02 PM

2015 PROBE P-1

TEST BORING LOG

GZA GeoEnvironmental, Inc. — Engineers and Scientists

University of New England, Marine Science Center Pier, Biddeford, Maine

EXPLORATION NO.: P-2
SHEET: 1 of 2
PROJECT NO: 09.0025897.00
REVIEWED BY:

Logged By: B Cardali
Drilling Co.: New England Boring
Foreman: Brad Enos

Type of Rig: Barge
Rig Model:
Drilling Method: Rod Probe

Boring Location: See Plan
Ground Surface Elev. (ft.): -7.3
Final Boring Depth (ft.): 54.2
Date Start - Finish: 11/10/2015 - 11/10/2015

H. Datum:
V. Datum: NAVD 88

Hammer Type: Safety
Hammer Weight (lb.): 300
Hammer Fall (in.): 24
Auger or Casing O.D./I.D Dia (in.):

Sampler Type:
Sampler O.D. (in.):
Sampler Length (in.):
Rock Core Size:

Groundwater Depth (ft.)

Date	Time	Water Depth	Stab. Time

Depth (ft.)	Casing Blows/ Core Rate	Sample No.	Sample Depth (ft.)	Sample Pen. (in.)	Sample Rec. (in.)	Sample Blows (per 6 in.)	SPT Value	Sample Description and Identification (Modified Burmister Procedure)	Remarks	Field Test Data	Depth (ft.)	Stratum Description	Elev. (ft.)
0	1												
	1												
	1												
	3												
	6												
5	4												
	3												
	8												
	22												
	9												
10	5												
	2												
	3												
	5												
	4												
15	5												
	6												
	5												
	7												
	5												
20	10												
	18												
	19												
	21												
	15												
25	13												
	14												
	30												
	29												
	26												
30													

REMARKS

1 - Upon retrieval of probe rods, bottom 30' of rods was bent at an angle approximately 30-45 degrees off of the vertical indicating possible sloping rock at approximately 30.0' bml (El. 37.3').

See Log Key for exploration of sample description and identification procedures. Stratification lines represent approximate boundaries between soil and bedrock types. Actual transitions may be gradual. Water level readings have been made at the times and under the conditions stated. Fluctuations of groundwater may occur due to other factors than those present at the times the measurements were made.

Exploration No.: P-2

GZA_TEMPLATE TEST BORING_12/7/2015, 1:02:04 PM

TEST BORING LOG

GZA GeoEnvironmental, Inc. — Engineers and Scientists

University of New England, Marine Science Center Pier, Biddeford, Maine

EXPLORATION NO.: P-2
SHEET: 2 of 2
PROJECT NO: 09.0025897.00
REVIEWED BY:

Logged By: B Cardali
Drilling Co.: New England Boring
Foreman: Brad Enos

Type of Rig: Barge
Rig Model:
Drilling Method: Rod Probe

Boring Location: See Plan
Ground Surface Elev. (ft.): -7.3
Final Boring Depth (ft.): 54.2
Date Start - Finish: 11/10/2015 - 11/10/2015

H. Datum:
V. Datum: NAVD 88

Hammer Type: Safety
Hammer Weight (lb.): 300
Hammer Fall (in.): 24
Auger or Casing O.D./I.D Dia (in.):

Sampler Type:
Sampler O.D. (in.):
Sampler Length (in.):
Rock Core Size:

Groundwater Depth (ft.)

Date	Time	Water Depth	Stab. Time

Depth (ft.)	Casing Blows/ Core Rate	Sample No.	Sample Depth (ft.)	Sample Pen. (in.)	Sample Rec. (in.)	Sample Blows (per 6 in.)	SPT Value	Sample Description and Identification (Modified Burmister Procedure)	Remarks	Field Test Data	Depth (ft.)	Stratum Description	Elev. (ft.)
35	23								1				
	19												
	37												
	39												
	34												
40	42												
	31												
	40												
	36												
	41												
45	38												
	46												
	43												
	55												
	52												
50	52												
	40												
	37												
	38												
	41												
55	65								2				
	91												
	78												
	50												
	75												
60	100/2"												

REMARKS

2 - Probe refusal at 54.2' bml (El. -61.5').

See Log Key for exploration of sample description and identification procedures. Stratification lines represent approximate boundaries between soil and bedrock types. Actual transitions may be gradual. Water level readings have been made at the times and under the conditions stated. Fluctuations of groundwater may occur due to other factors than those present at the times the measurements were made.

Exploration No.: P-2

GZA_TEMPLATE TEST BORING_12/7/2015, 1:02:04 PM

2015 PROBE P-2

FOR PERMIT

ELEVATION	MLLW	NAVD88*
BFE	+19.0	+14.0
HAT	+11.6	+6.6
MHHW	+9.7	+4.7
MHW	+9.3	+4.3
MSL	+4.8	-0.2
MLW	+0.3	-4.7
MLLW	0.0	-5.0

*PROJECT DATUM

Attention:
0 1"
If this scale bar does not measure 1" then drawing is not original scale.

STATE OF MAINE — BRIAN M. MCDEVITT — PE18260 — LICENSED PROFESSIONAL ENGINEER
6/9/2025

Designed:	DJB
Drawn:	JAM
Checked:	BJB
Approved:	BMM
P.E. No:	13033
GEI Project	2203703

GEI Consultants
GEI CONSULTANTS, INC.
5 MILK STREET
PORTLAND, ME 04101
(207)797-8901

UNIVERSITY OF NEW ENGLAND
11 HILLS BEACH RD.
BIDDEFORD, MAINE

UNIVERSITY OF NEW ENGLAND MARINE SCIENCE CENTER PIER

11 HILLS BEACH ROAD
BIDDEFORD, YORK COUNTY, MAINE

NO	DATE	ISSUE/REVISION	APP
8	6/5/2025	ADDRESS PB COMMENTS	DJB
7	4/16/2025	BIDDEFORD PERMIT APP.	DJB
6	9/17/2024	REVISED PERMIT SET	DJB
5	6/27/2024	REVISED PERMIT SET	DJB
4	9/14/2023	DEP PERMIT SET	DJB
3	6/28/2023	75% DESIGN SUBMISSION	DJB
2	2/15/2023	30% DESIGN SUBMISSION	DJB
1	12/9/2022	15% DESIGN SUB REV	DJB
0	11/11/2022	15% DESIGN SUBMISSION	DJB

SHEET NAME
BORING LOGS (SHEET 1 OF 3)

SHEET NO.
B-002

BORING INFORMATION
NORTHING (ft): 228,600 | EASTING (ft): 2,895,310
GROUND SURFACE EL. (ft): -10.1 | DATE START/END: 12/12/2022 - 12/13/2022
VERT./HORZ. DATUMS: NAVD 88/NAD83 ME West Zone | DRILLING COMPANY: New England Boring
TOTAL DEPTH (ft): 70.0 | DRILLER NAME: B. Enos
LOGGED BY: K. Gleichauf | RIG TYPE: CME 21

BORING WB-1 PAGE 1 OF 3

DRILLING INFORMATION
HAMMER TYPE: Safety Hammer - rope and cathead | CASING I.D./O.D.: 4 inch/ 4.5 inch | CORE BARREL TYPE: NX
AUGER I.D./O.D.: NA / NA | DRILL ROD O.D.: NM | CORE BARREL I.D./O.D.: 1.8 inch / 3 inch
DRILLING METHOD: Drive and Wash/Open Hole
WATER LEVEL DEPTHS (ft): water boring

ABBREVIATIONS: Pen. = Penetration Length; Rec. = Recovery Length; RQD = Rock Quality Designation (Sum of lengths of core pieces>4 in / Pen., %); WOH = Weight of Rods; WOH = Weight of Hammer; S = Split Spoon Sample; C = Core Sample; U = Undisturbed Sample; G = Grab Sample; DP = Direct Push Sample; HSA = Hollow-Stem Auger; Qp = Pocket Penetrometer Strength; Sv = Pocket Torvane Shear Strength; LL = Liquid Limit; PL = Plastic Limit; PID = Photoionization Detector; I.D./O.D. = Inside Diameter/Outside Diameter; NA, NM = Not Applicable, Not Measured; Blows per 6 in. : 140-lb hammer falling 30 inches to drive a 2-inch-O.D. split spoon sampler.

Elev. (ft)	Depth (ft)	Sample No.	Depth (ft)	Pen./ Rec. (in)	Blows per 6 in. or RQD	Drilling Remarks/ Field Test Data	Layer Name	Soil and Rock Description
	0	S1	0 to 2	24/2	WOR-WOH/18"		SAND/SILT	S1: NARROWLY GRADED GRAVEL WITH SAND (GP); ~80% coarse gravel (one piece), ~20% fine to coarse sand. Dark Gray.
	5	S2	5.5 to 7.5	24/9	5-3-4-6	Sand and shells in wash 0-5'.		S2: WIDELY GRADED SAND (SW); ~95% fine to coarse sand, ~5% nonplastic fines, gray. shells.
-20	10	S3	10.5 to 12.5	24/8	1-1-3-4	Sand and wood in wash 5.5-10.5'.		S3: WIDELY GRADED SAND (SW); Similar to S2.
	15	S4	15.5 to 17.5	24/9	3-4-2-WOH			S4: WIDELY GRADED SAND (SW); Similar to S2. pieces of wood.
-30	20	S5	20.5 to 22.5	24/24	2-1-1-2	Qp= 0.5 tsf (0-3') Sv= 2.5 tsf (0-3') Qp= 0.25 tsf (3-24") Sv= 1.5 tsf (3-24")	CLAY	S5: LEAN CLAY (CL); ~95% low plasticity fines, ~5% fine sand. Gray; Shells (0-10"). Sand seam at 20".

NOTES:
PROJECT NAME: UNE Marine Science Center Pier
CITY/STATE: Biddeford, Maine
GEI PROJECT NUMBER: 2203703

BORING WB-1 PAGE 2 OF 3

Elev. (ft)	Depth (ft)	Sample No.	Depth (ft)	Pen./ Rec. (in)	Blows per 6 in. or RQD	Drilling Remarks/ Field Test Data	Layer Name	Soil and Rock Description
-40	30	S6	25.5 to 27.5	24/24	WOR-WOH/18"	Drove 4" casing to 25.5'. Drilled open hole 25.5-45.5'. Drove casing with 3" casing from 45.5' to top of rock. Qp= 0.25 tsf Sv= 1.5 tsf	CLAY	S6: LEAN CLAY (CL); ~95% low plasticity fines, ~5% fine sand. Gray.
		S7	30.5 to 32.5	24/24	WOR/18"-2	Qp= 0.25 tsf Sv= 1.5 tsf		S7: LEAN CLAY (CL); Similar to S6.
-50	40	S8	35.5 to 37.5	24/24	WOR/18"-WOH	Qp= 0.25 tsf Sv= 1.5 tsf		S8: LEAN CLAY (CL); Similar to S6.
	45	S9	40.5 to 42.5	24/24	WOR/18"-WOH	Qp= 0.25 tsf Sv= 1.5 tsf		S9: LEAN CLAY (CL); Similar to S6.
-60	50	S10	45.5 to 47.5	24/24	WOR/18"-3	Qp= 0.5 tsf Sv= 1.5 tsf		S10: SANDY LEAN CLAY (CL); ~70% low plasticity fines, ~30% fine sand. Gray. Layered sand and clay.
						Casing hard driving starting at 49.7'.	TILL	
	55	S11	50.5 to 52.5	24/4	14-14-16-22			S11: CLAYEY GRAVEL WITH SAND (GC); ~50% fine to coarse gravel, ~30% fine to coarse sand, ~20% low plasticity fines. Gray.

NOTES:
PROJECT NAME: UNE Marine Science Center Pier
CITY/STATE: Biddeford, Maine
GEI PROJECT NUMBER: 2203703

BORING WB-1 PAGE 3 OF 3

Elev. (ft)	Depth (ft)	Sample No.	Depth (ft)	Pen./ Rec. (in)	Blows per 6 in. or RQD	Drilling Remarks/ Field Test Data	Layer Name	Soil and Rock Description
-70	60	S12	55.5 to 57.4	11/6	37-50/5"		TILL	S11: WIDELY GRADED GRAVEL WITH SAND AND CLAY (GW-GC); ~60% fine to coarse gravel, ~30% fine to coarse sand, ~10% low plasticity fines. Gray.
		C1	57.4 to 59.3	35/35	0	Core Times (min/ft): 4-6-6/0.9' C1 jammed at 2.9'.		C1: GNEISS, Dark Gray with white banding, hard to med. hard. Slightly weathered (0-24"), highly weathered (24-35"). Joints at 75 to 90 degrees. Highly fractured.
		C2	59.3 to 60.8	18/18	0	Core Times (min/ft): 4/0.5'-1/0.5'-4/0.5' C2 jammed at 0.5, 1.5'.		C2: GNEISS. Similar to C1. Highly weathered (0-10"), moderately weathered (10-18"), dissolved quartz bands.
-80	70	C3	60.8 to 65.8	60/60	71	Core Times (min/ft): 7/1.2'-2/0.8'-4-4/0.7'-2/0.3'-6 C3 jammed at 1.2, 3.7'.	ROCK	C3: GNEISS, hard. Fresh throughout. joints spaced 1-19" at 0 to 60 degrees.
		C4	65.8 to 70	50/36	24	Core Times (min/ft): 6-5-5-3/1.2'		C4: GNEISS. Fresh (0-12"). Moderately weathered and highly fractured (12-36").
-90	80							Bottom of boring at depth 70 ft.

NOTES:
PROJECT NAME: UNE Marine Science Center Pier
CITY/STATE: Biddeford, Maine
GEI PROJECT NUMBER: 2203703

2022 BORING WB-1

BORING INFORMATION
NORTHING (ft): 228,619 | EASTING (ft): 2,895,396
GROUND SURFACE EL. (ft): -11.6 | DATE START/END: 12/7/2022 - 12/8/2022
VERT./HORZ. DATUMS: NAVD 88/NAD83 ME West Zone | DRILLING COMPANY: New England Boring
TOTAL DEPTH (ft): 68.4 | DRILLER NAME: B. Enos
LOGGED BY: K. Gleichauf | RIG TYPE: CME 21

BORING WB-2 PAGE 1 OF 3

DRILLING INFORMATION
HAMMER TYPE: Safety Hammer - rope and cathead | CASING I.D./O.D.: 4 inch/ 4.5 inch | CORE BARREL TYPE: NX
AUGER I.D./O.D.: NA / NA | DRILL ROD O.D.: NM | CORE BARREL I.D./O.D.: 1.8 inch / 3 inch
DRILLING METHOD: Drive and Wash/Open Hole
WATER LEVEL DEPTHS (ft): water boring

ABBREVIATIONS: Pen. = Penetration Length; Rec. = Recovery Length; RQD = Rock Quality Designation (Sum of lengths of core pieces>4 in / Pen., %); WOH = Weight of Rods; WOH = Weight of Hammer; S = Split Spoon Sample; C = Core Sample; U = Undisturbed Sample; G = Grab Sample; DP = Direct Push Sample; HSA = Hollow-Stem Auger; Qp = Pocket Penetrometer Strength; Sv = Pocket Torvane Shear Strength; LL = Liquid Limit; PL = Plastic Limit; PID = Photoionization Detector; I.D./O.D. = Inside Diameter/Outside Diameter; NA, NM = Not Applicable, Not Measured; Blows per 6 in. : 140-lb hammer falling 30 inches to drive a 2-inch-O.D. split spoon sampler.

Elev. (ft)	Depth (ft)	Sample No.	Depth (ft)	Pen./ Rec. (in)	Blows per 6 in. or RQD	Drilling Remarks/ Field Test Data	Layer Name	Soil and Rock Description
	0	S1	0 to 2	24/0	WOH/12"-2-2		SAND/SILT	S1: No recovery. Redrove 3" spoon. S1 (redrive): WIDELY GRADED SAND (SW); ~95% fine to coarse sand, ~5% nonplastic fines. Gray. Shells.
	5	S2	4 to 6	24/5	6-4-4-9			S2: WIDELY GRADED SAND (SW); Similar to S1.
-20	10	S3	9 to 11	24/0	1-2-3-4			S3: No recovery. Redrove 3" spoon. S3 (redrive): No recovery. Probable loose sand. Split spoon returned clean. Sand and shells in wash.
	15	S4	14 to 16	24/0	1-2-2-3			S4: No Recovery. Redrove 3" spoon. S4 (redrive): NARROWLY GRADED GRAVEL (GP); ~100% coarse gravel. Probable wash material. gravel is clean.
-30	20	S5	19 to 21	24/11	10-7-6-28			S5: SANDY SILT (ML); ~ 60% nonplastic fines, ~40% fine sand. Gray. Traces of wood. Organic odor.
						Clay in wash. Driller noted reduced resistance.	CLAY	

NOTES:
PROJECT NAME: UNE Marine Science Center Pier
CITY/STATE: Biddeford, Maine
GEI PROJECT NUMBER: 2203703

BORING WB-2 PAGE 2 OF 3

Elev. (ft)	Depth (ft)	Sample No.	Depth (ft)	Pen./ Rec. (in)	Blows per 6 in. or RQD	Drilling Remarks/ Field Test Data	Layer Name	Soil and Rock Description
-40	30	S6	24 to 26	24/24	WOH/18"-1	Qp=0.25 tsf Sv=0.05 tsf	CLAY	S6: LEAN CLAY (CL); ~100% low plasticity fines. Gray.
		S7	29 to 31	24/24	WOR-WOH/12"-3	Qp=0.25 tsf Sv=0.05 tsf		S7: LEAN CLAY (CL); ~95% low plasticity fines, ~5% fine sand. Gray. Sand seam in tip.
-50	40	S8	34 to 36	24/24	WOH/12"-WOH/12"	Drove 4" casing to 32'. Drilled open hole 32-44'. Drilled with 3" casing 44' to top of rock. Qp=0.25 tsf Sv=0.05 tsf		S8: LEAN CLAY (CL); Similar to S7.
		S9	39 to 41	24/24	WOH/12"-3-3			S9 (0-6"): SANDY SILT (ML); ~60% nonplastic fines, ~40% fine sand. Gray. S9 (6-13"): LEAN CLAY (CL): Similar to S8. S9 (13-19"): SANDY SILT (ML); Similar to (0-9"). S9 (19-24") LEAN CLAY (CL): Similar to S8.
-60	50	S10	44 to 46	24/16	10-14-8-5		TILL	S10: SILTY SAND (SM); ~75% fine sand, ~25% nonplastic fines. Gray. More silt (0-8") more sand (8-16").
		S11	49 to 51	24/22	6-10-13-33			S11: NARROWLY GRADED SAND with Silt (SP-SM); ~90% fine sand, ~10% nonplastic fines. Gray (0-10"), Gray/brown (10-22"). One piece of gravel at 18".
	55	S12	54 to 56	24/15	10-7-10-18			S12: NARROWLY GRADED SAND with Silt (SP-SM); Similar to S11. Gravel seam (3-5").

NOTES:
PROJECT NAME: UNE Marine Science Center Pier
CITY/STATE: Biddeford, Maine
GEI PROJECT NUMBER: 2203703

BORING WB-2 PAGE 3 OF 3

Elev. (ft)	Depth (ft)	Sample No.	Depth (ft)	Pen./ Rec. (in)	Blows per 6 in. or RQD	Drilling Remarks/ Field Test Data	Layer Name	Soil and Rock Description
-70	60						TILL	
		C1	59 to 63.8	57/57	17	Core Times (min/ft): 2-2-2/2.7'-1/0.3'-4-5/0.6' C1 jammed at 2.7, 4.6'.	ROCK	C1: GNEISS, hard, dark gray with white banding. Highly weathered (0-19"), slightly weathered (19-57"), joints spaced 0 to 5" at 30 to 75 degrees. weathering occurs in quartzy seams.
-80	70	C2	63.8 to 68.4	55/55	13	Core Times (min/ft): 2-2-1/0.6'-2-5 C2 jammed at 2.6, 4.6'.		C2: GNEISS. Similar to C1. Slightly weathered (0-22"), highly weathered (22-31"), slightly weathered (31-55"). Weathering in quartz bands.
	80							Bottom of boring at depth 68.4 ft.

NOTES:
PROJECT NAME: UNE Marine Science Center Pier
CITY/STATE: Biddeford, Maine
GEI PROJECT NUMBER: 2203703

2022 BORING WB-2

ELEVATION	MLLW	NAVD88*
BFE	+19.0	+14.0
HAT	+11.6	+6.6
MHHW	+9.7	+4.7
MHW	+9.3	+4.3
MSL	+4.8	-0.2
MLW	+0.3	-4.7
MLLW	0.0	-5.0

*PROJECT DATUM

Attention:
0 1"
If this scale bar does not measure 1" then drawing is not original scale.

STATE OF MAINE · BRIAN M. MCDEVITT · PE18260 · LICENSED · PROFESSIONAL ENGINEER
6/9/2025

Designed:	DJB
Drawn:	JAM
Checked:	BJB
Approved:	BMM
P.E. No:	13033
GEI Project	2203703

GEI Consultants
GEI CONSULTANTS, INC.
5 MILK STREET
PORTLAND, ME 04101
(207)797-8901

UNIVERSITY OF NEW ENGLAND
11 HILLS BEACH RD.
BIDDEFORD, MAINE

UNIVERSITY OF NEW ENGLAND MARINE SCIENCE CENTER PIER
11 HILLS BEACH ROAD
BIDDEFORD, YORK COUNTY, MAINE

NO	DATE	ISSUE/REVISION	APP
8	6/5/2025	ADDRESS PB COMMENTS	DJB
7	4/16/2025	BIDDEFORD PERMIT APP.	DJB
6	9/17/2024	REVISED PERMIT SET	DJB
5	6/27/2024	REVISED PERMIT SET	DJB
4	9/14/2023	DEP PERMIT SET	DJB
3	6/28/2023	75% DESIGN SUBMISSION	DJB
2	2/15/2023	30% DESIGN SUBMISSION	DJB
1	12/9/2022	15% DESIGN SUB REV	DJB
0	11/11/2022	15% DESIGN SUBMISSION	DJB

SHEET NAME
BORING LOGS (SHEET 2 OF 3)

SHEET NO.
B-003

FOR PERMIT

DJCASTELNUOVO, VINNIE \\geiconsultants.com\data\Data_Storage\Working\UNIVERSITY OF NEW ENGLAND\2203703 UNE Marine Science Center Pier\00_CAD\Design\Sheets\2203703-B-003.dwg - 6/6/2025

2022 BORING WB-3

BORING WB-3 — PAGE 1 of 3

BORING INFORMATION
NORTHING (ft): 228,591 | EASTING (ft): 2,895,359
GROUND SURFACE EL. (ft): -10.2 | DATE START/END: 12/9/2022 - 12/9/2022
VERT./HORIZ. DATUMS: NAVD 88/NAD83 ME West Zone | DRILLING COMPANY: New England Boring
TOTAL DEPTH (ft): 63.4 | DRILLER NAME: B. Enos
LOGGED BY: K. Gleichauf | RIG TYPE: CME 21

DRILLING INFORMATION
HAMMER TYPE: Safety Hammer - rope and cathead | CASING I.D./O.D.: 4 inch/ 4.5 inch | CORE BARREL TYPE: NX
AUGER I.D./O.D.: NA / NA | DRILL ROD O.D.: NM | CORE BARREL I.D./O.D.: 1.8 inch / 3 inch
DRILLING METHOD: Drive and Wash/Open Hole
WATER LEVEL DEPTHS (ft): water boring

ABBREVIATIONS: Pen. = Penetration Length; Rec. = Recovery Length; RQD = Rock Quality Designation = Length of Sound Cores>4 in / Pen.,%; WOR = Weight of Rods; WOH = Weight of Hammer; S = Split Spoon Sample; C = Core Sample; U = Undisturbed Sample; SC = Sonic Core; DP = Direct Push Sample; HSA = Hollow-Stem Auger; Qp = Pocket Penetrometer Strength; Sv = Pocket Torvane Shear Strength; LL = Liquid Limit; PI = Plasticity Index; PID = Photoionization Detector; I.D./O.D.= Inside Diameter/Outside Diameter; NA, NM = Not Applicable, Not Measured; Blows per 6 in.: 140-lb hammer falling 30 inches to drive a 2-inch-O.D. split spoon sampler.

Elev. (ft)	Depth (ft)	Sample No.	Depth (ft)	Pen./Rec. (in)	Blows per 6 in. or RQD	Drilling Remarks/Field Test Data	Layer Name	Soil and Rock Description
		S1	0 to 2	24/5	WOH/18"-1		SAND/SILT	S1: SILTY SAND (SM); ~80% fine to coarse sand, ~20% nonplastic/organic fines. Gray. wood. organic odor.
		S2	3 to 5	24/9	2-1-2-3			S2: WIDELY GRADED SAND (SW); ~100% fine to coarse sand. Gray. organic odor.
	5							
		S3	8 to 10	24/12	1-2-3-4			S3: WIDELY GRADED SAND (SW); Similar to S2. Shells.
-20	10							
		S4	13 to 15	24/7	1-2-3-6			S4: NARROWLY GRADED SAND (SP); ~100% coarse sand. Gray. shells.
	15							
		S5	18 to 20	24/12	9-4-8-8			S5: SILTY SAND (SM); ~65% fine sand, ~25% nonplastic fines, ~10% fine to coarse gravel. wood. shells.
-30	20					clay in wash at 22'.		
		S6	23 to	24/24	WOR-	Qp<0.25 tsf Sv=0.05 tsf	CLAY	S6: LEAN CLAY (CL); ~95% low plasticity fines, ~5% fine sand. Gray. Sand seams (8-9"), (19-20").

NOTES:
PROJECT NAME: UNE Marine Science Center Pier
CITY/STATE: Biddeford, Maine
GEI PROJECT NUMBER: 2203703
GEI Consultants
GEI WOBURN STD 5-NORTH-EAST-LAYER NAME 2203703 UNE PIER TYPED LOGS.GPJ 1/19/23

BORING WB-3 — PAGE 2 of 3

NORTHING (ft): 228,591 | EASTING (ft): 2,895,359
GROUND SURFACE EL. (ft): -10.2 | DATE START/END: 12/9/2022 - 12/9/2022
VERT./HORIZ. DATUMS: NAVD 88/NAD83 ME West Zone | DRILLING COMPANY: New England Boring

Elev. (ft)	Depth (ft)	Sample No.	Depth (ft)	Pen./Rec. (in)	Blows per 6 in. or RQD	Drilling Remarks/Field Test Data	Layer Name	Soil and Rock Description
			25		1/12"-1		CLAY	
	25							
		S7	28 to 30	24/24	WOR/12"-WOH-1	drove 4" casing to 28'. Drilled open hole 28-48. Drilled with 3" casing 48' to top of rock.Qp<0.25 tsf Sv=0.05 tsf		S7: LEAN CLAY (CL); Similar to S6.
-40	30							
		S8	33 to 35	24/24	WOR/12"-WOH-2	Qp<0.25 tsf Sv=0.05 tsf		S8: LEAN CLAY (CL) Similar to S6.
	35							
		S9	38 to 40	24/24	WOR/12"-WOH-2	Qp<0.25 tsf Sv=0.05 tsf		S9: LEAN CLAY (CL); Similar to S6. Fine sand seams (6-8"), (20-24").
-50	40							
		S10	43 to 45	24/24	WOR-1/12"-4			S10 (0-6"): LEAN CLAY (CL); Similar to S6. S10(6-24"): CLAYEY SAND (SC); ~75% fine sand, ~25% low plasticity fines. Gray. Brown (20-24").
	45							
		S11	48 to 50	24/5	45-29-14-15		TILL	S11: CLAYEY SAND with Gravel (SC); ~50% fine sand, ~30% fine to coarse gravel up to 1.25", ~20% low plasticity fines. Gray.
-60	50							
		S12	53 to 53.3	4/4	50/4"	casing refusal at 53.3'.Core Times (min/ft): 4-2/0.2' C1 jammed at 1.2'.		S12: NARROWLY GRADED GRAVEL with Sand (GP); ~75% coarse gravel, ~20% fine to coarse sand, ~5% nonplastic fines. Gray/Brown.
		C1	53.3 to	15/15	33		ROCK	C1: GNEISS, hard, dark gray. Slightly weathered. joints spaced 0-5" at 60 to 90 degrees.
	55	C2		60/57	88			

NOTES:
PROJECT NAME: UNE Marine Science Center Pier
CITY/STATE: Biddeford, Maine
GEI PROJECT NUMBER: 2203703
GEI Consultants
GEI WOBURN STD 5-NORTH-EAST-LAYER NAME 2203703 UNE PIER TYPED LOGS.GPJ 1/19/23

BORING WB-3 — PAGE 3 of 3

NORTHING (ft): 228,591 | EASTING (ft): 2,895,359
GROUND SURFACE EL. (ft): -10.2 | DATE START/END: 12/9/2022 - 12/9/2022
VERT./HORIZ. DATUMS: NAVD 88/NAD83 ME West Zone | DRILLING COMPANY: New England Boring

Elev. (ft)	Depth (ft)	Sample No.	Depth (ft)	Pen./Rec. (in)	Blows per 6 in. or RQD	Drilling Remarks/Field Test Data	Layer Name	Soil and Rock Description
			54.6 54.6 to 59.6			Core Times (min/ft): 2-2-3-3-4	ROCK	C2: GNEISS, hard, dark gray with white banding. fresh throughout. joints spaced 3-12" at 60 degrees. calcite seam horizontal at 48".
-70	60	C3	59.6 to 63.4	45/48	31	Core Times (min/ft):2-3-2/0.2'-3-2/0.6'		C3: GNEISS, hard, dark gray. fresh throughout. joints spaced 1-5" at 60 degrees. Horizontal calcite seam at 15". Highly fractured (23-25").
						C3 jammed at 2.2'.		
								Bottom of boring at depth 63.4 ft.
	65							
-80	70							
	75							
-90	80							
	85							

NOTES:
PROJECT NAME: UNE Marine Science Center Pier
CITY/STATE: Biddeford, Maine
GEI PROJECT NUMBER: 2203703
GEI Consultants
GEI WOBURN STD 5-NORTH-EAST-LAYER NAME 2203703 UNE PIER TYPED LOGS.GPJ 1/19/23

2022 BORING WB-3

2022 BORING WB-4

BORING WB-4 — PAGE 1 of 2

BORING INFORMATION
NORTHING (ft): 228,566 | EASTING (ft): 2,895,422
GROUND SURFACE EL. (ft): -8.3 | DATE START/END: 12/6/2022 - 12/6/2022
VERT./HORIZ. DATUMS: NAVD 88/NAD83 ME West Zone | DRILLING COMPANY: New England Boring
TOTAL DEPTH (ft): 46.7 | DRILLER NAME: B. Enos
LOGGED BY: K. Gleichauf | RIG TYPE: CME 21

DRILLING INFORMATION
HAMMER TYPE: Safety Hammer - rope and cathead | CASING I.D./O.D.: 4 inch/ 4.5 inch | CORE BARREL TYPE: NX
AUGER I.D./O.D.: NA / NA | DRILL ROD O.D.: NM | CORE BARREL I.D./O.D.: 1.8 inch / 3 inch
DRILLING METHOD: Drive and Wash/Open Hole
WATER LEVEL DEPTHS (ft): water boring

ABBREVIATIONS: Pen. = Penetration Length; Rec. = Recovery Length; RQD = Rock Quality Designation = Length of Sound Cores>4 in / Pen.,%; WOR = Weight of Rods; WOH = Weight of Hammer; S = Split Spoon Sample; C = Core Sample; U = Undisturbed Sample; SC = Sonic Core; DP = Direct Push Sample; HSA = Hollow-Stem Auger; Qp = Pocket Penetrometer Strength; Sv = Pocket Torvane Shear Strength; LL = Liquid Limit; PI = Plasticity Index; PID = Photoionization Detector; I.D./O.D.= Inside Diameter/Outside Diameter; NA, NM = Not Applicable, Not Measured; Blows per 6 in.: 140-lb hammer falling 30 inches to drive a 2-inch-O.D. split spoon sampler.

Elev. (ft)	Depth (ft)	Sample No.	Depth (ft)	Pen./Rec. (in)	Blows per 6 in. or RQD	Drilling Remarks/Field Test Data	Layer Name	Soil and Rock Description
		S1	0 to 2	24/4	WOR/12"-WOH/12"		SAND/SILT	S1: SILTY SAND (SM); ~60% fine to coarse sand, ~35% organic fines, ~5% fine gravel. Gray. Shells. Wood. Organic odor.
-10								
	5	S2	5 to 7	24/4	1-1-1/12"			S2: SILTY SAND (SM); Similar to S1.
						Casing increased resistance at 7.5'.		
	10	S3	10 to 12	24/15	9-4-1/12"			S3: SANDY SILT (ML); ~60% nonplastic fines, ~40% fine to coarse sand. Gray. Shells. (0-7") mostly fine sand, (7-15") fine to coarse sand. Organic odor.
-20								
	15	S4	15 to 17	24/0	WOH-1/12"-1			S4: No recovery. Redrove 3" spoon. S4 (redrive): SANDY SILT (ML); Similar to S3. One ~2.5" piece of gravel on top. Wood. Shells.
	20	S5	20 to 22	24/24	1/24"	Qp<0.25 tsf Sv=0.05 tsf	CLAY	S5: LEAN CLAY (CL); ~95% low plasticity fines, ~5% fine sand. Gray.
-30								

NOTES:
PROJECT NAME: UNE Marine Science Center Pier
CITY/STATE: Biddeford, Maine
GEI PROJECT NUMBER: 2203703
GEI Consultants
GEI WOBURN STD 5-NORTH-EAST-LAYER NAME 2203703 UNE PIER TYPED LOGS.GPJ 1/19/23

BORING WB-4 — PAGE 2 of 2

NORTHING (ft): 228,566 | EASTING (ft): 2,895,422
GROUND SURFACE EL. (ft): -8.3 | DATE START/END: 12/6/2022 - 12/6/2022
VERT./HORIZ. DATUMS: NAVD 88/NAD83 ME West Zone | DRILLING COMPANY: New England Boring

Elev. (ft)	Depth (ft)	Sample No.	Depth (ft)	Pen./Rec. (in)	Blows per 6 in. or RQD	Drilling Remarks/Field Test Data	Layer Name	Soil and Rock Description
	25	S6	25 to 27	24/4	1-1-2-4	Qp<0.25 tsf Sv=0.05 tsf	CLAY	S6: LEAN CLAY (CL); Similar to S5.
	30	S7	30 to 32	24/24	5-2-2-1	Qp<0.25 tsf Sv=0.05 tsf		S7: LEAN CLAY (CL); Similar to S5. Some gravel seams.
-40								
	35	S8	35 to 36.7	20/9	WOR/18"-50/2"	Qp<0.25 tsf Sv=0.05 tsf		S8: LEAN CLAY (CL); Similar to S5.
		C1	36.7 to 39.7	36/31	14	Core Times (min/ft): 4-6-6 C1 jammed at 3'.	ROCK	C1: GNEISS, hard, dark gray/green. Slightly weathered. Joints spaced 0-5" at 0-90 degrees.
	40	C2	39.7 to 42.4	32/37	94	Core Times (min/ft): 3-6-4/0.7'		C2: GNEISS. Similar to C1. Joints spaced 1-18".
-50								
		C3	42.4 to 43.2	9/9	0	Core Times (min/ft): 5/0.7'		C3: GNEISS. Similar to C1. Highly fractured.
		C4	43.1 to 44.7	19/19	26	Core Times (min/ft): 5-5/0.6'		C4: GNEISS, hard, dark gray/black with white banding. Slightly weathered. Joints spaced 0-5" at 75 degrees.
	45	C5	44.7 to 46.7	24/24	38	Core Times (min/ft): 5-8		C5: GNEISS. Similar to C4.
								Bottom of boring at depth 46.7 ft.
	50							
-60								
	55							

NOTES:
PROJECT NAME: UNE Marine Science Center Pier
CITY/STATE: Biddeford, Maine
GEI PROJECT NUMBER: 2203703
GEI Consultants
GEI WOBURN STD 5-NORTH-EAST-LAYER NAME 2203703 UNE PIER TYPED LOGS.GPJ 1/19/23

2022 BORING WB-4

2023 BORING LB-1

BORING LB-1 — PAGE 1 of 1

BORING INFORMATION
LOCATION: Proposed Pier Near Shore
GROUND SURFACE EL. (ft): NM | DATE START/END: 3/9/2023 - 3/9/2023
VERTICAL DATUM: | DRILLING COMPANY: New England Boring
TOTAL DEPTH (ft): 8.5 | DRILLER NAME: Mike M.
LOGGED BY: D. Pelletier | RIG TYPE: M1 ATV

DRILLING INFORMATION
HAMMER TYPE: Manual | CASING I.D./O.D.: 4 inch / NA | CORE BARREL TYPE:
AUGER I.D./O.D.: NA / NA | DRILL ROD O.D.: NM | CORE BARREL I.D./O.D. NA / NA
DRILLING METHOD: Drive and Wash
WATER LEVEL DEPTHS (ft): Not measured

ABBREVIATIONS: Pen. = Penetration Length; Rec. = Recovery Length; RQD = Rock Quality Designation = Length of Sound Cores>4 in / Pen.,%; WOR = Weight of Rods; WOH = Weight of Hammer; S = Split Spoon Sample; C = Core Sample; U = Undisturbed Sample; SC = Sonic Core; DP = Direct Push Sample; HSA = Hollow-Stem Auger; Qp = Pocket Penetrometer Strength; Sv = Pocket Torvane Shear Strength; LL = Liquid Limit; PI = Plasticity Index; PID = Photoionization Detector; I.D./O.D. = Inside Diameter/Outside Diameter; NA, NM = Not Applicable, Not Measured; Blows per 6 in.: 140-lb hammer falling 30 inches to drive a 2-inch-O.D. split spoon sampler.

Elev. (ft)	Depth (ft)	Sample No.	Depth (ft)	Pen./Rec. (in)	Blows per 6 in. or RQD	Drilling Remarks/Field Test Data	Layer Name	Soil and Rock Description
		S1	0 to 2	24/4	3-3-5-13			S1: SANDY ORGANIC SOIL (OL), 60% nonplastic fines, 40% fine sand, dark brown, organic topsoil.
		S2	2 to 2.2	2/2	50/0.25	Ledge at 2.2 ft. Switch to Drive and Wash. Rollerbit to 3 ft.		S2: WIDELY GRADED GRAVEL WITH SAND (GP), 85% angular gravel, 10% fine to coarse sand, 5% nonplastic fines, dark gray (WEATHERED BEDROCK).
		C1	3 to 7	48/40	10			C1: GNEISS, hard, metamorphic, fine-grained, joints slightly to moderately weathered, close, some cavaties throughout, gray. RQD 10% MPF 10-11-12-15
	5							
		C2	7 to 8.5	18/16	50			C2: GNEISS, hard, metamorphic, fine-grained, joints slightly to moderately weathered, very close except 0-9 inches one piece, gray. RQD 50% MPF 18-11
								Finished hole at 5.5 ft. coring (8.5 ft. depth) due to time constraints.
	10							
	15							
	20							

NOTES:
PROJECT NAME: UNE Marine Science Center Pier
CITY/STATE: Biddeford, ME
GEI PROJECT NUMBER: 2203703
GEI Consultants
GEI WOBURN STD 1-LOCATION-LAYER NAME UNE BORING LOGS.GPJ 4/3/23

2023 BORING LB-1

2023 BORING LB-3

BORING LB-3 — PAGE 1 of 1

BORING INFORMATION
LOCATION: Near Stairway
GROUND SURFACE EL. (ft): NM | DATE START/END: 3/9/2023 - 3/9/2023
VERTICAL DATUM: | DRILLING COMPANY: New England Boring
TOTAL DEPTH (ft): 1.2 | DRILLER NAME: Mike M.
LOGGED BY: D. Pelletier | RIG TYPE: M1 ATV

DRILLING INFORMATION
HAMMER TYPE: Manual | CASING I.D./O.D.: 4 inch / NA | CORE BARREL TYPE:
AUGER I.D./O.D.: NA / NA | DRILL ROD O.D.: NM | CORE BARREL I.D./O.D. NA / NA
DRILLING METHOD: Drive and Wash
WATER LEVEL DEPTHS (ft): Not measured

ABBREVIATIONS: Pen. = Penetration Length; Rec. = Recovery Length; RQD = Rock Quality Designation = Length of Sound Cores>4 in / Pen.,%; WOR = Weight of Rods; WOH = Weight of Hammer; S = Split Spoon Sample; C = Core Sample; U = Undisturbed Sample; SC = Sonic Core; DP = Direct Push Sample; HSA = Hollow-Stem Auger; Qp = Pocket Penetrometer Strength; Sv = Pocket Torvane Shear Strength; LL = Liquid Limit; PI = Plasticity Index; PID = Photoionization Detector; I.D./O.D. = Inside Diameter/Outside Diameter; NA, NM = Not Applicable, Not Measured; Blows per 6 in.: 140-lb hammer falling 30 inches to drive a 2-inch-O.D. split spoon sampler.

Elev. (ft)	Depth (ft)	Sample No.	Depth (ft)	Pen./Rec. (in)	Blows per 6 in. or RQD	Drilling Remarks/Field Test Data	Layer Name	Soil and Rock Description
		S1	0 to 1.2	14/6	2-8-50/2"			S1: SANDY ORGANIC SOIL (OL), 60% nonplastic fines, 40% fine sand, dark brown, organic topsoil.
								Bottom of boring at depth 1.2 ft.
	5							
	10							
	15							
	20							

NOTES:
PROJECT NAME: UNE Marine Science Center Pier
CITY/STATE: Biddeford, ME
GEI PROJECT NUMBER: 2203703
GEI Consultants
GEI WOBURN STD 1-LOCATION-LAYER NAME UNE BORING LOGS.GPJ 4/3/23

2023 BORING LB-3

FOR PERMIT

ELEVATION	MLLW	NAVD88*
BFE	+19.0	+14.0
HAT	+11.6	+6.6
MHHW	+9.7	+4.7
MHW	+9.3	+4.3
MSL	+4.8	-0.2
MLW	+0.3	-4.7
MLLW	0.0	-5.0

*PROJECT DATUM

Attention: 0 1" If this scale bar does not measure 1" then drawing is not original scale.

STATE OF MAINE — BRIAN M. MCDEVITT — PE18260 — LICENSED PROFESSIONAL ENGINEER
6/9/2025

Designed:	DJB
Drawn:	JAM
Checked:	BJB
Approved:	BMM
P.E. No:	13033
GEI Project	2203703

GEI Consultants
GEI CONSULTANTS, INC.
5 MILK STREET
PORTLAND, ME 04101
(207)797-8901

UNE
UNIVERSITY OF NEW ENGLAND
11 HILLS BEACH RD.
BIDDEFORD, MAINE

UNIVERSITY OF NEW ENGLAND MARINE SCIENCE CENTER PIER
11 HILLS BEACH ROAD
BIDDEFORD, YORK COUNTY, MAINE

NO	DATE	ISSUE/REVISION	APP
8	6/5/2025	ADDRESS PB COMMENTS	DJB
7	4/16/2025	BIDDEFORD PERMIT APP.	DJB
6	9/17/2024	REVISED PERMIT SET	DJB
5	6/27/2024	REVISED PERMIT SET	DJB
4	9/14/2023	DEP PERMIT SET	DJB
3	6/28/2023	75% DESIGN SUBMISSION	DJB
2	2/15/2023	30% DESIGN SUBMISSION	DJB
1	12/9/2022	15% DESIGN SUB REV	DJB
0	11/11/2022	15% DESIGN SUBMISSION	DJB

SHEET NAME: **BORING LOGS (SHEET 3 OF 3)**

SHEET NO.: **B-004**

DICASTELNUOVO, VINNIE \\geiconsultants.com\data\Data_Storage\Working\UNIVERSITY OF NEW ENGLAND\2203703 UNE Marine Science Center Pier\00_CAD\Design\Sheets\2203703-B-004.dwg - 6/6/2025

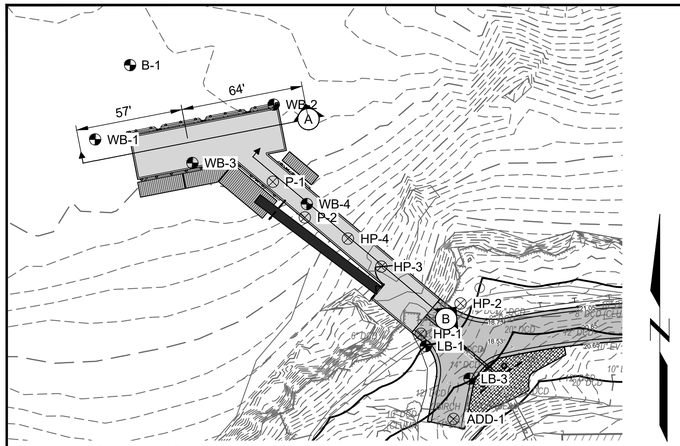

KEY PLAN
SCALE: 1" = 40'

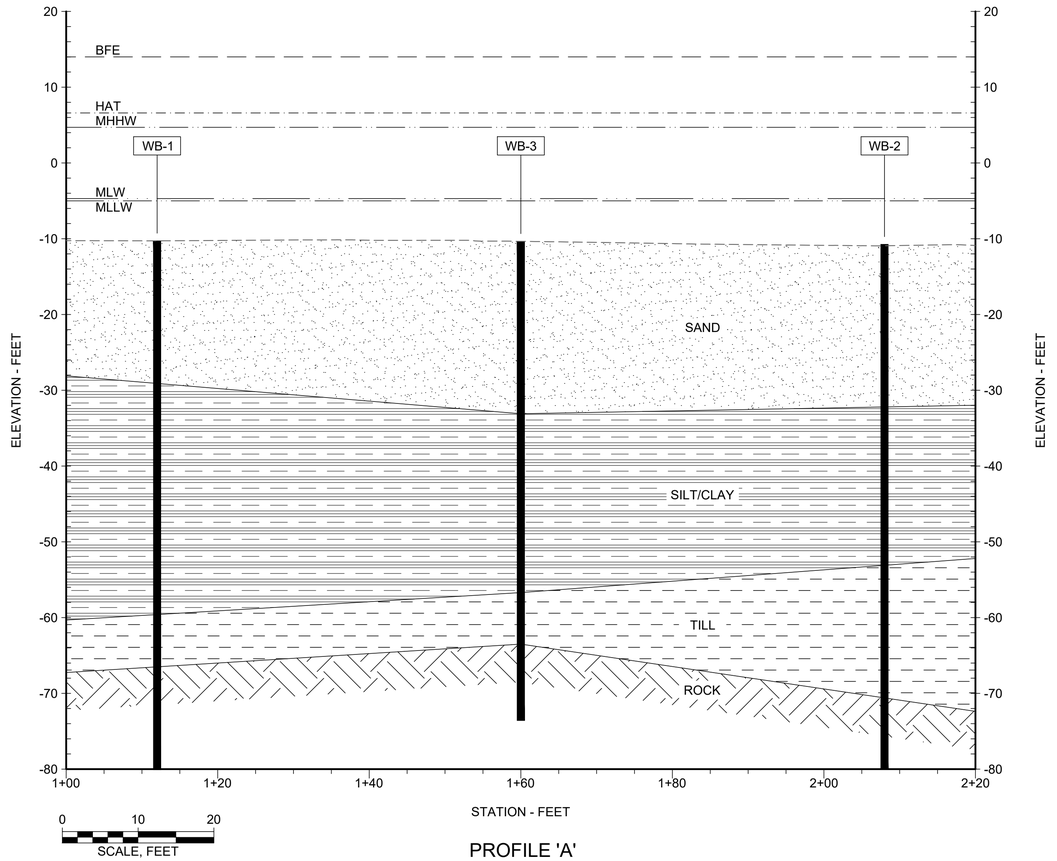

PROFILE 'A'
SCALE: 1" = 10'

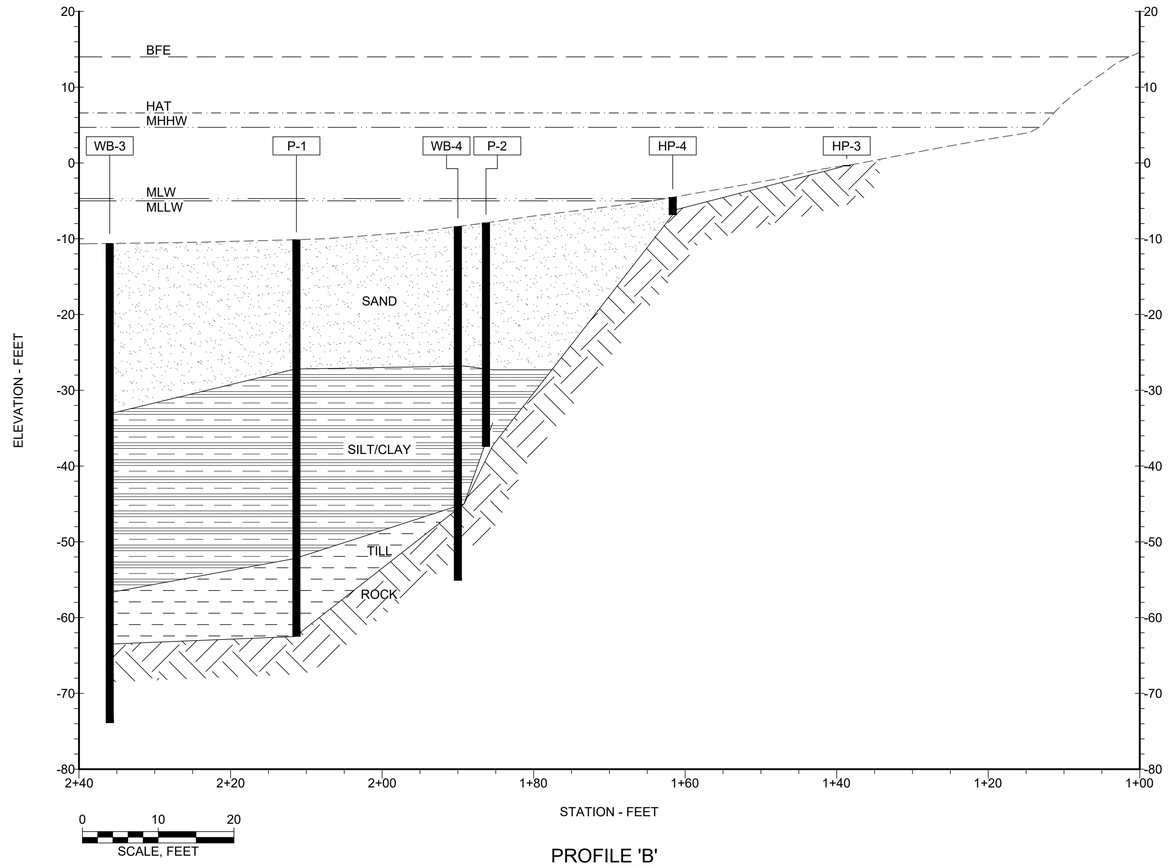

PROFILE 'B'
SCALE: 1" = 10'

FOR PERMIT

ELEVATION	MLLW	NAVD88*
BFE	+19.0	+14.0
HAT	+11.6	+6.6
MHHW	+9.7	+4.7
MHW	+9.3	+4.3
MSL	+4.8	-0.2
MLW	+0.3	-4.7
MLLW	0.0	-5.0

*PROJECT DATUM

Attention:
0 1"
If this scale bar does not measure 1" then drawing is not original scale.

STATE OF MAINE
BRIAN M. MCDEVITT
PE18260
LICENSED
PROFESSIONAL ENGINEER
6/9/2025

Designed:	DJB
Drawn:	JAM
Checked:	BJB
Approved:	BMM
P.E. No:	13033
GEI Project	2203703

GEI Consultants
GEI CONSULTANTS, INC.
5 MILK STREET
PORTLAND, ME 04101
(207)797-8901

UNE
UNIVERSITY OF NEW ENGLAND
11 HILLS BEACH RD.
BIDDEFORD, MAINE

UNIVERSITY OF NEW ENGLAND MARINE SCIENCE CENTER PIER

11 HILLS BEACH ROAD
BIDDEFORD, YORK COUNTY, MAINE

NO	DATE	ISSUE/REVISION	APP
8	6/5/2025	ADDRESS PB COMMENTS	DJB
7	4/16/2025	BIDDEFORD PERMIT APP.	DJB
6	9/17/2024	REVISED PERMIT SET	DJB
5	6/27/2024	REVISED PERMIT SET	DJB
4	9/14/2023	DEP PERMIT SET	DJB
3	6/28/2023	75% DESIGN SUBMISSION	DJB
2	2/15/2023	30% DESIGN SUBMISSION	DJB
1	12/9/2022	15% DESIGN SUB REV	DJB
0	11/11/2022	15% DESIGN SUBMISSION	DJB

SHEET NAME
INTERPRETIVE SUBSURFACE PROFILE

SHEET NO.
B-005

DICASTELNUOVO, VINNIE \\geiconsultants.com\data\Data_Storage\Working\UNIVERSITY OF NEW ENGLAND\2203703 UNE Marine Science Center Pier\00_CAD\Design\Sheets\2203703-B-005.dwg - 6/6/2025

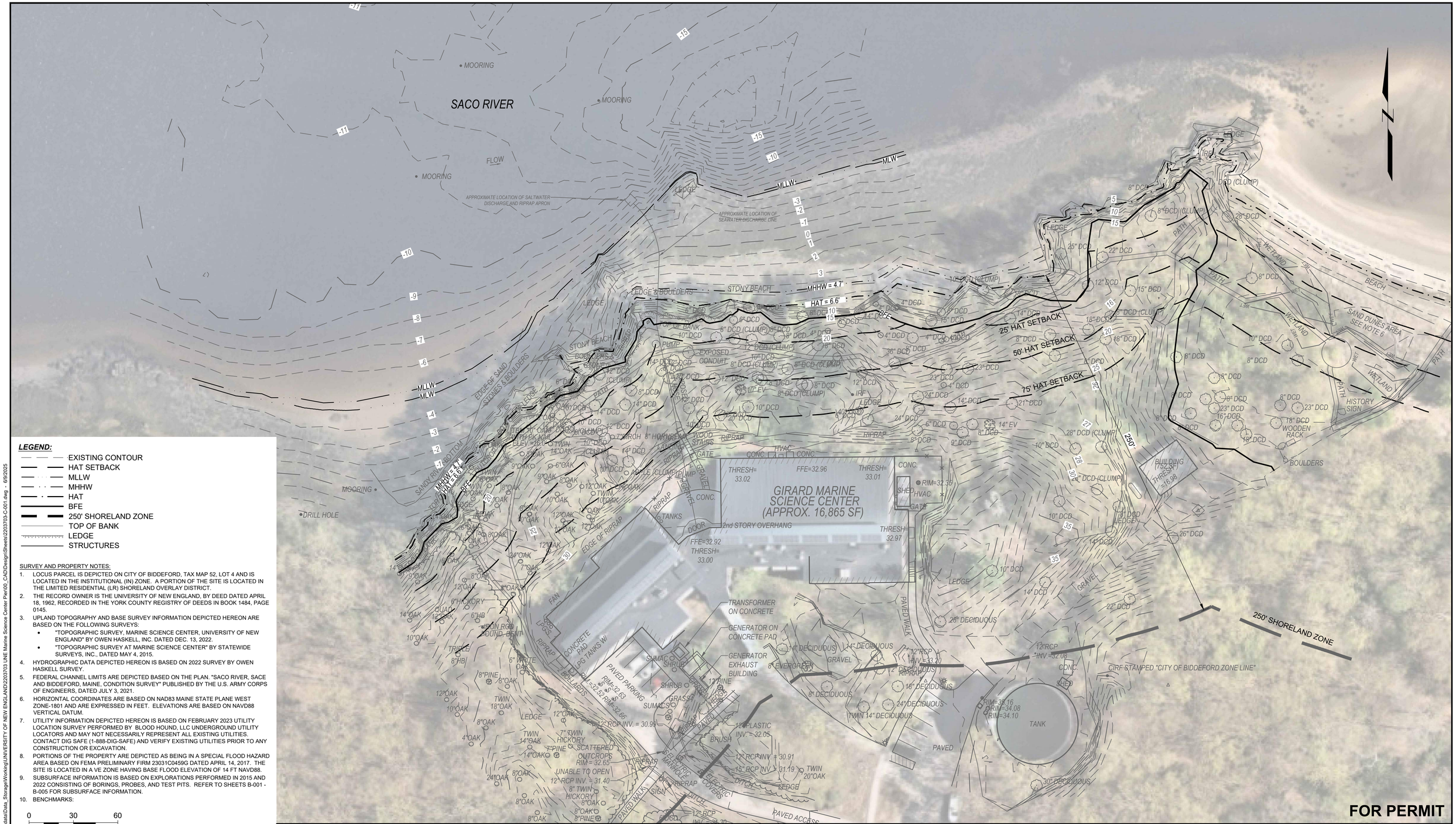

LEGEND:

- EXISTING CONTOUR
- HAT SETBACK
- MLLW
- MHHW
- HAT
- BFE
- 250' SHORELAND ZONE
- TOP OF BANK
- LEDGE
- STRUCTURES

SURVEY AND PROPERTY NOTES:

1. LOCUS PARCEL IS DEPICTED ON CITY OF BIDDEFORD, TAX MAP 52, LOT 4 AND IS LOCATED IN THE INSTITUTIONAL (IN) ZONE. A PORTION OF THE SITE IS LOCATED IN THE LIMITED RESIDENTIAL (LR) SHORELAND OVERLAY DISTRICT.
2. THE RECORD OWNER IS THE UNIVERSITY OF NEW ENGLAND, BY DEED DATED APRIL 18, 1962, RECORDED IN THE YORK COUNTY REGISTRY OF DEEDS IN BOOK 1484, PAGE 0145.
3. UPLAND TOPOGRAPHY AND BASE SURVEY INFORMATION DEPICTED HEREON ARE BASED ON THE FOLLOWING SURVEYS:
   - "TOPOGRAPHIC SURVEY, MARINE SCIENCE CENTER, UNIVERSITY OF NEW ENGLAND" BY OWEN HASKELL, INC. DATED DEC. 13, 2022.
   - "TOPOGRAPHIC SURVEY AT MARINE SCIENCE CENTER" BY STATEWIDE SURVEYS, INC., DATED MAY 4, 2015.
4. HYDROGRAPHIC DATA DEPICTED HEREON IS BASED ON 2022 SURVEY BY OWEN HASKELL SURVEY.
5. FEDERAL CHANNEL LIMITS ARE DEPICTED BASED ON THE PLAN. "SACO RIVER, SACE AND BIDDEFORD, MAINE, CONDITION SURVEY" PUBLISHED BY THE U.S. ARMY CORPS OF ENGINEERS, DATED JULY 3, 2021.
6. HORIZONTAL COORDINATES ARE BASED ON NAD83 MAINE STATE PLANE WEST ZONE-1801 AND ARE EXPRESSED IN FEET. ELEVATIONS ARE BASED ON NAVD88 VERTICAL DATUM.
7. UTILITY INFORMATION DEPICTED HEREON IS BASED ON FEBRUARY 2023 UTILITY LOCATION SURVEY PERFORMED BY BLOOD HOUND, LLC UNDERGROUND UTILITY LOCATORS AND MAY NOT NECESSARILY REPRESENT ALL EXISTING UTILITIES. CONTACT DIG SAFE (1-888-DIG-SAFE) AND VERIFY EXISTING UTILITIES PRIOR TO ANY CONSTRUCTION OR EXCAVATION.
8. PORTIONS OF THE PROPERTY ARE DEPICTED AS BEING IN A SPECIAL FLOOD HAZARD AREA BASED ON FEMA PRELIMINARY FIRM 23031C0459G DATED APRIL 14, 2017. THE SITE IS LOCATED IN A VE ZONE HAVING BASE FLOOD ELEVATION OF 14 FT NAVD88.
9. SUBSURFACE INFORMATION IS BASED ON EXPLORATIONS PERFORMED IN 2015 AND 2022 CONSISTING OF BORINGS, PROBES, AND TEST PITS. REFER TO SHEETS B-001 - B-005 FOR SUBSURFACE INFORMATION.
10. BENCHMARKS:

0 30 60
SCALE, FEET

ELEVATION	MLLW	NAVD88*
BFE	+19.0	+14.0
HAT	+11.6	+6.6
MHHW	+9.7	+4.7
MHW	+9.3	+4.3
MSL	+4.8	-0.2
MLW	+0.3	-4.7
MLLW	0.0	-5.0

*PROJECT DATUM

Attention:
0 1"
If this scale bar does not measure 1" then drawing is not original scale.

STATE OF MAINE
BRIAN M. MCDEVITT
PE18260
LICENSED
PROFESSIONAL ENGINEER
6/9/2025

Designed:	DJB
Drawn:	JAM
Checked:	BJB
Approved:	BMM
P.E. No:	13033
GEI Project	2203703

GEI Consultants
GEI CONSULTANTS, INC.
5 MILK STREET
PORTLAND, ME 04101
(207)797-8901

UNIVERSITY OF NEW ENGLAND
11 HILLS BEACH RD.
BIDDEFORD, MAINE

UNIVERSITY OF NEW ENGLAND MARINE SCIENCE CENTER PIER

11 HILLS BEACH ROAD
BIDDEFORD, YORK COUNTY, MAINE

NO	DATE	ISSUE/REVISION	APP
8	6/5/2025	ADDRESS PB COMMENTS	DJB
7	4/16/2025	BIDDEFORD PERMIT APP.	DJB
6	9/17/2024	REVISED PERMIT SET	DJB
5	6/27/2024	REVISED PERMIT SET	DJB
4	9/14/2023	DEP PERMIT SET	DJB
3	6/28/2023	75% DESIGN SUBMISSION	DJB
2	2/15/2023	30% DESIGN SUBMISSION	DJB
1	12/9/2022	15% DESIGN SUB REV	DJB
0	11/11/2022	15% DESIGN SUBMISSION	DJB

SHEET NAME
EXISTING CONDITIONS PLAN

SHEET NO.
C-001

FOR PERMIT

DJCASTELNUOVO, VINNIE \\geiconsultants.com\data\Data_Storage\Working\UNIVERSITY OF NEW ENGLAND\2203703 UNE Marine Science Center Pier\00_CAD\Design\Sheets\2203703-C-001.dwg - 6/9/2025

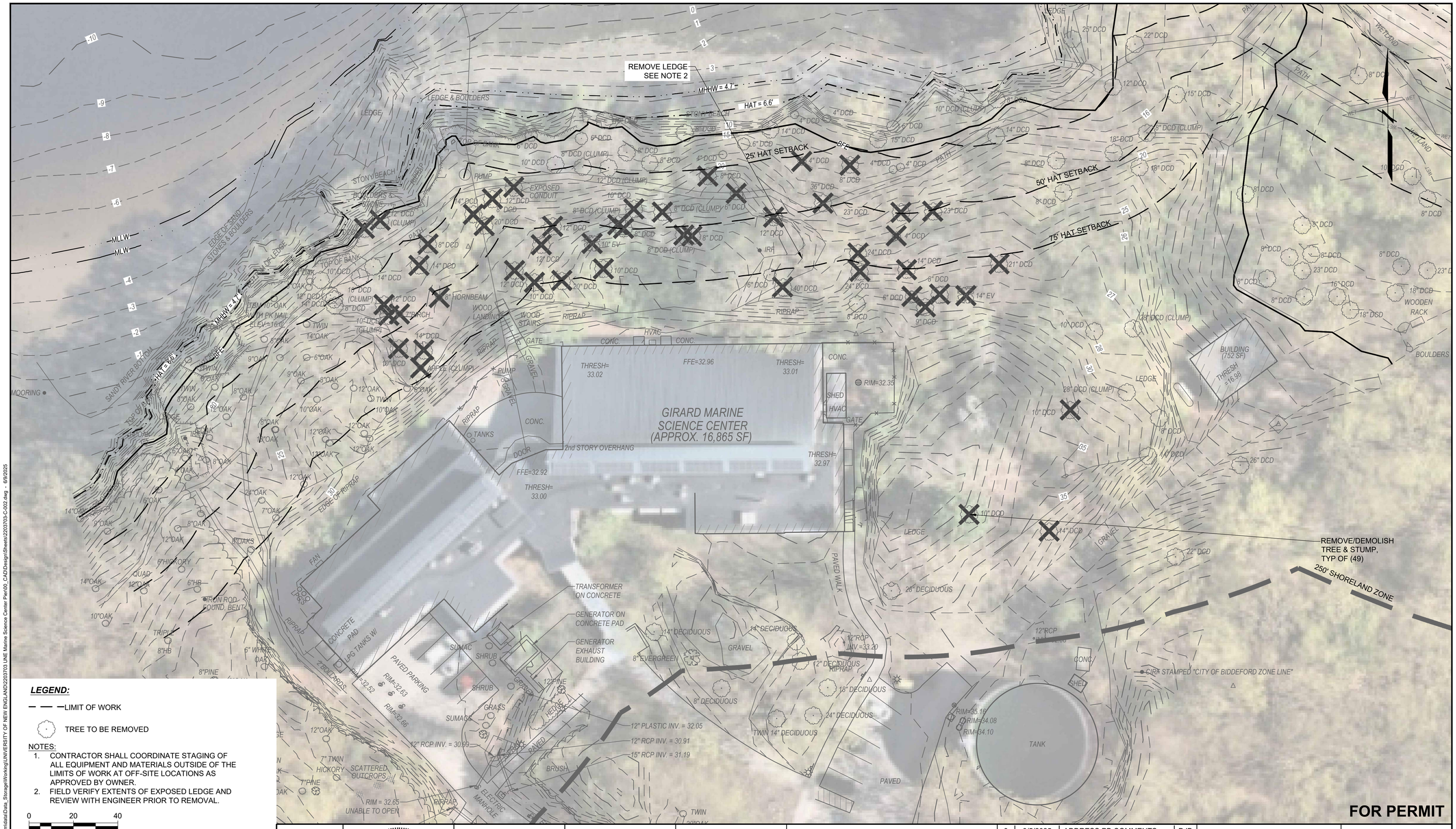

LEGEND:

— — —LIMIT OF WORK

TREE TO BE REMOVED

NOTES:

1. CONTRACTOR SHALL COORDINATE STAGING OF ALL EQUIPMENT AND MATERIALS OUTSIDE OF THE LIMITS OF WORK AT OFF-SITE LOCATIONS AS APPROVED BY OWNER.
2. FIELD VERIFY EXTENTS OF EXPOSED LEDGE AND REVIEW WITH ENGINEER PRIOR TO REMOVAL.

0 20 40
SCALE, FEET

ELEVATION	MLLW	NAVD88*
BFE	+19.0	+14.0
HAT	+11.6	+6.6
MHHW	+9.7	+4.7
MHW	+9.3	+4.3
MSL	+4.8	-0.2
MLW	+0.3	-4.7
MLLW	0.0	-5.0

*PROJECT DATUM

FOR PERMIT

Attention:
0 1"
If this scale bar does not measure 1" then drawing is not original scale.

STATE OF MAINE
BRIAN M. MCDEVITT
PE18260
LICENSED
PROFESSIONAL ENGINEER
6/9/2025

Designed:	DJB
Drawn:	JAM
Checked:	BJB
Approved:	BMM
P.E. No:	13033
GEI Project	2203703

GEI Consultants
GEI CONSULTANTS, INC.
5 MILK STREET
PORTLAND, ME 04101
(207)797-8901

UNE
UNIVERSITY OF NEW ENGLAND
11 HILLS BEACH RD.
BIDDEFORD, MAINE

UNIVERSITY OF NEW ENGLAND
MARINE SCIENCE CENTER PIER
11 HILLS BEACH ROAD
BIDDEFORD, YORK COUNTY, MAINE

NO	DATE	ISSUE/REVISION	
8	6/5/2025	ADDRESS PB COMMENTS	DJB
7	4/16/2025	BIDDEFORD PERMIT APP.	DJB
6	9/17/2024	REVISED PERMIT SET	DJB
5	6/27/2024	REVISED PERMIT SET	DJB
4	9/14/2023	DEP PERMIT SET	DJB
3	6/28/2023	75% DESIGN SUBMISSION	DJB
2	2/15/2023	30% DESIGN SUBMISSION	DJB
1	12/9/2022	15% DESIGN SUB REV	DJB
0	11/11/2022	15% DESIGN SUBMISSION	DJB

SHEET NAME
DEMOLITION AND CONSTRUCTION STAGING

SHEET NO.
C-002

DJCASTELNUOVO, VINNIE \\geiconsultants.com\data\Data_Storage\Working\UNIVERSITY OF NEW ENGLAND\2203703 UNE Marine Science Center Pier\00_CAD\Design\Sheets\2203703-C-002.dwg - 6/9/2025

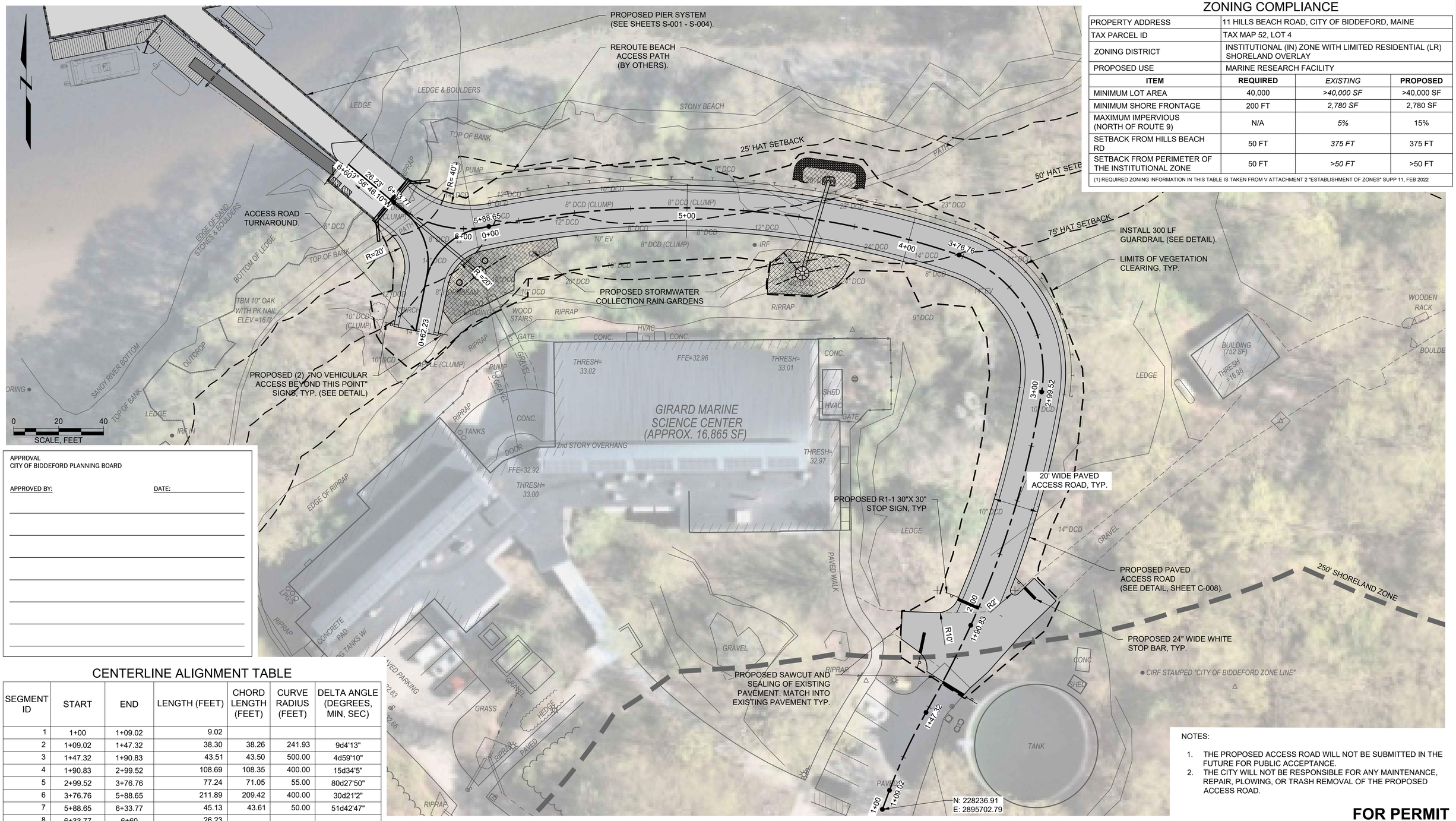

ZONING COMPLIANCE

PROPERTY ADDRESS	11 HILLS BEACH ROAD, CITY OF BIDDEFORD, MAINE		
TAX PARCEL ID	TAX MAP 52, LOT 4		
ZONING DISTRICT	INSTITUTIONAL (IN) ZONE WITH LIMITED RESIDENTIAL (LR) SHORELAND OVERLAY		
PROPOSED USE	MARINE RESEARCH FACILITY		
ITEM	**REQUIRED**	*EXISTING*	**PROPOSED**
MINIMUM LOT AREA	40,000	*>40,000 SF*	>40,000 SF
MINIMUM SHORE FRONTAGE	200 FT	*2,780 SF*	2,780 SF
MAXIMUM IMPERVIOUS (NORTH OF ROUTE 9)	N/A	*5%*	15%
SETBACK FROM HILLS BEACH RD	50 FT	*375 FT*	375 FT
SETBACK FROM PERIMETER OF THE INSTITUTIONAL ZONE	50 FT	*>50 FT*	>50 FT

(1) REQUIRED ZONING INFORMATION IN THIS TABLE IS TAKEN FROM V ATTACHMENT 2 "ESTABLISHMENT OF ZONES" SUPP 11, FEB 2022

APPROVAL
CITY OF BIDDEFORD PLANNING BOARD

APPROVED BY: DATE:

CENTERLINE ALIGNMENT TABLE

SEGMENT ID	START	END	LENGTH (FEET)	CHORD LENGTH (FEET)	CURVE RADIUS (FEET)	DELTA ANGLE (DEGREES, MIN, SEC)
1	1+00	1+09.02	9.02			
2	1+09.02	1+47.32	38.30	38.26	241.93	9d4'13"
3	1+47.32	1+90.83	43.51	43.50	500.00	4d59'10"
4	1+90.83	2+99.52	108.69	108.35	400.00	15d34'5"
5	2+99.52	3+76.76	77.24	71.05	55.00	80d27'50"
6	3+76.76	5+88.65	211.89	209.42	400.00	30d21'2"
7	5+88.65	6+33.77	45.13	43.61	50.00	51d42'47"
8	6+33.77	6+60	26.23			

ELEVATION	MLLW	NAVD88*
BFE	+19.0	+14.0
HAT	+11.6	+6.6
MHHW	+9.7	+4.7
MHW	+9.3	+4.3
MSL	+4.8	-0.2
MLW	+0.3	-4.7
MLLW	0.0	-5.0

*PROJECT DATUM

NOTES:

1. THE PROPOSED ACCESS ROAD WILL NOT BE SUBMITTED IN THE FUTURE FOR PUBLIC ACCEPTANCE.
2. THE CITY WILL NOT BE RESPONSIBLE FOR ANY MAINTENANCE, REPAIR, PLOWING, OR TRASH REMOVAL OF THE PROPOSED ACCESS ROAD.

FOR PERMIT

Attention:
0 1"
If this scale bar does not measure 1" then drawing is not original scale.

STATE OF MAINE
BRIAN M. MCDEVITT
PE18260
LICENSED
PROFESSIONAL ENGINEER
6/9/2025

Designed:	DJB
Drawn:	JAM
Checked:	BJB
Approved:	BMM
P.E. No:	13033
GEI Project	2203703

GEI Consultants
GEI CONSULTANTS, INC.
5 MILK STREET
PORTLAND, ME 04101
(207)797-8901

UNE
UNIVERSITY OF NEW ENGLAND
11 HILLS BEACH RD.
BIDDEFORD, MAINE

UNIVERSITY OF NEW ENGLAND MARINE SCIENCE CENTER PIER

11 HILLS BEACH ROAD
BIDDEFORD, YORK COUNTY, MAINE

NO	DATE	ISSUE/REVISION	APP
8	6/5/2025	ADDRESS PB COMMENTS	DJB
7	4/16/2025	BIDDEFORD PERMIT APP.	DJB
6	9/17/2024	REVISED PERMIT SET	DJB
5	6/27/2024	REVISED PERMIT SET	DJB
4	9/14/2023	DEP PERMIT SET	DJB
3	6/28/2023	75% DESIGN SUBMISSION	DJB
2	2/15/2023	30% DESIGN SUBMISSION	DJB
1	12/9/2022	15% DESIGN SUB REV	DJB
0	11/11/2022	15% DESIGN SUBMISSION	DJB

SHEET NAME: **SITE PLAN**

SHEET NO.: **C-003**

DICASTELNUOVO, VINNIE B:\Working\UNIVERSITY OF NEW ENGLAND\2203703 UNE Marine Science Center Pier\00_CAD\Design\Sheets\2203703-C-003.dwg - 6/10/2025

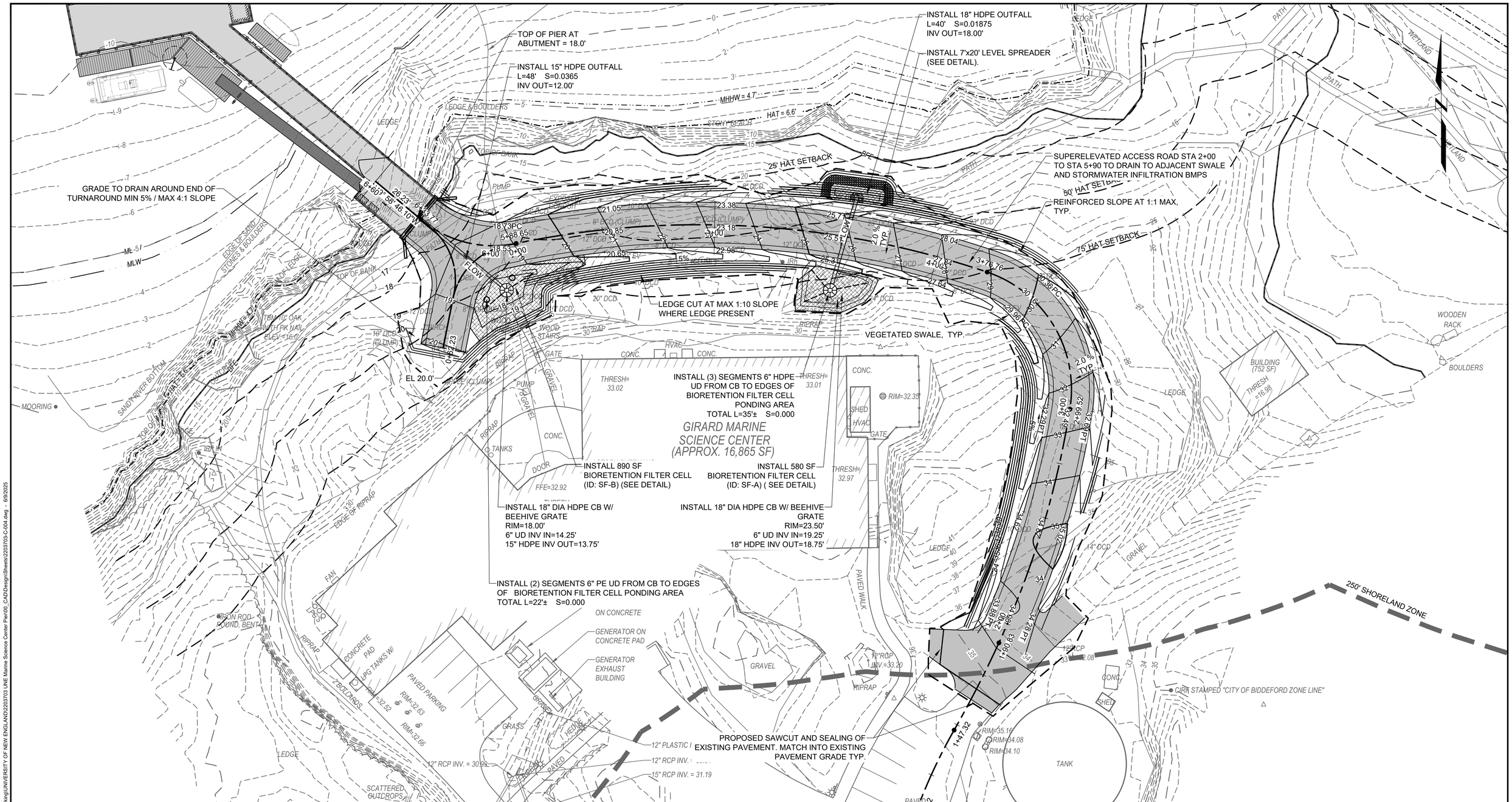

PLAN
SCALE: 1" = 20'

FOR PERMIT

Attention:
0 1"
If this scale bar does not measure 1" then drawing is not original scale.

STATE OF MAINE
BRIAN M. MCDEVITT
PE18260
LICENSED
PROFESSIONAL ENGINEER
6/9/2025

Designed:	DJB
Drawn:	JAM
Checked:	BJB
Approved:	BMM
P.E. No:	13033
GEI Project	2203703

GEI Consultants
GEI CONSULTANTS, INC.
5 MILK STREET
PORTLAND, ME 04101
(207)797-8901

UNIVERSITY OF NEW ENGLAND
11 HILLS BEACH RD.
BIDDEFORD, MAINE

UNIVERSITY OF NEW ENGLAND MARINE SCIENCE CENTER PIER
11 HILLS BEACH ROAD
BIDDEFORD, YORK COUNTY, MAINE

NO	DATE	ISSUE/REVISION	APP
8	6/5/2025	ADDRESS PB COMMENTS	DJB
7	4/16/2025	BIDDEFORD PERMIT APP.	DJB
6	9/17/2024	REVISED PERMIT SET	DJB
5	6/27/2024	REVISED PERMIT SET	DJB
4	9/14/2023	DEP PERMIT SET	DJB
3	6/28/2023	75% DESIGN SUBMISSION	DJB
2	2/15/2023	30% DESIGN SUBMISSION	DJB
1	12/9/2022	15% DESIGN SUB REV	DJB
0	11/11/2022	15% DESIGN SUBMISSION	DJB

SHEET NAME: **GRADING AND DRAINAGE PLAN**

SHEET NO.: **C-004**

DJCASTELNUOVO, VINNIE \\geiconsultants.com\data\Data_Storage\Working\UNIVERSITY OF NEW ENGLAND\2203703 UNE Marine Science Center Pier\00_CAD\Design\Sheets\2203703-C-004.dwg - 6/9/2025

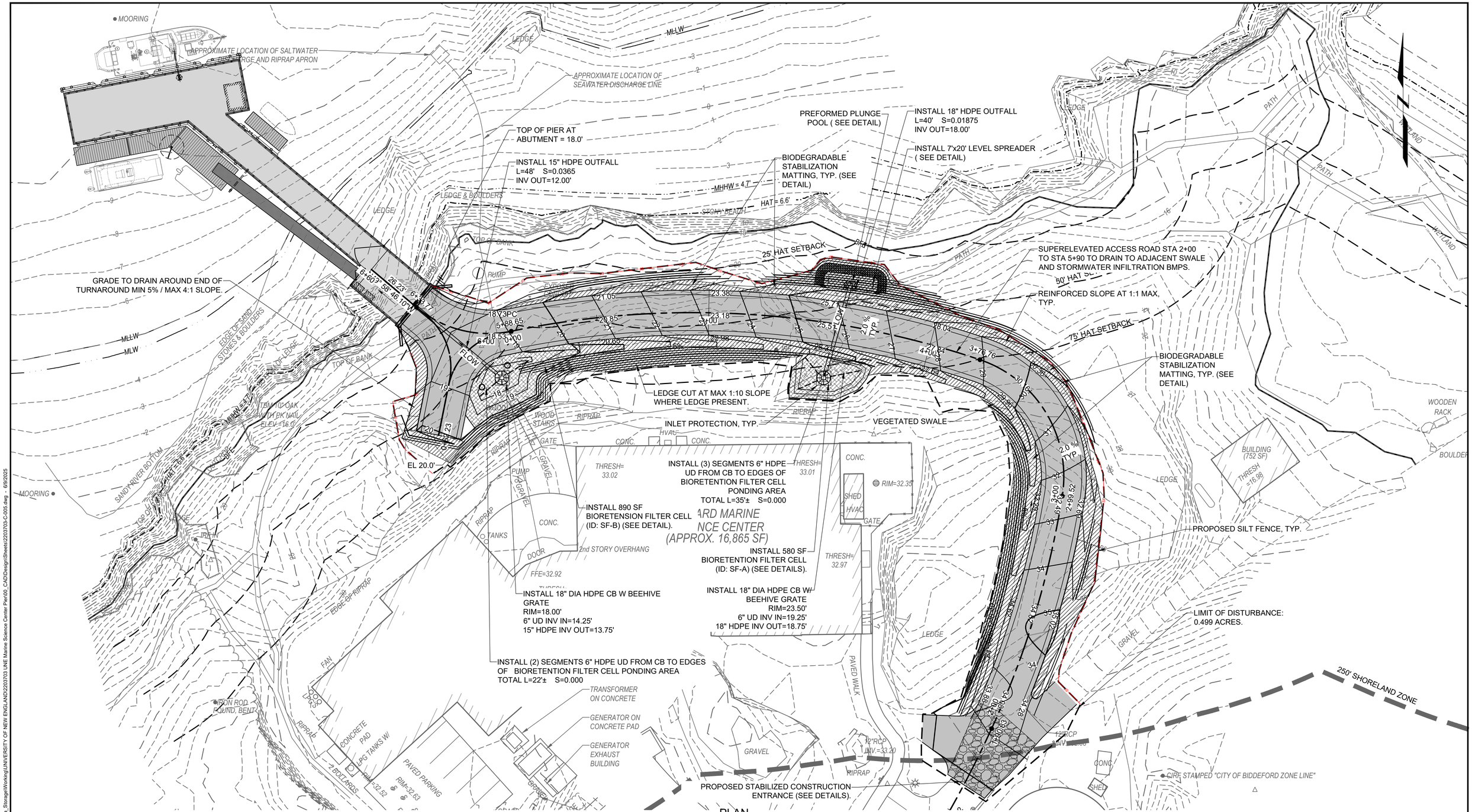

PLAN
SCALE: 1" = 20'

FOR PERMIT

0 NOTE:
1. CONTRACTOR SHALL INSTALL BIODEGRADABLE STABILIZATION MATTING WHEREVER PROPOSED SLOPES EXCEED 5H:1V.

Attention:
0 1"
If this scale bar does not measure 1" then drawing is not original scale.

STATE OF MAINE
BRIAN M. MCDEVITT
PE18260
LICENSED PROFESSIONAL ENGINEER
6/9/2025

Designed:	DJB
Drawn:	JAM
Checked:	BJB
Approved:	BMM
P.E. No:	13033
GEI Project	2203703

GEI Consultants
GEI CONSULTANTS, INC.
5 MILK STREET
PORTLAND, ME 04101
(207)797-8901

UNIVERSITY OF NEW ENGLAND
11 HILLS BEACH RD.
BIDDEFORD, MAINE

UNIVERSITY OF NEW ENGLAND MARINE SCIENCE CENTER PIER
11 HILLS BEACH ROAD
BIDDEFORD, YORK COUNTY, MAINE

NO	DATE	ISSUE/REVISION	APP
8	6/5/2025	ADDRESS PB COMMENTS	DJB
7	4/16/2025	BIDDEFORD PERMIT APP.	DJB
6	9/17/2024	REVISED PERMIT SET	DJB
5	6/27/2024	REVISED PERMIT SET	DJB
4	9/14/2023	DEP PERMIT SET	DJB
3	6/28/2023	75% DESIGN SUBMISSION	DJB
2	2/15/2023	30% DESIGN SUBMISSION	DJB
1	12/9/2022	15% DESIGN SUB REV	DJB
0	11/11/2022	15% DESIGN SUBMISSION	DJB

SHEET NAME: **EROSION CONTROL PLAN**

SHEET NO.: **C-005**

DJCASTELNUOVO, VINNIE \\geiconsultants.com\data\Data_Storage\Working\UNIVERSITY OF NEW ENGLAND\2203703 UNE Marine Science Center Pier\00_CAD\Design\Sheets\2203703-C-005.dwg - 6/9/2025

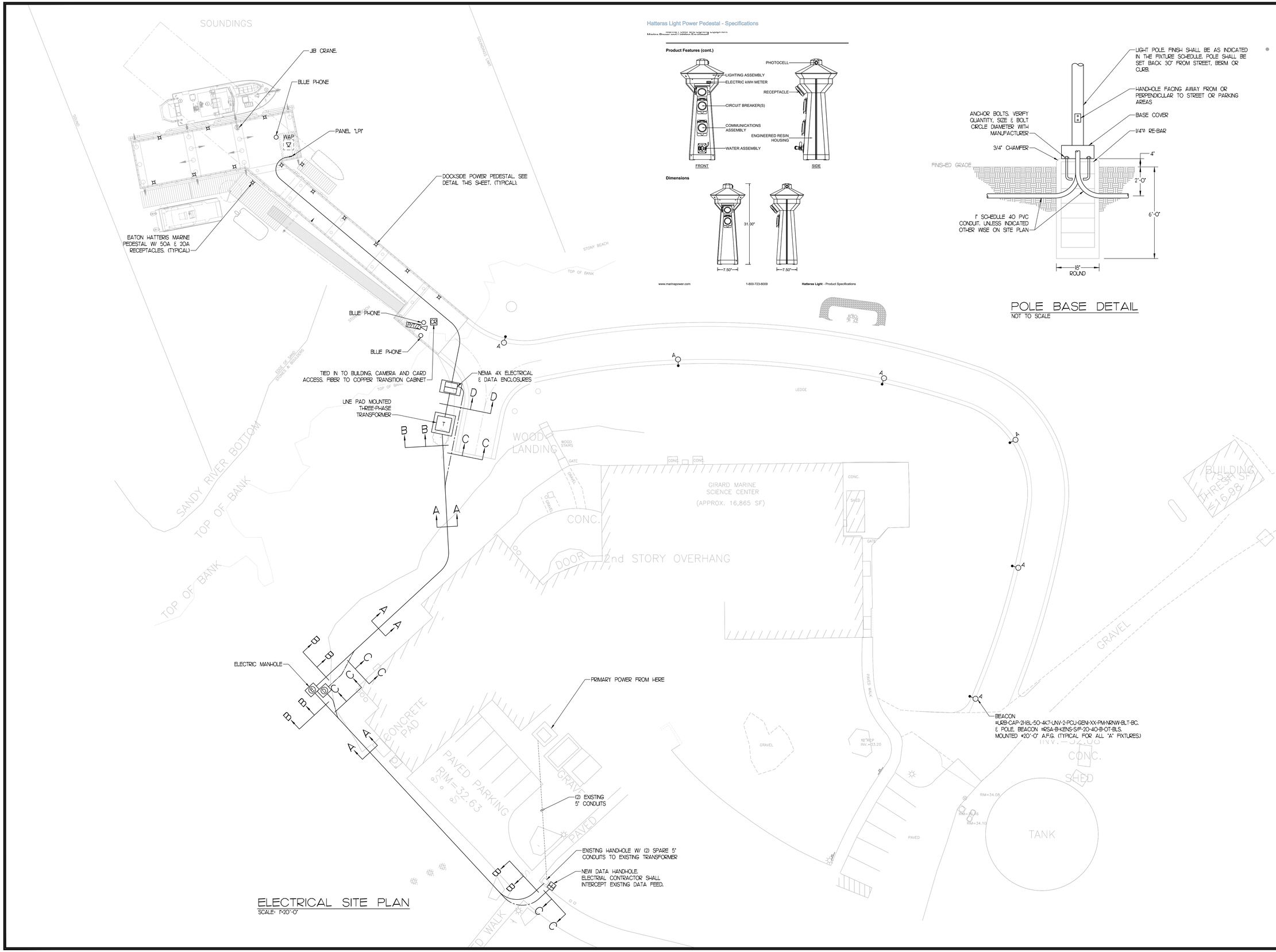

ELECTRICAL SITE PLAN
SCALE: 1"=20'-0"

Hatteras Light Power Pedestal - Specifications

Product Features (cont.)

Dimensions

www.marinapower.com 1-800-723-8009 Hatteras Light - Product Specifications

POLE BASE DETAIL
NOT TO SCALE

VINCENT A. DiIORIO, INC.
CONSULTING ENGINEERS
89 Access Rd. Suite 18
Norwood, MA 02062
(781)255-9754 | vadjr@vadeng.com
www.vadeng.com

REVISIONS:

REV.:	DATE:	DESCRIPTION:

CLIENT:
UNIVERSITY OF NEW ENGLAND

PROJECT:
MARINE SCIENCE CENTER PIER
11 HILLS BEACH ROAD
BIDDEFORD, MAINE

DRAWING TITLE
ELECTRICAL SITE PLAN

DRAWN:	CWQ
CHECKED:	VAD Jr
SCALE:	AS INDICATED
DATE:	APRIL 15, 2025

ES1.1

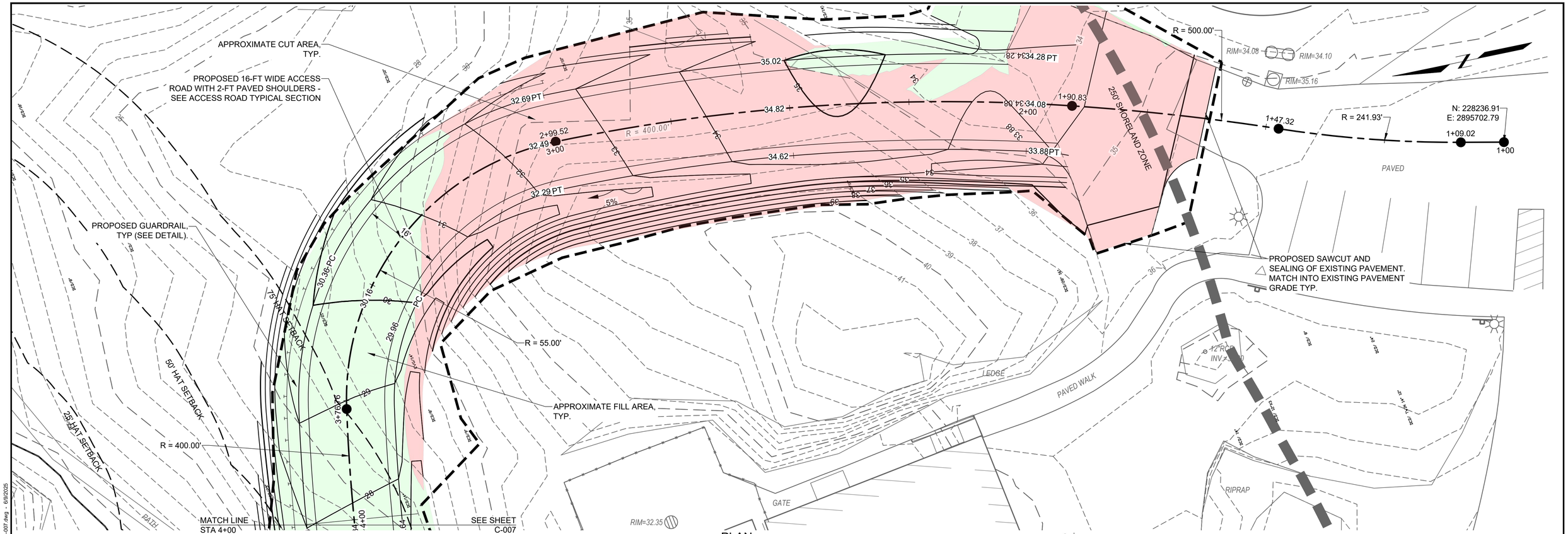

PLAN

SCALE: 1" = 10'

0 10 20

SCALE, FEET

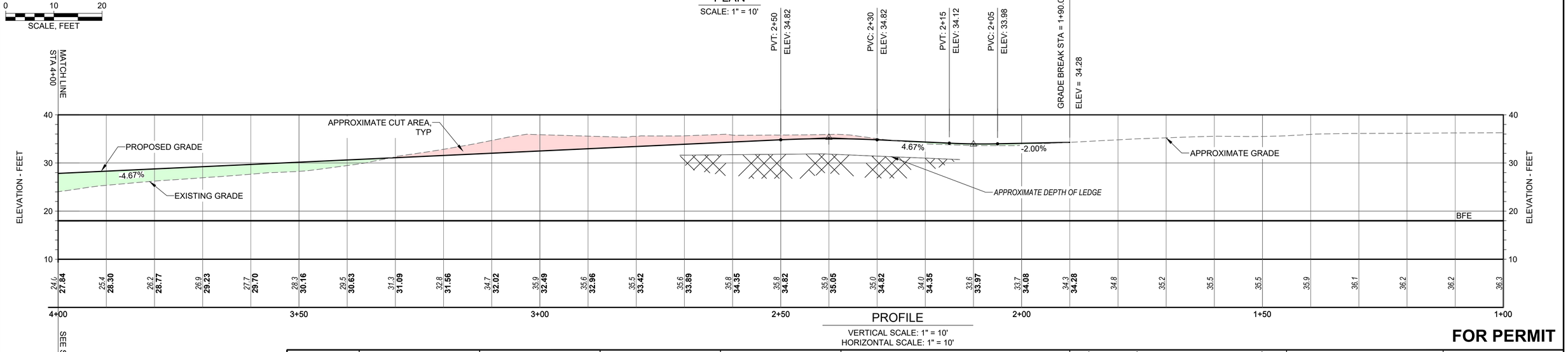

PROFILE

VERTICAL SCALE: 1" = 10'
HORIZONTAL SCALE: 1" = 10'

FOR PERMIT

CUT/FILL ANALYSIS

STRUCTURE	QUANTITY (CY)
CUT	2174.50
FILL	782.30
NET (FILL)	1392.20

Attention:

0 1"

If this scale bar does not measure 1" then drawing is not original scale.

STATE OF MAINE
BRIAN M. MCDEVITT
PE18260
LICENSED
PROFESSIONAL ENGINEER

6/9/2025

Designed:	DJB
Drawn:	JAM
Checked:	BJB
Approved:	BMM
P.E. No:	13033
GEI Project	2203703

GEI Consultants
GEI CONSULTANTS, INC.
5 MILK STREET
PORTLAND, ME 04101
(207)797-8901

UNE
UNIVERSITY OF NEW ENGLAND
11 HILLS BEACH RD.
BIDDEFORD, MAINE

UNIVERSITY OF NEW ENGLAND MARINE SCIENCE CENTER PIER

11 HILLS BEACH ROAD
BIDDEFORD, YORK COUNTY, MAINE

NO	DATE	ISSUE/REVISION	APP
8	6/5/2025	ADDRESS PB COMMENTS	DJB
7	4/16/2025	BIDDEFORD PERMIT APP.	DJB
6	9/17/2024	REVISED PERMIT SET	DJB
5	6/27/2024	REVISED PERMIT SET	DJB
4	9/14/2023	DEP PERMIT SET	DJB
3	6/28/2023	75% DESIGN SUBMISSION	DJB
2	2/15/2023	30% DESIGN SUBMISSION	DJB
1	12/9/2022	15% DESIGN SUB REV	DJB
0	11/11/2022	15% DESIGN SUBMISSION	DJB

SHEET NAME

ACCESS ROAD PLAN AND PROFILE STA 1+00 TO 4+00

SHEET NO.

C-006

DICASTELNUOVO, VINNIE I:\gei\consultants.com\data\Data_Storage\Working\UNIVERSITY OF NEW ENGLAND\2203703 UNE Marine Science Center Pier\00_CAD\Design\Sheets\2203703-C-006 C-007.dwg - 6/9/2025

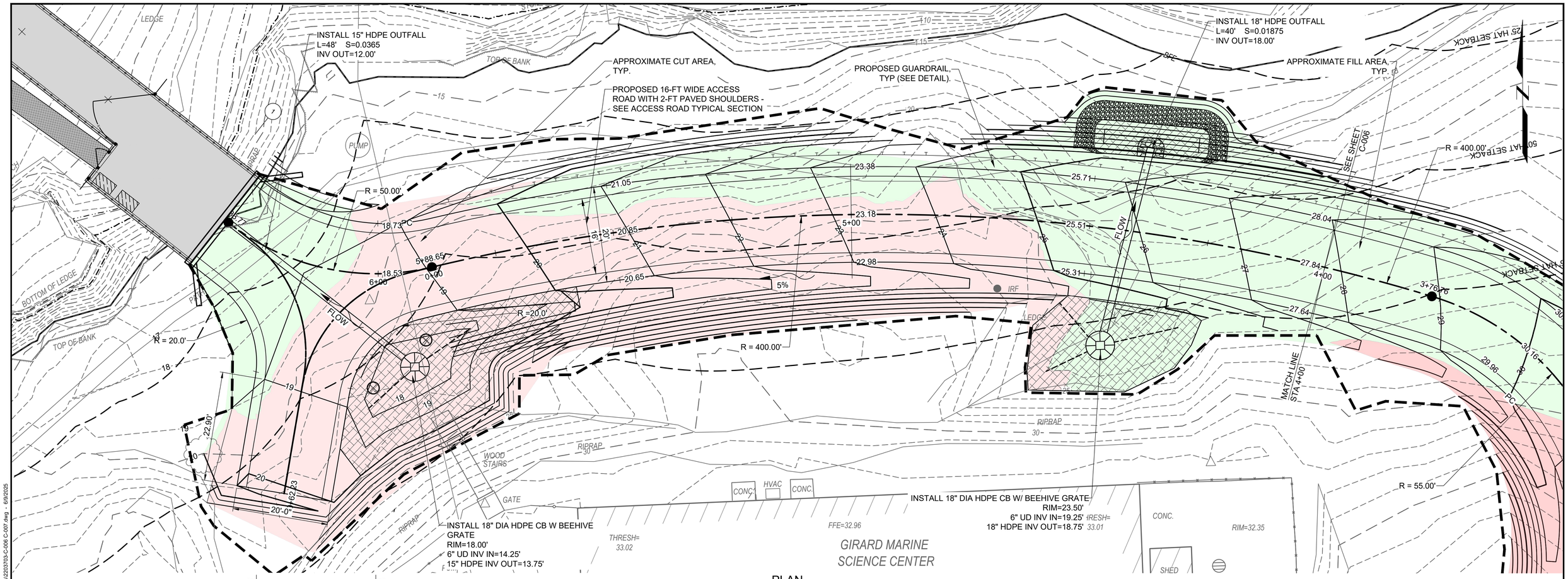

PLAN

SCALE: 1" = 10'

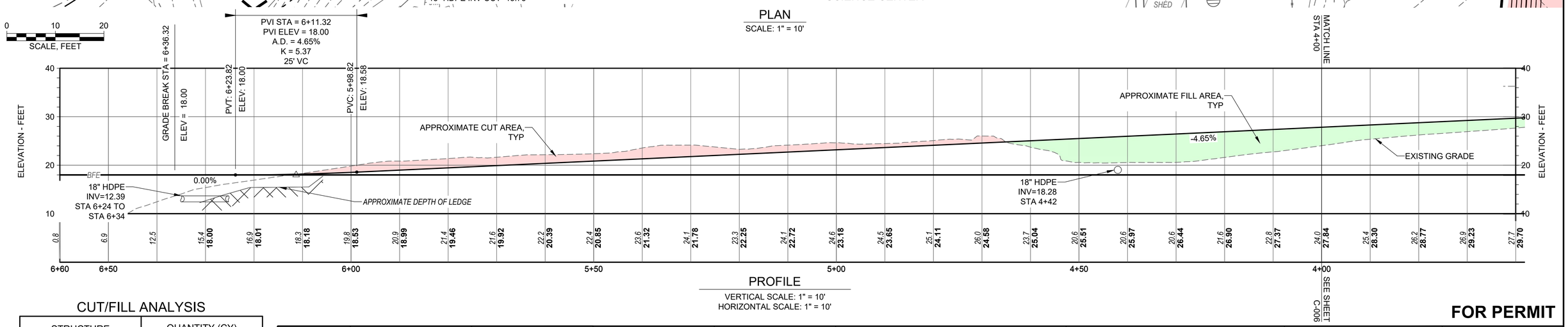

PROFILE

VERTICAL SCALE: 1" = 10'
HORIZONTAL SCALE: 1" = 10'

CUT/FILL ANALYSIS

STRUCTURE	QUANTITY (CY)
CUT	2174.50
FILL	782.30
NET (FILL)	1392.20

FOR PERMIT

Attention: 0 1" If this scale bar does not measure 1" then drawing is not original scale.

STATE OF MAINE BRIAN M. MCDEVITT PE18260 LICENSED PROFESSIONAL ENGINEER

6/9/2025

Designed:	DJB
Drawn:	JAM
Checked:	BJB
Approved:	BMM
P.E. No:	13033
GEI Project	2203703

GEI Consultants
GEI CONSULTANTS, INC.
5 MILK STREET
PORTLAND, ME 04101
(207)797-8901

UNE UNIVERSITY OF NEW ENGLAND
11 HILLS BEACH RD.
BIDDEFORD, MAINE

UNIVERSITY OF NEW ENGLAND MARINE SCIENCE CENTER PIER

11 HILLS BEACH ROAD
BIDDEFORD, YORK COUNTY, MAINE

NO	DATE	ISSUE/REVISION	APP
8	6/5/2025	ADDRESS PB COMMENTS	DJB
7	4/16/2025	BIDDEFORD PERMIT APP.	DJB
6	9/17/2024	REVISED PERMIT SET	DJB
5	6/27/2024	REVISED PERMIT SET	DJB
4	9/14/2023	DEP PERMIT SET	DJB
3	6/28/2023	75% DESIGN SUBMISSION	DJB
2	2/15/2023	30% DESIGN SUBMISSION	DJB
1	12/9/2022	15% DESIGN SUB REV	DJB
0	11/11/2022	15% DESIGN SUBMISSION	DJB

SHEET NAME

ACCESS ROAD PLAN AND PROFILE STA 4+00 TO STA 6+60

SHEET NO.

C-007

DJCASTELNUOVO, VINNIE \\geiconsultants.com\data\Data_Storage\Working\UNIVERSITY OF NEW ENGLAND\2203703 UNE Marine Science Center Pier\00_CAD\Design\Sheets\2203703-C-006 C-007.dwg - 6/9/2025

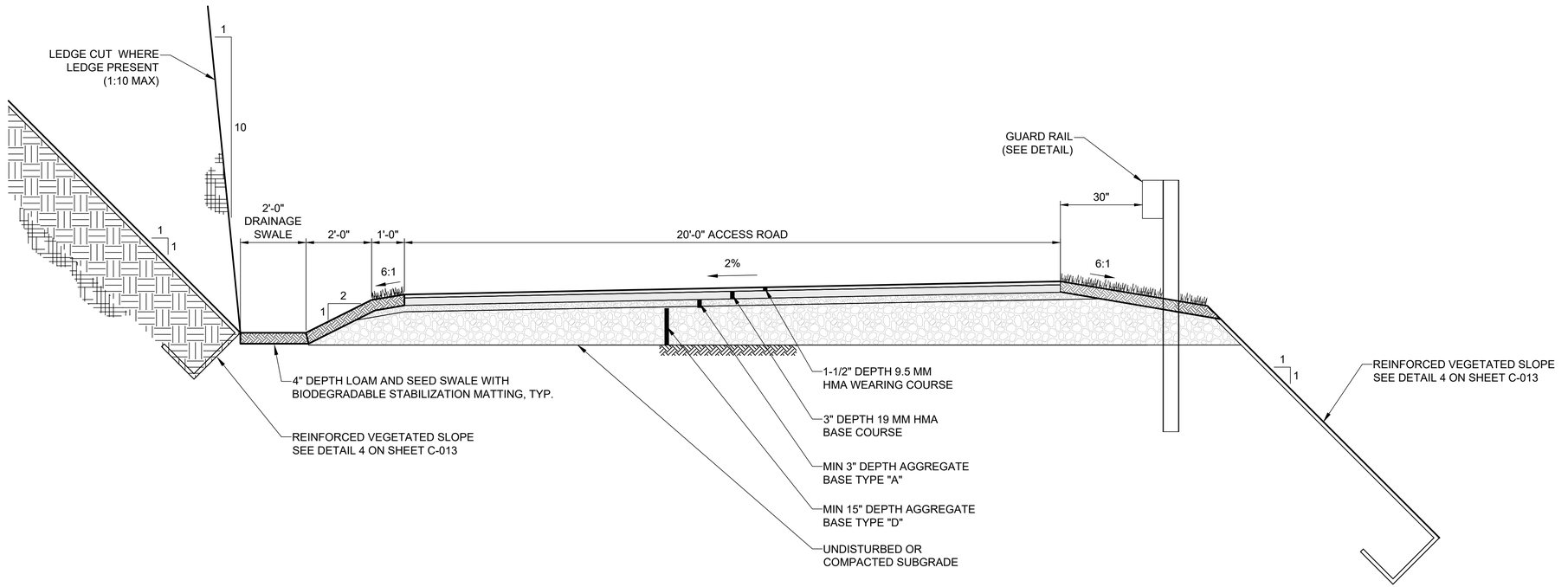

TYPICAL ACCESS ROAD SECTION

SCALE: NTS

FOR PERMIT

Attention:

0 1"

If this scale bar does not measure 1" then drawing is not original scale.

STATE OF MAINE
BRIAN M. MCDEVITT
PE18260
LICENSED
PROFESSIONAL ENGINEER

6/9/2025

Designed:	DJB
Drawn:	JAM
Checked:	BJB
Approved:	BMM
P.E. No:	13033
GEI Project	2203703

GEI Consultants
GEI CONSULTANTS, INC.
5 MILK STREET
PORTLAND, ME 04101
(207)797-8901

UNIVERSITY OF NEW ENGLAND

11 HILLS BEACH RD.
BIDDEFORD, MAINE

UNIVERSITY OF NEW ENGLAND MARINE SCIENCE CENTER PIER

11 HILLS BEACH ROAD
BIDDEFORD, YORK COUNTY, MAINE

NO	DATE	ISSUE/REVISION	APP
8	6/5/2025	ADDRESS PB COMMENTS	DJB
7	4/16/2025	BIDDEFORD PERMIT APP.	DJB
6	9/17/2024	REVISED PERMIT SET	DJB
5	6/27/2024	REVISED PERMIT SET	DJB
4	9/14/2023	DEP PERMIT SET	DJB
3	6/28/2023	75% DESIGN SUBMISSION	DJB
2	2/15/2023	30% DESIGN SUBMISSION	DJB
1	12/9/2022	15% DESIGN SUB REV	DJB
0	11/11/2022	15% DESIGN SUBMISSION	DJB

SHEET NAME

ACCESS ROAD TYPICAL SECTION

SHEET NO.

C-008

D:\CASTELNUOVO, VINNIE \\geiconsultants.com\data\Data_Storage\Working\UNIVERSITY OF NEW ENGLAND\2203703 UNE Marine Science Center Pier\00_CAD\Design\Sheets\2203703-C-008.dwg - 6/9/2025

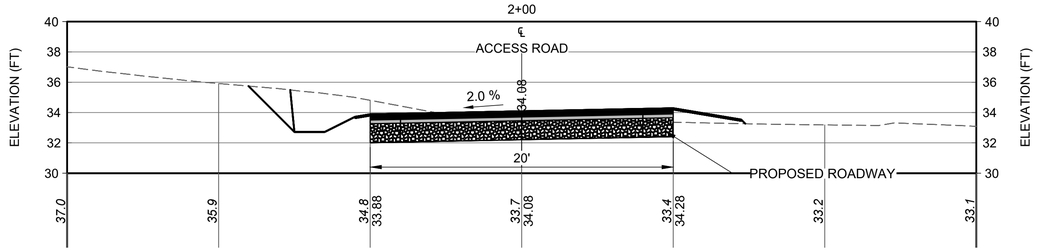

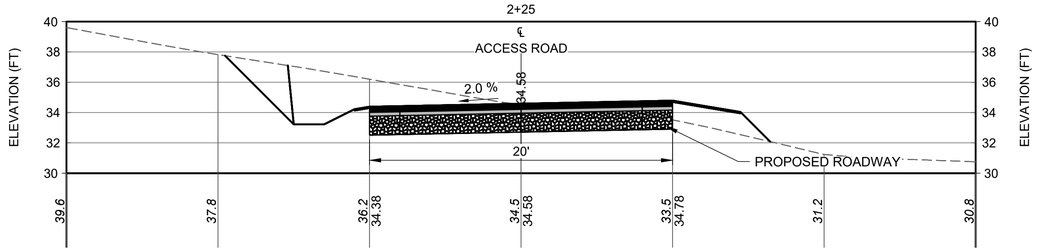

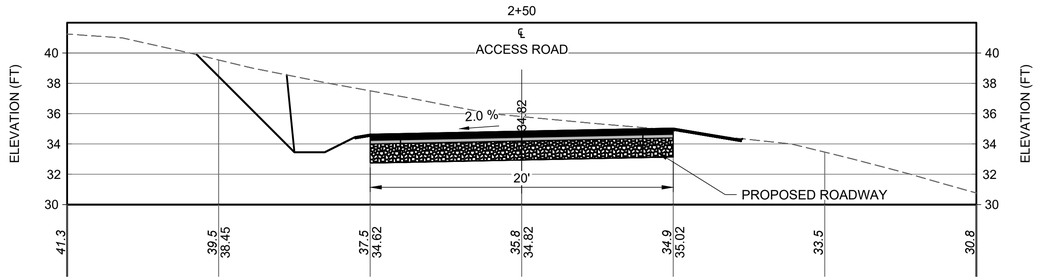

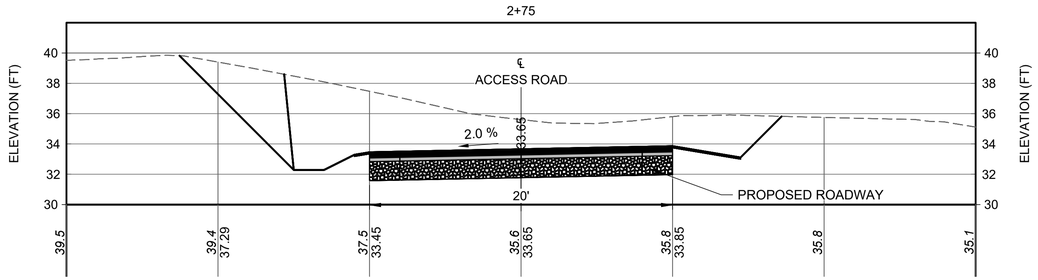

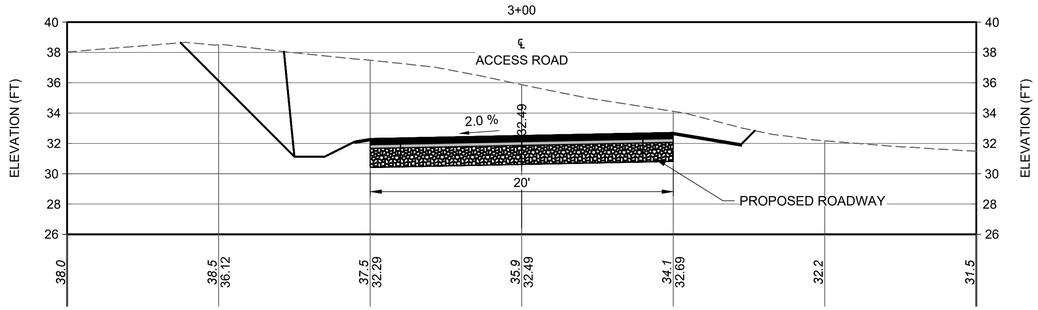

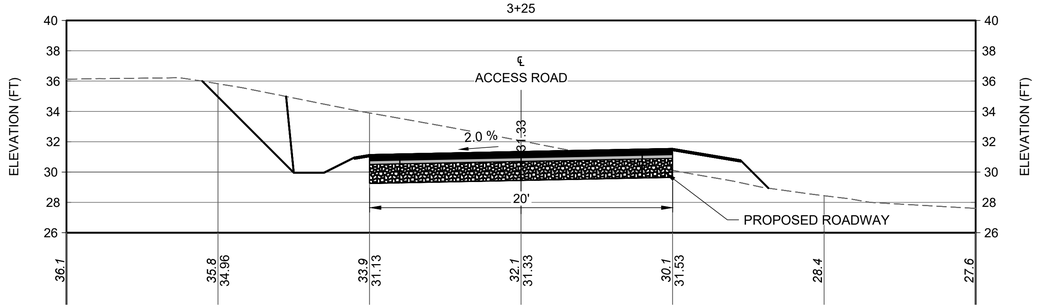

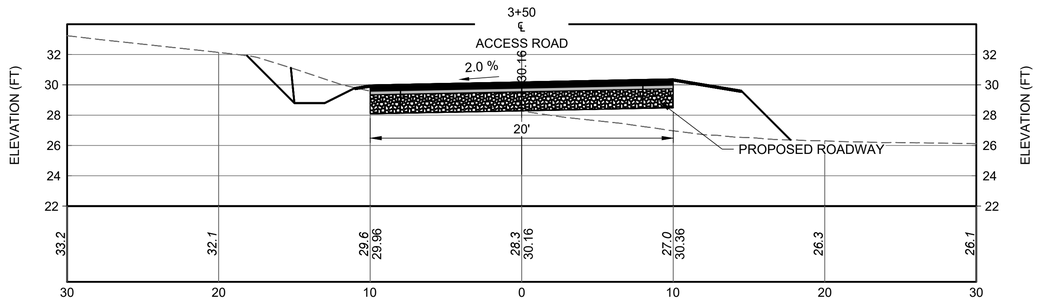

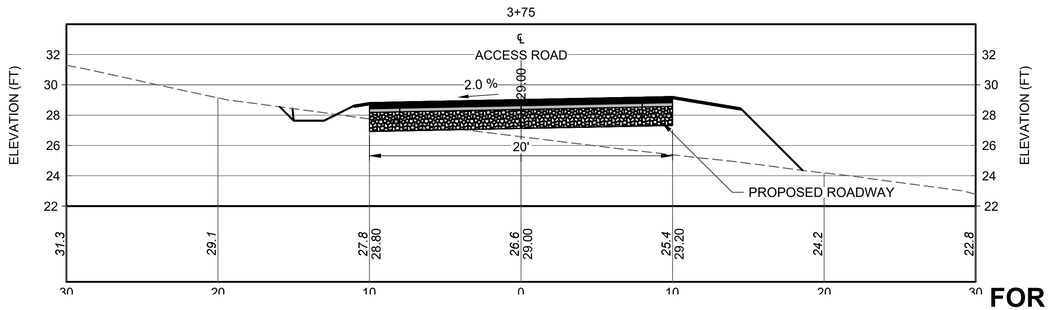

FOR PERMIT

0 2.5 5 10
SCALE, FEET

Attention:
0 1"
If this scale bar does not measure 1" then drawing is not original scale.

STATE OF MAINE
BRIAN M. MCDEVITT
PE18260
LICENSED
PROFESSIONAL ENGINEER
6/9/2025

Designed:	DJB
Drawn:	JAM
Checked:	BJB
Approved:	BMM
P.E. No:	13033
GEI Project	2203703

GEI Consultants
GEI CONSULTANTS, INC.
5 MILK STREET
PORTLAND, ME 04101
(207)797-8901

UNIVERSITY OF NEW ENGLAND
11 HILLS BEACH RD.
BIDDEFORD, MAINE

UNIVERSITY OF NEW ENGLAND MARINE SCIENCE CENTER PIER

11 HILLS BEACH ROAD
BIDDEFORD, YORK COUNTY, MAINE

NO	DATE	ISSUE/REVISION	APP
8	6/5/2025	ADDRESS PB COMMENTS	DJB
7	4/16/2025	BIDDEFORD PERMIT APP.	DJB
6	9/17/2024	REVISED PERMIT SET	DJB
5	6/27/2024	REVISED PERMIT SET	DJB
4	9/14/2023	DEP PERMIT SET	DJB
3	6/28/2023	75% DESIGN SUBMISSION	DJB
2	2/15/2023	30% DESIGN SUBMISSION	DJB
1	12/9/2022	15% DESIGN SUB REV	DJB
0	11/11/2022	15% DESIGN SUBMISSION	DJB

SHEET NAME
ROAD ACCESS SECTIONS STA 2+00 TO 3+75

SHEET NO.
C-009

DiCASTELNUOVO, VINNIE \\geiconsultants.com\data\Data_Storage\Working\UNIVERSITY OF NEW ENGLAND\2203703 UNE Marine Science Center Pier\00_CAD\Design\Sheets\2203703-C-009 C-010.dwg - 6/9/2025

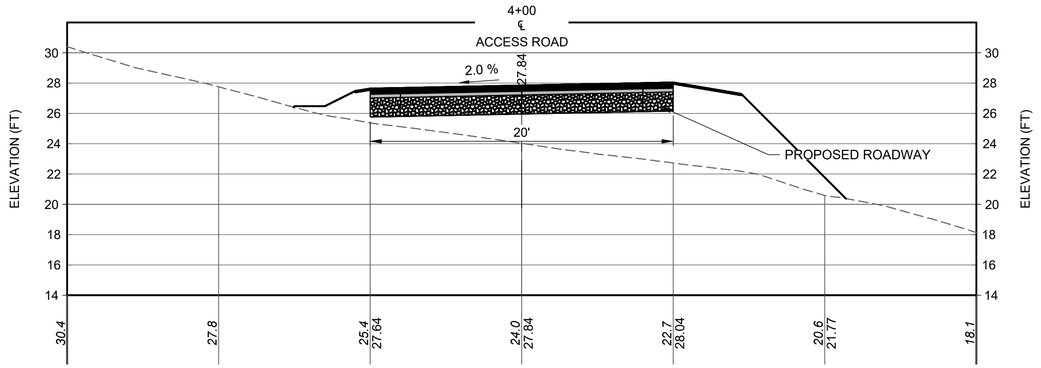

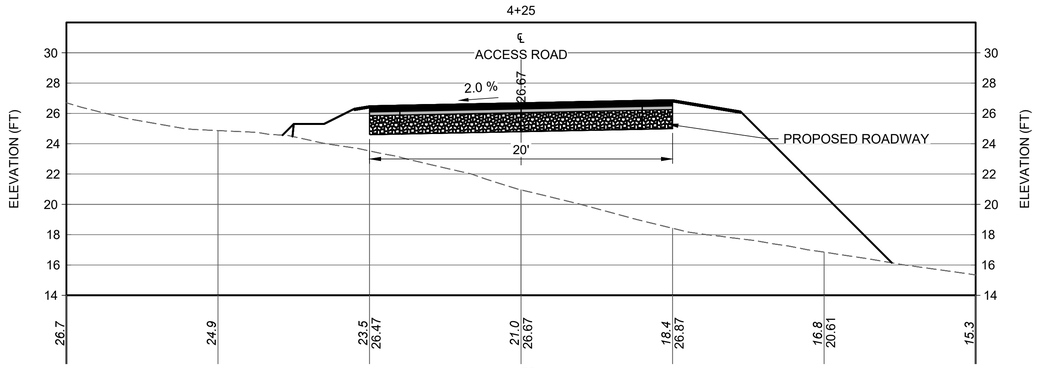

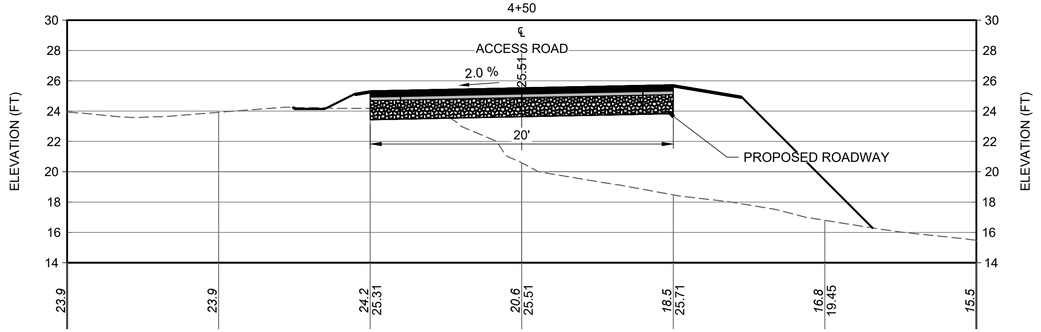

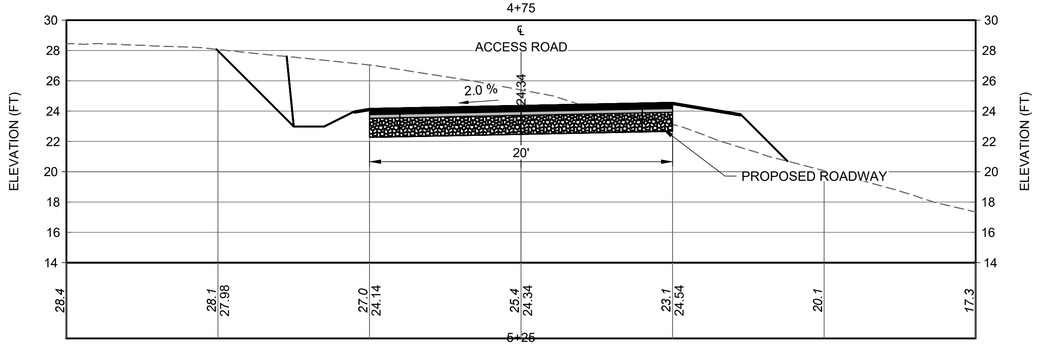

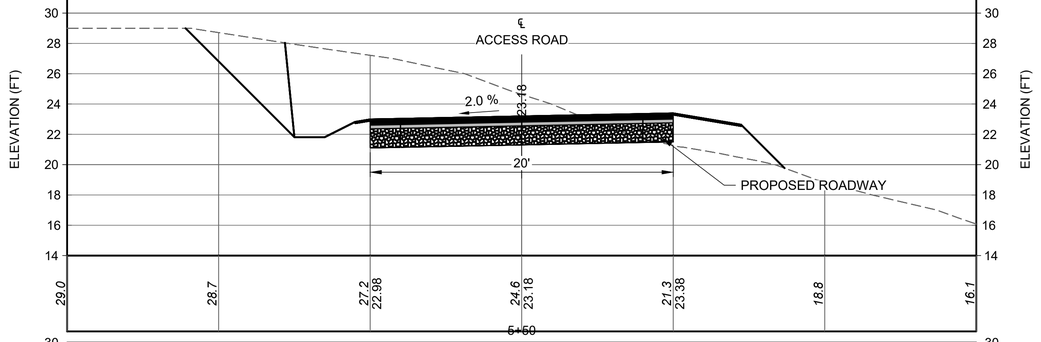

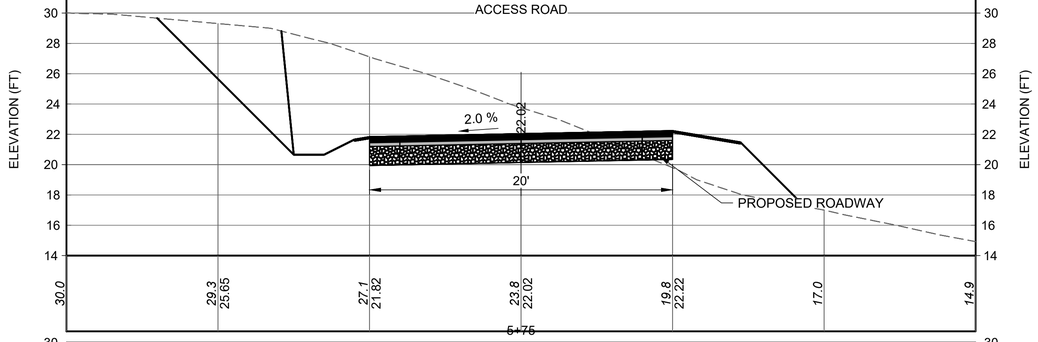

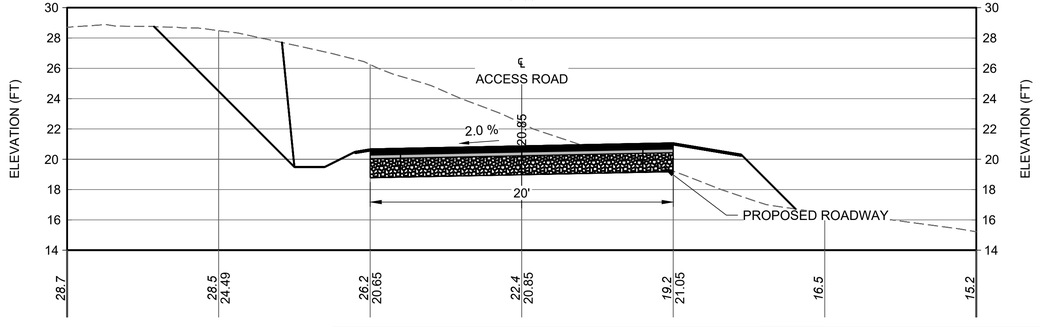

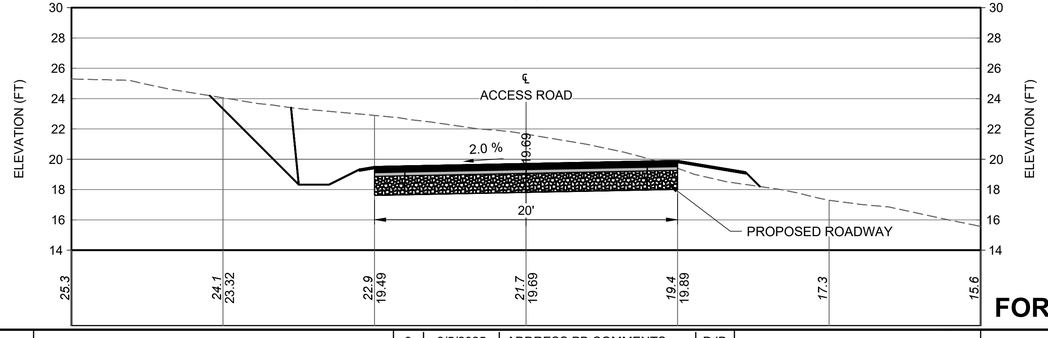

FOR PERMIT

0 2.5 5 10
SCALE, FEET

Attention:
0 1"
If this scale bar does not measure 1" then drawing is not original scale.

STATE OF MAINE
BRIAN M. MCDEVITT
PE18260
LICENSED
PROFESSIONAL ENGINEER
6/9/2025

Designed:	DJB
Drawn:	JAM
Checked:	BJB
Approved:	BMM
P.E. No:	13033
GEI Project	2203703

GEI Consultants
GEI CONSULTANTS, INC.
5 MILK STREET
PORTLAND, ME 04101
(207)797-8901

UNE
UNIVERSITY OF NEW ENGLAND
11 HILLS BEACH RD.
BIDDEFORD, MAINE

UNIVERSITY OF NEW ENGLAND MARINE SCIENCE CENTER PIER

11 HILLS BEACH ROAD
BIDDEFORD, YORK COUNTY, MAINE

NO	DATE	ISSUE/REVISION	APP
8	6/5/2025	ADDRESS PB COMMENTS	DJB
7	4/16/2025	BIDDEFORD PERMIT APP.	DJB
6	9/17/2024	REVISED PERMIT SET	DJB
5	6/27/2024	REVISED PERMIT SET	DJB
4	9/14/2023	DEP PERMIT SET	DJB
3	6/28/2023	75% DESIGN SUBMISSION	DJB
2	2/15/2023	30% DESIGN SUBMISSION	DJB
1	12/9/2022	15% DESIGN SUB REV	DJB
0	11/11/2022	15% DESIGN SUBMISSION	DJB

SHEET NAME

ROAD ACCESS SECTIONS STA 4+00 TO 5+75

SHEET NO.

C-010

DJCASTELNUOVO, VINNIE \\geiconsultants.com\data\Data_Storage\Working\UNIVERSITY OF NEW ENGLAND\2203703 UNE Marine Science Center Pier\00_CAD\Design\Sheets\2203703-C-009 C-010.dwg - 6/9/2025

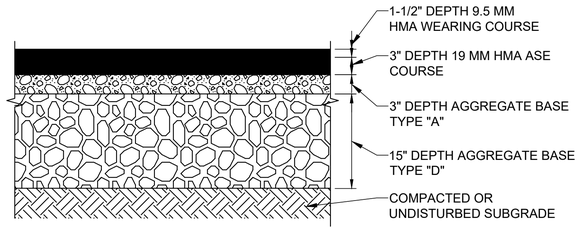

NOTES:
1. PAVEMENT DESIGN SHALL HAVE A MAINEDOT APPROVED JOB MIX FORMULA (JMF) WITHIN THE LATEST CALENDAR YEAR UNLESS OTHERWISE APPROVED BY OWNER.

1 HMA TRAVELWAY/SHOULDER TYPICAL SECTION

NO SCALE

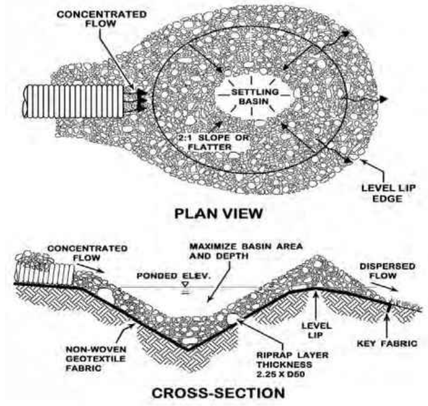

PLUNGE POOL SIZING (minimum)				
SIZE	RIPRAP SIZING (D_{50})	WIDTH At the narrow end of pipe	LENGTH For slow flows (no pressure head)	LENGTH For high flows (with pressure head)
12"	5"	3-4'	4-6'	8-10'
18"	8"	4-6'	6-8'	12-18'
24"	10"	6-8'	8-10'	18-22'
30"	12"	8-10'	12-14'	22-28'
36"	14"	10-12'	14-16'	28-32'

The diameter of the largest stone size in the mix should be about 1.5 times the D_{50} and the smallest one about one half the size. The thickness of riprap should never be less than 2 times the rock D_{50}.

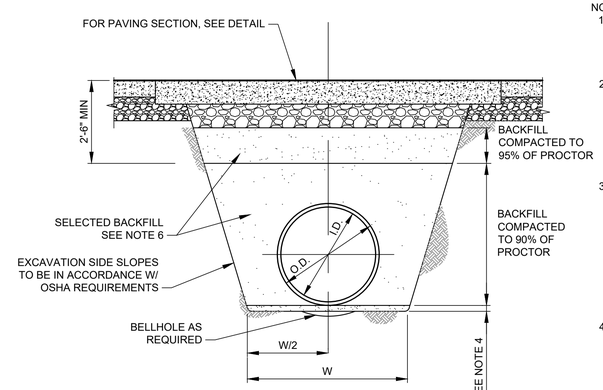

NOTES:
1. TRENCH BOTTOM OR BEDDING FOR ALL PIPE SHALL BE GRADED TO PROVIDE UNIFORM SUPPORT FOR THE ENTIRE LENGTH OF THE PIPE EXCEPT AT BELLHOLES.
2. BELLHOLES FOR PIPES SHALL HAVE A CLEARANCE OF 3" BETWEEN THE BOTTOM OF THE BELLHOLE AND THE EXTERIOR OF THE PIPE BARREL, BUT IN NO CASE SHALL BELLHOLES BE SMALLER THAN REQUIRED TO FACILITATE PLACING OF THE PIPE OR PROPER JOINING OF THE PIPE.
3. COMPACTION BACKFILL SHALL BE COMPACTED TO A DEGREE AT LEAST EQUIVALENT TO THE EXISTING DEGREE OF COMPACTING OF ADJACENT IN-PLACE EARTH MATERIALS AGAINST WHICH SUCH COMPACTED BACKFILL IS TO BE PLACED, OR TO A MIN OF 95% OF THE LABORATORY STANDARD MAX ASTM D698 DENSITY, WHICHEVER IS GREATER.
4. MIN 3" DEEP LAYER OF SCARIFIED MATERIAL WHEN IN HARD MATERIAL. IN UNSUITABLE MATERIAL, OVER EXCAVATE AS DIRECTED BY ENGINEER (6" MIN) AND REPLACE WITH COMPACTED BACKFILL.
5. W = PIPE O.D. + 24" MIN
6. ALL SELECTED BACKFILL IS TO BE IN CONFORMANCE WITH STATE STANDARD SPECIFICATION.

3 TRENCH

NO SCALE

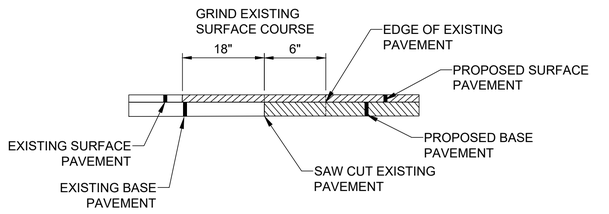

4 HMA PAVEMENT BUTT JOINT

NO SCALE

NOTES:
1. IF THE PIPE DISCHARGES ONTO A FLAT AREA, THE APRON SHOULD HAVE A WIDTH THAT IS THREE TIMES THE OUTLET PIPE'S DIAMETER. IF THE PIPE FLOWS HAVE THE POTENTIAL OF CAUSING A GULLY, A LEVEL SPREADER SHOULD BE PROVIDED.
2. THE CHANNEL SIDE SLOPES SHOULD BE NO STEEPER THAN 2:1. RIPRAP ON THE SIDES OF THE PLUNGE POOL SHOULD EXTEND TO THE TOP OF THE CHANNEL.
3. THE PLUNGE POOL SIZING AND THE MEDIAN SIZED RIPRAP CAN BE DETERMINED FROM THE FOLLOWING TABLE. THE THICKNESS OF RIPRAP SHOULD NOT BE LESS THAN 2 TIMES THE ROCK D50.
4. A GEOTEXTILE OR APPROPRIATE GRAVEL FILTER SHOULD BE USED TO PROTECT AGAINST PIPING OF SOIL FINES FROM BENEATH THE ROCK.
5. IN A CHANNEL THAT CAN BE REVEGETATED, SEED AND MULCH SHOULD BE APPLIED WITHIN 7 DAYS FROM FINAL CONSTRUCTION..

2 PLUNGE POOL

NO SCALE

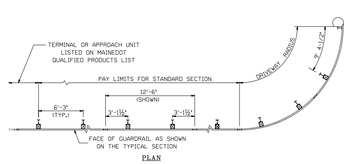

31" W-BEAM GUARDRAIL - MID-WAY SPLICE

Identification letters and numbers on drawings refer to the standard detail drawings shown in "A guide to Standardized Highway Barrier Hardware' by AASHTO-AGC-ARTBA Joint Committee.

GUARDRAIL
606(03)

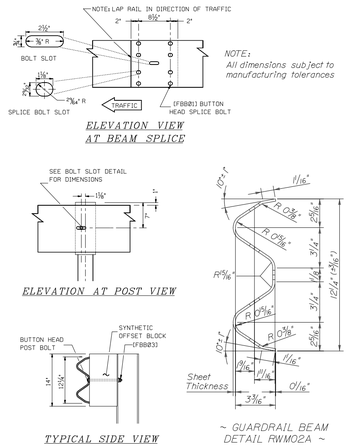

GUARDRAIL
606(04)

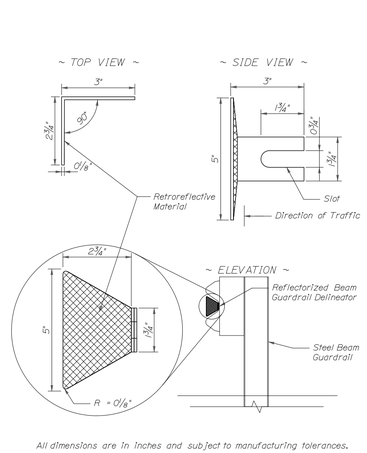

606(07)

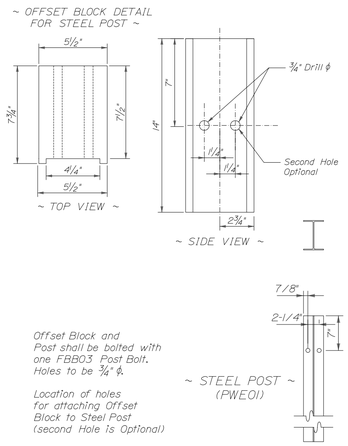

GUARDRAIL
606(06)

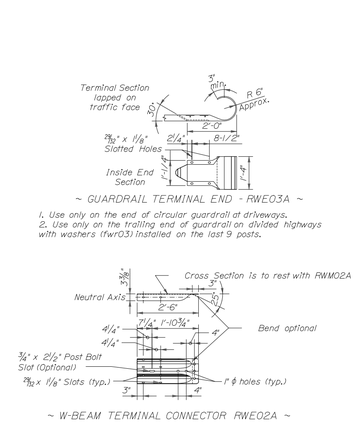

GUARDRAIL
606(05)

5 GUARD RAIL DETAILS

NO SCALE

FOR PERMIT

Attention:
0 1"
If this scale bar does not measure 1" then drawing is not original scale.

STATE OF MAINE BRIAN M. MCDEVITT PE18260 LICENSED PROFESSIONAL ENGINEER
6/9/2025

Designed:	DJB
Drawn:	JAM
Checked:	BJB
Approved:	BMM
P.E. No:	13033
GEI Project	2203703

GEI Consultants
GEI CONSULTANTS, INC.
5 MILK STREET
PORTLAND, ME 04101
(207)797-8901

UNIVERSITY OF NEW ENGLAND
11 HILLS BEACH RD.
BIDDEFORD, MAINE

UNIVERSITY OF NEW ENGLAND MARINE SCIENCE CENTER PIER
11 HILLS BEACH ROAD
BIDDEFORD, YORK COUNTY, MAINE

NO	DATE	ISSUE/REVISION	APP
8	6/5/2025	ADDRESS PB COMMENTS	DJB
7	4/16/2025	BIDDEFORD PERMIT APP.	DJB
6	9/17/2024	REVISED PERMIT SET	DJB
5	6/27/2024	REVISED PERMIT SET	DJB
4	9/14/2023	DEP PERMIT SET	DJB
3	6/28/2023	75% DESIGN SUBMISSION	DJB
2	2/15/2023	30% DESIGN SUBMISSION	DJB
1	12/9/2022	15% DESIGN SUB REV	DJB
0	11/11/2022	15% DESIGN SUBMISSION	DJB

SHEET NAME: **SITE DETAILS**

SHEET NO.: **C-011**

DJCASTELNUOVO, VINNIE \\geiconsultants.com\data\Data_Storage\Working\UNIVERSITY OF NEW ENGLAND\2203703 UNE Marine Science Center Pier\00_CAD\Design\Sheets\2203703-C-DETAILS.dwg - 6/9/2025

EROSION AND SEDIMENTATION CONTROL NOTES:

INTRODUCTION

THE FOLLOWING PLAN FOR CONTROLLING SEDIMENTATION AND EROSION IN THIS PROJECT IS BASED ON CONSERVATION PRACTICES FOUND IN THE MAINE EROSION & SEDIMENT CONTROL BMPS MANUAL, OCTOBER 2016, AND MAINE EROSION AND SEDIMENT CONTROL PRACTICE FIELD GUIDE FOR CONTRACTORS, REVISED 2014, MAINE DEPARTMENT OF ENVIRONMENTAL PROTECTION. THE CONTRACTOR WHO IMPLEMENTS THIS PLAN SHALL BE FAMILIAR WITH THESE PUBLICATIONS AND ADHERE TO THEM AND THE PRACTICES PRESENTED HEREIN REFERENCE IS MADE TO THE EROSION CONTROL PLANS AND DETAILS (C-005 AND C-013) WITHIN THE PLAN SET, SHOWING THE LOCATIONS AND TYPES OF PROPOSED MEASURES TO BE IMPLEMENTED.

GENERAL EROSION AND SEDIMENTATION CONTROL NOTES:

1. EROSION AND SEDIMENTATION CONTROL MEASURES ARE PROPOSED TO CONTROL ACCELERATED EROSION AND SEDIMENTATION AND REDUCE ADVERSE IMPACTS FROM RUNOFF AND EROSION AT THE WORK SITE.
2. APPLICATION OF TEMPORARY AND PERMANENT EROSION CONTROL MEASURES SHALL BE IN ACCORDANCE WITH THE LATEST EDITION OF THE MAINE EROSION AND SEDIMENT CONTROL BMP'S PUBLISHED BY MAINE DEP AND AVAILABLE AT: HTTPS://WWW.MAINE.GOV/DEP/LAND/EROSION/ESCBMPS/
3. THE WORK SHALL BE PERFORMED BY A CONTRACTOR THAT IS CERTIFIED BY MAINE DEP IN EROSION AND SEDIMENT CONTROL MEASURES. A CERTIFIED INDIVIDUAL SHALL BE ONSITE DURING ALL CONSTRUCTION ACTIVITY.
4. EROSION AND SEDIMENTATION DUE TO RUNOFF, TIDAL EXPOSURE, AND WAVE ACTION SHALL BE CONTROLLED BY STAGING CONSTRUCTION ACTIVITY TO MINIMIZE AREA AND TIME OF DISTURBANCE, APPLICATION OF SILT FENCE, BARRIERS, AND OTHER EROSION CONTROL MEASURES, AND PRESERVING NATURAL VEGETATION WHENEVER POSSIBLE.
5. THE CONTRACTOR'S SEQUENCE OF OPERATIONS AND SCHEDULE FOR WORK ACTIVITIES SHALL ACT TO MINIMIZE EXPOSURE TO EROSION.
6. THE CONTRACTOR SHALL TAKE CARE TO LIMIT THE AREA OF SOIL DISTURBANCE TO THE MINIMUM NECESSARY TO COMPLETE THE WORK.
7. EROSION CONTROL MEASURES, SEEDING, AND VEGETATION SHALL BE INSPECTED WEEKLY AND AFTER RAINSTORMS, RUNOFF EVENTS, AND STORM EVENTS UNTIL FINAL ACCEPTANCE. REPAIRS SHALL BE MADE WHEN NO LONGER SERVICEABLE DUE TO DAMAGE OR ACCUMULATION OF SEDIMENT.
8. AT THE COMPLETION OF CONSTRUCTION, ALL DISTURBED AREAS SHALL BE RESTORED TO THEIR ORIGINAL CONDITION AND CONTOUR, UNLESS OTHERWISE INDICATED ON THE PLANS.

GENERAL EROSION AND SEDIMENTATION CONTROL PRACTICES

THE FOLLOWING IS A LIST OF GENERAL EROSION CONTROL PRACTICES THAT WILL BE USED TO PREVENT EROSION AND SEDIMENTATION BEFORE, DURING AND AFTER THE CONSTRUCTION OF THIS PROJECT. IN ADDITION, SPECIAL CARE SHALL BE USED AT ALL TIMES TO:

LIMIT DISTURBANCE AND, HENCE, EROSION

1. CORRECT ANY EROSION PROBLEMS IMMEDIATELY.
2. REGULARLY MONITOR THE IMPLEMENTED PRACTICES, ESPECIALLY AFTER EVERY RAINFALL.
3. REVEGETATE DISTURBED AREAS AS SOON AS POSSIBLE AFTER CONSTRUCTION.
4. CONFORM TO ALL REQUIREMENTS/STANDARDS OF THE SITE'S MAINE DEP EROSION & SEDIMENT CONTROL BMP MANUAL.

SILT FENCE AND/OR EROSION CONTROL MIX SEDIMENT BARRIERS

SILT FENCE AND/OR EROSION CONTROL MIX SEDIMENT BARRIERS WILL BE INSTALLED ALONG THE DOWN GRADIENT SIDE OF THE PROPOSED GROUND DISTURBANCE AREAS PRIOR TO ANY CONSTRUCTION ACTIVITIES WHERE SLOPES EXCEED 8% OR THERE IS FLOWING WATER BOTH SILT FENCE AND EROSION CONTROL MATTING BERMS SHALL BE USED.

CATCH BASIN PROTECTION

CATCH BASIN PROTECTION WILL BE INSTALLED AT THE FIRST DOWNGRADIENT CATCH BASIN IN STREET ADJACENT TO ANY CONSTRUCTION ACTIVITIES AND IN ALL ONSITE CATCH BASINS UNTIL SITE HAS BEEN COMPLETELY STABILIZED.

CONSTRUCTION PHASE

THE FOLLOWING GENERAL PRACTICES WILL BE IMPLEMENTED TO PREVENT EROSION DURING CONSTRUCTION ON THIS PROJECT:

1. EROSION AND SEDIMENTATION CONTROL BMPS SHALL BE INTALLED PRIOR TO THE COMMENCEMENT OF EARTHWORK ACTIVITIES.
2. ONLY THOSE AREAS UNDER ACTIVE CONSTRUCTION WILL BE CLEARED AND LEFT IN AN UNTREATED OR UNVEGETATED CONDITION. AN AREA NO LARGER THAN WHAT CAN BE MULCHED IN ONE DAY MAY BE OPEN AT ONCE. ONCE CONSTRUCTION OF AN AREA IS COMPLETE, FINAL GRADING, LOAMING AND SEEDING SHALL OCCUR IMMEDIATELY (REFER TO "POST CONSTRUCTION REVEGETATION" SECTION). IF DURING FINAL GRADING, LOAMING AND SEEDING CAN NOT OCCUR IMMEDIATELY, IT SHALL BE DONE PRIOR TO ANY STORM EVENT AND WITHIN 15 DAYS OF COMPLETING CONSTRUCTION IN THE AREA. IF FINAL GRADING, LOAMING AND SEEDING CANNOT OCCUR WITHIN 7 DAYS, OR IF THE AREA IS NOT UNDER ACTIVE CONSTRUCTION FOR A PERIOD LONGER THAN 7 DAYS, SEE ITEM NO. 4 BELOW.
3. PRIOR TO THE START OF CONSTRUCTION IN A SPECIFIC AREA, SILT FENCING SHALL BE INSTALLED ON DOWNGRADIENT PORTIONS OF THE SITE AS LOCATED ON THE PLANS TO PROTECT AGAINST ANY CONSTRUCTION RELATED EROSION.
4. TOPSOIL WILL BE STOCKPILED WHEN NECESSARY IN AREAS WHICH HAVE MINIMUM POTENTIAL FOR EROSION AND WILL BE KEPT AS FAR AS POSSIBLE FROM EXISTING DRAINAGE AREAS AND WETLANDS. ALL STOCKPILES EXPECTED TO REMAIN LONGER THAN 7 DAYS SHALL BE:
   A. TREATED WITH ANCHORED MULCH (WITHIN 5 DAYS OF THE LAST DEPOSIT OF STOCKPILED SOIL).
   B. SEEDED WITH CONSERVATION MIX AND MULCHED IMMEDIATELY.
   C. STOCKPILES SHALL BE EITHER PLACED UPHILL OF AN EXISTING SEDIMENT BARRIER ON THE SITE OR ENCIRCLED BY A HAY BALE OR SILT FENCE BARRIER THE FIRST DAY THAT STOCKPILING COMMENCES.
5. ALL DISTURBED AREAS EXPECTED TO REMAIN LONGER THAN 7 DAYS SHALL BE:
   A. TREATED WITH STRAW AT A RATE OF 70-90 LBS. PER 1000 SQUARE FEET FROM 4/16 TO 10/1, OR AT A RATE OF 150-200 LBS. PER 1000 SQUARE FEET FROM 10/1 TO 4/15.
   B. SEEDED WITH CONSERVATION MIX OF PERENNIAL RYE GRASS (1.0 LBS/1000 SQ.FT.) AND MULCHED IMMEDIATELY. FROM 10/1 TO 4/15, FOLLOW THE SEEDING RATES AS OUTLINED BELOW IN SUB-SECTION 4.D. OF THE "POST CONSTRUCTION REVEGETATION" SECTION.
   C. MONITORED EVERY TWO WEEKS UNTIL SEEDING CAN OCCUR AND REMULCHED AS NEEDED TO PROTECT SLOPES.
6. ALL GRADING WILL BE HELD TO A MAXIMUM 3:1 SLOPE WHERE PRACTICAL. GREATER SLOPES MAY BE USED WHERE THE BANKS ARE PROTECTED WITH SOFT ARMOUR MATTING, EROSION CONTROL MATTING, OR RIPRAP. ALL SLOPES WILL BE STABILIZED WITH PERMANENT SEEDING IMMEDIATELY AFTER FINAL GRADING IS COMPLETE. (IT IS UNDERSTOOD THAT IMMEDIATELY MEANS WITHIN 5 DAYS OF THE COMPLETION OF WORK. SEE POST-CONSTRUCTION REVEGETATION FOR SEEDING SPECIFICATION).
7. APPLICATION RATE MUST BE 2 BALES (70-90 LBS.) PER 1,000 SQUARE FEET OR 1.5 TO 2 TONS (90-100 BALES) PER ACRE TO COVER 75 TO 90% OF THE GROUND SURFACE. DRIVE OVER WITH TRACKED CONSTRUCTION EQUIPMENT ON GRADES OF 5% AND LESS.
8. CONSTRUCTION TRAFFIC WILL BE DIRECTED OVER THE EXISTING SITE ENTRANCE. THE ROAD SHALL BE SWEPT AND VACUUMED DAILY SHOULD SEDIMENT BE TRACKED ONTO IT.
9. ALL AREAS DRAINING TO A STORMWATER FILTER OR BMP SHALL BE STABILIZED PRIOR TO CONSTRUCTION OF FILTER MEDIA TO PREVENT SEDIMENT FROM CLOGGING MEDIA.

DEWATERING

1. ALL DEWATERING DISCHARGE LOCATIONS SHALL BE LOCATED ON RELATIVELY FLAT GROUND AT LEAST 75' FROM STREAMS AND 25' FROM WETLANDS. THE CONTRACTOR SHALL UTILIZE DIRTBAGS, EROSION CONTROL MIX BERMS, OR SIMILAR METHODS FOR FILTRATION OF DEWATERING AND SHALL CONFORM TO THE MAINE EROSION AND SEDIMENT CONTROL BMPS G-1, G-2, AND G-3.

POST CONSTRUCTION REVEGETATION

THE FOLLOWING GENERAL PRACTICES WILL BE IMPLEMENTED TO PREVENT EROSION AS SOON AS AN AREA IS READY TO UNDERGO FINAL GRADING:

1. A MINIMUM OF 6" OF LOAM WILL BE SPREAD OVER DISTURBED AREAS AND GRADED TO A UNIFORM DEPTH AND NATURAL APPEARANCE.
2. LAWN AREAS: "PARK MIX" GRASS SEED BY ALLEN, STERLING & LOTHROP (FALMOUTH, MAINE), OR APPROVED EQUAL.
3. MULCH SHALL BE HAY OR STRAW MULCHES THAT ARE DRY AND FREE FROM UNDESIRABLE SEEDS AND COURSE MATERIALS.
   A. APPLICATION RATE MUST BE 2 BALES (70-90 LBS.) PER 1,000 SQUARE FEET OR 1.5 TO 2 TONS (90-100 BALES) PER ACRE TO COVER 75 TO 90% OF THE GROUND SURFACE.
   B. DRIVE OVER WITH TRACKED CONSTRUCTION EQUIPMENT ON GRADES OF 5% AND LESS.
   C. BLANKET WITH TACKED PHOTODEGRADABLE/BIODEGRADABLE NETTING ON GRADES GREATER THAN 5%.
4. HYDRO-MULCH SHALL CONSIST OF A MIXTURE OF ASPHALT, WOOD FIBRE OR PAPER FIBRE AND WATER, WHICH IS SPRAYED OVER A SEEDED AREA. HYDRO-MULCH SHALL NOT BE USED BETWEEN 10/1 AND 4/15.
5. CONSTRUCTION SHALL BE PLANNED TO ELIMINATE THE NEED FOR SEEDING BETWEEN OCTOBER 1ST AND APRIL 15TH. SHOULD SEEDING BE NECESSARY BETWEEN THESE DATES, THE FOLLOWING PROCEDURE SHALL BE FOLLOWED:
   A. ONLY UNFROZEN LOAM SHALL BE USED.
   B. LOAMING, SEEDING AND MULCHING WILL NOT BE DONE OVER SNOW OR ICE COVER. IF SNOW EXISTS, IT MUST BE REMOVED PRIOR TO PLACEMENT OF SEED.
   C. WHERE PERMANENT SEEDING IS NECESSARY, ANNUAL WINTER RYE (1.2 LBS/1000 S.F.) SHALL BE SOWN INSTEAD OF THE PREVIOUSLY NOTED SEEDING RATE.
   D. WHERE TEMPORARY SEEDING IS REQUIRED, ANNUAL WINTER RYE (2.5 LBS/1000 S.F.) SHALL BE SOWN INSTEAD OF THE PREVIOUSLY NOTED SEEDING RATE.
   E. FERTILIZING, SEEDING AND MULCHING SHALL BE DONE ON LOAM THE DAY THE LOAM IS SPREAD.
   F. HAY MULCH SHALL BE SECURED WITH PHOTODEGRADABLE/BIODEGRADABLE NETTING. TRACKING BY MACHINERY ALONE WILL NOT SUFFICE. WINTER MULCHING RATES, SHALL BE DOUBLE AS SPECIFIED ABOVE IN SUBSECTION 3.A OF THE "POST CONSTRUCTION REVEGETATION" SECTION, SHOULD BE APPLIED DURING THIS PERIOD.
6. FOLLOWING FINAL SEEDING, THE SITE WILL BE INSPECTED EVERY 30 DAYS UNTIL 90% COVER HAS BEEN ESTABLISHED. RESEEDING WILL BE CARRIED OUT BY THE CONTRACTOR WITHIN 10 DAYS OF NOTIFICATION BY THE DESIGN PROFESSIONAL THAT THE EXISTING CATCH IS INADEQUATE.

MONITORING SCHEDULE

THE CONTRACTOR SHALL BE RESPONSIBLE FOR INSTALLING, MONITORING, MAINTAINING, REPAIRING, REPLACING AND REMOVING ALL OF THE EROSION AND SEDIMENTATION CONTROLS OR APPOINTING A QUALIFIED SUBCONTRACTOR TO DO SO. MAINTENANCE MEASURES WILL BE APPLIED AS NEEDED DURING THE ENTIRE CONSTRUCTION CYCLE. IMMEDIATELY FOLLOWING ANY SIGNIFICANT RAINFALL, AND AT LEAST ONCE A WEEK, A VISUAL INSPECTION WILL BE MADE OF ALL EROSION AND SEDIMENTATION CONTROLS AS FOLLOWS:

1. SILT FENCE SHALL BE INSPECTED AND REPAIRED. SEDIMENT TRAPPED BEHIND THESE BARRIERS SHALL BE EXCAVATED WHEN IT REACHES A DEPTH OF 6" AND REDISTRIBUTED TO AREAS UNDERGOING FINAL GRADING.
2. CONSTRUCTION ENTRANCE SHALL BE VISUALLY INSPECTED AND REPAIRED AS NEEDED. ANY AREAS SUBJECT TO RUTTING SHALL BE STABILIZED IMMEDIATELY. IF THE VOIDS OF THE CONSTRUCTION ENTRANCE BECOME FILLED WITH MUD, MORE CRUSHED STONE SHALL BE ADDED AS NEEDED. THE PUBLIC ROADWAY SHALL BE SWEPT AND VACUUMED SHOULD MUD BE DEPOSITED/TRACKED ONTO THEM.

STANDARDS FOR STABILIZING SITES FOR THE WINTER

THE FOLLOWING STANDARDS AND METHODOLOGIES SHALL BE USED FOR STABILIZING THE SITE DURING THE WINTER CONSTRUCTION PERIOD:

1. STANDARD FOR THE TIMELY STABILIZATION OF DISTURBED SLOPES (ANY AREA HAVING A GRADE GREATER THAN 25%) - THE CONTRACTOR WILL SEED AND MULCH ALL SLOPES TO BE VEGETATED BY SEPTEMBER 15TH. IF THE CONTRACTOR FAILS TO STABILIZE ANY SLOPE TO BE VEGETATED BY SEPTEMBER 15TH, THEN THE CONTRACTOR WILL TAKE ONE OF THE FOLLOWING ACTIONS TO STABILIZE THE SLOPE FOR LATE FALL AND WINTER.
   A. STABILIZE THE SOIL WITH TEMPORARY VEGETATION AND EROSION CONTROL MATS: BY OCTOBER 1ST THE CONTRACTOR WILL SEED THE DISTURBED SLOPE WITH WINTER RYE AT A RATE OF 3 POUNDS PER 1000 SQUARE FEET AND THEN INSTALL EROSION CONTROL MATS OR ANCHORED HAY MULCH OVER THE SEEDING AT TWICE THE RATE AS SPECIFIED ABOVE IN SUBSECTION 3.A OF THE "POST CONSTRUCTION REVEGETATION" SECTION. THE CONTRACTOR WILL MONITOR GROWTH OF THE RYE OVER THE NEXT 30 DAYS.
   B. STABILIZE THE SLOPE WITH WOOD-WASTE COMPOST: THE CONTRACTOR WILL PLACE A SIX-INCH LAYER OF WOOD-WASTE COMPOST ON THE SLOPE BY NOVEMBER 15TH. THE CONTRACTOR WILL NOT USE WOOD-WASTE COMPOST TO STABILIZE SLOPES HAVING GRADES GREATER THAN 50% (2H:IV) OR HAVING GROUNDWATER SEEPS ON THE SLOPE FACE.
   C. STABILIZE THE SLOPE WITH STONE RIPRAP: THE CONTRACTOR WILL PLACE A LAYER OF STONE RIPRAP ON THE SLOPE BY NOVEMBER 15TH. THE DEVELOPMENT'S OWNER WILL HIRE A REGISTERED PROFESSIONAL ENGINEER TO DETERMINE THE STONE SIZE NEEDED FOR STABILITY ON THE SLOPE AND TO DESIGN A FILTER LAYER FOR UNDERNEATH THE RIPRAP.

STANDARD FOR THE TIMELY STABILIZATION OF DISTURBED SOILS - BY SEPTEMBER 15TH THE CONTRACTOR WILL SEED AND MULCH ALL DISTURBED SOILS ON THE SITE. IF THE CONTRACTOR FAILS TO STABILIZE THESE SOILS BY THIS DATE, THEN THE CONTRACTOR WILL TAKE ON OF THE FOLLOWING ACTIONS TO STABILIZE THE SOIL FOR LATE FALL AND WINTER.

   A. STABILIZE THE SOIL WITH TEMPORARY VEGETATION: BY OCTOBER 1ST THE CONTRACTOR WILL SEED THE DISTURBED SOIL WITH WINTER RYE AT A SEEDING RATE OF 3 POUNDS PER 1000 SQUARE FEET, LIGHTLY MULCH THE SEEDED SOIL WITH HAY OR STRAW AT 75 POUNDS PER 1000 SQUARE FEET, AND ANCHOR THE MULCH WITH PLASTIC NETTING. THE CONTRACTOR WILL MONITOR GROWTH OF THE RYE OVER THE NEXT 30 DAYS. IF THE RYE FAILS TO GROW AT LEAST THREE INCHES OR FAILS TO COVER AT LEAST 75% OF THE DISTURBED SOIL BEFORE NOVEMBER, 1, THEN THE CONTRACTOR WILL MULCH THE AREA FOR OVER-WINTER PROTECTION AS DESCRIBED IN ITEM III OF THIS STANDARD.
   B. STABILIZE THE SOIL WITH SOD: THE CONTRACTOR WILL STABILIZE THE DISTURBED SOIL WITH PROPERLY INSTALLED SOD BY OCTOBER 1ST. PROPER INSTALLATION INCLUDES THE CONTRACTOR PINNING THE SOD ONTO THE SOIL WITH WIRE PINS, ROLLING THE SOD TO GUARANTEE CONTACT BETWEEN THE SOD AND UNDERLYING SOIL, AND WATERING THE SOD TO PROMOTE ROOT GROWTH INTO THE DISTURBED SOIL.
   C. STABILIZE THE SOIL WITH MULCH: BY NOVEMBER 15TH THE CONTRACTOR WILL MULCH THE DISTURBED SOIL BY SPREADING HAY OR STRAW AT A RATE OF AT LEAST 150 POUNDS PER 1000 SQUARE FEET ON THE AREA SO THAT NO SOIL IS VISIBLE THROUGH THE MULCH. IMMEDIATELY AFTER APPLYING THE MULCH, THE CONTRACTOR WILL ANCHOR THE MULCH WITH NETTING OR OTHER METHOD TO PREVENT WIND FROM MOVING THE MULCH OFF THE DISTURBED SOIL.

EROSION CONTROL REMOVAL

AN AREA IS CONSIDERED STABLE IF IT IS PAVED OR IF 90% GROWTH OF PLANTED SEEDS IS ESTABLISHED. ONCE AN AREA IS CONSIDERED STABLE, THE EROSION CONTROL MEASURES CAN BE REMOVED AS FOLLOWS:

1. SILT FENCE: SILT FENCE SHALL BE DISPOSED OF LEGALLY AND PROPERLY OFF-SITE. ALL SEDIMENT TRAPPED BEHIND THESE CONTROLS SHALL BE DISTRIBUTED TO AN AREA UNDERGOING FINAL GRADING OR REMOVED AND RELOCATED OFF-SITE.
2. STABILIZED CONSTRUCTION ENTRANCE: THE STABILIZED CONSTRUCTION ENTRANCE SHALL BE REMOVED ONCE THE COMPACTED ROADWAY BASE IN IN PLACE. STONE AND SEDIMENT FROM THE CONSTRUCTION ENTRANCE SHALL BE REDISTRIBUTED TO AN AREA UNDERGOING GRADING OR REMOVED AND RELOCATED OFFSITE.
3. MISCELLANEOUS: ONCE ALL THE TRAPPED SEDIMENTS HAVE BEEN REMOVED FROM THE TEMPORARY SEDIMENTATION DEVICES THE DISTURBED AREAS MUST BE REGRADED IN AN AESTHETIC MANNER TO CONFORM TO THE SURROUNDING TOPOGRAPHY. ONCE GRADED THESE DISTURBED AREAS MUST BE LOAMED (IF NECESSARY), FERTILIZED, SEEDED AND MULCHED IN ACCORDANCE WITH THE RATES PREVIOUSLY STATED.

THE ABOVE EROSION CONTROLS MUST BE REMOVED WITHIN 30 DAYS OF FINAL STABILIZATION OF THE SITE. CONFORMANCE WITH THIS PLAN AND FOLLOWING THESE PRACTICES WILL RESULT IN A PROJECT THAT COMPLIES WITH THE STATE REGULATIONS AND THE STANDARDS OF THE NATURAL RESOURCES PROTECTION ACT, AND WILL PROTECT WATER QUALITY IN AREAS DOWNSTREAM ROM THE PROJECT.

MAINE CONSTRUCTION GENERAL PERMIT REQUIRED

SUBMISSION OF A MAINE CONSTRUCTION GENERAL PERMIT (MCGP) IS REQUIRED PRIOR TO COMMENCEMENT OF ANY EXCAVATION ACTIVITIES.

INSPECTION AND MAINTENANCE (APPENDIX B)

1. INSPECTION AND MAINTENANCE REQUIREMENTS: INSPECT DISTURBED AND IMPERVIOUS AREAS, EROSION AND STORMWATER CONTROL MEASURES, AREAS USED FOR STORAGE THAT ARE EXPOSED TO PRECIPITATION, AND LOCATIONS WHERE VEHICLES ENTER OR EXIT THE SITE. INSPECT THESE AREAS AT LEAST ONCE A WEEK AS WELL AS BEFORE AND AFTER A SIGNIFICANT STORM EVENT (0.5 INCHES OF RAINFALL IN A 24-HOUR PERIOD) AND PRIOR TO COMPLETION OF PERMANENT STABILIZATION MEASURES. A PERSON WITH KNOWLEDGE OF EROSION AND STORMWATER CONTROL, INCLUDING THE STANDARDS IN THE MCGP AND ANY DEPARTMENTAL COMPANION DOCUMENT TO THE MCGP, MUST CONDUCT THE INSPECTION. THIS PERSON MUST BE IDENTIFIED IN THE INSPECTION LOG. IF BEST MANAGEMENT PRACTICES (BMPS) NEED TO BE MODIFIED OR IF ADDITIONAL BMPS ARE NECESSARY, IMPLEMENTATION MUST BE STARTED BY THE END OF THE NEXT WORKIN DAY AND COMPLETED WITHIN 7 CALENDAR DAYS AND PRIOR TO ANY STORM EVENT (RAINFALL). ALL MEASURES MUST BE MAINTAINED IN EFFECTIVE OPERATING CONDITION UNTIL AREAS AREA PERMANENTLY STABILIZED. DOCUMENTATION OF CORRECTION ACTIONS SHALL BE MAINTAINED WITH THE INSPECTION FORMS.
2. INSPECTION LOG (REPORT): A LOG (REPORT) MUST BE KEPT SUMMARIZING THE SCOPE OF THE INSPECTION, NAME(S) AND QUALIFICATIONS OF THE PERSONNEL MAKING THE INSPECTION, THE DATE(S) OF THE INSPECTION, AND MAJOR OBSERVATIONS RELATING TO OPERATION OF EROSION AND SEDIMENTATION CONTROLS AND POLLUTION PREVENTION MEASURES. MAJOR OBSERVATIONS MUST INCLUDE BMPS THAT NEED MAINTENANCE, BMPS THAT FAILED TO OPERATE AS DESIGNED OR PROVED INADEQUATE FOR A PARTICULAR LOCATION, AND LOCATIONS(S) WHERE ADDITIONAL BMPS ARE NEEDED. FOR EACH BMP REQUIRING MAINTENANCE, BMP NEEDING REPLACEMENT, AND LOCATION NEEDING ADDITIONAL BMPS, NOTE IN THE INSPECTION LOG THE CORRECT ACTION TAKEN AND WHEN IT WAS TAKEN. THE LOG MUST BE MADE ACCESSIBLE TO THE DEPARTMENT STAFF AND A COPY MUST BE PROVIDED UPON REQUEST. THE PERMITTEE SHALL RETAIN A COPY OF THE LOG FOR A PERIOD OF AT LEAST THREE YEARS FROM THE COMPLETION OF THE PERMANENT STABILIZATION.

HOUSEKEEPING (APPENDIX C)

1. SPILL PREVENTION: CONTROLS MUST BE USED TO PREVENT POLLUTANTS FROM CONSTRUCTION AND WASTE MATERIALS STORED ON SITE TO ENTER STORMWATER, WHICH INCLUDES STORAGE PRACTICES TO MINIMIZE EXPOSURE OF THE MATERIALS TO STORMWATER. THE SITE CONTRACTOR OR OPERATOR MUST DEVELOP, AND IMPLEMENT AS NECESSARY, APPROPRIATE SPILL PREVENTION, CONTAINMENT, AND RESPONSE PLANNING MEASURES.

NOTE: ANY SPILL OR RELEASE OF TOXIC OR HAZARDOUS SUBSTANCES MUST BE REPORTED TO THE DEPARTMENT. FOR OIL SPILLS, CALL 1-800-482-0777 WHICH IS AVAILABLE 24 HOURS A DAY. FOR SPILLS OF TOXIC OR HAZARDOUS MATERIAL, CALL 1-800-452-4664 WHICH IS AVAILABLE 24 HOURS A DAY. FOR MORE INFORMATION, VISIT THE DEPARTMENT'S WEBSITE AT: HTTP://WWW.MAINE.GOV/DEP/SPILLS/EMERGSPILLRESP/

2. GROUNDWATER PROTECTION: DURING CONSTRUCTION, LIQUID PETROLEUM PRODUCTS AND OTHER HAZARDOUS MATERIALS WITH THE POTENTIAL TO CONTAMINATE GROUNDWATER MAY NOT BE STORED OR HANDLED IN AREAS OF THE SITE DRAINING TO AN INFILTRATION AREA. AN "INFILTRATION AREA" IS ANY AREA OF THE SITE THAT BY DESIGN OR AS A RESULT OF SOILS, TOPOGRAPHY AND OTHER RELEVANT FACTORS ACCUMULATES RUNOFF THAT INFILTRATES INTO THE SOIL. DIKES, BERMS, SUMPS, AND OTHER FORMS OF SECONDARY CONTAINMENT THAT PREVENT DISCHARGE TO GROUNDWATER MAY BE USED TO ISOLATE PORTIONS OF THE SITE FOR THE PURPOSES OF STORAGE AND HANDLING OF THESE MATERIALS. ANY PROJECT PROPOSING INFILTRATION OF STORMWATER MUST PROVIDE ADEQUATE PRE-TREATMENT OF STORMWATER PRIOR TO DISCHARGE OF STORMWATER TO THE INFILTRATION AREA, OR PROVIDE FOR TREATMENT WITHIN THE INFILTRATION AREA, IN ORDER TO PREVENT THE ACCUMULATION OF FINES, REDUCTION IN INFILTRATION RATE, AND CONSEQUENT FLOODING AND DESTABILIZATION.

NOTE: LACK OF APPROPRIATE POLLUTANT REMOVAL BEST MANAGEMENT PRACTICES (BMPS) MAY RESULT IN VIOLATIONS OF THE GROUNDWATER QUALITY STANDARD ESTABLISHED BY 38 M.R.S.A. §465-C(1).

3. FUGITIVE SEDIMENT AND DUST: ACTIONS MUST BE TAKEN TO ENSURE THAT ACTIVITIES DO NOT RESULT IN NOTICEABLE EROSION OF SOILS OR FUGITIVE DUST EMISSIONS DURING OR AFTER CONSTRUCTION. OIL MAY NOT BE USED FOR DUST CONTROL, BUT OTHER WATER ADDITIVES MAY BE CONSIDERED AS NEEDED. A STABILIZED CONSTRUCTION ENTRANCE (SCE) SHOULD BE INCLUDED TO MINIMIZE TRACKING OF MUD AND SEDIMENT. IF OFF-SITE TRACKING OCCURS, PUBLIC ROADS SHOULD BE SWEPT IMMEDIATELY AND NO LESS THAN ONCE A WEEK AND PRIOR TO SIGNIFICANT STORM EVENTS. OPERATIONS DURING DRY MONTHS, THAT EXPERIENCE FUGITIVE DUST PROBLEMS, SHOULD WET DOWN UNPAVED ACCESS ROADS ONCE A WEEK OR MORE FREQUENTLY AS NEEDED WITH A WATER ADDITIVE TO SUPPRESS FUGITIVE SEDIMENT AND DUST.

NOTE: DEWATERING A STREAM WITHOUT A PERMIT FROM THE DEPARTMENT MAY VIOLATE STATE WATER QUALITY STANDARDS AND THE NATURAL RESOURCES PROTECTION ACT.

4. DEBRIS AND OTHER MATERIALS: MINIMIZE THE EXPOSURE OF CONSTRUCTION DEBRIS, BUILDING AND LANDSCAPING MATERIALS, TRASH, FERTILIZERS, PESTICIDES, HERBICIDES, DETERGENTS, SANITARY WASTE AND OTHER MATERIALS TO PRECIPITATION AND STORMWATER RUNOFF. THESE MATERIALS MUST BE PREVENTED FROM BECOMING A POLLUTANT SOURCE.

NOTE: TO PREVENT THESE MATERIALS FROM BECOMING A SOURCE OF POLLUTANTS, CONSTRUCTION AND POST-CONSTRUCTION ACTIVITIES RELATED TO A PROJECT MAY BE REQUIRED TO COMPLY WITH APPLICABLE PROVISION OF RULES RELATED TO SOLID, UNIVERSAL, AND HAZARDOUS WASTE, INCLUDING, BUT NOT LIMITED TO, THE MAINE SOLID WASTE AND HAZARDOUS WASTE MANAGEMENT RULES; MAINE HAZARDOUS WASTE MANAGEMENT RULES; MAINE OIL CONVEYANCE AND STORAGE RULES; AND MAINE PESTICIDE REQUIREMENTS.

5. EXCAVATION DEWATERING: EXCAVATION DEWATERING IS THE REMOVAL OF WATER FROM TRENCHES, FOUNDATIONS, COFFER DAMS, PONDS, AND OTHER AREAS WITHIN THE CONSTRUCTION AREA THAT RETAIN WATER AFTER EXCAVATION. IN MOST CASES THE COLLECTED WATER IS HEAVILY SILTED AND HINDERS CORRECT AND SAFE CONSTRUCTION PRACTICES. THE COLLECTED WATER REMOVED FROM THE PONDED AREA, EITHER THROUGH GRAVITY OR PUMPING, MUST BE SPREAD THROUGH NATURAL WOODED BUFFERS OR REMOVED TO AREAS THAT ARE SPECIFICALLY DESIGNED TO COLLECT THE MAXIMUM AMOUNT OF SEDIMENT POSSIBLE, LIKE A COFFERDAM SEDIMENTATION BASIN. AVOID ALLOWING THE WATER TO FLOW OVER DISTURBED AREAS OF THE SITE. EQUIVALENT MEASURES MAY BE TAKEN IF APPROVED BY THE DEPARTMENT.

NOTE: DEWATERING CONTROLS ARE DISCUSSED IN THE "MAINE EROSION AND SEDIMENT CONTROL BMPS, MAINE DEPARTMENT OF ENVIRONMENTAL PROTECTION."

6. AUTHORIZED NON-STORMWATER DISCHARGES: IDENTIFY AND PREVENT CONTAMINATION BY NON-STORMWATER DISCHARGES. WHERE ALLOWED NON-STORMWATER DISCHARGES EXIST, THEY MUST BE IDENTIFIED AND STEPS SHOULD BE TAKEN TO ENSURE THE IMPLEMENTATION OF APPROPRIATE POLLUTION PREVENTION MEASURES FOR THE NON-STORMWATER COMPONENT(S) OF THE DISCHARGE. AUTHORIZED NON-STORMWATER DISCHARGES ARE:.
   - DISCHARGES FROM FIREFIGHTING ACTIVITY;
   - FIRE HYDRANT FLUSHINGS;
   - VEHICLE WASHWATER IF DETERGENTS ARE NOT USED AND WASHING IS LIMITED TO THE EXTERIOR OF VEHICLES (ENGINE, UNDERCARRIAGE, AND TRANSMISSION WASHING IS PROHIBITED);
   - DUST CONTROL RUNOFF IN ACCORDANCE WITH PERMIT CONDITIONS AND APPENDIX (C)(3);
   - ROUTINE EXTERNAL BUILDING WASHDOWN, NOT INCLUDING SURFACE PAINT REMOVAL, THAT DOES NOT INVOLVE DETERGENTS;
   - PAVEMENT WASHWATER (WHERE SPILLS/LEAKS OF TOXIC OR HAZARDOUS MATERIALS HAVE NOT OCCURRED, UNLESS ALL SPILLED MATERIAL HAD BEEN REMOVED) IF DETERGENTS ARE NOT USED;
   - UNCONTAMINATED AIR CONDITIONING OR COMPRESSOR CONDENSATE;
   - UNCONTAMINATED GROUNDWATER OR SPRING WATER;
   - FOUNDATION OR FOOTER DRAIN-WATER WHERE FLOWS ARE NOT CONTAMINATED;
   - UNCONTAMINATED EXCAVATION DEWATERING (SEE REQUIREMENTS IN APPENDIX C(5));
   - POTABLE WATER SOURCES INCLUDING WATERLINE FLUSHINGS; AND
   - LANDSCAPE IRRIGATION
7. UNAUTHORIZED NON-STORMWATER DISCHARGES: THE DEPARTMENT'S APPROVAL UNDER THIS CHAPTER DOES NOT AUTHORIZE A DISCHARGE THAT IS MIXED WITH A SOURCE OF NON-STORMWATER, OTHER THAN THOSE DISCHARGES IN COMPLIANCE WITH APPENDIX C (6). SPECIFICALLY, THE DEPARTMENT'S APPROVAL DOES NOT AUTHORIZE DISCHARGES OF THE FOLLOWING:
   - WASTEWATER FROM THE WASHOUT OR CLEANOUT OF CONCRETE, STUCCO, PAINT, FORM RELEASE OILS, CURING COMPOUNDS OR OTHER CONSTRUCTION MATERIALS;
   - FUELS, OILS OR OTHER POLLUTANTS USED IN VEHICLE AND EQUIPMENT OPERATION AND MAINTENANCE;
   - SOAPS, SOLVENTS, OR DETERGENTS USED IN VEHICLE AND EQUIPMENT WASHING; AND
   - TOXIC OR HAZARDOUS SUBSTANCES FROM A SPILL OR OTHER RELEASE.

ADDITIONAL REQUIREMENTS: ADDITIONAL REQUIREMENTS MAY BE APPLIED ON A SITE-SPECIFIC BASIS.

CONSTRUCTION OVERSITE

THE APPLICANT WILL RETAIN THE SERVICES OF A PROFESSIONAL ENGINEER TO INSPECT THE CONSTRUCTION AND STABILIZATION FOR ALL STORMWATER MANAGEMENT STRUCTURES. IF NECESSARY, THE INSPECTING ENGINEER WILL INTERPRET THE POND'S CONSTRUCTION PLAN FOR THE CONTRACTOR. ONCE ALL STORMWATER MANAGEMENT STRUCTURES ARE CONSTRUCTED AND STABILIZED, THE INSPECTING ENGINEER WILL NOTIFY THE DEPARTMENT IN WRITING WITHIN 30 DAY

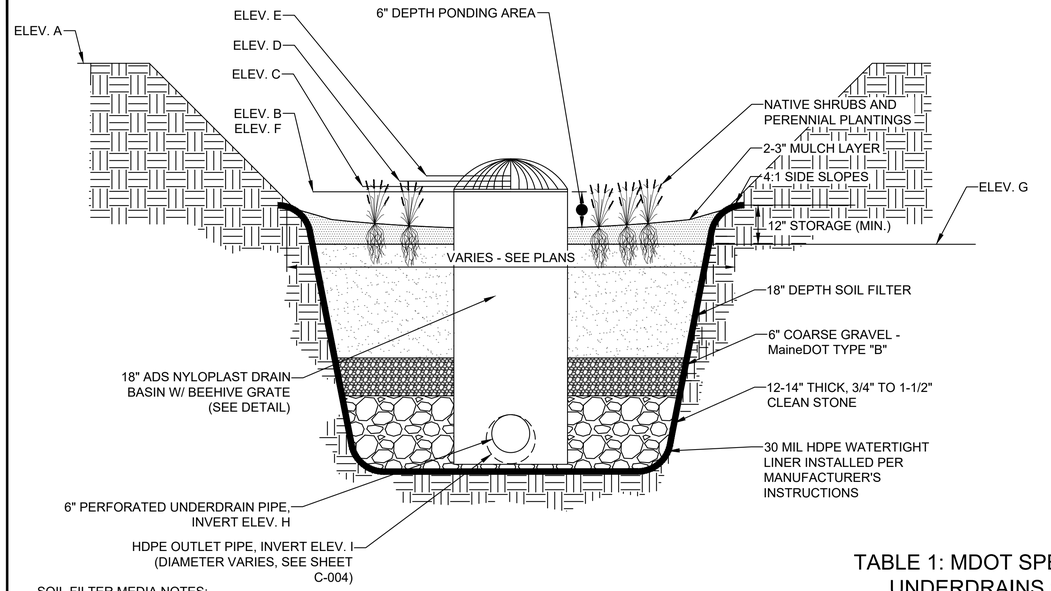

SOIL FILTER MEDIA NOTES:

SOIL FILTER MEDIA SHALL CONFORM TO MAINE DEP SOIL FILTER MEDIA OPTION 1, PER MAINE DEP STORMWATER BMP MANUAL CHAPTER 7.1. AS FOLLOWS:

1.1. SOIL FILTER MEDIA SHALL CONSIST OF A SILTY SAND SOIL OR SOIL MIXTURE COMBINED WITH A MATURE, MODERATELY FINE SHREDDED BARK OR WOOD FIBER MULCH.
1.2. THE RESULTING MIX SHALL CONTAIN NO LESS THAN 10% BY DRY WEIGHT ORGANIC MATERIAL.
1.3. THE RESULTING MIX SHALL CONTAIN 8% TO 12% PASSING THE NO. 200 SIEVE.
1.4. THE RESULTING MIX SHALL CONTAIN A MAXIMUM CLAY CONTENT OF 2%.

UNDERDRAIN OUTLET VALVE CALIBRATION NOTES:

AFTER THE COMPLETION OF INSTALLATION OF THE SOIL FILTER MEDIA, THE CONTRACTOR SHALL PERFORM THE FOLLOWING PROCEDURE TO CALIBRATE THE UNDERDRAIN OUTLET VALVE TO ACHIEVE THE 0.75"/HOUR DESIGN FLOW RATE.

1. BEGIN WITH VALVE HALF-OPEN.
2. CAREFULLY FLOOD THE BASIN UNTIL THERE IS 18" OF WATER STORED ABOVE THE SOIL FILTER MEDIA (UP TO THE HEIGHT OF OUTLET STRUCTURE RIM) WITHOUT CAUSING EROSION OF THE SOIL FILTER MEDIA.
3. RECORD THE TIME IT TAKES FOR THE 18" OF WATER TO DRAIN TO THE TOP OF THE SOIL FILTER MEDIA. THE TARGET DRAINDOWN TIME IS 24 HOURS.
4. IF THE 18" OF WATER DRAINS IN LESS THAN 24 HOURS, CLOSE THE VALVE SLIGHTLY AND REPEAT STEPS 2 & 3 ABOVE.
5. IF THE 18" OF WATER DRAINS IN MORE THAN 24 HOURS, OPEN THE VALVE SLIGHTLY AND REPEAT STEPS 2 & 3 ABOVE.
6. REPEAT THIS PROCESS UNTIL THE 18" OF WATER DRAINS IN 24 HOURS.

TABLE 1: MDOT SPECIFICATIONS FOR UNDERDRAINS (MDOT #703.22)

SIEVE SIZE	% BY WEIGHT
UNDERDRAIN TYPE B	
0'-1"	90-100
0'-0 1/2"	75-100
#4	50-100
#20	15-80
#50	0-15
#200	0-5

BIORETENTION FILTER CELL SCHEDULE

BIORETENTION FILTER CELL ID	EMBKMT. ELEV. [A]	WATER QUALITY STORM ELEV. [B]	2-YR STORM ELEV. [C]	10-YR STORM ELEV. [D]	25-YR STORM ELEV. [E]	TOP OF OUTLET STRUCT ELEV. [F]	BOTTOM OF STORAGE ELV. [G]	INTERIOR UNDERDRAIN INVERT (START) [H]	UNDERDRAIN OUTLET INVERT [I]	FILTER AREA (SQ. FT.)
SF-A	24.50	23.50	23.62	23.67	23.71	23.50	23.00	19.25	18.75	580
SF-B	18.50	18.00	18.11	18.16	18.19	18.00	17.50	14.25	13.75	890

2 BIORETENTION FILTER CELL

NO SCALE

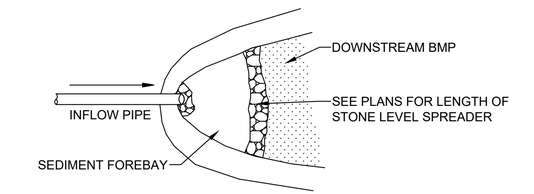

PLAN VIEW

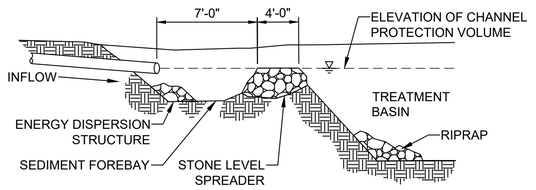

CROSS-SECTION

NOTES:
1. STONE SHALL BE AASHTO #3 STONE, UNIFORMLY GRADED, CLEAN.

3 LEVEL SPREADER DESIGN

NO SCALE

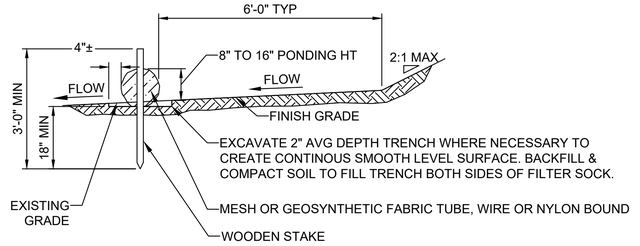

SECTION

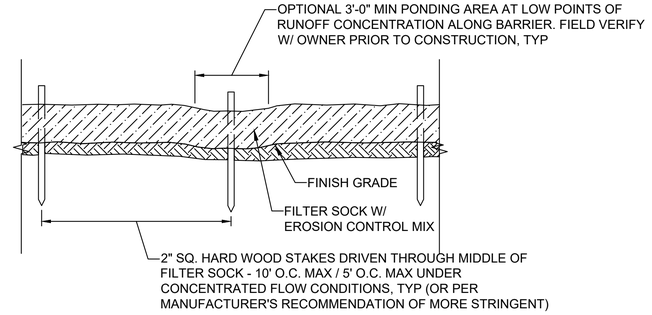

ELEVATION

NOTES:
1. FILTER SOCKS SHALL BE INSTALLED IN CONTINUOUS SEGMENT AND IN FULL CONTACT WITH THE GROUND ON A SMOOTH LEVEL SURFACE.
2. FOLLOW MANUFACTURER'S REQUIREMENTS FOR INSTALLATION, MAINTENANCE AND REMOVAL OF FILTER SOCK MATERIALS.
3. AREAS DISTURBED BY EROSION BARRIERS SHALL BE STABILIZED AFTER REMOVAL.

1 SEDIMENT BARRIER - FILTER SOCK

NO SCALE

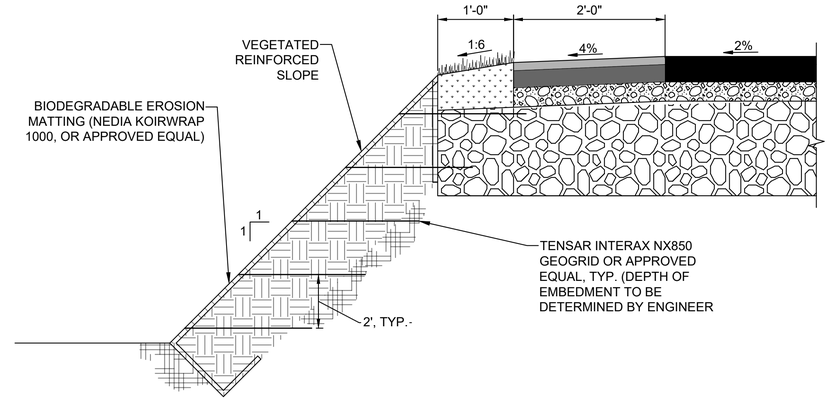

4 1:1 VEGETATED REINFORCED SLOPE

NO SCALE

FOR PERMIT

Attention: 0 1" — If this scale bar does not measure 1" then drawing is not original scale.

STATE OF MAINE — BRIAN M. MCDEVITT — PE18260 — LICENSED PROFESSIONAL ENGINEER

6/9/2025

Designed:	DJB
Drawn:	JAM
Checked:	BJB
Approved:	BMM
P.E. No:	13033
GEI Project	2203703

GEI Consultants
GEI CONSULTANTS, INC.
5 MILK STREET
PORTLAND, ME 04101
(207)797-8901

UNE
UNIVERSITY OF NEW ENGLAND
11 HILLS BEACH RD.
BIDDEFORD, MAINE

UNIVERSITY OF NEW ENGLAND MARINE SCIENCE CENTER PIER
11 HILLS BEACH ROAD
BIDDEFORD, YORK COUNTY, MAINE

NO	DATE	ISSUE/REVISION	APP
8	6/5/2025	ADDRESS PB COMMENTS	DJB
7	4/16/2025	BIDDEFORD PERMIT APP.	DJB
6	9/17/2024	REVISED PERMIT SET	DJB
5	6/27/2024	REVISED PERMIT SET	DJB
4	9/14/2023	DEP PERMIT SET	DJB
3	6/28/2023	75% DESIGN SUBMISSION	DJB
2	2/15/2023	30% DESIGN SUBMISSION	DJB
1	12/9/2022	15% DESIGN SUB REV	DJB
0	11/11/2022	15% DESIGN SUBMISSION	DJB

SHEET NAME: **EROSION CONTROL DETAILS I**

SHEET NO.: **C-013**

DJCASTELNUOVO, VINNIE \\gelconsultants.com\data\Data_Storage\Working\UNIVERSITY OF NEW ENGLAND\2203703 UNE Marine Science Center Pier\00_CAD\Design\Sheets\2203703-C-DETAILS.dwg - 6/9/2025

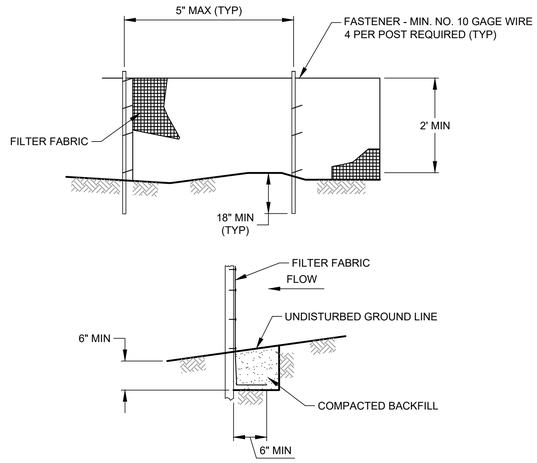

NOTES:
1. TEMPORARY SEDIMENT FENCE SHALL BE INSTALLED PRIOR TO ANY GRADING WORK IN THE AREA TO BE PROTECTED. THEY SHALL BE MAINTAINED THROUGHOUT THE CONSTRUCTION PERIOD AND REMOVED IN CONJUNCTION WITH THE FINAL GRADING AND SITE STABILIZATION.
2. FILTER FABRIC SHALL MEET THE REQUIREMENTS OF MATERIAL SPECIFICATION 592 GEOTEXTILE TABLE 1 OR 2, CLASS L WITH EQUIVALENT OPENING SIZE OF AT LEAST 30 FOR NONWOVEN AND 50 FOR WOVEN.
3. FENCE POSTS SHALL BE EITHER WOOD POST WITH A MINIMUM CROSS-SECTIONAL AREA OF 3 SQ. IN. OR A STANDARD STEEL POST.

5 SILT FENCE

NO SCALE

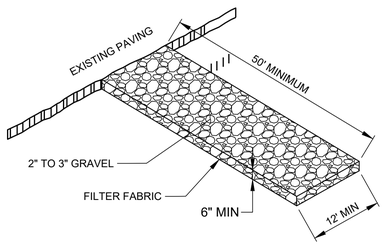

8 STABILIZED CONSTRUCTION ENTRANCE

NO SCALE

NOTES:
1. THE ENTRANCE/EXIT PAD SHOULD HAVE A LENGTH OF 50 FEET OR MORE AND A 12-FOOT MINIMUM WIDTH (OR AS APPROPRIATE TO CONTAIN THE WHEEL BASE OF CONSTRUCTION VEHICLES PLUS 3 FEET ON EITHER SIDE).
2. THE PAD SHOULD BE 6 INCHES OR MORE THICK WITH ANGULAR AGGREGATE (2-3 INCH DIAMETER). APPROPRIATE RECLAIMED CONCRETE MATERIAL MAY BE USED.
3. THE AGGREGATE SHOULD BE PLACED OVER A GEOTEXTILE FILTER TO PREVENT THE STONES FROM PUSHING INTO THE NATIVE SOIL.
4. AT THE BOTTOM OF SLOPES, A DIVERSION RIDGE SHOULD BE PROVIDED TO INTERCEPT RUNOFF.
5. BERMS MAY BE NECESSARY TO DIVERT WATER AROUND ANY EXPOSED SOIL, AND RUNOFF SHOULD BE DIRECTED TO A SEDIMENT TRAP.
6. THE WHEELS OF CONSTRUCTION EQUIPMENT MAY BE WASHED PRIOR TO EXITING THE SITE. WASHING SHOULD BE PERFORMED IN AN AREA THAT DRAINS TO A SEDIMENT TRAP OR BASIN.
7. THE PAD SHOULD BE INSPECTED WEEKLY, AND BEFORE AND AFTER EACH STORM. THE PAD MAY HAVE TO BE REPLACED IF THE VOIDS BECOME FILLED WITH SEDIMENT. STREET SWEEPING MAY BE NECESSARY

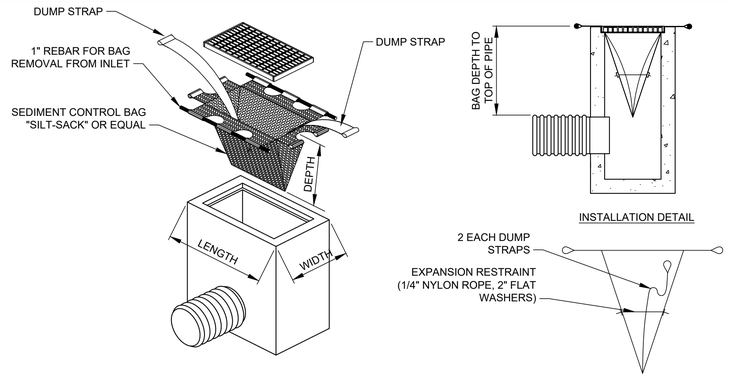

CB STYLE	LENGTH	WIDTH	DEPTH
TYPE 1 CB	2'-0"	1'-8"	VARIES
TYPCE 1 CCI	2'-5 1/2"	2'-0"	VARIES
USA G2	2'-8 1/2"	2'-3 1/2"	VARIES

NOTES:

1. THE DIMENSION CHART ABOVE IS FOR STANDARD CATCH BASINS AND INLETS ONLY. THE CONTRACTOR IS RESPONSIBLE FOR PROVIDING THE CORRECT SIZE DEVICE FOR EACH INLET.
2. FOR NON-STANDARD CATCH BASINS AND INLETS, THE CONTRACTOR SHALL MEASURE DIMENSIONS IN THE FIELD AND ORDER THE APPROPRIATE SIZE(S).
3. THE INLET SEDIMENT CONTROL DEVICE SHALL BE OF HIGH FLOW DESIGN (200 GAL/MIN/FT), AS PER THE MANUFACTURER'S SPECS.
4. THE SEDIMENT CONTROL DEVICE SHALL BE INSPECTED DAILY BY THE CONTRACTOR AND MAINTAINED A MINIMUM ONCE PER MONTH OR WITHIN THE 48 HOURS FOLLOWING A STORM EVENT. FILTER SHALL BE CLEANED IN A MANNER WHICH ENSURES THAT ALL SEDIMENT REMAINS ON SITE.
5. SUBSTITUTION OF A SHEET OF FILTER FABRIC PLACED OVER THE OPENING OF THE INLET IS NOT APPROVED.
6. RECESSED CURB INLET CATCH BASINS MUST BE BLOCKED WHEN USING FILTER FABRIC INLET SACKS, SIZE OF FILTER INLET SACK TO BE DETERMINED BY MANUFACTURER.
7. THE FILTER SHALL BE REPLACED OR CLEANED WHEN THE BAG BECOMES HALF FULL.
8. SEE INLET PROTECTION NOTES STD. DETAIL E3.

6 SILT SACK INLET PROTECTION

SCALE: N.T.S.

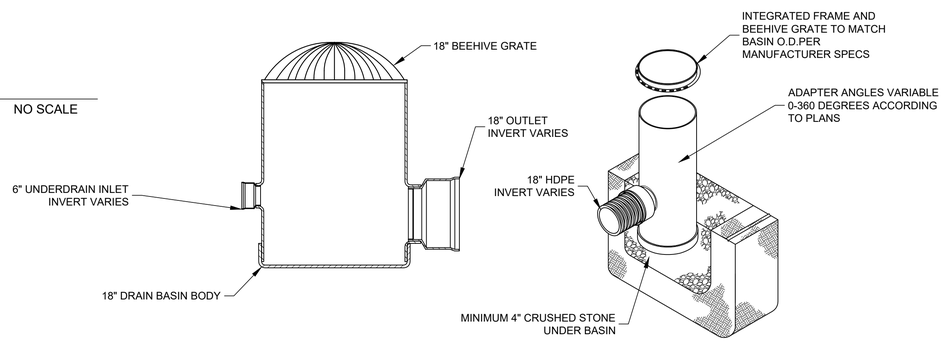

9 ADS NYLOPLAST 18"DRAIN BASIN W/BEEHIVE GRATE

NO SCALE

NOTES:
1. THE SOIL SURFACE SHOULD BE FINELY GRADED AND SMOOTH FOR THE BLANKET TO HAVE DIRECT CONTACT WITH THE SOIL AND TO PREVENT UNDERMINING. EROSION CONTROL BLANKETS PERFORM BEST ON LOAMY SOILS AND SHOULD NOT BE USED ON ROCKY SITES OR SHALLOW SOILS.
2. SEED SHOULD BE SOWN BEFORE INSTALLING THE EROSION CONTROL BLANKET.
3. ALWAYS UNROLL THE BLANKET DOWNHILL WITHOUT STRETCHING AND ANCHOR THE UPSLOPE EDGE IN A 12 INCH DEEP TRENCH THAT IS BACKFILLED AND TAMPED.
4. OVERLAP SHINGLE STYLE A MINIMUM OF 12 INCHES AT THE TOP OF EACH ROW AND 4 INCHES AT THE EDGES OF PARALLEL ROWS. ANCHOR ALONG THE OVERLAP WITH A MAXIMUM SPACING OF 3 FEET OR AS REQUIRED BY THE MANUFACTURER.

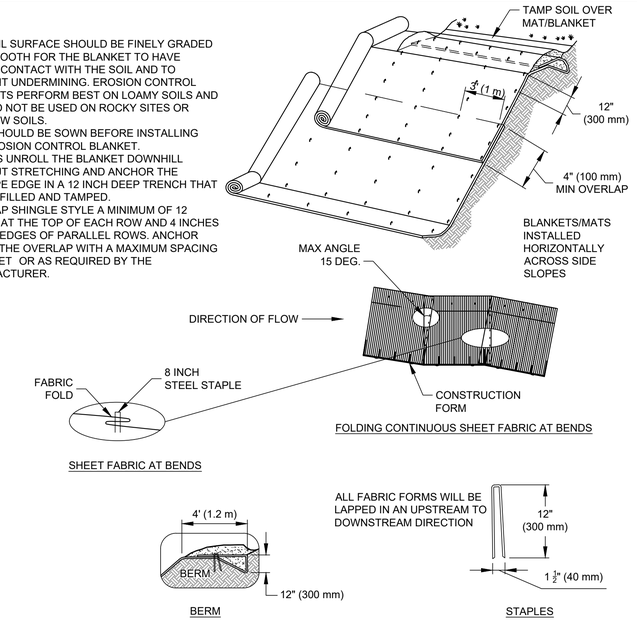

7 BIODEGRADABLE STABILIZATION MATTING

NO SCALE

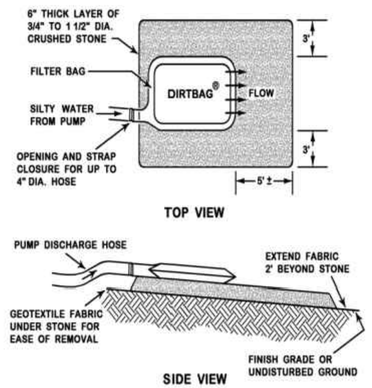

NOTES:
1. INSTALL THE FILTER BAG PRIOR TO INITIATING ANY ACTIVITIES WHICH WILL REQUIRE DEWATERING.
2. THE TYPE OF FABRIC SHOULD BE BASED ON THE SIZE OF SOIL PARTICLES TO BE TRAPPED (I.E. A WOVEN MATERIAL FOR COARSE PARTICLES AND A NONWOVEN MATERIAL FOR FINER PARTICLES).
3. A FILTER BAG SHOULD BE LOCATED IN AN AREA MOSTLY LEVEL (WITH LESS THAN 5% SLOPE). A PAD OF CRUSHED GRAVEL MAY BE PROVIDED.
4. AVOID DISCHARGING TO AN AREA THAT IS BARE OF VEGETATION OR NEWLY VEGETATED. ANY SIGN OF EROSION OR CHANNELIZATION FROM THE DISCHARGED WATER REQUIRES IMMEDIATELY CORRECTION.
5. FILTER BAGS HAVE A FINITE CAPACITY FOR SEDIMENT COLLECTION AND MAY BE PRONE TO PLUGGING. AVOID OVER-PRESSURIZING THE BAG OR IT MAY BURST.

10 GEOTEXTILE FILTER BAG

NO SCALE

FOR PERMIT

Attention:
0 1"
If this scale bar does not measure 1" then drawing is not original scale.

STATE OF MAINE BRIAN M. MCDEVITT PE18260 LICENSED PROFESSIONAL ENGINEER
6/9/2025

Designed:	DJB
Drawn:	JAM
Checked:	BJB
Approved:	BMM
P.E. No:	13033
GEI Project	2203703

GEI Consultants
GEI CONSULTANTS, INC.
5 MILK STREET
PORTLAND, ME 04101
(207)797-8901

UNIVERSITY OF NEW ENGLAND
11 HILLS BEACH RD.
BIDDEFORD, MAINE

UNIVERSITY OF NEW ENGLAND MARINE SCIENCE CENTER PIER
11 HILLS BEACH ROAD
BIDDEFORD, YORK COUNTY, MAINE

NO	DATE	ISSUE/REVISION	APP
8	6/5/2025	ADDRESS PB COMMENTS	DJB
7	4/16/2025	BIDDEFORD PERMIT APP.	DJB
6	9/17/2024	REVISED PERMIT SET	DJB
5	6/27/2024	REVISED PERMIT SET	DJB
4	9/14/2023	DEP PERMIT SET	DJB
3	6/28/2023	75% DESIGN SUBMISSION	DJB
2	2/15/2023	30% DESIGN SUBMISSION	DJB
1	12/9/2022	15% DESIGN SUB REV	DJB
0	11/11/2022	15% DESIGN SUBMISSION	DJB

SHEET NAME: **EROSION CONTROL DETAILS II**

SHEET NO.: **C-014**

DICASTELNUOVO, VINNIE \\geiconsultants.com\data\Data_Storage\Working\UNIVERSITY OF NEW ENGLAND\2203703 UNE Marine Science Center Pier\00_CAD\Design\Sheets\2203703-C-DETAILS.dwg - 6/9/2025

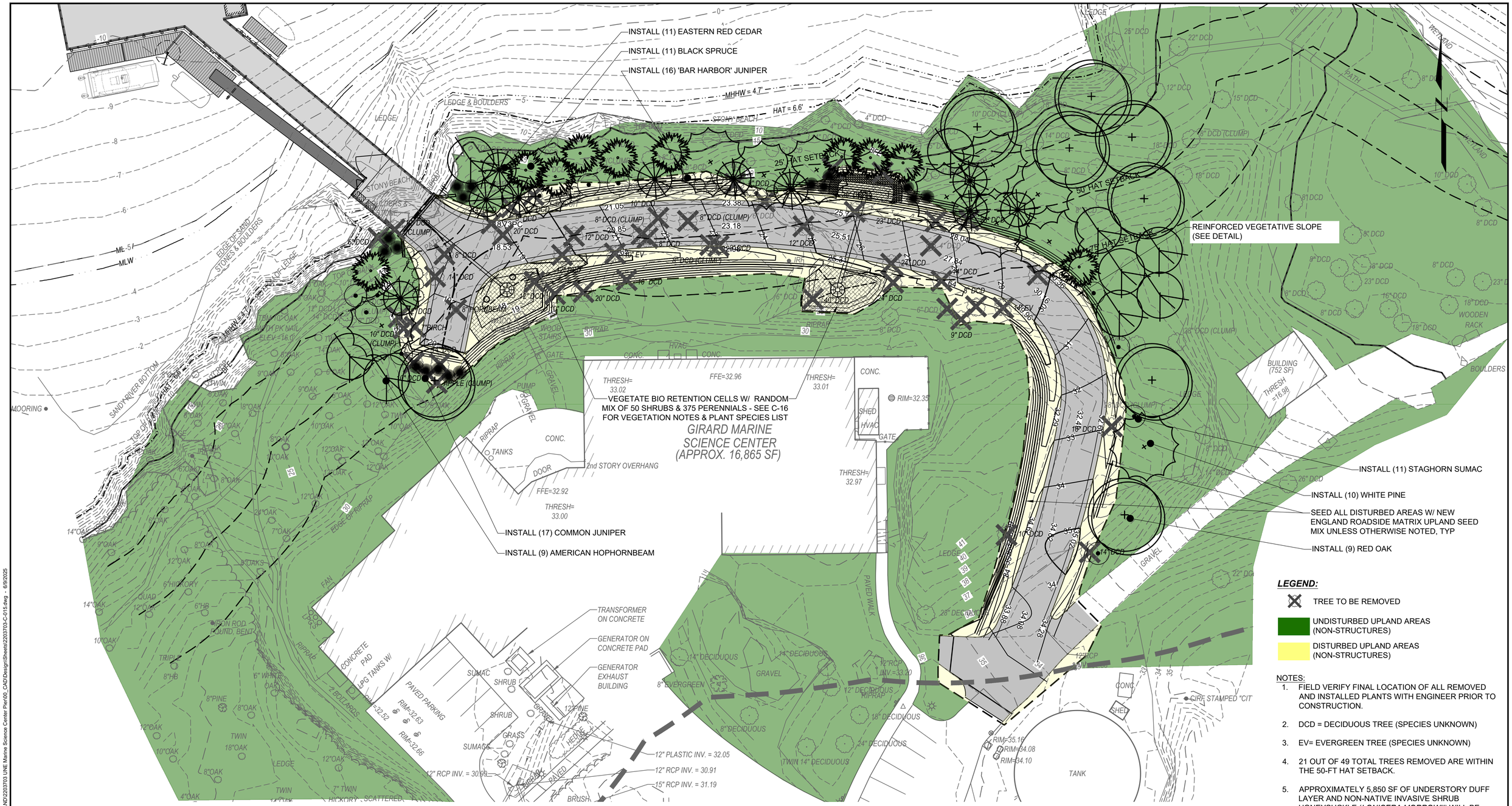

LEGEND:

- TREE TO BE REMOVED
- UNDISTURBED UPLAND AREAS (NON-STRUCTURES)
- DISTURBED UPLAND AREAS (NON-STRUCTURES)

NOTES:

1. FIELD VERIFY FINAL LOCATION OF ALL REMOVED AND INSTALLED PLANTS WITH ENGINEER PRIOR TO CONSTRUCTION.
2. DCD = DECIDUOUS TREE (SPECIES UNKNOWN)
3. EV= EVERGREEN TREE (SPECIES UNKNOWN)
4. 21 OUT OF 49 TOTAL TREES REMOVED ARE WITHIN THE 50-FT HAT SETBACK.
5. APPROXIMATELY 5,850 SF OF UNDERSTORY DUFF LAYER AND NON-NATIVE INVASIVE SHRUB HONEYSUCKLE (*LONICERA MORROWII*) WILL BE REMOVED WITHIN THE 50-FT HAT SETBACK.

PLAN
SCALE: 1" = 20'

FOR PERMIT

0 20 40
SCALE, FEET

Attention:
0 1"
If this scale bar does not measure 1" then drawing is not original scale.

STATE OF MAINE
BRIAN M. MCDEVITT
PE18260
LICENSED
PROFESSIONAL ENGINEER
6/9/2025

Designed:	DJB
Drawn:	JAM
Checked:	BJB
Approved:	BMM
P.E. No:	13033
GEI Project	2203703

GEI Consultants
GEI CONSULTANTS, INC.
5 MILK STREET
PORTLAND, ME 04101
(207)797-8901

UNE
UNIVERSITY OF NEW ENGLAND
11 HILLS BEACH RD.
BIDDEFORD, MAINE

UNIVERSITY OF NEW ENGLAND MARINE SCIENCE CENTER PIER
11 HILLS BEACH ROAD
BIDDEFORD, YORK COUNTY, MAINE

NO	DATE	ISSUE/REVISION	APP
8	6/5/2025	ADDRESS PB COMMENTS	DJB
7	4/16/2025	BIDDEFORD PERMIT APP.	DJB
6	9/17/2024	REVISED PERMIT SET	DJB
5	6/27/2024	REVISED PERMIT SET	DJB
4	9/14/2023	DEP PERMIT SET	DJB
3	6/28/2023	75% DESIGN SUBMISSION	DJB
2	2/15/2023	30% DESIGN SUBMISSION	DJB
1	12/9/2022	15% DESIGN SUB REV	DJB
0	11/11/2022	15% DESIGN SUBMISSION	DJB

SHEET NAME
REVEGETATION PLAN

SHEET NO.
C-015

DICASTELNUOVO, VINNIE B:\Working\UNIVERSITY OF NEW ENGLAND\2203703 UNE Marine Science Center Pier\00_CAD\Design\Sheets\2203703-C-015.dwg - 6/9/2025

VEGETATION GENERAL NOTES:

1. VEGETATION MANAGEMENT (INSTALLATION AND MAINTENANCE) SHALL COMPLY WITH CITY OF BIDDEFORD SHORELAND ZONING ORDINANCE REQUIREMENTS.
   - 1.1. ALL REVEGETATION MUST OCCUR ALONG THE SAME SEGMENT OF SHORELINE AND IN AS CLOSE OF PROXIMITY AS PRACTICAL TO THE LOCATION WHERE THE VEGETATION WAS REMOVED.
   - 1.2. ALL VEGETATION REMOVED MUST BE REPLACED WITH NATIVE, NON-INVASIVE SPECIES.
   - 1.3. AT LEAST THREE DIFFERENT SPECIES OF TREES AND WOODY VEGETATION UNDER THREE FEET IN HEIGHT SHALL BE USED.
   - 1.4. NO MORE THAN ONE SPECIES OF TREES AND WOODY VEGETATION UNDER THREE FEET IN HEIGHT SHALL MAKE UP MORE THAN 50% OF THE TOTAL NUMBER OF TREES AND WOOD VEGETATION UNDER THREE FEET IN HEIGHT PLANTED.
   - 1.5. SURVIVAL OF ALL VEGETATION MUST BE MAINTAINED FOR A MINIMUM OF FIVE YEARS.
2. ALL REMOVED NON-NATIVE PLANT MATERIAL SHALL BE PROPERLY DISPOSED OF BY BURNING ON-SITE OR DISPOSAL AT A WASTE RECEIVING FACILITY.
3. AN UPDATED LIST OF NON-NATIVE INVASIVE VEGETATION IS MAINTAINED BY THE DEPARTMENT OF AGRICULTURE, CONSERVATION AND FORESTRY'S NATURAL AREAS PROGRAM:
4. HTTPS://WWW.MAINE.GOV/DACF/MNAP/FEATURES/INVASIVE_PLANTS/INVASIVES.HTM
5. PLANT SPECIES SUBSTITUTIONS SHALL BE APPROVED BY THE OWNER. CONTRACTOR SHALL REFERENCE THE FOLLOWING RESOURCES FOR COASTAL PLANT LIST GUIDELINES: CUMBERLAND COUNTY SOIL & WATER CONSERVATION DISTRICT - COASTAL PLANTING GUIDE; UNIVERSITY OF MAINE COOPERATE EXTENSION; AND/OR THE WILD SEED PROJECT.

VEGETATION INSTALLATION NOTES:

1. THE CONTRACTOR SHALL TAKE CARE NOT TO DAMAGE VEGETATION WITHIN THE CONSTRUCTION AREA UNLESS NOTED TO BE REMOVED, LIMBED OR PRUNED. THIS MAY REQUIRE HAND EXCAVATION WITHIN TREE DRIPLINES.
2. ALL PLANT MATERIAL SELECTIONS SHALL BE APPROVED BY THE OWNER PRIOR TO INSTALLATION.
3. ALL NEW PLANTING MATERIAL SHALL CONFORM TO THE MINIMUM GUIDELINES ESTABLISHED FOR NURSERY STOCK PUBLISHED BY THE AMERICAN ASSOCIATION OF NURSERYMEN, INC. IN ADDITION ALL NEW PLANT MATERIAL FOR THE PROJECT SHALL BE OF THE HIGHEST SPECIMEN QUALITY.
4. ALL NEW PLANTS SHALL BE BALLED AND BURLAPPED OR CONTAINER GROWN UNLESS OTHERWISE NOTED ON THE PLANT LIST.
5. CONTRACTOR SHALL SUPPLY ALL NEW PLANT MATERIAL IN QUANTITIES SUFFICIENT TO COMPLETE THE PLANTING SHOWN ON THE DRAWINGS.
6. NO TREES SHALL BE PLANTED BEFORE ACCEPTANCE OF ROUGH GRADING. TREES SHALL BEAR SAME RELATIONSHIP TO FINISH GRADE AS THEY BORE TO PREVIOUS GRADE.
7. STAKE LOCATION OF ALL PROPOSED PLANTING FOR APPROVAL BY THE OWNER PRIOR TO COMMENCEMENT OF PLANTING.
8. ALL EXISTING TREES TO REMAIN SHALL BE PROPERLY PROTECTED, PRUNED AND FERTILIZED PER THE SPECIFICATIONS.
9. ALL LAWN AREAS DISTURBED BY CONSTRUCTION OPERATIONS INSIDE AND OUTSIDE THE LIMIT OF WORK SHALL BE LOAMED AND SEEDED AS SPECIFIED.
10. ALL PLANT BEDS ARE TO RECEIVE THREE INCHES (4") OF SHREDDED BARK MULCH AS SPECIFIED.
11. ANY PROPOSED SUBSTITUTIONS OF PLANT SPECIES SHALL BE MADE WITH PLANTS OF EQUIVALENT OVERALL FORM, HEIGHT, BRANCHING HABIT, FLOWER, LEAF, COLOR, FRUIT AND CULTURE ONLY AS APPROVED BY OWNER.
12. ALL AREAS TO BE SEEDED SHALL RECEIVE SOIL PREPARATION AS SPECIFIED PRIOR TO SEEDING, UNLESS OTHERWISE NOTED ON PLAN.
13. PREPARE ALL PLANT PITS WITH PLANTING SOIL TO A MINIMUM DEPTH MATCHING THE DEPTH OF ROOT BALLS.
14. NATIVE PLANT SPECIES REMOVED SHALL BE REPLANTED WITH IN-KIND SPECIES AND/OR THOSE PROVIDE IN THE PLANT LIST.

PLANT LIST

KEY	QTY	*SCIENTIFIC NAME* COMMON NAME	SIZE	SPACING	ROOTING	MATURE SIZE	NOTES
TREES							
CC	9	*CARPINUS CAROLINIANA* AMERICAN HORNBEAM	1" CAL	10' O.C.	B&B / CONT	25' HT / 25' W	REPLACE REMOVED TREES 1 FOR 1 AT LOCATIONS AS INDICATED ON THE REVEGETATION PLAN.
JV	10	*JUNIPERUS VIRGINIANA* EASTERN RED CEDAR	3'-4' HT	10' O.C.	B&B / CONT	35' HT / 15' W	
PM	10	*PICEA MARIANA* BLACK SPRUCE	5'-6' HT	10' O.C.	B&B / CONT	35' HT / 15' W	
PS	10	*PINUS STROBUS* WHITE PINE	6'-7' HT	15' O.C.	B&B / CONT	75' HT / 35' W	
QR	9	*QUERCUS RUBRA* RED OAK	1.5 - 2" CAL	25' O.C.	B&B / CONT	75' HT / 50' W	
SHRUBS							
JC	17	*JUNIPERUS COMMUNIS* COMMON JUNIPER	18"-24" HT	5' O.C.	CONT	10' HT / 10' W	PLANT SHRUBS AT LOCATIONS AS INDICATED ON THE REVEGETATION PLAN.
JH	16	*JUNIPERUS HORIZONTALS 'BAR HARBOR'* BAR HARBOR CREEPING JUNIPER	5-7 PPP	6' O.C.	CONT	1.5' HT / 10' W	
RT	11	*RHUS TYPHINA* STAGHORN SUMAC	18"-24" HT	10' O.C.	B&B / CONT	20' HT / 25' W	
BIORETENTION CELL PLANTING							
AS	75	*ASCLEPIAS SYRIACA* COMMON MILKWEED	5-7 PPP	18" O.C.	CONT	2' HT / 3' W	PROVIDE A RANDOM MIX OF EQUAL QUANTITIES OF EACH PERENNIAL AND SHRUB SPECIES THROUGHOUT BIO RETENTION CELLS. PLANT EACH SPECIES AS INDIVIDUALS OR IN GROUPINGS OF THREE.
IR	75	*IRIS VERSICOLOR* BLUE FLAG IRIS	5-7 PPP	18" O.C.	CONT	18"' HT / 2' W	
IV	25	*ILEX VERTICILLATA* WINTERBERRY	12"-18" HT	3' O.C.	CONT	8' HT / 8' W	
MP	25	*MYRICA PENSYLVANICA* NORTHERN BAYBERRY	12"-18" HT	3' O.C.	CONT	8' HT / 8' W	
PV	75	*PANICUM VIRGATUM* SWITCHGRASS	5-7 PPP	18" O.C.	CONT	3' HT / 2' W	
SN	75	*SYMPHYOTRICHUM NOVAE-ANGLIAE* NEW ENGLAND ASTER	5-7 PPP	18" O.C.	CONT	2' HT / 3' W	
SS	75	*SOLIDAGO SEMPERVIRENS* SEASIDE GOLDENROD	5-7 PPP	18" O.C.	CONT	2' HT / 3' W	
SEED MIX							
SOW NEW ENGLAND ROADSIDE MATRIX UPLAND SEED MIX ON ALL DISTURBED AREAS UNLESS OTHERWISE NOTED ON REVEGETATION PLAN.							

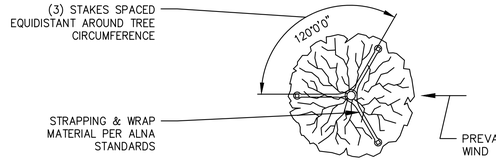

PLAN

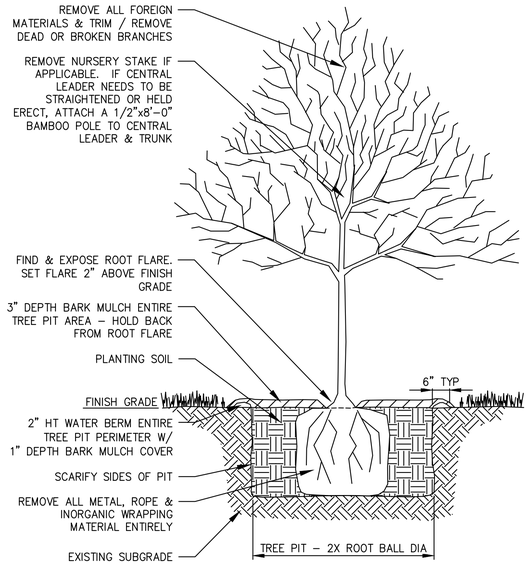

TREE INSTALLATION </= 10–FT

NOT TO SCALE

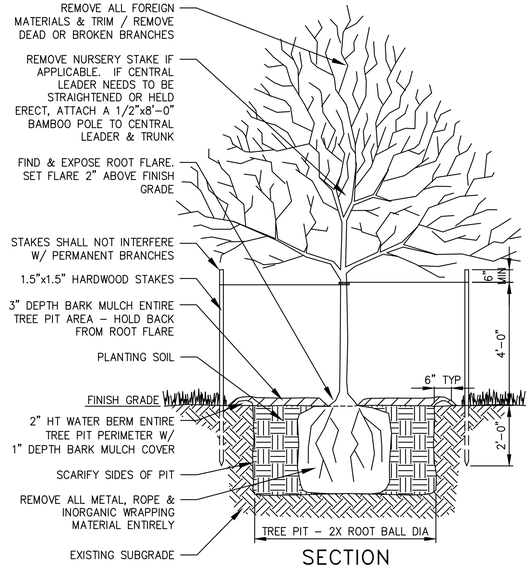

SECTION

TREE INSTALLATION > 10–FT

NOT TO SCALE

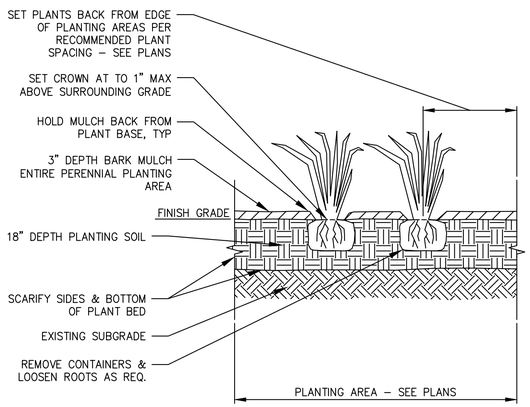

PERENNIAL INSTALLATION

NOT TO SCALE

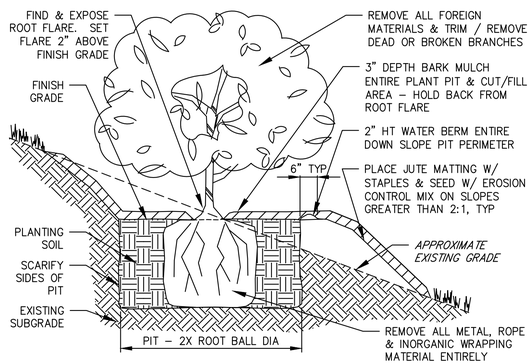

SHRUB INSTALLATION ON SLOPE

NOT TO SCALE

FOR PERMIT

ELEVATION	MLLW	NAVD88*
BFE	+19.0	+14.0
HAT	+11.6	+6.6
MHHW	+9.7	+4.7
MHW	+9.3	+4.3
MSL	+4.8	-0.2
MLW	+0.3	-4.7
MLLW	0.0	-5.0

*PROJECT DATUM

Attention:

0 1"

If this scale bar does not measure 1" then drawing is not original scale.

STATE OF MAINE BRIAN M. MCDEVITT PE18260 LICENSED PROFESSIONAL ENGINEER

6/9/2025

Designed:	DJB
Drawn:	JAM
Checked:	BJB
Approved:	BMM
P.E. No:	13033
GEI Project	2203703

GEI Consultants
GEI CONSULTANTS, INC.
5 MILK STREET
PORTLAND, ME 04101
(207)797-8901

UNIVERSITY OF NEW ENGLAND

11 HILLS BEACH RD.
BIDDEFORD, MAINE

UNIVERSITY OF NEW ENGLAND MARINE SCIENCE CENTER PIER

11 HILLS BEACH ROAD
BIDDEFORD, YORK COUNTY, MAINE

NO	DATE	ISSUE/REVISION	APP
8	6/5/2025	ADDRESS PB COMMENTS	DJB
7	4/16/2025	BIDDEFORD PERMIT APP.	DJB
6	9/17/2024	REVISED PERMIT SET	DJB
5	6/27/2024	REVISED PERMIT SET	DJB
4	9/14/2023	DEP PERMIT SET	DJB
3	6/28/2023	75% DESIGN SUBMISSION	DJB
2	2/15/2023	30% DESIGN SUBMISSION	DJB
1	12/9/2022	15% DESIGN SUB REV	DJB
0	11/11/2022	15% DESIGN SUBMISSION	DJB

SHEET NAME

REVEGETATION NOTES, DETAILS AND SCHEDULES

SHEET NO.

C-016

DJCASTELNUOVO, VINNIE \\geiconsultants.com\data\Data_Storage\Working\UNIVERSITY OF NEW ENGLAND\2203703 UNE Marine Science Center Pier\00_CAD\Design\Sheets\2203703-C-016.dwg - 6/6/2025

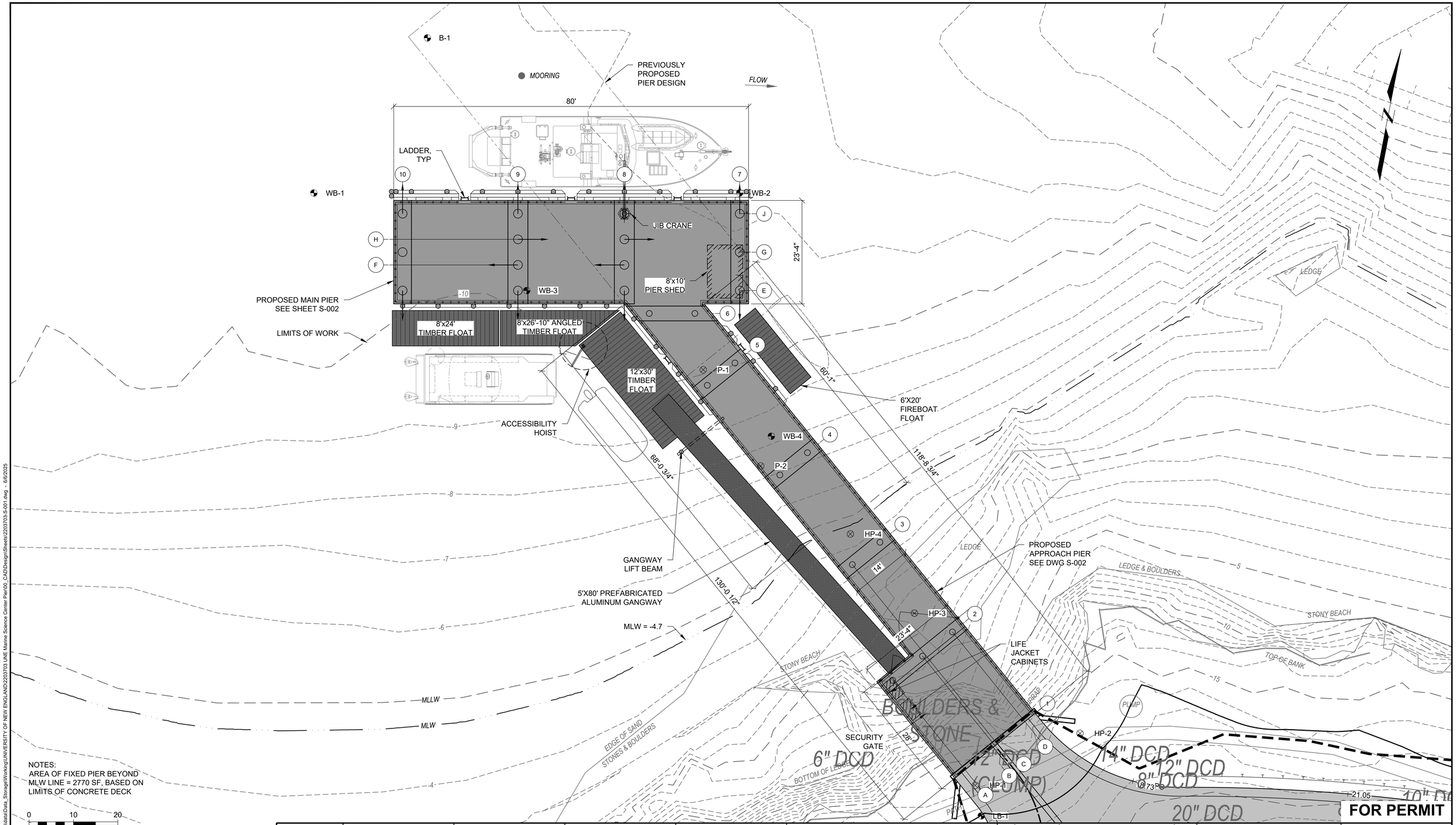

NOTES:
AREA OF FIXED PIER BEYOND MLW LINE = 2770 SF, BASED ON LIMITS OF CONCRETE DECK

0 10 20
SCALE, FEET

ELEVATION	MLLW	NAVD88*
BFE	+19.0	+14.0
HAT	+11.6	+6.6
MHHW	+9.7	+4.7
MHW	+9.3	+4.3
MSL	+4.8	-0.2
MLW	+0.3	-4.7
MLLW	0.0	-5.0

*PROJECT DATUM

Attention:
0 1"
If this scale bar does not measure 1" then drawing is not original scale.

STATE OF MAINE
DANIEL J. BANNON
No. 13033
LICENSED PROFESSIONAL ENGINEER
06/10/2025

Designed:	DJB
Drawn:	JAM
Checked:	BJB
Approved:	BMM
P.E. No:	13033
GEI Project	2203703

GEI Consultants
GEI CONSULTANTS, INC.
5 MILK STREET
PORTLAND, ME 04101
(207)797-8901

UNE
UNIVERSITY OF NEW ENGLAND
11 HILLS BEACH RD.
BIDDEFORD, MAINE

UNIVERSITY OF NEW ENGLAND MARINE SCIENCE CENTER PIER

11 HILLS BEACH ROAD
BIDDEFORD, YORK COUNTY, MAINE

NO	DATE	ISSUE/REVISION	APP
8	6/5/2025	ADDRESS PB COMMENTS	DJB
7	4/16/2025	BIDDEFORD PERMIT APP.	DJB
6	9/17/2024	REVISED PERMIT SET	DJB
5	6/27/2024	REVISED PERMIT SET	DJB
4	9/14/2023	DEP PERMIT SET	DJB
3	6/28/2023	75% DESIGN SUBMISSION	DJB
2	2/15/2023	30% DESIGN SUBMISSION	DJB
1	12/9/2022	15% DESIGN SUB REV	DJB
0	11/11/2022	15% DESIGN SUBMISSION	DJB

SHEET NAME
PIER LAYOUT PLAN

SHEET NO.
S-001

FOR PERMIT

DICASTELNUOVO, VINNIE \\geiconsultants.com\data\Data_Storage\Working\UNIVERSITY OF NEW ENGLAND\2203703 UNE Marine Science Center Pier\00_CAD\Design\Sheets\2203703-S-001.dwg - 6/6/2025

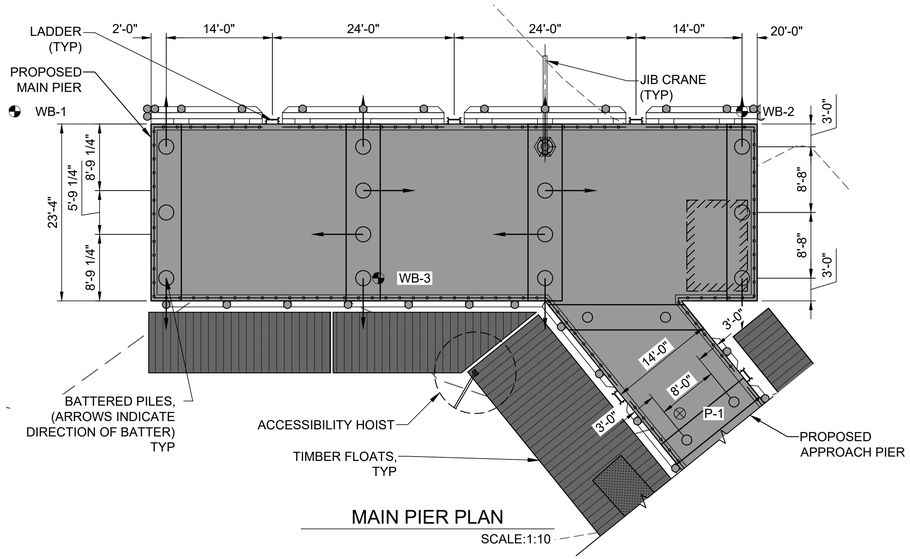

MAIN PIER PLAN

SCALE:1:10

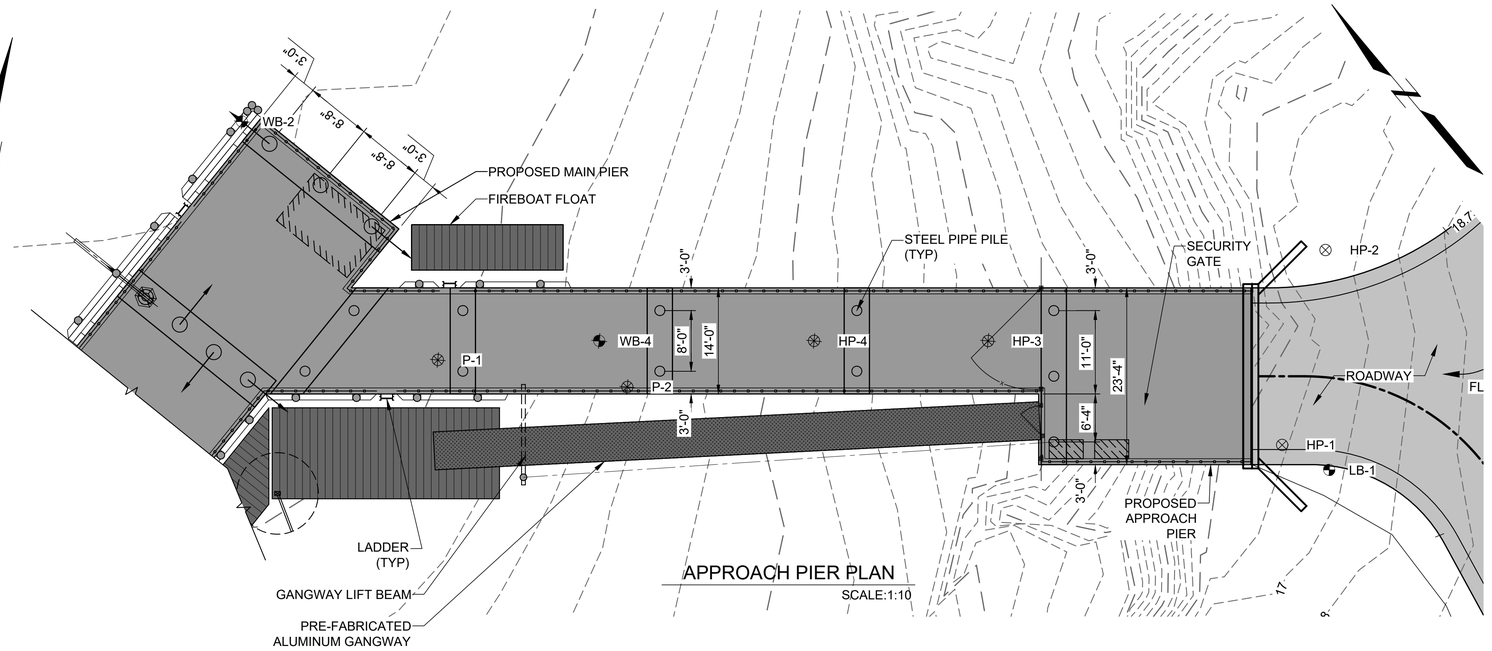

APPROACH PIER PLAN

SCALE:1:10

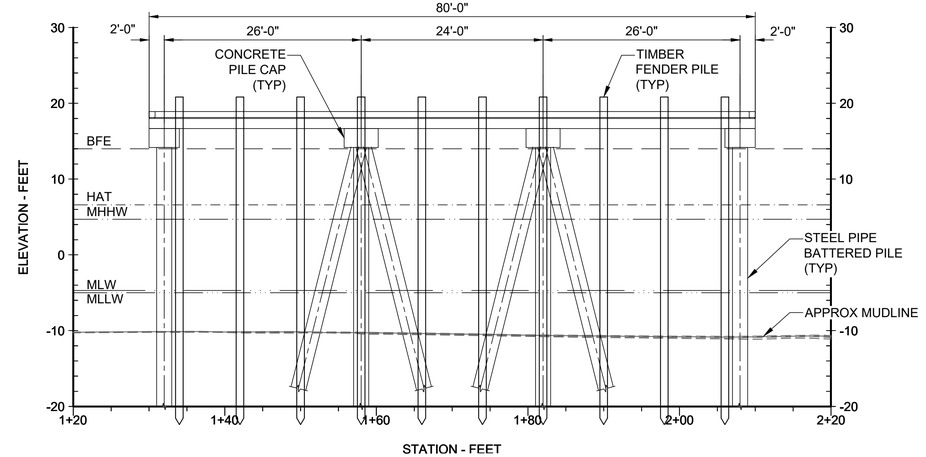

MAIN PIER ELEVATION

SCALE:1:10

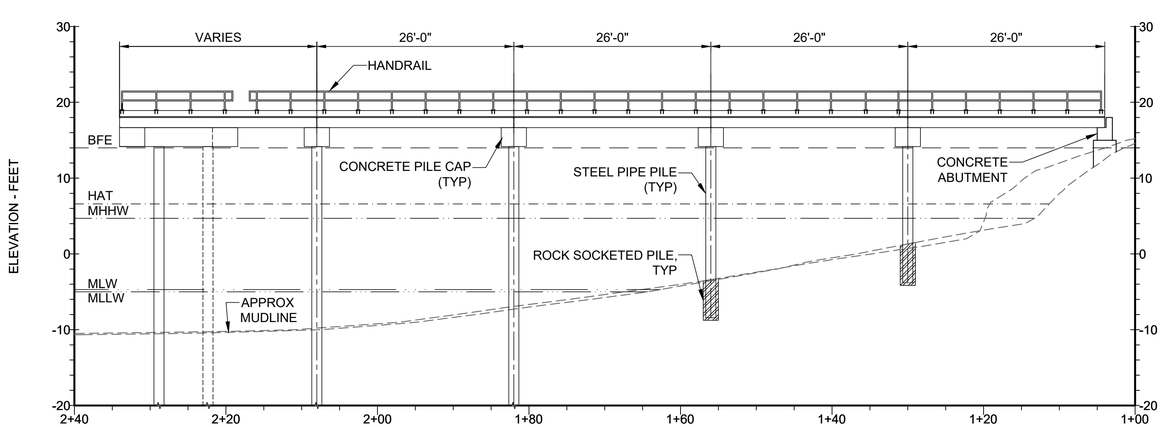

APPROACH PIER ELEVATION

SCALE:1:10

0 10 20

SCALE, FEET

ELEVATION	MLLW	NAVD88*
BFE	+19.0	+14.0
HAT	+11.6	+6.6
MHHW	+9.7	+4.7
MHW	+9.3	+4.3
MSL	+4.8	-0.2
MLW	+0.3	-4.7
MLLW	0.0	-5.0

*PROJECT DATUM

FOR PERMIT

Attention:

0 1"

If this scale bar does not measure 1" then drawing is not original scale.

STATE OF MAINE
DANIEL J. BANNON
No. 13033
LICENSED PROFESSIONAL ENGINEER

06/10/2025

Designed:	DJB
Drawn:	JAM
Checked:	BJB
Approved:	BMM
P.E. No:	13033
GEI Project	2203703

GEI Consultants

GEI CONSULTANTS, INC.
5 MILK STREET
PORTLAND, ME 04101
(207)797-8901

UNIVERSITY OF NEW ENGLAND

11 HILLS BEACH RD.
BIDDEFORD, MAINE

UNIVERSITY OF NEW ENGLAND MARINE SCIENCE CENTER PIER

11 HILLS BEACH ROAD
BIDDEFORD, YORK COUNTY, MAINE

NO	DATE	ISSUE/REVISION	APP
8	6/5/2025	ADDRESS PB COMMENTS	DJB
7	4/16/2025	BIDDEFORD PERMIT APP.	DJB
6	9/17/2024	REVISED PERMIT SET	DJB
5	6/27/2024	REVISED PERMIT SET	DJB
4	9/14/2023	DEP PERMIT SET	DJB
3	6/28/2023	75% DESIGN SUBMISSION	DJB
2	2/15/2023	30% DESIGN SUBMISSION	DJB
1	12/9/2022	15% DESIGN SUB REV	DJB
0	11/11/2022	15% DESIGN SUBMISSION	DJB

SHEET NAME

PIER PLANS AND ELEVATIONS

SHEET NO.

S-002

DJCASTELNUOVO, VINNIE \\gisconsultants.com\data\Data_Storage\Working\UNIVERSITY OF NEW ENGLAND\2203703 UNE Marine Science Center Pier\00_CAD\Design\Sheets\2203703-S-002.dwg - 6/6/2025

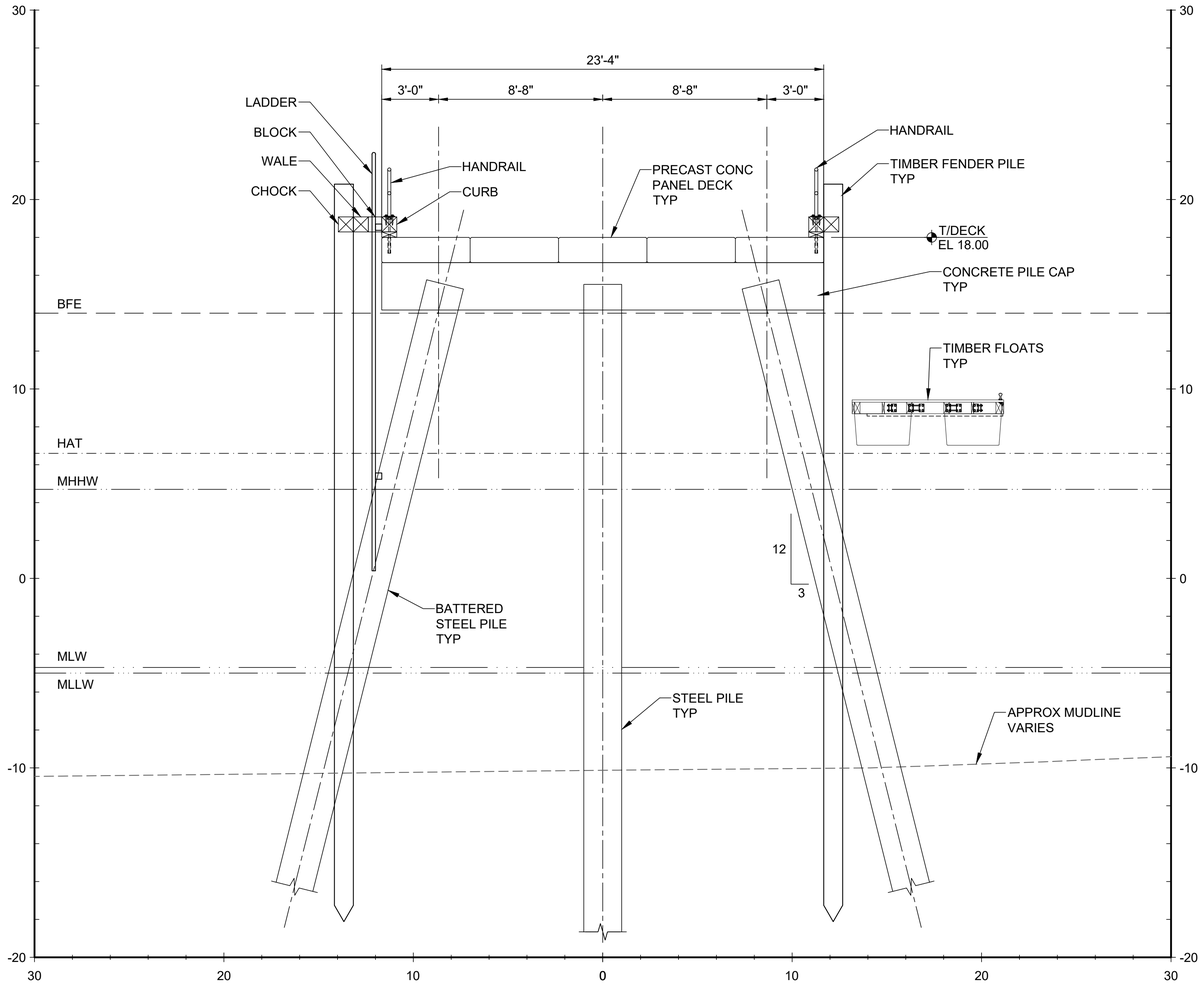

SECTION
MAIN PIER AT BENT 10 SCALE: 1"=4'

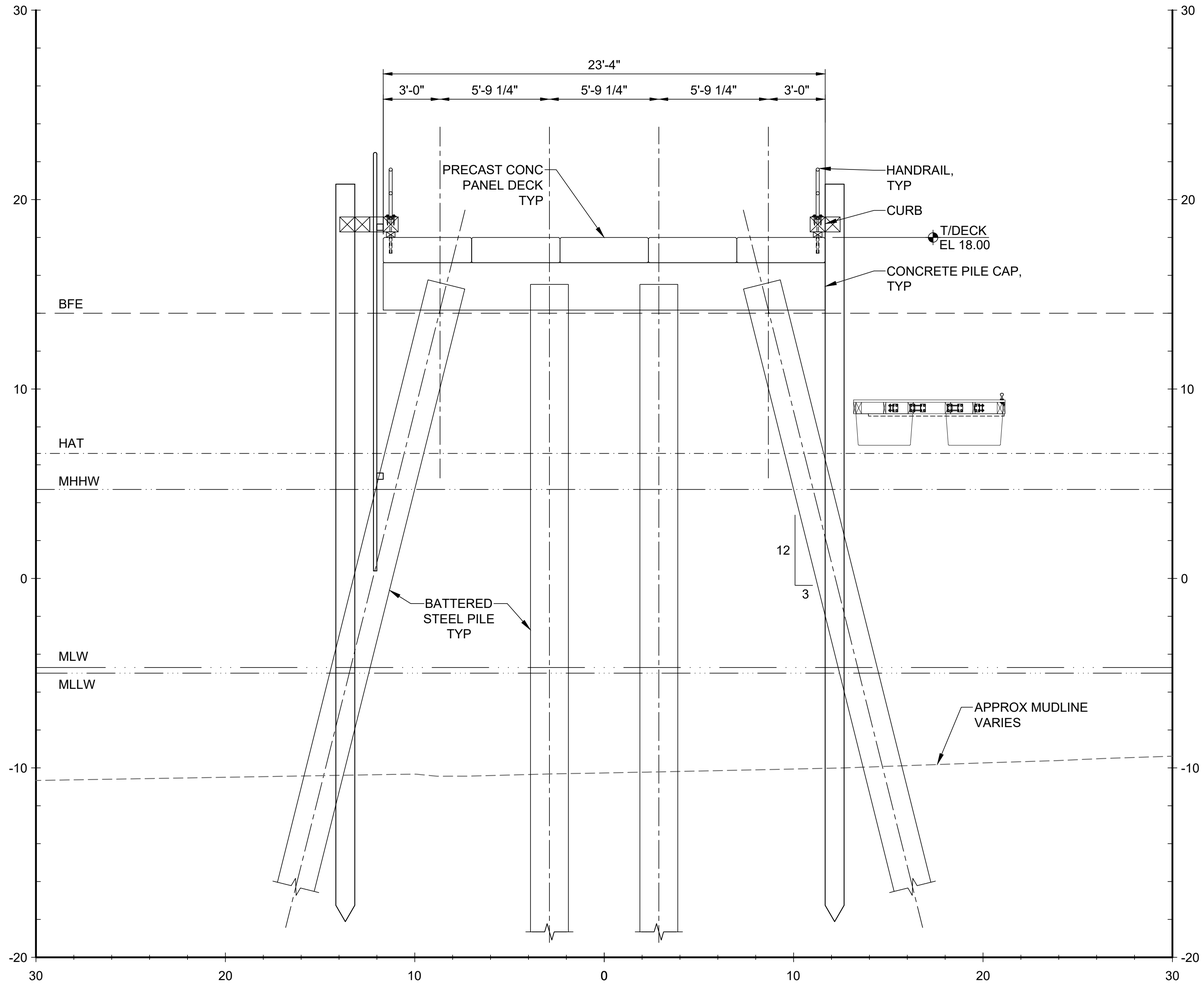

SECTION
MAIN PIER AT BENT 9 SCALE: 1"=4'

0 2 4 8
SCALE, FEET

ELEVATION	MLLW	NAVD88*
BFE	+19.0	+14.0
HAT	+11.6	+6.6
MHHW	+9.7	+4.7
MHW	+9.3	+4.3
MSL	+4.8	-0.2
MLW	+0.3	-4.7
MLLW	0.0	-5.0

*PROJECT DATUM

FOR PERMIT

Attention:
0 1"
If this scale bar does not measure 1" then drawing is not original scale.

STATE OF MAINE
DANIEL J. BANNON
No. 13033
LICENSED PROFESSIONAL ENGINEER
06/10/2025

Designed:	DJB
Drawn:	JAM
Checked:	BJB
Approved:	BMM
P.E. No:	13033
GEI Project	2203703

GEI Consultants
GEI CONSULTANTS, INC.
5 MILK STREET
PORTLAND, ME 04101
(207)797-8901

UNE
UNIVERSITY OF NEW ENGLAND
11 HILLS BEACH RD.
BIDDEFORD, MAINE

UNIVERSITY OF NEW ENGLAND MARINE SCIENCE CENTER PIER

11 HILLS BEACH ROAD
BIDDEFORD, YORK COUNTY, MAINE

NO	DATE	ISSUE/REVISION	APP
8	6/5/2025	ADDRESS PB COMMENTS	DJB
7	4/16/2025	BIDDEFORD PERMIT APP.	DJB
6	9/17/2024	REVISED PERMIT SET	DJB
5	6/27/2024	REVISED PERMIT SET	DJB
4	9/14/2023	DEP PERMIT SET	DJB
3	6/28/2023	75% DESIGN SUBMISSION	DJB
2	2/15/2023	30% DESIGN SUBMISSION	DJB
1	12/9/2022	15% DESIGN SUB REV	DJB
0	11/11/2022	15% DESIGN SUBMISSION	DJB

SHEET NAME
TYPICAL PIER SECTIONS (1 OF 2)

SHEET NO.
S-003

DICASTELNUOVO, VINNIE \\gisconsultants.com\data\Data_Storage\Working\UNIVERSITY OF NEW ENGLAND\2203703 UNE Marine Science Center Pier\00_CAD\Design\Sheets\2203703-S-003.dwg - 6/6/2025

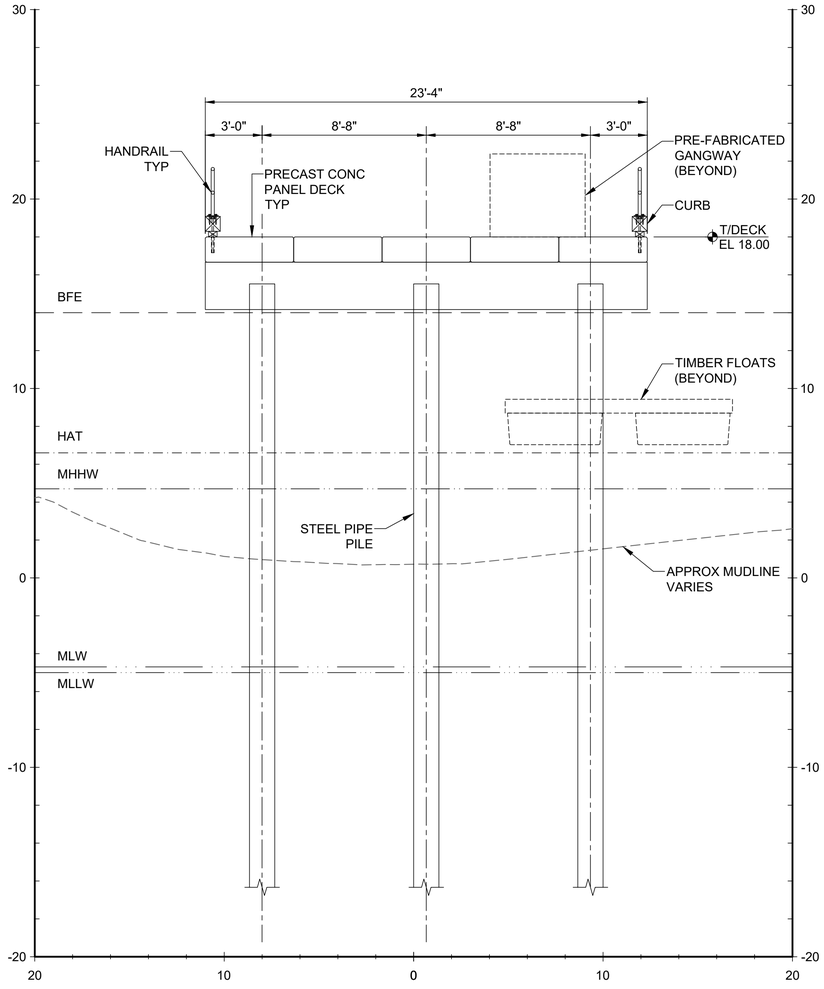

SECTION
28' WIDE APPROACH PIER AT BENT 2 SCALE: 1"=4'

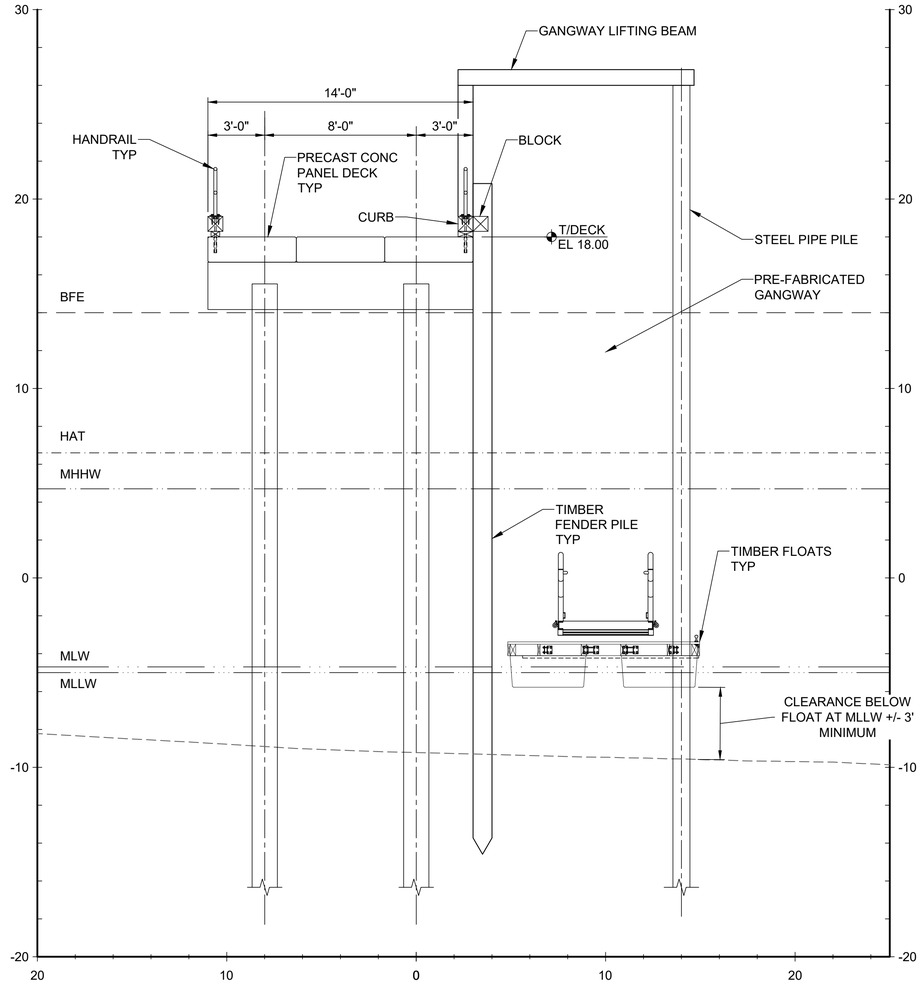

SECTION
14' WIDE APPROACH PIER AT GANGWAY HOIST SCALE: 1"=4'

0 2 4 8
SCALE, FEET

ELEVATION	MLLW	NAVD88*
BFE	+19.0	+14.0
HAT	+11.6	+6.6
MHHW	+9.7	+4.7
MHW	+9.3	+4.3
MSL	+4.8	-0.2
MLW	+0.3	-4.7
MLLW	0.0	-5.0

*PROJECT DATUM

FOR PERMIT

Attention:
0 1"
If this scale bar does not measure 1" then drawing is not original scale.

STATE OF MAINE
DANIEL J. BANNON
No. 13033
LICENSED PROFESSIONAL ENGINEER
06/10/2025

Designed:	DJB
Drawn:	JAM
Checked:	BJB
Approved:	BMM
P.E. No:	13033
GEI Project	2203703

GEI Consultants
GEI CONSULTANTS, INC.
5 MILK STREET
PORTLAND, ME 04101
(207)797-8901

UNIVERSITY OF NEW ENGLAND
11 HILLS BEACH RD.
BIDDEFORD, MAINE

UNIVERSITY OF NEW ENGLAND MARINE SCIENCE CENTER PIER
11 HILLS BEACH ROAD
BIDDEFORD, YORK COUNTY, MAINE

NO	DATE	ISSUE/REVISION	APP
8	6/5/2025	ADDRESS PB COMMENTS	DJB
7	4/16/2025	BIDDEFORD PERMIT APP.	DJB
6	9/17/2024	REVISED PERMIT SET	DJB
5	6/27/2024	REVISED PERMIT SET	DJB
4	9/14/2023	DEP PERMIT SET	DJB
3	6/28/2023	75% DESIGN SUBMISSION	DJB
2	2/15/2023	30% DESIGN SUBMISSION	DJB
1	12/9/2022	15% DESIGN SUB REV	DJB
0	11/11/2022	15% DESIGN SUBMISSION	DJB

SHEET NAME
TYPICAL PIER SECTIONS (2 OF 2)

SHEET NO.
S-004

DJCASTELNUOVO, VINNIE \\geiconsultants.com\data\Data_Storage\Working\UNIVERSITY OF NEW ENGLAND\2203703 UNE Marine Science Center Pier\00_CAD\Design\Sheets\2203703-S-004.dwg - 6/6/2025

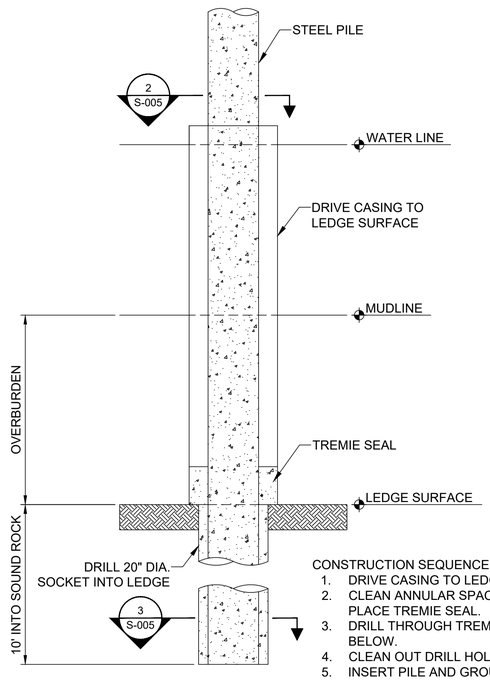

CONSTRUCTION SEQUENCE

1. DRIVE CASING TO LEDGE SURFACE.
2. CLEAN ANNULAR SPACE TO LEDGE SURFACE, PLACE TREMIE SEAL.
3. DRILL THROUGH TREMIE INTO SOUND ROCK BELOW.
4. CLEAN OUT DRILL HOLE.
5. INSERT PILE AND GROUT TO SURFACE.
6. REMOVE CASING.
7. FILL STEEL PIPE PILE TO TOP WITH CONCRETE.

1 DETAIL
PILE SOCKET SCALE: 1" = 2'

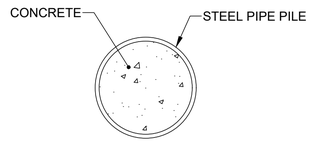

2 SECTION
CONCRETE FILLED STEEL PIPE PILE SCALE: 1" = 1'

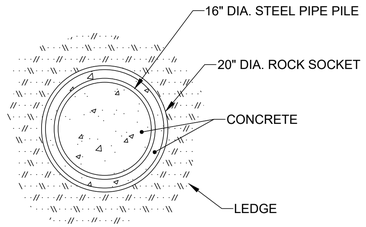

3 SECTION
ROCK SOCKET SCALE: 1" = 1'

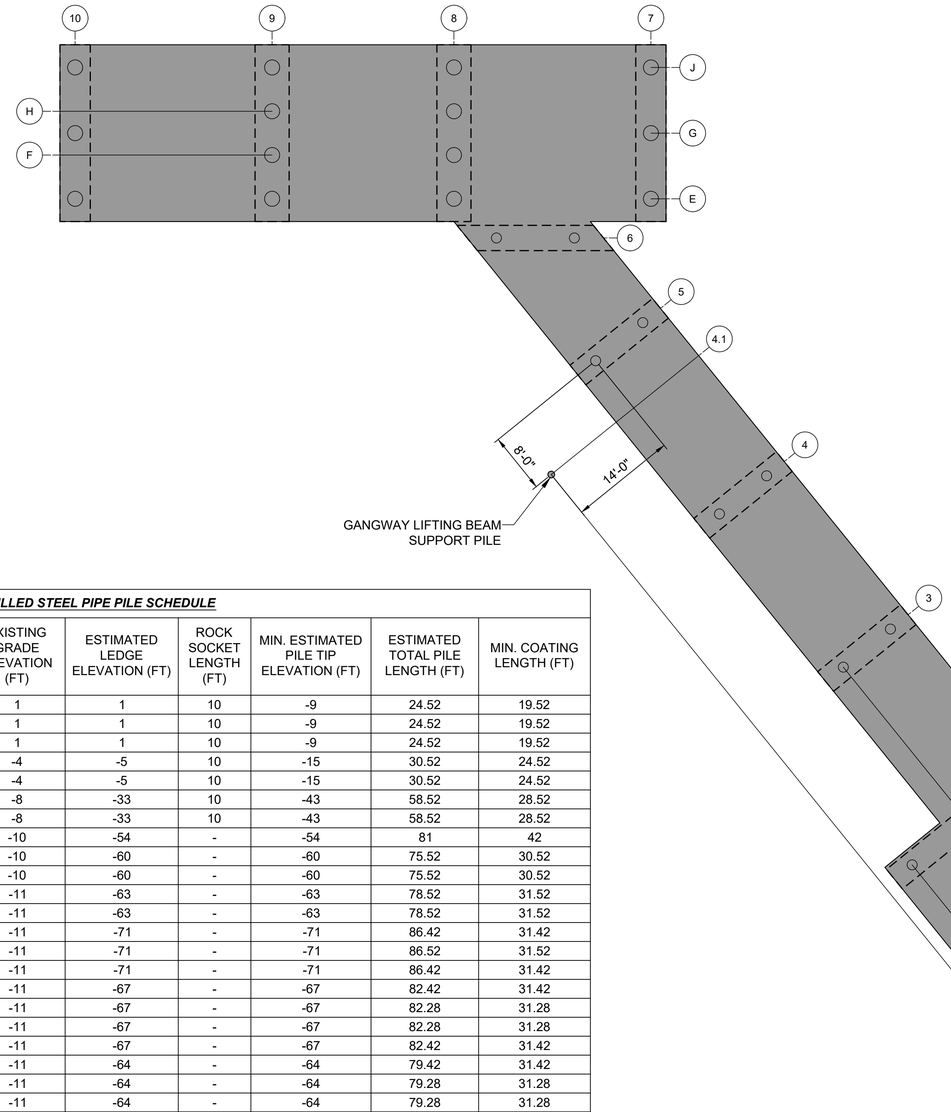

DETAIL
MAIN PIER SCALE: 1" = 10"

CONCRETE FILLED STEEL PIPE PILE SCHEDULE

PILE DESIGNATION	PILE SIZE (INCHES)	BATTER	CUTOFF ELEVATION (FT)	EXISTING GRADE ELEVATION (FT)	ESTIMATED LEDGE ELEVATION (FT)	ROCK SOCKET LENGTH (FT)	MIN. ESTIMATED PILE TIP ELEVATION (FT)	ESTIMATED TOTAL PILE LENGTH (FT)	MIN. COATING LENGTH (FT)
2A	16x5/8	VERTICAL	15.52	1	1	10	-9	24.52	19.52
2B	16x5/8	VERTICAL	15.52	1	1	10	-9	24.52	19.52
2D	16x5/8	VERTICAL	15.52	1	1	10	-9	24.52	19.52
3C	16x5/8	VERTICAL	15.52	-4	-5	10	-15	30.52	24.52
3D	16x5/8	VERTICAL	15.52	-4	-5	10	-15	30.52	24.52
4C	16x5/8	VERTICAL	15.52	-8	-33	10	-43	58.52	28.52
4D	16x5/8	VERTICAL	15.52	-8	-33	10	-43	58.52	28.52
4.1-A.1	10.75x5/8	VERTICAL	27	-10	-54	-	-54	81	42
5C	16x5/8	VERTICAL	15.52	-10	-60	-	-60	75.52	30.52
5D	16x5/8	VERTICAL	15.52	-10	-60	-	-60	75.52	30.52
6C	16x5/8	VERTICAL	15.52	-11	-63	-	-63	78.52	31.52
6D	16x5/8	VERTICAL	15.52	-11	-63	-	-63	78.52	31.52
7E	24x5/8	3:12	15.42	-11	-71	-	-71	86.42	31.42
7G	24x5/8	VERTICAL	15.52	-11	-71	-	-71	86.52	31.52
7J	24x5/8	3:12	15.42	-11	-71	-	-71	86.42	31.42
8E	24x5/8	3:12	15.42	-11	-67	-	-67	82.42	31.42
8F	24x5/8	3:12	15.28	-11	-67	-	-67	82.28	31.28
8H	24x5/8	3:12	15.28	-11	-67	-	-67	82.28	31.28
8J	24x5/8	3:12	15.42	-11	-67	-	-67	82.42	31.42
9E	24x5/8	3:12	15.42	-11	-64	-	-64	79.42	31.42
9F	24x5/8	3:12	15.28	-11	-64	-	-64	79.28	31.28
9H	24x5/8	3:12	15.28	-11	-64	-	-64	79.28	31.28
9J	24x5/8	3:12	15.42	-11	-64	-	-64	79.42	31.42
10E	24x5/8	3:12	15.42	-11	-66	-	-66	81.42	31.42
10G	24x5/8	VERTICAL	15.52	-11	-66	-	-66	81.52	31.52
10J	24x5/8	3:12	15.42	-11	-66	-	-66	81.42	31.42
							TOTAL	1821.5	

SCHEDULE NOTES

1. ALL ELEVATIONS REFERENCED IN TABLE ARE IN NAVD88 DATUM.

0 10 20
SCALE, FEET

0 1 2 4
SCALE, FEET

ELEVATION	MLLW	NAVD88*
BFE	+19.0	+14.0
HAT	+11.6	+6.6
MHHW	+9.7	+4.7
MHW	+9.3	+4.3
MSL	+4.8	-0.2
MLW	+0.3	-4.7
MLLW	0.0	-5.0

*PROJECT DATUM

FOR PERMIT

Attention:
0 1"
If this scale bar does not measure 1" then drawing is not original scale.

STATE OF MAINE
DANIEL J. BANNON
No. 13033
LICENSED PROFESSIONAL ENGINEER
06/10/2025

Designed:	DJB
Drawn:	JAM
Checked:	BJB
Approved:	BMM
P.E. No:	13033
GEI Project	2203703

GEI Consultants
GEI CONSULTANTS, INC.
5 MILK STREET
PORTLAND, ME 04101
(207)797-8901

UNE
UNIVERSITY OF NEW ENGLAND
11 HILLS BEACH RD.
BIDDEFORD, MAINE

UNIVERSITY OF NEW ENGLAND MARINE SCIENCE CENTER PIER

11 HILLS BEACH ROAD
BIDDEFORD, YORK COUNTY, MAINE

NO	DATE	ISSUE/REVISION	APP
8	6/5/2025	ADDRESS PB COMMENTS	DJB
7	4/16/2025	BIDDEFORD PERMIT APP.	DJB
6	9/17/2024	REVISED PERMIT SET	DJB
5	6/27/2024	REVISED PERMIT SET	DJB
4	9/14/2023	DEP PERMIT SET	DJB
3	6/28/2023	75% DESIGN SUBMISSION	DJB
2	2/15/2023	30% DESIGN SUBMISSION	DJB
1	12/9/2022	15% DESIGN SUB REV	DJB
0	11/11/2022	15% DESIGN SUBMISSION	DJB

SHEET NAME: **PILE PLAN**

SHEET NO.: **S-005**

DICASTELNUOVO, VINNIE \\geiconsultants.com\data\Data_Storage\Working\UNIVERSITY OF NEW ENGLAND\2203703 UNE Marine Science Center Pier\00_CAD\Design\Sheets\2203703-S-005.dwg - 6/6/2025

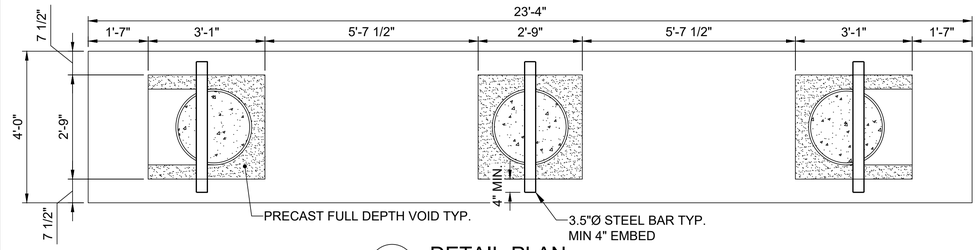

1 DETAIL-PLAN
MAIN PIER
BENT 7 & 10
SCALE: 1" = 2'

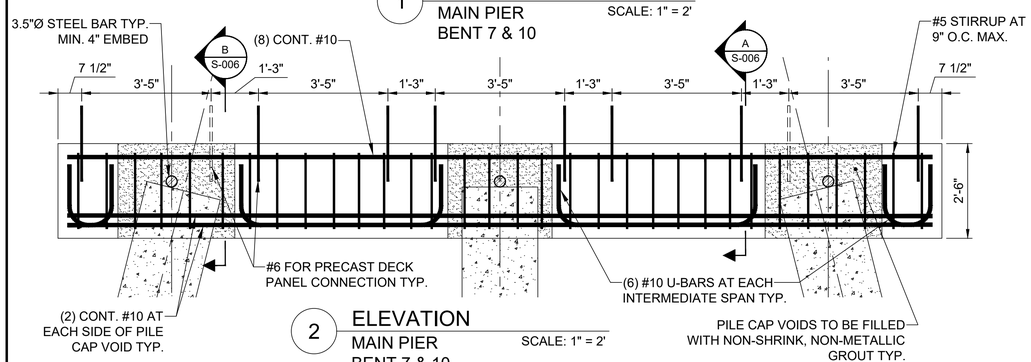

2 ELEVATION
MAIN PIER
BENT 7 & 10
SCALE: 1" = 2'

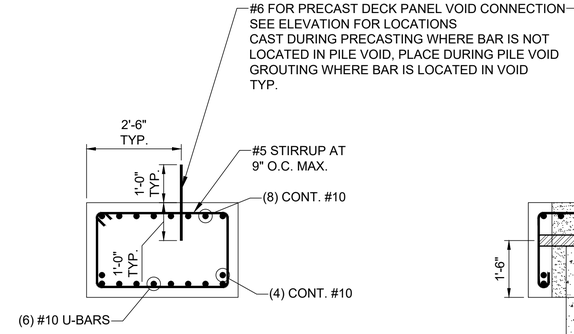

A SECTION
MAIN PIER
BENT 7 & 10
SCALE: 1" = 2'

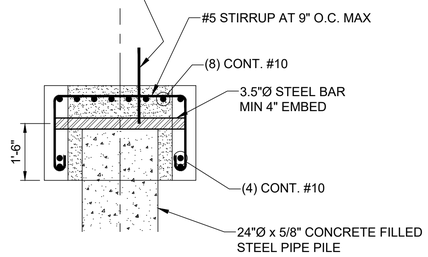

B SECTION
MAIN PIER
BENT 7 & 10
SCALE: 1" = 2'

5 DETAIL
MAIN PIER
N.T.S.

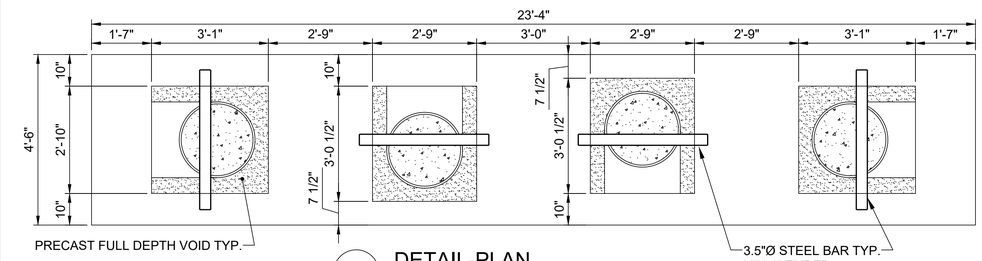

3 DETAIL-PLAN
MAIN PIER
BENT 8 & 9
SCALE: 1" = 2'

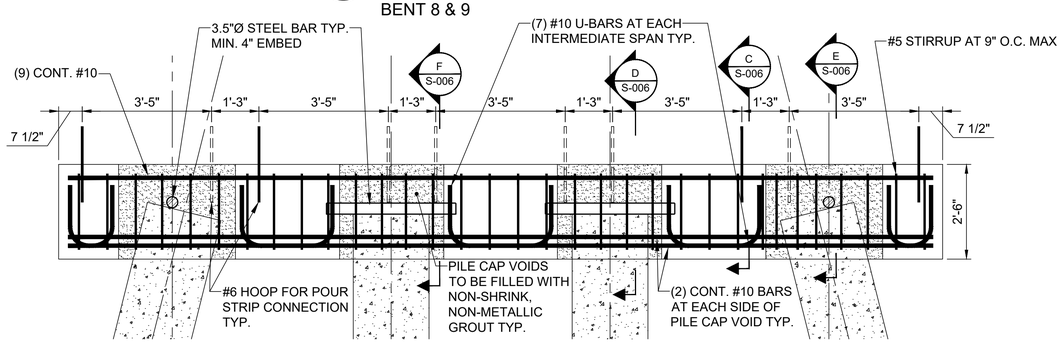

4 ELEVATION
MAIN PIER
BENT 8 & 9
SCALE: 1" = 2'

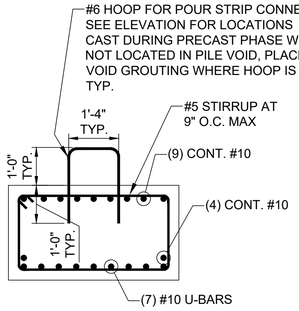

C SECTION
MAIN PIER
BENT 8 & 9
SCALE: 1" = 2'

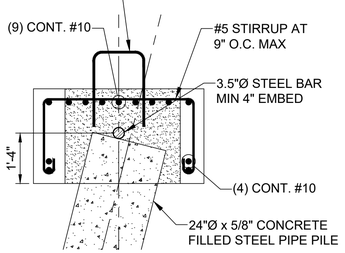

D SECTION
MAIN PIER
BENT 8 & 9
SCALE: 1" = 2'

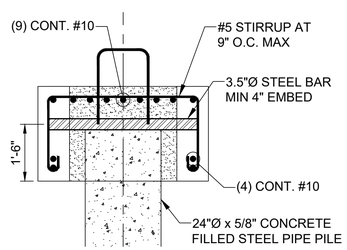

E SECTION
MAIN PIER
BENT 8 & 9
SCALE: 1" = 2'

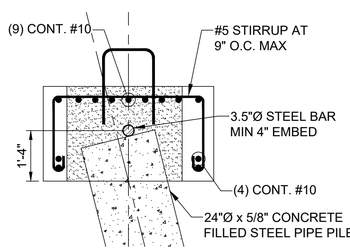

F SECTION
MAIN PIER
BENT 8 & 9
SCALE: 1" = 2'

FOR PERMIT

0 1 2 4
SCALE, FEET

ELEVATION	MLLW	NAVD88*
BFE	+19.0	+14.0
HAT	+11.6	+6.6
MHHW	+9.7	+4.7
MHW	+9.3	+4.3
MSL	+4.8	-0.2
MLW	+0.3	-4.7
MLLW	0.0	-5.0

*PROJECT DATUM

Attention:
0 1"
If this scale bar does not measure 1" then drawing is not original scale.

STATE OF MAINE
DANIEL J. BANNON
No. 13033
LICENSED PROFESSIONAL ENGINEER
06/10/2025

Designed:	DJB
Drawn:	JAM
Checked:	BJB
Approved:	BMM
P.E. No:	13033
GEI Project	2203703

GEI Consultants
GEI CONSULTANTS, INC.
5 MILK STREET
PORTLAND, ME 04101
(207)797-8901

UNIVERSITY OF NEW ENGLAND
11 HILLS BEACH RD.
BIDDEFORD, MAINE

UNIVERSITY OF NEW ENGLAND MARINE SCIENCE CENTER PIER

11 HILLS BEACH ROAD
BIDDEFORD, YORK COUNTY, MAINE

NO	DATE	ISSUE/REVISION	APP
8	6/5/2025	ADDRESS PB COMMENTS	DJB
7	4/16/2025	BIDDEFORD PERMIT APP.	DJB
6	9/17/2024	REVISED PERMIT SET	DJB
5	6/27/2024	REVISED PERMIT SET	DJB
4	9/14/2023	DEP PERMIT SET	DJB
3	6/28/2023	75% DESIGN SUBMISSION	DJB
2	2/15/2023	30% DESIGN SUBMISSION	DJB
1	12/9/2022	15% DESIGN SUB REV	DJB
0	11/11/2022	15% DESIGN SUBMISSION	DJB

SHEET NAME
PRECAST PILE CAP PLAN AND SECTIONS 1 OF 2

SHEET NO.
S-006

DICASTELNUOVO, VINNIE \\geiconsultants.com\data\Data_Storage\Working\UNIVERSITY OF NEW ENGLAND\2203703 UNE Marine Science Center Pier\00_CAD\Design\Sheets\2203703-S-006.dwg - 6/6/2025

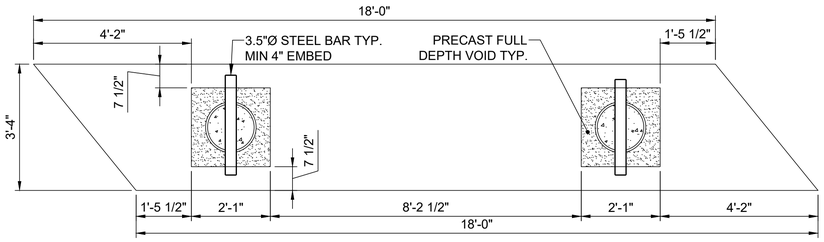

1 DETAIL-PLAN
APPROACH PIER BENT 6 — SCALE: 1" = 2'

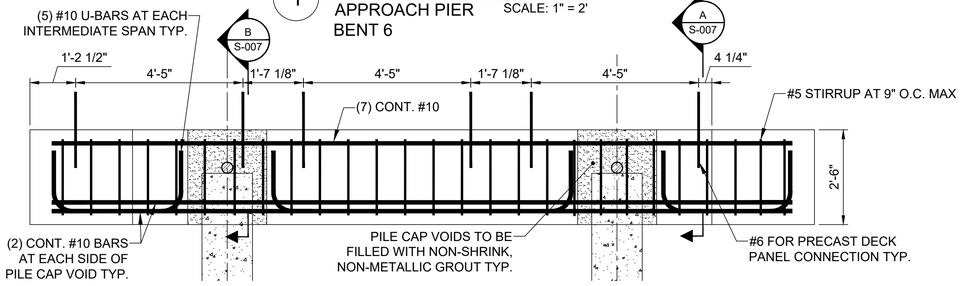

2 ELEVATION
APPROACH PIER BENT 6 — SCALE: 1" = 2'

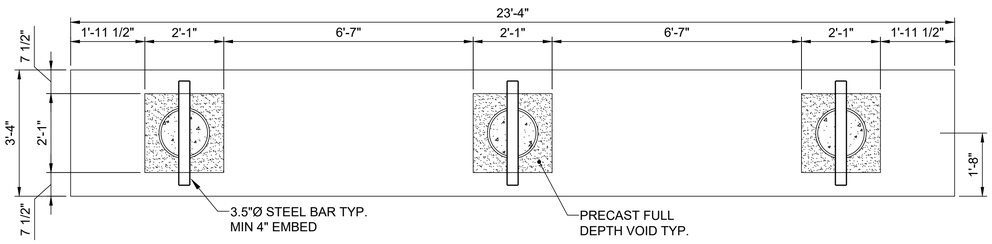

3 DETAIL-PLAN
APPROACH PIER BENT 2 — SCALE: 1" = 2'

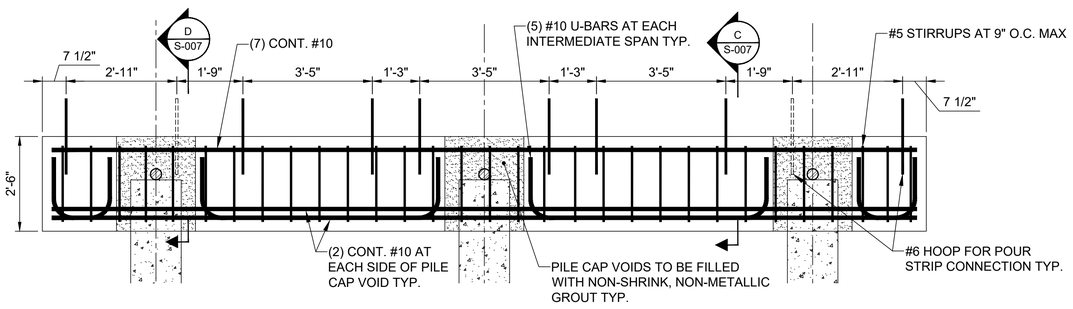

4 ELEVATION
APPROACH PIER BENT 2 — SCALE: 1" = 2'

0 1 2 4
SCALE, FEET

ELEVATION	MLLW	NAVD88*
BFE	+19.0	+14.0
HAT	+11.6	+6.6
MHHW	+9.7	+4.7
MHW	+9.3	+4.3
MSL	+4.8	-0.2
MLW	+0.3	-4.7
MLLW	0.0	-5.0

*PROJECT DATUM

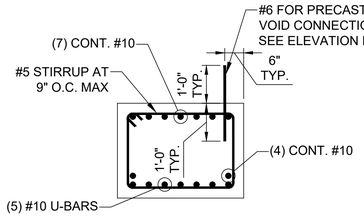

A SECTION
APPROACH PIER BENT 6 — SCALE: 1" = 2'

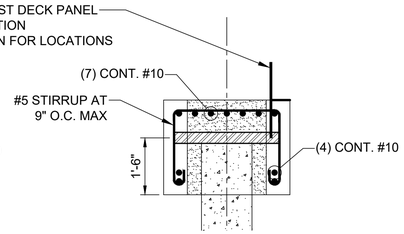

B SECTION
APPROACH PIER BENT 6 — SCALE: 1" = 2'

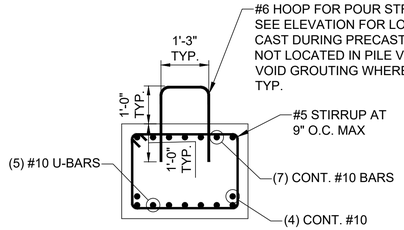

C SECTION
APPROACH PIER BENTS 2-5 — SCALE: 1" = 2'

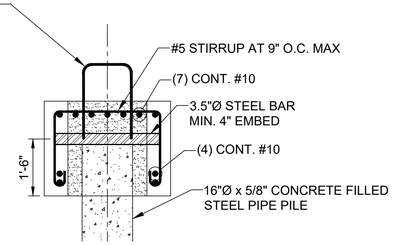

D SECTION
APPROACH PIER BENTS 2-5 — SCALE: 1" = 2'

7 DETAIL
MAIN PIER — N.T.S.

5 DETAIL-PLAN
APPROACH PIER BENTS 3-5 — SCALE: 1" = 2'

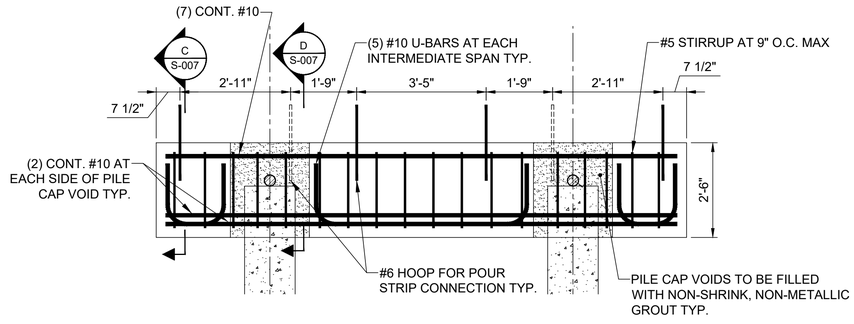

6 ELEVATION
APPROACH PIER BENTS 3-5 — SCALE: 1" = 2'

FOR PERMIT

Attention:
0 1"
If this scale bar does not measure 1" then drawing is not original scale.

STATE OF MAINE
DANIEL J. BANNON
No. 13033
LICENSED PROFESSIONAL ENGINEER
06/10/2025

Designed:	DJB
Drawn:	JAM
Checked:	BJB
Approved:	BMM
P.E. No:	13033
GEI Project	2203703

GEI Consultants
GEI CONSULTANTS, INC.
5 MILK STREET
PORTLAND, ME 04101
(207)797-8901

UNE
UNIVERSITY OF NEW ENGLAND
11 HILLS BEACH RD.
BIDDEFORD, MAINE

UNIVERSITY OF NEW ENGLAND MARINE SCIENCE CENTER PIER
11 HILLS BEACH ROAD
BIDDEFORD, YORK COUNTY, MAINE

NO	DATE	ISSUE/REVISION	APP
8	6/5/2025	ADDRESS PB COMMENTS	DJB
7	4/16/2025	BIDDEFORD PERMIT APP.	DJB
6	9/17/2024	REVISED PERMIT SET	DJB
5	6/27/2024	REVISED PERMIT SET	DJB
4	9/14/2023	DEP PERMIT SET	DJB
3	6/28/2023	75% DESIGN SUBMISSION	DJB
2	2/15/2023	30% DESIGN SUBMISSION	DJB
1	12/9/2022	15% DESIGN SUB REV	DJB
0	11/11/2022	15% DESIGN SUBMISSION	DJB

SHEET NAME
PRECAST PILE CAP PLAN AND SECTIONS 2 OF 2

SHEET NO.
S-007

DJCASTELNUOVO, VINNIE \\bos1v-fs02\Data_Storage\Working\UNIVERSITY OF NEW ENGLAND\2203703 UNE Marine Science Center Pier\00_CAD\Design\Sheets\2203703-S-007.dwg - 6/6/2025

PRECAST DECK PANEL SCHEDULE					
PANEL ID	A	B	C	D	QTY.
A	4'-8"	25'-2"	-	-	5
B	4'-8"	24'-3"	-	-	9
C	4'-8"	-	13'-3"	17'-0"	1
D	4'-8"	-	17'-0"	20'-9 1/2"	1
E	4'-8"	-	20'-9 1/2"	24'-7"	1
F	4'-8"	26'-0"	-	-	10
G	4'-8"	22'-0"	-	-	5

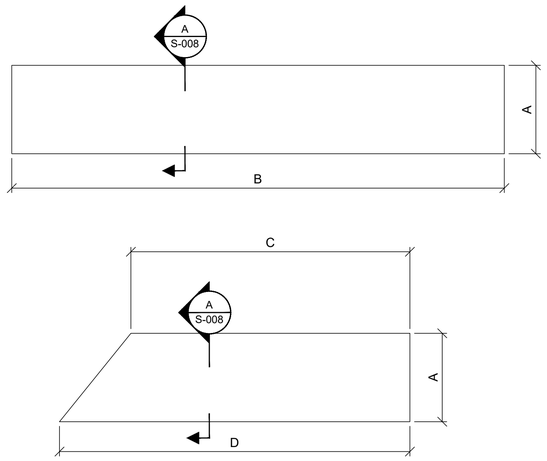

1 DETAIL-PLAN
PRECAST DECK PANEL SCALE: 1"=4'

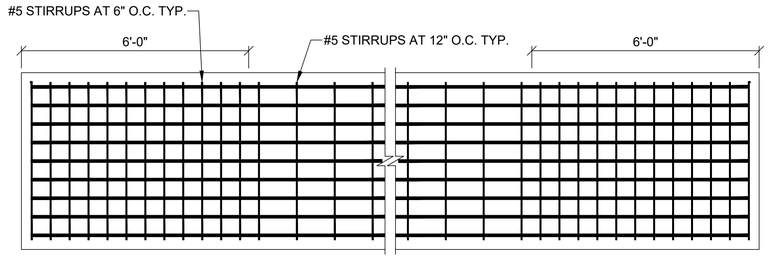

3 DETAIL-PLAN PLANKS A, B, F, & G
PRECAST DECK PANEL
STIRRUP SPACING SCALE: 1"=2'

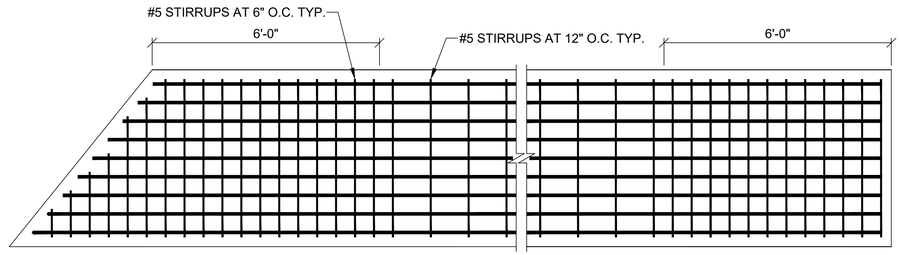

4 DETAIL-PLAN PLANKS C, D, & E
PRECAST DECK PANEL
STIRRUP SPACING SCALE: 1"=2'

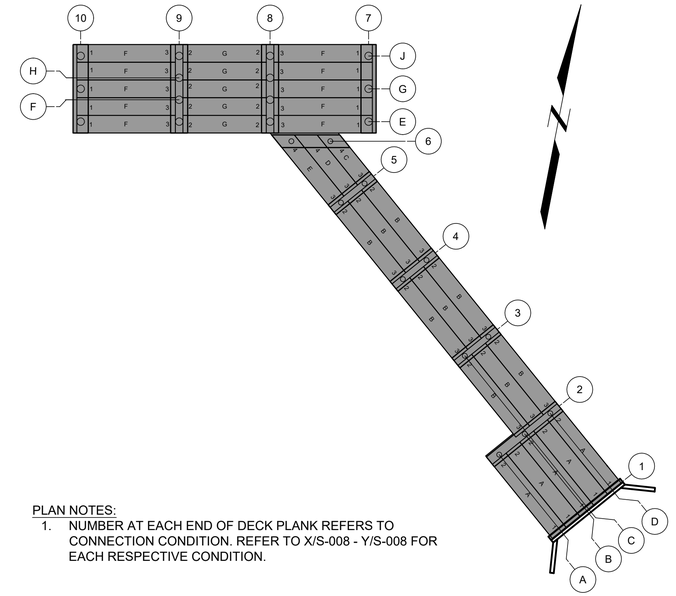

PLAN NOTES:
1. NUMBER AT EACH END OF DECK PLANK REFERS TO CONNECTION CONDITION. REFER TO X/S-008 - Y/S-008 FOR EACH RESPECTIVE CONDITION.

9 DETAIL
PIER DECK PANELS N.T.S.

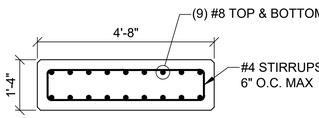

A SECTION
PRECAST DECK PANEL SCALE: 1"=2'

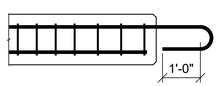

B SECTION
PRECAST DECK PANEL
CONNECTION END 2 & 3 SCALE: 1"=2'

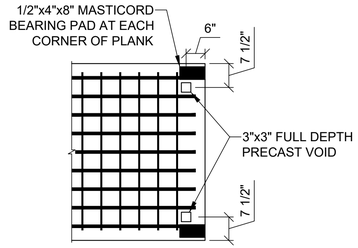

5 DETAIL - PLAN
DECK PANEL
CONNECTION 1 SCALE: 1"=2'

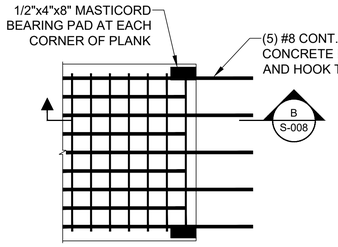

6 DETAIL - PLAN
DECK PANEL
CONNECTION 2 SCALE: 1"=2'

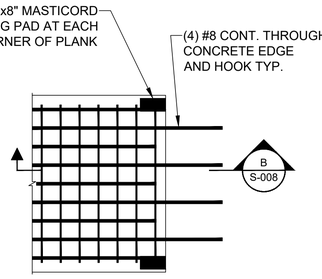

7 DETAIL - PLAN
DECK PANEL
CONNECTION 3 SCALE: 1"=2'

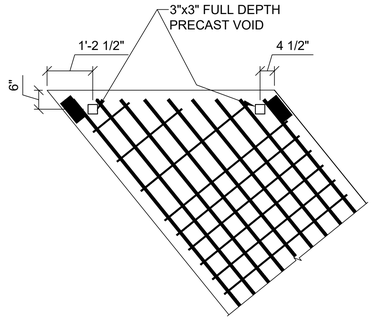

8 DETAIL - PLAN
DECK PANEL
CONNECTION 1 SCALE: 1"=2'

0 10 20
SCALE, FEET

0 1 2 4
SCALE, FEET

ELEVATION	MLLW	NAVD88*
BFE	+19.0	+14.0
HAT	+11.6	+6.6
MHHW	+9.7	+4.7
MHW	+9.3	+4.3
MSL	+4.8	-0.2
MLW	+0.3	-4.7
MLLW	0.0	-5.0

*PROJECT DATUM

FOR PERMIT

Attention:
0 1"
If this scale bar does not measure 1" then drawing is not original scale.

STATE OF MAINE
DANIEL J. BANNON
No. 13033
LICENSED PROFESSIONAL ENGINEER
06/10/2025

Designed:	DJB
Drawn:	JAM
Checked:	BJB
Approved:	BMM
P.E. No:	13033
GEI Project	2203703

GEI Consultants
GEI CONSULTANTS, INC.
5 MILK STREET
PORTLAND, ME 04101
(207)797-8901

UNIVERSITY OF NEW ENGLAND
11 HILLS BEACH RD.
BIDDEFORD, MAINE

UNIVERSITY OF NEW ENGLAND MARINE SCIENCE CENTER PIER
11 HILLS BEACH ROAD
BIDDEFORD, YORK COUNTY, MAINE

NO	DATE	ISSUE/REVISION	APP
8	6/5/2025	ADDRESS PB COMMENTS	DJB
7	4/16/2025	BIDDEFORD PERMIT APP.	DJB
6	9/17/2024	REVISED PERMIT SET	DJB
5	6/27/2024	REVISED PERMIT SET	DJB
4	9/14/2023	DEP PERMIT SET	DJB
3	6/28/2023	75% DESIGN SUBMISSION	DJB
2	2/15/2023	30% DESIGN SUBMISSION	DJB
1	12/9/2022	15% DESIGN SUB REV	DJB
0	11/11/2022	15% DESIGN SUBMISSION	DJB

SHEET NAME
PRECAST DECK PANEL PLAN

SHEET NO.
S-008

D:\CASTELNUOVO, VINNIE \\cos1v-fs02\Data_Storage\Working\UNIVERSITY OF NEW ENGLAND\2203703 UNE Marine Science Center Pier\00_CAD\Design\Sheets\2203703-S-008.dwg - 6/6/2025

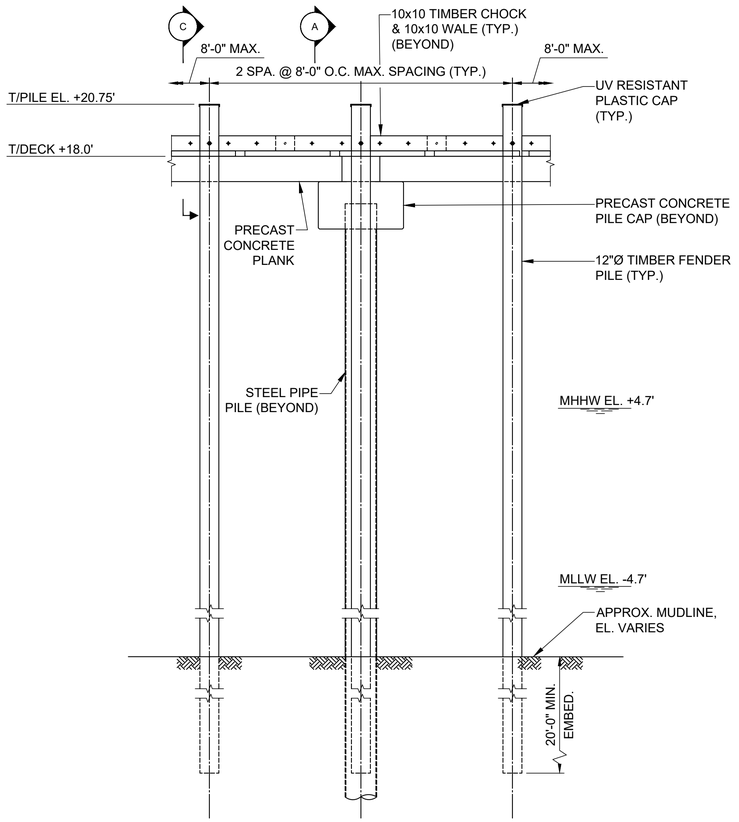

TIMBER FENDER DETAIL

SCALE: 1/4" = 1'-0"

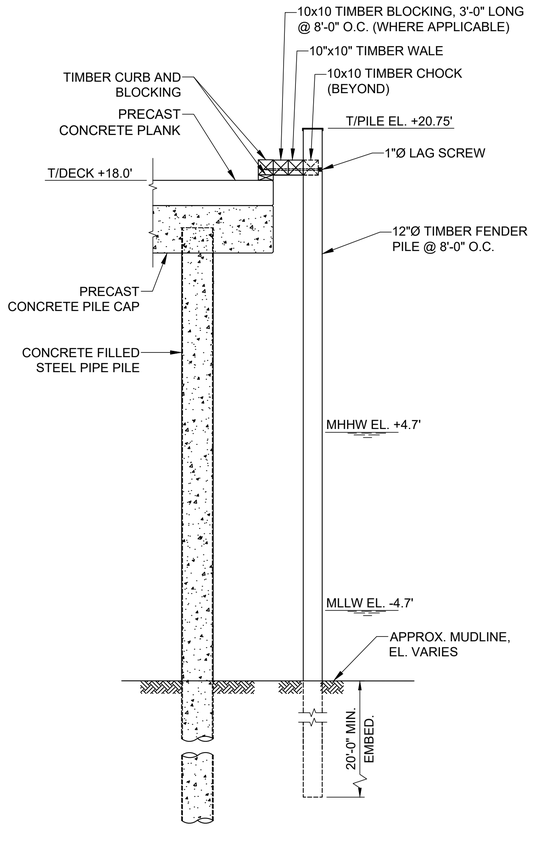

A TIMBER FENDER SECTION

SCALE: 1/4" = 1'-0"

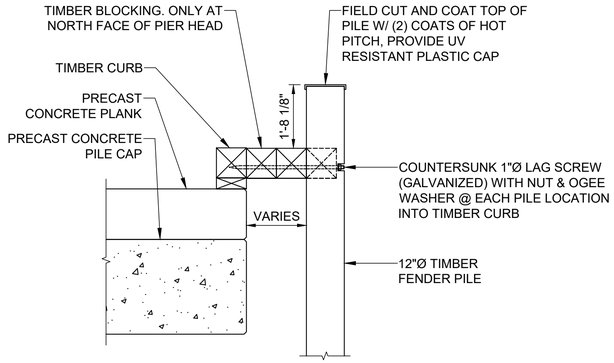

C FENDER PILE CONNECTION

SCALE: 1/2" = 1'-0"

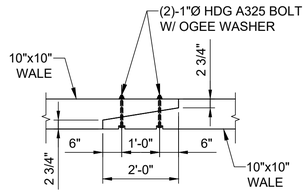

D WALE SPLICE DETAIL

SCALE: 1/2" = 1'-0"

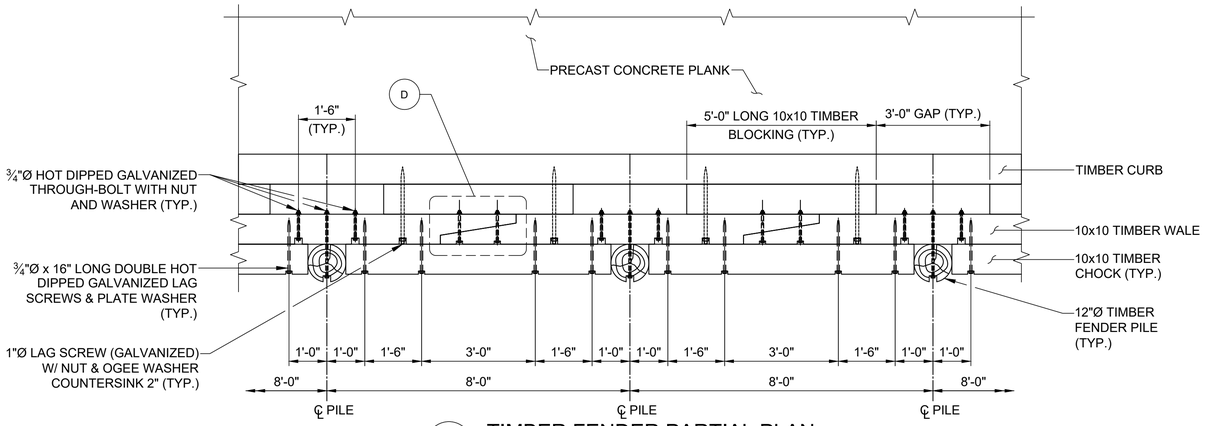

B TIMBER FENDER PARTIAL PLAN

SCALE: 1/2" = 1'-0"

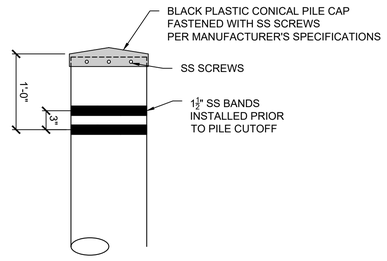

E PILE BANDING DETAIL

SCALE: 1" = 1'-0"

ELEVATION	MLLW	NAVD88*
BFE	+19.0	+14.0
HAT	+11.6	+6.6
MHHW	+9.7	+4.7
MHW	+9.3	+4.3
MSL	+4.8	-0.2
MLW	+0.3	-4.7
MLLW	0.0	-5.0

*PROJECT DATUM

FOR PERMIT

Attention:

0 1"

If this scale bar does not measure 1" then drawing is not original scale.

STATE OF MAINE DANIEL J. BANNON No. 13033 LICENSED PROFESSIONAL ENGINEER

06/10/2025

Designed:	DJB
Drawn:	JAM
Checked:	BJB
Approved:	BMM
P.E. No:	13033
GEI Project	2203703

GEI Consultants
GEI CONSULTANTS, INC.
5 MILK STREET
PORTLAND, ME 04101
(207)797-8901

UNE
UNIVERSITY OF NEW ENGLAND
11 HILLS BEACH RD.
BIDDEFORD, MAINE

UNIVERSITY OF NEW ENGLAND MARINE SCIENCE CENTER PIER
11 HILLS BEACH ROAD
BIDDEFORD, YORK COUNTY, MAINE

NO	DATE	ISSUE/REVISION	APP
8	6/5/2025	ADDRESS PB COMMENTS	DJB
7	4/16/2025	BIDDEFORD PERMIT APP.	DJB
6	9/17/2024	REVISED PERMIT SET	DJB
5	6/27/2024	REVISED PERMIT SET	DJB
4	9/14/2023	DEP PERMIT SET	DJB
3	6/28/2023	75% DESIGN SUBMISSION	DJB
2	2/15/2023	30% DESIGN SUBMISSION	DJB
1	12/9/2022	15% DESIGN SUB REV	DJB
0	11/11/2022	15% DESIGN SUBMISSION	DJB

SHEET NAME: **MISCELLANEOUS DETAILS (1 OF 5)**

SHEET NO.: **S-009**

DiCASTELNUOVO, VINNIE \\bost1v-fs02\Data_Storage\Working\UNIVERSITY OF NEW ENGLAND\2203703 UNE Marine Science Center Pier\00_CAD\Design\Sheets\2203703-S-009.dwg - 6/6/2025

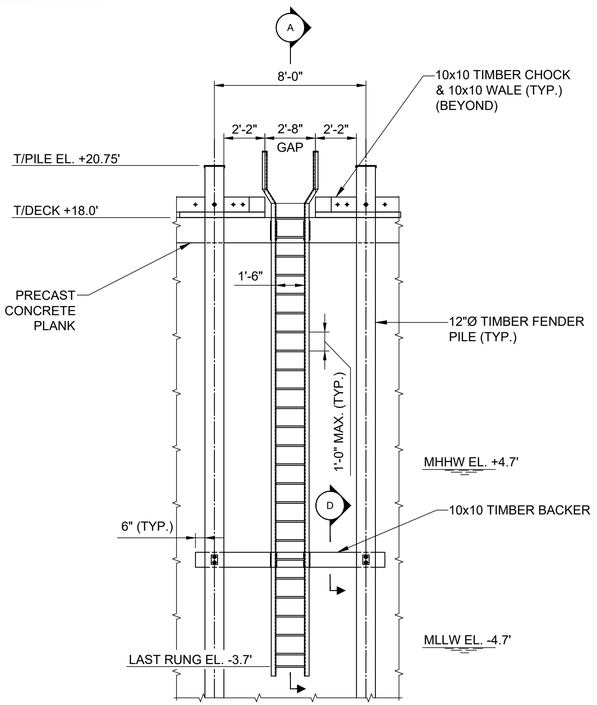

LADDER DETAIL

SCALE: 1/4" = 1'-0"

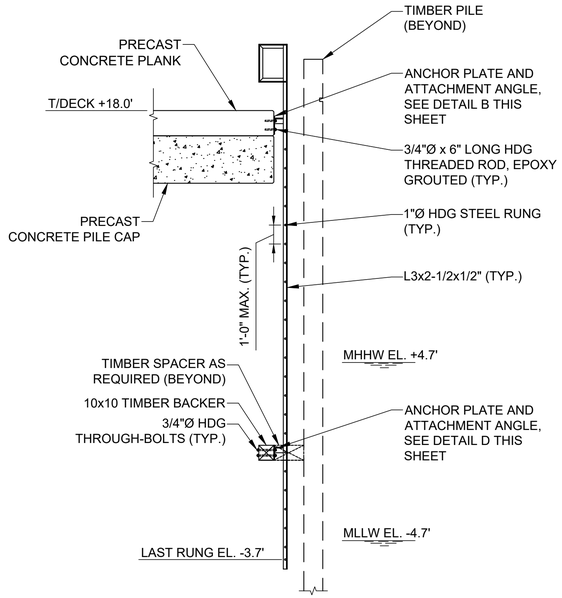

A LADDER SECTION

SCALE: 1/4" = 1'-0"

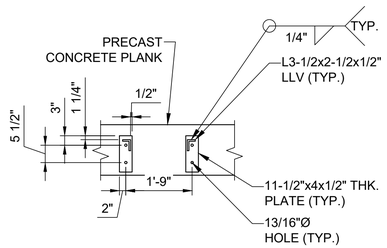

B LADDER CONNECTION (TOP)

SCALE: 1/2" = 1'-0"

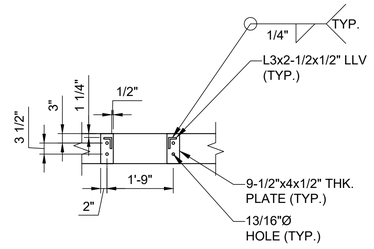

C LADDER CONNECTION (BOTTOM)

SCALE: 1/2" = 1'-0"

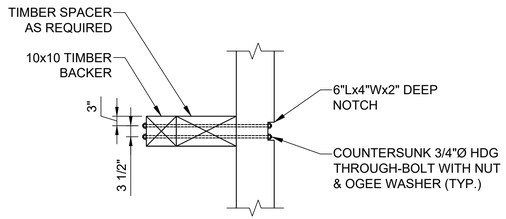

D TIMBER BACKER CONNECTION

SCALE: 1/2" = 1'-0"

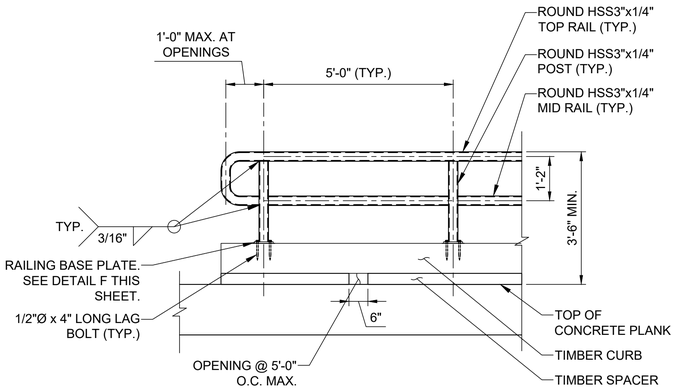

E RAILING SECTION

SCALE: 1/2" = 1'-0"

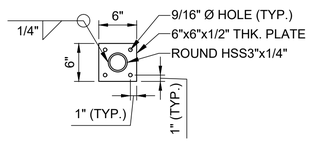

F RAILING BASEPLATE DETAIL

SCALE: 1" = 1'-0"

ELEVATION	MLLW	NAVD88*
BFE	+19.0	+14.0
HAT	+11.6	+6.6
MHHW	+9.7	+4.7
MHW	+9.3	+4.3
MSL	+4.8	-0.2
MLW	+0.3	-4.7
MLLW	0.0	-5.0

*PROJECT DATUM

FOR PERMIT

Attention:

0 1"

If this scale bar does not measure 1" then drawing is not original scale.

STATE OF MAINE
DANIEL J. BANNON
No. 13033
LICENSED PROFESSIONAL ENGINEER

06/10/2025

Designed:	DJB
Drawn:	JAM
Checked:	BJB
Approved:	BMM
P.E. No:	13033
GEI Project	2203703

GEI Consultants
GEI CONSULTANTS, INC.
5 MILK STREET
PORTLAND, ME 04101
(207)797-8901

UNE
UNIVERSITY OF NEW ENGLAND
11 HILLS BEACH RD.
BIDDEFORD, MAINE

UNIVERSITY OF NEW ENGLAND MARINE SCIENCE CENTER PIER
11 HILLS BEACH ROAD
BIDDEFORD, YORK COUNTY, MAINE

NO	DATE	ISSUE/REVISION	APP
8	6/5/2025	ADDRESS PB COMMENTS	DJB
7	4/16/2025	BIDDEFORD PERMIT APP.	DJB
6	9/17/2024	REVISED PERMIT SET	DJB
5	6/27/2024	REVISED PERMIT SET	DJB
4	9/14/2023	DEP PERMIT SET	DJB
3	6/28/2023	75% DESIGN SUBMISSION	DJB
2	2/15/2023	30% DESIGN SUBMISSION	DJB
1	12/9/2022	15% DESIGN SUB REV	DJB
0	11/11/2022	15% DESIGN SUBMISSION	DJB

SHEET NAME
MISCELLANEOUS DETAILS (2 OF 5)

SHEET NO.
S-010

DICASTELNUOVO, VINNIE \\bos1v-fs02\Data_Storage\Working\UNIVERSITY OF NEW ENGLAND\2203703 UNE Marine Science Center Pier\00_CAD\Design\Sheets\2203703-S-010.dwg - 6/6/2025

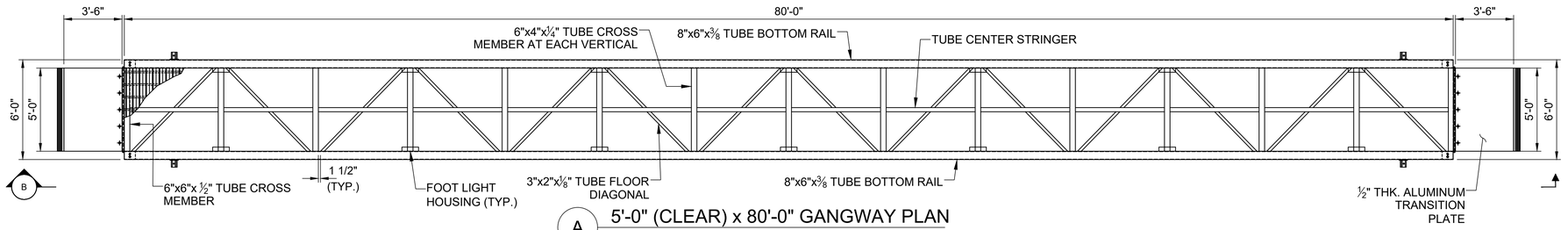

A 5'-0" (CLEAR) x 80'-0" GANGWAY PLAN

SCALE: 1/4" = 1'-0"

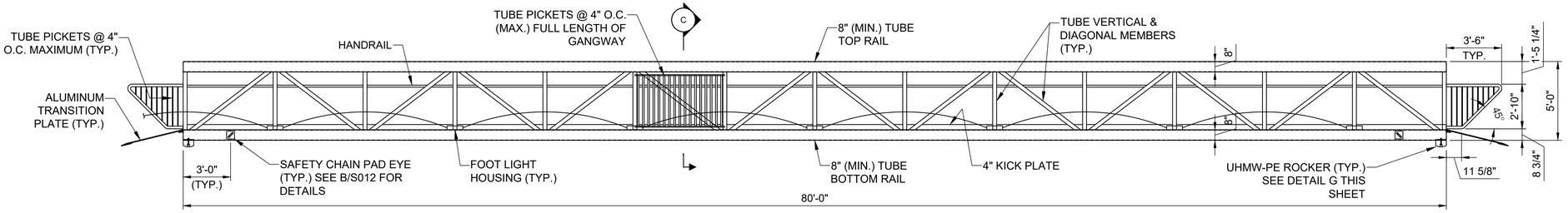

B GANGWAY ELEVATION

SCALE: 1/4" = 1'-0"

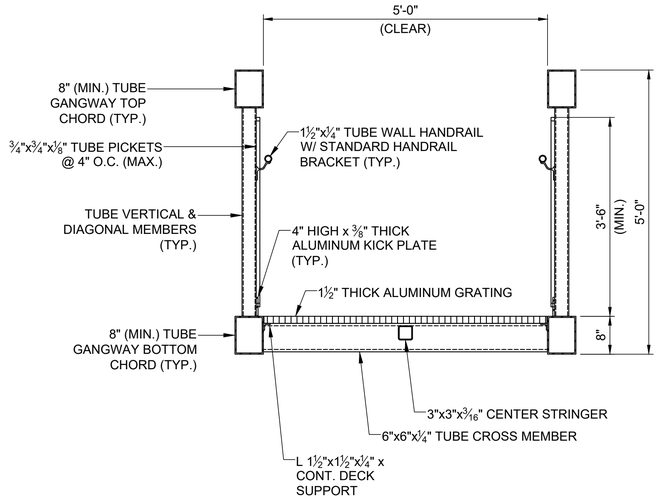

C TYPICAL GANGWAY SECTION

SCALE: 3/4" = 1'-0"

NOTE(S):
1. CONTRACTOR AND GANGWAY MANUFACTURER SHALL DETERMINE FINAL GANGWAY MEMBER SIZES AND SUBMIT TO ENGINEER FOR REVIEW AND APPROVAL.
2. ALUMINUM GRATING SHALL MEET ADA REQUIREMENTS.

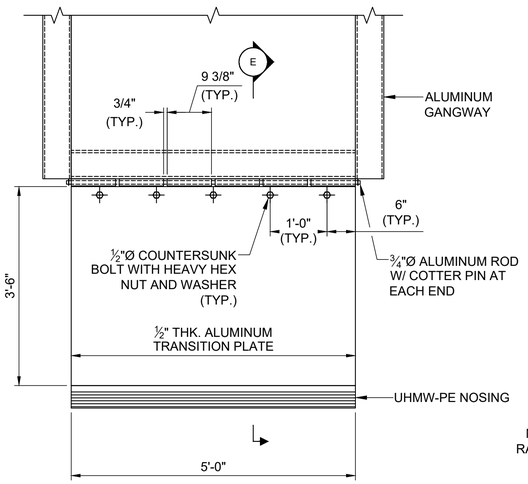

D TRANSITION PLATE DETAIL

SCALE: 3/4" = 1'-0"

NOTES:
1. CONTRACTOR SHALL DETERMINE FINAL GANGWAY MEMBER SIZES. MEMBERS ONLY SHOWN SCHEMATICALLY FOR REFERENCE.
2. CONTRACTOR SHALL SUBMIT FINAL GANGWAY SHOP DRAWINGS AND CALCULATION PACKAGE SIGNED AND SEALED BY A PROFESSIONAL ENGINEER LICENSED IN THE STATE OF MAINE.
3. ALL GANGWAY TUBE MEMBERS SHALL BE 6061-T6 ALUMINUM.
4. ALL GANGWAY TUBE MEMBERS SHALL BE CAPPED AND SEALED W/ ALUMINUM PLATES AT EXPOSED ENDS.

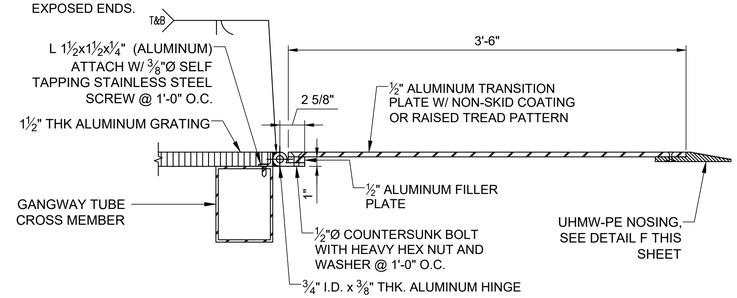

E GANGWAY TRANSITION PLATE SECTION

SCALE: 1-1/2" = 1'-0"

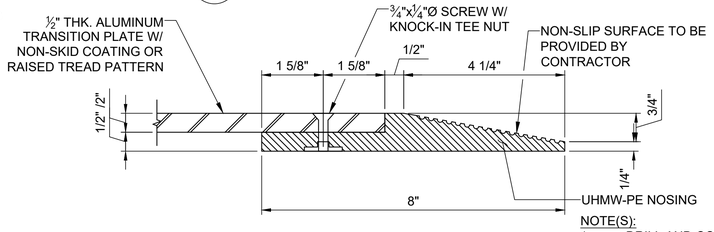

F UHMW-PE NOSING DETAIL

SCALE: 6" = 1'-0"

NOTE(S):
1. DRILL AND COUNTER BORE TRANSITION PLATES. COUNTERSINK HOLES FOR TEE NUTS TO TWICE BASE THICKNESS. SCREWS TO BE COUNTERSUNK INTO PLATE. INSTALL NEW SCREWS OVER SILICONE TO COVER EXPOSED ALUMINUM.
2. UHMW-PE NOSING DETAILS TO BE DETERMINED AFTER TRANSITION PLATE INSTALLATION AND SHALL BE IN COMPLIANCE WITH THE REQUIREMENTS SET FORTH IN ADA.

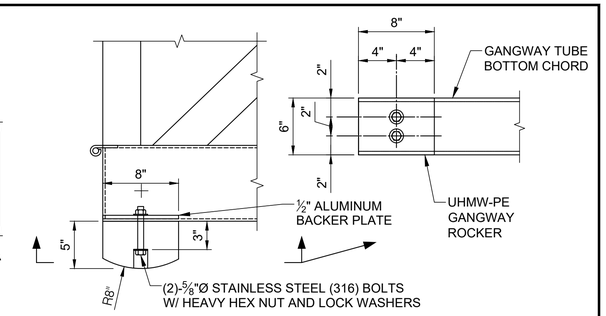

G GANGWAY ROCKER DETAIL

SCALE: 1-1/2" = 1'-0"

NOTES:
1. ROCKER MATERIAL SHALL BE VIRGIN UHMW-PE, BLACK IN COLOR.
2. ALUMINUM BACKER PLATE PLAN DIMENSIONS SHALL MATCH ROCKER PLAN DIMENSIONS.

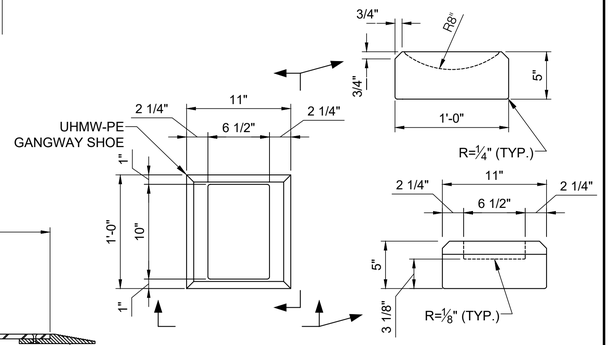

J GANGWAY SHOE DETAIL

SCALE: 1-1/2" = 1'-0"

NOTE: SHOE MATERIAL SHALL BE VIRGIN UHMW-PE, BLACK IN COLOR.

FOR PERMIT

ELEVATION	MLLW	NAVD88*
BFE	+19.0	+14.0
HAT	+11.6	+6.6
MHHW	+9.7	+4.7
MHW	+9.3	+4.3
MSL	+4.8	-0.2
MLW	+0.3	-4.7
MLLW	0.0	-5.0

*PROJECT DATUM

Attention:

0 1"

If this scale bar does not measure 1" then drawing is not original scale.

STATE OF MAINE — DANIEL J. BANNON No. 13033 — PROFESSIONAL ENGINEER — LICENSED

06/10/2025

Designed:	DJB
Drawn:	JAM
Checked:	BJB
Approved:	BMM
P.E. No:	13033
GEI Project	2203703

GEI Consultants
GEI CONSULTANTS, INC.
5 MILK STREET
PORTLAND, ME 04101
(207)797-8901

UNE
UNIVERSITY OF NEW ENGLAND
11 HILLS BEACH RD.
BIDDEFORD, MAINE

UNIVERSITY OF NEW ENGLAND MARINE SCIENCE CENTER PIER
11 HILLS BEACH ROAD
BIDDEFORD, YORK COUNTY, MAINE

NO	DATE	ISSUE/REVISION	APP
8	6/5/2025	ADDRESS PB COMMENTS	DJB
7	4/16/2025	BIDDEFORD PERMIT APP.	DJB
6	9/17/2024	REVISED PERMIT SET	DJB
5	6/27/2024	REVISED PERMIT SET	DJB
4	9/14/2023	DEP PERMIT SET	DJB
3	6/28/2023	75% DESIGN SUBMISSION	DJB
2	2/15/2023	30% DESIGN SUBMISSION	DJB
1	12/9/2022	15% DESIGN SUB REV	DJB
0	11/11/2022	15% DESIGN SUBMISSION	DJB

SHEET NAME: **MISCELLANEOUS DETAILS (3 OF 5)**

SHEET NO.: **S-011**

DICASTELNUOVO, VINNIE \\bos1v-fs02\Data_Storage\Working\UNIVERSITY OF NEW ENGLAND\2203703 UNE Marine Science Center Pier\00_CAD\Design\Sheets\2203703-S-011.dwg - 6/6/2025

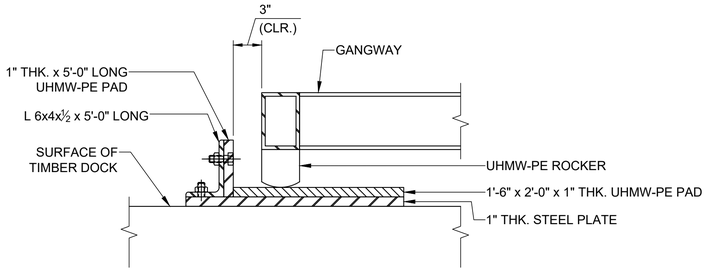

A GANGWAY LANDING AT DOCKS
SCALE: 1-1/2" = 1'-0"

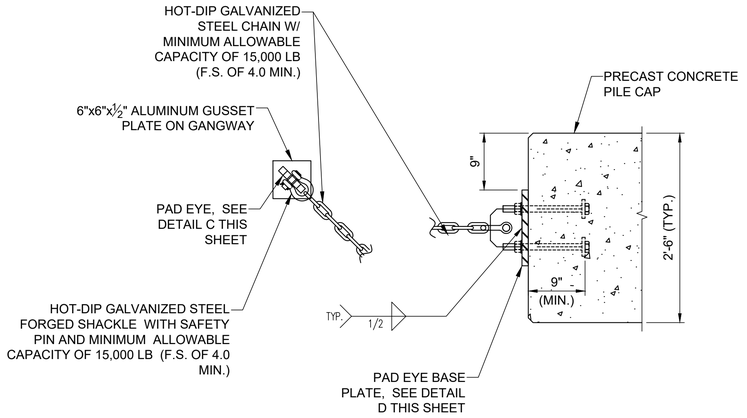

B SAFETY CHAIN ASSEMBLY
SCALE: 1" = 1'-0"

NOTE: CONTRACTOR TO DETERMINE ASSEMBLY LENGTH BASED ON PAD EYE LOCATION ON GANGWAY SUCH THAT UHMW-PE SHOE CANNOT MOVE OFF THE SUPPORTING PLATE.

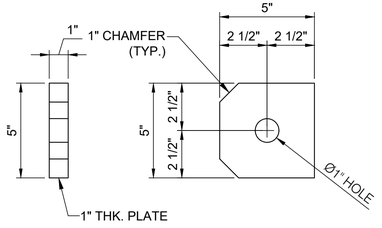

C PAD EYE DETAIL
SCALE: 3" = 1'-0"

NOTE: PAD EYE ON GANGWAY SHALL BE ALUMINUM.
PAD EYE ON PILE CAP SHALL BE HDG STEEL.

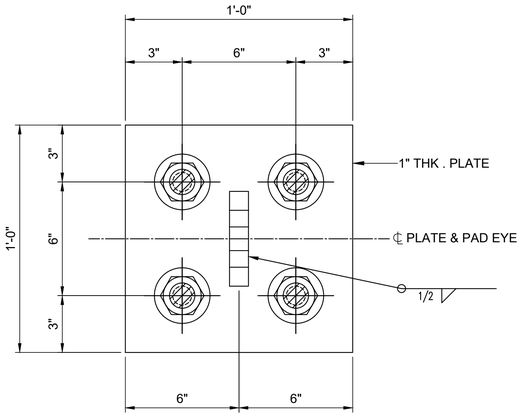

D PAD EYE BASE PLATE DETAIL
SCALE: 3" = 1'-0"

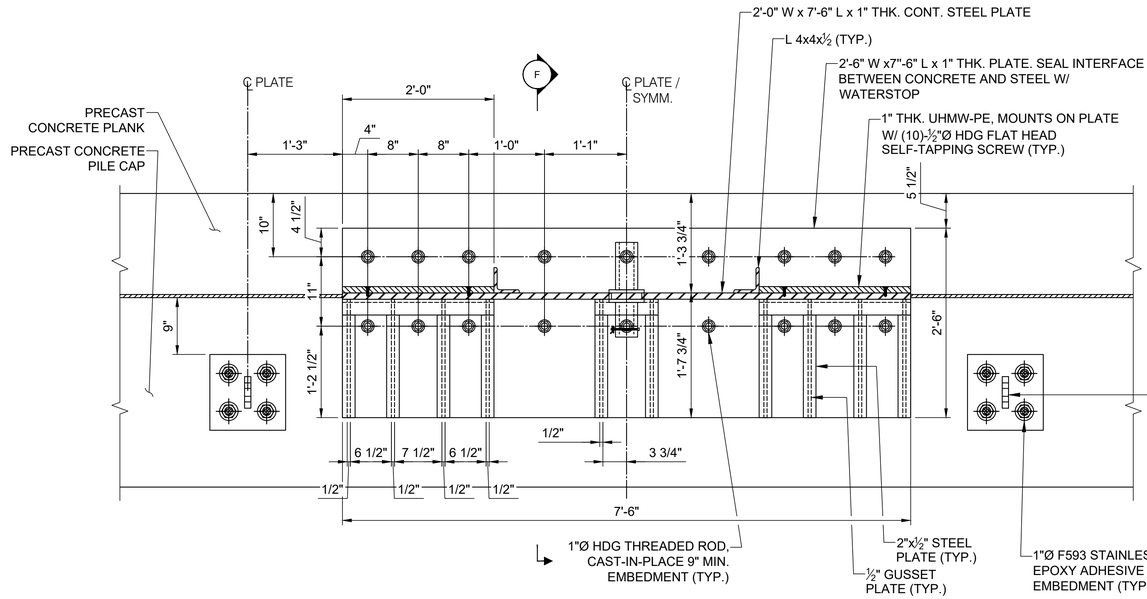

E FIFTH WHEEL ASSEMBLY - ELEVATION
SCALE: 1" = 1'-0"

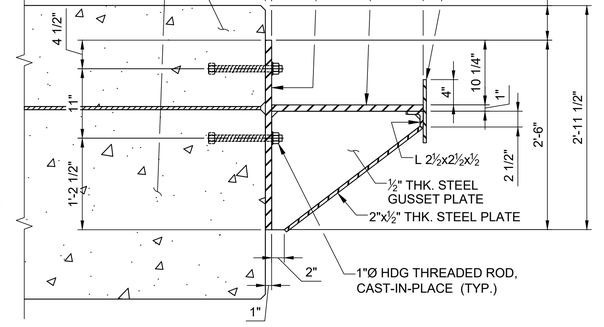

F FIFTH WHEEL ASSEMBLY - TYPICAL SECTION
SCALE: 1" = 1'-0"

ELEVATION	MLLW	NAVD88*
BFE	+19.0	+14.0
HAT	+11.6	+6.6
MHHW	+9.7	+4.7
MHW	+9.3	+4.3
MSL	+4.8	-0.2
MLW	+0.3	-4.7
MLLW	0.0	-5.0

*PROJECT DATUM

FOR PERMIT

Attention:
0 1"
If this scale bar does not measure 1" then drawing is not original scale.

STATE OF MAINE
DANIEL J. BANNON
No. 13033
LICENSED PROFESSIONAL ENGINEER
06/10/2025

Designed:	DJB
Drawn:	JAM
Checked:	BJB
Approved:	BMM
P.E. No:	13033
GEI Project	2203703

GEI Consultants
GEI CONSULTANTS, INC.
5 MILK STREET
PORTLAND, ME 04101
(207)797-8901

UNE
UNIVERSITY OF NEW ENGLAND
11 HILLS BEACH RD.
BIDDEFORD, MAINE

UNIVERSITY OF NEW ENGLAND MARINE SCIENCE CENTER PIER
11 HILLS BEACH ROAD
BIDDEFORD, YORK COUNTY, MAINE

NO	DATE	ISSUE/REVISION	APP
8	6/5/2025	ADDRESS PB COMMENTS	DJB
7	4/16/2025	BIDDEFORD PERMIT APP.	DJB
6	9/17/2024	REVISED PERMIT SET	DJB
5	6/27/2024	REVISED PERMIT SET	DJB
4	9/14/2023	DEP PERMIT SET	DJB
3	6/28/2023	75% DESIGN SUBMISSION	DJB
2	2/15/2023	30% DESIGN SUBMISSION	DJB
1	12/9/2022	15% DESIGN SUB REV	DJB
0	11/11/2022	15% DESIGN SUBMISSION	DJB

SHEET NAME
MISCELLANEOUS DETAILS (4 OF 5)

SHEET NO.
S-012

DICASTELNUOVO, VINNIE \\bos1v-fs02\Data_Storage\Working\UNIVERSITY OF NEW ENGLAND\2203703 UNE Marine Science Center Pier\00_CAD\Design\Sheets\2203703-S-012.dwg - 6/6/2025

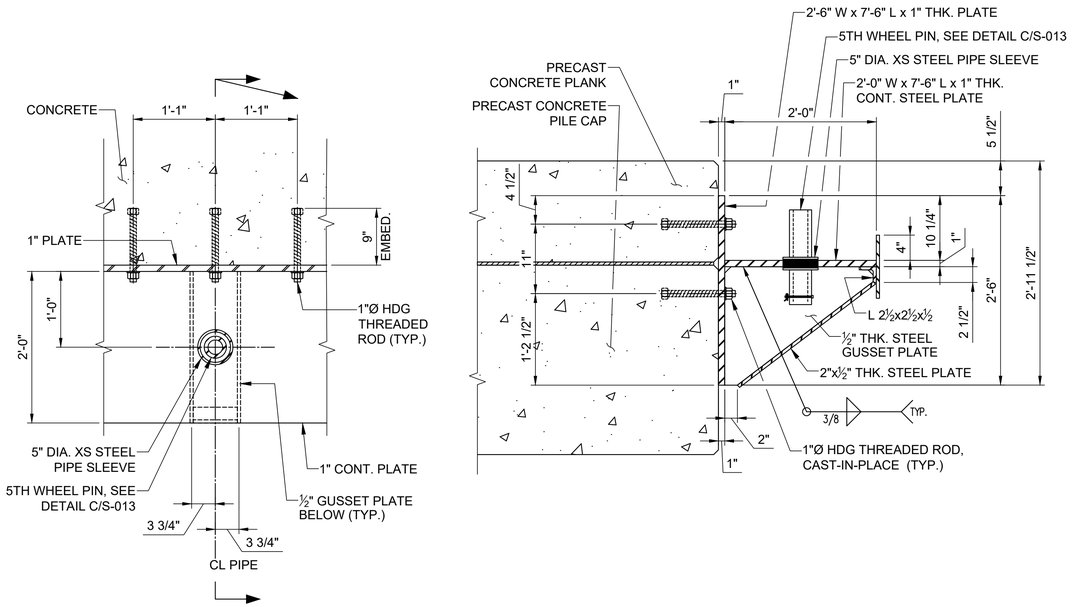

A TYPICAL 5TH WHEEL PLAN AND SECTION

SCALE: 1" = 1'-0"

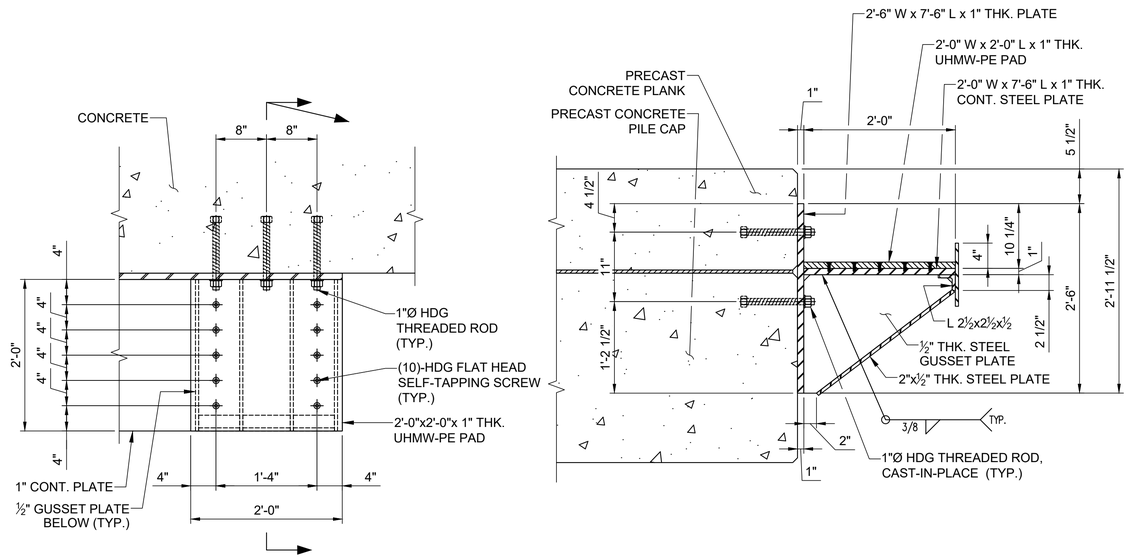

B TYPICAL UHMW-PE PAD DETAIL

SCALE: 1" = 1'-0"

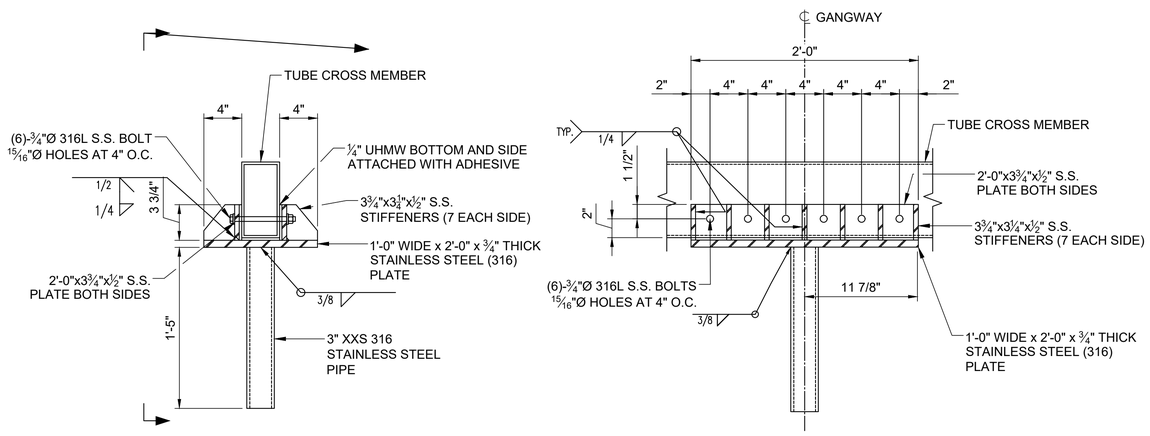

C 5TH WHEEL PIN DETAIL

SCALE: 1-1/2" = 1'-0"

ELEVATION	MLLW	NAVD88*
BFE	+19.0	+14.0
HAT	+11.6	+6.6
MHHW	+9.7	+4.7
MHW	+9.3	+4.3
MSL	+4.8	-0.2
MLW	+0.3	-4.7
MLLW	0.0	-5.0

*PROJECT DATUM

FOR PERMIT

Attention:

0 1"

If this scale bar does not measure 1" then drawing is not original scale.

STATE OF MAINE — DANIEL J. BANNON No. 13033 — LICENSED PROFESSIONAL ENGINEER

06/10/2025

Designed:	DJB
Drawn:	JAM
Checked:	BJB
Approved:	BMM
P.E. No:	13033
GEI Project	2203703

GEI Consultants
GEI CONSULTANTS, INC.
5 MILK STREET
PORTLAND, ME 04101
(207)797-8901

UNE
UNIVERSITY OF NEW ENGLAND

11 HILLS BEACH RD.
BIDDEFORD, MAINE

UNIVERSITY OF NEW ENGLAND MARINE SCIENCE CENTER PIER

11 HILLS BEACH ROAD
BIDDEFORD, YORK COUNTY, MAINE

NO	DATE	ISSUE/REVISION	APP
8	6/5/2025	ADDRESS PB COMMENTS	DJB
7	4/16/2025	BIDDEFORD PERMIT APP.	DJB
6	9/17/2024	REVISED PERMIT SET	DJB
5	6/27/2024	REVISED PERMIT SET	DJB
4	9/14/2023	DEP PERMIT SET	DJB
3	6/28/2023	75% DESIGN SUBMISSION	DJB
2	2/15/2023	30% DESIGN SUBMISSION	DJB
1	12/9/2022	15% DESIGN SUB REV	DJB
0	11/11/2022	15% DESIGN SUBMISSION	DJB

SHEET NAME

MISCELLANEOUS DETAILS (5 OF 5)

SHEET NO.

S-013

DICASTELNUOVO, VINNIE \\bos1v-fs02\Data_Storage\Working\UNIVERSITY OF NEW ENGLAND\2203703.UNE Marine Science Center Pier\00_CAD\Design\Sheets\2203703-S-013.dwg - 6/6/2025

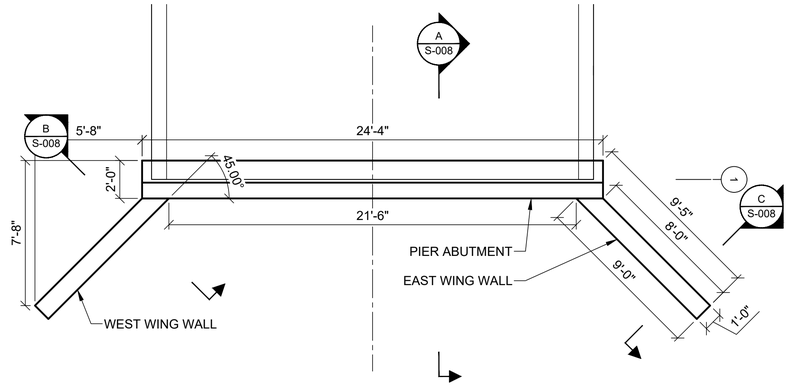

ABUTMENT PLAN
SCALE: SCALE: 3" = 1'-0"

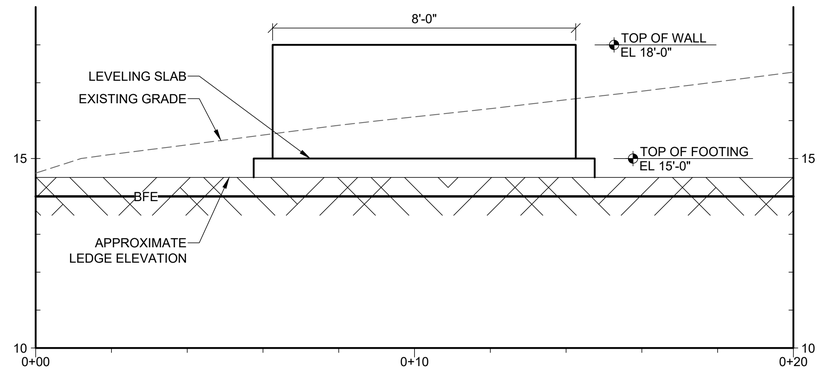

WEST WING WALL ELEVATION
SCALE: 6" = 1'-0"

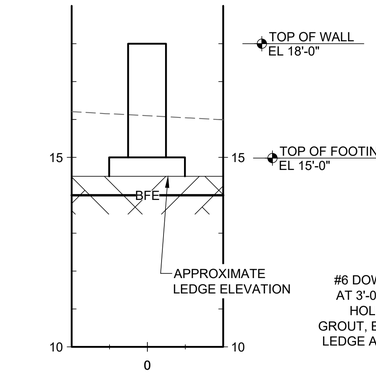

B WEST WING WALL SECTION
SCALE: 6" = 1'-0"

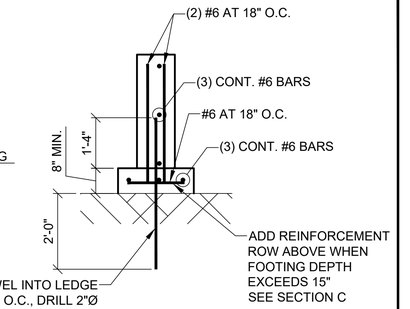

B SECTION
WEST WING WALL REINFORCEMENT
SCALE: 6" = 1'-0"

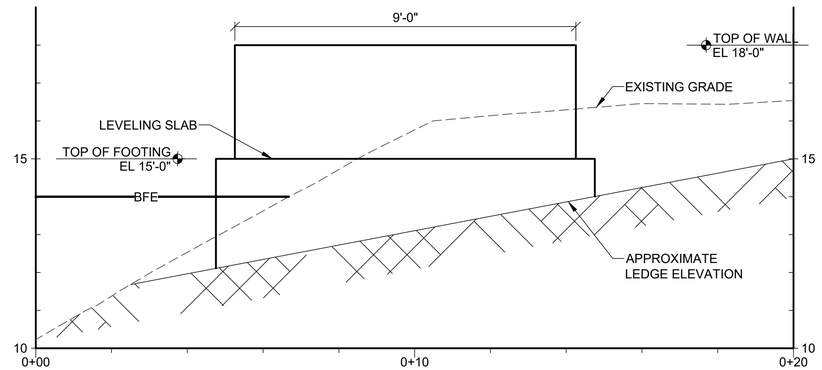

EAST WING WALL ELEVATION
SCALE: 6" = 1'-0"

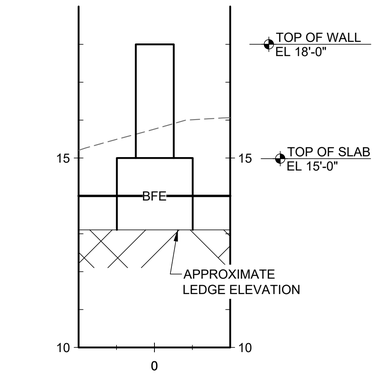

C EAST WING WALL SECTION
SCALE: 6" = 1'-0"

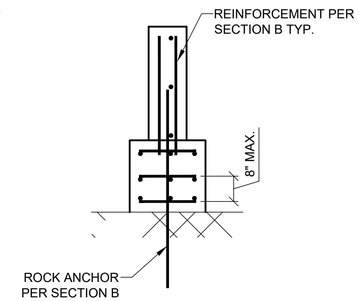

C SECTION
EAST WING WALL REINFORCEMENT
SCALE: 6" = 1'-0"

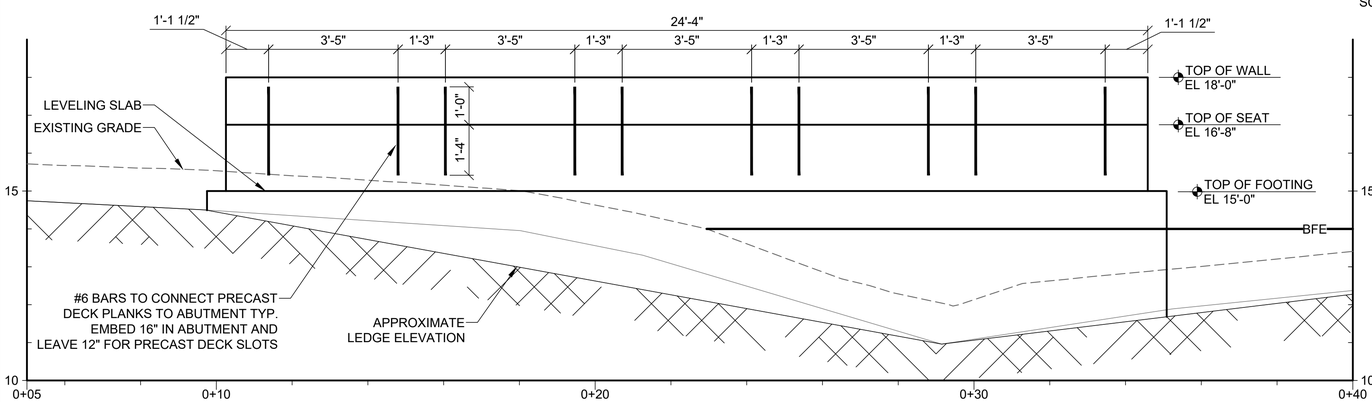

ABUTMENT ELEVATION A
SCALE: 3" = 1'-0"

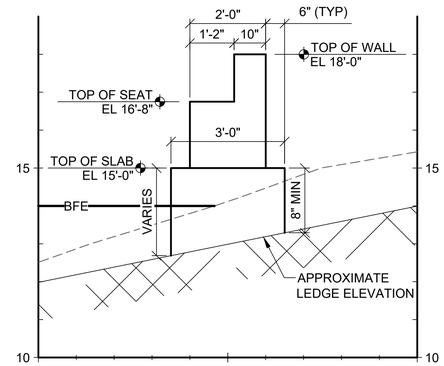

A ABUTMENT SECTION
SCALE: 6" = 1'-0"

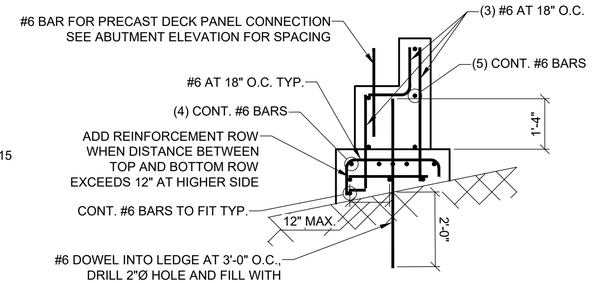

A SECTION
ABUTMENT REINFORCEMENT
SCALE: 6" = 1'-0"

FOR PERMIT

ELEVATION	MLLW	NAVD88*
BFE	+19.0	+14.0
HAT	+11.6	+6.6
MHHW	+9.7	+4.7
MHW	+9.3	+4.3
MSL	+4.8	-0.2
MLW	+0.3	-4.7
MLLW	0.0	-5.0

*PROJECT DATUM

Attention:
0 1"
If this scale bar does not measure 1" then drawing is not original scale.

STATE OF MAINE
DANIEL J. BANNON
No. 13033
LICENSED PROFESSIONAL ENGINEER
06/10/2025

Designed:	DJB
Drawn:	JAM
Checked:	BJB
Approved:	BMM
P.E. No:	13033
GEI Project	2203703

GEI Consultants
GEI CONSULTANTS, INC.
5 MILK STREET
PORTLAND, ME 04101
(207)797-8901

UNIVERSITY OF NEW ENGLAND
11 HILLS BEACH RD.
BIDDEFORD, MAINE

UNIVERSITY OF NEW ENGLAND MARINE SCIENCE CENTER PIER
11 HILLS BEACH ROAD
BIDDEFORD, YORK COUNTY, MAINE

NO	DATE	ISSUE/REVISION	APP
8	6/5/2025	ADDRESS PB COMMENTS	DJB
7	4/16/2025	BIDDEFORD PERMIT APP.	DJB
6	9/17/2024	REVISED PERMIT SET	DJB
5	6/27/2024	REVISED PERMIT SET	DJB
4	9/14/2023	DEP PERMIT SET	DJB
3	6/28/2023	75% DESIGN SUBMISSION	DJB
2	2/15/2023	30% DESIGN SUBMISSION	DJB
1	12/9/2022	15% DESIGN SUB REV	DJB
0	11/11/2022	15% DESIGN SUBMISSION	DJB

SHEET NAME: **ABUTMENT DETAILS**

SHEET NO.: **S-014**

DJCASTELNUOVO, VINNIE \\bost1-fs02\Data_Storage\Working\UNIVERSITY OF NEW ENGLAND\2203703 UNE Marine Science Center Pier\00_CAD\Design\Sheets\2203703-S-014.dwg - 6/6/2025

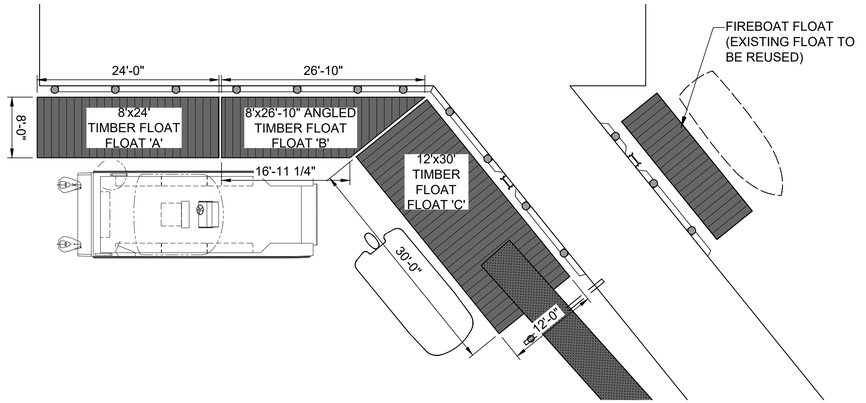

1 PLAN
FLOAT LAYOUT SCALE: 1" = 10'

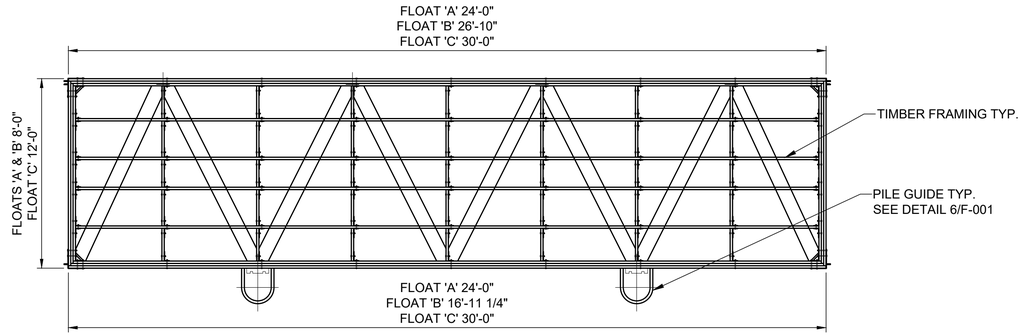

NOTES:
1. CONTRACTOR/FABRICATOR TO DETERMINE ACTUAL MEMBER SIZES PER LOADING REQUIREMENTS.

2 PLAN
TYP. FLOATING DOCK SCALE: 1" = 4'

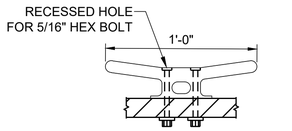

CLEAT LAYOUT:
FLOAT 'A' (4) @ EQ. SP ON SOUTH FACE
FLOAT 'B' (3) @ EQ. SP ON SOUTH FACE
FLOAT 'C' (4) @ EQ. SP ON WEST FACE

4 DETAIL
12" CLEAT SCALE: 2:1

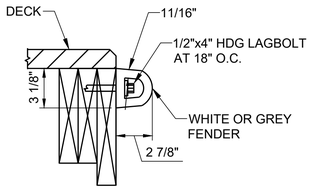

5 DETAIL
DOCK FENDER SCALE: 2:1

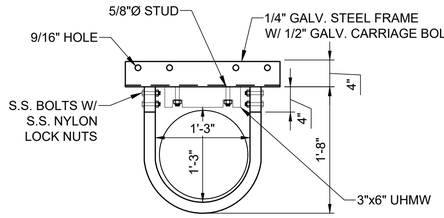

PILE GUIDE LAYOUT:
PROVIDE PILE GUIDES AT ALL TIMBER PILE LOCATIONS
FLOAT 'A' (3) REQ
FLOAT 'B' (4) REQ
FLOAT 'C' (4) REQ

6 DETAIL
PILE GUIDE SCALE: 1:1

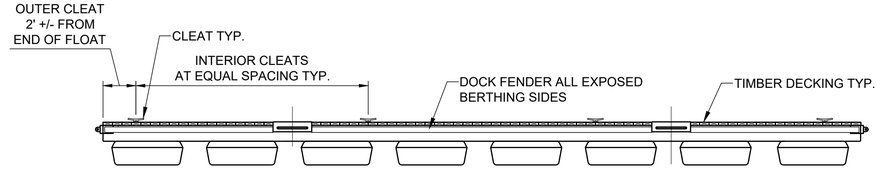

NOTES:
1. FLOTATION UNITS SHOWN ARE FOR GRAPHIC REPRESENTATION ONLY, CONTRACTOR/MANUFACTURER SHALL DETERMINE SIZE AND QUANTITY PER LOADING REQUIREMENTS.

3 ELEVATION
TYP. FLOATING DOCK SCALE: 1" = 4'

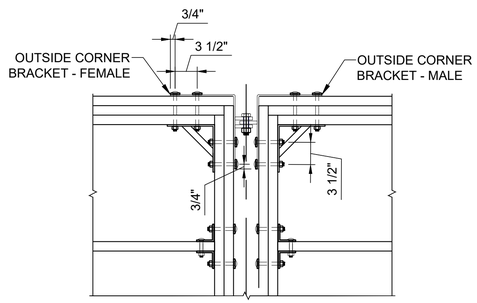

7 DETAIL
FLOAT CONNECTION SCALE: 1:1

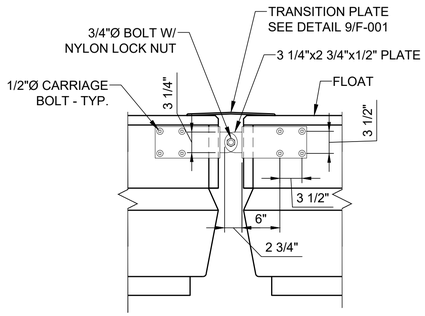

8 SECTION
FLOAT CONNECTION SCALE: 1:1

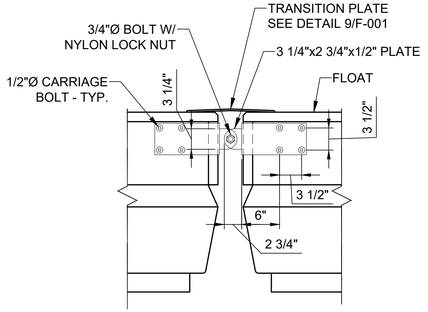

9 DETAIL
TRANSITION PLATE SCALE: 1:1

0 10 20
SCALE, FEET

0 1 2 4
SCALE, FEET

0 40 80
SCALE, FEET

ELEVATION	MLLW	NAVD88*
BFE	+19.0	+14.0
HAT	+11.6	+6.6
MHHW	+9.7	+4.7
MHW	+9.3	+4.3
MSL	+4.8	-0.2
MLW	+0.3	-4.7
MLLW	0.0	-5.0

*PROJECT DATUM

FOR PERMIT

Attention:
0 1"
If this scale bar does not measure 1" then drawing is not original scale.

STATE OF MAINE
DANIEL J. BANNON
No. 13033
LICENSED PROFESSIONAL ENGINEER
06/10/2025

Designed:	DJB
Drawn:	JAM
Checked:	BJB
Approved:	BMM
P.E. No:	13033
GEI Project	2203703

GEI Consultants
GEI CONSULTANTS, INC.
5 MILK STREET
PORTLAND, ME 04101
(207)797-8901

UNIVERSITY OF NEW ENGLAND
11 HILLS BEACH RD.
BIDDEFORD, MAINE

UNIVERSITY OF NEW ENGLAND MARINE SCIENCE CENTER PIER
11 HILLS BEACH ROAD
BIDDEFORD, YORK COUNTY, MAINE

NO	DATE	ISSUE/REVISION	APP
8	6/5/2025	ADDRESS PB COMMENTS	DJB
7	4/16/2025	BIDDEFORD PERMIT APP.	DJB
6	9/17/2024	REVISED PERMIT SET	DJB
5	6/27/2024	REVISED PERMIT SET	DJB
4	9/14/2023	DEP PERMIT SET	DJB
3	6/28/2023	75% DESIGN SUBMISSION	DJB
2	2/15/2023	30% DESIGN SUBMISSION	DJB
1	12/9/2022	15% DESIGN SUB REV	DJB
0	11/11/2022	15% DESIGN SUBMISSION	DJB

SHEET NAME
FLOAT PLAN AND DETAILS

SHEET NO.
F-001

DJCASTELNUOVO, VINNIE - \\geiconsultants.com\data\Data_Storage\Working\UNIVERSITY OF NEW ENGLAND\2203703 UNE Marine Science Center Pier\00_CAD\Design\Sheets\2203703-F-001.dwg - 6/6/2025

Whitten, Nan

From: Norm Labbe <norm.labbe@gmail.com>
Sent: Thursday, June 12, 2025 11:01 AM
To: Whitten, Nan; Galbraith, David; Plotkin, Alexa; Patoine, Larry; Dubois, Matthew; Lewis, Kayla; Beaudette, Stephen; susan.deschambault@gmail.com; Angers, Roch
Subject: Planning Board site visit to UNE on 6-9-25

Caution: This is an external email. Please take care when clicking links or opening attachments. When in doubt, contact the IT Department

Dear Planning Board,

Thank you for the opportunity to attend the Planning Board's June 9th site visit of UNE's proposed pier location. As stated by the Board at the beginning of the tour, the public was to refrain from commenting to or asking UNE representatives any questions and to submit them in writing to the Board within a few days, in order for the Board to get them to UNE to answer at the upcoming Board meeting on the 18th. Accordingly, the following are observations and questions that came to mind during the site walk.

1. During the site walk UNE stated it was very concerned about minimizing environmental impacts, in particular those relating to the access road (e.g., minimizing width of impact by proposing to cut into bedrock vertically rather than at a slope, etc.). It became obvious while walking to UNE's proposed Pier location 7 that Pier location 8 (which is in the general area of the Harbormasters' recommended location) is a couple hundred feet closer to the beginning of the proposed access road. Wouldn't this result in location 8 requiring considerably less access road – and less environmental impact and less cost – than would location 7? A simple yes or no answer would be appreciated.

2. UNE's proposed $3 + million pier will apparently be paid for in large part by our tax dollars. As such, did UNE consider other potential beneficial uses for the pier? How about the ability to accommodate larger - deeper draft - boats? It appears that the largest boat being considered is the University of New Hampshire's Gulf Challenger, which has a draft of 5 feet (which is potentially problematic given location 7's approximate 6 foot depth at mean low tide). Being that the city of Biddeford has no deep water pier with ocean access, wouldn't the community benefit from the ability to accommodate other ships for things such as emergency response, civil defense or maybe even special events to celebrate the City's nautical heritage? More specific questions on this topic are: Will UNE's Gulf Challenger be able to safely tie up to the proposed pier at a lower than normal (-1.5 ft.) tide? Also, did UNE seriously consider the ability to accommodate boats with more than a five foot draft? A yes or no answer to both of these specific questions would be appreciated.

Thank you for the opportunity to present these observations and questions. I look forward to UNE's responses at your upcoming meeting on January 18. More importantly, I appreciate the Planning Board's insistence on transparency, and the need for the application you are reviewing to be fully documented.

Sincerely,

Norm Labbe
8 Eagle Rock Point
207-229-6324

Whitten, Nan

From: Andrea Delorge <andreacdelorge@gmail.com>
Sent: Thursday, June 12, 2025 11:11 AM
To: Planning Board; Whitten, Nan; Galbraith, David
Subject: a question for UNE to answer next week

Caution: This is an external email. Please take care when clicking links or opening attachments. When in doubt, contact the IT Department

I read in the Biddeford Gazette that the mooring owners where UNE wants to build their pier have said that they won't move. To me that seems like an obstacle that the university cannot overcome, unless somebody sues somebody. How can the Planning Board approve their application if somebody else is already there?

At next week's meeting I'd like UNE to explain what's going to happen. An answer that they'll persuade the mooring owners to move, and pay for it, is not good enough. Please have UNE explain --- in detail --- what steps they will take to free up that location for building a pier, given what they know now, that the mooring owners won't move.

Thank you for your continued work on this complex project. You are helping the community.

ANDREA

Whitten, Nan

From: Laura Anderson <laurainbuxton@gmail.com>
Sent: Wednesday, June 11, 2025 12:43 PM
To: Plotkin, Alexa; Patoine, Larry; Dubois, Matthew; Lewis, Kayla; Beaudette, Stephen; susan.deschambault@gmail.com; Deschambault, Susan; Planning Board
Subject: Really bad legal advice

Caution: This is an external email. Please take care when clicking links or opening attachments. When in doubt, contact the IT Department

The City will be sued immediately if UNE's pier application is approved under the current set of "facts." TEC Associates is a not a certified Harbormaster in the State of Maine. All you have to do is be in touch with the Maine Harbor Masters Association to find the truth.

I was at the planning board meeting a couple weeks ago when the lawyer told you that a Harbormaster working for Biddeford has approved UNE's application. I saw your planner nodding along in agreement. That's simply not true. The city's own website says about TEC Associates, "The firm will not be selecting or commenting on the site of the pier." How embarrassing.

It's too bad that the planning board has been so poorly advised by the professionals that are supposed to be helping you. Hopefully board members themselves can insist that the truth be established and the record corrected.

Laura Anderson

Whitten, Nan

From: Hills Beach John <hillsbeachjohn@yahoo.com>
Sent: Wednesday, June 11, 2025 8:28 AM
To: Plotkin, Alexa; Patoine, Larry; Dubois, Matthew; Lewis, Kayla; Beaudette, Stephen; susan.deschambault@gmail.com; Deschambault, Susan
Cc: Whitten, Nan; Galbraith, David; Randy Seaver; newsdesk@sacobaynews.com; srichelieu@metln.org; ggraham@pressherald.com; Planning Board
Subject: Transparency at the 6/18 Planning Board meeting

Caution: This is an external email. Please take care when clicking links or opening attachments. When in doubt, contact the IT Department

Dear Biddeford Planning Board,

By next week's Planning Board meeting, UNE will have had a full month to supply documentation missing from their application, and to address concerns raised by Planning Board members and the public.

1. Mr. Patoine asked to see a copy of the application that UNE filed with NIST.

2. Mr. Dubois requested evidence that UNE provided Maine's Native American Tribes with final pier design and proper notice.

3. The public requests evidence of an Agreement between the City and UNE that justifies the need for pier design to include a fireboat.

4. The public asks why UNE's existing classroom space at the university is insufficient, and why a classroom intruding onto the river is necessary.

5. The public requests documentation that a directive by U.S. Army Corps engineer Heather Stukas was honored. She wrote in 2024 that the Corps must "follow-up with the Biddeford Harbormaster to ensure the new concept is acceptable."

6. The public requests documentation that Wayne Duffett, P.E., president of TEC Associates, approved the location and design of UNE's proposed pier, as claimed by the City Attorney.

7. The public asks for documentation as to when the City of Biddeford formally appointed Wayne Duffett, P.E. as Harbormaster.

8. The public requests documentation that Wayne Duffett, P.E. is a Harbormaster, or is currently training to be certified as a Harbormaster, as specifically mandated by Maine Title 38, Section 1-A.

9. Mooring holders have been clear that they are not moving from the spot in which UNE wants to build a pier. Therefore, the university is inappropriately asking the Planning Board to approve an application at a location that is unavailable. The public requests that during the approaching June 18,

2025 meeting, the Board thoroughly question UNE representatives about their plan to forcibly expel current mooring holders from their locations on the river. The public has a right to know what legal steps UNE will be taking, and when those legal actions will begin.

Once again, we thank the Board for their clear statements about mission, ethics, transparency, and the need for documentation to be complete. The Biddeford Planning Board is the only regulatory agency that has honorably encouraged transparency and public input.

JS

John Schafer

Former Chair, Biddeford Harbor Commission
Hills Beach, Biddeford

Whitten, Nan

From: kbuechs@earthlink.net
Sent: Wednesday, June 11, 2025 10:10 AM
To: Hills Beach John; Plotkin, Alexa; Patoine, Larry; Dubois, Matthew; Lewis, Kayla; Beaudette, Stephen; susan.deschambault@gmail.com; Deschambault, Susan
Cc: Whitten, Nan; Galbraith, David; Randy Seaver; newsdesk@sacobaynews.com; srichelieu@metln.org; ggraham@pressherald.com; Planning Board
Subject: Additional comments/questions for 6/18 Planning Board meeting

Caution: This is an external email. Please take care when clicking links or opening attachments. When in doubt, contact the IT Department

Nan, et al:Please insure this email has gotten to to the right channels and add my comments and questions to the package for next week's Planning Board agenda:1. Given that the Saco River, especially with regard to the location of the pier proposal, is the dividing property line between Saco and Biddeford, **why isn't Saco, as an "abutter," part of the approval process?** More specifically, why isn't the Saco Harbor Master and the Saco Planning Board part of the review process? I have read that this proposal was, at one time on the Saco Planning Board agenda and was unexplicitly removed prior to their meeting. **Note:** when the original Factory Island project was proposed in Saco, our City Manager and the Biddeford Conservation Commission both added written comments to the Saco Planning Board reviews.2. The Saco River Corridor Commission has apparently approved the proposal. Biddeford has two approved representative positions, primary and alternate, on the SRCC. Biddeford did not cast their vote! When I asked why, the Mayor said he was asked by the primary representative if he should be recused because his wife is employed by UNE and they agreed he should recuse himself. Biddeford has no alternate. The Mayor added that he has not appointed an alternate and was having difficulty finding someone to accept that position. **So, ironically, Biddeford did not even vote on this very important proposal.**3. If approved by the Biddeford Planning Board, may their decision be challenged through an appeal before the Biddeford Zoning Board (ZBA)?Kenneth BuechsWard 1282-3954

Whitten, Nan

From: Geoffrey Bove <geoffreybove@gmail.com>
Sent: Monday, June 9, 2025 9:34 AM
To: Whitten, Nan
Cc: Galbraith, David
Subject: Re: Sorry to ask...

Caution: This is an external email. Please take care when clicking links or opening attachments. When in doubt, contact the IT Department

Thank you Nan. I have made a comment to this effect on "UNE Pier Review." I hope that it goes well. Geoff

On Mon, Jun 9, 2025 at 9:20 AM Whitten, Nan <Nan.Whitten@biddefordmaine.org> wrote:

> ***Good Morning Geoff***
>
> ***This evening's site walk is more like a workshop for our Planning Board. The public is welcome to attend but only to listen, in a workshop we cannot take questions or comments from the public.***
>
> ***David Galbraith, the Planner, will go over this code of conduct at the beginning of the meeting and we hope all will respect that.***
>
> ***Thank you for reaching out.***
>
> ***Please let us know if you have any questions.***
>
> ***Nan.***

From: Geoffrey Bove <geoffreybove@gmail.com>
Sent: Monday, June 9, 2025 5:54 AM
To: Whitten, Nan <Nan.Whitten@Biddefordmaine.org>
Subject: Sorry to ask…

Caution: This is an external email. Please take care when clicking links or opening attachments. When in doubt, contact the IT Department

Hi,

I seem to have some moderating influence on issues like the current UNE one by helping people stick to facts. For today's site visit, it seems by some publicity that this will be somewhat of a public forum. My question is- will members of the public be allowed to ask questions to UNE or Planning Board members? If not, I'll respond to the FaceBook posts about this.

Even better, is there a written "code of conduct" for this sort of meeting? I could post that.

I think that it has potential to turn into a circus. I'm very unlikely to attend

Thank you!

Geoff

Geoffrey Bove, DC PhD
dba Bove Consulting
27 Nettie Lane
Kennebunkport ME 04046
207 590 8949

Whitten, Nan

From:	Hills Beach John <hillsbeachjohn@yahoo.com>
Sent:	Thursday, June 5, 2025 8:30 AM
To:	Planning Board
Cc:	Whitten, Nan; Galbraith, David; Randy Seaver; srichelieu@metln.org; dmendros@metln.org; ggraham@pressherald.com; newsdesk@sacobaynews.com
Subject:	Important clarification before Monday's site walk

Caution: This is an external email. Please take care when clicking links or opening attachments. When in doubt, contact the IT Department

Dear Planning Board,

Since City Hall is closed tomorrow, and the site survey at UNE is on Monday, it occurred to me that I need to send this email today. Hopefully you'll get it in time.

The FAQ that UNE rushed out after the May 21 meeting of the Biddeford Planning Board is in error, and I wanted you to have this information before you look at Site 7 and Site 8 on Monday.

The FAQ states definitively, "Opponents to the Site 7 location are now advocating for an alternative design," and it also states that critics have proposed "a 200-foot pier head." The piece then goes into a lengthy dissertation of why our design is inferior to UNE's preferred design.

The problem with that wordsmithing is that it's completely misleading. Our community group has never produced a design *of any sort*. Nor will we ever produce a pier and dock design. Proposing the best design and location is UNE's job. Not ours, not the Harbormaster's and not anyone else's. But what our neighborhood group *has* done is produce conclusive evidence that shows UNE's argument that Site 7 is the only possibility is flimsy.

Their argument has been advanced in public and false statements to the media and to Biddeford's city attorney by their lawyer and their PR person. Their argument against the *general area* recommended by the Harbormaster, Site 8 or what we call The Forbidden Zone, is that deep enough water does not exist there. They have been adamant about inadequate depth there --- and they're wrong. A GEI memo in the Planning Board's packet confirms that they're wrong. Yet the statements by the lawyer and their PR department have neither been retracted nor corrected. Those false statements remain on the public record, and frankly that seems to be intentional.

Opponents of Site 7 have been quite clear: Almost everyone agrees UNE should have a new pier. As you are looking out at Site 8 on Monday, please keep in mind we are certain that UNE's talented engineering vendors could easily design an innovative pier system in that *general area*, recommended by local river experts, that at low tide has *twice* the depth of water that Site 7 does.

"*Look at the deep water at Site 8*" is our position, plain and simple. It's unfortunate that UNE falsely alleges we have proposed a pier design. It's important for the Planning Board to know that we haven't, and that we won't. We appreciate and applaud the Planning Board's clear intent to consider all information objectively.

Respectfully,

JS
John Schafer

Whitten, Nan

From: Public Affairs <publicaffairsinfo@gmail.com>
Sent: Monday, June 9, 2025 7:31 AM
To: Emily.Horton@mail.house.gov; Sarah_Stanley@king.senate.gov
Subject: Biddeford mooring holders to UNE: "Announce your pier lawsuit tonight"

Caution: This is an external email. Please take care when clicking links or opening attachments. When in doubt, contact the IT Department

PRESS RELEASE

Biddeford mooring holders to UNE: "Announce your pier lawsuit tonight"

(Biddeford, Maine) Private mooring holders on the Biddeford side of the lower Saco River say that at a planned site walk tonight, the University of New England (UNE) should announce when and on what legal basis the university will sue the city.

"We legally hold moorings where they want to build a pier, and we've already told them that we're not moving," said Shawn Tibbets, a local commercial fisherman. "But UNE never listens, so here's the deal. They have to sue Biddeford to force the city to move our moorings, and that's just for starters. So make the announcement tonight, to the planning board, that you're filing a lawsuit to push us out. That's the only possible way UNE gets rid of us, but their chances are slim to none."

Biddeford's planning board is attending a site walk tonight at 5:00 p.m. on the UNE campus. It will tour "Site 7," where UNE wants to build a new marine sciences research pier. With the help of U.S. Senator Collins, UNE has secured a $3.5 million grant from the National Institute of Standards and Technology (NIST), to help with pier construction. But those with local knowledge of how the river flows say there's a better site choice very close by.

Residents packed a planning board meeting on May 21 to oppose the sketch plan for the pier's design and location. Not one person spoke in favor of the university's proposal, while more than a dozen aired complaints about a lack of transparency and UNE's arrogance in ignoring local expertise. Failing to sense the mood after the meeting, university president James Herbert made things worse by broadcasting an email on May 27 in which he accused local residents of making "outright false statements."

Mooring holders don't own the submerged land on which their mooring are placed, but their mooring locations are legally assigned by Biddeford's harbormaster. UNE has no power at all to assign, remove or replace moorings. Tibbets and others say the only way for UNE to get their coveted pier location is to ask a court to make Biddeford expel the people who are already there.

The Maine Harbor Masters Association has reminded the city that according to its own ordinance, "permission for the construction of any new wharf or pier within the jurisdictional limits of the City shall not be granted without approval of the Harbormaster." Earlier this year, several mooring owners expressed concern to Biddeford's harbormaster that they would lose their moorings.

He wrote in reply, “I am writing to let you know that, as Harbormaster, I have no plans to remove or relocate any existing mooring. My records indicate that you are a mooring owner in good standing, your fees are paid up to date, and there have been no navigation issues connected to your boating activities on the river.”

UNE downplays the moorings issue by saying that only one or two mooring are affected. However, those two mooring owners are part of the group that steadfastly refuses to move. Tibbetts said UNE circulated a public relations FAQ sheet a few days after the May 21 planning board meeting in which they wrote, “UNE will pay to relocate” moorings affected by the new pier.

“I guess they don’t understand the English language over there at the college. We’re not moving. The site they want for their pier is unavailable to the University of New England,” Tibbetts said.

###

Whitten, Nan

From: Hills Beach John <hillsbeachjohn@yahoo.com>

Sent: Tuesday, June 3, 2025 1:26 PM
To: Planning Board; Galbraith, David; Whitten, Nan
Cc: Randy Seaver; wmtw@wmtw.com; tvmail@wgme.com; desk@newscentermaine.com; srichelieu@metln.org; ggraham@pressherald.com; dmendros@metln.org; newsdesk@sacobaynews.com
Subject: UNE pier: an ill-advised change in course

Caution: This is an external email. Please take care when clicking links or opening attachments. When in doubt, contact the IT Department

Dear Planning Board,

After many encouraging comments by several Members during your May 21 meeting about transparency and openness, I have no choice but to strenuously object that an email sent by the university's Alan Thibeault has had undue influence on the scheduling of a site survey on the UNE campus. Yes, I learned this morning that UNE butted in and the site survey will now be rushed to take place on June 9th after all.

In their recent FAQ, the university wrote that federal funding is "not contingent on location or on a specific timeline…"

Get the facts --- there is no rush!

The Planning Board had started confidently down the road to full transparency and openness, until Mr. Thibeault sent his email with text highlighted in red. Now the City has caved and reversed course.

Mr. Angers wanted to be on the site survey. Mr. Patoine specifically asked that a system be in place for measuring depth at various locations. Now neither of those can happen. Further, there will be plenty of low tides this summer, after the normal workday is done, and with plenty of daylight left. I understand that a commercial fisherman formally offered to organize an expedition from the Camp Ellis pier for the Board, on boats with depth finders. That would have satisfied Mr. Patoine's curiosity about depths. NONE of that information can be collected by walking along the shore. Why even bother?

There was PLENTY of time to organize this outing correctly, because UNE's federal funds are not in any danger whatsoever. But UNE wants this pier approved quickly, facts be damned.

This is an extremely unfortunate turn of events. Mr. Thibeault should not have sent that email. The university wrote in its FAQ, "UNE has responded to all questions posed by the various regulatory agencies. As noted above, UNE is happy to meet with any interested community members to address questions about the proposed pier."

BALONEY.

If UNE was “happy” with the fact-finding process, they would not have torpedoed the attempts by Mr. Patoine, Mr. Angers, and the rest of the Board to fully inform themselves.

Despite this bad news, my neighbors and I continue to hope that the Board is determined to make sure the application is complete, and to be guided by a Code of Ethics in doing so. Thank you for hearing me out on UNE’s latest attempt to subvert the regulatory process.

Respectfully,

JS

From Mark Robinson, Biddeford resident, May 20, 2025

LETTER RE: proposal by the University of New England, new research pier

Dear Biddeford Planning Board,

I submit this letter as comment about UNE's proposal to build a new marine research pier on the Saco River.

I start by presenting you excerpts from a Maine Sunday Telegram article about how MERC came to be, published on February 27, 2000 and written by reporter Kelley Bouchard.

"The cities were impressed by a proposal from the newly formed Kuhr Technologies Inc. (KTI) and General Electric to form the Maine Energy Recovery Co.

"In October, local businessman and former state legislator Plato Truman gave Biddeford Mayor Robert Farley a petition signed by 800 residents. They wanted a nonbinding referendum on the Lincoln Street site.

"'The people, who are proud of their city, are horrified that a project of this magnitude could be put in this location and affect people for the next hundred years,' Truman told Biddeford councilors at the time.

"The council killed the referendum for fear it might jeopardize the project."

I worked for 13 years to help create the political conditions necessary to empower Biddeford's elected leaders to act decisively and remove MERC from Biddeford's downtown. (As they did.) In that 13 years I can't tell you how many times I heard, as MERC was still on the drawing board, how impressed local officials were by the fact that the great and powerful GE was willing to do business with the City of Biddeford. "It's GE, how can we go wrong!" How could we possibly question their extraordinary expertise, went the thinking.

Well, let's not forget that the "experts" are not always right, as Biddeford found out to our deep dismay once MERC started operating. I see distinct parallels with this pier situation. UNE is an impressive institution, yes, but there is no law saying we have to swallow every last bite they try to feed us.

From what I have read in all the media reports, this project has benefitted from an unusual set of circumstances, and its journey to approval seems to have had an exceptionally smooth ride so far. Certain elements of a "normal" review seem to be missing.

I do not know the river well, and so I will withhold any specific critique. I have noticed, however, that many of my friends and neighbors have said they don't oppose a pier for UNE.

What they want to make sure of is that it's built in the right location. That seems eminently reasonable to me.

You cannot go wrong carefully considering information from all sources. I know several members of the current Planning Board, and therefore have the highest confidence in the Board's integrity and its commitment to transparency. Thank you in advance for letting people know that you welcome public input. I have a feeling you might get a lot of it.

There are some very smart people in this community, and they don't all work for engineering firms. Good luck in your deliberations.

Sincerely,

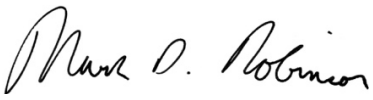

Mark Robinson
128 Fortunes Rocks Road
Biddeford, Maine 04005
207-332-3798

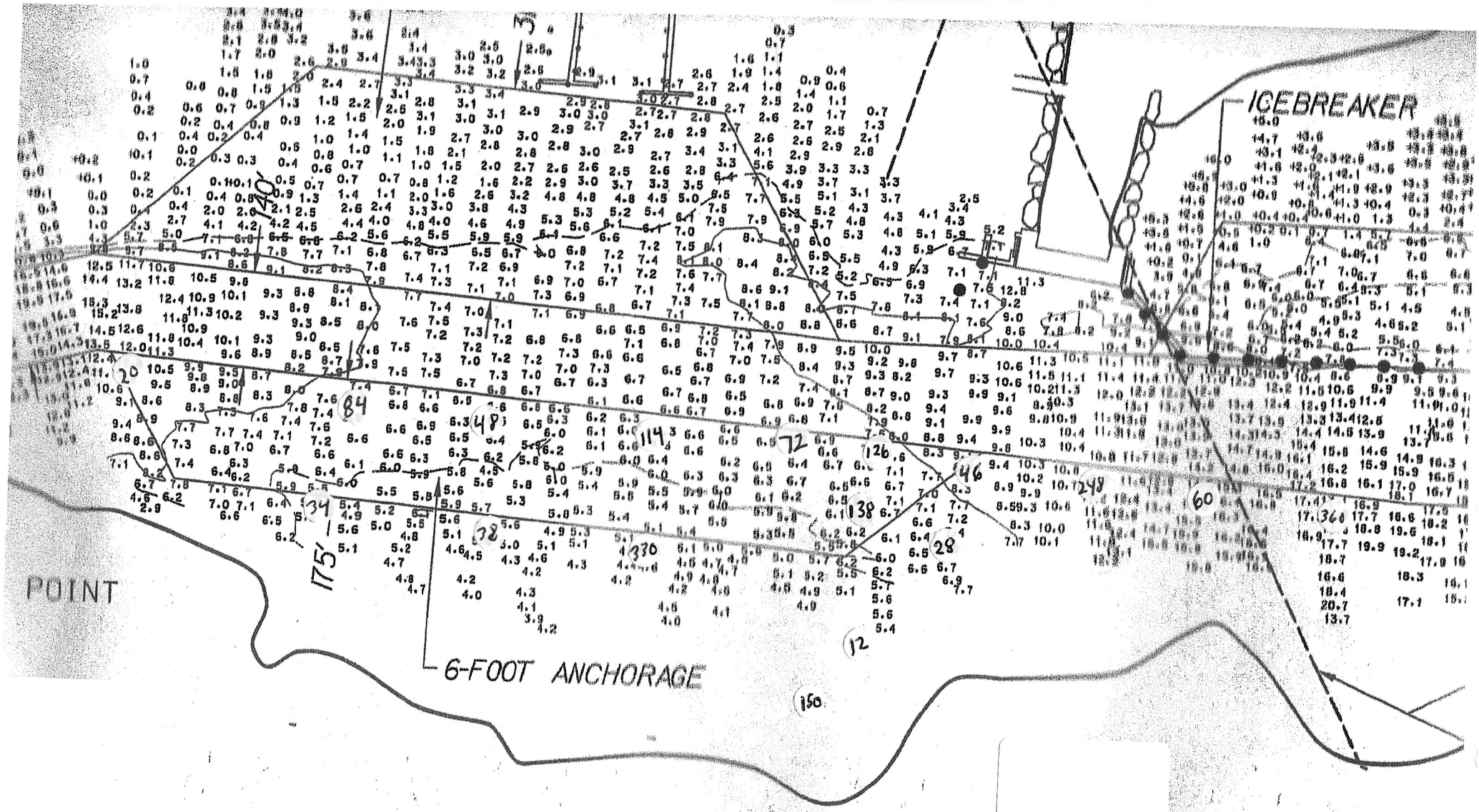

48	Beagan	Michael	20 Whitewater Dr	Biddeford	781.696.2552	mebeagan@gmail.com
114	Bergeron	Seth	5 Judge St	Biddeford	207.590.8637	
150	Bracket	Robert	97 Sherborne St	Springvale	207.206.5388	
126	Brownell	Megan	1655 Post Rd	Wells	603.498.6424	
28	Coomer	Patrick	36 Portland Ave	OOB	207.590.5833	patrickcoomer@yahoo.com
60	Gagnon	Michael	23 Middle Rd	Kennebunk	207.985.3094	
248	Gobell	Steven	205 Blueberry Rd	Waterboro	207.229.2120	
12	Hatch	Thomas	187 Hills Beach Rd	Biddeford		
72	McLaskey	Edward	120 Whitten Hill Rd	Kennebunkpport	207.284.3168	ateasefishing@gmail.com
138	McPhearson	Gregg	388 Cape Rd	Hollis	207.899.7093	
46	Ramunno	Michael	2 Fieldcrest Dr	Biddeford	207.423.3650	mramunno@maine.rr.com
360	Thibeault	John	487 Seaside Ave	Saco	207.776.0123	captain@sacodaysails.com

Shawn Tibbets 207.502.0368

UNE 34
UNE 38
UNE 330
Bove 20 5908949
Hebert 84 Ashore

CITY OF BIDDEFORD

Planning and Development Department

David C.M. Galbraith
Deputy Director/City Planner
205 Main Street
P.O. Box 586
Biddeford, ME 04005
(207) 284-9115
David.Galbraith@biddefordmaine.org

PLANNING BOARD STAFF REPORT

TO: Chair Plotkin and Members of the Biddeford Planning Board

FROM: David C.M. Galbraith, Deputy Director/City Planner

DATE: July 1, 2025

RE: 2024.34 Preliminary Plan Review – Site Plan and Shoreland Zoning Review for the University of New England (UNE) / Proposed Construction of a Marine Science Center Research Pier to be located at 11 Hills Beach Road (Map #52, Lot 4) located in the City's Institutional (IN) Zoning District.

MEETING DATE: July 16, 2025, at 6:00 PM

1. INTRODUCTION

This case was last discussed with the Planning Board on June 18, 2025, where the application was "Tabled", as a number of Planning Board members were unable to attend the site walk on June 9, 2025, and the Board voted to schedule a second site walk which is being held on July 9, 2025. Tom Saucier, PE of Site Design Associates, is representing the University of New England (UNE) who is applying for Preliminary Site Plan Review within the Shoreland Zoning District. The University of New England (UNE) proposes to construct a new pier on the Saco River adjacent to the Girard Marine Science Center (GMSC) to support research and educational programming. The project has been in development for more than 10 years and has gone through extensive planning and alternatives analysis in arriving at the design that is being proposed.

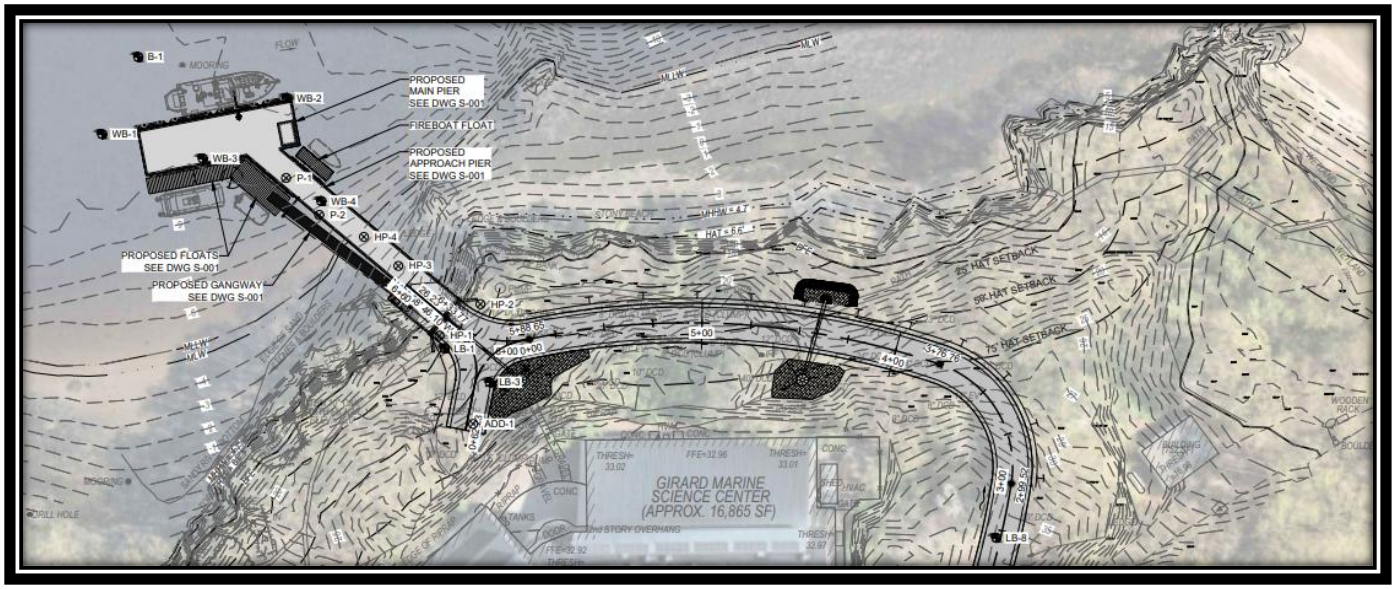

Proposed Marine Science Center Research Pier

RE: Case # 2024.34 Preliminary Plan Review – Site Plan and Shoreland Zoning Review for the University of New England (UNE) / Proposed Construction of a Marine Science Center Research Pier to be located at 11 Hills Beach Road (Map #52, Lot 4) located in the City's Institutional (IN) Zoning District.

MEETING DATE: July 16, 2025, at 6:00 PM

It should be noted that the Planning Department received the formal application for this project on April 16, 2025. However, the case # that was assigned to this project was in 2024 (Case # 2024.34) as that is when the Planning Department started receiving comments from the public on this application (prior to application submittal), and Staff wanted to make certain that any and all correspondence related to this matter be saved within the public record for complete transparency. These submitted emails / letters were forwarded to the Planning Board and the University New England and have been maintained by the Planning Department.

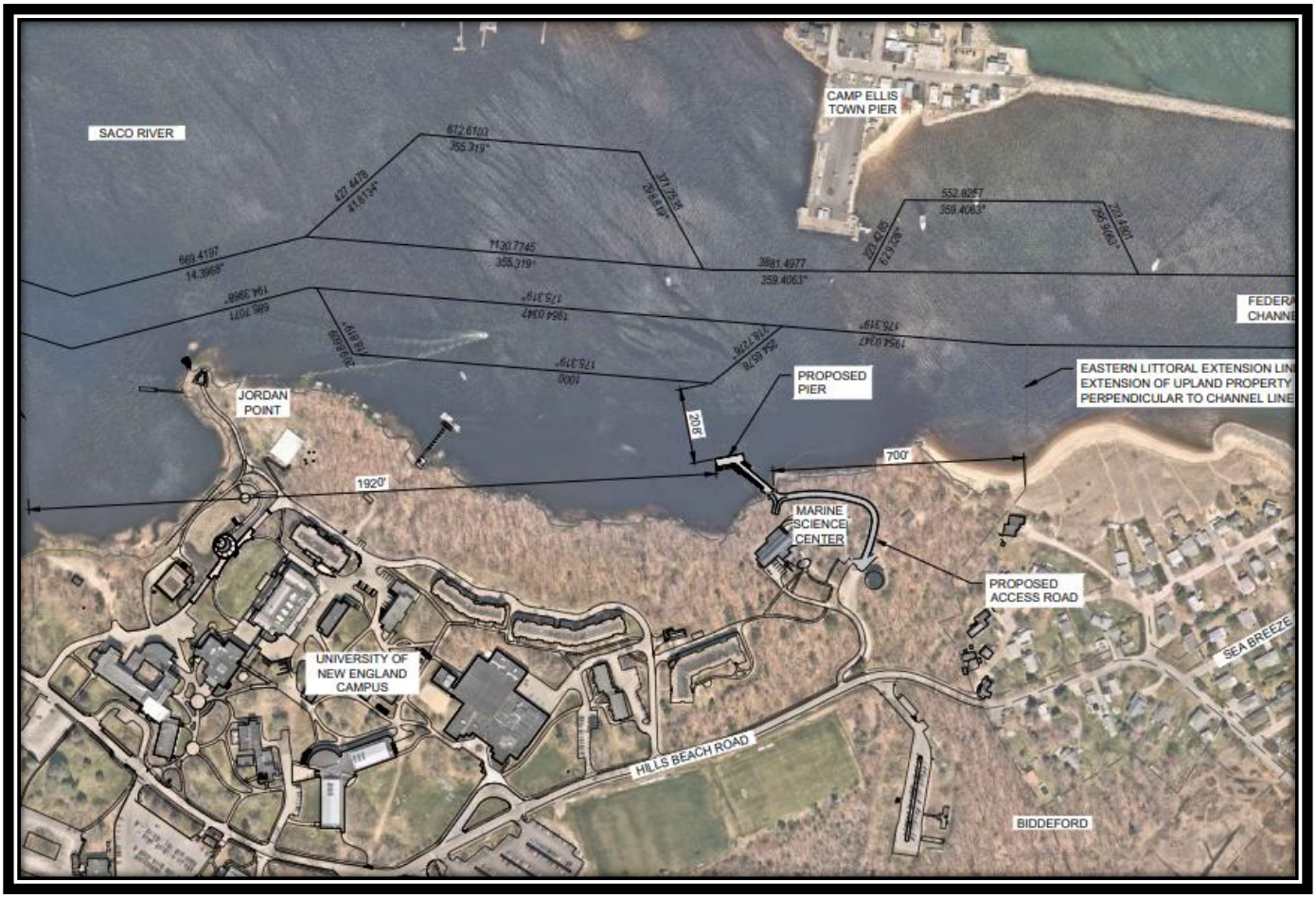

University of New England (UNE) – proposed Marine Science Center Research Pier

The University of New England (UNE) campus is located along the Saco River in Biddeford, ME. The Marine Science Center is located on the waterfront at the easterly end of campus approximately opposite Camp Ellis in Saco. To support MSC research activities, UNE proposes to construct a pier from the shore adjacent to the MSC into the Saco River to provide an all-tide access facility for small and shallow draft vessels (skiffs, landing craft, up to approximately 3-foot draft), with tidally-restricted access for larger vessels.

RE: Case # 2024.34 Preliminary Plan Review – Site Plan and Shoreland Zoning Review for the University of New England (UNE) / Proposed Construction of a Marine Science Center Research Pier to be located at 11 Hills Beach Road (Map #52, Lot 4) located in the City's Institutional (IN) Zoning District.

MEETING DATE: July 16, 2025, at 6:00 PM

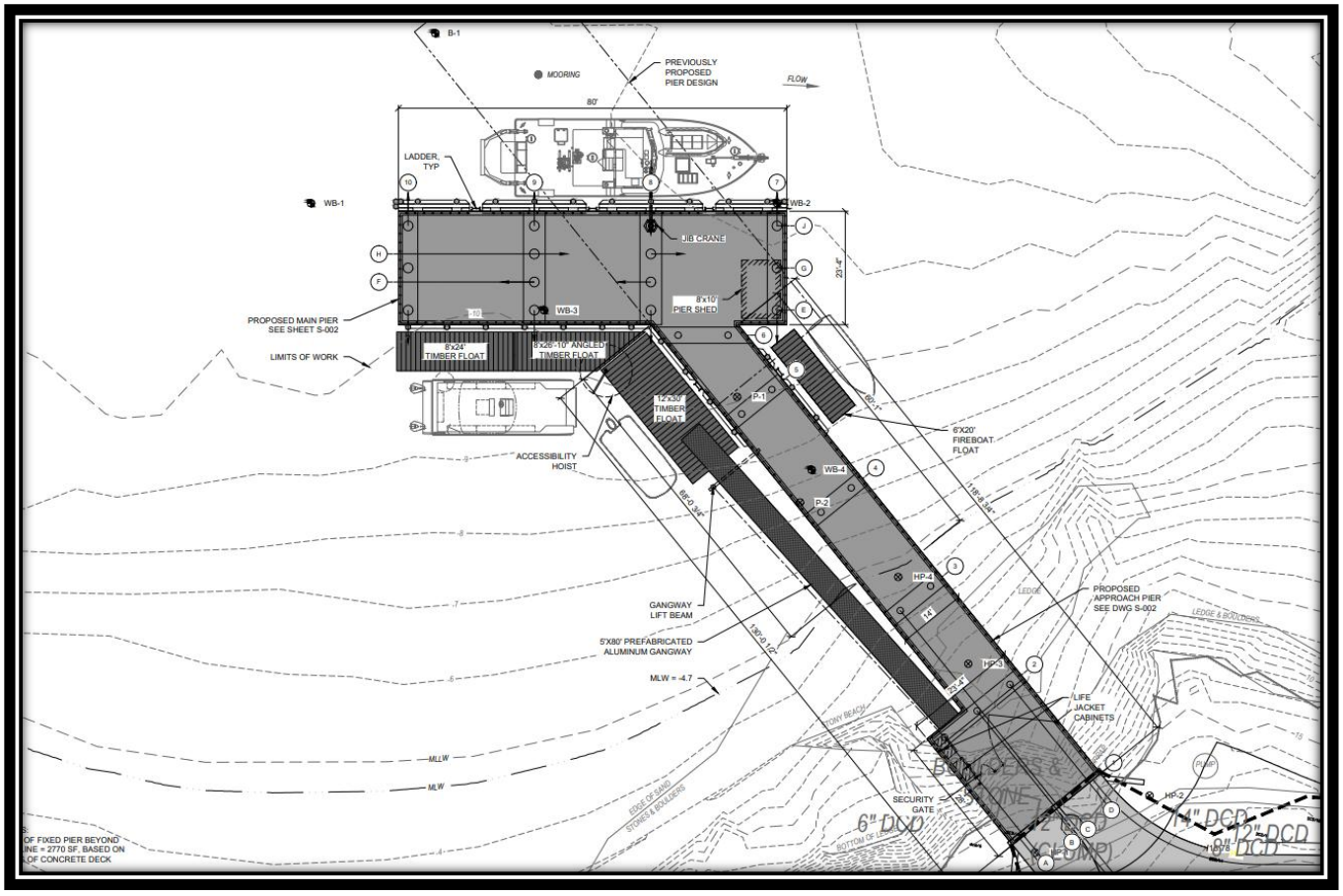

Marine Science Center Research Pier Detail

The proposed facility includes the following:

1. A pile supported pier structure extending from shore into the Saco River. The proposed pier includes an approximately 130-foot-long approach section extending from shore and an 80-foot-long pier head section oriented roughly parallel to the direction of flow in the river. The pier consists of a concrete superstructure on steel pipe piles, with timber fender piles for vessel berthing and floating docks, and a pile supported gangway lifting beam to allow the gangway ramp to be temporarily removed from the water. Site 7 (Preferred) Stormwater Management Report UNE Marine Science Center Pier September 2023, Revision B. April 2025 GEI Consultants, Inc.

2. A floating dock system consisting of one 8-foot by 24-foot float, one 8-foot by 26- foot 10-inch float, and one 12-foot by 30-foot gangway landing float to provide alltide vessel access for UNE's vessels on the west side of the pier, and a single 6-foot by 20-foot floating dock to provide a tie-up location for the City of Biddeford Fire Boat on the east side of the pier.

3. An 80-foot by 5-foot gangway, to provide ADA compliant access to the float system.

4. An upland access road connecting the existing road at the MSC to the proposed pier, including associated site grading, drainage, and stormwater management features.

These proposed improvements will result in a total increase in impervious area totaling 0.249 acres. The increase in impervious area will be managed by the two bioretention filter cells to the north of the Girard Marine Science Center. Runoff will be conveyed to the bioretention filter cells via proposed vegetated swales along the low side of the superelevated access road. The bioretention filter cells will slowly release captured stormwater via underground pipe into the Saco River/Atlantic Ocean.

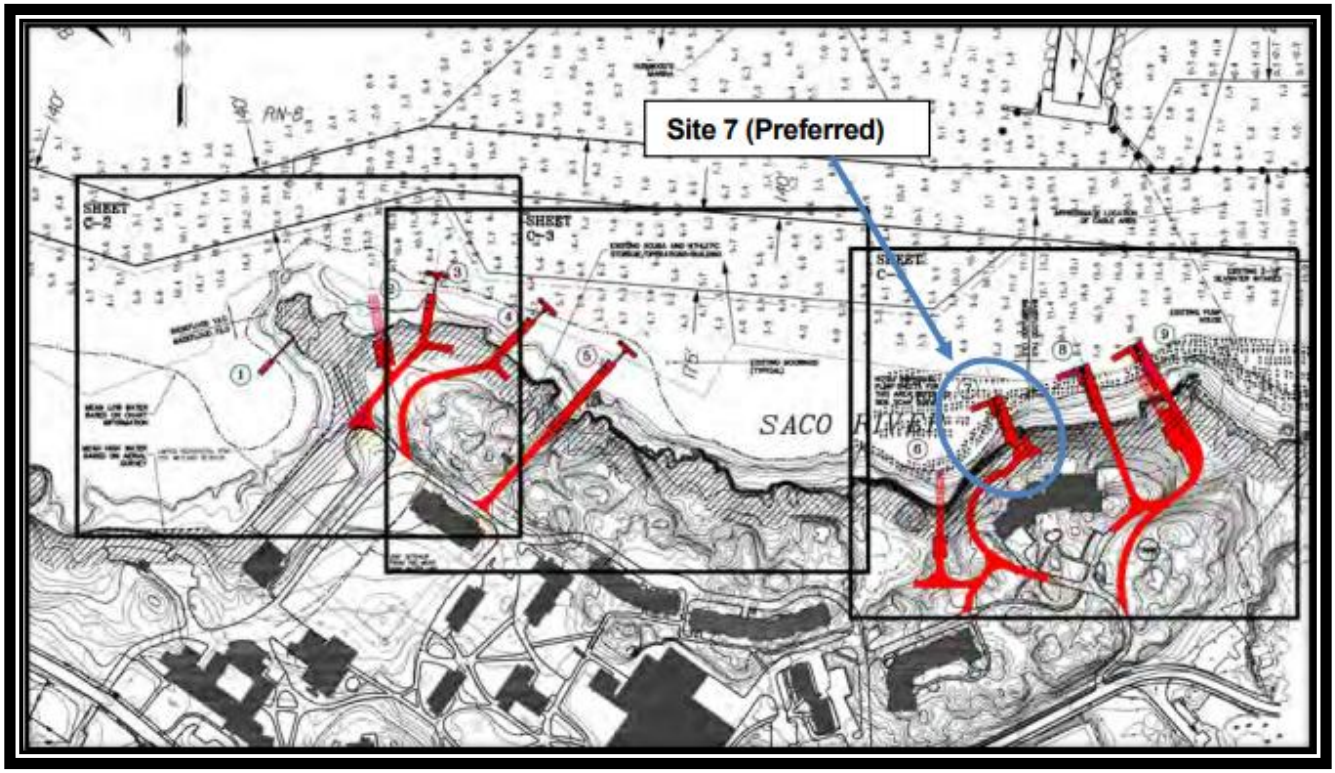

Fig. 1 – Alternative Sites Evaluated in 2008-2010 Study

As outlined in their project narrative, multiple locations for the pier were evaluated Alternative locations *"for more than 10 years and has gone through extensive planning and alternatives analysis in arriving at the design that is proposed"*.

The University's consultants (Daniel Bannon, P.E., CFM and Barney Baker, P.E. of GEI Consultants) evaluated alternate pier locations and concluded that:

> *"GEI has reviewed the concerns raised by the Saco and Biddeford Harbormasters and evaluated their impact on the proposed design, reviewed the history of planning that led to the current design location and layout, and reviewed the potential advantages and disadvantages offered by the suggested alternative pier location. <u>While we respectfully value the input and suggestions for an alternative layout, it is our opinion that the proposed design represents the preferred balance of project requirements and site constraints. Compared to the suggested</u>*

*alternative, the proposed design achieves adequate water depth, provides safe navigation, results in a structure of smaller overall dimensions with less coastal wetland impact, does not appear to be subject to significant sediment deposition, and locates the pier in a location that is less exposed to current and icing impacts. For these reasons, GEI recommends that the current design and pier location be maintained" (*Note: Emphasis added).*

After completing the pier feasibility study and identifying Site 7 as the preferred pier location, UNE undertook additional effort in 2015-2016 to study alternative pier layouts that would address the functional and vessel needs of the marine science curriculum as well as the site exposure, berthing conditions, access requirements, and associated site impacts. During this work, numerous alternative pier layouts were considered. Alternate locations evaluated water depth, exposure to currents, location relative to river sediment deposition, exposure to icing, and impacts to moorings.

2. PROJECT DATA/INFORMATION

1.	Applicant:	University of New England 11 Hills Beach Road Biddeford, ME
2.	Owner of Property:	University of New England 11 Hills Beach Road Biddeford, ME
3.	Agent:	Tom Saucier, P.E. Site Design Associates 23 Whitney Way Topsham, ME 04086
4.	Surveyor:	Tom Saucier, P.E. Site Design Associates 23 Whitney Way Topsham, ME 04086
5.	Project Location:	11 Hills Beach Road
6.	Project Tax Map #/Lot #:	Tax Map 52 Lot 4
7.	Lot Size:	49.9-acres
8.	Base Zoning:	Institutional (IN)
9.	Overlay Zoning:	Shoreland Zoning
10.	Existing Use:	Saco River
11.	Proposed Use:	Marine Research Pier
12.	Approvals Required:	Site Plan and Shoreland Review
13.	Uses in the Vicinity:	University
14.	Waivers Needed:	A. Article XI.II. Section 5.B.1.a. (post development runoff) B. Article XI.II. Section 5.B.1.e.3. (Slopes steeper than 2:1 in ledge)
18.	Waivers Granted:	Pending
22.	Other Non-City Permits Required:	N/A
23.	LDR Attachment A: Fees Paid:	Yes

25.	Planning Board Review History: Sketch Plan Review - May 21, 2025; Site Walk June 9, 2025; Preliminary Review (Tabled)- June 18, 2025; Site Walk #2 – July 9, 2025; Preliminary Review (#2) – July 16, 2025.

3. REVIEW PROCESS

Per City ordinance, this application is subject to Site Plan (Land Development Regulations, Article XI) review and Shoreland Zoning approval by the Planning Board. Below is a list of required agency reviews.

- Saco River Corridor Commission (SRCC) – Approval 9-13-2024 Attached pages # 282-287 of the Applicants application.
- Department of Environmental Protection (MDEP), Findings of Fact (FOF) and Order Pages # 288-295, dated April 11, 2025, of the Applicants application.
- U.S. Army Corps of Engineers, New England District, approval dated March 28, 2025. Pages # 296-298 of the Applicants application.
- Maine Historic Preservation Commission, Approval dated May 15, 2023.
- City of Biddeford letter from Former City Manager (James Bennett) regarding a "Notice to Proceed with External Reviews" / compliance with City Code 74-35, subsections (c) items 1-10, dated August 19, 2025, Pages #302-303 of the Applicants application.

4. SITE PLAN APPROVAL / SITE DESIGN CRITERIA:

A. Drainage:

Applicants' Comments: *A Stormwater Management Report is attached. The report submitted demonstrates compliance with Maine Department of Environmental Protection (DEP) Basic and General standards. The project will include bioretention filters designed to DEP BMP standards for enhancement of stormwater runoff quality. A waiver of Article XI.II.Section 5.B.1. is required for an increase in the rate of runoff. This waiver has historically been granted by the planning board for projects located on the UNE parcel that are directly tributary to tidal receiving waters, which will be the case for this project. There will be no impact on the capacity of a receiving downgradient storm system. The bioretention filters will provide stormwater quality enhancement and cooling of runoff, as well as a level of stormwater detention. Level spreaders will be utilized to evenly distribute runoff from the bioretention filters into sheet flow. Although an increase in the rate of runoff is shown at two-point locations on the drainage plans, the reality is that the stormwater runoff from the subcatchments is distributed over a wide area.*

Staff Comment: This standard has been met, as the project complies with the Maine Department of Environmental Protection (DEP) Basic and General standards and permits from the agency. **The project meets this standard**.

B. Utilities: Power will be fed underground to the pier from the Girard Marine Science Center.
Staff Comment: Power to the proposed pier will be provided from the Girard Marine Science Center building. **The proposed utilities address and meet this standard**.

C. Parking: There will be no formal dedicated parking associated with the project.

Staff Comment: The Girard Marine Science Center provides adequate parking for the associated / "accessory structure (pier)" as the students and faculty of Science Center will be the same users of the proposed pier. **The application meets this standard**.

D. Structural Layout and Design:

a) Design of Buildings:
An 8 ft x 10 ft shed is proposed on the pier. A photo in attachment 12 shows a rendering of the shed; a wood frame structure, with weather resistant siding, and a metal roof.

b) Setbacks:
The research pier is sited in conformance with all setback requirements.

c) Fire Protection & Safety:
Based on input from the fire department, the road width was increased to 20 ft per NFPA standards. The turnaround meets the city required dimensional standards and has been modelled to accommodate fire apparatus.

d) Landscaping:
The revegetation plan has been developed to meet the City of Biddeford's Shoreland Zoning requirements as well as to preserve a visual buffer for the access drive to minimize visibility from the water to the greatest extent possible, while achieving the required clearing and considering functional requirements such as snow plowing at the turnaround. The revegetation plan also meets the requirements of the Saco River Corridor Commission (SRCC) who issued a permit for the project.

Revegetation Plan: The revegetation plan, drawing C-15, is intended to meet the city of Biddeford's shoreland zoning requirements.
Details are as follows:

- 49 trees are being removed with 21 of those within the 50-foot HAT setback
- Approximately 5,850 SF of understory duff later and low growth vegetation (predominantly non-native invasive honeysuckle) is being disturbed within 50 feet of the HAT.
- 5 tree species are proposed in approximate equal quantities with the evergreen trees located between the road shoulder grading and the top of embankment where they are anticipated to fit under the remaining mature forest canopy, and between existing trees and ledge. Field verification during construction will be required to ensure final plant locations are feasible if shallow ledge or significant remaining tree root stock is present.
- 3 shrubs (2 evergreen and 1 deciduous) are proposed to plant at the toe of the road embankment as well as in areas around the turnaround where fitting larger trees will be challenging given limited space and the need to maintain an area for plowed snow.
- Deciduous trees are spread throughout the area.
- The bioretention cells will be filled with a mix of wet, drought and salt tolerant shrubs and perennials which are shown on the plan as a hatched area. The notes on the plan and drawing C-16 plant schedule describe the random pattern mixing of these plants throughout the bio retention cells.
- All other disturbed areas will be planted with a native roadside mix of perennial grasses and flowers. It is recommended that this area be mowed once a year in the fall to maintain the mix of plants. If mowed more often, it will revert to mostly lawn grasses. • Mature plant sizes are listed on the plant list to give a sense of the amount of screening that may occur over time.

Staff Comment: The proposed development meets these standards.

e) Service, Storage, and Utility Areas:

Staff Comment: Not applicable

f) Paving, Parking, and Storage Areas:

No paving, parking, or storage is located within the side or rear setback of the property, nor within the front setback of the property.

Staff Comment: The proposed development meets this standard.

g) Handicapped Accessibility:

Staff Comment: The proposed pier has been designed to meet ADA requirements. **The proposed development meets this standard.**

h) Loading Facilities:

Staff Comment: Standard not applicable.

i) Parking, Loading, and Protective Buffers:

The non-vegetated area of the land being developed will be less than 75% and a minimum of 25% of the land area being developed either remains in its natural state or consists of landscape and lawn areas.

Staff Comment: The proposed development meets this standard.

j) Open Space:

Staff Comment: Not applicable.

k) External Lighting:

An electrical site plan is included in the drawing set which shows the site lighting. Full cut off fixtures will be utilized, and lighting will be the minimum necessary for safety and functionality.

Staff Comment: The proposed development meets this standard.

l) Signs:

Staff Comment: The proposed standard is not applicable.

m) Historic and Archeological Resources:

See attachment 10 for a letter from the Maine Historic Preservation Commission clearing the project.

Staff Comment: The proposed development meets this standard.

5. Shoreland Zoning Land Use Standards:

The project will comply with the applicable standards of Article XIV. Section 15.C. which is listed below:

15 C. Piers, docks, wharfs, bridges and other structures and uses extending over or below the normal high-water line of a water body or within a wetland.

1. ***Except as provided in Section 15C11 and Section 15X7, no more than one pier, dock, wharf or similar structure extending or located below the normal high-water line of a water body or within a wetland is allowed on a single residential lot; except that when a single lot contains at least twice the minimum shore frontage as specified in Section 15A, a second structure may be allowed and may remain as long as the lot is not further divided.***

Staff Comment: Standard not applicable

2. ***Access from shore shall be developed on soils appropriate for such use and constructed so as to control erosion.***

Staff Comment: Access from shore will be developed on soils appropriate for the use. A detailed erosion control plan has been prepared for the project. The proposal meets this standard.

3. ***The location shall not interfere with existing developed or natural beach areas.***

Staff Comment: The proposal does not interfere with existing developed or natural beach areas. The application meets this standard.

4. *The facility shall be located so as to minimize adverse effects on fisheries.*

Staff Comment: The facility has been located to minimize adverse effects on fisheries. The plan was reviewed by the National Marine Fisheries Service. The application meets this standard.

5. ***The facility shall be no larger in dimension than necessary to carry on with the activity and be consistent with the surrounding character and uses of the area. A temporary pier, dock, or wharf in non-tidal waters shall not be wider than six feet for non-commercial uses.***

Applicant Comment: The facility size is the minimum necessary to carry out current and future research activities and is consistent with the surrounding character and uses of the area, including the Camp Ellis pier on the opposite side of the river.

Staff Comment: The proposed project meets this standard.

6. *No new structure shall be built on, over or abutting a pier, wharf, dock or other structure extending beyond the normal high-water line of a water body or within a wetland unless the structure requires direct access to the water body or wetland as an operational necessity.*

Staff Comment: Standard not applicable

7. *New permanent piers and docks on nontidal waters shall not be permitted unless it is clearly demonstrated to the Planning Board that a temporary pier or dock is not feasible, and a permit has been obtained from the Department of Environmental Protection, pursuant to the Natural Resources Protection Act.*

Staff Comment: A temporary pier / dock at this location at this location is not feasible for the proposed use. The Applicant has obtained approval from the Department of Environmental Protection (DEP).

8. *No existing structures built on, over or abutting a pier, dock, wharf or other structure extending beyond the normal high-water line of a water body or within a wetland shall be converted to residential dwelling units in any district.*

Staff Comment: Standard not applicable

9. *Except in the General Development District, structures built on, over or abutting a pier, wharf, dock or other structure extending beyond the normal high-water line of a water body or within a wetland shall not exceed 20 feet in height above the pier, wharf, dock or other structure*.

Staff Comment: An 8 ft x 10 ft shed for storage of life jackets, tools, and research equipment is proposed on the pier, and is an operational necessity. The shed will not exceed 20 ft in height. **The proposal meets this standard.**

NOTE: Permanent structures projecting into or over water bodies shall require a permit from the Department of Environmental Protection pursuant to the Natural Resources Protection Act, Title 38 M.R.S.A., Section 480-C.

Staff Comment: The Applicants have received approval for the proposed dock from the Maine Department of Environmental Protection (MDEP)

10. *Vegetation may be removed in excess of the standards in Section 15P of this ordinance in order to conduct shoreline stabilization of an eroding shoreline, provided that a permit is obtained from the Planning Board. Construction equipment must access the shoreline by barge when feasible as determined by the Planning Board.*

Applicant Comments:

a. *When necessary, the removal of trees and other vegetation to allow for construction equipment access to the stabilization site via land must be limited to no more than 12 feet in width. When the stabilization project is complete, the construction equipment accessway must be restored.*

b. Revegetation must occur in accordance with Section 15S.

NOTE: A permit pursuant to the Natural Resource Protection Act is required by the Department of Environmental Protection for shoreline stabilization activities.

Staff Comment: The applicant has submitted a detailed erosion control and revegetation plan for the project which adequately addresses erosion control and site revegetation standards. **The applicant meets this standard.**

11. A deck over a river may be exempted from the shoreland setback requirements if it is part of a downtown revitalization project that is defined in a project plan approved by the legislative body of the municipality, and may include the revitalization of structures formerly used as mills that do not meet the structure setback requirements, if the deck meets the following requirements:

Applicant's Comments:

a. The total deck area attached to the structure does not exceed 700 square feet;

b. The deck is cantilevered over a segment of a river that is located within the boundaries of the downtown revitalization project;

c. The deck is attached to an accessory to an allowed commercial use in a structure that was constructed prior to 1971 and is located within the downtown revitalization project;

d. The construction of the deck complies with all other applicable standards, except the shoreline setback requirements in Section 15B; and

e. The construction of the deck complies with all other state and federal laws.

Staff Comment: The proposal is for a dock/pier, so the above standards related to "decks" are not applicable. **Standard not applicable**.

6. Departmental Review Comments:

E. Planning:

1) No Comments.

F. Code Enforcement:

1. No comments / concerns at this time.

G. Engineering / Public Works:

1. No comments at this time.

H. Police Department:

1. No comments / concerns at this time.

I. Fire Department:

1. The Fire Department has been meeting with representatives of UNE to verify the proposed fire turn-around's design is adequate to maneuver the City's largest fire apparatus.

J. Traffic Peer Review:

1. Not Applicable.

K. Engineering Peer Review:

1. No comments at this time.

7. SITE PLAN APPROVAL CRITERIA: The proposed project will need to meet the standards below at Final Planning Board review:

1) The proposed use meets specific requirements set forth in this ordinance and would be in compliance with applicable state or federal laws;

2) The proposed use would not create fire safety hazards by providing adequate access to the site, or to the buildings on the site, for emergency vehicles and would not create hazards through the storage of chemicals and wastes;

3) The proposed exterior lighting, where allowed, would not create hazards for motorists traveling on adjacent public streets or is adequate for the safety of occupants or users of the site or would not damage the value and diminish the usability of adjacent properties;

4) The provisions for buffers and on-site landscaping provide adequate protection to neighboring properties from detrimental or unsightly features of the development;

5) The proposed use would not have a significant, detrimental effect on the use and peaceful enjoyment of abutting property as the result of noise, vibrations, fumes, odors, dust, glare, hours of operation, or other causes;

6) The provisions for vehicular loading and unloading and parking and for vehicular and pedestrian circulation on the site and onto adjacent public streets would not create hazards to public safety or traffic congestion;

7) The proposed use would generate a volume of traffic that can reasonably be accommodated by the existing road network, or would not create unreasonable traffic hazards or would not exacerbate an existing traffic hazard, or would not create unreasonable traffic congestion;

8) The proposed use would not have a significant, detrimental effect on the value of adjacent properties which could be avoided by reasonable modification of the proposal;

9) The proposed use would not have an adverse impact on the privacy of the residents of the immediate area (within 500 feet) which could be avoided by reasonable modification of the proposal;

10) The proposed use would be in compliance with Biddeford's Comprehensive Plan;

11) The proposed use would not have an adverse impact on the immediate neighborhood or the community relative to architectural design, scale, bulk and building height, identity and historical character, or visual integrity, which could be avoided by reasonable modification of the proposal;

12) The design of the site would not result in significant flood hazards or flood damage or would be in conformance with applicable flood hazard protection requirements;

13) Adequate provision has been made for the disposal of wastewater or solid waste or for the prevention of ground or surface water contamination;

14) Adequate provision has been made to control erosion or sedimentation;

15) Adequate provision has been made to handle stormwater runoff or other drainage problems on the site; and the proposed development will not unduly burden off-site surface water systems;

16) The proposed water supply would meet the demands of the proposed use for fire protection purposes;

17) Adequate provision has been made for the transportation, storage, and disposal of hazardous substances and materials as defined by state law;

18) The proposed use would not have an adverse impact on scenic vistas or on significant wildlife habitat or wetland areas and water bodies which could be avoided by reasonable modification of the proposal;

19) When located in the Shoreland Zone, the proposed use would meet the purposes of Shoreland Zoning as identified in Article XIV, Section 1 (Purposes) of this ordinance.

8. STAFF REVIEW

APPLICATION COMPLETENESS: This Application is for a "Preliminary Plan" review and in addition to Planning Board review and approval of the project, it also requires approval from:

A. **ZONING:**

The subject property is located within the City's Institutional (IN) zoning district where a university research dock is a permitted use.

B. **REVIEW STANDARDS:**

The major site details being proposed, such as the research dock, access roadway, and landscaped areas have been designed by the Applicant. The submitted application has been in the design process for approximately 10 years, so the "Preliminary Review" application is identical to the "sketch plan" documents as the application was "determined complete" during "Sketch Plan" review. Plans remain unchanged. In reviewing the application, Staff finds that the application satisfies the City's Shoreland Zoning Ordinance and Site Plan criteria.

C. WAIVER REQUESTS:

The Applicants are seeking four (4) waivers, namely:

1) **Waiver Request #1: Article XI.II. Section 5.B.1.a.**
"The rate of post-development runoff shall not exceed that of predevelopment. Details of catch basins, drainage pipes and retention/detention ponds shall be provided as needed with the application. All detail sheets shall bear the seal and signature of a professional engineer, licensed in the State of Maine".

Applicant Waiver Request Rational*:*

A waiver of Article XI.II.Section 5.B.1.a *is required for an increase in the rate of runoff. This waiver has historically been granted by the planning board for projects located on the UNE parcel that are directly tributary to tidal receiving waters, which will be the case for this project. There will be no impact on the capacity of a receiving downgradient storm system. The bioretention filters will provide stormwater quality enhancement and cooling of runoff, as well as a level of stormwater detention. Level spreaders will be utilized to evenly distribute runoff from the bioretention filters into sheet flow. Although an increase in the rate of runoff is shown at two-point locations on the drainage plans, the reality is that the stormwater runoff from the subcatchments is distributed over a wide area.*

2) ***Waiver Request #2: Article XI.II. Section 5.B.1.e.3.:***
No slope shall be created which results in a slope of more than two feet horizontal to one foot vertically unless proper retaining walls are proposed. The design includes slopes which exceed this standard in ledge (1/4H:1V) and along the drive (1H:1V). This waiver has been requested by UNE and granted by the planning board for all projects proposed by UNE on the campus due to the presence of ledge and the desire to minimize impacts of construction on adjacent areas. Based on our experience the ledge in the area is stable at steeper slopes. Turf reinforcement matting specifically designed to stabilize steeper slopes will be utilized along the drive sideslopes.

3) **Waiver Request # 3: Article VI. Section 26.F.:**
No cut or fill slopes that exceed 3 horizontals to 1 vertical. See above for justification.

4) **Waiver Request #4: Article XIV. Section 15.H.4.**

Road and driveway banks shall be no steeper than a slope of two horizontal to one vertical and shall be graded and stabilized in accordance with the provisions for erosion and sedimentation control contained in Section 15T. See above for justification for steeper slopes. The erosion control specified for the project exceeds the standards of Section 15T.

9. SAMPLE WAIVER REQUEST MOTIONS:
The Applicant is seeking four (4) waivers listed below. Waiver #1 relates post vs pre-development runoff. Waivers #2 – 4 relate to steep slopes.

1) **Waiver Request #1: Article XI.II. Section 5.B.1.a. (***post-development runoff shall not exceed that of predevelopment).*
2) ***Waiver Request #2: Article XI.II. Section 5.B.1.e.3. (****No slope shall be created which results in a slope of more than two feet horizontal to one foot vertically unless proper retaining walls are proposed).*
3) **Waiver Request # 3: Article VI. Section 26.F.: (**No cut / fill slopes that exceed 3 horizontal to 1 vertical)
4) **Waiver Request #4: Article XIV. Section 15.H.4. (**driveway banks shall be no steeper than a slope of two horizontal to one vertical)

Staff are supportive of the proposed waivers and recommend approving all of the requested waivers.

A. Motion to Approve: I motion to APPROVE the requested waiver for (insert waiver number and type) for Case # 2024.34 Site Plan and Shoreland Zoning Review for the University of New England (UNE) / Proposed Construction of a Marine Science Center Research Pier to be located at 11 Hills Beach Road (Map #52, Lot 4) located in the City's Institutional (IN) Zoning District.

B. Motion to Deny: I motion to DENY the requested waiver for (insert waiver number and type) for Case # 2024.34 Site Plan and Shoreland Zoning Review for the University of New England (UNE) / Proposed Construction of a Marine Science Center Research Pier to be located at 11 Hills Beach Road (Map #52, Lot 4) located in the City's Institutional (IN) Zoning District, for the following reasons:

1) _____.
2) _____.
3) _____.

C. Motion to Table: I motion to TABLE the requested waiver for (insert waiver number and type) for Case # 2024.34 Site Plan and Shoreland Zoning Review for the University of New England (UNE) / Proposed Construction of a Marine Science Center Research Pier to be located at 11 Hills Beach Road (Map #52, Lot 4) located in the City's Institutional (IN) Zoning District, for the following reasons:

1) _____.
2) _____.
3) _____.

RE: Case # 2024.34 Preliminary Plan Review – Site Plan and Shoreland Zoning Review for the University of New England (UNE) / Proposed Construction of a Marine Science Center Research Pier to be located at 11 Hills Beach Road (Map #52, Lot 4) located in the City's Institutional (IN) Zoning District.

MEETING DATE: July 16, 2025, at 6:00 PM

10. SAMPLE MOTIONS FOR SITE PLAN AND SHORELAND ZONE APPROVAL:

The Application before the Board is a "Preliminary Plan", so a formal vote is required.

A. Motion to Approve: I motion to APPROVE Case # 2024.34 Preliminary Plan – Site Plan and Shoreland Zoning Review for the University of New England (UNE) / Proposed Construction of a Marine Science Center Research Pier to be located at 11 Hills Beach Road (Map #52, Lot 4) located in the City's Institutional (IN) Zoning District.

B. Motion to Deny I motion to DENY Case # 2024.34 Preliminary Plan – Site Plan and Shoreland Zoning Review for the University of New England (UNE) / Proposed Construction of a Marine Science Center Research Pier to be located at 11 Hills Beach Road (Map #52, Lot 4) located in the City's Institutional (IN) Zoning District, for the following reasons:

1)_____.

2)_____.

3)_____.

C. Motion to Table: I motion to TABLE Case # 2024.34 Preliminary Plan – Site Plan and Shoreland Zoning Review for the University of New England (UNE) / Proposed Construction of a Marine Science Center Research Pier to be located at 11 Hills Beach Road (Map #52, Lot 4) located in the City's Institutional (IN) Zoning District, for the following reasons:

1) _____.

2) _____.

3) _____.

APPLICATION FOR MAINE
DEPT OF ENVIRONMENTAL PROTECTION
NATURAL RESOURCES PROTECTION ACT
AND
ARMY CORPS OF ENGINEERS PERMITS
FOR
RESEARCH PIER AND FLOATS

Applicant:

UNIVERSITY OF NEW ENGLAND
11 HILLS BEACH ROAD
BIDDEFORD, MAINE 04005

June 17, 2024

Prepared by:

Site Design Associates
23 Whitney Way
Topsham, Maine 04086
Ph: 207-449-4275
Email: info@sitedesignassociates.biz

TABLE OF CONTENTS

APPLICATION FOR
MAINE DEPARTMENT OF ENVIRONMENTAL PROTECTION
NATURAL RESOURCES PROTECTION ACT
AND
ARMY CORPS OF ENGINEERS PERMIT

NRPA Permit Application Form

Letter of Agent Authorization

Deed

Attachment 1:	Activity Description
Attachment 2:	Alternatives Analysis
Attachment 3:	Location Map
Attachment 4:	Photos
Attachments 5/6:	Plans
Attachment 7:	Construction Plan
Attachment 8:	Erosion Control Plan
Attachment 9:	Wetland Delineation Report/Coastal Wetland Characterization Appendix B
Attachment 10:	Notice of Intent to File
Attachment 11:	MHPC and TRIBE Correspondence
Attachment 12:	MDEP Visual Evaluation Field Survey Checklist Appendix A
Attachment 13:	Appendix D – Project Description Worksheet
Attachment 14:	Species List, MA Consistency Letter, and Correspondence with USFW regarding the Northern Long-eared Bat.
Attachment 15:	Abutter Notifications

Department of Environmental Protection
Bureau of Land & Water Quality
17 State House Station
Augusta, Maine 04333
Telephone: 207-287-7688

FOR DEP USE
ATS #_____
L- _____
Total Fees: _____
Date: Received _____

APPLICATION FOR A NATURAL RESOURCES PROTECTION ACT PERMIT

➔**PLEASE TYPE OR PRINT IN *BLACK INK ONLY***

1. Name of Applicant:	University of New England,. Andrew Philippe	**5.Name of Agent:**	Tom Saucier, Site Design Associates
2. Applicant's Mailing Address:	11 Hills Beach Road	**6. Agent's Mailing Address:**	23 Whitney Way Topsham, Maine 04086
3. Applicant's Daytime Phone #:	602-2365	**7. Agent's Daytime Phone #:**	207-449-4275
4. Applicant's Email Address (Required from *either* applicant or agent):	aphilippe@une.edu	**8. Agent's Email Address:**	tsaucier@sitedesignassociates.biz

9. Location of Activity: (Nearest Road, Street, Rt.#)	11 Hills Beach Road	**10. Town:**	Biddeford	**11. County:**	York

12. Type of Resource: (Check all that apply)
- ❑ River, stream or brook
- ❑ Great Pond
- ■ Coastal Wetland
- ❑ Freshwater Wetland
- ❑ Wetland Special Significance
- ❑ Significant Wildlife Habitat
- ❑ Fragile Mountain

13. Name of Resource: Saco River

14. Amount of Impact: (Sq.Ft.)
Fill: 84 sf
Dredging/Veg Removal/Other: NA

15. Type of Wetland: (Check all that apply)
- ❑ Forested
- ❑ Scrub Shrub
- ❑ Emergent
- ❑ Wet Meadow
- ❑ Peatland
- ❑ Open Water
- ■ Other Ledge and soil below HAT

FOR FRESHWATER WETLANDS

Tier 1	*Tier 2*	*Tier 3*
❑ 0 - 4,999 sq ft. ❑ 5,000-9,999 sq ft ❑ 10,000-14,999 sq ft	❑ 15,000 – 43,560 sq. ft.	❑ > 43,560 sq. ft. or ■ smaller than 43,560 sq. ft., not eligible for Tier 1

16. Brief Activity Description: Construction of a research pier, floats, and gangway. See plans and narratives.

17. Size of Lot or Parcel & UTM Locations: ☐ _____square feet, or ☑ 8.6 acres UTM Northing: _____ UTM Easting: _____

18. Title, Right or Interest: ■ own ❑ lease ❑ purchase option ❑ written agreement

19. Deed Reference Numbers:	Book#: 1484 Page: 0145	**20. Map and Lot Numbers:**	Map #: 52	Lot #: 4	
21. DEP Staff Previously Contacted:	Alison Sirois	**22. Part of a larger project:**	❑ Yes ■ No	**After-the-Fact:**	❑ Yes ■ No
23. Resubmission of Application?:	❑ Yes➔ ■ No	**If yes, previous application #**		**Previous project manager:**	
24. Written Notice of Violation?:	❑ Yes ➔ ■ No	**If yes, name of DEP enforcement staff involved:**		**25. Previous Wetland Alteration:**	❑ Yes ■ No

26. Detailed Directions to the Project Site: Route 9 from Biddeford to Hills Beach Road. Proceed on Hills Beach Road for 0.7 miles to the Girard Science center. Drive will be on the left.

27.

TIER 1	**TIER 2/3 AND INDIVIDUAL PERMITS**	
❒ Title, right or interest documentation	■ Title, right or interest documentation	■ Erosion Control/Construction Plan
❒ Topographic Map	■ Topographic Map	❒ Functional Assessment (Attachment 3), if required
❒ Narrative Project Description	■ Copy of Public Notice/Public Information Meeting Documentation	❒ Compensation Plan (Attachment 4), if required
❒ Plan or Drawing (8 1/2" x 11")	■ Wetlands Delineation Report (Attachment 1) that contains the Information listed under Site Conditions	■ Appendix A and others, if required
❒ Photos of Area	■ Alternatives Analysis (Attachment 2) including description of how wetland impacts were Avoided/Minimized	■ Statement/Copy of cover letter to MHPC
❒ Statement of Avoidance & Minimization		❒ Description of Previously Mined Peatland, if required
❒ Statement/Copy of cover letter to MHPC		

28. FEES Amount Enclosed: $611 paid on line

CERTIFICATIONS AND SIGNATURES LOCATED ON PAGE 2

IMPORTANT: IF THE SIGNATURE BELOW IS NOT THE APPLICANT'S SIGNATURE, ATTACH LETTER OF AGENT AUTHORIZATION SIGNED BY THE APPLICANT.

By signing below the applicant (or authorized agent), certifies that he or she has read and understood the following :

DEP SIGNATORY REQUIREMENT

PRIVACY ACT STATEMENT

Authority: 33 USC 401, Section 10; 1413, Section 404. Principal Purpose: These laws require permits authorizing activities in or affecting navigable waters of the United States, the discharge of dredged or fill material into waters of the United States, and the transportation of dredged material for the purpose of dumping it into ocean waters. Disclosure: Disclosure of requested information is voluntary. If information is not provided, however, the permit application cannot be processed nor a permit be issued.

CORPS SIGNATORY REQUIREMENT

USC Section 1001 provides that: Whoever, in any manner within the jurisdiction of any department or agency of the United States knowingly and willfully falsifies, conceals, or covers up any trick, scheme, or disguises a material fact or makes any false, fictitious or fraudulent statements or representations or makes or uses any false writing or document knowing same to contain any false, fictitious or fraudulent statements or entry shall be fines not more than $10,000 or imprisoned not more than five years or both. I authorize the Corps to enter the property that is subject to this application, at reasonable hours, including buildings, structures or conveyances on the property, to determine the accuracy of any information provided herein.

DEP SIGNATORY REQUIREMENT

"I certify under penalty of law that I have personally examined the information submitted in this document and all attachments thereto and that, based on my inquiry of those individuals immediately responsible for obtaining the information, I believe the information is true, accurate, and complete. I authorize the Department to enter the property that is the subject of this application, at reasonable hours, including buildings, structures or conveyances on the property, to determine the accuracy of any information provided herein. I am aware that there are significant penalties for submitting false information, including the possibility of fine and imprisonment.

Further, I hereby authorize the DEP to send me an electronically signed decision on the license I am applying for with this application by emailing the decision to the address located on the front page of this application (see #4 for the applicant and #8 for the agent)."

SIGNATURE OF AGENT/APPLICANT

Date: 4/11/24

NOTE: Any changes in activity plans must be submitted to the DEP and the Corps in writing and must be approved by both agencies prior to implementation. Failure to do so may result in enforcement action and/or the removal of the unapproved changes to the activity.

(pink)

State of Maine DEP Payment Receipt

Contact Inform Thomas Saucier - 23 Whitney Way, Topsham, ME, 04086

(207) 449-4275

tsaucier@sitedesignassociates.biz

Product	Reference Number	Customer Number	Payment Amount	Comments
Natural Resources Protection Act (Individual Permit)	New Application		$651.00	Processing and licensing fee

Receipt ID: 5822

Transaction Date: 6/17/2024 4:06:45 PM

Transaction Summary

Payment	$651.00
Service Fe	$2.00
Total	**$653.00**

Thank you for your successful transaction.

If you have questions or concerns, please call (207) 287-7688

or Email: Payments.DEP@maine.gov

Print

UNIVERSITY OF NEW ENGLAND

Biddeford Campus
11 Hills Beach Road
Biddeford, ME 04005
(207) 283-0171 T

Portland Campus
716 Stevens Avenue
Portland, ME 04103
(207) 797-7261 T

May 29, 2023

Mr. Tom Saucier
Site Design Associates
23 Whitney Way
Topsham, Maine 04086

TO WHOM IT MAY CONCERN:

This letter authorizes Tom Saucier, Site Design Associates, to serve as an agent for University of New England for the purpose of permitting the proposed installation of a pier and float, on its Biddeford campus.

Sincerely,

Alan Thibeault
Vice president for University Operations

Excepting and reserving, however, from the last parcel described a small triangular parcel of land in the rear of the premises of Charles E. Roberts which triangular lot has a base of about 50 feet in length which is an extension of the northwesterly boundary of said Roberts lot; and has an altitude of about 100 feet in length which is the northeasterly side thereof and is located in the center of a ditch long supposed to be the rear line of the Roberts lot; and which has a hypotenuse which is coincident with the rear line of said Roberts lot and is the southerly side of said triangule, being the same premises conveyed by Blanche T. Beuscher and Olga M. DeHaven to the said Kenneth A. Littlefield and Barbara A. Littlefield, by their deed of mortgage dated on the twentieth (20) day of February 1958 and recorded in York Registry of Deeds, Book 1354, Page 447, but described under the aforementioned reference only as three certain lots or parcels of land, with buildings thereon, and mentioned as being the same premises conveyed on February 20th, 1958, by Kenneth A. and Barbara A. Littlefield to Blance T. Beuscher and Olga M. DeHaven, by Warranty Deed, Recorded Book 1362, Page 112; and that such entry was made and possession taken as aforesaid, for the avowed purpose of foreclosing said mortgage, because of a breach of the condition thereof.

Raymond E. Mealey

Madeline C. Mealey

STATE OF MAINE

COUNTY OF YORK, SS March 24, 1962 Signed and sworn to by the said Raymond E. Mealey and Madeline C. Mealey,

Before me. Maurice L. Shibles Notary Public (L.S.)
My Commission Expires Sept. 2, 1966

Recorded according to the original received April 6, 1962 at 11h. 58m. A. M. EL

KNOW ALL MEN BY THESE PRESENTS, THAT, COUVENT de la PRESENTATION de MARIE, a corporation organized and existing under the laws of the State of Maine and located at Biddeford, in the County of York and said State of Maine, in consideration of One Hundred Fifty Thousand Dollars ($150,000.00) paid by THE FRANCISCAN FATHERS OF MAINE, a corporation duly organized by law and having an established place of business at 605 Pool Road, in said Biddeford, the receipt whereof it does hereby acknowledge, does hereby give, grant, bargain, sell and convey, unto the said The Franciscan Fathers of Maine, its successors or assigns, forever, the following described property: I.R.S. One Hundred and Sixty Five Dollars

Parcel 1

A certain lot or parcel of land, with the buildings thereon, situated in

said Biddeford and bounded and described as follows:

BEGINNING at a point on the Northerly side of the Hill's Beach Road, so-called, in said Biddeford, said point being the Westerly corner of the land herein conveyed and being in the Southerly line of land formerly of one Finney and now of Couvent de la Presentation de Marie, and being marked by an iron stake driven into the ground; thence South eighty-two degrees eight minutes East (S 82° 08' E) two hundred fourteen and forty-six one-hundredths (214.46) feet by said Hill's Beach Road to an iron stake driven into the ground; thence North eighty-one degrees forty-two minutes East (N 81° 42' E) five hundred forty-five and five one-hundredths (545.05) feet by said Hill's Beach Road to an iron stake driven into the ground; thence South fifty degrees thirty-five minutes East (S 50° 35' E) two hundred thirty-eight and forty-seven one-hundredths (238.47) feet by said Hill's Beach Road to an iron stake driven into the ground and other land of this Grantor; thence North eighty-six degrees twenty-seven minutes East (N 86° 27' E) sixteen and ninety-one one-hundredths (16.91) feet by said other land of this Grantor to a drill hole into the ledge and land now or formerly of John J. Traynor; thence North three degrees thirty-three minutes West (N 3° 33' W) one hundred thirty-three and five tenths (133.5) feet by said land of John J. Traynor, land now or formerly of one Michael Reddy and a reserved street as shown on a plan of land of William A. Chadbourne, drawn by Z. G. Staples, July 14, 1874, and recorded in York County Registry of Deeds in Plan Book 2, Page 40, and by the stone wall to an iron stake driven into the ground at the Southwesterly corner of land now or formerly of William Libby; thence North twenty-two degrees forty-one minutes West (N 22° 41' W) one hundred twenty-eight and one-half (128½) feet by said land of William Libby, other land of this Grantor and by the stone wall to an angle in said stone wall; thence North fifty-five degrees fifty-seven minutes East (N 55° 57' E) three hundred ninety-three and nineteen one-hundredths (393.19) feet by said other land of this Grantor, by a reserved street as shown on said plan, and land now or formerly of Thomas Gallagher and by the fence and wall to an iron stake driven into the ground at the top of the bank; thence this same course to Saco River; thence Northerly, Northwesterly and Westerly by said River to an iron stake driven into the ground at a point of ledge and to said other land of this Grantor; thence South forty-one degrees East (S 41° E) three hundred thirty-nine and seven tenths (339.7) feet to an iron stake driven into the ground at the stone wall; thence South sixty-three degrees West (S 63° W) fifty-six and three tenths (56.3)feet by said stone wall to an iron stake driven into the ground; thence South sixty-nine degrees fifteen minutes West (S 69° 15' W) one hundred sixteen and one-half (116½) feet by said

wall to
forty m
(128.5)
sixty-e
tenths
North e
nine te
thence
seventy
into th
19' W)
into th
one hun
into th
W) one
of begi
of this

of the
Road;
sixtee
cel to
thence
sevent
Beach
twenty
of beg

calle
bound

by Z.
of th
dred
(50)
by la
E) or

wall to an iron stake driven into the ground; thence South fifty-three degrees forty minutes West (S 53° 40' W) one hundred twenty-eight and five tenths (128.5) feet by said wall to an iron stake driven into the ground; thence South sixty-eight degrees nineteen minutes West (S 68° 19' W) one hundred and four tenths (100.4) feet by said wall to an iron stake driven into the ground; thence North eighty-eight degrees four minutes West (N 88° 04' W) seventy-seven and nine tenths (77.9) feet by said wall to an iron stake driven into the ground; thence South seventy-four degrees twenty-three minutes West (S 74° 23' W) seventy-nine and two tenths (79.2) feet by said wall to an iron stake driven into the ground; thence South fifty-seven degrees nineteen minutes West (S 57° 19' W) ninety-five and one tenth (95.1) feet by said wall to an iron stake driven into the ground; thence South sixty-four degrees ten minutes West (S 64° 10' W) one hundred six and nine tenths (106.9) feet by said wall to an iron stake driven into the ground; thence South sixty-five degrees thirty minutes West (S 65° 30' W) one hundred forty-four and eight tenths (144.8) feet by said wall to the point of beginning. The last ten courses described being bounded by said other land of this Grantor. The above courses refer to the 1931 magnetic meridian.

Parcel 2

Also another certain lot of land, bounded and described as follows:

BEGINNING at an iron stake driven into the ground at the Southerly corner of the above described parcel and on the Northerly side of said Hill's Beach Road; thence North eighty-six degrees twenty-seven minutes East (N 86° 27' E) sixteen and ninety-one one-hundredths (16.91) feet by said above described parcel to a drill hole in the ledge and land now or formerly of John J. Traynor; thence South three degrees thirty-three minutes East (S 3° 33' E) fifteen and seventy-five one-hundredths (15.75) feet by said land of Traynor to said Hill's Beach Road; thence North fifty degrees thirty-five minutes West (N 50° 35' W) twenty-three and eleven one-hundredths (23.11) feet by said road to the point of beginning.

Parcel 3

Also another certain lot or parcel of land, situated at Hill's Beach, so-called, in said Biddeford, and adjoining the first above described parcel, bounded and described as follows:

BEGINNING at the Northwest corner of Lot #18, on a plan of land made by Z. G. Staples for William A. Chadbourne, dated July 14, A. D. 1874, at land of the late Selucus Adams and S. S. Mitchell; thence running Southerly one hundred (100) feet to Lot #17 on said plan; thence Westerly by last named lot fifty (50) feet; thence North forty-eight degrees West (N 48° W) forty-eight (48) feet by land of said Adams; thence North fifty-one and one-half degrees East (N 51½° E) one hundred six (106) feet by land of said Adams and Mitchell to the place of

48
pg 146

Book 1484

beginning, and containing about five thousand four hundred and twenty-four (5,424) square feet, being the same parcel of land as described in deed of James B. Marr and others to Caroline P. Adams, dated April 1, 1891 and recorded in York County Registry of Deeds in Book 443, Page 88.

The above described premises were conveyed to the within Grantor by Les Soeurs de la Presentation de Marie by deed of Warranty, dated September 30, 1932 and recorded in York County Registry of Deeds in Book 834, Page 67.

Parcel 4

Also another certain lot or parcel of land, together with the buildings thereon, situated in said Biddeford and known as the old Ralph Tristram Jordan place situated on the northeasterly side of the Pool Road, so-called, bounded on the southwesterly side by said Pool Road; southeasterly by the road to the beach and land formerly of Mrs. Horace Woodman; on the northeasterly side by the Saco River; and on the northwesterly side by land, now or formerly of J. B. Coolbroth.

For more particular description of the premises hereinabove last described, reference is made to decree of Supreme Judicial Court of Maine in the matter of Hanford E. Finney against claiments known and unknown dated October 3, 1919, and recorded in said York County Registry of Deeds, Book 671, Page 374.

All fixtures and articles of whatever nature permanently attached to said buildings are included in this conveyance.

TO HAVE AND TO HOLD the aforegranted and bargained premises, with all privileges and appurtenances thereof to the said The Franciscan Fathers of Maine, its successors or assigns, to its and their use and behoof forever.

AND it does COVENANT with the said Grantee, its successors or assigns, that it is lawfully seized in fee of the premises; that they are free of all encumbrances; that it has good right to sell and convey the same to the said Grantee to hold as aforesaid; and that it shall and will Warrant and Defend the same to the said Grantee, its successors or assigns forever, against the lawful claims and demands of all persons.

IN WITNESS WHEREOF, the said Couvent de la Presentation de Marie has caused this instrument to be executed and its corporate seal affixed thereto by - - its Treasurer, thereunto duly authorized, this eighteenth day of April, in the year of our Lord one thousand nine hundred and sixty-two.

Signed, Sealed and Delivered
in Presence of

Harold D. Carroll

COUVENT de la PRESENTATION de MARIE
(Corporate Seal)
By Sister St. Leon of Rome
Leona Lafleur
Its Treasurer, thereunto duly authorized.

Attachment 1 – Activity Description

The Biddeford Campus of the University of New England (UNE), Maine's largest private university, is positioned at the confluence of the Saco River and the Atlantic Ocean. This location, along with state-of-the-art research facilities and world-class faculty, has recently earned UNE's marine programs rankings among the top 10 nationally from *Biology Explorer*, *College Choice*, and *College Magazine*. To expand UNE's unique experiential learning and research opportunities in the marine ecosphere, the University is proposing the construction of a permanent pier which will serve as a four-season research deployment facility directly adjacent to the Arthur P. Girard Marine Science Center on its Biddeford campus

UNE's School of Marine and Environmental Programs, housed in the Girard Marine Science Center, is the academic home of 325 undergraduate and graduate students who are studying marine science, marine policy and management, as well as a wide variety of interdisciplinary fields, including marine ecosystems, conservation, restoration, business, sustainable fisheries and ecological aquaculture, social-ecological systems, and marine sustainability science. Additionally, two programs provide pathways from undergraduate to graduate degrees in Marine Sciences and Maritime Law (a 3+3 partnership with Maine Law).

Three things distinguish UNE's marine programs. The first is the oceanfront location on its core undergraduate campus, which provides direct access to the Gulf of Maine. The second is the multitude of research opportunities available to students starting as early as their first year of undergraduate studies. And the third is how the marine research done by UNE students and faculty directly impacts the people of Maine and beyond.

However, all three of these key assets are limited by the lack of year-round access to the ocean. ***The planned pier will allow students and faculty to be on the water throughout the year, thereby greatly enhancing UNE's groundbreaking research into critical problems facing Maine.***

The jewel of UNE's marine programs is Ram Island, UNE's private one-acre living laboratory two miles from campus in Saco Bay, which was gifted to the University in 2014. The island, which houses a fieldwork station and an experimental kelp farm, provides unparalleled research and field study opportunities for students and faculty. It also creates the potential to develop research partnerships that focus on critical issues facing Maine, making Ram Island home to coastal zone investigations of climate change, marine geology, invasive species, marine mammal ecology and interactions with fisheries and marine aquaculture.

Despite its prime location with direct access to the ocean, UNE currently has floating docks that are removed seasonally, precluding access to Ram Island and other areas of the Gulf of Maine in the critical winter and spring months. Construction of a permanent pier at UNE's Girard Marine Science Center will allow for dynamic, year-round, ocean-going research activities, facilitating scientific and practical exchanges with local, regional, and national marine researchers and industry partners. Additionally, the deep-water access would expand UNE's ability to serve as a collaboration hub for coastal marine and deep-water science and industry. As good stewards of the environment and our coastal neighbors, UNE is committed to ensuring that the planned structure fully adheres to local, state, and national regulations.

Investment in UNE's marine programs is good for Maine taxpayers. With the Gulf of Maine warming faster than almost any other body of water on the planet, marine research afforded by year-round access to the water will allow UNE to gather critical data to guide Maine's response to climate change. These expanded research opportunities will likewise enhance UNE's ability to ensure that its students graduate with the curiosity and experience to both ask and answer the important questions that will inform to the data-driven decisions impacting the expanding fields of aquaculture, fisheries, marine law and policy, marine business and entrepreneurship, ocean food systems, and related fields.

The University of New England (UNE) campus is located along the Saco River in Biddeford, ME. The Marine Science Center (MSC) at UNE is located on the waterfront at the easterly end of campus approximately opposite Camp Ellis in Saco. UNE is proposing to construct a pier from the shore into the Saco River to support MSC research activities and provide an all-tide access facility for small and shallow draft vessels.

The proposed facility includes the following:

1. A pile supported pier structure extending from shore into the Saco River. The proposed pier includes an approximately 130-foot long approach section extending from shore and an 80-foot long pier head section oriented roughly parallel to the direction of flow in the river. The pier consists of a concrete superstructure on steel pipe piles, with timber fender piles for vessel berthing and floating docks, and a pile supported gangway lifting beam to allow the gangway ramp to be temporarily removed from the water.
2. A floating dock system consisting of one 8-foot by 24-foot float, one 8-foot by 26-foot 10-inch float, and one 12-foot by 30-foot gangway landing float to provide all-tide vessel access for UNE's vessels on the west side of the pier, and a single 6-foot by 20-foot floating dock to provide a tie-up location for the City of Biddeford Fire Boat on the east side of the pier.
3. An 80-foot by 5-foot gangway to provide ADA compliant access to the float system.
4. An upland access road connecting the existing road at the MSC to the proposed pier, including associated site grading, drainage, and stormwater management features.

The proposed activities are described in detail in the following sections.

Pier Structure

The proposed vehicle rated pier is supported by twenty-five concrete filled steel pipe piles and a concrete abutment which connects the pier to the proposed access road. All of the piles are located beyond the HAT line, while the abutment is located shoreward of the HAT line. Fourteen, 24-inch diameter steel piles support the pier head portion of the structure and eleven, 16-inch diameter steel piles support the pier approach. The seven piles at the first three pile bents at the pier approach will be socketed to ledge due to a limited soil layer above the ledge surface at these locations. The remaining piles will be driven to ledge but do not require socketing given the sufficient depth of overburden soils. The piles support precast concrete pile caps which support precast concrete deck planks that form the pier deck surface.

The pier includes thirty, 12-inch diameter timber fender piles to provide for vessel berthing at the main face of the pier and to restrain the floating dock system. All new fender piles will be untreated timber, greenheart species. A gangway lifting beam is proposed to lift the gangway out of the water during float

maintenance or in advance of severe weather. The lifting beam is supported by a steel column anchored to the pier on one side and a 10.75-inch diameter concrete filled steel pipe pile on the other.

The total direct impact from all the piles that makeup the pier structure is 84 square feet. The total indirect impact from the pier footprint beyond the HAT line is 3,579 square feet.

Floating Dock System

The proposed floating dock system includes four floating docks. The three timber floats on the west side of the pier are new, while the single float on the east side of the pier is an existing float that wil be relocated from UNE's facility that is located upstream of the proposed pier (note that this facility is proposed to be demolished). The new floats consist of an 8-foot by 24-foot float, an 8-foot by 26-foot 10-inch angled float, and a 12-foot by 30-foot gangway landing float. All new floats will be located on the west side of the pier approach at the south side of the pier head. The existing float is 6-feet by 20-feet and will be located on the east side of the pier approach at the south side of the pier head to provide a tie-up location for the City of Biddeford Fire Boat. The new floats are accessed by the proposed gangway or a fixed ladder, and the fireboat float is accessed solely by a fixed ladder. All the floating docks are located beyond the MLLW line and will be restrained and guided by the timber fender piles. The floats will allow vessels to tie up to the pier at any time during the tide cycle. The total indirect impact from the floating dock system is 848 square feet.

Gangway

The 80-foot by 5-foot gangway provides ADA compliant access to the new floating dock system on the west side of the pier. The gangway connects to the pier near the beginning of the pier approach and lands on the 12-foot by 30-foot floating dock. The total indirect impact from the gangway is 357 square feet (this area excludes the portion of the gangway located above the floating dock).

Pier Buildings

Two pier buildings are proposed to be located on the pier head. At the southeast corner of the pier head is an 8-foot by 10-foot pier shed. This structure will provide storage for small equipment used by MSC staff, as well as an indoor protected location to house certain utility features such as electrical service panels. A 16-foot by 20-foot covered outdoor classroom is proposed on the west end of the pier head. This structure will provide a covered area for students and staff to carry out educational programming on the pier while protected from direct rain or sun exposure.

Access Road

Vehicular and pedestrian access to the pier will be provided by a new single-lane access road that will extend from the existing MSC access road and parking area, around the east side of the MSC building, and to the end of the pier approach. The access road has a 20-foot paved width with a single 16-foot wide lane and 2-foot wide paved shoulders. A turnaround area is provided adjacent the pier approach to allow for vehicles up to and including fire trucks accessing the pier to turn around and drive forward to exit the access road. There is no parking proposed adjacent to the pier. All parking will use the existing parking spaces adjacent to the MSC building. The new road will provide construction access for the project, which will help to limit the amount of work performed from the water and allow more staging to

be achieved from land. The upland work will include stormwater management features that have been designed to meet Maine DEP Chapter 500 standards.

Summary of Impacts

Table 1 provides a tabulation of direct and indirect impacts associated with the proposed facility.

Item		Indirect Impact (SF)	Direct Impact (SF)
1	Pier Structure		
	Pier Support Piles	---	59.3
	Fender Piles	---	24
	Gangway Lifting Beam Support Pile	---	0.6
	Pier Footprint Beyond HAT Line	3579	---
	Total	**3579**	**84**
2	Floating Dock System		
	8-foot by 24-foot float	192	---
	8-foot by 26-foot 10-inch angled float	175	---
	12-foot by 30-foot float	360	---
	6-foot by 20-foot fireboat float	120	---
	Total	**848**	---
3	Gangway		
	5-foot by 80-foot gangway	357	---
	Total	**357**	---
TOTAL IMPACT AREA		4784	84

Attachment 2 – Alternatives Analysis

The Plans provided in attachments 5 and 6 detail the preferred alternative. This design was arrived at after extensive study of alternative locations and layouts for the pier over multiple years time. Alternatives considered in developing the proposed project are briefly described below.

2008-2010 Pier Feasibility Study

In 2008-2010, UNE completed a concept planning study for the proposed pier. In this study, nine alternative designs were developed for water access facilities along the UNE waterfront consisting of various configurations of piers, boat ramps, and upland access and support facilities. The alternatives were evaluated on a range of criteria including technical criteria, functionality, constructability, regulatory impacts, cost of construction, and others to identify a preferred facility location. The nine alternatives evaluated through this study are shown in the figure below. At the conclusion of this study, Site 7 (directly in front of the Marine Science Center building) was identified as the preferred facility location to develop a new pier facility that would consist of a pile-supported pier extending from shore out into the Saco River. This location is optimal for access to and from the MSC facility and on the water, and allows for all-tide berthing with a smaller structure and less impact than several adjacent alternatives that were considered. At the conclusion of this study it was determined that Site 7 was the preferred alternative to move forward with further planning and design.

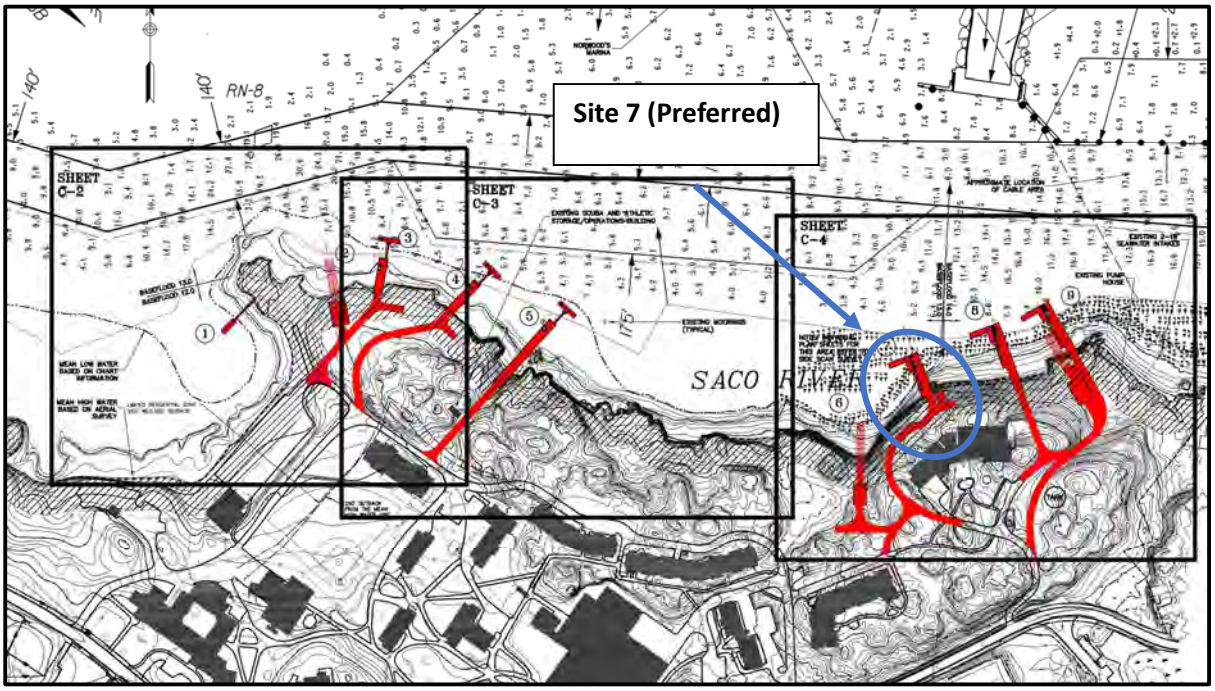

2015-2016 Pier Layout Study

After completion of the pier feasibility study described above, UNE undertook additional effort to study alternative pier layouts that would address the functional needs of the facility as well as the site exposure, berthing conditions, access requirements, and associated site impacts. During this study, numerous alternative pier layouts were considered which are depicted in the two figures that follow.

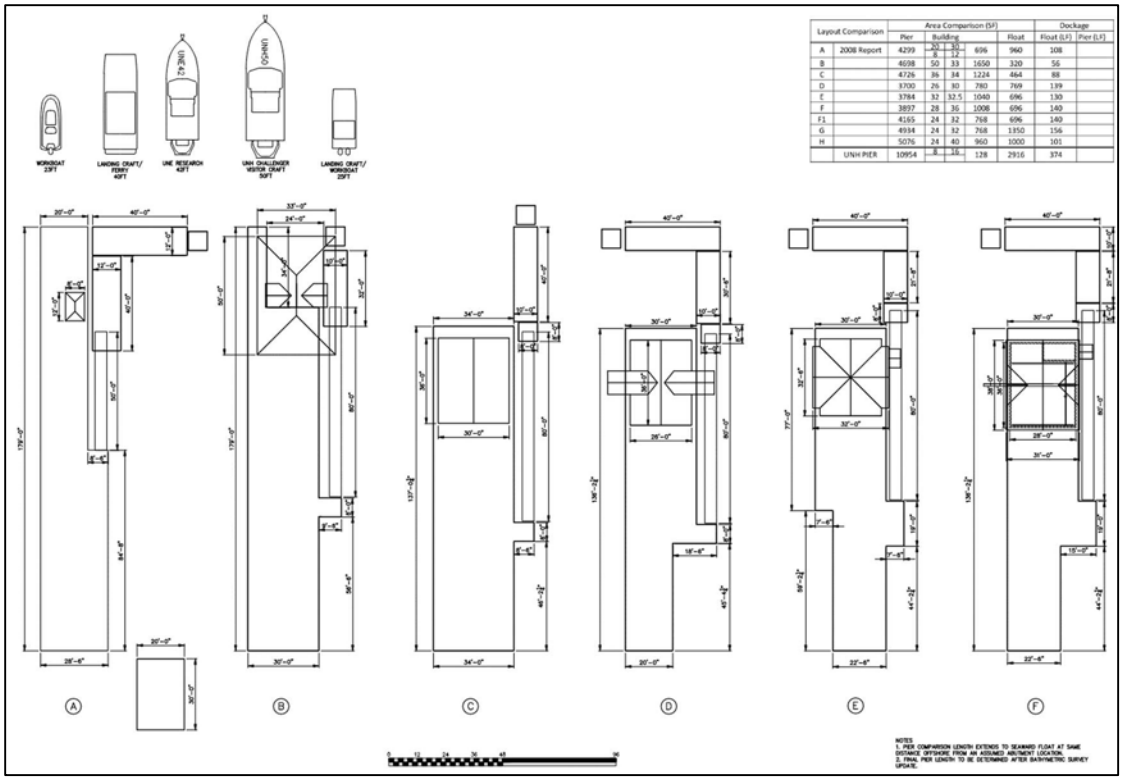

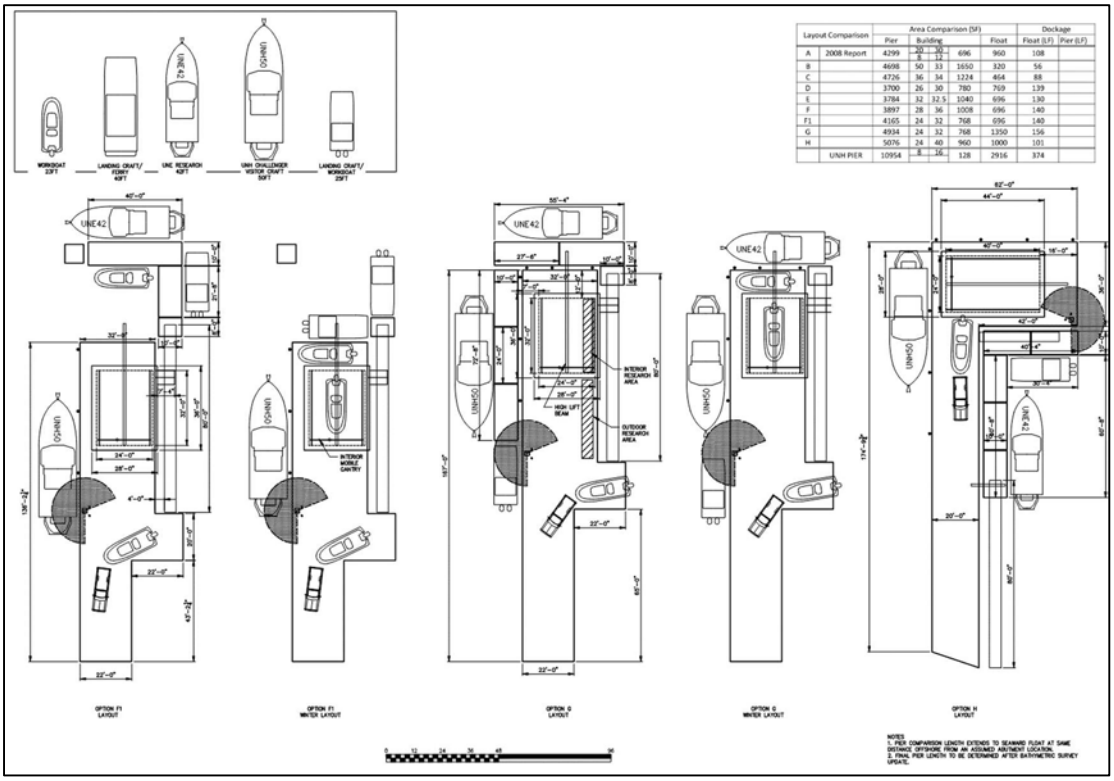

Further alternative development was completed in 2016 to address a realignment of the pier head parallel to the predominant direction of flow in the River for improved berth functionality. These alternatives considered input of the Biddeford Harbormaster and his knowledge of boating and

conditions on the Saco River after review of earlier layouts during a meeting in early 2016. The figure below depicts three alternatives considered during the study.

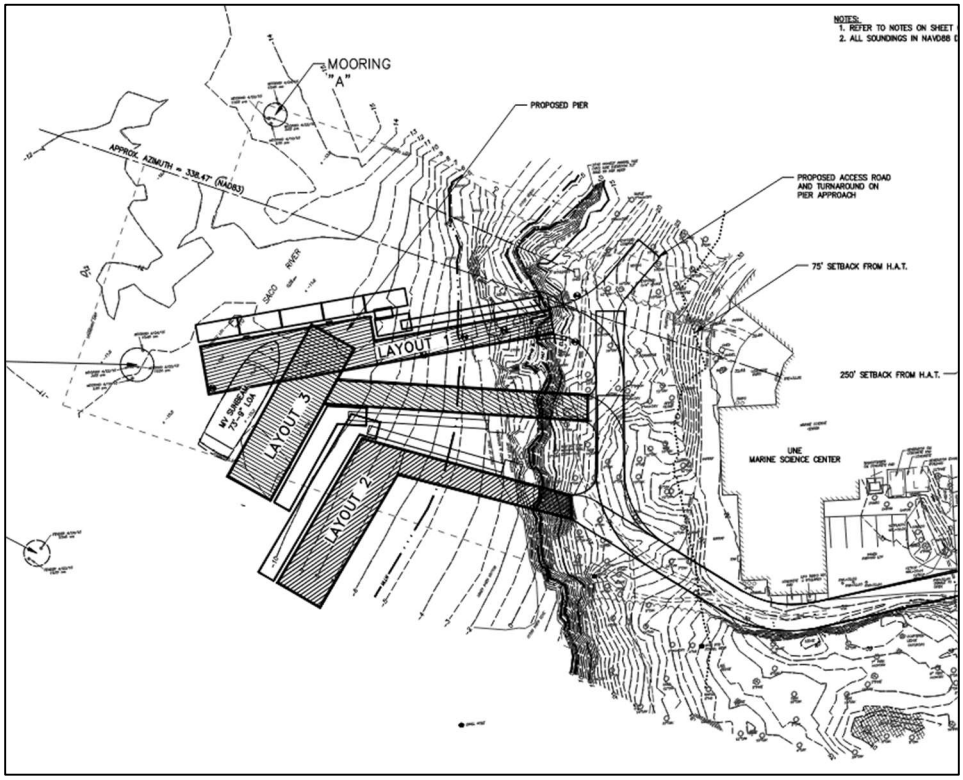

2023 Layout Refinement

During design refinement undertaken in 2023, the preferred alternative was identified as a combination of the pier approach from Layout 1, and the pier head from Layout 3, of the 2016 layout study. The Layout 1 pier approach represents the least impactful and most feasible option for upland site access. The Layout 3 pier head provides more desirable berthing conditions by aligning the main berth with flow directions in the River, and reaches sufficient depth to provide all-tide access for the range of vessels anticipated to use the facility. The layout was then refined somewhat to reduce the size of the structure to keep the dimensions to the minimum necessary to accomplish the functional goals of the project. During this refinement, the dimensions of the pier head were reduced from the initially proposed 28-feet wide by 100-feet long, to the currently proposed 23-feet 4 inches wide by 80-feet long. The dimensions of the float dock system were reduced somewhat, and the layout of fender piles was refined to reflect a functional design with minimum necessary dimensions and impacts.

The preferred alternative as currently presented represents a facility of the smallest dimensions possible to provide a functional facility that provides all-tide access for the range of vessels anticipated to use the facility, and ADA compliant access to the floating dock and gangway system and berthed vessels. While it could be possible to further reduce site impacts by further reducing the dimensions of the facility, any reduction beyond the size that is currently proposed would impact the proposed uses of the facility.

Do Nothing Alternative

A Do Nothing Alternative is the least impactful option, but would fail to address the goal of providing all-tide access to support UNE's marine research and educational programming through the marine science center. The existing seasonal floats and gangway located on the UNE campus upstream of the MSC building do not effectively meet these needs. Therefore, a Do Nothing alternative is not considered to be a feasible long-term solution.

ATTACHMENT 3 – LOCATION MAP

ATTACHMENT 3 - LOCATION MAP

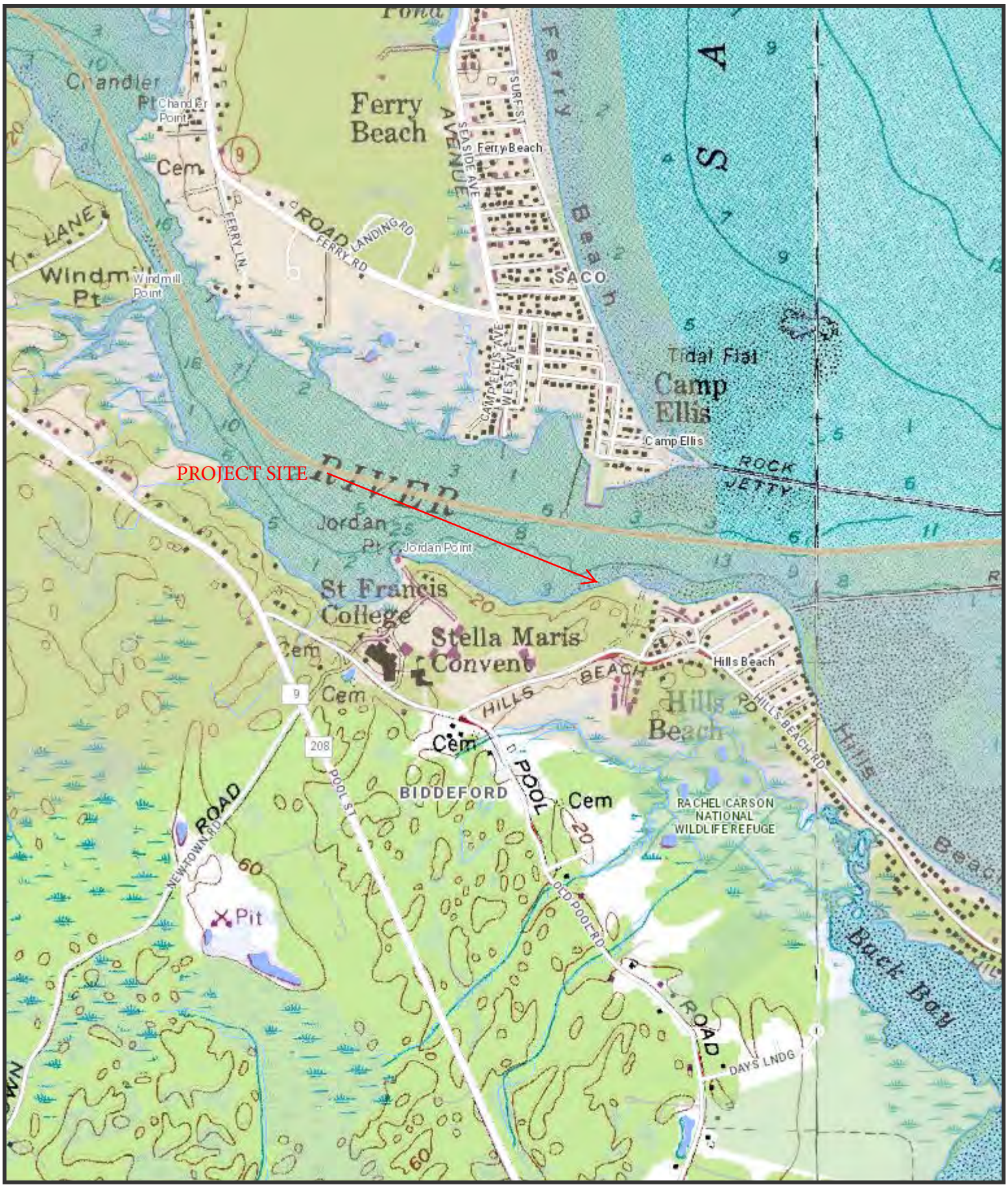

The Maine Department of Transportation provides this publication for information only. Reliance upon this information is at user risk. It is subject to revision and may be incomplete depending upon changing conditions. The Department assumes no liability if injuries or damages result from this information. This map is not intended to support emergency dispatch.

0.25 Miles

1 inch = 0.28 miles

Date: 6/8/2023
Time: 3:54:08 PM

ATTACHMENT 4 – PHOTOS



Looking down river



Looking down river.



At site.

ATTACHMENT 5/6 – PLANS

Attachment 7 – Construction Plan

Construction Access

The project occurs on a waterfront site along the Saco River. The proposed activities will require construction access by land and from water. Access by land will be by roads on the UNE campus. The new pier access road will be roughed-in early in the construction to provide an upland route for construction access, material deliveries, and staging. Access to the site by water will be by barge from the Saco River. The contractor will be directed to avoid impacts to the nearby federal navigation channel and adjacent waterfront facilities during site access. Short-term temporary impacts to the federal channel and adjacent facilities may be necessary during various stages of the project. The contractor will be directed to coordinate impacts with adjacent facility owners, the Biddeford and Saco Harbormasters, the Coast Guard, and the Army Corps of Engineers.

Construction Notices

The owner and/or owner's agent will notify abutting property owners when the work starts and will keep them informed of changes in project schedule.

Method of Construction

The work will require mobilization of marine construction equipment (barge, crane, tug, work boat), and upland construction equipment (earthmoving, concrete placement, paving). The pier design uses pre-fabricated components to the greatest extent possible to minimize the required onsite construction time. A summary of the construction process is provided below:

1. Contractor mobilization for upland construction.
2. Rough-in access road and install temporary erosion and sedimentation control measures.
3. Construct concrete pier abutment.
4. Contractor mobilization for marine construction.
5. Drive steel pipe piles.
6. Install precast concrete pile caps using barge mounted crane.
7. Install precast concrete deck planks using barge mounted crane.
8. Install timber fender piles and associated fendering components.
9. Install floating docks and gangway.
10. Complete construction of pier topside components including timber curbs, metal handrails, utilities, pier buildings, jib crane, and ancillary features.
11. Complete construction of access road including paving and permanent erosion and sedimentation control measures
12. Demobilize from site.

Construction Schedule

The construction is proposed to take place during winter 2024-2025. The construction is estimated to take 8-9 months to complete. It is anticipated that the start of upland construction will be scheduled in early fall to allow the access road to be roughed-in prior to the start of marine construction. Marine

construction will be completed in compliance with the standard November 8-April 9 in-water work window. All in-water work will be completed within this window. Topside work on the pier may extend beyond the end of the in-water work window. Final completion of the upland access road is anticipated to be in late spring to early summer 2025, as this will need to be timed to consider local road postings that may impact construction equipment and material access to the site.

ATTACHMENT 8 – EROSION CONTROL PLAN

Erosion control details and specifications are included on the project plans.

ATTACHMENT 9 – WETLAND DELINEATION REPORT/COASTAL WETLAND CHARACTERIZATION APPENDIX B

WETLAND SURVEY UPDATE
PROPOSED PIER MARINE SCIENCE CENTER
U.N.E. - BIDDEFORD, MAINE

Prepared for

SITE DESIGN ASSOCIATES



Prepared by

STATEWIDE SURVEYS, INC
SOIL SCIENTISTS & LAND SURVEYORS
35 Eastman Road, Cape Elizabeth, ME 04107
Phone: 207-767-4200

STATEWIDE SURVEYS, INC
SOIL SCIENTISTS & LAND SURVEYORS
35 Eastman Road, Cape Elizabeth, ME 04107
Website: www.statewidesurveys.com
Phone: 207-767-4200

WETLAND SURVEY UPDATE
PROPOSED PIER MARINE SCIENCE CENTER
U.N.E. - BIDDEFORD, ME.

REPORT CONTENT

1.0 PROJECT INTRODUCTION
2.0 PROJECT METHODOLOGY
3.0 PROJECT SUMMARY

APPENDIX A: PLAN (REDUCED)
APPENDIX B: WETLAND TOPOGRAPHIC PLAN (REDUCED)
APPENDIX C: PHOTOGRAPHS
APPENDIX D: NATIONAL WETLANDS INVENTORY MAP
APPENDIX E: NRCS SOIL MAP
APPENDIX F: F.E.M.A. FLOOD MAP
APPENDIX G: HIGHEST ASTRONOMICAL TIDE MAP
APPENDIX H: COASTAL SAND DUNE MAP

STATEWIDE SURVEYS, INC
SOIL SCIENTISTS & LAND SURVEYORS
35 Eastman Road, Cape Elizabeth, ME 04107
Website: www.statewidesurveys.com
Phone: 207-767-4200

April 9, 2023

Mr. Thomas Saucier
Site Design Associates
23 Whitney Way
Topsham, ME. 04086

WETLAND SURVEY UPDATE
PROPOSED PIER MARINE SCIENCE CENTER
U.N.E. - BIDDEFORD, ME.

Tom,

Please review the following updated Wetland Report for the proposed Pier at the University of New England (UNE) Marine Science Center.

1.0 PROJECT INTRODUCTION

As requested, this report is a summary of a 2023 review of prior wetland surveys for the proposed permanent Pier location at the UNE Marine Science Center in Biddeford originally completed on September 3 and 23, 2015. We have revisited the area several times since the first wetland survey for various efforts and the site is generally unchanged from the 2015 survey. We understand that the current proposed Pier location has shifted alignment slightly toward the northwest from the previous proposed alignment back in 2015. In 2023 the project area was expanded southerly of the 2015 wetland survey to the northerly end of Hill's Beach. We added Wetland D at the transition point from the rocky Saco River ledges to the sandy outwash of Hill's Beach. These areas are not in the immediate vicinity of the proposed Pier and should not be impacted by its construction.

The project area generally consists of uplands with shallow soils over bedrock above short and steep bedrock exposures (ledges) leading down and into the Saco River at some locations. Areas of shaly/gravelly soil exposures are intermixed with silty/sandy flats that are exposed at low tide along the base of these bedrock faces. We did not identify any wetland colonies within the proposed Pier limits however two small colonies of coastal wetland plants (Wetlands A & B) are located in the rocky beach along the original southerly project limits. There is a small "perched" wetland (Wetland C) lying in a narrow shelf of the bedrock cliff northerly of the proposed Pier location.

This spring (2023) we delineated a Coastal Wetland (Wetland D) southerly of the original survey area that was added to the original survey limits and approximately six hundred feet (±600') distant from the

proposed Pier Project. Wetland D is located at the northerly end of Hill's Beach at the transition spot from rocky shoreline along the Saco River to the sandy Hill's Beach.

Lastly, we also noted a small "pocket" of coastal wetlands approximately three hundred feet (±300') northerly of the original survey area. The National Wetlands Inventory (NWI) mapping closely resembles the wetland areas in this area and further described in the following.

2.0 PROJECT METHODOLOGY

We reviewed the Medium Intensity Soil Survey by the Natural Resource Conservation Service (NRCS), Maine G.I.S. website for Aerial Photography, Shorebird Feeding Habitat, Shorebird Roosting Habitat, U.S. Fish & Wildlife's National Wetland Inventory Maps, Topographic/Soundings Survey by Statewide Surveys, Inc and Owen Haskell, Inc, Wetlands/Deep Water Classifications by Cowardin and The Identification and Management of Significant Fish and Wildlife Resources in Southern Maine by the Maine Inland Fisheries and Wildlife and the Coastal Sand Dune Geology Map by the Maine Geological Survey prior to conducting the Wetland Survey.

The project limits were defined by Site Design Associates in 2015 and redefined in 2023. Relative site features were located within the project area using a Trimble® Geo-XH Global Positioning Unit (GPS). The wetlands were reviewed again during topographical and bathymetric surveys. We surveyed the site at low tide conditions during both visits in the spring of 2023 and back in 2015 to thoroughly examine and photograph the site within project limit for wetlands.

We also used hand tools to observe the limited soils available in both the uplands and river floodplain. We documented any clams, mussels and marine worms where soils were observed at intermittent locations within the Low, Mid and High Intertidal Zones. We did not identify any wetland vegetation within the proposed location for the new Pier. However, small wetland communities were documented and mapped where present within the project limits.

Typically, three wetland parameters are required with the Routine Method described in the 1987 U.S. Army Corps of Engineers (USACE) Wetland Delineation Manual and its Regional Supplement: North-Central and Northeast Region (Version 2). These environmental parameters include: the presence of hydric soils[1], the predominance of hydrophytes[2] and evidence of wetland hydrology[3].

1. *"Hydric" soils formed under conditions of saturation, flooding, or ponding long enough during the growing season to develop anaerobic conditions in the upper part (NEIWPCC).*
2. *"Hydrophytes" are plants growing in wetlands that have adapted in one way or another to life in permanently or periodically inundated or saturated soils (USACE).*
3. *"Hydrology" is permanent or periodic inundation, or soil saturation to the surface, at least seasonally is the driving forces behind wetland formation (USACE).*

The project area was expanded in 2023 to include more area southerly of the proposed pier site. We delineated a coastal wetland (Wetland D) along the southerly limits of the newly expanded project area. These coastal wetlands have alluvial and "hydric" soil conditions, presence of hydrology and a prevalence of hydrophytes thereby meeting the required wetland criteria identified in the USACE manual.

The three parameters are not all present at the proposed Pier location and we understand the site would

meet the Maine Department of Environmental Protection (MDEP) Shoreland Zoning-Coastal Wetlands. Specifically, lands below the HAT Line which is determined by elevation 6.6' NAVD-88. A wrack line is evident in the field which is a visual indicator of the daily high tide limits and likely slightly below the HAT elevation.

Coastal Wetlands are defined as: All tidal and sub-tidal areas, including all areas below any identifiable debris line left by tidal action; all areas with vegetation present that is tolerant of saltwater and occurs primarily in a salt water or estuarine habitat and any swamps, marsh, bog, beach, flat or other contiguous lowland which is subject to tidal action during the maximum spring tide level as identified in the tide tables published by the National Ocean Service (38 MRSA 480-B).

The 2015 Wetland Survey found small colonies of vegetation commonly found in Coastal Wetlands within the project limits, however these areas are not within the area for the proposed Pier. We designated these areas as Wetlands A, B and C and are all located below the HAT Line within the intertidal zone. We revisited the site in 2023 on two occasions to review wetlands in the expanded area lying southerly of the original project area. We added Coastal Wetlands "D" during these visits and the limits were located during topographical survey work.

Wetlands A & B

Both Wetland A (55 ft^2) & Wetland B (107ft^2) are two small stands of sparsely populated plant colonies that are nearly connected and located in the rocky beach southerly of the project area. The sparsely populated plant species included the sea lettuce (Ulva lactuca) along the water's edge, smooth cordgrass, a few orachs (Atriplex sp.), sea-shore goldenrods (Solidago sempervirens) with some scattered sea plantain. These areas are shallow to refusal in the rocky substrate with less than seven inches of alluvium (<7") consisting of shaly very dark graying brown sandy loams and loamy sands. Both areas are below the HAT line.

Wetland C

Wetland C (41 ft^2) is a small "perched" wetland located on a "shelf" in the ledge exposure northerly of the proposed pier location in the project area. The small area is also below the HAT Line and inhabited with a sparse plant community underlain with shallow alluvial soils. The small colony of herbaceous halophytes and/or hydrophytes are rooted into the shallow alluvial soils with daily tidal inundation being located below the obvious high tide line. The sparse and intermixed vegetation considered hydrophytes and halophytes included: sea lavender (Limonium carolinianum), smooth cordgrass (Spartina alterniflora), seaside goldenrod (Solidago sempervirens) and rockweed. This narrow area was not "flagged" for environmental reasons being underwater at times and flagging will not stand the tidal currents. Please see attached map for wetlands location.

Wetland D

Wetland D is a narrow Coastal Wetlands area along the Back Sand Dune of the reaches of Hill's Beach. This open ended area marginal wetland was added in 2023 with the expansion of the overall Project Limit. Wetland D has an evident wrack line with sparsely populated individual sea-shore goldenrods (Solidago sempervirens), cordgrass (Spartina alterniflora), american beach grass (Amnophila breviliguata) and raspberry (Rubus sp.) stems between the wrack line and upland vegetation. This area has slight characteristics of a back sand dune environment. The sparse vegetation is mainly between the principle

wrack line and the apparent HAT Line. This open ended wetland area begins where the rocky shoreline of the Saco River meets with the flat sands of the northern end of Hills Beach. Our first visit in 2023 found the area saturated from the previous high tide cycle and the wetland limits were readily apparent to the upland vegetation edge. The upland edges are inhabited with freshwater (palustrine) species including: sumac (Rhus sp.), honeysuckle (Lonicera sp.) and oaks (Quercus spp.).

Upland Characteristics

The site is generally gently sloping downward in an easterly direction toward the Saco River. We found the adjacent uplands to be consistent with the NRCS Soil Map where the NRCS identified the area with Lyman Rock-Outcrop Complex in the Soil Survey of York County, Maine. The upland soils are shallow to hard bedrock intermixed with bedrock exposures or outcroppings.

Mature trees are sparsely inhabiting the land in front of the Marine Science Center and the proposed Pier location. These trees include white oak (Quercus alba), red oak (Quercus rubrum) and shagbark hickories (Carya ovata). These hardwoods appear to be mature, however also appear somewhat stunted growth likely from the limited availability of nutrients in the shallow soils.

We did not observe any wildlife in the upland areas during the 2023 review, however there is evidence of remnant squirrel nut casings under the oak trees. In 2015 we observed some bird and animal species using the Saco River while on-site collecting data for the wetlands including: belted kingfisher (Ceryle alcyon), ring billed gull (Laurus delewarensis), great commorant (Phalacrocorax carbo) and a least sand piper (Calidris minutilla). We also observed some invasive green crabs (Carcinus maenas) and sand shrimp (Crongon septemspinosa) in the shallow water along the river's edge. We only observed a breeding (presumed) pair of canadian geese and a loon with winter plumage in 2023.

We did not identify any special wildlife resources such as nesting, rookeries, nesting sites, seal haul outs etc. We reviewed the MDEP website for Shorebird Feeding and Roosting Habitats. None were listed or identified at the proposed project area. Additionally, we referred to The Identification and Management of Significant Fish and Wildlife Resources in Southern Coastal Maine for resources in this area. The document identifies the mouth of the Saco River with Shorebird Feeding and Roosting Areas which is southerly of the project location.

3.0 PROJECT SUMMARY

The 2023 realignment location for the proposed Pier is very close to the 2015 area and along the same ledges as the original location. The 2023 alignment appears to be better positioned in relation to the shoreline and the Saco River flow from our site observations. The site generally consists of bedrock controlled uplands leading down to short steep bedrock cliffs and the rocky shoreline of the Saco River. We reviewed the project study area for wetland habitats as shown on the survey plan. The approximate high tide line is very evident with its intermittent "wrack" or debris line along the bedrock cliff exposures representing fluctuating water levels and tidal events.

The footprint area for the proposed Pier is nearly void of any vegetation except some rockweed (Fucus vesiculosus) along the lower parts of the rocky ledges in the mid-intertidal zone and above the Saco River and the low intertidal zone. The natural scouring effect of the fluctuating tides apparently limits plants with

an opportunity to anchor in the lower-intertidal zone or the subtidal river bottom.

We observed some very dark, mixed alluvial soils (deposited materials) below the apparent high tide lines and along the bottom of the bedrock cliffs and the Saco River's edge. Most of the alluvial soils where present are subtidal or just above being completely submerged at low tide and considered as hydric under flooded conditions. There are also small areas with shallow soil "pockets" that are intermixed among boulders and stones along the bedrock cliffs that "grade" down to mixed coarse and fine shales, gravels, sands and silts of the unconsolidated Saco River bottom.

We did not identify any typical coastal wetlands vegetation within the footprint area for the proposed Pier alignment. We understand that wetland regulations are in effect below the Highest Annual Tide of 6.6' NAVD-88 Datum where typical wetland vegetation is not present. We also understand regulatory setbacks (buffers) including the Shoreland Zone would originate above the HAT Line.

We noted another coastal wetland in the intertidal zone to the north of the project limits and not shown. This small wetland colony should not be impacted from the Pier installation. The NWI maps indicated these findings as well with coastal wetlands located both to the north and south of this project area. Both the north and southerly coastal wetlands have been designated as E2AB1N (Estuarine, intertidal, algae aquatic bed, regularly flooded & tidal fluctuation) on the NWI maps. The Saco River is designated as E1UBL (Estuarine, subtidal with unconsolidated bottom).

The project is subject to regulatory review being located within the Saco River floodplain and the Shoreland Zone at the State & Federal Level by the MDEP and the USACE. We understand regulatory setbacks would be measured from the HAT Line per elevation 6.6' NAVD-88 without a coastal wetland boundary to measure from. We also understand, permitting with the MDEP would be with the Mandatory Shoreland Zoning Act (MSZA) and typically required within 250' of the high water mark of a great pond or river, upland edge of a coastal wetland. We further understand that state regulations are in effect within 75' or 100' of the HAT line depending on the type and size of any proposed impacts to these areas.

We recommend reviewing the MDEP Natural Resources Protection Act (NRPA) Permit Applications and scheduling a Pre-Application meeting with the regulatory agencies to determine the required permits for the proposed permanent Pier. We understand that Resource Permits will be required for the permanent Pier within the intertidal zone and below the HAT Line. Areas below the HAT Line at the site meet the definition for Coastal Wetlands. Coastal Wetlands are also considered as "Wetlands of Special Significance" with the MDEP. Impacts to "Wetlands of Special Significance" could require offsetting mitigation depending on the size and type of impact. Lastly, additional permits with the MDEP are likely for any impacts are proposed in and adjacent to the Sand Dunes at Hill's Beach.

Wetlands are regulated also by the USACE under the provisions of Section 404 of the Clean Water Act below the HAT Line and navigable waters of the United States. The USACE may also review permit applications resulting from wetland impacts. We understand permits will be required to alter the wetland resources on-site below the HAT Line. The Corps will evaluate the Pier project and determine the appropriate permit/s required for impacts to Coastal Wetlands whether they are "Wetlands of Special Significance" or not with the MDEP.

The City of Biddeford also has a Code of Ordinances in effect with regulations over resources including the Saco River. The City should be consulted with regarding any local permits that may be required for work in or adjacent to the resource. This may require a UNE Representative to sign local permitting applications. A

MDEP or USACE or Biddeford Official may be required or helpful to determine the permit/s needed for the proposed project along the Saco River shoreline and working within the Shoreland Zone and its buffer. We can assist with environmental meetings with the City, MDEP or USACE if needed.

We further recommend contacting Dig-Safe for underground utility locations. An independent contractor may be necessary to mark utilities on private property. Lastly, we always recommend implementing Best Management Practices (BMP's), especially for stormwater and erosion control during and after construction until the site becomes stabilized and compliance with all environmental regulations during site work.

In the event you have any questions or need further assistance, please contact me using the office addresses provided or the office number at 207-767-4200.

Respectfully Submitted,

Dale A. Brewer
STATEWIDE SURVEYS, INC
Dale A. Brewer LSS/PLS
President

WETLAND SURVEY UPDATE
PROPOSED PIER MARINE SCIENCE CENTER
UNIVERSITY OF NEW ENGLAND
HILL'S BEACH ROAD, BIDDEFORD, ME.

APPENDIX - A
PROPOSED PIER PLANS
(REDUCED)



0 30 60
SCALE, FEET

ELEVATION	MLLW	NAVD88*
EPE	+10.0	+14.3
HAT	+11.6	+9.6
MHHW	+9.7	+4.7
MHW	+9.3	+4.3
MSL	+4.8	-0.2
MLW	+0.3	-4.7
MLLW	0.0	-5.0

*PROJECT DATUM

Attention:
If this scale bar does not measure 1" then drawing is not original scale.

DRAFT

Designed: DJB
Drawn: JAM
Checked: BJB
Approved:
P.E. No:
GEI Project 2203703

GEI Consultants
GEI CONSULTANTS, INC
3 BALEY STREET
PORTLAND, ME 04101
(207)797-8901

UNE
UNIVERSITY OF NEW ENGLAND
11 HILLS BEACH RD.
BIDDEFORD, MAINE

UNIVERSITY OF NEW ENGLAND
MARINE SCIENCE CENTER
PIER
11 HILLS BEACH ROAD
BIDDEFORD, MAINE

NO	DATE	ISSUE/REVISION	APP
2	2/15/2023	30% DESIGN SUBMISSION	DJB
1	12/9/2022	15% DESIGN SUBMISSIONREV	DJB
0	11/11/2022	15% DESIGN SUBMISSION	DJB

SHEET NAME: SITE PLAN
SHEET NO.: C-002

WETLAND SURVEY UPDATE
PROPOSED PIER MARINE SCIENCE CENTER
UNIVERSITY OF NEW ENGLAND
HILL'S BEACH ROAD, BIDDEFORD, ME.

APPENDIX - B
WETLAND SURVEY PLAN
(REDUCED)

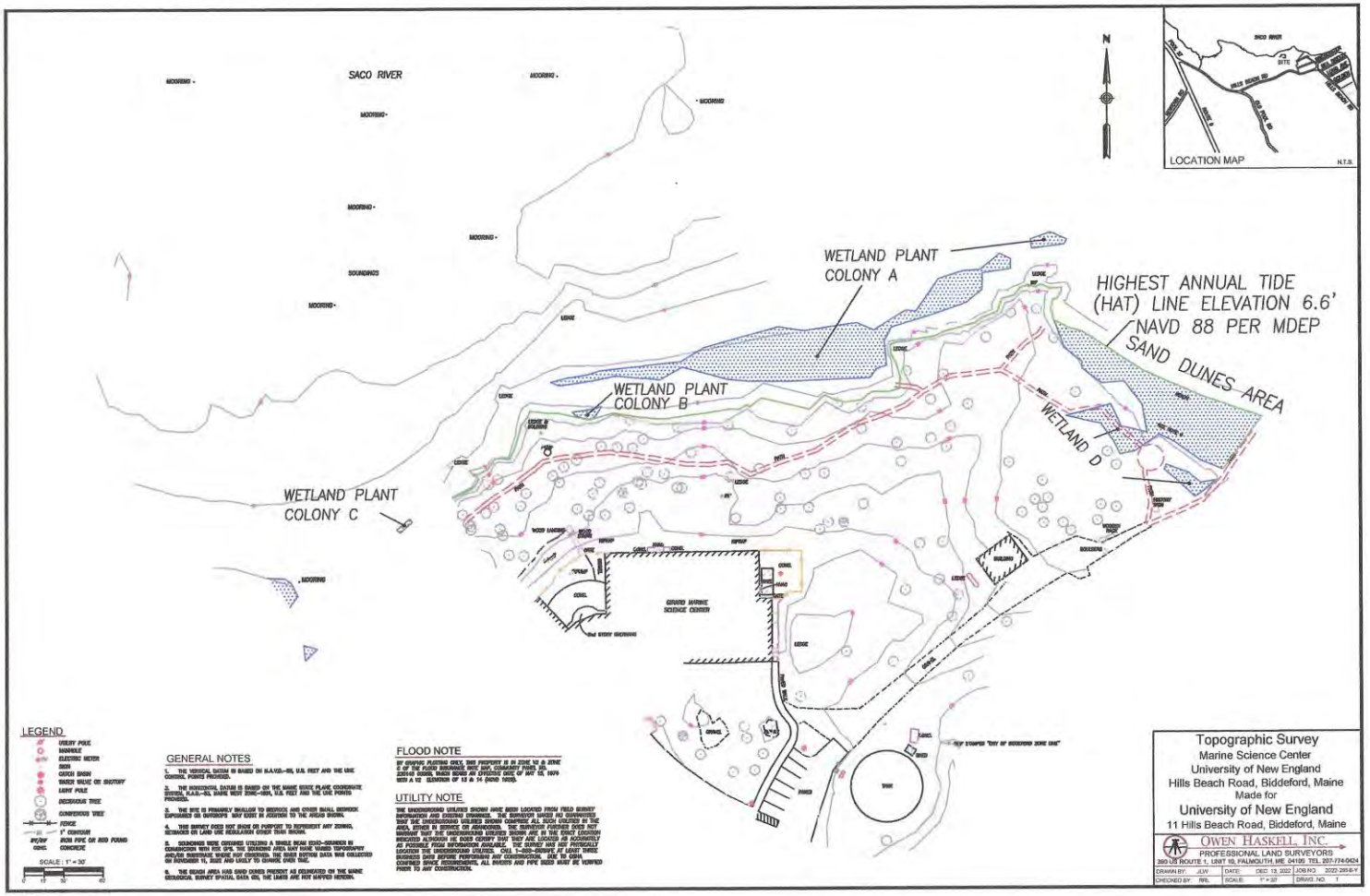
SACO RIVER
MOORING
SOUNDINGS
WETLAND PLANT COLONY A
WETLAND PLANT COLONY B
WETLAND PLANT COLONY C
HIGHEST ANNUAL TIDE (HAT) LINE ELEVATION 6.6' NAVD 88 PER MDEP
SAND DUNES AREA
WETLAND D
GRAVEL MARINE SCIENCE CENTER
LOCATION MAP
N.T.S.
LEGEND
GENERAL NOTES
FLOOD NOTE
UTILITY NOTE
Topographic Survey
Marine Science Center
University of New England
Hills Beach Road, Biddeford, Maine
Made for
University of New England
11 Hills Beach Road, Biddeford, Maine
OWEN HASKELL, INC.
PROFESSIONAL LAND SURVEYORS
DRAWN BY: JLW
DATE: DEC 13, 2022
JOB NO. 2022-295-6-Y
CHECKED BY: RRL
SCALE: 1" = 30'
DRWG. NO. 1

WETLAND SURVEY UPDATE
PROPOSED PIER MARINE SCIENCE CENTER
UNIVERSITY OF NEW ENGLAND
HILL'S BEACH ROAD, BIDDEFORD, ME.

APPENDIX - C
PHOTOGRAPHS



Photograph One. Photograph of the “perched” Wetland “A” located on a “shelf” in the side of the bedrock cliff. Photograph date: 09/03/2015.



Photograph Two. A westerly view of the original site for the proposed pier in 2015. Note the rocky shoreline transitions into a small gravelly sandy flat. The coastal low marsh wetlands in the background are beyond the survey area. Photo date: 09/03/2015.



Photograph Three. An easterly view of Wetland Plant Colony B and the rocky beach. Note the sparsely populated colonies of sea lavender, smooth cordgrasses, plantains, bladder rockweeds. Photograph date 09/03/2015.



Photograph Four. A photo from Wetland Plant Colony C and the rocky beach along the project limits. Note the sparsely populated colonies of sea plantains and Orachs. Photograph date 09/03/2015.



Photograph Five. A northwesterly view of the location for the proposed Pier. Note the line of tidal action on the ledges which is the approximate HAT Line. A narrow band of rockweeds along the bottom ledges and rocky shoreline. Photograph date 04/08/2023.



Photograph Six. A photo looking south at the proposed Pier location and lower, mid and high intertidal zones from the Saco River edge. Note the Girard Marine Science Center in the background. Photograph date 04/08/2023.



Photograph Seven. The mixed coarse and fines along the base of ledges at the proposed Pier site in the lower intertidal zone and above the silty sandy unconsolidated substrate of the Saco River. Photograph date 04/08/2023.



Photograph Eight. A photo of the mixed silty sandy gravelly (unconsolidated) Saco River bottom at the proposed Pier location in the subtidal zone. und. Photograph date 04/08/2023.



Photograph Nine. A easterly view along the Saco River and Wetland Plant Colony A at low tide along the shoreline. This area is approximately 200' southerly from the proposed Pier and should not be impacted from the Pier. Photograph date 04/08/2023.



Photograph Ten. A photo looking northwesterly at a portion of Coastal Wetland D along the back Sand Dune of the northern end of Hills Beach. Photograph date 04/08/2023.



Photograph Eleven. A soft shelled clam was found in the sandy cove approximately 100' northerly of the proposed Pier. This specimen was among other visible siphon breathing holes. Photograph date 04/08/2023.



Photograph Twelve. A marine worm found in the sandy cove approximately 100' northerly of the proposed Pier. This specimen was among other visible clam siphon breathing holes. Photograph date 04/08/2023.

WETLAND SURVEY UPDATE
PROPOSED PIER MARINE SCIENCE CENTER

UNIVERSITY OF NEW ENGLAND
HILL'S BEACH ROAD, BIDDEFORD, ME.

APPENDIX - D
NATIONAL WETLANDS INVENTORY
MAP

U.S. Fish and Wildlife Service

National Wetlands Inventory

UNE PIER

Sep 21, 2015



Wetlands

- Freshwater Emergent
- Freshwater Forested/Shrub
- Estuarine and Marine Deepwater
- Estuarine and Marine
- Freshwater Pond
- Lake
- Riverine
- Other

Riparian

- Herbaceous
- Forested/Shrub

Riparian Status

- Digital Data

This map is for general reference only. The US Fish and Wildlife Service is not responsible for the accuracy or currentness of the base data shown on this map. All wetlands related data should be used in accordance with the layer metadata found on the Wetlands Mapper web site.

User Remarks:

WETLAND SURVEY UPDATE
PROPOSED PIER MARINE SCIENCE CENTER
UNIVERSITY OF NEW ENGLAND
HILL'S BEACH ROAD, BIDDEFORD, ME.

APPENDIX - E
NRCS SOIL MAP

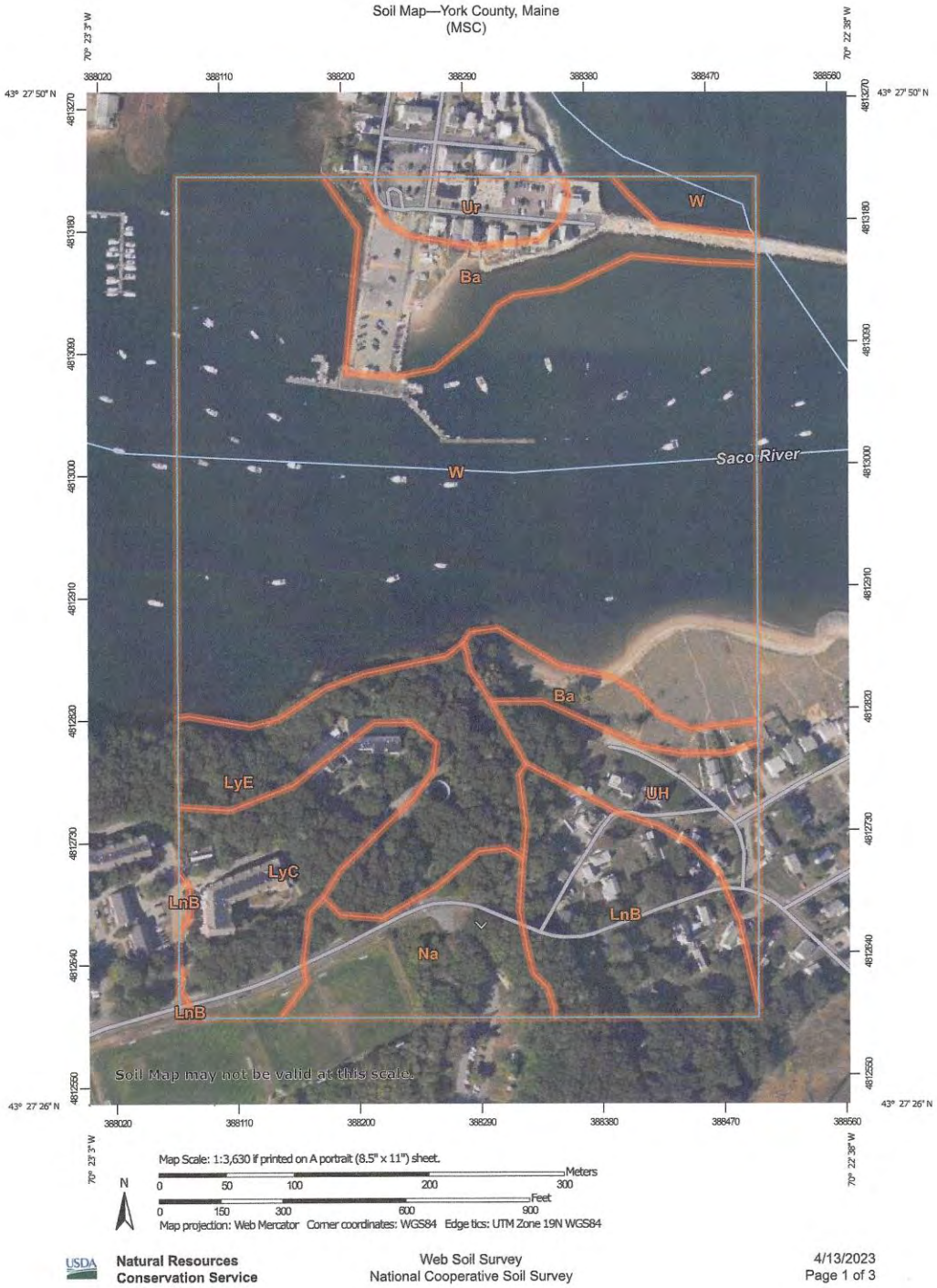

USDA Natural Resources Conservation Service

Web Soil Survey
National Cooperative Soil Survey

4/13/2023
Page 1 of 3

WETLAND SURVEY UPDATE
PROPOSED PIER MARINE SCIENCE CENTER
UNIVERSITY OF NEW ENGLAND
HILL'S BEACH ROAD, BIDDEFORD, ME.

APPENDIX - F
FLOOD MAP

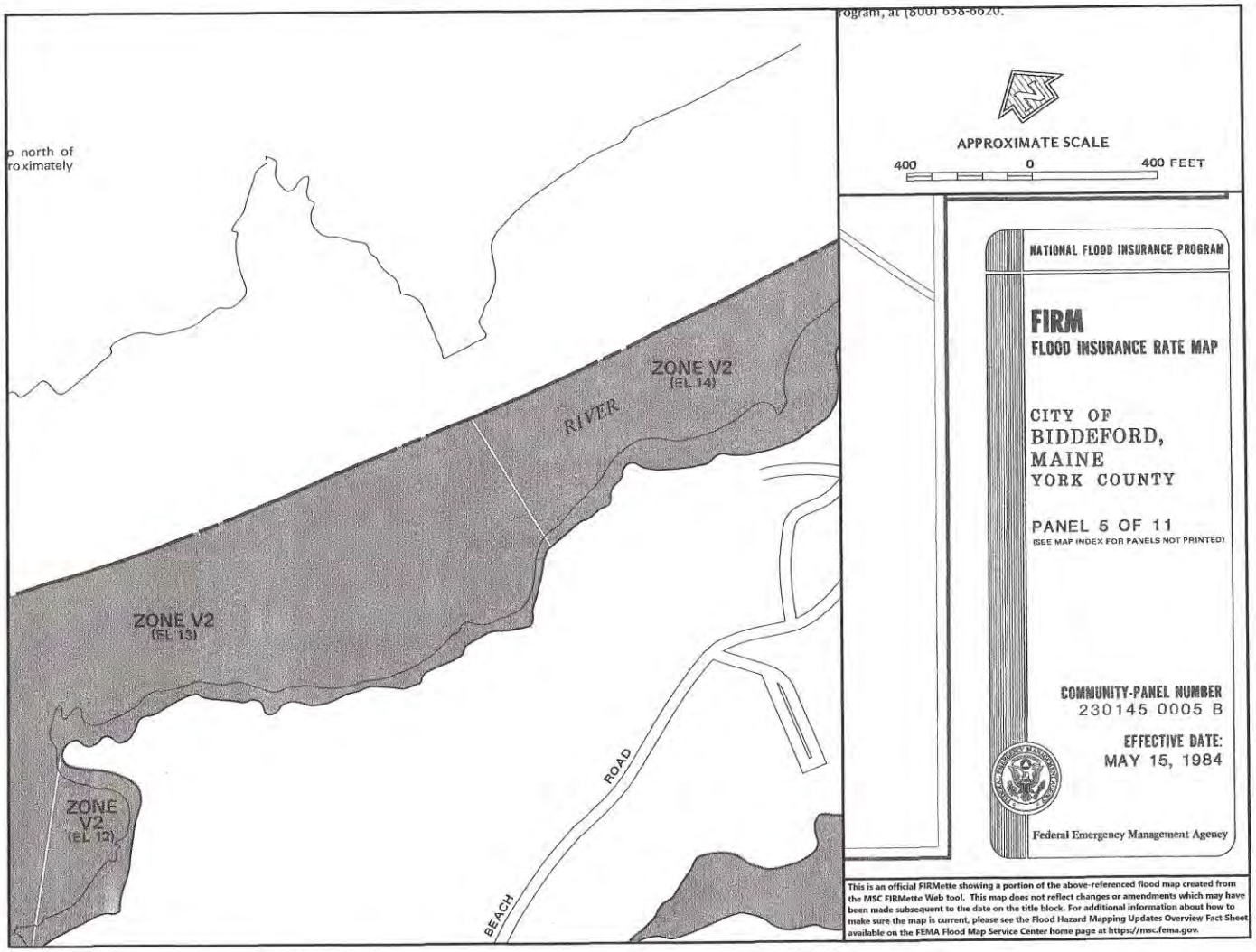
rogram, at (800) 638-8620.
o north of
roximately
APPROXIMATE SCALE
400 0 400 FEET
ZONE V2
(EL 14)
RIVER
ZONE V2
(EL 13)
ZONE
V2
(EL 12)
ROAD
BEACH
NATIONAL FLOOD INSURANCE PROGRAM
FIRM
FLOOD INSURANCE RATE MAP
CITY OF
BIDDEFORD,
MAINE
YORK COUNTY
PANEL 5 OF 11
(SEE MAP INDEX FOR PANELS NOT PRINTED)
COMMUNITY-PANEL NUMBER
230145 0005 B
EFFECTIVE DATE:
MAY 15, 1984
Federal Emergency Management Agency
This is an official FIRMette showing a portion of the above-referenced flood map created from the MSC FIRMette Web tool. This map does not reflect changes or amendments which may have been made subsequent to the date on the title block. For additional information about how to make sure the map is current, please see the Flood Hazard Mapping Updates Overview Fact Sheet available on the FEMA Flood Map Service Center home page at https://msc.fema.gov.

WETLAND SURVEY UPDATE
PROPOSED PIER MARINE SCIENCE CENTER
UNIVERSITY OF NEW ENGLAND
HILL'S BEACH ROAD, BIDDEFORD, ME.

APPENDIX - G
HIGHEST ASTRONOMICAL TIDE
MAP

Maine Geological Survey

Highest Astronomical Tide Line

To determine the estimated Highest Astronomical Tide elevation (in feet, NAVD88) and the tidal station used, simply click on coastline of interest.

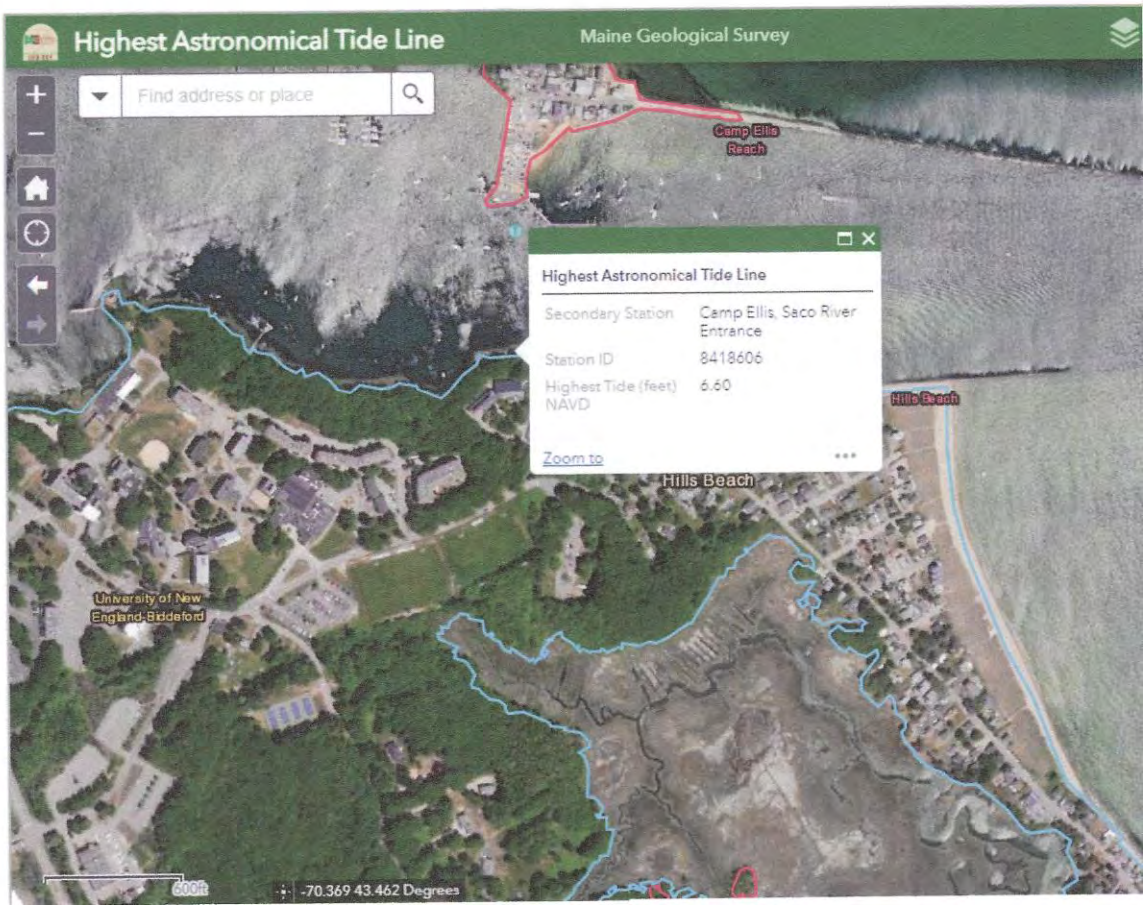

WETLAND SURVEY UPDATE
PROPOSED PIER MARINE SCIENCE CENTER
UNIVERSITY OF NEW ENGLAND
HILL'S BEACH ROAD, BIDDEFORD, ME.

APPENDIX - H
COASTAL SAND DUNE GEOLOGY



Maine Geological Survey

Address: 22 State House Station
Augusta, Maine 04333

Telephone: 207-287-2801
E-mail: mgs@maine.gov

Home page: http://www.maine.gov/doc/nrimc/nrimc.htm

See back for description of map units.

Coastal Sand Dune Geology

Hills Beach, Saco River, Biddeford, Maine

by Peter A. Slovinsky and Stephen M. Dickson

Open-File No. 11-107

2011

APPENDIX B: MDEP COASTAL WETLAND CHARACTERIZATION: INTERTIDAL & SHALLOW SUBTIDAL FIELD SURVEY CHECKLIST

NAME OF APPLICANT: UNIVERSITY NEW ENGLAND PHONE: 207 602 2253
APPLICATION TYPE: N.R.P.A.
ACTIVITY LOCATION: TOWN: BIDDEFORD COUNTY: YORK

ACTIVITY DESCRIPTION: ☐ fill ☒ pier ☐ lobster pound ☐ shoreline stabilization
☐ dredge ☐ other: PERMANENT PIER FOR RESEARCH

DATE OF SURVEY: 3/21/23 & 4/8/23 OBSERVER: DALE BREWER

TIME OF SURVEY: 7:00 - 8:15 A.M. TIDE AT SURVEY: LOW

SIZE OF DIRECT IMPACT OR FOOTPRINT (square feet):
Intertidal area: ± 1302 FT² Subtidal area: ± 5797 FT²

SIZE OF INDIRECT IMPACT, if known (square feet): ESTIMATED
Intertidal area: ± 221 FT² Subtidal area: ± 797 FT²

HABITAT TYPES PRESENT (check all that apply):
☐ sand beach ☒ boulder/cobble beach ☐ sand flat ☒ mixed coarse & fines ☐ salt marsh
☒ ledge ☒ rocky shore ☒ mudflat (sediment depth, if known: ____)

ENERGY: ☐ protected ☐ semi-protected ☐ partially exposed ☒ exposed

DRAINAGE: ☐ drains completely ☐ standing water ☐ pools ☒ stream or channel

SLOPE: ☐ >20% ☒ 10-20% ☐ 5-10% ☐ 0-5% ☐ variable

SHORELINE CHARACTER:
☒ bluff/bank (height from spring high tide: 6') ☐ beach ☒ rocky ☐ vegetated

FRESHWATER SOURCES: ☐ stream ☒ river ☐ wetland ☒ stormwater

MARINE ORGANISMS PRESENT:

	absent	occasional	common	abundant
mussels	☒	☐	☐	☐
clams	☒	☐	☐	☐
marine worms	☒	☐	☐	☐
rockweed	☐	☐	☒	☐
eelgrass	☒	☐	☐	☐
lobsters	☒	☐	☐	☐
other	☒	☐	☐	☐

SIGNS OF SHORELINE OR INTERTIDAL EROSION? ☐ yes ☒ no

PREVIOUS ALTERATIONS? ☐ yes ☒ no

CURRENT USE OF SITE AND ADJACENT UPLAND:
☒ undeveloped ☐ residential ☐ commercial ☐ degraded ☐ recreational

PLEASE SUBMIT THE FOLLOWING:
☒ Photographs ☒ Overhead drawing (pink)

ATTACHMENT 10 – NOTICE OF INTENT TO FILE

Portland Press Herald
Maine Sunday Telegram
pressherald.com

Classified Advertising Proof

Tom Saucier
Site Design Associates
23 Whitney Way

Topsham
Maine
04086
+1 (207) 449-4275

Thank you for placing your advertisement with us.

Your order information and a preview of your advertisement are attached below for your review. If there are changes or questions, please contact the classified department at (207) 791-6100

Thank you

(207) 791-6100 jjensen@mainetoday.com Monday – Friday 8:00 am – 5pm

Order Number	**0503081**	Order Price	**$458.75**
Sales Rep.	**Joan Jensen**	PO No.	**Notice of Intent to File / Tom Saucier**
Account	**30243**	Payment Type	**Invoice**

Publication	**Portland Press Herald**	Number of dates	**1**
First Run Date	**06/14/2024**	Last Run Date	**06/14/2024**

Publication	**Online Upsell PPH**	Number of dates	**1**
First Run Date	**06/14/2024**	Last Run Date	**06/14/2024**

Public Notice

NOTICE OF INTENT TO FILE

Please take notice that University of New England, 11 Hills Beach Road, Biddeford, Maine 04005 is intending to file a Natural Resources Protection Act permit application with the Maine Department of Environmental Protection pursuant

to the provisions of 38 M.R.S. §§ 480-A thru 480-BB on or about June 17, 2024. The application is for a permanent research pier with a ramp and floats at the following location: 11 Hills Beach Road, Biddeford, Maine 04005.A request for a public hearing or a request that the Board of Environmental Protection assume jurisdiction over this application must be received by the Department in writing, no later than 20 days after the application is found by the Department to be complete and is accepted for processing. A public hearing may or may not be held at the discretion of the Commissioner or Board of Environmental Protection. Public comment on the application will be accepted throughout the processing of the application. For Federally licensed, permitted, or funded activities in the Coastal Zone, review of this application shall also constitute the State's consistency review in accordance with the Maine Coastal Program pursuant to Section 307 of the federal Coastal Zone Management Act, 16 U.S.C. § 1456. The application will be filed for public inspection at the Department

of Environmental Protection's office in Portland during normal working hours. A copy of the application may also be seen at the municipal offices in Biddeford, Maine. Written public comments may be sent to the regional office in Portland where the application is filed for public inspection:

ATTACHMENT 11 – MHPC AND TRIBE LETTERS

MAINE HISTORIC PRESERVATION COMMISSION
55 CAPITOL STREET
65 STATE HOUSE STATION
AUGUSTA, MAINE
04333

JANET T. MILLS
GOVERNOR

KIRK F. MOHNEY
DIRECTOR

May 15, 2023

Mr. Tom Saucier, P.E.
Site Design Associates
23 Whitney Way
Topsham, Maine 04086

Project: MHPC# 0500-23 University of New England; 11 Hills Beach Road
Permanent Pier and Float System

Town: Biddeford, ME

Dear Mr. Saucier:

In response to your recent request, I have reviewed the information received April 13, 2023 to initiate consultation on the above referenced projects in accordance with Section 106 of the National Historic Preservation Act of 1966, as amended (NHPA).

Dr. Arthur Spiess of my staff has carefully reviewed our February 7, 2000 letter concerning areas of archaeological site significance on the UNE campus, and the Phase III report that formed the background of these recommendations. We note that some of the areas of the proposed access road and the head of the pier fall outside of the areas found not to be contributing to the overall significance of the archaeological site(s) on the UNE campus (specifically areas 99.1, 99.2 and 99.8. Moreover, the intensity of previous archaeological testing along the now-proposed access road (especially within area 99.1).

Based on the information submitted, I have concluded that the proposed work will have **no adverse effect** upon historic properties.

However, our finding is *conditional* upon the following:

1) We recommend that one or more archaeologists monitor the initial clearing of soil from the route of the access road and be allowed enough time to recover information from any subsoil features that are present. It would be most important to monitor the access road from the curve in the road to be located just east of the north wall of the marine science center to the head of the proposed pier.

Please contact Megan M. Rideout at (207) 287-2992 or megan.m.rideout@maine.gov if we can be of further assistance in this matter.

Sincerely,

Kirk F. Mohney

Kirk F. Mohney
State Historic Preservation Officer

PHONE: (207) 287-2132 FAX: (207) 287-2335



U.S. Postal Service™
CERTIFIED MAIL® RECEIPT
Domestic Mail Only
For delivery information, visit our website at www.usps.com®.
Perry, ME 04667
OFFICIAL USE
Certified Mail Fee $4.15
$3.35
Extra Services & Fees (check box, add fee as appropriate)
Return Receipt (hardcopy) $0.00
Return Receipt (electronic) $0.00
Certified Mail Restricted Delivery $0.00
Adult Signature Required $0.00
Adult Signature Restricted Delivery $
Postage $0.87
Total Postag $8.37
Sent To Passamaquoddy Tribe of Indians
Street and Ap Pleasant Point Reservation
City, State, Z PO Box 343
Perry, ME 04667
0086 7
Postmark Here
04/11/2023
THPO
PS Form 3800, April 2015 PSN 7530-02-000-9047 See Reverse for Instructions
7022 1670 0001 0356 2178

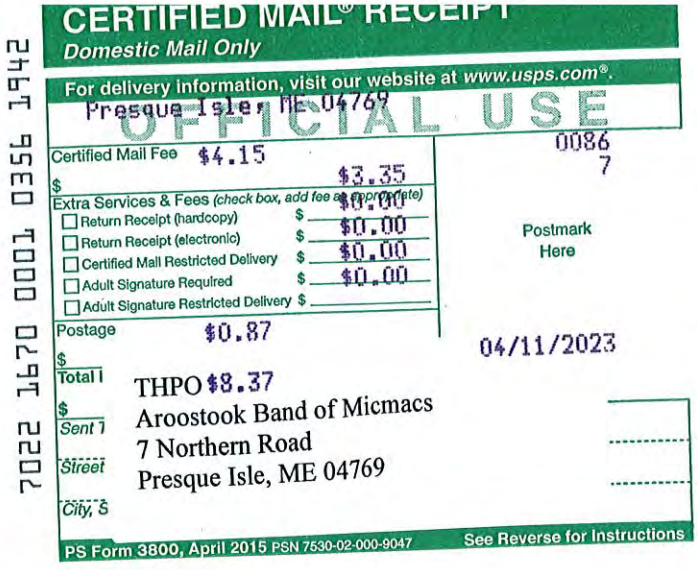

U.S. Postal Service™
CERTIFIED MAIL® RECEIPT
Domestic Mail Only
For delivery information, visit our website at www.usps.com®.
Presque Isle, ME 04769
OFFICIAL USE
Certified Mail Fee $4.15
$3.35
Extra Services & Fees (check box, add fee as appropriate)
Return Receipt (hardcopy) $0.00
Return Receipt (electronic) $0.00
Certified Mail Restricted Delivery $0.00
Adult Signature Required $0.00
Adult Signature Restricted Delivery $
Postage $0.87
Total I $8.37
Sent T Aroostook Band of Micmacs
Street 7 Northern Road
City, S Presque Isle, ME 04769
0086 7
Postmark Here
04/11/2023
THPO
PS Form 3800, April 2015 PSN 7530-02-000-9047 See Reverse for Instructions
7022 1670 0001 0356 1942

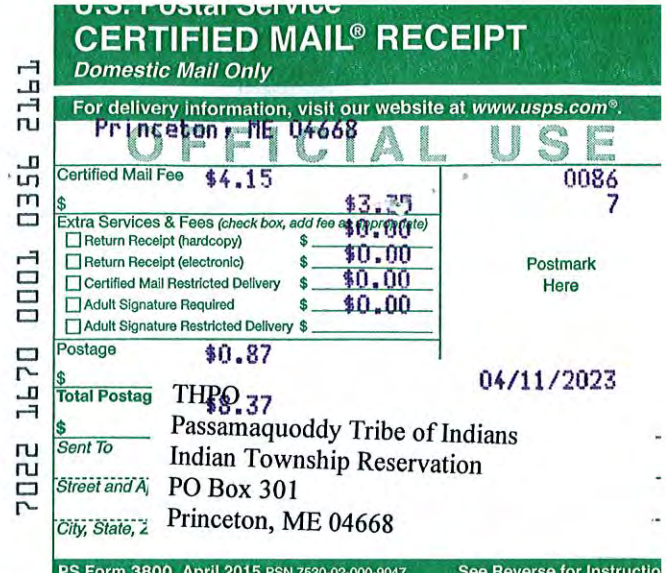

U.S. Postal Service™
CERTIFIED MAIL® RECEIPT
Domestic Mail Only
For delivery information, visit our website at www.usps.com®.
Princeton, ME 04668
OFFICIAL USE
Certified Mail Fee $4.15
$3.35
Extra Services & Fees (check box, add fee as appropriate)
Return Receipt (hardcopy) $0.00
Return Receipt (electronic) $0.00
Certified Mail Restricted Delivery $0.00
Adult Signature Required $0.00
Adult Signature Restricted Delivery $
Postage $0.87
Total Postag $8.37
Sent To Passamaquoddy Tribe of Indians
Street and A Indian Township Reservation
City, State, Z PO Box 301
Princeton, ME 04668
0086 7
Postmark Here
04/11/2023
THPO
PS Form 3800, April 2015 PSN 7530-02-000-9047 See Reverse for Instructio
7022 1670 0001 0356 2161

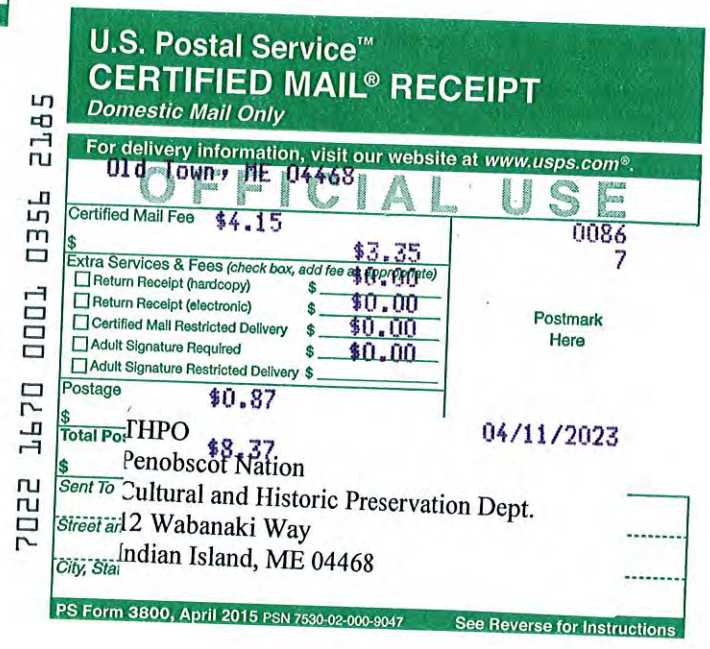

U.S. Postal Service™
CERTIFIED MAIL® RECEIPT
Domestic Mail Only
For delivery information, visit our website at www.usps.com®.
Old Town, ME 04468
OFFICIAL USE
Certified Mail Fee $4.15
$3.35
Extra Services & Fees (check box, add fee as appropriate)
Return Receipt (hardcopy) $0.00
Return Receipt (electronic) $0.00
Certified Mail Restricted Delivery $0.00
Adult Signature Required $0.00
Adult Signature Restricted Delivery $
Postage $0.87
Total Po $8.37
Sent To Penobscot Nation
Street an 12 Wabanaki Way
City, Sta Indian Island, ME 04468
0086 7
Postmark Here
04/11/2023
THPO
PS Form 3800, April 2015 PSN 7530-02-000-9047 See Reverse for Instructions
7022 1670 0001 0356 2185

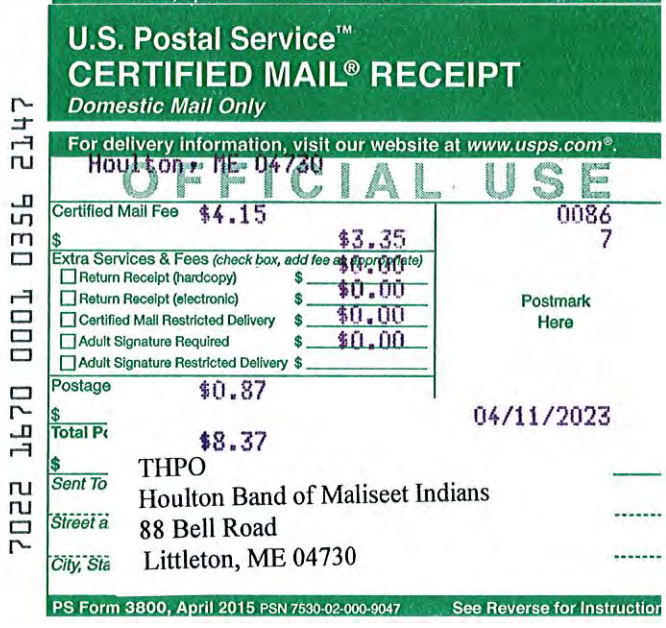

U.S. Postal Service™
CERTIFIED MAIL® RECEIPT
Domestic Mail Only
For delivery information, visit our website at www.usps.com®.
Houlton, ME 04730
OFFICIAL USE
Certified Mail Fee $4.15
$3.35
Extra Services & Fees (check box, add fee as appropriate)
Return Receipt (hardcopy) $0.00
Return Receipt (electronic) $0.00
Certified Mail Restricted Delivery $0.00
Adult Signature Required $0.00
Adult Signature Restricted Delivery $
Postage $0.87
Total Pc $8.37
Sent To Houlton Band of Maliseet Indians
Street a 88 Bell Road
City, Sta Littleton, ME 04730
0086 7
Postmark Here
04/11/2023
THPO
PS Form 3800, April 2015 PSN 7530-02-000-9047 See Reverse for Instruction
7022 1670 0001 0356 2147

Site Design Associates
Consulting Engineering and Land Planning

April 10, 2023

THPO and Environmental Planner
Houlton Band of Maliseet Indians
88 Bell Road
Littleton, Maine 04730

RE: Proposed Marine Science Center Pier
11 Hills Beach Road
Biddeford, Maine

On behalf of our client, University of New England (UNE), we are assisting with the preparation of Maine Department of Environmental Protection Natural Resources Protection Act and U.S. Army Corps of Engineers Permit applications. The applications are for the installation of a permanent pier and float system on UNE's campus at 11 Hills Beach Road in Biddeford.

This letter and the enclosed materials serve as a means to notify you of the project and give you an opportunity to determine whether the proposed development would affect properties of religious and/or cultural significance. If the Tribe has concerns in this area, please notify us by letter to the address below, contact me at 207-449-4275 or via email at tsaucier@sitedesignassociates.biz.

Thank you for your assistance and the generosity of your time to review this project in reference to the Tribe's concerns.

Sincerely,

Site Design Associates

Tom Saucier, P.E.
President

Enclosures

23 Whitney Way Topsham, Maine 04086
Phone: (207) 449-4275 email: info@sitedesignassociates.biz

Site Design Associates
Consulting Engineering and Land Planning

April 10, 2023

THPO
Aroostook Band of Micmacs
7 Northern Road
Presque Isle, ME 04769

RE: Proposed Marine Science Center Pier
11 Hills Beach Road
Biddeford, Maine

On behalf of our client, University of New England (UNE), we are assisting with the preparation of Maine Department of Environmental Protection Natural Resources Protection Act and U.S. Army Corps of Engineers Permit applications. The applications are for the installation of a permanent pier and float system on UNE's campus at 11 Hills Beach Road in Biddeford.

This letter and the enclosed materials serve as a means to notify you of the project and give you an opportunity to determine whether the proposed development would affect properties of religious and/or cultural significance. If the Tribe has concerns in this area, please notify us by letter to the address below, contact me at 207-449-4275 or via email at tsaucier@sitedesignassociates.biz.

Thank you for your assistance and the generosity of your time to review this project in reference to the Tribe's concerns.

Sincerely,

Site Design Associates

Tom Saucier, P.E.
President

Enclosures

23 Whitney Way Topsham, Maine 04086
Phone: (207) 449-4275 email: info@sitedesignassociates.biz

Site Design Associates
Consulting Engineering and Land Planning

April 10, 2023

THPO
Passamaquoddy Tribe of Indians
Pleasant Point Reservation
PO Box 343
Perry, Maine 04667

RE: Proposed Marine Science Center Pier
11 Hills Beach Road
Biddeford, Maine

On behalf of our client, University of New England (UNE), we are assisting with the preparation of Maine Department of Environmental Protection Natural Resources Protection Act and U.S. Army Corps of Engineers Permit applications. The applications are for the installation of a permanent pier and float system on UNE's campus at 11 Hills Beach Road in Biddeford.

This letter and the enclosed materials serve as a means to notify you of the project and give you an opportunity to determine whether the proposed development would affect properties of religious and/or cultural significance. If the Tribe has concerns in this area, please notify us by letter to the address below, contact me at 207-449-4275 or via email at tsaucier@sitedesignassociates.biz.

Thank you for your assistance and the generosity of your time to review this project in reference to the Tribe's concerns.

Sincerely,

Site Design Associates

Tom Saucier, P.E.
President

Enclosures

23 Whitney Way Topsham, Maine 04086
Phone: (207) 449-4275 email: info@sitedesignassociates.biz

Site Design Associates
Consulting Engineering and Land Planning

April 10, 2023

THPO
Passamaquoddy Tribe of Indians
Indian Township Reservation
PO Box 301
Princeton, Maine 04668

RE: Proposed Marine Science Center Pier
11 Hills Beach Road
Biddeford, Maine

On behalf of our client, University of New England (UNE), we are assisting with the preparation of Maine Department of Environmental Protection Natural Resources Protection Act and U.S. Army Corps of Engineers Permit applications. The applications are for the installation of a permanent pier and float system on UNE's campus at 11 Hills Beach Road in Biddeford.

This letter and the enclosed materials serve as a means to notify you of the project and give you an opportunity to determine whether the proposed development would affect properties of religious and/or cultural significance. If the Tribe has concerns in this area, please notify us by letter to the address below, contact me at 207-449-4275 or via email at tsaucier@sitedesignassociates.biz.

Thank you for your assistance and the generosity of your time to review this project in reference to the Tribe's concerns.

Sincerely,

Site Design Associates

Tom Saucier, P.E.
President

Enclosures

23 Whitney Way Topsham, Maine 04086
Phone: (207) 449-4275 email: info@sitedesignassociates.biz

Site Design Associates
Consulting Engineering and Land Planning

April 10, 2023

THPO
Penobscot Nation
Cultural and Historic Preservation Dept.
12 Wabanaki Way
Indian Island, Maine 04468

RE: Proposed Marine Science Center Pier
11 Hills Beach Road
Biddeford, Maine

On behalf of our client, University of New England (UNE), we are assisting with the preparation of Maine Department of Environmental Protection Natural Resources Protection Act and U.S. Army Corps of Engineers Permit applications. The applications are for the installation of a permanent pier and float system on UNE's campus at 11 Hills Beach Road in Biddeford.

This letter and the enclosed materials serve as a means to notify you of the project and give you an opportunity to determine whether the proposed development would affect properties of religious and/or cultural significance. If the Tribe has concerns in this area, please notify us by letter to the address below, contact me at 207-449-4275 or via email at tsaucier@sitedesignassociates.biz.

Thank you for your assistance and the generosity of your time to review this project in reference to the Tribe's concerns.

Sincerely,

Site Design Associates

Tom Saucier, P.E.
President

Enclosures

23 Whitney Way Topsham, Maine 04086
Phone: (207) 449-4275 email: info@sitedesignassociates.biz

PENOBSCOT NATION
CULTURAL & HISTORIC PRESERVATION
12 WABANAKI WAY, INDIAN ISLAND, ME 04468

CHRIS SOCKALEXIS – TRIBAL HISTORIC PRESERVATION OFFICER
E-MAIL: chris.sockalexis@penobscotnation.org

NAME	Tom Saucier
ADDRESS	Site Design Associates 23 Whitney Way Topsham, ME 04086
OWNER'S NAME	University of New England
TELEPHONE	201-449-4275
EMAIL	tsaucier@sitedesignassociates.biz
PROJECT NAME	Marine Science Center Pier – 11 Hills Beach Road
PROJECT SITE	Biddeford, ME
DATE OF REQUEST	April 10, 2023
DATE REVIEWED	October 19, 2023

Thank you for the opportunity to comment on the above referenced project. This project appears to have no impact on a structure or site of historic, architectural or archaeological significance to the Penobscot Nation as defined by the National Historic Preservation Act of 1966, as amended.

If there is an inadvertent discovery of Native American cultural materials during the course of the project, please contact my office at (207) 817-7471. Thank you for consulting with the Penobscot Nation Tribal Historic Preservation Office with this project.

Chris Sockalexis, THPO
Penobscot Nation

ATTACHMENT 12 – MDEP VISUAL EVALUATION FIELD SURVEY CHECKLIST APPENDIX A

APPENDIX A: MDEP VISUAL EVALUATION
FIELD SURVEY CHECKLIST
(Natural Resources Protection Act, 38 M.R.S. §§ 480 A - Z)

Name of applicant: University of New England Phone: 207-602-2365

Application Type: NRPA

Activity Type: (brief activity description) Pier, gangway and float

Activity Location: Town: Biddeford County: York

GIS Coordinates, if known: _____ _____

Date of Survey: 05/01/23 Observer: Tom Saucier Phone: 207-449-4275

1. Would the activity be visible from:	**Distance Between the Proposed Visibility Activity and Resource (in Miles)** 0-¼	¼-1	1+
A. A National Natural Landmark or other outstanding natural feature?	☐	☐	☒
B. A State or National Wildlife Refuge, Sanctuary, or Preserve or a State Game Refuge?	☐	☐	☒
C. A state or federal trail?	☐	☐	☒
D. A public site or structure listed on the National Register of Historic Places?	☐	☐	☒
E. A National or State Park?	☐	☐	☒
F. 1) A municipal park or public open space?	☐	☐	☒
2) A publicly owned land visited, in part, for the use, observation, enjoyment and appreciation of natural or man-made visual qualities?	☐	☐	☒
3) A public resource, such as the Atlantic Ocean, a great pond or a navigable river?	☒	☐	☐
2. What is the closest estimated distance to a similar activity?	☒	☐	☐
3. What is the closest distance to a public facility intended for a similar use?	☐	☐	☒

4. Is the visibility of the activity seasonal? ☐Yes ☒No
(i.e., screened by summer foliage, but visible during other seasons)

5. Are any of the resources checked in question 1 used by the public during the time of year during which the activity will be visible? ☒Yes ☐No

A listing of National Natural Landmarks and other outstanding natural features in the State of Maine can be found at: www.nature.nps.gov/nnl/Registry/USA_map/states/Maine/maine.htm . In addition, unique natural areas are listed in the Maine Atlas and Gazetteer published by DeLorme.

(pink)

ATTACHMENT 13 – PROJECT DESCRIPTION WORKSHEET APPENDIX D

Natural Resource Protection Act Application

APPENDIX D: Project Description Worksheet for a Dock, Pier or Wharf Application.

Help us process your application more efficiently by completing this worksheet, which is supplemental to a NRPA application for a dock, pier or wharf. A completed Appendix D may be substituted for Block 14 of the application page.

THIS IS AN APPLICATION FOR A.....

☐ Commercial wharf

If yes, indicate type of commercial activity: _____

License number: _____

Number of fishermen using this wharf: _____

☐ Public pier, dock or wharf

☐ Common or shared recreational pier, dock or wharf

☐ Private recreational pier, dock or wharf

☐ Expansion or modification of an existing structure

☒ Other, please indicate: Research pier, gangway, and floats

TELL US ABOUT YOUR BOAT....

My boat(s) requires a draft of up to 5 feet.

My boat(s) is 60' max feet long.

TELL US ABOUT YOUR PROJECT SITE.... For coastal piers and wharves, please complete Appendix B of the NRPA application. For freshwater docks, please describe the substrate and any vegetation: See appendix B

SCENIC CONSIDERATIONS... Please complete Appendix A of the NRPA application.

WHAT FACILITIES ARE NEARBY?

The nearest public boat launch is located in Biddeford (town) approximately 2 (distance) miles from the project location.

The nearest public, commercial, or private marina is located in Saco (town) approximately 0.04 (distance) miles from the project location.

☐ I have inquired about slip or mooring availability at the nearest marina or public facility.

☐ Yes, a slip or mooring is available. ☐ No, a slip or mooring is not available.

Approximate expected time on waiting list: _____

☒ I have contacted the local Harbor Master.

Name: University of New England Phone: 207-602-2365

I currently use the following for my boat: ☐ Mooring ☐ Marina

TELL US ABOUT YOUR PROPOSED PIER, DOCK OR WHARF...

MATERIALS:

☒ The structure will be supported by pilings.
14 pilings of 24 inches in diameter
and 11 pilings of 16 inches in diameter

☐ The structure will be supported by stacked, flow-through granite cribs.
_____ blocks, measuring _____ feet by _____ feet

☐ The structure will be supported by solid fill.
_____ square feet of solid fill

☒ Other: (30) 12" diameter timber fender piles will be installed around perimeter of pier head, and (1) 10.75" diameter steel pile will support the outer side of the gangway lifting gantry

DIMENSIONS:

Length of fixed section: Refer to plans.
Width of fixed section: Pier head 23'-4" x 80'-0"
Length of ramp: Pier approach 123'+/- x 14'-0" to 23'-4"
Dimensions of float: 80 feet
Refer to plans. (1) 12'x30', (1) 8'x24', (1) 8'x26'-10", (1) 6'x20'
Distance the structure will extend below mean low water (MLW): +/-115 feet
Depth of water at the fixed end of the structure: +/-5 to 6 feet
Depth of water at the float at low tide: +/-3.5 to 5 feet
Depth of water at the float at high tide: +/-13.2 to 14.7 feet
Dimensions of any proposed buildings (e.g. bait shed):
<12 feet high by 8 feet wide by 12 feet long storage shed
<20 feet high by 16 feet wide by 30 feet long outdoor covered classroom

ACCESS:

During construction, my project site will be accessed via:

☒ Land

☐ Beach/intertidal area

☒ Water/barge

ATTACHMENT 14 – Species List, MA Consistency Letter, and Correspondence with USFW regarding the Northern Long-eared Bat.

United States Department of the Interior

FISH AND WILDLIFE SERVICE
Maine Ecological Services Field Office
P. O. Box A
East Orland, ME 04431
Phone: (207) 469-7300 Fax: (207) 902-1588

In Reply Refer To: 04/03/2024 12:50:39 UTC
Project Code: 2023-0081325
Project Name: University of New England Pier Revised

Subject: List of threatened and endangered species that may occur in your proposed project location or may be affected by your proposed project

To Whom It May Concern:

The enclosed species list identifies threatened, endangered, proposed, and candidate species, as well as proposed and final designated critical habitat, that may occur within the boundary of your proposed project and/or may be affected by your proposed project. The species list fulfills the requirements of the U.S. Fish and Wildlife Service (Service) under section 7(c) of the Endangered Species Act (Act) of 1973, as amended (16 U.S.C. 1531 *et seq.*).

New information based on updated surveys, changes in the abundance and distribution of species, changed habitat conditions, or other factors could change this list. Please feel free to contact us if you need more current information or assistance regarding the potential impacts to federally proposed, listed, and candidate species and federally designated and proposed critical habitat. Please note that under 50 CFR 402.12(e) of the regulations implementing section 7 of the Act, the accuracy of this species list should be verified after 90 days. This verification can be completed formally or informally as desired. The Service recommends that verification be completed by visiting the IPaC website at regular intervals during project planning and implementation for updates to species lists and information. An updated list may be requested through IPaC by completing the same process used to receive the enclosed list.

The purpose of the Act is to provide a means whereby threatened and endangered species and the ecosystems upon which they depend may be conserved. Under sections 7(a)(1) and 7(a)(2) of the Act and its implementing regulations (50 CFR 402 *et seq.*), Federal agencies are required to utilize their authorities to carry out programs for the conservation of threatened and endangered species and to determine whether projects may affect threatened and endangered species and/or designated critical habitat.

A Biological Assessment is required for construction projects (or other undertakings having similar physical impacts) that are major Federal actions significantly affecting the quality of the human environment as defined in the National Environmental Policy Act (42 U.S.C. 4332(2)(c)). For projects other than major construction activities, the Service suggests that a biological

evaluation similar to a Biological Assessment be prepared to determine whether the project may affect listed or proposed species and/or designated or proposed critical habitat. Recommended contents of a Biological Assessment are described at 50 CFR 402.12.

If a Federal agency determines, based on the Biological Assessment or biological evaluation, that listed species and/or designated critical habitat may be affected by the proposed project, the agency is required to consult with the Service pursuant to 50 CFR 402. In addition, the Service recommends that candidate species, proposed species and proposed critical habitat be addressed within the consultation. More information on the regulations and procedures for section 7 consultation, including the role of permit or license applicants, can be found in the "Endangered Species Consultation Handbook" at: https://www.fws.gov/sites/default/files/documents/endangered-species-consultation-handbook.pdf

Migratory Birds: In addition to responsibilities to protect threatened and endangered species under the Endangered Species Act (ESA), there are additional responsibilities under the Migratory Bird Treaty Act (MBTA) and the Bald and Golden Eagle Protection Act (BGEPA) to protect native birds from project-related impacts. Any activity, intentional or unintentional, resulting in take of migratory birds, including eagles, is prohibited unless otherwise permitted by the U.S. Fish and Wildlife Service (50 C.F.R. Sec. 10.12 and 16 U.S.C. Sec. 668(a)). For more information regarding these Acts, see Migratory Bird Permit | What We Do | U.S. Fish & Wildlife Service (fws.gov).

The MBTA has no provision for allowing take of migratory birds that may be unintentionally killed or injured by otherwise lawful activities. It is the responsibility of the project proponent to comply with these Acts by identifying potential impacts to migratory birds and eagles within applicable NEPA documents (when there is a federal nexus) or a Bird/Eagle Conservation Plan (when there is no federal nexus). Proponents should implement conservation measures to avoid or minimize the production of project-related stressors or minimize the exposure of birds and their resources to the project-related stressors. For more information on avian stressors and recommended conservation measures, see https://www.fws.gov/library/collections/threats-birds.

In addition to MBTA and BGEPA, Executive Order 13186: *Responsibilities of Federal Agencies to Protect Migratory Birds*, obligates all Federal agencies that engage in or authorize activities that might affect migratory birds, to minimize those effects and encourage conservation measures that will improve bird populations. Executive Order 13186 provides for the protection of both migratory birds and migratory bird habitat. For information regarding the implementation of Executive Order 13186, please visit https://www.fws.gov/partner/council-conservation-migratory-birds.

We appreciate your concern for threatened and endangered species. The Service encourages Federal agencies to include conservation of threatened and endangered species into their project planning to further the purposes of the Act. Please include the Consultation Code in the header of this letter with any request for consultation or correspondence about your project that you submit to our office.

Attachment(s):

- Official Species List

OFFICIAL SPECIES LIST

This list is provided pursuant to Section 7 of the Endangered Species Act, and fulfills the requirement for Federal agencies to "request of the Secretary of the Interior information whether any species which is listed or proposed to be listed may be present in the area of a proposed action".

This species list is provided by:

Maine Ecological Services Field Office
P. O. Box A
East Orland, ME 04431
(207) 469-7300

PROJECT SUMMARY

Project Code: 2023-0081325
Project Name: University of New England Pier Revised
Project Type: Boatlift/Boathouse/Dock/Pier/Piles - New Construction
Project Description: The project involves construction of a permanent pier on the Saco River and an access road to support the University of New England Marine Sciences program. The project will involve clearing approximately 0.3 acres of mixed forested upland and disturbance of 85 square feet intertidal and deep water habitat for pier piles.

Project Location:

The approximate location of the project can be viewed in Google Maps: https://www.google.com/maps/@43.4599768,-70.38240099961078,14z



Counties: York County, Maine

ENDANGERED SPECIES ACT SPECIES

There is a total of 6 threatened, endangered, or candidate species on this species list.

Species on this list should be considered in an effects analysis for your project and could include species that exist in another geographic area. For example, certain fish may appear on the species list because a project could affect downstream species.

IPaC does not display listed species or critical habitats under the sole jurisdiction of NOAA Fisheries[1], as USFWS does not have the authority to speak on behalf of NOAA and the Department of Commerce.

See the "Critical habitats" section below for those critical habitats that lie wholly or partially within your project area under this office's jurisdiction. Please contact the designated FWS office if you have questions.

---

1. NOAA Fisheries, also known as the National Marine Fisheries Service (NMFS), is an office of the National Oceanic and Atmospheric Administration within the Department of Commerce.

MAMMALS

NAME	STATUS
Northern Long-eared Bat *Myotis septentrionalis* No critical habitat has been designated for this species. Species profile: https://ecos.fws.gov/ecp/species/9045	Endangered
Tricolored Bat *Perimyotis subflavus* No critical habitat has been designated for this species. Species profile: https://ecos.fws.gov/ecp/species/10515	Proposed Endangered

BIRDS

NAME	STATUS
Piping Plover *Charadrius melodus* Population: [Atlantic Coast and Northern Great Plains populations] - Wherever found, except those areas where listed as endangered. There is **final** critical habitat for this species. Your location does not overlap the critical habitat. Species profile: https://ecos.fws.gov/ecp/species/6039	Threatened
Roseate Tern *Sterna dougallii dougallii* Population: Northeast U.S. nesting population No critical habitat has been designated for this species. Species profile: https://ecos.fws.gov/ecp/species/2083	Endangered
Rufa Red Knot *Calidris canutus rufa* There is **proposed** critical habitat for this species. Species profile: https://ecos.fws.gov/ecp/species/1864	Threatened

INSECTS

NAME	STATUS
Monarch Butterfly *Danaus plexippus* No critical habitat has been designated for this species. Species profile: https://ecos.fws.gov/ecp/species/9743	Candidate

CRITICAL HABITATS

THERE ARE NO CRITICAL HABITATS WITHIN YOUR PROJECT AREA UNDER THIS OFFICE'S JURISDICTION.

YOU ARE STILL REQUIRED TO DETERMINE IF YOUR PROJECT(S) MAY HAVE EFFECTS ON ALL ABOVE LISTED SPECIES.

IPAC USER CONTACT INFORMATION

Agency: Department of Commerce
Name: Ian Broadwater
Address: 18 Grand Street
City: South Portland
State: ME
Zip: 04106
Email ian@broadwaterenvironmental.com
Phone: 2075239029

LEAD AGENCY CONTACT INFORMATION

Lead Agency: Department of Commerce

United States Department of the Interior

FISH AND WILDLIFE SERVICE
Maine Ecological Services Field Office
P. O. Box A
East Orland, ME 04431
Phone: (207) 469-7300 Fax: (207) 902-1588

In Reply Refer To: May 12, 2023
Project code: 2023-0081325
Project Name: University of New England Pier Revised

Federal Nexus: yes
Federal Action Agency (if applicable): Department of Commerce

Subject: Technical assistance for 'University of New England Pier Revised'

Dear Ian Broadwater:

This letter records your determination using the Information for Planning and Consultation (IPaC) system provided to the U.S. Fish and Wildlife Service (Service) on May 12, 2023, for “University of New England Pier Revised” (here forward, Project). This project has been assigned Project Code 2023-0081325 and all future correspondence should clearly reference this number.

The Service developed the IPaC system and associated species’ determination keys in accordance with the Endangered Species Act of 1973 (ESA; 87 Stat. 884, as amended; 16 U.S.C. 1531 et seq.) and based on a standing analysis. All information submitted by the Project proponent into the IPaC must accurately represent the full scope and details of the Project. Failure to accurately represent or implement the Project as detailed in IPaC or the Northeast Determination Key (Dkey), invalidates this letter. To make a no effect determination, the full scope of the proposed project implementation (action) should not have any effects (either positive or negative effect(s)), to a federally listed species or designated critical habitat.

Effects of the action are all consequences to listed species or critical habitat that are caused by the proposed action, including the consequences of other activities that are caused by the proposed action. A consequence is caused by the proposed action if it would not occur but for the proposed action and it is reasonably certain to occur. Effects of the action may occur later in time and may include consequences occurring outside the immediate area involved in the action. (See § 402.17). Under Section 7 of the ESA, if a federal action agency makes a no effect determination, no further consultation with, or concurrence from, the Service is required (ESA §7). If a proposed Federal action may affect a listed species or designated critical habitat, formal consultation is required (except when the Service concurs, in writing, that a proposed action "is

not likely to adversely affect (NLAA)" listed species or designated critical habitat [50 CFR §402.02, 50 CFR§402.13]).

The IPaC results indicated the following species is (are) potentially present in your project area and, based on your responses to the Service's Northeast DKey, you determined the proposed Project will have the following effect determinations:

Species	Listing Status	Determination
Piping Plover (*Charadrius melodus*)	Threatened	No effect
Red Knot (*Calidris canutus rufa*)	Threatened	No effect
Roseate Tern (*Sterna dougallii dougallii*)	Endangered	May affect

Consultation with the Service is not complete. Further consultation or coordination with the Service is necessary for those species or designated critical habitats with a determination of "May Affect". Please contact our Maine Ecological Services Field Office to discuss methods to avoid or minimize potential adverse effects to those species or designated critical habitats.

In addition to the species listed above, the following species and/or critical habitats may also occur in your project area and are not covered by this conclusion:

- Monarch Butterfly *Danaus plexippus* Candidate
- Northern Long-eared Bat *Myotis septentrionalis* Endangered

Please Note: If the Action may impact bald or golden eagles, additional coordination with the Service under the Bald and Golden Eagle Protection Act (BGEPA) (54 Stat. 250, as amended, 16 U.S.C. 668a-d) by the prospective permittee may be required. Please contact the Migratory Birds Permit Office, (413) 253-8643, or PermitsR5MB@fws.gov, with any questions regarding potential impacts to Eagles.

If you have any questions regarding this letter or need further assistance, please contact the Maine Ecological Services Field Office and reference the Project Code associated with this Project.

Action Description
You provided to IPaC the following name and description for the subject Action.

1. Name

University of New England Pier Revised

2. Description

The following description was provided for the project 'University of New England Pier Revised':

> The project involves construction of a permanent pier on the Saco River and an access road to support the University of New England Marine Sciences program. The project will involve clearing approximately 0.3 acres of mixed forested upland and disturbance of 85 square feet intertidal and deep water habitat for pier piles.

The approximate location of the project can be viewed in Google Maps: https://www.google.com/maps/@43.4599768,-70.38240099961078,14z



QUALIFICATION INTERVIEW

1. As a representative of this project, do you agree that all items submitted represent the complete scope of the project details and you will answer questions truthfully?

   Yes

2. Does the proposed project include, or is it reasonably certain to cause, intentional take of listed species?

   Note: This question could refer to research, direct species management, surveys, and/or studies that include intentional handling/encountering, harassment, collection, or capturing of any individual of a federally listed threatened, endangered, or proposed species.

   No

3. Is the action authorized, permitted, licensed, funded, or being carried out by a Federal agency in whole or in part?

   Yes

4. Is the Federal Highway Administration (FHWA), Federal Railroad Administration (FRA), or Federal Transit Administration (FTA) the lead agency for this project?

   No

5. Are you including in this analysis all impacts to federally listed species that may result from the entirety of the project (not just the activities under federal jurisdiction)?

   Note: If there are project activities that will impact listed species that are considered to be outside of the jurisdiction of the federal action agency submitting this key, contact your local Ecological Services Field Office to determine whether it is appropriate to use this key. If your Ecological Services Field Office agrees that impacts to listed species that are outside the federal action agency's jurisdiction will be addressed through a separate process, you can answer yes to this question and continue through the key.

   Yes

6. Are you the lead federal action agency or designated non-federal representative requesting concurrence on behalf of the lead Federal Action Agency?

   Yes

7. Is the lead federal action agency the Environmental Protection Agency (EPA) or Federal Communications Commission (FCC)?

   No

8. Will the proposed project involve the use of herbicide where listed species are present?

   No

9. Are there any caves or anthropogenic features suitable for hibernating or roosting bats within the area expected to be impacted by the project?

   No

10. Does any component of the project associated with this action include structures that may pose a collision risk to **birds** (e.g., land-based or offshore wind turbines, communication towers, high voltage transmission lines, any type of towers with or without guy wires)?

    Note: For federal actions, answer ‘yes’ if the construction or operation of wind power facilities is either (1) part of the federal action or (2) would not occur but for a federal agency action (federal permit, funding, etc.).

    No

11. Does any component of the project associated with this action include structures that may pose a collision risk to **bats** (e.g., land-based wind turbines)?

    Note: For federal actions, answer ‘yes’ if the construction or operation of wind power facilities is either (1) part of the federal action or (2) would not occur but for a federal agency action (federal permit, funding, etc.).

    No

12. Will the proposed project result in permanent changes to water quantity in a stream or temporary changes that would be sufficient to result in impacts to listed species?

    For example, will the proposed project include any activities that would alter stream flow, such as water withdrawal, hydropower energy production, impoundments, intake structures, diversion structures, and/or turbines? Projects that include temporary and limited water reductions that will not displace listed species or appreciably change water availability for listed species (e.g. listed species will experience no changes to feeding, breeding or sheltering) can answer "No". Note: This question refers only to the amount of water present in a stream, other water quality factors, including sedimentation and turbidity, will be addressed in following questions.

    No

13. Will the proposed project affect wetlands where listed species are present?

    This includes, for example, project activities within wetlands, project activities within 300 feet of wetlands that may have impacts on wetlands, water withdrawals and/or discharge of contaminants (even with a NPDES).

    Yes

14. Will the proposed project activities (including upland project activities) occur within 0.5 miles of the water's edge of a stream or tributary of a stream where listed species may be present?

    Yes

15. Will the proposed project directly affect a streambed (below ordinary high water mark (OHWM)) of the stream or tributary where listed species may be present?

    Yes

16. Will the proposed project bore underneath (directional bore or horizontal directional drill) a stream where listed species may be present?

    No

17. Will the proposed project involve a new point source discharge into a stream or change an existing point source discharge (e.g., outfalls; leachate ponds) where listed species may be present?

    No

18. Will the proposed project involve the removal of excess sediment or debris, dredging or in-stream gravel mining where listed species may be present?

    No

19. Will the proposed project involve the creation of a new water-borne contaminant source where listed species may be present?

    Note New water-borne contaminant sources occur through improper storage, usage, or creation of chemicals. For example: leachate ponds and pits containing chemicals that are not NSF/ANSI 60 compliant have contaminated waterways. Sedimentation will be addressed in a separate question.

    No

20. Will the proposed project involve perennial stream loss, in a stream of tributary of a stream where listed species may be present, that would require an individual permit under 404 of the Clean Water Act?

    No

21. Will the proposed project involve blasting where listed species may be present?

    No

22. Will the proposed project include activities that could result in an increase to recreational fishing or potentially affect fish movement temporarily or permanently (including fish stocking, harvesting, or creation of barriers to fish passage)?

    No

23. Will the proposed project involve earth moving that could cause erosion and sedimentation, and/or contamination along a stream or tributary of a stream where listed species may be present?

    NoteAnswer "Yes" to this question if erosion and sediment control measures will be used to protect the stream.

    Yes

24. Will the proposed project involve vegetation removal within 200 feet of a perennial stream bank where listed species may be present?

    Yes

25. Will erosion and sedimentation control Best Management Practices (BMPs) associated with applicable state and/or Federal permits, be applied to the project? If BMPs have been provided by and/or coordinated with and approved by the appropriate Ecological Services Field Office, answer "Yes" to this question.

    Yes

26. Will the proposed project result in changes to beach dynamics that may modify formation of habitat over time?

    Note: Examples of projects that result in changes to beach dynamics include 1) construction of offshore breakwaters and groins; 2) mining of sand from an updrift ebb tidal delta; 3) removing or adding beach sands; and 4) projects that stabilize dunes (including placement of sand fences or planting vegetation).

    No

27. [Hidden Semantic] Is the project area located within the piping plover AOI?

    Automatically answered
    Yes

28. If you have determined that the piping plover is unlikely to occur within your project's action area or that your project is unlikely to have any potential effects on the piping plover, you may wish to make a "no effect" determination for the piping plover. Additional guidance on how to make this decision can be found in the project review section of your local Ecological Services Field Office's website. CBFO: https://www.fws.gov/office/chesapeake-bay-ecological-services/project-review ; MEFO: https://www.fws.gov/office/maine-ecological-services ; NJFO: https://www.fws.gov/office/new-jersey-ecological-services/new-jersey-field-office-project-review-guide ; NEFO: https://www.fws.gov/office/new-england-ecological-services/endangered-species-project-review#Step5 ; WVFO: https://www.fws.gov/office/west-virginia-ecological-services/project-planning. If you are unsure, answer "No" and continue through the key.

    Would you like to make a no effect determination for the piping plover?

    Yes

29. [Hidden Semantic] Is the project area located within the piping plover AOI?

    Automatically answered
    Yes

30. [Hidden Semantic] Is the project area located within the red knot AOI?

    Automatically answered
    Yes

31. If you have determined that the red knot is unlikely to occur within your project’s action area or that your project is unlikely to have any potential effects on the red knot, you may wish to make a “no effect” determination for the red knot. Additional guidance on how to make this decision can be found in the project review section of your local Ecological Services Field Office's website. CBFO: https://www.fws.gov/office/chesapeake-bay-ecological-services/project-review ; MEFO: https://www.fws.gov/office/maine-ecological-services ; NJFO: https://www.fws.gov/office/new-jersey-ecological-services/new-jersey-field-office-project-review-guide ; NEFO: https://www.fws.gov/office/new-england-ecological-services/endangered-species-project-review#Step5 ; WVFO: https://www.fws.gov/office/west-virginia-ecological-services/project-planning. If you are unsure, answer "No" and continue through the key.

    Would you like to make a no effect determination for the red knot?

    Yes

32. [Hidden Semantic] Is the project area located within the roseate tern AOI?

    Automatically answered
    Yes

33. If you have determined that the roseate tern is unlikely to occur within your project’s action area or that your project is unlikely to have any potential effects on the roseate tern, you may wish to make a “no effect” determination for the roseate tern. Additional guidance on how to make this decision can be found in the project review section of your local Ecological Services Field Office's website. CBFO: https://www.fws.gov/office/chesapeake-bay-ecological-services/project-review ; MEFO: https://www.fws.gov/office/maine-ecological-services ; NJFO: https://www.fws.gov/office/new-jersey-ecological-services/new-jersey-field-office-project-review-guide ; NEFO: https://www.fws.gov/office/new-england-ecological-services/endangered-species-project-review#Step5 ; WVFO: https://www.fws.gov/office/west-virginia-ecological-services/project-planning. If you are unsure, answer "No" and continue through the key.

    Would you like to make a no effect determination for the roseate tern?

    No

34. [Semantic] Does the project intersect the Virginia big-eared bat critical habitat?

    Automatically answered
    No

35. [Semantic] Does the project intersect the Indiana bat critical habitat?

    Automatically answered
    No

36. [Semantic] Does the project intersect the candy darter critical habitat?

    Automatically answered
    No

37. [Semantic] Does the project intersect the diamond darter critical habitat?

    Automatically answered
    No

38. [Semantic] Does the project intersect the Big Sandy crayfish critical habitat?

    Automatically answered
    No

39. [Hidden Semantic] Does the project intersect the Guyandotte River crayfish critical habitat?

    Automatically answered
    No

40. Do you have any other documents that you want to include with this submission?

    Yes

    SUBMITTED DOCUMENTS

    - *UNE MSC APPENDIX B.pdf* https://ipac.ecosphere.fws.gov/project/5OEXZ4IMIRGHTN6NWQ6DFNIBIY/projectDocuments/126368373
    - *Photos of bank and shore at pier.pdf* https://ipac.ecosphere.fws.gov/project/5OEXZ4IMIRGHTN6NWQ6DFNIBIY/projectDocuments/126368441

PROJECT QUESTIONNAIRE

1. Approximately how many acres of trees would the proposed project remove?

   0.3

2. Approximately how many total acres of disturbance are within the disturbance/ construction limits of the proposed project?

   0.3

3. Briefly describe the habitat within the construction/disturbance limits of the project site.

   The access road area is forested upland with sparse ground cover and trres generally between 3 inches and 10 inches in diameter. The upland comes to a rock face with a drop of approximately 6 to 8 feet high to a cobble beach below that is within the intertidal zone. The cobbles are covered with rock weed growing between the cobbles. Photos of the upland and cobble intertidal zone have been uploaded.

IPAC USER CONTACT INFORMATION

Agency: Department of Commerce
Name: Ian Broadwater
Address: 18 Grand Street
City: South Portland
State: ME
Zip: 04106
Email ian@broadwaterenvironmental.com
Phone: 2076538737

LEAD AGENCY CONTACT INFORMATION

Lead Agency: Department of Commerce

Tom Saucier

From: Ian <ian@broadwaterenvironmental.com>
Sent: Friday, May 19, 2023 9:58 AM
To: Tom Saucier
Subject: FW: [EXTERNAL] UNE Pier Project

From: Mahaney, Wende <wende_mahaney@fws.gov>
Sent: Friday, May 19, 2023 8:34 AM
To: Ian <ian@broadwaterenvironmental.com>
Cc: Glon, Mael G <mael_glon@fws.gov>
Subject: Re: [EXTERNAL] UNE Pier Project

Hi Ian,

So I looked at the letter you generated from using the NLEB determination key. You reached a "not likely to adversely affect" determination, which would then have to be "submitted" to USFWS by the Corps project manager through IPaC once you submit the permit application and supporting materials.

But, you really could have made a "no effect" determination at Question 2 in the dkey since NLEB really are not expected to occur at the project site. I suspect the Corps PM may change the answers in the dkey and go that route. That's their decision to make. You can leave things as is in IPaC and let the Corps make the final decision on no effect or not likely to adversely affect. Either way, section 7 consultation for the NLEB can be completed quickly by the Corps through use of IPaC.

Thanks for your coordination.

Wende

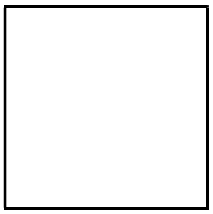

Wende S. Mahaney, C.W.B. (she/her/hers)
U.S. Fish and Wildlife Service
Maine Field Office
P.O. Box A (mailing address)
306 Hatchery Road (physical address)
East Orland, Maine 04431

Telephone: (207) 902-1569 (direct line)
Fax: (207) 902-1588
Cellular Phone: 207-944-2991

From: Ian <ian@broadwaterenvironmental.com>
Sent: Thursday, May 18, 2023 11:20 AM
To: Mahaney, Wende <wende_mahaney@fws.gov>
Subject: [EXTERNAL] UNE Pier Project

This email has been received from outside of DOI - Use caution before clicking on links, opening attachments, or responding.

Hi Wende,

I have revised the iPAC for this project. I added "revised" onto the title and will archive the old version. I needed to revise some answers that I couldn't edit in the old version. I also added additional information that I gathered from the engineer and by visiting the site in person. In the revised iPAC we have the Rosate tern and NLEB showing up as "may effect".

When I visited the site, I took pictures from the approximate center of the pier looking down at the shore. They are attached. The shore is all intertidal where the pier is going . The intertidal zone meets a vertical rock face of 6 to 8 feet high. At this location, the intertidal zone has cobbles covering 80% of the area and rock weed covering much of the cobbles (and non-cobble areas). Due to this condition, we felt that the Piping plover and the Red knot would not frequent nor nest in this type of setting. We did feel like there was a potential for the Rosate tern to potentially nest in the rock face. The rock face does face north and does not receive much in the way of sun. The upland at the top of the rock face is forested with a sparse herbaceous cover.

We were wondering if you can take a look at the revised iPAC and give us advice on how to proceed. I have added you to the project. Evidently, the permit application is going in next week.

Thanks in advance,

Ian

Ian Broadwater MECSS, MELSE, NHCWS
Broadwater Environmental, LLC
1-207-653-8737
www.broadwaterenvironmental.com



Photo 1-Upalnd at center of proposed pier

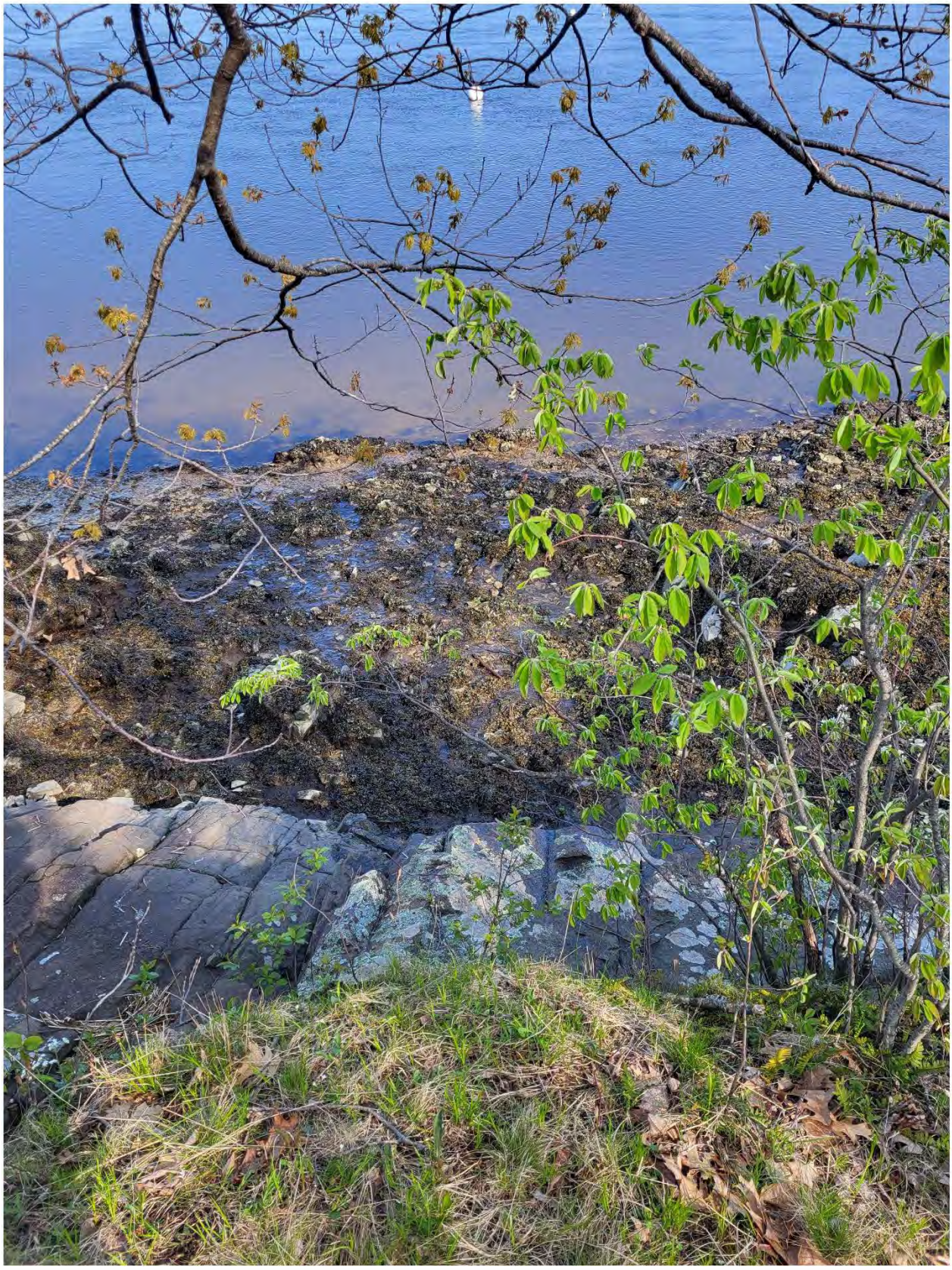

Photo 2-Rocky shore at center of proposed pier



Photo3-Looking east at point from center of pier



Photo 4-Looking west from center of proposed pier

ATTACHMENT 15 – ABUTTER NOTIFICATIONS

7022 1670 0001 0356 1867

U.S. Postal Service™
CERTIFIED MAIL® RECEIPT
Domestic Mail Only

For delivery information, visit our website at *www.usps.com®*.

Biddeford, ME 04005

OFFICIAL USE

Certified Mail Fee	$4.40
$	$3.65
Extra Services & Fees (check box, add fee as appropriate)	
☐ Return Receipt (hardcopy)	$0.00
☐ Return Receipt (electronic)	$0.00
☐ Certified Mail Restricted Delivery	$0.00
☐ Adult Signature Required	$0.00
☐ Adult Signature Restricted Delivery	$
Postage	$0.68
$	
Total Postage	$8.73
$	
Sent To	John and Elizabeth Mansfield
Street and	51 Hlls Beach Road
City, State	Biddeford, ME 04005

0086 4

TOPSHAM, MAINE 04086 JUN 14 2024 Postmark Here USPS 06/14/2024

PS Form 3800, April 2015 PSN 7530-02-000-9047 See Reverse for Instructions

7022 1670 0001 0356 1812

U.S. Postal Service™
CERTIFIED MAIL® RECEIPT
Domestic Mail Only

For delivery information, visit our website at *www.usps.com®*.

Biddeford, ME 04005

OFFICIAL USE

Certified Mail Fee	$4.40
$	$3.65
Extra Services & Fees (check box, add fee as appropriate)	
☐ Return Receipt (hardcopy)	$0.00
☐ Return Receipt (electronic)	$0.00
☐ Certified Mail Restricted Delivery	$0.00
☐ Adult Signature Required	$0.00
☐ Adult Signature Restricted Delivery	$
Postage	$0.68
$	
Total Postage	$8.73
$	
Sent To	Wermenchuk Realty Trust
Street and	Bernice G. Wermenchuk, Trustee
City, State,	2 Old Pool Road
	Biddeford, ME 04005

0086 4

TOPSHAM, MAINE 04086 JUN 14 2024 Postmark Here USPS 06/14/2024

PS Form 3800, April 2015 PSN 7530-02-000-9047 See Reverse for Instruction

7022 1670 0001 0356 1829

U.S. Postal Service™
CERTIFIED MAIL® RECEIPT
Domestic Mail Only

For delivery information, visit our website at *www.usps.com®*.

Saco, ME 04072

OFFICIAL USE

Certified Mail Fee	$4.40
$	$3.65
Extra Services & Fees (check box, add fee as appropriate)	
☐ Return Receipt (hardcopy)	$0.00
☐ Return Receipt (electronic)	$0.00
☐ Certified Mail Restricted Delivery	$0.00
☐ Adult Signature Required	$0.00
☐ Adult Signature Restricted Delivery	$
Postage	$0.68
$	
Total Po	$8.73
$	
Sent To	5 Red Oak Lane, LLC
Street a	62 Pleasant Street
City, Sta	Saco, ME 04072

0086 4

TOPSHAM, MAINE 04086 JUN 14 2024 Postmark Here 06/14/2024 USPS

PS Form 3800, April 2015 PSN 7530-02-000-9047 See Reverse for Instructions

7022 1670 0001 0356 1843

U.S. Postal Service™
CERTIFIED MAIL® RECEIPT
Domestic Mail Only

For delivery information, visit our website at *www.usps.com®*.

Biddeford, ME 04005

OFFICIAL USE

Certified Mail Fee	$4.40
$	$3.65
Extra Services & Fees (check box, add fee as appropriate)	
☐ Return Receipt (hardcopy)	$0.00
☐ Return Receipt (electronic)	$0.00
☐ Certified Mail Restricted Delivery	$0.00
☐ Adult Signature Required	$0.00
☐ Adult Signature Restricted Delivery	$
Postage	$0.68
$	
Total Pos	$8.73
$	
Sent To	John Paul and Agnes Boucher
Street an	26 Reserved Lane
City, Stat	Biddeford, ME 04005

0086 4

TOPSHAM, MAINE 04086 JUN 14 2024 Postmark Here 06/14/2024 USPS

PS Form 3800, April 2015 PSN 7530-02-000-9047 See Reverse for Instruction

7022 1670 0001 0356 1850

U.S. Postal Service™
CERTIFIED MAIL® RECEIPT
Domestic Mail Only

For delivery information, visit our website at *www.usps.com®*.

Biddeford, ME 04005

OFFICIAL USE

Certified Mail Fee	$4.40
$	$3.65
Extra Services & Fees (check box, add fee as appropriate)	
☐ Return Receipt (hardcopy)	$0.00
☐ Return Receipt (electronic)	$0.00
☐ Certified Mail Restricted Delivery	$0.00
☐ Adult Signature Required	$0.00
☐ Adult Signature Restricted Delivery	$
Postage	$0.68
$	
Total P	$8.73
$	
Sent To	Julie J. Vogel
Street	11 Seabreeze Ave
City, S	Biddeford, ME 04005

0086 4

TOPSHAM, MAINE 04086 JUN 14 2024 Postmark Here 06/14/2024 USPS

PS Form 3800, April 2015 PSN 7530-02-000-9047 See Reverse for Instructions

7022 1670 0001 0356 1836

U.S. Postal Service™
CERTIFIED MAIL® RECEIPT
Domestic Mail Only

For delivery information, visit our website at *www.usps.com®*.

Biddeford, ME 04005

OFFICIAL USE

Certified Mail Fee	$4.40
$	$3.65
Extra Services & Fees (check box, add fee as appropriate)	
☐ Return Receipt (hardcopy)	$0.00
☐ Return Receipt (electronic)	$0.00
☐ Certified Mail Restricted Delivery	$0.00
☐ Adult Signature Required	$0.00
☐ Adult Signature Restricted Delivery	$
Postage	$0.68
$	
Total F	$8.73
$	
Sent To	Kelly E. Grasso
Street	9 Red Oak Lane
City, S	Biddeford, ME 04005

0086 4

TOPSHAM, MAINE 04086 JUN 14 2024 Postmark Here 06/14/2024 USPS

PS Form 3800, April 2015 PSN 7530-02-000-9047 See Reverse for Instruction

UNIVERSITY OF NEW ENGLAND
MARINE SCIENCE CENTER PIER

BIDDEFORD, MAINE

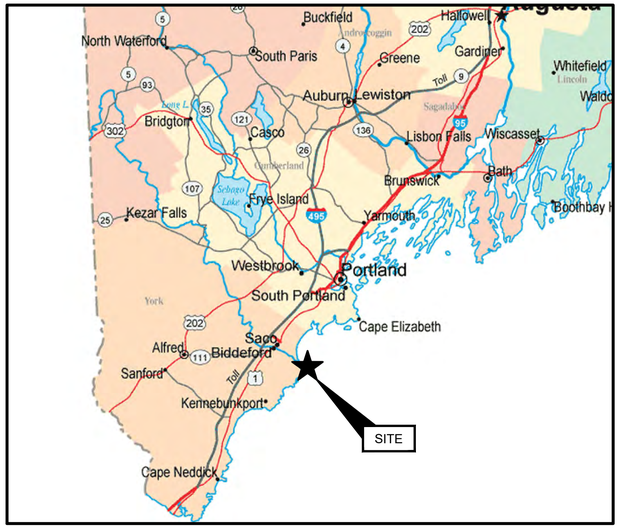

SOURCE:
MAINE ROAD MAP, GOOGLE IMAGES, ACCESSED SEPTEMBER 2023.

STATE MAP
(NOT TO SCALE)

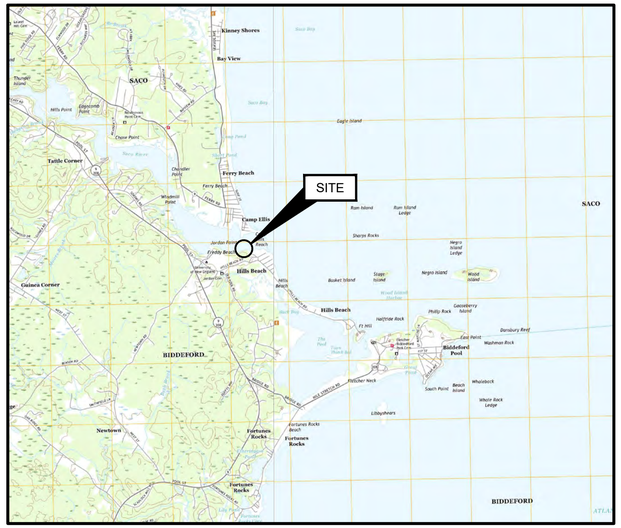

SOURCE:
USGS TOPOGRAPHICAL MAP OF BIDDEFORD, MAINE 2022

SITE LOCATION MAP
(NOT TO SCALE)

SHEET INDEX

SHEET NO.	DRAWING NO.	TITLE
1	G-001	COVER SHEET
2	G-002	GENERAL NOTES
3	G-003	VICINITY PLAN
4	B-001	BORING LOCATION PLAN
5	B-002	BORING LOGS (1 OF 3)
6	B-003	BORING LOGS (2 OF 3)
7	B-004	BORING LOGS (3 OF 3)
8	B-005	INTERPRETIVE SUBSURFACE PROFILE
9	C-001	EXISTING CONDITIONS PLAN
10	C-002	DEMOLITION AND CONSTRUCTION STAGING
11	C-003	SITE PLAN
12	C-004	GRADING AND DRAINAGE PLAN
13	C-005	EROSION CONTROL PLAN
14	C-006	ACCESS ROAD PLAN AND PROFILE STA 1+00 TO MATCHLINE STA 4+00
15	C-007	ACCESS ROAD PLAN AND PROFILE MATCHLINE STA 4+00 TO STA 6+60
16	C-008	ACCESS ROAD TYPICAL SECTION
17	C-009	ACCESS ROAD SECTIONS 2+00 TO 3+75
18	C-010	ACCESS ROAD SECTIONS 4+00 TO 5+75
19	C-011	SITE DETAILS I
20	C-012	EROSION CONTROL NOTES
21	C-013	EROSION CONTROL DETAILS I
22	C-014	EROSION CONTROL DETAILS II
23	S-001	PIER LAYOUT PLAN
24	S-002	PIER PLANS AND ELEVATIONS
25	S-003	TYPICAL PIER SECTIONS (1 OF 2)
26	S-004	TYPICAL PIER SECTIONS (2 OF 2)
27	S-005	PILE PLAN
28	S-006	PRECAST PILE CAP PLAN (1 OF 2)
29	S-007	PRECAST PILE CAP PLAN (1 OF 2)
30	S-008	PRECAST DECK PLANK PLAN
31	S-009	MISCELLANEOUS DETAILS (1 OF 5)
32	S-010	MISCELLANEOUS DETAILS (2 OF 5)
33	S-011	MISCELLANEOUS DETAILS (3 OF 5)
34	S-012	MISCELLANEOUS DETAILS (4 OF 5)
35	S-013	MISCELLANEOUS DETAILS (5 OF 5)
36	S-014	ABUTMENT DETAILS
37	F-001	FLOAT PLAN AND DETAILS

PREPARED FOR:

UNIVERSITY OF NEW ENGLAND
11 HILLS BEACH ROAD
BIDDEFORD, MAINE
(207)283-0171

PREPARED BY:

GEI CONSULTANTS, INC.
5 MILK STREET
PORTLAND, ME 04101
(207)797-8901

811 DigSafe

THIS DOCUMENT, AND THE IDEAS AND DESIGNS INCORPORATED HEREIN, IS AN INSTRUMENT OF PROFESSIONAL SERVICE, IS THE PROPERTY OF GEI CONSULTANTS AND IS NOT TO BE USED, IN WHOLE OR IN PART, FOR ANY OTHER PROJECT WITHOUT THE WRITTEN AUTHORIZATION OF GEI CONSULTANTS.

GEI PROJECT NO. 2203703

PRELIMINARY - NOT FOR CONSTRUCTION - FOR PERMIT

NO.	DATE	ISSUE/REVISION	APP
4	9/14/2023	DEP PERMIT SET	DJB
3	6/28/2023	75% DESIGN SUBMISSION	DJB
2	2/15/2023	30% DESIGN SUBMISSION	DJB
1	12/9/2022	15% DESIGN SUBMISSION, REV	DJB
0	11/11/2022	15% DESIGN SUBMISSION	DJB

STATE OF MAINE
DANIEL J. BANNON
No. 13033
LICENSED PROFESSIONAL ENGINEER
April 22, 2024

DWG. NO.
G-001

SHEET NO.
1 OF 37

COORDINATION OF WORK:

1. THE CONTRACTOR SHALL SCHEDULE ALL ACTIVITIES SO AS TO LIMIT IMPACT TO MARINE AND LANDSIDE USES.
2. WORK SHALL BE COORDINATED WITH THE OWNER AND THEIR REPRESENTATIVES:

UNE:A:A:A:	ANDREW PHILIPPE	207-602-2365 (OFFICE)	207-400-6166 (CELL)
GEI:A:A:B:	DANIEL BANNON	207-347-2372 (OFFICE)	207-671-2583 (CELL)
SDA:A:A:C:	TOM SAUCIER	207-449-4275	

3. WORK IS SUBJECT TO THE FOLLOWING TIME OF YEAR AND TIMING OF ACTIVITY RESTRICTIONS:
   - TO BE DEFINED UPON PERMIT APPROVAL.
4. CONTRACTOR ACCESS TO THE SITE BY WATER SHALL AT NO TIME IMPACT USE OF THE ADJACENT FEDERAL NAVIGATION CHANNEL.
5. THE OWNER WILL PERMIT THE CONTRACTOR TO HAVE A LAYDOWN AREA ON THE UPLAND PROPERTY FOR USE DURING CONSTRUCTION. AN APPROXIMATE LAYDOWN AREA IS SHOWN ON SHEET C-005. THE FINAL LOCATION AND DIMENSIONS OF THE LAYDOWN AREA SHALL BE APPROVED BY THE OWNER.

SITE ENVIRONMENTAL CONTROLS:

1. ALL WORK SHALL BE PERFORMED IN COMPLIANCE WITH CITY, STATE, AND FEDERAL PERMITS. COPIES OF PERMIT APPROVALS ARE PROVIDED IN THE PROJECT MANUAL.

OSHA REQUIREMENTS:

1. PURSUANT TO 26 M.R.S.A. §565, THE CONTRACTOR SHALL ADHERE TO THE OCCUPATIONAL SAFETY AND HEALTH STANDARDS AS PROMULGATED BY THE FEDERAL OCCUPATIONAL SAFETY AND HEALTH ADMINISTRATION (OSHA) AT 29-CFR PART 1926 AS MOST RECENTLY AMENDED.

EROSION CONTROL:

1. EROSION AND SEDIMENTATION CONTROL MEASURES ARE PROPOSED TO CONTROL ACCELERATED EROSION AND SEDIMENTATION AND REDUCE ADVERSE IMPACTS FROM RUNOFF AND EROSION AT THE WORK SITE.
2. APPLICATION OF TEMPORARY AND PERMANENT EROSION CONTROL MEASURES SHALL BE IN ACCORDANCE WITH THE LATEST EDITION OF THE MAINE EROSION AND SEDIMENT CONTROL BMP'S PUBLISHED BY MAINE DEP AND AVAILABLE AT: HTTPS://WWW.MAINE.GOV/DEP/LAND/EROSION/ESCBMPS/
3. THE WORK SHALL BE PERFORMED BY A CONTRACTOR THAT IS CERTIFIED BY MAINE DEP IN EROSION AND SEDIMENT CONTROL MEASURES. A CERTIFIED INDIVIDUAL SHALL BE ONSITE DURING ALL CONSTRUCTION ACTIVITY.
4. EROSION AND SEDIMENTATION DUE TO RUNOFF, TIDAL EXPOSURE, AND WAVE ACTION SHALL BE CONTROLLED BY STAGING CONSTRUCTION ACTIVITY TO MINIMIZE AREA AND TIME OF DISTURBANCE, APPLICATION OF SILT FENCE, BOOMS, BARRIERS, AND OTHER EROSION CONTROL MEASURES, AND PRESERVING NATURAL VEGETATION WHENEVER POSSIBLE.
5. THE CONTRACTOR'S SEQUENCE OF OPERATIONS AND SCHEDULE FOR WORK ACTIVITIES SHALL ACT TO MINIMIZE EXPOSURE TO EROSION.
6. THE CONTRACTOR SHALL INSTALL AND MAINTAIN A SILTATION BOOM AROUND THE PERIMETER OF THE WORK AREA FOR THE NEW PIER FOR THE DURATION OF WORK.
7. THE CONTRACTOR SHALL TAKE CARE TO LIMIT THE AREA OF SOIL DISTURBANCE TO THE MINIMUM NECESSARY TO COMPLETE THE WORK.
8. EROSION CONTROL MEASURES, SEEDING, AND VEGETATION SHALL BE INSPECTED WEEKLY AND AFTER RAINSTORMS, RUNOFF EVENTS, AND STORM EVENTS UNTIL FINAL ACCEPTANCE. REPAIRS SHALL BE MADE WHEN NO LONGER SERVICEABLE DUE TO DAMAGE OR ACCUMULATION OF SEDIMENT.
9. AT THE COMPLETION OF CONSTRUCTION, ALL DISTURBED AREAS SHALL BE RESTORED TO THEIR ORIGINAL CONDITION AND CONTOUR, UNLESS OTHERWISE INDICATED ON THE PLANS.

SITE PREPARATION:

1. CONTRACTOR SHALL INSTALL ALL SIGNAGE PRIOR TO INITIATION OF CONSTRUCTION ACTIVITIES. INCLUDE OWNER PROJECT SIGNAGE AND FEDERAL AND STATE MANDATED WORK PLACE SIGNAGE.
2. CONTRACTOR SHALL HAVE IN-PLACE TRASH AND SANITARY FACILITIES FOR THE WORK PLACE.
3. DISCOVERY OF INCONSISTENT SITE INFORMATION OR CONDITIONS ARE TO BE IMMEDIATELY CONVEYED TO THE OWNER AND ENGINEER PRIOR TO COMMENCING OR CONTINUING CONSTRUCTION.
4. THE CONTRACTOR SHALL NOTIFY DIG SAFE PRIOR TO COMMENCING ANY WORK.
5. LOCATIONS OF EXISTING UTILITIES SHOWN ARE APPROXIMATE. THE CONTRACTOR SHALL VERIFY LOCATIONS OF UTILITIES AS MAY BE REQUIRED. THE CONTRACTOR SHALL BE FULLY RESPONSIBLE FOR ANY AND ALL DAMAGES OCCURRING AS A RESULT OF THE CONTRACTOR'S FAILURE TO LOCATE AND PROTECT UNDERGROUND UTILITIES. ALL REPAIRS SHALL BE MADE AT THE CONTRACTOR'S EXPENSE.
6. CONTRACTOR SHALL MAINTAIN AND PROTECT ALL EXISTING UTILITIES AND DRAINAGE AT ALL TIMES. THE CONTRACTOR SHALL REPAIR ANY DAMAGE AND RESTORE TO THE PRE-EXISTING CONDITION AT NO COST TO THE OWNER.
7. CONTRACTOR SHALL PROTECT ALL EXISTING STRUCTURES AND SHALL PERFORM THE WORK IN A MANNER THAT AVOIDS DAMAGE TO EXISTING STRUCTURES. STRUCTURES INCLUDE, BUT ARE NOT LIMITED TO, BUILDINGS, PIERS, BULKHEADS, FLOATS, PIER UTILITIES AND FIXTURES, AND RIPRAP SLOPES. CONTRACTOR SHALL REPAIR ANY DAMAGE AT NO ADDITIONAL COST TO THE CITY.
8. CONTRACTOR SHALL SUPPLY ALL NECESSARY TEMPORARY UTILITIES FOR CONSTRUCTION INCLUDING, BUT NOT LIMITED TO; WATER, POWER, LIGHTING, DATA, AND TELEPHONE.
9. CONTRACTOR SHALL READ AND UNDERSTAND ALL REGULATORY CONDITIONS ASSOCIATED WITH THE PROJECT AND SHALL COMPLY WITH ALL ENVIRONMENTAL REQUIREMENTS AND PERMIT CONDITIONS.
10. CONTRACTOR SHALL PROVIDE A CONFINED CONCRETE TRUCK WASHDOWN AREA AT A LOCATION TO BE APPROVED BY THE ENGINEER. WASHDOWN AREA SHALL INCLUDE PROTECTION TO PAVEMENT, A PERIMETER WALL AND A FILTER FABRIC LINER. NO RUNOFF CONTAINING CEMENT OR OTHER SUSPENDED SOLIDS WILL BE PERMITTED. ALL MATERIALS SHALL BE COMPLETELY REMOVED UPON COMPLETION OF CONSTRUCTION AND DISPOSED OF AT AN APPROVED DISPOSAL LOCATION.

CODES:

1. MAINE DOT STANDARD SPECIFICATIONS, MARCH 2020 ED. WITH SUPPLEMENTAL SPECIFICATIONS THROUGH JUNE 16,2023.
2. MAINE UNIFORM BUILDING AND ENERGY CODE (MUBEC).
3. AMERICAN CONCRETE INSTITUTE (ACI) 318-14: BUILDING CODE REQUIREMENTS FOR STRUCTURAL CONCRETE, 2014 ED.
4. CONCRETE REINFORCING STEEL INSTITUTE (CRSI):
5. AMERICAN INSTITUTE FOR STEEL CONSTRUCTION (AISC) STEEL CONSTRUCTION MANUAL, 15TH ED.
6. ALUMINUM ASSOCIATION, ALUMINUM DESIGN MANUAL, 2015 ED.
7. AMERICAN WOOD COUNCIL, NATIONAL DESIGN SPECIFICATIONS (NDS) FOR WOOD CONSTRUCTION, 2015 ED.

SITE CONTROL AND BASELINES:

1. PROJECT BASE PLAN HAS BEEN DEVELOPED FROM A COMPILATION OF MULTIPLE SURVEYS AS DESCRIBED UNDER "SURVEY AND PROPERTY NOTES".
2. ELEVATIONS ARE PROVIDED IN NAVD88 VERTICAL DATUM UNLESS OTHERWISE NOTED.
3. THE CONTRACTOR SHALL INSTALL SURVEY CONTROL AS NECESSARY TO PERFORM THE WORK. PERMANENT SURVEY CONTROL (AT LEAST 2 POINTS) SHALL BE ESTABLISHED FOR THE PROJECT AND PROTECTED FROM DAMAGE DURING CONSTRUCTION AND PROVIDED ON AS-BUILT DRAWINGS.
4. THE CONTRACTOR SHALL ESTABLISH AND MAINTAIN PROJECT BASELINES AND CONTROL AS REQUIRED TO ENSURE ACCURATE LOCATION OF ALL ELEMENTS OF THE PROJECT.

SURVEY AND PROPERTY NOTES:

1. LOCUS PARCEL IS DEPICTED ON CITY OF BIDDEFORD, TAX MAP 52, LOT 4 AND IS LOCATED IN THE INSTITUTIONAL (IN) ZONE. A PORTION OF THE SITE IS LOCATED IN THE LIMITED RESIDENTIAL (LR) SHORELAND OVERLAY DISTRICT.
2. THE RECORD OWNER IS THE UNIVERSITY OF NEW ENGLAND, BY DEED DATED APRIL 18, 1962, RECORDED IN THE YORK COUNTY REGISTRY OF DEEDS IN BOOK 1484, PAGE 0145.
3. UPLAND TOPOGRAPHY AND BASE SURVEY INFORMATION DEPICTED HEREON ARE BASED ON THE FOLLOWING SURVEYS:
   - "TOPOGRAPHIC SURVEY, MARINE SCIENCE CENTER, UNIVERSITY OF NEW ENGLAND" BY OWEN HASKELL, INC. DATED DEC. 13, 2022.
   - "TOPOGRAPHIC SURVEY AT MARINE SCIENCE CENTER" BY STATEWIDE SURVEYS, INC., DATED MAY 4, 2015.
4. HYDROGRAPHIC DATA DEPICTED HEREON IS BASED ON 2022 SURVEY BY OWEN HASKELL SURVEY.
5. FEDERAL CHANNEL LIMITS ARE DEPICTED BASED ON THE PLAN. "SACO RIVER, SACE AND BIDDEFORD, MAINE, CONDITION SURVEY" PUBLISHED BY THE U.S. ARMY CORPS OF ENGINEERS, DATED JULY 3, 2021.
6. HORIZONTAL COORDINATES ARE BASED ON NAD83 MAINE STATE PLANE WEST ZONE-1801 AND ARE EXPRESSED IN FEET. ELEVATIONS ARE BASED ON NAVD88 VERTICAL DATUM AND CONTROL POINTS PROVIDED BY UNE.
7. UTILITY INFORMATION DEPICTED HEREON IS BASED ON FEBRUARY 2023 UTILITY LOCATION SURVEY PERFORMED BY BLOOD HOUND, LLC UNDERGROUND UTILITY LOCATORS AND MAY NOT NECESSARILY REPRESENT ALL EXISTING UTILITIES. CONTACT DIG SAFE (1-888-DIG-SAFE) AND VERIFY EXISTING UTILITIES PRIOR TO ANY CONSTRUCTION OR EXCAVATION.
8. PORTIONS OF THE PROPERTY ARE DEPICTED AS BEING IN A SPECIAL FLOOD HAZARD AREA BASED ON FEMA PRELIMINARY FIRM 23031C0459G DATED APRIL 14, 2017. THE SITE IS LOCATED IN A VE ZONE HAVING BASE FLOOD ELEVATION OF 14 FT NAVD88.
9. SUBSURFACE INFORMATION IS BASED ON EXPLORATIONS PERFORMED IN 2015 AND 2022 CONSISTING OF BORINGS, PROBES, AND TEST PITS. REFER TO SHEETS B-001 - B-005 FOR SUBSURFACE INFORMATION.

CONCRETE

1. CAST IN PLACE CONCRETE SHALL CONFORM TO THE FOLLOWING SPECIFICATIONS BASED ON THE MAINE DOT STANDARD SPECIFICATION:

LOCATION	MDOT CLASS	f'c
ALL CONCRETE	CLASS LP	5,000 PSI

2. ALL REINFORCEMENT SHALL BE NEW DEFORMED BARS, GRADE 60 CONFORMING TO ASTM A615, HOT DIP GALVANIZED ACCORDING TO ASTM A767/A767M OR ASTM A1094/A1094M.
3. REINFORCEMENT ACCESSORIES SHALL BE DIELECTRIC COATED STEEL OR APPROVED PLASTIC.
3. GROUT SHALL BE A HIGH STRENGTH, NON-SHRINK GROUT WITH SALT WATER RESISTANCE.
4. CONCRETE COVER SHALL BE A MINIMUM OF 3 INCHES UNLESS NOTED OTHERWISE.
5. ALL EXPOSED EDGES OF CONCRETE AT COLD JOINTS SHALL HAVE A ROUGHENED FINISH AND BE COATED WITH EPOXY BONDING AGENT PRIOR TO CASTING ADJACENT POUR.
6. PROVIDE 1 INCH CHAMFER ON ALL EXPOSED EDGES UNLESS NOTED OR DIRECTED OTHERWISE.
7. TOP SURFACE OF EXPOSED CONCRETE SHALL RECEIVE A BROOM FINISH.
8. COAT FINISHED SURFACES OF CONCRETE WITH A 100% SILANE PENETRATING CONCRETE SEALER SUITABLE FOR USE IN A MARINE ENVIRONMENT. SEALER SHALL BE LISTED ON THE MAINE DOT QUALIFIED PRODUCTS LIST.
9. REINFORCEMENT DEVELOPMENT AND LAP SPLICE LENGTHS SHALL BE IN ACCORDANCE WITH ACI 318.
10. CONCRETE MIX DESIGN SHALL INCLUDE THE USE OF CORROSION INHIBITING ADMIXTURE AT DOSAGE SUITABLE FOR USE IN AN AGGRESSIVE MARINE ENVIRONMENT. CORROSION INHIBITOR SHALL BE LISTED ON THE MAINE DOT QUALIFIED PRODUCTS LIST.

EPOXY ANCHORS

1. ANCHOR ROD, WASHERS, AND NUTS SHALL CONFORM TO ASTM F1554, GRADE 36, AND SHALL BE HOT DIP GALVANIZED.
2. THE MINIMUM EDGE DISTANCE AND MINIMUM SPACING FOR ALL ANCHORS SHALL BE 6 BOLT DIAMETERS.
3. ALL HOLES SHALL BE DRILLED TO THE RECOMMENDED DIAMETER PER MANUFACTURERS REQUIREMENTS USING CARBIDE DRILL BITS MEETING ANSI B212.5-1994.
4. HOLES SHALL BE BRUSHED WITH NYLON BRUSH AND BLOWN CLEAN USING OIL-FREE COMPRESSED AIR A MINIMUM OF TWO TIMES.
5. ALL HOLES SHALL BE FREE OF STANDING WATER BEFORE INSTALLING ANCHORS.
6. EPOXY SHALL HAVE MINIMUM BOND STRENGTH OF 1,600 PSI @ 14 DAYS.

EARTHWORK

1. EARTHWORK MATERIALS SHALL MEET THE FOLLOWING SPECIFICATIONS:

AGGREGATE BASE	TYPE A (MDOT 703.06A)
AGGREGATE SUBBASE	TYPE D (MDOT 703.06C)
WALL BACKFILL	CRUSHED STONE $\frac{3}{4}$" (MDOT 703.13)
DRAINAGE STONE	CRUSHED STONE 2 INCH (MDOT 703.31)
ORDINARY BORROW	SEE #2 BELOW.

2. ORDINARY BORROW SHALL BE EXISTING GRANULAR SOIL WITH MAXIMUM 4 INCH STONE SUBJECT TO APPROVAL BY THE ENGINEER. ALL DEBRIS OR OTHER DELETERIOUS MATERIALS SHALL BE REMOVED FROM ORDINARY BORROW PRIOR TO REUSE.

STEEL

1. STEEL ANGLE, STRAPS, AND MISCELLANEOUS FABRICATIONS SHALL BE ASTM A36 HOT DIP GALVANIZED AFTER FABRICATION, UNLESS OTHERWISE NOTED.
2. ALL FASTENERS SHALL BE HOT-DIP GALVANIZED OR STAINLESS STEEL.
3. ALL BOLTS SHALL CONFORM TO ASTM A307. MINIMUM SIZE SHALL BE $\frac{5}{8}$ INCH UNLESS OTHERWISE NOTED.

HEAVY TIMBER

1. UNLESS OTHERWISE SPECIFIED, ALL TIMBER FRAMING TO BE USED SHALL BE NO. 1 AND BETTER SOUTHERN PINE AS GRADED BY SPIB AND WITH DESIGN VALUES PER NDS 2015.
2. ALL TIMBER SHALL BE NEW AND SUPPLIED WITH NOMINAL DIMENSIONS UNLESS OTHERWISE NOTED.
3. ALL NEW SOUTHERN YELLOW PINE TIMBER MEMBERS TO WHICH THE PUBLIC MAY BE EXPOSED SHALL BE TREATED WITH ALKALINE COPPER QUATERNARY (ACQ) IN ACCORDANCE WITH AWPA & AWPB W/ MINIMUM RETENTION OF 0.60 LBS. PER CUBIC FOOT. ALL OTHER SOUTHERN YELLOW PINE MEMBERS SHALL BE CCA TREATED TO 2.5 PCF RETENTION.
4. ALL EXPOSED EDGES SHALL BE PLANED OR SANDED TO PROVIDE SMOOTH SURFACE FREE OF ROUGH EDGES OR DEFECTS.
5. ALL EXPOSED FASTENERS SHALL BE COUNTERSUNK.
6. DOCK WASHERS SHALL BE PROVIDED BENEATH NUT OR BOLT HEAD OF ALL TIMBER BOLTED CONNECTIONS. TIMBER BOLTS SHALL BE CONSIDERED AN ACCEPTABLE ALTERNATIVE TO HEX HEADED BOLTS WITH DOCK WASHERS.
7. STANDARD WASHERS SHALL BE PERMISSIBLE WHERE CONNECTED PARTS INCLUDE STEEL PLATES, ANGLES, BRACKETS, OR BACKER PLATES.

TIMBER PILES

1. TIMBER PILES SHALL BE TROPICAL GREENHEART AND SHALL CONFORM TO ASTM D25.
2. PROVIDE PROTECTION TO PILE TIP AND BUTT TO AVOID DAMAGE DURING DRIVING.
3. PILES SHALL BE ORDERED MINIMUM 5 FT LONGER THAN TABULATED LENGTHS TO ALLOW FOR INSTALLATION VARIABILITY AND CUTOFF.
4. ALL TIMBER PILES SHALL BE DRIVEN TO THE MINIMUM EMBEDMENT OR CAPACITY CRITERIA INDICATED IN THE PILE SCHEDULE. FENDER PILES MAY BE INSTALLED TO THE REQUIRED DEPTH USING A VIBRATORY HAMMER. IN THE EVENT THAT A VIBRATORY HAMMER IS UNABLE TO ACHIEVE THE MINIMUM REQUIRED EMBEDMENT, THE CONTRACTOR WILL BE RESPONSIBLE FOR COMPLETING FINAL SET USING AN IMPACT HAMMER.
5. GREENHEART PILES SHALL BE BANDED WITH $1\frac{1}{2}$ INCH STAINLESS STEEL UTILITY STRAPPING PRIOR TO CUTOFF. REFER TO DETAIL ON SHEET S-009.

ASPHALT

1. PAVING GRADES SHALL PITCH TO EXISTING STRUCTURES.
2. PAVEMENT SHALL CONSIST OF 4" OF HOT MIX ASPHALT PLACED IN TWO COURSES, SEE DETAIL.
3. CONTRACTOR TO SAW CUT PAVEMENT AT LIMIT OF REMOVAL.
4. CONTRACTOR TO PROVIDE SMOOTH TRANSITIONS BETWEEN NEW AND EXISTING ASPHALT.
5. CONTRACTOR TO SEAL JOINT BETWEEN NEW AND EXISTING ASPHALT WITH BITUMINOUS JOINT SEALANT.

GEOTEXTILE

1. GEOTEXTILE SEPARATION FABRIC SHALL BE MIRAFI FW700 OR EQUIVALENT.
2. OVERLAP ALL SEAMS MINIMUM 2 FT.
3. INSTALL PER MANUFACTURERS RECOMMENDATIONS.

STEEL PIPE PILES

1. STEEL PIPE PILES SHALL CONFORM TO ASTM A252, GRADE 3.
2. ALL PILES SHALL BE SEAMLESS.
3. AN OPEN CUTTING SHOE IS REQUIRED.
4. PIPE PILES SHALL BE COATED WITH FUSION BONDED EPOXY, COLOR BROWN. MINIMUM COATING THICKNESS SHALL BE 18-20 MIL. COATING SHALL EXTEND FROM TOP OF PILE DOWN TO MINIMUM 5-FEET BELOW GRADE.
5. DAMAGE TO ANY STEEL COATING SHALL BE TOUCHED UP BY THE CONTRACTOR USING APPROVED MATERIALS AND METHODS.
6. ALL PILES SHALL BE FILLED TO THE TOP WITH CONCRETE AFTER INSTALLATION. ROCK-SOCKETED PILES SHALL BE CLEANED OUT AND FILLED FOR THEIR ENTIRE LENGTH PRIOR TO CONCRETE FILLING. DRIVEN PILES SHALL BE CLEANED OUT TO MINIMUM 10-FEET BELOW ADJACENT MUDLINE.
7. REFER TO PILE SCHEDULE ON SHEET S-005 FOR ESTIMATED PILE LENGTHS, COATING LENGTHS, SIZES, AND SOCKETING REQUIREMENTS.

TIMBER FLOATS

1. FLOAT MANUFACTURER SHALL SUBMIT SHOP DRAWINGS AND CALCULATIONS SIGNED AND SEALED BY A MAINE LICENSED PROFESSIONAL ENGINEER. MANUFACTURER SHALL BE RESPONSIBLE FOR FINAL DETERMINATION OF FLOAT FRAMING AND DRUM LAYOUT TO MEET BOUYANCY, LOADING, AND ENVIRONMENTAL EXPOSURE REQUIREMENTS IN ACCORDANCE WITH THE SPECIFICATIONS.
2. UNLESS OTHERWISE SPECIFIED, ALL TIMBER TO BE USED SHALL BE NO. 1 AND BETTER SOUTHERN PINE AS GRADED BY SPIB AND WITH DESIGN VALUES PER NFPA NATIONAL DESIGN SPECIFICATION OR THE EQUIVALENT FOR DOUGLAS FIR AS GRADED BY WCLIB AND WWPA.
3. ALL TIMBER SHALL BE NEW AND SUPPLIED WITH NOMINAL DIMENSIONS.
4. ALL TIMBER MEMBERS TO WHICH THE PUBLIC MAY BE EXPOSED SHALL BE TREATED WITH ALKALINE COPPER QUATERNARY (ACQ) IN ACCORDANCE WITH AWPA & AWPB W/ MINIMUM RETENTION OF 0.40 LBS. PER CUBIC FOOT. ALL OTHER SOUTHERN YELLOW PINE MEMBERS SHALL BE CCA TREATED TO 2.5 PCF RETENTION.
5. DECKING SHALL BE NO. 1 SOUTHERN PINE, MINIMUM SIZE 2X6.
6. MISC. HARDWARE: GALVANIZED STEEL PLATES AND ALL BOLTS AND RELATED HARDWARE SHALL BE FASHIONED FROM STEEL AND GALVANIZED AFTER FABRICATION AND IN ACCORDANCE WITH REQUIREMENTS OF ASTM A123, AND/OR A153. BOLTS AND NUTS SHALL CONFORM TO ASTM A307.
7. CONNECTION HARDWARE SHALL BE FABRICATED FROM ASTM-A36 GRADE STEEL WITH MINIMUM THICKNESS ¼".
8. PROVIDE GUIDE/WEARING BRACKETS AT GANGWAY LANDING ON FLOAT 'C' PER DETAIL A ON SHEET S-012. BRACKETS SHALL BE LOCATED IN FIELD TO BE CENTERED ON GANGWAY RANGE OF TRAVEL AT MID-TIDE ELEVATION.
9. TRANSITIONS BETWEEN FLOATING DOCKS SHALL INCLUDE ADA COMPLIANT TRANSITION PLATES ACROSS GAPS AT HINGE LOCATIONS.
10. FLOATING DOCKS SHALL MEET THE FOLLOWING LOADING AND FREEBOARD CRITERIA:

DEAD LOAD	20 INCH FREEBOARD
20 PSF UNIFORM LIVE LOAD	MINIMUM 8 INCH FREEBOARD
40 PSF UNIFORM LIVE LOAD	MINIMUM ZERO FREEBOARD

DEAD LOADS SHALL INCLUDE ALL COMPONENTS AND ATTACHMENTS INCLUDING WEIGHT OF ALUMINUM GANGWAY BEARING ON FLOAT 'C'.

ALUMINUM GANGWAY

1. GANGWAY MANUFACTURER SHALL SUBMIT SHOP DRAWINGS AND CALCULATIONS SIGNED AND SEALED BY A MAINE LICENSED PROFESSIONAL ENGINEER. MANUFACTURER SHALL BE RESPONSIBLE FOR FINAL DETERMINATION OF GANGWAY FRAMING AND CONFIGURATION TO MEET STRUCTURAL, PERFORMANCE, AND ACCESSIBILITY REQUIREMENTS IN ACCORDANCE WITH THE SPECIFICATIONS.
2. GANGWAY SHALL MEET THE FOLLOWING LOADING AND DEFLECTION CRITERIA:
   - DEAD LOAD SHALL CONSIST OF WEIGHT OF THE ENTIRE GANGWAY STRUCTURE PLUS ANY UTILITIES AND ATTACHMENTS.
   - ALLOWABLE STRESSES IN DECK SURFACE, GANGWAY FRAMING, AND MOUNTING COMPONENTS SHALL NOT BE EXCEEDED AT A UNIFORM LIVE LOAD OF 100 PSF.
   - 50 PSF UNIFORM LIVE LOAD MAX. DEFLECTION L/360
   - 100 PSF UNIFORM LIVE LOAD MAX. DEFLECTION NOT TO EXCEED GANGWAY CAMBER
   - ALL HANDRAIL AND POSTS SHALL BE DESIGNED TO WITHSTAND A 200 LB LOAD APPLIED IN ANY DIRECTION OR A 50 LB/FT LOAD APPLIED ALONG THE HANDRAIL LENGTH.
3. GANGWAY HINGES SHALL BE CAPABLE OF TRAVELING FREELY AND WITHOUT BINDING THROUGH THE ENTIRE RANGE OF WATER LEVELS FROM MLLW TO BASE FLOOD ELEVATION PLUS TWO-FEET OF ADDITIONAL ELEVATION IN EITHER DIRECTION.

FOR PERMIT

Attention:
0 1"
If this scale bar does not measure 1" then drawing is not original scale.

STATE OF MAINE
DANIEL J. BANNON
No. 13033
LICENSED PROFESSIONAL ENGINEER
April 22, 2024

Designed:	DJB
Drawn:	JAM
Checked:	BJB
Approved:	BMM
P.E. No:	13033
GEI Project	2203703

GEI Consultants
GEI CONSULTANTS, INC.
5 MILK STREET
PORTLAND, ME 04101
(207)797-8901

UNE
UNIVERSITY OF NEW ENGLAND
11 HILLS BEACH RD.
BIDDEFORD, MAINE

UNIVERSITY OF NEW ENGLAND
MARINE SCIENCE CENTER PIER
11 HILLS BEACH ROAD
BIDDEFORD, YORK COUNTY, MAINE

NO	DATE	ISSUE/REVISION	APP
4	9/14/2023	DEP PERMIT SET	DJB
3	6/28/2023	75% DESIGN SUBMISSION	DJB
2	2/15/2023	30% DESIGN SUBMISSION	DJB
1	12/9/2022	15% DESIGN SUBMISSIONREV	DJB
0	11/11/2022	15% DESIGN SUBMISSION	DJB

SHEET NAME
GENERAL NOTES

SHEET NO.
G-002

MORICI, ANTHONY \\geiconsultants.com\data\Data_Storage\Working\UNIVERSITY OF NEW ENGLAND\2203703 UNE Marine Science Center Pier\00_CAD\Design\Sheets\2203703-G-002.dwg - 9/14/2023



0 200 400
SCALE, FEET

FOR PERMIT

Attention:
0 1"
If this scale bar does not measure 1" then drawing is not original scale.

STATE OF MAINE
DANIEL J. BANNON
No. 13033
LICENSED PROFESSIONAL ENGINEER
April 22, 2024

Designed:	DJB
Drawn:	JAM
Checked:	BJB
Approved:	BMM
P.E. No:	13033
GEI Project	2203703

GEI Consultants
GEI CONSULTANTS, INC.
5 MILK STREET
PORTLAND, ME 04101
(207)797-8901

UNE
UNIVERSITY OF NEW ENGLAND
11 HILLS BEACH RD.
BIDDEFORD, MAINE

UNIVERSITY OF NEW ENGLAND MARINE SCIENCE CENTER PIER

11 HILLS BEACH ROAD
BIDDEFORD, YORK COUNTY, MAINE

NO	DATE	ISSUE/REVISION	APP
5	4/22/2024	REV. SHT. G-003	DJB
4	9/14/2023	DEP PERMIT SET	DJB
3	6/28/2023	75% DESIGN SUBMISSION	DJB
2	2/15/2023	30% DESIGN SUBMISSION	DJB
1	12/9/2022	15% DESIGN SUBMISSIONREV	DJB
0	11/11/2022	15% DESIGN SUBMISSION	DJB

SHEET NAME: **VICINITY PLAN**

SHEET NO.: **G-003**

DOYLE.JESSY \\geiconsultants.com\data\Data_Storage\Working\UNIVERSITY OF NEW ENGLAND\2203703 UNE Marine Science Center Pier\00_CAD\Design\Sheets\2203703-G-003.dwg - 4/22/2024

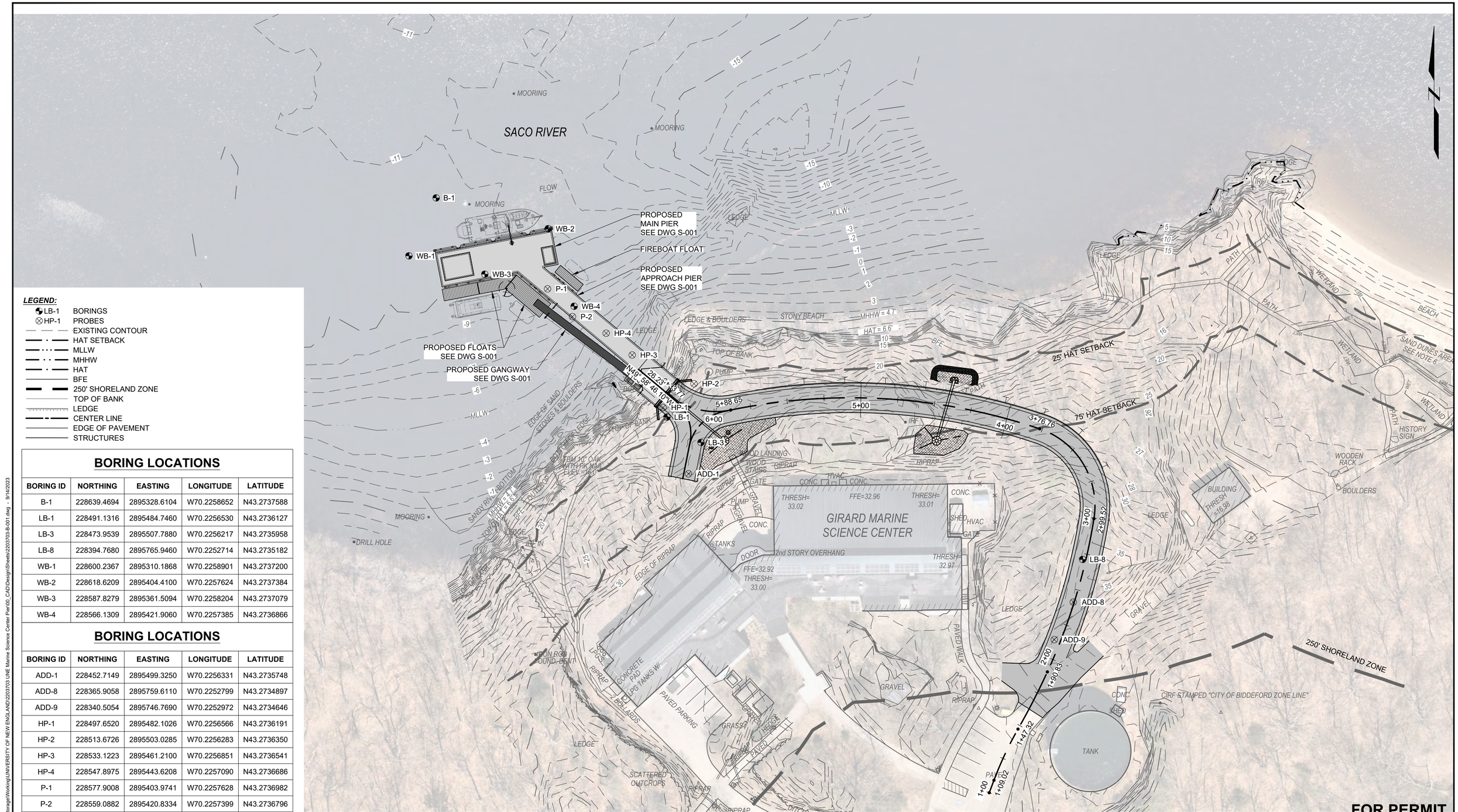

LEGEND:

- LB-1 BORINGS
- HP-1 PROBES
- EXISTING CONTOUR
- HAT SETBACK
- MLLW
- MHHW
- HAT
- BFE
- 250' SHORELAND ZONE
- TOP OF BANK
- LEDGE
- CENTER LINE
- EDGE OF PAVEMENT
- STRUCTURES

BORING LOCATIONS

BORING ID	NORTHING	EASTING	LONGITUDE	LATITUDE
B-1	228639.4694	2895328.6104	W70.2258652	N43.2737588
LB-1	228491.1316	2895484.7460	W70.2256530	N43.2736127
LB-3	228473.9539	2895507.7880	W70.2256217	N43.2735958
LB-8	228394.7680	2895765.9460	W70.2252714	N43.2735182
WB-1	228600.2367	2895310.1868	W70.2258901	N43.2737200
WB-2	228618.6209	2895404.4100	W70.2257624	N43.2737384
WB-3	228587.8279	2895361.5094	W70.2258204	N43.2737079
WB-4	228566.1309	2895421.9060	W70.2257385	N43.2736866

BORING LOCATIONS

BORING ID	NORTHING	EASTING	LONGITUDE	LATITUDE
ADD-1	228452.7149	2895499.3250	W70.2256331	N43.2735748
ADD-8	228365.9058	2895759.6110	W70.2252799	N43.2734897
ADD-9	228340.5054	2895746.7690	W70.2252972	N43.2734646
HP-1	228497.6520	2895482.1026	W70.2256566	N43.2736191
HP-2	228513.6726	2895503.0285	W70.2256283	N43.2736350
HP-3	228533.1223	2895461.2100	W70.2256851	N43.2736541
HP-4	228547.8975	2895443.6208	W70.2257090	N43.2736686
P-1	228577.9008	2895403.9741	W70.2257628	N43.2736982
P-2	228559.0882	2895420.8334	W70.2257399	N43.2736796

ELEVATION	MLLW	NAVD88*
BFE	+19.0	+14.0
HAT	+11.6	+6.6
MHHW	+9.7	+4.7
MHW	+9.3	+4.3
MSL	+4.8	-0.2
MLW	+0.3	-4.7
MLLW	0.0	-5.0

*PROJECT DATUM

0 30 60
SCALE, FEET

Attention:
0 1"
If this scale bar does not measure 1" then drawing is not original scale.

STATE OF MAINE
DANIEL J. BANNON
No. 13033
REGISTERED PROFESSIONAL ENGINEER
April 22, 2024

Designed:	DJB
Drawn:	JAM
Checked:	BJB
Approved:	BMM
P.E. No:	13033
GEI Project	2203703

GEI Consultants
GEI CONSULTANTS, INC.
5 MILK STREET
PORTLAND, ME 04101
(207)797-8901

UNE
UNIVERSITY OF NEW ENGLAND
11 HILLS BEACH RD.
BIDDEFORD, MAINE

UNIVERSITY OF NEW ENGLAND MARINE SCIENCE CENTER PIER

11 HILLS BEACH ROAD
BIDDEFORD, YORK COUNTY, MAINE

NO	DATE	ISSUE/REVISION	APP
4	9/14/2023	DEP PERMIT SET	DJB
3	6/28/2023	75% DESIGN SUBMISSION	DJB
2	2/15/2023	30% DESIGN SUBMISSION	DJB
1	12/9/2022	15% DESIGN SUBMISSIONREV	DJB
0	11/11/2022	15% DESIGN SUBMISSION	DJB

SHEET NAME
BORING LOCATION PLAN

SHEET NO.
B-001

FOR PERMIT

MORICI, ANTHONY \\geiconsultants.com\data\Data_Storage\Working\UNIVERSITY OF NEW ENGLAND\2203703 UNE Marine Science Center Pier\00_CAD\Design\Sheets\2203703-B-001.dwg - 9/14/2023



LEGEND:

- EXISTING CONTOUR
- HAT SETBACK
- MLLW
- MHHW
- HAT
- BFE
- 250' SHORELAND ZONE
- TOP OF BANK
- LEDGE
- STRUCTURES

SURVEY AND PROPERTY NOTES:

1. LOCUS PARCEL IS DEPICTED ON CITY OF BIDDEFORD, TAX MAP 52, LOT 4 AND IS LOCATED IN THE INSTITUTIONAL (IN) ZONE. A PORTION OF THE SITE IS LOCATED IN THE LIMITED RESIDENTIAL (LR) SHORELAND OVERLAY DISTRICT.
2. THE RECORD OWNER IS THE UNIVERSITY OF NEW ENGLAND, BY DEED DATED APRIL 18, 1962, RECORDED IN THE YORK COUNTY REGISTRY OF DEEDS IN BOOK 1484, PAGE 0145.
3. UPLAND TOPOGRAPHY AND BASE SURVEY INFORMATION DEPICTED HEREON ARE BASED ON THE FOLLOWING SURVEYS:
   - "TOPOGRAPHIC SURVEY, MARINE SCIENCE CENTER, UNIVERSITY OF NEW ENGLAND" BY OWEN HASKELL, INC. DATED DEC. 13, 2022.
   - "TOPOGRAPHIC SURVEY AT MARINE SCIENCE CENTER" BY STATEWIDE SURVEYS, INC., DATED MAY 4, 2015.
4. HYDROGRAPHIC DATA DEPICTED HEREON IS BASED ON 2022 SURVEY BY OWEN HASKELL SURVEY.
5. FEDERAL CHANNEL LIMITS ARE DEPICTED BASED ON THE PLAN. "SACO RIVER, SACE AND BIDDEFORD, MAINE, CONDITION SURVEY" PUBLISHED BY THE U.S. ARMY CORPS OF ENGINEERS, DATED JULY 3, 2021.
6. HORIZONTAL COORDINATES ARE BASED ON NAD83 MAINE STATE PLANE WEST ZONE-1801 AND ARE EXPRESSED IN FEET. ELEVATIONS ARE BASED ON NAVD88 VERTICAL DATUM.
7. UTILITY INFORMATION DEPICTED HEREON IS BASED ON FEBRUARY 2023 UTILITY LOCATION SURVEY PERFORMED BY BLOOD HOUND, LLC UNDERGROUND UTILITY LOCATORS AND MAY NOT NECESSARILY REPRESENT ALL EXISTING UTILITIES. CONTACT DIG SAFE (1-888-DIG-SAFE) AND VERIFY EXISTING UTILITIES PRIOR TO ANY CONSTRUCTION OR EXCAVATION.
8. PORTIONS OF THE PROPERTY ARE DEPICTED AS BEING IN A SPECIAL FLOOD HAZARD AREA BASED ON FEMA PRELIMINARY FIRM 23031C0459G DATED APRIL 14, 2017. THE SITE IS LOCATED IN A VE ZONE HAVING BASE FLOOD ELEVATION OF 14 FT NAVD88.
9. SUBSURFACE INFORMATION IS BASED ON EXPLORATIONS PERFORMED IN 2015 AND 2022 CONSISTING OF BORINGS, PROBES, AND TEST PITS. REFER TO SHEETS B-001 - B-005 FOR SUBSURFACE INFORMATION.
10. BENCHMARKS:

0 30 60
SCALE, FEET

ELEVATION	MLLW	NAVD88*
BFE	+19.0	+14.0
HAT	+11.6	+6.6
MHHW	+9.7	+4.7
MHW	+9.3	+4.3
MSL	+4.8	-0.2
MLW	+0.3	-4.7
MLLW	0.0	-5.0

*PROJECT DATUM

FOR PERMIT

Attention:
0 1"
If this scale bar does not measure 1" then drawing is not original scale.

STATE OF MAINE DANIEL J. BANNON No. 13033 PROFESSIONAL LICENSED ENGINEER
April 22, 2024

Designed:	DJB
Drawn:	JAM
Checked:	BJB
Approved:	BMM
P.E. No:	13033
GEI Project	2203703

GEI Consultants
GEI CONSULTANTS, INC.
5 MILK STREET
PORTLAND, ME 04101
(207)797-8901

UNE
UNIVERSITY OF NEW ENGLAND
11 HILLS BEACH RD.
BIDDEFORD, MAINE

UNIVERSITY OF NEW ENGLAND MARINE SCIENCE CENTER PIER

11 HILLS BEACH ROAD
BIDDEFORD, YORK COUNTY, MAINE

NO	DATE	ISSUE/REVISION	APP
4	9/14/2023	DEP PERMIT SET	DJB
3	6/28/2023	75% DESIGN SUBMISSION	DJB
2	2/15/2023	30% DESIGN SUBMISSION	DJB
1	12/9/2022	15% DESIGN SUBMISSIONREV	DJB
0	11/11/2022	15% DESIGN SUBMISSION	DJB

SHEET NAME
EXISTING CONDITIONS PLAN

SHEET NO.
C-001

MORICI, ANTHONY \\geiconsultants.com\data\Data_Storage\Working\UNIVERSITY OF NEW ENGLAND\2203703 UNE Marine Science Center Pier\00_CAD\Design\Sheets\2203703-C-001.dwg - 9/14/2023

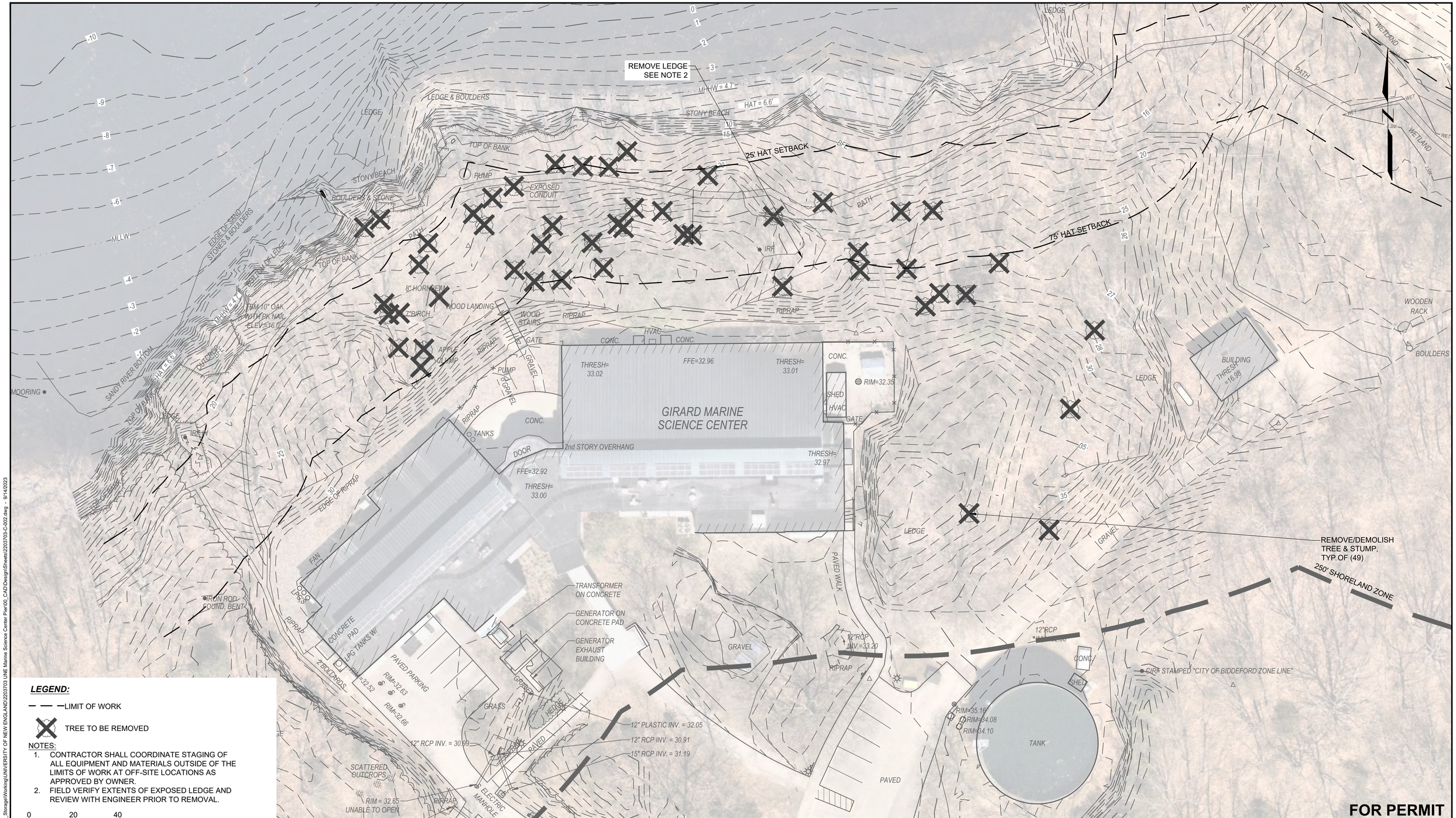

LEGEND:

— — —LIMIT OF WORK

TREE TO BE REMOVED

NOTES:

1. CONTRACTOR SHALL COORDINATE STAGING OF ALL EQUIPMENT AND MATERIALS OUTSIDE OF THE LIMITS OF WORK AT OFF-SITE LOCATIONS AS APPROVED BY OWNER.
2. FIELD VERIFY EXTENTS OF EXPOSED LEDGE AND REVIEW WITH ENGINEER PRIOR TO REMOVAL.

0 20 40
SCALE, FEET

ELEVATION	MLLW	NAVD88*
BFE	+19.0	+14.0
HAT	+11.6	+6.6
MHHW	+9.7	+4.7
MHW	+9.3	+4.3
MSL	+4.8	-0.2
MLW	+0.3	-4.7
MLLW	0.0	-5.0

*PROJECT DATUM

FOR PERMIT

Attention:
0 1"
If this scale bar does not measure 1" then drawing is not original scale.

STATE OF MAINE
DANIEL J. BANNON
No. 13033
PROFESSIONAL LICENSED ENGINEER
April 22, 2024

Designed:	DJB
Drawn:	JAM
Checked:	BJB
Approved:	BMM
P.E. No:	13033
GEI Project	2203703

GEI Consultants
GEI CONSULTANTS, INC.
5 MILK STREET
PORTLAND, ME 04101
(207)797-8901

UNIVERSITY OF NEW ENGLAND
11 HILLS BEACH RD.
BIDDEFORD, MAINE

UNIVERSITY OF NEW ENGLAND
MARINE SCIENCE CENTER PIER
11 HILLS BEACH ROAD
BIDDEFORD, YORK COUNTY, MAINE

NO	DATE	ISSUE/REVISION	APP
4	9/14/2023	DEP PERMIT SET	DJB
3	6/28/2023	75% DESIGN SUBMISSION	DJB
2	2/15/2023	30% DESIGN SUBMISSION	DJB
1	12/9/2022	15% DESIGN SUBMISSIONREV	DJB
0	11/11/2022	15% DESIGN SUBMISSION	DJB

SHEET NAME
DEMOLITION AND CONSTRUCTION STAGING

SHEET NO.
C-002

MORICI, ANTHONY \\geiconsultants.com\data\Data_Storage\Working\UNIVERSITY OF NEW ENGLAND\2203703 UNE Marine Science Center Pier\00_CAD\Design\Sheets\2203703-C-002.dwg - 9/14/2023

PROPOSED PIER SYSTEM
(SEE SHEETS S-001 - S-004).

REROUTE BEACH
ACCESS PATH
(BY OTHERS).

LEDGE & BOULDERS

LEDGE

STONY BEACH

TOP OF BANK

25' HAT SETBACK

PUMP

RIPRAP

R= 40'

N49°58'46"W

26.23'

6+33.77

6+00

5+88.65

5+00

PATH

EDGE OF SAND
STONES & BOULDERS

BOTTOM OF LEDGE

TOP OF BANK

R=20'

PROPOSED STORMWATER
COLLECTION RAIN GARDENS

R=20'

IRF

4+00

3+76.76

75' HAT SETBACK

INSTALL 300 LF
GUARDRAIL (SEE DETAIL).

LIMITS OF VEGETATION
CLEARING, TYP.

TBM 10" OAK
WITH PK NAIL
ELEV.=16.0'

ACCESS ROAD
TURNAROUND.

WOOD LANDING

WOOD
STAIRS

RIPRAP

RIPRAP

GATE

CONC.

HVAC

CONC.

THRESH=
33.02

FFE=32.96

THRESH=
33.01

CONC.

SHED
HVAC

GATE

PROPOSED (2) "NO VEHICULAR
ACCESS BEYOND THIS POINT"
SIGNS, TYP. (SEE DETAIL)

PUMP

GRAVEL

RIPRAP

TANKS

CONC.

GIRARD MARINE
SCIENCE CENTER

2nd STORY OVERHANG

DOOR

FFE=32.92

THRESH=
33.00

THRESH=
32.97

3+00

2+99.52

WOODEN
RACK

BOULDERS

LEDGE

BUILDING
THRESH
=16.98

SANDY RIVER BOTTOM

OUTCROP

TOP OF BANK

LEDGE

IRF IN

TOP OF BANK

EDGE OF RIPRAP

IRON ROD
FOUND, BENT

DOOR

LEDGE

RIPRAP

CONCRETE
PAD

LPG TANKS W/

PROPOSED R-1-1 30"X 30"
STOP SIGN, TYP
(SEE DETAIL).

LEDGE

8'
TYP

8'
TYP

2' WIDE
SHOULDER,
TYP.

GRAVEL

PROPOSED PAVED
ACCESS ROAD
(SEE DETAIL, SHEET C-008).

250' SHORELAND ZONE

PAVED WALK

2+00

R2'

R10'

1+90.83

PROPOSED 24" WIDE WHITE
STOP BAR, TYP (SEE DETAIL).

GRAVEL

PROPOSED SAWCUT AND
SEALING OF EXISTING
PAVEMENT. MATCH INTO
EXISTING PAVEMENT TYP.

RIPRAP

CONC.

SHED

1+47.32

TANK

PAVED

1+00

1+09.02

N: 228236.91
E: 2895702.79

CIRF STAMPED "CITY OF BIDDEFORD ZONE LINE"

PAVED PARKING

GRAVEL

GRASS

HEDGE

RIPBAP

PAVED

RIPRAP

0 20 40
SCALE, FEET

CENTERLINE ALIGNMENT TABLE

SEGMENT ID	START	END	LENGTH (FEET)	CHORD LENGTH (FEET)	CURVE RADIUS (FEET)	DELTA ANGLE (DEGREES, MIN, SEC)
1	1+00	1+09.02	9.02			
2	1+09.02	1+47.32	38.30	38.26	241.93	9d4'13"
3	1+47.32	1+90.83	43.51	43.50	500.00	4d59'10"
4	1+90.83	2+99.52	108.69	108.35	400.00	15d34'5"
5	2+99.52	3+76.76	77.24	71.05	55.00	80d27'50"
6	3+76.76	5+88.65	211.89	209.42	400.00	30d21'2"
7	5+88.65	6+33.77	45.13	43.61	50.00	51d42'47"
8	6+33.77	6+60	26.23			

ELEVATION	MLLW	NAVD88*
BFE	+19.0	+14.0
HAT	+11.6	+6.6
MHHW	+9.7	+4.7
MHW	+9.3	+4.3
MSL	+4.8	-0.2
MLW	+0.3	-4.7
MLLW	0.0	-5.0

*PROJECT DATUM

Attention:
0 1"
If this scale bar does not measure 1" then drawing is not original scale.

STATE OF MAINE
DANIEL J. BANNON
No. 13033
PROFESSIONAL ENGINEER
LICENSED
April 22, 2024

Designed:	DJB
Drawn:	JAM
Checked:	BJB
Approved:	BMM
P.E. No:	13033
GEI Project	2203703

GEI Consultants
GEI CONSULTANTS, INC.
5 MILK STREET
PORTLAND, ME 04101
(207)797-8901

UNE
UNIVERSITY OF
NEW ENGLAND
11 HILLS BEACH RD.
BIDDEFORD, MAINE

UNIVERSITY OF NEW ENGLAND MARINE SCIENCE CENTER PIER

11 HILLS BEACH ROAD
BIDDEFORD, YORK COUNTY, MAINE

NO	DATE	ISSUE/REVISION	APP
4	9/14/2023	DEP PERMIT SET	DJB
3	6/28/2023	75% DESIGN SUBMISSION	DJB
2	2/15/2023	30% DESIGN SUBMISSION	DJB
1	12/9/2022	15% DESIGN SUBMISSIONREV	DJB
0	11/11/2022	15% DESIGN SUBMISSION	DJB

SHEET NAME
SITE PLAN

SHEET NO.
C-003

FOR PERMIT

MORICI, ANTHONY \\geiconsultants.com\data\Data_Storage\Working\UNIVERSITY OF NEW ENGLAND\2203703 UNE Marine Science Center Pier\00_CAD\Design\Sheets\2203703-C-003.dwg - 9/14/2023

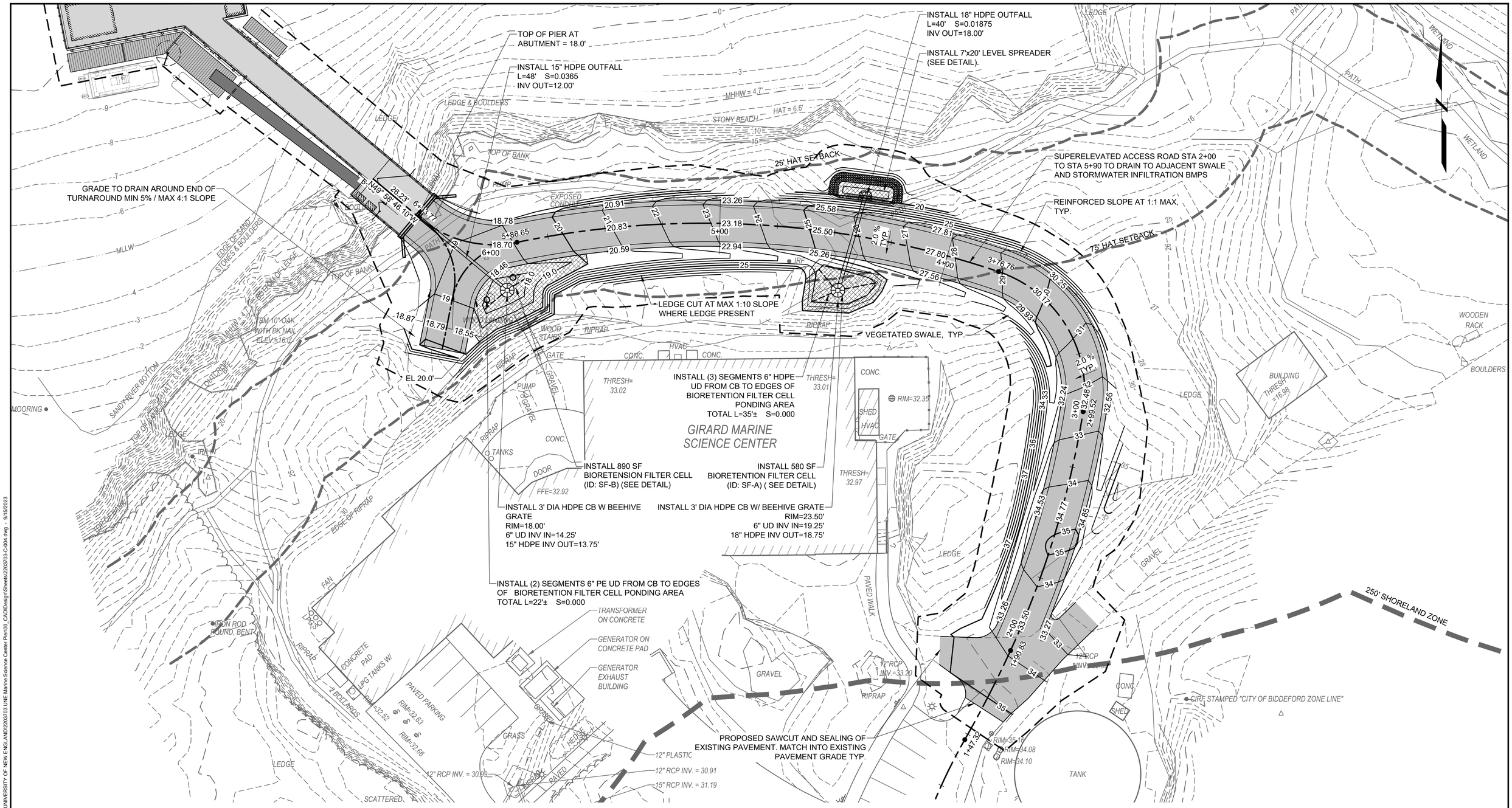

PLAN

SCALE: 1" = 20'

FOR PERMIT

Attention:

0 1"

If this scale bar does not measure 1" then drawing is not original scale.

0 20 40

SCALE, FEET

STATE OF MAINE
DANIEL J. BANNON
No. 13033
LICENSED
PROFESSIONAL ENGINEER

April 22, 2024

Designed:	DJB
Drawn:	JAM
Checked:	BJB
Approved:	BMM
P.E. No:	13033
GEI Project	2203703

GEI Consultants
GEI CONSULTANTS, INC.
5 MILK STREET
PORTLAND, ME 04101
(207)797-8901

UNIVERSITY OF
NEW ENGLAND

11 HILLS BEACH RD.
BIDDEFORD, MAINE

UNIVERSITY OF NEW ENGLAND MARINE SCIENCE CENTER PIER

11 HILLS BEACH ROAD
BIDDEFORD, YORK COUNTY, MAINE

NO	DATE	ISSUE/REVISION	APP
4	9/14/2023	DEP PERMIT SET	DJB
3	6/28/2023	75% DESIGN SUBMISSION	DJB
2	2/15/2023	30% DESIGN SUBMISSION	DJB
1	12/9/2022	15% DESIGN SUBMISSIONREV	DJB
0	11/11/2022	15% DESIGN SUBMISSION	DJB

SHEET NAME

GRADING AND DRAINAGE PLAN

SHEET NO.

C-004

MORICI, ANTHONY \\gisconsultants.com\data\Data_Storage\Working\UNIVERSITY OF NEW ENGLAND\2203703 UNE Marine Science Center Pier\00_CAD\Design\Sheets\2203703-C-004.dwg - 9/15/2023

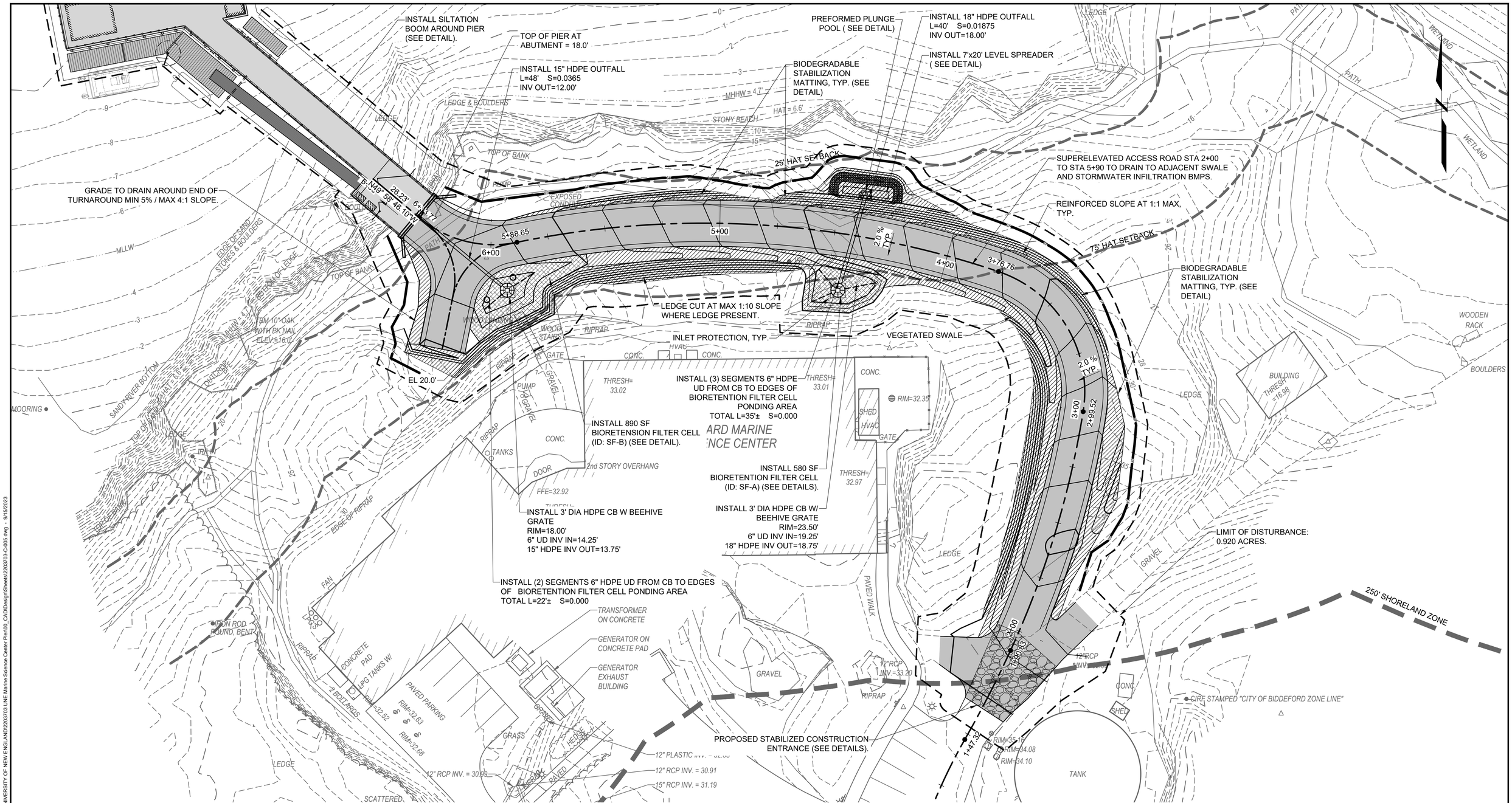

PLAN

SCALE: 1" = 20'

NOTE:
CONTRACTOR SHALL INSTALL BIODEGRADABLE STABILIZATION MATTING WHEREVER PROPOSED SLOPES EXCEED 5H:1V.

FOR PERMIT

Attention:
0 1"
If this scale bar does not measure 1" then drawing is not original scale.

0 20 40
SCALE, FEET

STATE OF MAINE
DANIEL J. BANNON
No. 13033
LICENSED PROFESSIONAL ENGINEER
April 22, 2024

Designed:	DJB
Drawn:	JAM
Checked:	BJB
Approved:	BMM
P.E. No:	13033
GEI Project	2203703

GEI Consultants
GEI CONSULTANTS, INC.
5 MILK STREET
PORTLAND, ME 04101
(207)797-8901

UNIVERSITY OF NEW ENGLAND
11 HILLS BEACH RD.
BIDDEFORD, MAINE

UNIVERSITY OF NEW ENGLAND MARINE SCIENCE CENTER PIER
11 HILLS BEACH ROAD
BIDDEFORD, YORK COUNTY, MAINE

NO	DATE	ISSUE/REVISION	APP
4	9/14/2023	DEP PERMIT SET	DJB
3	6/28/2023	75% DESIGN SUBMISSION	DJB
2	2/15/2023	30% DESIGN SUBMISSION	DJB
1	12/9/2022	15% DESIGN SUBMISSIONREV	DJB
0	11/11/2022	15% DESIGN SUBMISSION	DJB

SHEET NAME: **EROSION CONTROL PLAN**

SHEET NO.: **C-005**

MORICI, ANTHONY \\geiconsultants.com\data\Data_Storage\Working\UNIVERSITY OF NEW ENGLAND\2203703 UNE Marine Science Center Pier\00_CAD\Design\Sheets\2203703-C-005.dwg - 9/15/2023

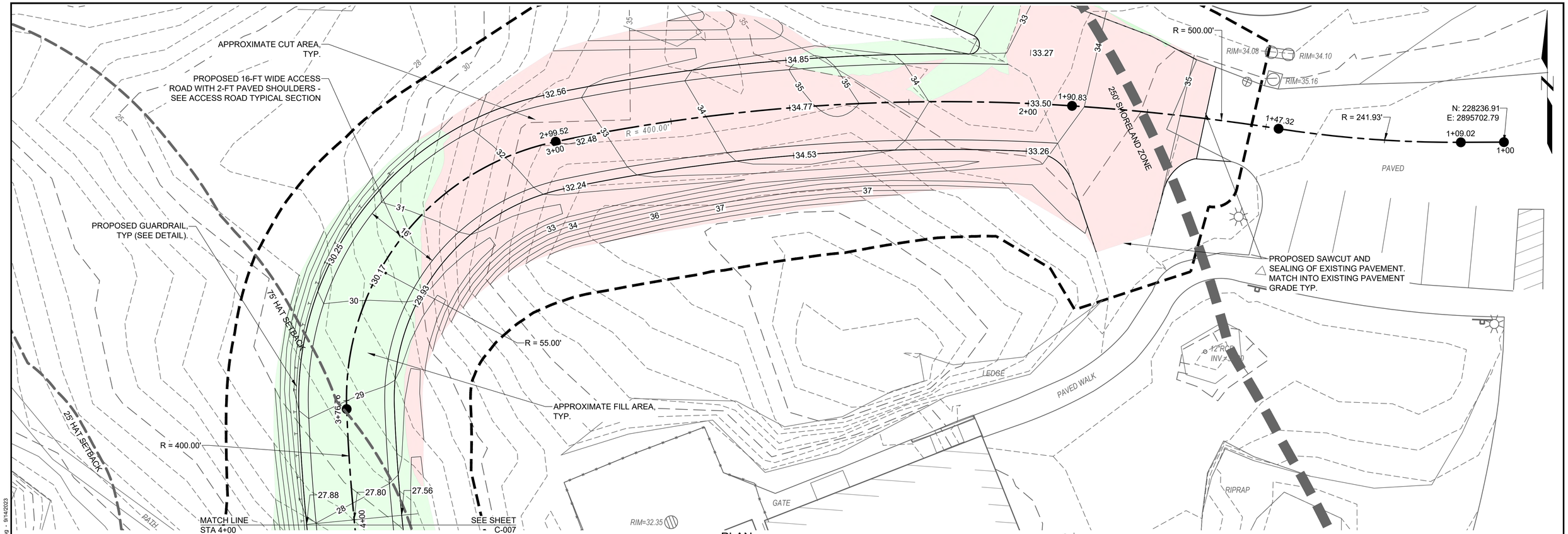

PLAN

SCALE: 1" = 10'

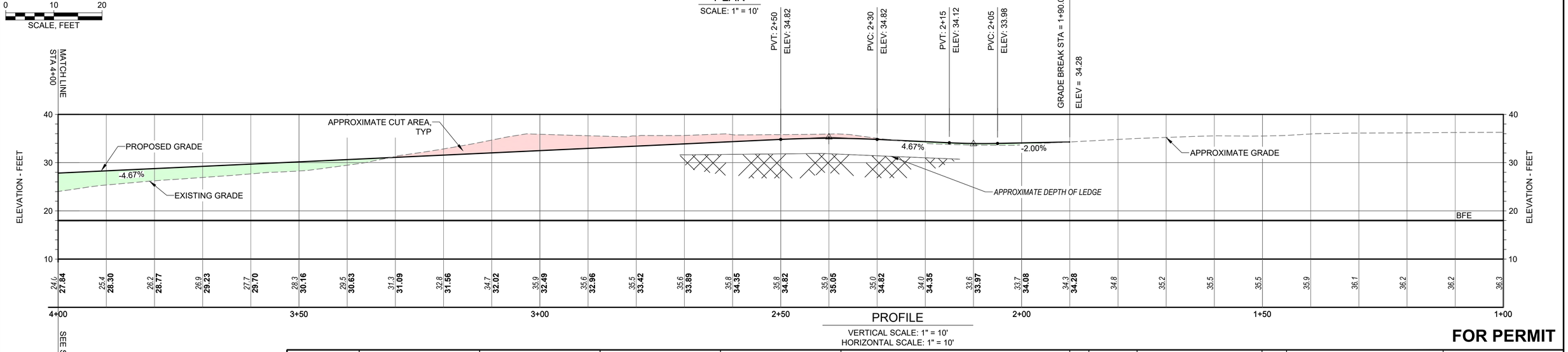

PROFILE

VERTICAL SCALE: 1" = 10'
HORIZONTAL SCALE: 1" = 10'

0 10 20

SCALE, FEET

FOR PERMIT

Attention:

0 1"

If this scale bar does not measure 1" then drawing is not original scale.

STATE OF MAINE — DANIEL J. BANNON No. 13033 — LICENSED PROFESSIONAL ENGINEER

April 22, 2024

Designed:	DJB
Drawn:	JAM
Checked:	BJB
Approved:	BMM
P.E. No:	13033
GEI Project	2203703

GEI Consultants

GEI CONSULTANTS, INC.
5 MILK STREET
PORTLAND, ME 04101
(207)797-8901

UNIVERSITY OF NEW ENGLAND

11 HILLS BEACH RD.
BIDDEFORD, MAINE

UNIVERSITY OF NEW ENGLAND MARINE SCIENCE CENTER PIER

11 HILLS BEACH ROAD
BIDDEFORD, YORK COUNTY, MAINE

NO	DATE	ISSUE/REVISION	APP
4	9/14/2023	DEP PERMIT SET	DJB
3	6/28/2023	75% DESIGN SUBMISSION	DJB
2	2/15/2023	30% DESIGN SUBMISSION	DJB
1	12/9/2022	15% DESIGN SUBMISSIONREV	DJB
0	11/11/2022	15% DESIGN SUBMISSION	DJB

SHEET NAME

ACCESS ROAD PLAN AND PROFILE STA 1+00 TO 4+00

SHEET NO.

C-006

MORICI, ANTHONY \\geiconsultants.com\data\Data_Storage\Working\UNIVERSITY OF NEW ENGLAND\2203703 UNE Marine Science Center Pier\00_CAD\Design\Sheets\2203703-C-006 C-007.dwg - 9/14/2023

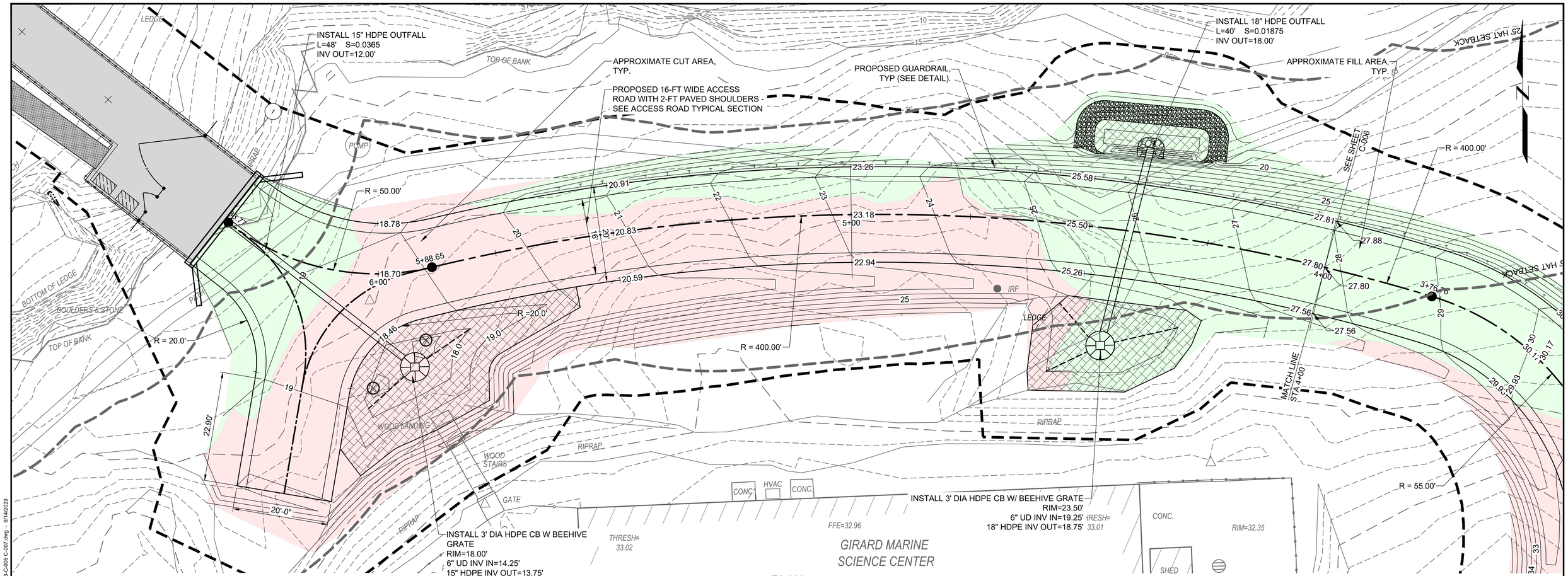

PLAN

SCALE: 1" = 10'

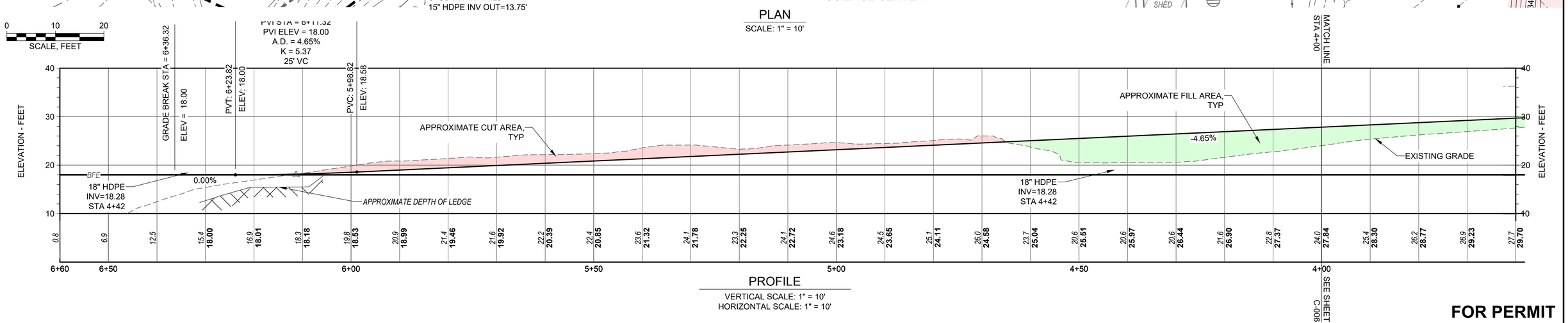

PROFILE

VERTICAL SCALE: 1" = 10'
HORIZONTAL SCALE: 1" = 10'

FOR PERMIT

Attention:

0 1"

If this scale bar does not measure 1" then drawing is not original scale.

STATE OF MAINE — DANIEL J. BANNON No. 13033 — LICENSED PROFESSIONAL ENGINEER

April 22, 2024

Designed:	DJB
Drawn:	JAM
Checked:	BJB
Approved:	BMM
P.E. No:	13033
GEI Project	2203703

GEI Consultants
GEI CONSULTANTS, INC.
5 MILK STREET
PORTLAND, ME 04101
(207)797-8901

UNE
UNIVERSITY OF NEW ENGLAND
11 HILLS BEACH RD.
BIDDEFORD, MAINE

UNIVERSITY OF NEW ENGLAND MARINE SCIENCE CENTER PIER
11 HILLS BEACH ROAD
BIDDEFORD, YORK COUNTY, MAINE

NO	DATE	ISSUE/REVISION	APP
4	9/14/2023	DEP PERMIT SET	DJB
3	6/28/2023	75% DESIGN SUBMISSION	DJB
2	2/15/2023	30% DESIGN SUBMISSION	DJB
1	12/9/2022	15% DESIGN SUBMISSIONREV	DJB
0	11/11/2022	15% DESIGN SUBMISSION	DJB

SHEET NAME

ACCESS ROAD PLAN AND PROFILE STA 4+00 TO STA 6+60

SHEET NO.

C-007

MORICI ANTHONY \\geiconsultants.com\data\Data_Storage\Working\UNIVERSITY OF NEW ENGLAND\2203703 UNE Marine Science Center Pier\00_CAD\Design\Sheets\2203703-C-006 C-007.dwg - 9/14/2023

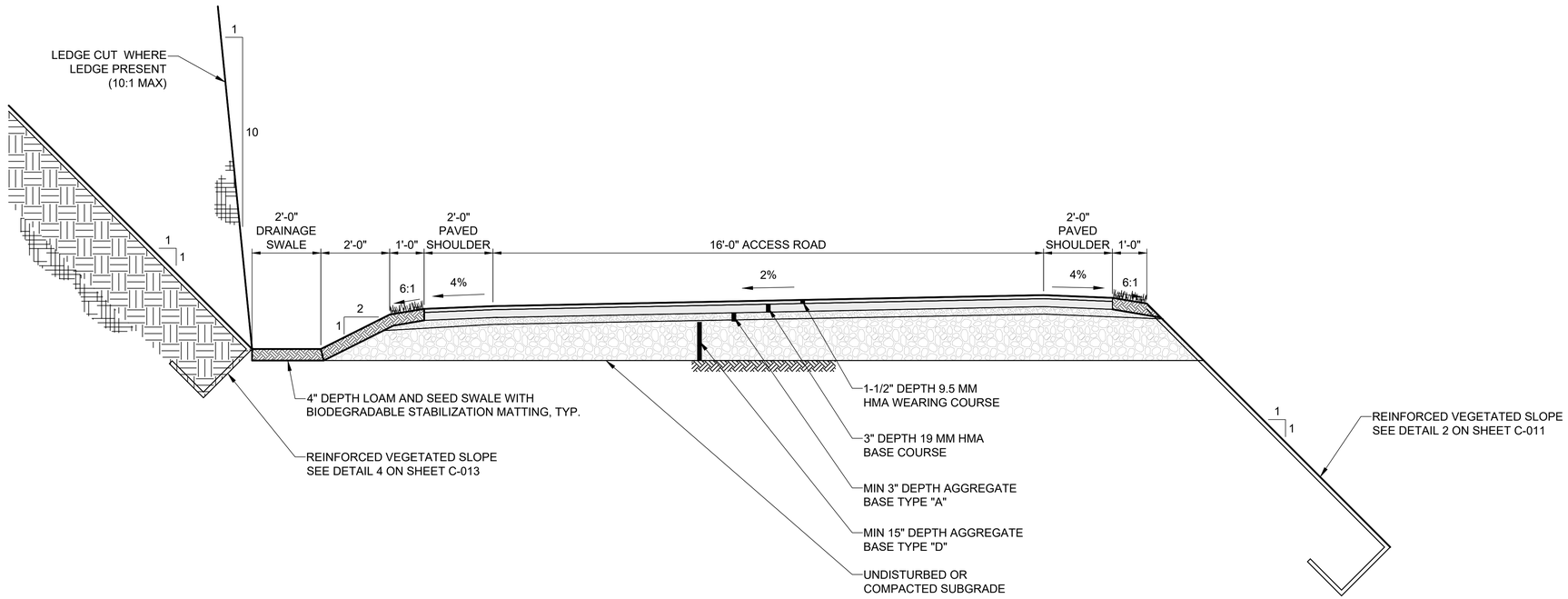

TYPICAL ACCESS ROAD SECTION

SCALE: NTS

FOR PERMIT

Attention:

0 1"

If this scale bar does not measure 1" then drawing is not original scale.

STATE OF MAINE
DANIEL J. BANNON
No. 13033
LICENSED PROFESSIONAL ENGINEER
April 22, 2024

Designed:	DJB
Drawn:	JAM
Checked:	BJB
Approved:	BMM
P.E. No:	13033
GEI Project	2203703

GEI Consultants
GEI CONSULTANTS, INC.
5 MILK STREET
PORTLAND, ME 04101
(207)797-8901

UNE
UNIVERSITY OF
NEW ENGLAND

11 HILLS BEACH RD.
BIDDEFORD, MAINE

UNIVERSITY OF NEW ENGLAND MARINE SCIENCE CENTER PIER

11 HILLS BEACH ROAD
BIDDEFORD, YORK COUNTY, MAINE

NO	DATE	ISSUE/REVISION	APP
4	9/14/2023	DEP PERMIT SET	DJB
3	6/28/2023	75% DESIGN SUBMISSION	DJB
2	2/15/2023	30% DESIGN SUBMISSION	DJB
1	12/9/2022	15% DESIGN SUBMISSIONREV	DJB
0	11/11/2022	15% DESIGN SUBMISSION	DJB

SHEET NAME

ACCESS ROAD TYPICAL SECTION

SHEET NO.

C-008

MORICI, ANTHONY \\geiconsultants.com\data\Data_Storage\Working\UNIVERSITY OF NEW ENGLAND\2203703 UNE Marine Science Center Pier\00_CAD\Design\Sheets\2203703-C-008.dwg - 9/15/2023

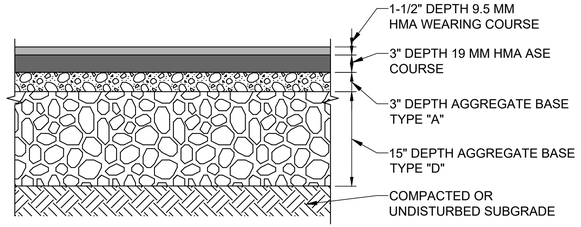

NOTES:
1. PAVEMENT DESIGN SHALL HAVE A MAINEDOT APPROVED JOB MIX FORMULA (JMF) WITHIN THE LATEST CALENDAR YEAR UNLESS OTHERWISE APPROVED BY OWNER.

1 HMA TRAVELWAY/SHOULDER TYPICAL SECTION

NO SCALE

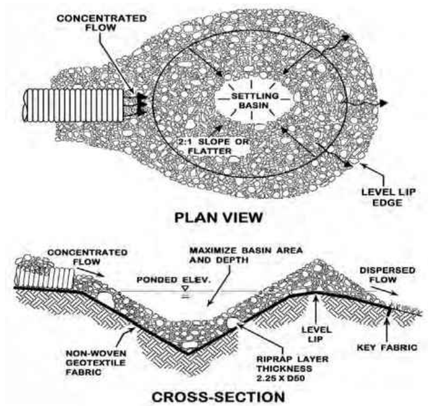

PLUNGE POOL SIZING (minimum)				
SIZE	RIPRAP SIZING (D_{50})	WIDTH At the narrow end of pipe	LENGTH For slow flows (no pressure head)	LENGTH For high flows (with pressure head)
12"	5"	3-4'	4-6'	8-10'
18"	8"	4-6'	6-8'	12-18'
24"	10"	6-8'	8-10'	18-22'
30"	12"	8-10'	12-14'	22-28'
36"	14"	10-12'	14-16'	28-32'

The diameter of the largest stone size in the mix should be about 1.5 times the D_{50} and the smallest one about one half the size. The thickness of riprap should never be less than 2 times the rock D_{50}.

NOTES:
1. IF THE PIPE DISCHARGES ONTO A FLAT AREA, THE APRON SHOULD HAVE A WIDTH THAT IS THREE TIMES THE OUTLET PIPE'S DIAMETER. IF THE PIPE FLOWS HAVE THE POTENTIAL OF CAUSING A GULLY, A LEVEL SPREADER SHOULD BE PROVIDED.
2. THE CHANNEL SIDE SLOPES SHOULD BE NO STEEPER THAN 2:1. RIPRAP ON THE SIDES OF THE PLUNGE POOL SHOULD EXTEND TO THE TOP OF THE CHANNEL.
3. THE PLUNGE POOL SIZING AND THE MEDIAN SIZED RIPRAP CAN BE DETERMINED FROM THE FOLLOWING TABLE. THE THICKNESS OF RIPRAP SHOULD NOT BE LESS THAN 2 TIMES THE ROCK D50.
4. A GEOTEXTILE OR APPROPRIATE GRAVEL FILTER SHOULD BE USED TO PROTECT AGAINST PIPING OF SOIL FINES FROM BENEATH THE ROCK.
5. IN A CHANNEL THAT CAN BE REVEGETATED, SEED AND MULCH SHOULD BE APPLIED WITHIN 7 DAYS FROM FINAL CONSTRUCTION..

2 PLUNGE POOL

NO SCALE

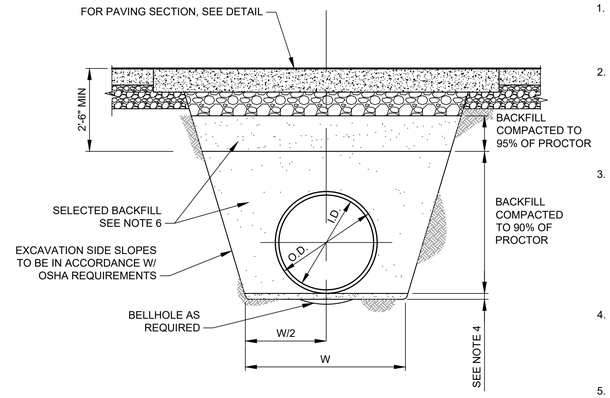

NOTES:
1. TRENCH BOTTOM OR BEDDING FOR ALL PIPE SHALL BE GRADED TO PROVIDE UNIFORM SUPPORT FOR THE ENTIRE LENGTH OF THE PIPE EXCEPT AT BELLHOLES.
2. BELLHOLES FOR PIPES SHALL HAVE A CLEARANCE OF 3" BETWEEN THE BOTTOM OF THE BELLHOLE AND THE EXTERIOR OF THE PIPE BARREL, BUT IN NO CASE SHALL BELLHOLES BE SMALLER THAN REQUIRED TO FACILITATE PLACING OF THE PIPE OR PROPER JOINING OF THE PIPE.
3. COMPACTION BACKFILL SHALL BE COMPACTED TO A DEGREE AT LEAST EQUIVALENT TO THE EXISTING DEGREE OF COMPACTING OF ADJACENT IN-PLACE EARTH MATERIALS AGAINST WHICH SUCH COMPACTED BACKFILL IS TO BE PLACED, OR TO A MIN OF 95% OF THE LABORATORY STANDARD MAX ASTM D698 DENSITY, WHICHEVER IS GREATER.
4. MIN 3" DEEP LAYER OF SCARIFIED MATERIAL WHEN IN HARD MATERIAL. IN UNSUITABLE MATERIAL, OVER EXCAVATE AS DIRECTED BY ENGINEER (6" MIN) AND REPLACE WITH COMPACTED BACKFILL.
5. W = PIPE O.D. + 24" MIN
6. ALL SELECTED BACKFILL IS TO BE IN CONFORMANCE WITH STATE STANDARD SPECIFICATION.

3 TRENCH

NO SCALE



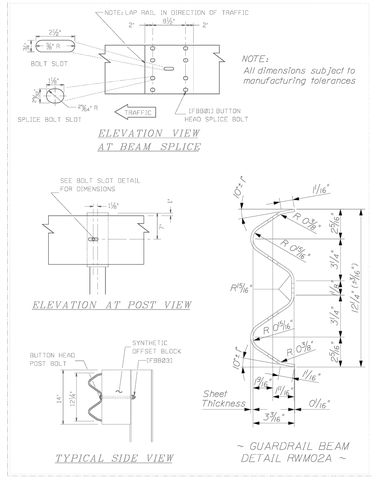

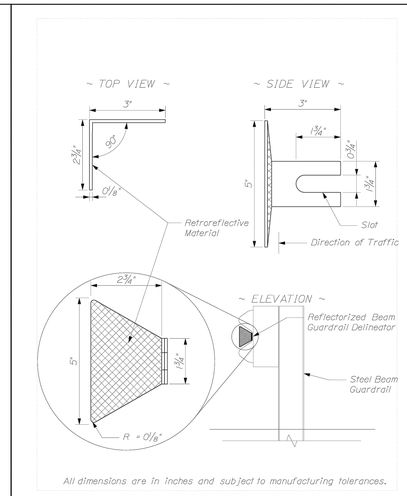

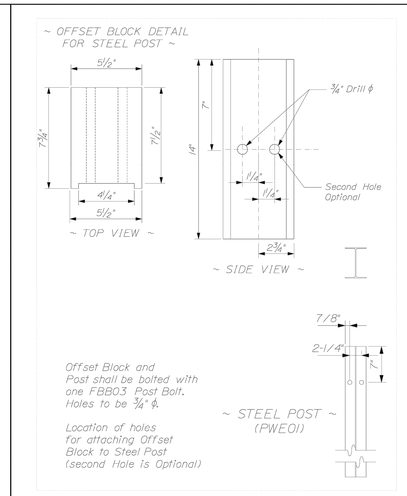

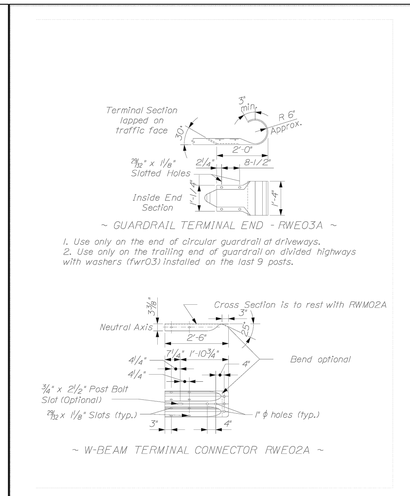

4 GUARD RAIL DETAILS

NO SCALE

FOR PERMIT

Attention:
0 1"
If this scale bar does not measure 1" then drawing is not original scale.

STATE OF MAINE DANIEL J. BANNON No. 13033 REGISTERED PROFESSIONAL ENGINEER
April 22, 2024

Designed:	DJB
Drawn:	JAM
Checked:	BJB
Approved:	BMM
P.E. No:	13033
GEI Project	2203703

GEI Consultants
GEI CONSULTANTS, INC.
5 MILK STREET
PORTLAND, ME 04101
(207)797-8901

UNIVERSITY OF NEW ENGLAND
11 HILLS BEACH RD.
BIDDEFORD, MAINE

UNIVERSITY OF NEW ENGLAND MARINE SCIENCE CENTER PIER
11 HILLS BEACH ROAD
BIDDEFORD, YORK COUNTY, MAINE

NO	DATE	ISSUE/REVISION	APP
4	9/14/2023	DEP PERMIT SET	DJB
3	6/28/2023	75% DESIGN SUBMISSION	DJB
2	2/15/2023	30% DESIGN SUBMISSION	DJB
1	12/9/2022	15% DESIGN SUBMISSIONREV	DJB
0	11/11/2022	15% DESIGN SUBMISSION	DJB

SHEET NAME: **SITE DETAILS**

SHEET NO.: **C-011**

MORICI, ANTHONY \\geiconsultants.com\data\Data_Storage\Working\UNIVERSITY OF NEW ENGLAND\2203703 UNE Marine Science Center Pier\00_CAD\Design\Sheets\2203703-C-DETAILS.dwg - 9/14/2023

EROSION AND SEDIMENTATION CONTROL NOTES:

INTRODUCTION

THE FOLLOWING PLAN FOR CONTROLLING SEDIMENTATION AND EROSION IN THIS PROJECT IS BASED ON CONSERVATION PRACTICES FOUND IN THE MAINE EROSION & SEDIMENT CONTROL BMPS MANUAL, OCTOBER 2016, AND MAINE EROSION AND SEDIMENT CONTROL PRACTICE FIELD GUIDE FOR CONTRACTORS, REVISED 2014, MAINE DEPARTMENT OF ENVIRONMENTAL PROTECTION. THE CONTRACTOR WHO IMPLEMENTS THIS PLAN SHALL BE FAMILIAR WITH THESE PUBLICATIONS AND ADHERE TO THEM AND THE PRACTICES PRESENTED HEREIN REFERENCE IS MADE TO THE EROSION CONTROL PLANS AND DETAILS (C-005 AND C-013) WITHIN THE PLAN SET, SHOWING THE LOCATIONS AND TYPES OF PROPOSED MEASURES TO BE IMPLEMENTED.

GENERAL EROSION AND SEDIMENTATION CONTROL NOTES:

1. EROSION AND SEDIMENTATION CONTROL MEASURES ARE PROPOSED TO CONTROL ACCELERATED EROSION AND SEDIMENTATION AND REDUCE ADVERSE IMPACTS FROM RUNOFF AND EROSION AT THE WORK SITE.
2. APPLICATION OF TEMPORARY AND PERMANENT EROSION CONTROL MEASURES SHALL BE IN ACCORDANCE WITH THE LATEST EDITION OF THE MAINE EROSION AND SEDIMENT CONTROL BMP'S PUBLISHED BY MAINE DEP AND AVAILABLE AT: HTTPS://WWW.MAINE.GOV/DEP/LAND/EROSION/ESCBMPS/
3. THE WORK SHALL BE PERFORMED BY A CONTRACTOR THAT IS CERTIFIED BY MAINE DEP IN EROSION AND SEDIMENT CONTROL MEASURES. A CERTIFIED INDIVIDUAL SHALL BE ONSITE DURING ALL CONSTRUCTION ACTIVITY.
4. EROSION AND SEDIMENTATION DUE TO RUNOFF, TIDAL EXPOSURE, AND WAVE ACTION SHALL BE CONTROLLED BY STAGING CONSTRUCTION ACTIVITY TO MINIMIZE AREA AND TIME OF DISTURBANCE, APPLICATION OF SILT FENCE, BOOMS, BARRIERS, AND OTHER EROSION CONTROL MEASURES, AND PRESERVING NATURAL VEGETATION WHENEVER POSSIBLE.
5. THE CONTRACTOR'S SEQUENCE OF OPERATIONS AND SCHEDULE FOR WORK ACTIVITIES SHALL ACT TO MINIMIZE EXPOSURE TO EROSION.
6. THE CONTRACTOR SHALL INSTALL AND MAINTAIN A SILTATION BOOM AROUND THE PERIMETER OF THE WORK AREA FOR THE NEW PIER FOR THE DURATION OF WORK.
7. THE CONTRACTOR SHALL TAKE CARE TO LIMIT THE AREA OF SOIL DISTURBANCE TO THE MINIMUM NECESSARY TO COMPLETE THE WORK.
8. EROSION CONTROL MEASURES, SEEDING, AND VEGETATION SHALL BE INSPECTED WEEKLY AND AFTER RAINSTORMS, RUNOFF EVENTS, AND STORM EVENTS UNTIL FINAL ACCEPTANCE. REPAIRS SHALL BE MADE WHEN NO LONGER SERVICEABLE DUE TO DAMAGE OR ACCUMULATION OF SEDIMENT.
9. AT THE COMPLETION OF CONSTRUCTION, ALL DISTURBED AREAS SHALL BE RESTORED TO THEIR ORIGINAL CONDITION AND CONTOUR, UNLESS OTHERWISE INDICATED ON THE PLANS.

GENERAL EROSION AND SEDIMENTATION CONTROL PRACTICES

THE FOLLOWING IS A LIST OF GENERAL EROSION CONTROL PRACTICES THAT WILL BE USED TO PREVENT EROSION AND SEDIMENTATION BEFORE, DURING AND AFTER THE CONSTRUCTION OF THIS PROJECT. IN ADDITION, SPECIAL CARE SHALL BE USED AT ALL TIMES TO:

LIMIT DISTURBANCE AND, HENCE, EROSION

1. CORRECT ANY EROSION PROBLEMS IMMEDIATELY.
2. REGULARLY MONITOR THE IMPLEMENTED PRACTICES, ESPECIALLY AFTER EVERY RAINFALL.
3. REVEGETATE DISTURBED AREAS AS SOON AS POSSIBLE AFTER CONSTRUCTION.
4. CONFORM TO ALL REQUIREMENTS/STANDARDS OF THE SITE'S MAINE DEP EROSION & SEDIMENT CONTROL BMP MANUAL.

SILT FENCE AND/OR EROSION CONTROL MIX SEDIMENT BARRIERS

SILT FENCE AND/OR EROSION CONTROL MIX SEDIMENT BARRIERS WILL BE INSTALLED ALONG THE DOWN GRADIENT SIDE OF THE PROPOSED GROUND DISTURBANCE AREAS PRIOR TO ANY CONSTRUCTION ACTIVITIES WHERE SLOPES EXCEED 8% OR THERE IS FLOWING WATER BOTH SILT FENCE AND EROSION CONTROL MATTING BERMS SHALL BE USED.

CATCH BASIN PROTECTION

CATCH BASIN PROTECTION WILL BE INSTALLED AT THE FIRST DOWNGRADIENT CATCH BASIN IN STREET ADJACENT TO ANY CONSTRUCTION ACTIVITIES AND IN ALL ONSITE CATCH BASINS UNTIL SITE HAS BEEN COMPLETELY STABILIZED.

CONSTRUCTION PHASE

THE FOLLOWING GENERAL PRACTICES WILL BE IMPLEMENTED TO PREVENT EROSION DURING CONSTRUCTION ON THIS PROJECT:

1. EROSION AND SEDIMENTATION CONTROL BMPS SHALL BE INTALLED PRIOR TO THE COMMENCEMENT OF EARTHWORK ACTIVITIES.
2. ONLY THOSE AREAS UNDER ACTIVE CONSTRUCTION WILL BE CLEARED AND LEFT IN AN UNTREATED OR UNVEGETATED CONDITION. AN AREA NO LARGER THAN WHAT CAN BE MULCHED IN ONE DAY MAY BE OPEN AT ONCE. ONCE CONSTRUCTION OF AN AREA IS COMPLETE, FINAL GRADING, LOAMING AND SEEDING SHALL OCCUR IMMEDIATELY (REFER TO "POST CONSTRUCTION REVEGETATION" SECTION). IF DURING FINAL GRADING, LOAMING AND SEEDING CAN NOT OCCUR IMMEDIATELY, IT SHALL BE DONE PRIOR TO ANY STORM EVENT AND WITHIN 15 DAYS OF COMPLETING CONSTRUCTION IN THE AREA. IF FINAL GRADING, LOAMING AND SEEDING CANNOT OCCUR WITHIN 7 DAYS, OR IF THE AREA IS NOT UNDER ACTIVE CONSTRUCTION FOR A PERIOD LONGER THAN 7 DAYS, SEE ITEM NO. 4 BELOW.
3. PRIOR TO THE START OF CONSTRUCTION IN A SPECIFIC AREA, SILT FENCING SHALL BE INSTALLED ON DOWNGRADIENT PORTIONS OF THE SITE AS LOCATED ON THE PLANS TO PROTECT AGAINST ANY CONSTRUCTION RELATED EROSION.
4. TOPSOIL WILL BE STOCKPILED WHEN NECESSARY IN AREAS WHICH HAVE MINIMUM POTENTIAL FOR EROSION AND WILL BE KEPT AS FAR AS POSSIBLE FROM EXISTING DRAINAGE AREAS AND WETLANDS. ALL STOCKPILES EXPECTED TO REMAIN LONGER THAN 7 DAYS SHALL BE:
   A. TREATED WITH ANCHORED MULCH (WITHIN 5 DAYS OF THE LAST DEPOSIT OF STOCKPILED SOIL).
   B. SEEDED WITH CONSERVATION MIX AND MULCHED IMMEDIATELY.
   C. STOCKPILES SHALL BE EITHER PLACED UPHILL OF AN EXISTING SEDIMENT BARRIER ON THE SITE OR ENCIRCLED BY A HAY BALE OR SILT FENCE BARRIER THE FIRST DAY THAT STOCKPILING COMMENCES.
5. ALL DISTURBED AREAS EXPECTED TO REMAIN LONGER THAN 7 DAYS SHALL BE:
   A. TREATED WITH STRAW AT A RATE OF 70-90 LBS. PER 1000 SQUARE FEET FROM 4/16 TO 10/1, OR AT A RATE OF 150-200 LBS. PER 1000 SQUARE FEET FROM 10/1 TO 4/15.
   B. SEEDED WITH CONSERVATION MIX OF PERENNIAL RYE GRASS (1.0 LBS/1000 SQ.FT.) AND MULCHED IMMEDIATELY. FROM 10/1 TO 4/15, FOLLOW THE SEEDING RATES AS OUTLINED BELOW IN SUB-SECTION 4.D. OF THE "POST CONSTRUCTION REVEGETATION" SECTION.
   C. MONITORED EVERY TWO WEEKS UNTIL SEEDING CAN OCCUR AND REMULCHED AS NEEDED TO PROTECT SLOPES.
6. ALL GRADING WILL BE HELD TO A MAXIMUM 3:1 SLOPE WHERE PRACTICAL. GREATER SLOPES MAY BE USED WHERE THE BANKS ARE PROTECTED WITH SOFT ARMOUR MATTING, EROSION CONTROL MATTING, OR RIPRAP. ALL SLOPES WILL BE STABILIZED WITH PERMANENT SEEDING IMMEDIATELY AFTER FINAL GRADING IS COMPLETE. (IT IS UNDERSTOOD THAT IMMEDIATELY MEANS WITHIN 5 DAYS OF THE COMPLETION OF WORK. SEE POST-CONSTRUCTION REVEGETATION FOR SEEDING SPECIFICATION).
7. APPLICATION RATE MUST BE 2 BALES (70-90 LBS.) PER 1,000 SQUARE FEET OR 1.5 TO 2 TONS (90-100 BALES) PER ACRE TO COVER 75 TO 90% OF THE GROUND SURFACE. DRIVE OVER WITH TRACKED CONSTRUCTION EQUIPMENT ON GRADES OF 5% AND LESS.
8. CONSTRUCTION TRAFFIC WILL BE DIRECTED OVER THE EXISTING SITE ENTRANCE. THE ROAD SHALL BE SWEPT AND VACUUMED DAILY SHOULD SEDIMENT BE TRACKED ONTO IT.
9. ALL AREAS DRAINING TO A STORMWATER FILTER OR BMP SHALL BE STABILIZED PRIOR TO CONSTRUCTION OF FILTER MEDIA TO PREVENT SEDIMENT FROM CLOGGING MEDIA.

DEWATERING

1. ALL DEWATERING DISCHARGE LOCATIONS SHALL BE LOCATED ON RELATIVELY FLAT GROUND AT LEAST 75' FROM STREAMS AND 25' FROM WETLANDS. THE CONTRACTOR SHALL UTILIZE DIRTBAGS, EROSION CONTROL MIX BERMS, OR SIMILAR METHODS FOR FILTRATION OF DEWATERING AND SHALL CONFORM TO THE MAINE EROSION AND SEDIMENT CONTROL BMPS G-1, G-2, AND G-3.

POST CONSTRUCTION REVEGETATION

THE FOLLOWING GENERAL PRACTICES WILL BE IMPLEMENTED TO PREVENT EROSION AS SOON AS AN AREA IS READY TO UNDERGO FINAL GRADING:

1. A MINIMUM OF 6" OF LOAM WILL BE SPREAD OVER DISTURBED AREAS AND GRADED TO A UNIFORM DEPTH AND NATURAL APPEARANCE.
2. LAWN AREAS: "PARK MIX" GRASS SEED BY ALLEN, STERLING & LOTHROP (FALMOUTH, MAINE), OR APPROVED EQUAL.
3. MULCH SHALL BE HAY OR STRAW MULCHES THAT ARE DRY AND FREE FROM UNDESIRABLE SEEDS AND COURSE MATERIALS.
   A. APPLICATION RATE MUST BE 2 BALES (70-90 LBS.) PER 1,000 SQUARE FEET OR 1.5 TO 2 TONS (90-100 BALES) PER ACRE TO COVER 75 TO 90% OF THE GROUND SURFACE.
   B. DRIVE OVER WITH TRACKED CONSTRUCTION EQUIPMENT ON GRADES OF 5% AND LESS.
   C. BLANKET WITH TACKED PHOTODEGRADABLE/BIODEGRADABLE NETTING ON GRADES GREATER THAN 5%.
4. HYDRO-MULCH SHALL CONSIST OF A MIXTURE OF ASPHALT, WOOD FIBRE OR PAPER FIBRE AND WATER, WHICH IS SPRAYED OVER A SEEDED AREA. HYDRO-MULCH SHALL NOT BE USED BETWEEN 10/1 AND 4/15.
5. CONSTRUCTION SHALL BE PLANNED TO ELIMINATE THE NEED FOR SEEDING BETWEEN OCTOBER 1ST AND APRIL 15TH. SHOULD SEEDING BE NECESSARY BETWEEN THESE DATES, THE FOLLOWING PROCEDURE SHALL BE FOLLOWED:
   A. ONLY UNFROZEN LOAM SHALL BE USED.
   B. LOAMING, SEEDING AND MULCHING WILL NOT BE DONE OVER SNOW OR ICE COVER. IF SNOW EXISTS, IT MUST BE REMOVED PRIOR TO PLACEMENT OF SEED.
   C. WHERE PERMANENT SEEDING IS NECESSARY, ANNUAL WINTER RYE (1.2 LBS/1000 S.F.) SHALL BE SOWN INSTEAD OF THE PREVIOUSLY NOTED SEEDING RATE.
   D. WHERE TEMPORARY SEEDING IS REQUIRED, ANNUAL WINTER RYE (2.5 LBS/1000 S.F.) SHALL BE SOWN INSTEAD OF THE PREVIOUSLY NOTED SEEDING RATE.
   E. FERTILIZING, SEEDING AND MULCHING SHALL BE DONE ON LOAM THE DAY THE LOAM IS SPREAD.
   F. HAY MULCH SHALL BE SECURED WITH PHOTODEGRADABLE/BIODEGRADABLE NETTING. TRACKING BY MACHINERY ALONE WILL NOT SUFFICE. WINTER MULCHING RATES, SHALL BE DOUBLE AS SPECIFIED ABOVE IN SUBSECTION 3.A OF THE "POST CONSTRUCTION REVEGETATION" SECTION, SHOULD BE APPLIED DURING THIS PERIOD.
6. FOLLOWING FINAL SEEDING, THE SITE WILL BE INSPECTED EVERY 30 DAYS UNTIL 90% COVER HAS BEEN ESTABLISHED. RESEEDING WILL BE CARRIED OUT BY THE CONTRACTOR WITHIN 10 DAYS OF NOTIFICATION BY THE DESIGN PROFESSIONAL THAT THE EXISTING CATCH IS INADEQUATE.

MONITORING SCHEDULE

THE CONTRACTOR SHALL BE RESPONSIBLE FOR INSTALLING, MONITORING, MAINTAINING, REPAIRING, REPLACING AND REMOVING ALL OF THE EROSION AND SEDIMENTATION CONTROLS OR APPOINTING A QUALIFIED SUBCONTRACTOR TO DO SO. MAINTENANCE MEASURES WILL BE APPLIED AS NEEDED DURING THE ENTIRE CONSTRUCTION CYCLE. IMMEDIATELY FOLLOWING ANY SIGNIFICANT RAINFALL, AND AT LEAST ONCE A WEEK, A VISUAL INSPECTION WILL BE MADE OF ALL EROSION AND SEDIMENTATION CONTROLS AS FOLLOWS:

1. SILT FENCE SHALL BE INSPECTED AND REPAIRED. SEDIMENT TRAPPED BEHIND THESE BARRIERS SHALL BE EXCAVATED WHEN IT REACHES A DEPTH OF 6" AND REDISTRIBUTED TO AREAS UNDERGOING FINAL GRADING.
2. CONSTRUCTION ENTRANCE SHALL BE VISUALLY INSPECTED AND REPAIRED AS NEEDED. ANY AREAS SUBJECT TO RUTTING SHALL BE STABILIZED IMMEDIATELY. IF THE VOIDS OF THE CONSTRUCTION ENTRANCE BECOME FILLED WITH MUD, MORE CRUSHED STONE SHALL BE ADDED AS NEEDED. THE PUBLIC ROADWAY SHALL BE SWEPT AND VACUUMED SHOULD MUD BE DEPOSITED/TRACKED ONTO THEM.

STANDARDS FOR STABILIZING SITES FOR THE WINTER

THE FOLLOWING STANDARDS AND METHODOLOGIES SHALL BE USED FOR STABILIZING THE SITE DURING THE WINTER CONSTRUCTION PERIOD:

1. STANDARD FOR THE TIMELY STABILIZATION OF DISTURBED SLOPES (ANY AREA HAVING A GRADE GREATER THAN 25%) - THE CONTRACTOR WILL SEED AND MULCH ALL SLOPES TO BE VEGETATED BY SEPTEMBER 15TH. IF THE CONTRACTOR FAILS TO STABILIZE ANY SLOPE TO BE VEGETATED BY SEPTEMBER 15TH, THEN THE CONTRACTOR WILL TAKE ONE OF THE FOLLOWING ACTIONS TO STABILIZE THE SLOPE FOR LATE FALL AND WINTER.
   A. STABILIZE THE SOIL WITH TEMPORARY VEGETATION AND EROSION CONTROL MATS: BY OCTOBER 1ST THE CONTRACTOR WILL SEED THE DISTURBED SLOPE WITH WINTER RYE AT A RATE OF 3 POUNDS PER 1000 SQUARE FEET AND THEN INSTALL EROSION CONTROL MATS OR ANCHORED HAY MULCH OVER THE SEEDING AT TWICE THE RATE AS SPECIFIED ABOVE IN SUBSECTION 3.A OF THE "POST CONSTRUCTION REVEGETATION" SECTION. THE CONTRACTOR WILL MONITOR GROWTH OF THE RYE OVER THE NEXT 30 DAYS.
   B. STABILIZE THE SLOPE WITH WOOD-WASTE COMPOST: THE CONTRACTOR WILL PLACE A SIX-INCH LAYER OF WOOD-WASTE COMPOST ON THE SLOPE BY NOVEMBER 15TH. THE CONTRACTOR WILL NOT USE WOOD-WASTE COMPOST TO STABILIZE SLOPES HAVING GRADES GREATER THAN 50% (2H:IV) OR HAVING GROUNDWATER SEEPS ON THE SLOPE FACE.
   C. STABILIZE THE SLOPE WITH STONE RIPRAP: THE CONTRACTOR WILL PLACE A LAYER OF STONE RIPRAP ON THE SLOPE BY NOVEMBER 15TH. THE DEVELOPMENT'S OWNER WILL HIRE A REGISTERED PROFESSIONAL ENGINEER TO DETERMINE THE STONE SIZE NEEDED FOR STABILITY ON THE SLOPE AND TO DESIGN A FILTER LAYER FOR UNDERNEATH THE RIPRAP.

STANDARD FOR THE TIMELY STABILIZATION OF DISTURBED SOILS - BY SEPTEMBER 15TH THE CONTRACTOR WILL SEED AND MULCH ALL DISTURBED SOILS ON THE SITE. IF THE CONTRACTOR FAILS TO STABILIZE THESE SOILS BY THIS DATE, THEN THE CONTRACTOR WILL TAKE ON OF THE FOLLOWING ACTIONS TO STABILIZE THE SOIL FOR LATE FALL AND WINTER.

   A. STABILIZE THE SOIL WITH TEMPORARY VEGETATION: BY OCTOBER 1ST THE CONTRACTOR WILL SEED THE DISTURBED SOIL WITH WINTER RYE AT A SEEDING RATE OF 3 POUNDS PER 1000 SQUARE FEET, LIGHTLY MULCH THE SEEDED SOIL WITH HAY OR STRAW AT 75 POUNDS PER 1000 SQUARE FEET, AND ANCHOR THE MULCH WITH PLASTIC NETTING. THE CONTRACTOR WILL MONITOR GROWTH OF THE RYE OVER THE NEXT 30 DAYS. IF THE RYE FAILS TO GROW AT LEAST THREE INCHES OR FAILS TO COVER AT LEAST 75% OF THE DISTURBED SOIL BEFORE NOVEMBER, 1, THEN THE CONTRACTOR WILL MULCH THE AREA FOR OVER-WINTER PROTECTION AS DESCRIBED IN ITEM III OF THIS STANDARD.
   B. STABILIZE THE SOIL WITH SOD: THE CONTRACTOR WILL STABILIZE THE DISTURBED SOIL WITH PROPERLY INSTALLED SOD BY OCTOBER 1ST. PROPER INSTALLATION INCLUDES THE CONTRACTOR PINNING THE SOD ONTO THE SOIL WITH WIRE PINS, ROLLING THE SOD TO GUARANTEE CONTACT BETWEEN THE SOD AND UNDERLYING SOIL, AND WATERING THE SOD TO PROMOTE ROOT GROWTH INTO THE DISTURBED SOIL.
   C. STABILIZE THE SOIL WITH MULCH: BY NOVEMBER 15TH THE CONTRACTOR WILL MULCH THE DISTURBED SOIL BY SPREADING HAY OR STRAW AT A RATE OF AT LEAST 150 POUNDS PER 1000 SQUARE FEET ON THE AREA SO THAT NO SOIL IS VISIBLE THROUGH THE MULCH. IMMEDIATELY AFTER APPLYING THE MULCH, THE CONTRACTOR WILL ANCHOR THE MULCH WITH NETTING OR OTHER METHOD TO PREVENT WIND FROM MOVING THE MULCH OFF THE DISTURBED SOIL.

EROSION CONTROL REMOVAL

AN AREA IS CONSIDERED STABLE IF IT IS PAVED OR IF 90% GROWTH OF PLANTED SEEDS IS ESTABLISHED. ONCE AN AREA IS CONSIDERED STABLE, THE EROSION CONTROL MEASURES CAN BE REMOVED AS FOLLOWS:

1. SILT FENCE: SILT FENCE SHALL BE DISPOSED OF LEGALLY AND PROPERLY OFF-SITE. ALL SEDIMENT TRAPPED BEHIND THESE CONTROLS SHALL BE DISTRIBUTED TO AN AREA UNDERGOING FINAL GRADING OR REMOVED AND RELOCATED OFF-SITE.
2. STABILIZED CONSTRUCTION ENTRANCE: THE STABILIZED CONSTRUCTION ENTRANCE SHALL BE REMOVED ONCE THE COMPACTED ROADWAY BASE IN IN PLACE. STONE AND SEDIMENT FROM THE CONSTRUCTION ENTRANCE SHALL BE REDISTRIBUTED TO AN AREA UNDERGOING GRADING OR REMOVED AND RELOCATED OFFSITE.
3. MISCELLANEOUS: ONCE ALL THE TRAPPED SEDIMENTS HAVE BEEN REMOVED FROM THE TEMPORARY SEDIMENTATION DEVICES THE DISTURBED AREAS MUST BE REGRADED IN AN AESTHETIC MANNER TO CONFORM TO THE SURROUNDING TOPOGRAPHY. ONCE GRADED THESE DISTURBED AREAS MUST BE LOAMED (IF NECESSARY), FERTILIZED, SEEDED AND MULCHED IN ACCORDANCE WITH THE RATES PREVIOUSLY STATED.

THE ABOVE EROSION CONTROLS MUST BE REMOVED WITHIN 30 DAYS OF FINAL STABILIZATION OF THE SITE. CONFORMANCE WITH THIS PLAN AND FOLLOWING THESE PRACTICES WILL RESULT IN A PROJECT THAT COMPLIES WITH THE STATE REGULATIONS AND THE STANDARDS OF THE NATURAL RESOURCES PROTECTION ACT, AND WILL PROTECT WATER QUALITY IN AREAS DOWNSTREAM ROM THE PROJECT.

MAINE CONSTRUCTION GENERAL PERMIT REQUIRED

SUBMISSION OF A MAINE CONSTRUCTION GENERAL PERMIT (MCGP) IS REQUIRED PRIOR TO COMMENCEMENT OF ANY EXCAVATION ACTIVITIES.

INSPECTION AND MAINTENANCE (APPENDIX B)

1. INSPECTION AND MAINTENANCE REQUIREMENTS: INSPECT DISTURBED AND IMPERVIOUS AREAS, EROSION AND STORMWATER CONTROL MEASURES, AREAS USED FOR STORAGE THAT ARE EXPOSED TO PRECIPITATION, AND LOCATIONS WHERE VEHICLES ENTER OR EXIT THE SITE. INSPECT THESE AREAS AT LEAST ONCE A WEEK AS WELL AS BEFORE AND AFTER A SIGNIFICANT STORM EVENT (0.5 INCHES OF RAINFALL IN A 24-HOUR PERIOD) AND PRIOR TO COMPLETION OF PERMANENT STABILIZATION MEASURES. A PERSON WITH KNOWLEDGE OF EROSION AND STORMWATER CONTROL, INCLUDING THE STANDARDS IN THE MCGP AND ANY DEPARTMENTAL COMPANION DOCUMENT TO THE MCGP, MUST CONDUCT THE INSPECTION. THIS PERSON MUST BE IDENTIFIED IN THE INSPECTION LOG. IF BEST MANAGEMENT PRACTICES (BMPS) NEED TO BE MODIFIED OR IF ADDITIONAL BMPS ARE NECESSARY, IMPLEMENTATION MUST BE STARTED BY THE END OF THE NEXT WORKIN DAY AND COMPLETED WITHIN 7 CALENDAR DAYS AND PRIOR TO ANY STORM EVENT (RAINFALL). ALL MEASURES MUST BE MAINTAINED IN EFFECTIVE OPERATING CONDITION UNTIL AREAS AREA PERMANENTLY STABILIZED. DOCUMENTATION OF CORRECTION ACTIONS SHALL BE MAINTAINED WITH THE INSPECTION FORMS.
2. INSPECTION LOG (REPORT): A LOG (REPORT) MUST BE KEPT SUMMARIZING THE SCOPE OF THE INSPECTION, NAME(S) AND QUALIFICATIONS OF THE PERSONNEL MAKING THE INSPECTION, THE DATE(S) OF THE INSPECTION, AND MAJOR OBSERVATIONS RELATING TO OPERATION OF EROSION AND SEDIMENTATION CONTROLS AND POLLUTION PREVENTION MEASURES. MAJOR OBSERVATIONS MUST INCLUDE BMPS THAT NEED MAINTENANCE, BMPS THAT FAILED TO OPERATE AS DESIGNED OR PROVED INADEQUATE FOR A PARTICULAR LOCATION, AND LOCATIONS(S) WHERE ADDITIONAL BMPS ARE NEEDED. FOR EACH BMP REQUIRING MAINTENANCE, BMP NEEDING REPLACEMENT, AND LOCATION NEEDING ADDITIONAL BMPS, NOTE IN THE INSPECTION LOG THE CORRECT ACTION TAKEN AND WHEN IT WAS TAKEN. THE LOG MUST BE MADE ACCESSIBLE TO THE DEPARTMENT STAFF AND A COPY MUST BE PROVIDED UPON REQUEST. THE PERMITTEE SHALL RETAIN A COPY OF THE LOG FOR A PERIOD OF AT LEAST THREE YEARS FROM THE COMPLETION OF THE PERMANENT STABILIZATION.

HOUSEKEEPING (APPENDIX C)

1. SPILL PREVENTION: CONTROLS MUST BE USED TO PREVENT POLLUTANTS FROM CONSTRUCTION AND WASTE MATERIALS STORED ON SITE TO ENTER STORMWATER, WHICH INCLUDES STORAGE PRACTICES TO MINIMIZE EXPOSURE OF THE MATERIALS TO STORMWATER. THE SITE CONTRACTOR OR OPERATOR MUST DEVELOP, AND IMPLEMENT AS NECESSARY, APPROPRIATE SPILL PREVENTION, CONTAINMENT, AND RESPONSE PLANNING MEASURES.

NOTE: ANY SPILL OR RELEASE OF TOXIC OR HAZARDOUS SUBSTANCES MUST BE REPORTED TO THE DEPARTMENT. FOR OIL SPILLS, CALL 1-800-482-0777 WHICH IS AVAILABLE 24 HOURS A DAY. FOR SPILLS OF TOXIC OR HAZARDOUS MATERIAL, CALL 1-800-452-4664 WHICH IS AVAILABLE 24 HOURS A DAY. FOR MORE INFORMATION, VISIT THE DEPARTMENT'S WEBSITE AT: HTTP://WWW.MAINE.GOV/DEP/SPILLS/EMERGSPILLRESP/

2. GROUNDWATER PROTECTION: DURING CONSTRUCTION, LIQUID PETROLEUM PRODUCTS AND OTHER HAZARDOUS MATERIALS WITH THE POTENTIAL TO CONTAMINATE GROUNDWATER MAY NOT BE STORED OR HANDLED IN AREAS OF THE SITE DRAINING TO AN INFILTRATION AREA. AN "INFILTRATION AREA" IS ANY AREA OF THE SITE THAT BY DESIGN OR AS A RESULT OF SOILS, TOPOGRAPHY AND OTHER RELEVANT FACTORS ACCUMULATES RUNOFF THAT INFILTRATES INTO THE SOIL. DIKES, BERMS, SUMPS, AND OTHER FORMS OF SECONDARY CONTAINMENT THAT PREVENT DISCHARGE TO GROUNDWATER MAY BE USED TO ISOLATE PORTIONS OF THE SITE FOR THE PURPOSES OF STORAGE AND HANDLING OF THESE MATERIALS. ANY PROJECT PROPOSING INFILTRATION OF STORMWATER MUST PROVIDE ADEQUATE PRE-TREATMENT OF STORMWATER PRIOR TO DISCHARGE OF STORMWATER TO THE INFILTRATION AREA, OR PROVIDE FOR TREATMENT WITHIN THE INFILTRATION AREA, IN ORDER TO PREVENT THE ACCUMULATION OF FINES, REDUCTION IN INFILTRATION RATE, AND CONSEQUENT FLOODING AND DESTABILIZATION.

NOTE: LACK OF APPROPRIATE POLLUTANT REMOVAL BEST MANAGEMENT PRACTICES (BMPS) MAY RESULT IN VIOLATIONS OF THE GROUNDWATER QUALITY STANDARD ESTABLISHED BY 38 M.R.S.A. §465-C(1).

3. FUGITIVE SEDIMENT AND DUST: ACTIONS MUST BE TAKEN TO ENSURE THAT ACTIVITIES DO NOT RESULT IN NOTICEABLE EROSION OF SOILS OR FUGITIVE DUST EMISSIONS DURING OR AFTER CONSTRUCTION. OIL MAY NOT BE USED FOR DUST CONTROL, BUT OTHER WATER ADDITIVES MAY BE CONSIDERED AS NEEDED. A STABILIZED CONSTRUCTION ENTRANCE (SCE) SHOULD BE INCLUDED TO MINIMIZE TRACKING OF MUD AND SEDIMENT. IF OFF-SITE TRACKING OCCURS, PUBLIC ROADS SHOULD BE SWEPT IMMEDIATELY AND NO LESS THAN ONCE A WEEK AND PRIOR TO SIGNIFICANT STORM EVENTS. OPERATIONS DURING DRY MONTHS, THAT EXPERIENCE FUGITIVE DUST PROBLEMS, SHOULD WET DOWN UNPAVED ACCESS ROADS ONCE A WEEK OR MORE FREQUENTLY AS NEEDED WITH A WATER ADDITIVE TO SUPPRESS FUGITIVE SEDIMENT AND DUST.

NOTE: DEWATERING A STREAM WITHOUT A PERMIT FROM THE DEPARTMENT MAY VIOLATE STATE WATER QUALITY STANDARDS AND THE NATURAL RESOURCES PROTECTION ACT.

4. DEBRIS AND OTHER MATERIALS: MINIMIZE THE EXPOSURE OF CONSTRUCTION DEBRIS, BUILDING AND LANDSCAPING MATERIALS, TRASH, FERTILIZERS, PESTICIDES, HERBICIDES, DETERGENTS, SANITARY WASTE AND OTHER MATERIALS TO PRECIPITATION AND STORMWATER RUNOFF. THESE MATERIALS MUST BE PREVENTED FROM BECOMING A POLLUTANT SOURCE.

NOTE: TO PREVENT THESE MATERIALS FROM BECOMING A SOURCE OF POLLUTANTS, CONSTRUCTION AND POST-CONSTRUCTION ACTIVITIES RELATED TO A PROJECT MAY BE REQUIRED TO COMPLY WITH APPLICABLE PROVISION OF RULES RELATED TO SOLID, UNIVERSAL, AND HAZARDOUS WASTE, INCLUDING, BUT NOT LIMITED TO, THE MAINE SOLID WASTE AND HAZARDOUS WASTE MANAGEMENT RULES; MAINE HAZARDOUS WASTE MANAGEMENT RULES; MAINE OIL CONVEYANCE AND STORAGE RULES; AND MAINE PESTICIDE REQUIREMENTS.

5. EXCAVATION DEWATERING: EXCAVATION DEWATERING IS THE REMOVAL OF WATER FROM TRENCHES, FOUNDATIONS, COFFER DAMS, PONDS, AND OTHER AREAS WITHIN THE CONSTRUCTION AREA THAT RETAIN WATER AFTER EXCAVATION. IN MOST CASES THE COLLECTED WATER IS HEAVILY SILTED AND HINDERS CORRECT AND SAFE CONSTRUCTION PRACTICES. THE COLLECTED WATER REMOVED FROM THE PONDED AREA, EITHER THROUGH GRAVITY OR PUMPING, MUST BE SPREAD THROUGH NATURAL WOODED BUFFERS OR REMOVED TO AREAS THAT ARE SPECIFICALLY DESIGNED TO COLLECT THE MAXIMUM AMOUNT OF SEDIMENT POSSIBLE, LIKE A COFFERDAM SEDIMENTATION BASIN. AVOID ALLOWING THE WATER TO FLOW OVER DISTURBED AREAS OF THE SITE. EQUIVALENT MEASURES MAY BE TAKEN IF APPROVED BY THE DEPARTMENT.

NOTE: DEWATERING CONTROLS ARE DISCUSSED IN THE "MAINE EROSION AND SEDIMENT CONTROL BMPS, MAINE DEPARTMENT OF ENVIRONMENTAL PROTECTION."

6. AUTHORIZED NON-STORMWATER DISCHARGES: IDENTIFY AND PREVENT CONTAMINATION BY NON-STORMWATER DISCHARGES. WHERE ALLOWED NON-STORMWATER DISCHARGES EXIST, THEY MUST BE IDENTIFIED AND STEPS SHOULD BE TAKEN TO ENSURE THE IMPLEMENTATION OF APPROPRIATE POLLUTION PREVENTION MEASURES FOR THE NON-STORMWATER COMPONENT(S) OF THE DISCHARGE. AUTHORIZED NON-STORMWATER DISCHARGES ARE:.
   - DISCHARGES FROM FIREFIGHTING ACTIVITY;
   - FIRE HYDRANT FLUSHINGS;
   - VEHICLE WASHWATER IF DETERGENTS ARE NOT USED AND WASHING IS LIMITED TO THE EXTERIOR OF VEHICLES (ENGINE, UNDERCARRIAGE, AND TRANSMISSION WASHING IS PROHIBITED);
   - DUST CONTROL RUNOFF IN ACCORDANCE WITH PERMIT CONDITIONS AND APPENDIX (C)(3);
   - ROUTINE EXTERNAL BUILDING WASHDOWN, NOT INCLUDING SURFACE PAINT REMOVAL, THAT DOES NOT INVOLVE DETERGENTS;
   - PAVEMENT WASHWATER (WHERE SPILLS/LEAKS OF TOXIC OR HAZARDOUS MATERIALS HAVE NOT OCCURRED, UNLESS ALL SPILLED MATERIAL HAD BEEN REMOVED) IF DETERGENTS ARE NOT USED;
   - UNCONTAMINATED AIR CONDITIONING OR COMPRESSOR CONDENSATE;
   - UNCONTAMINATED GROUNDWATER OR SPRING WATER;
   - FOUNDATION OR FOOTER DRAIN-WATER WHERE FLOWS ARE NOT CONTAMINATED;
   - UNCONTAMINATED EXCAVATION DEWATERING (SEE REQUIREMENTS IN APPENDIX C(5));
   - POTABLE WATER SOURCES INCLUDING WATERLINE FLUSHINGS; AND
   - LANDSCAPE IRRIGATION
7. UNAUTHORIZED NON-STORMWATER DISCHARGES: THE DEPARTMENT'S APPROVAL UNDER THIS CHAPTER DOES NOT AUTHORIZE A DISCHARGE THAT IS MIXED WITH A SOURCE OF NON-STORMWATER, OTHER THAN THOSE DISCHARGES IN COMPLIANCE WITH APPENDIX C (6). SPECIFICALLY, THE DEPARTMENT'S APPROVAL DOES NOT AUTHORIZE DISCHARGES OF THE FOLLOWING:
   - WASTEWATER FROM THE WASHOUT OR CLEANOUT OF CONCRETE, STUCCO, PAINT, FORM RELEASE OILS, CURING COMPOUNDS OR OTHER CONSTRUCTION MATERIALS;
   - FUELS, OILS OR OTHER POLLUTANTS USED IN VEHICLE AND EQUIPMENT OPERATION AND MAINTENANCE;
   - SOAPS, SOLVENTS, OR DETERGENTS USED IN VEHICLE AND EQUIPMENT WASHING; AND
   - TOXIC OR HAZARDOUS SUBSTANCES FROM A SPILL OR OTHER RELEASE.

ADDITIONAL REQUIREMENTS: ADDITIONAL REQUIREMENTS MAY BE APPLIED ON A SITE-SPECIFIC BASIS.

CONSTRUCTION OVERSITE

THE APPLICANT WILL RETAIN THE SERVICES OF A PROFESSIONAL ENGINEER TO INSPECT THE CONSTRUCTION AND STABILIZATION FOR ALL STORMWATER MANAGEMENT STRUCTURES. IF NECESSARY, THE INSPECTING ENGINEER WILL INTERPRET THE POND'S CONSTRUCTION PLAN FOR THE CONTRACTOR. ONCE

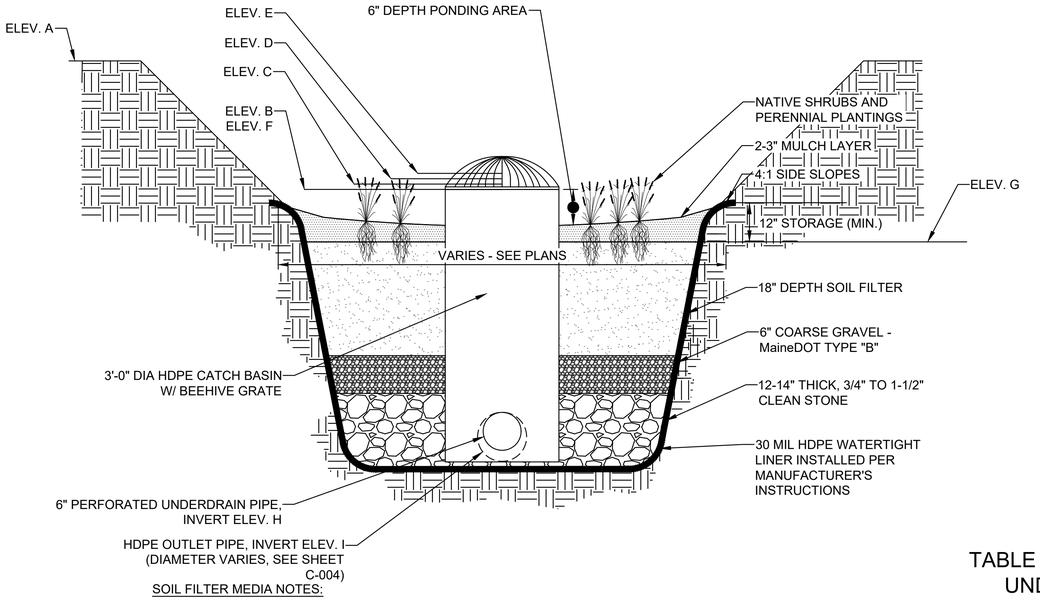

SOIL FILTER MEDIA NOTES:

SOIL FILTER MEDIA SHALL CONFORM TO MAINE DEP SOIL FILTER MEDIA OPTION 1, PER MAINE DEP STORMWATER BMP MANUAL CHAPTER 7.1. AS FOLLOWS:

1.1. SOIL FILTER MEDIA SHALL CONSIST OF A SILTY SAND SOIL OR SOIL MIXTURE COMBINED WITH A MATURE, MODERATELY FINE SHREDDED BARK OR WOOD FIBER MULCH.
1.2. THE RESULTING MIX SHALL CONTAIN NO LESS THAN 10% BY DRY WEIGHT ORGANIC MATERIAL.
1.3. THE RESULTING MIX SHALL CONTAIN 8% TO 12% PASSING THE NO. 200 SIEVE.
1.4. THE RESULTING MIX SHALL CONTAIN A MAXIMUM CLAY CONTENT OF 2%.

UNDERDRAIN OUTLET VALVE CALIBRATION NOTES:

AFTER THE COMPLETION OF INSTALLATION OF THE SOIL FILTER MEDIA, THE CONTRACTOR SHALL PERFORM THE FOLLOWING PROCEDURE TO CALIBRATE THE UNDERDRAIN OUTLET VALVE TO ACHIEVE THE 0.75"/HOUR DESIGN FLOW RATE.

1. BEGIN WITH VALVE HALF-OPEN.
2. CAREFULLY FLOOD THE BASIN UNTIL THERE IS 18" OF WATER STORED ABOVE THE SOIL FILTER MEDIA (UP TO THE HEIGHT OF OUTLET STRUCTURE RIM) WITHOUT CAUSING EROSION OF THE SOIL FILTER MEDIA.
3. RECORD THE TIME IT TAKES FOR THE 18" OF WATER TO DRAIN TO THE TOP OF THE SOIL FILTER MEDIA. THE TARGET DRAINDOWN TIME IS 24 HOURS.
4. IF THE 18" OF WATER DRAINS IN LESS THAN 24 HOURS, CLOSE THE VALVE SLIGHTLY AND REPEAT STEPS 2 & 3 ABOVE.
5. IF THE 18" OF WATER DRAINS IN MORE THAN 24 HOURS, OPEN THE VALVE SLIGHTLY AND REPEAT STEPS 2 & 3 ABOVE.
6. REPEAT THIS PROCESS UNTIL THE 18" OF WATER DRAINS IN 24 HOURS.

TABLE 1: MDOT SPECIFICATIONS FOR UNDERDRAINS (MDOT #703.22)

SIEVE SIZE	% BY WEIGHT
UNDERDRAIN TYPE B	
0'-1"	90-100
0'-0 1/2"	75-100
#4	50-100
#20	15-80
#50	0-15
#200	0-5

GRASSED UNDERDRAINED SOIL FILTER SCHEDULE

GRASSED UNDERDRAINED SOIL FILTER ID	EMBKMT. ELEV. [A]	WATER QUALITY STORM ELEV. [B]	2-YR STORM ELEV. [C]	10-YR STORM ELEV. [D]	25-YR STORM ELEV. [E]	TOP OF OUTLET STRUCT ELEV. [F]	BOTTOM OF STORAGE ELEV. [G]	INTERIOR UNDERDRAIN INVERT (START) [H]	UNDERDRAIN OUTLET INVERT [I]	FILTER AREA (SQ. FT.)
SF-A	24.50	23.50	23.62	23.67	23.71	23.50	23.00	19.25	18.75	580
SF-B	18.50	18.00	18.11	18.16	18.19	18.00	17.50	14.25	13.75	890

2 BIORETENTION FILTER CELL

NO SCALE

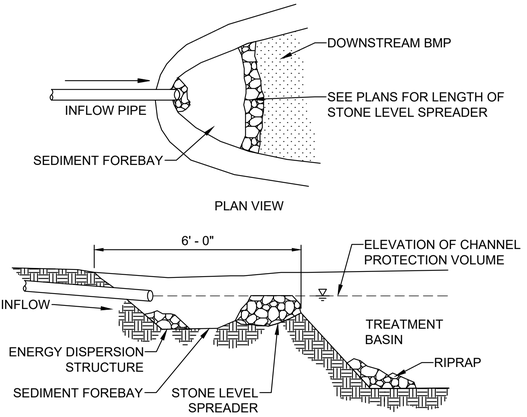

NOTES:
1. STONE SHALL BE AASHTO #3 STONE, UNIFORMLY GRADED, CLEAN.

3 LEVEL SPREADER DESIGN

NO SCALE

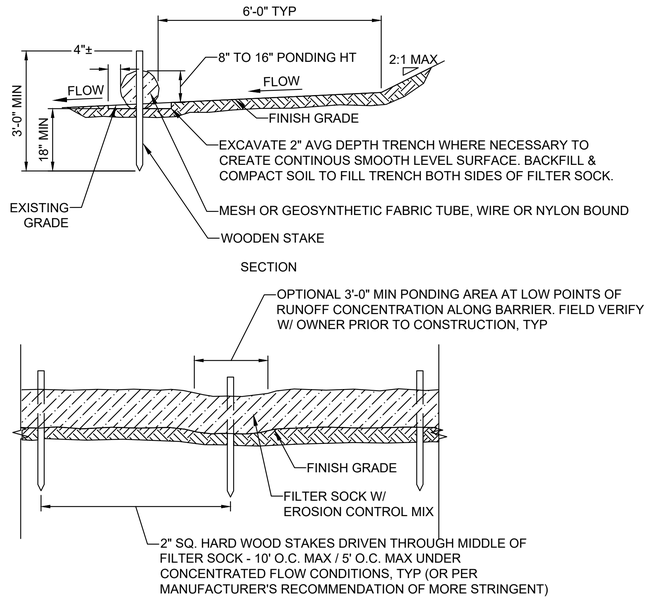

NOTES:
1. FILTER SOCKS SHALL BE INSTALLED IN CONTINUOUS SEGMENT AND IN FULL CONTACT WITH THE GROUND ON A SMOOTH LEVEL SURFACE.
2. FOLLOW MANUFACTURER'S REQUIREMENTS FOR INSTALLATION, MAINTENANCE AND REMOVAL OF FILTER SOCK MATERIALS.
3. AREAS DISTURBED BY EROSION BARRIERS SHALL BE STABILIZED AFTER REMOVAL.

1 SEDIMENT BARRIER - FILTER SOCK

NO SCALE

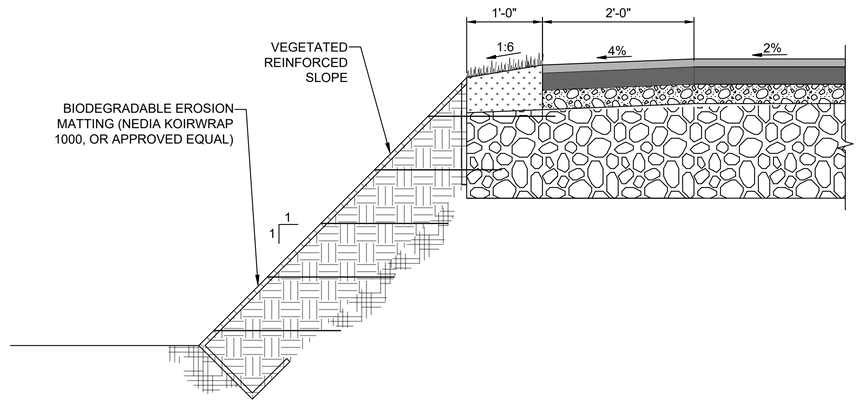

4 1:1 VEGETATED REINFORCED SLOPE

NO SCALE

FOR PERMIT

Attention: 0 1" — If this scale bar does not measure 1" then drawing is not original scale.

STATE OF MAINE — DANIEL J. BANNON No. 13033 — LICENSED PROFESSIONAL ENGINEER — APRIL 22, 2024

Designed:	DJB
Drawn:	JAM
Checked:	BJB
Approved:	BMM
P.E. No:	13033
GEI Project	2203703

GEI Consultants
GEI CONSULTANTS, INC.
5 MILK STREET
PORTLAND, ME 04101
(207)797-8901

UNIVERSITY OF NEW ENGLAND
11 HILLS BEACH RD.
BIDDEFORD, MAINE

UNIVERSITY OF NEW ENGLAND MARINE SCIENCE CENTER PIER
11 HILLS BEACH ROAD
BIDDEFORD, YORK COUNTY, MAINE

NO	DATE	ISSUE/REVISION	APP
4	9/14/2023	DEP PERMIT SET	DJB
3	6/28/2023	75% DESIGN SUBMISSION	DJB
2	2/15/2023	30% DESIGN SUBMISSION	DJB
1	12/9/2022	15% DESIGN SUBMISSIONREV	DJB
0	11/11/2022	15% DESIGN SUBMISSION	DJB

SHEET NAME: **EROSION CONTROL DETAILS I**

SHEET NO.: **C-013**

MORICI, ANTHONY \\geiconsultants.com\data\Data_Storage\Working\UNIVERSITY OF NEW ENGLAND\2203703 UNE Marine Science Center Pier\00_CAD\Design\Sheets\2203703-C-DETAILS.dwg - 9/15/2023

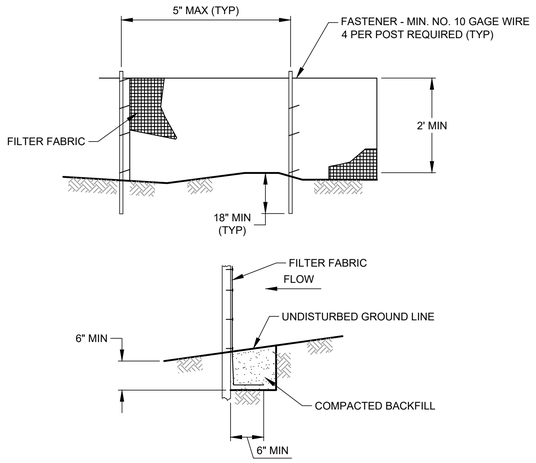

NOTES:
1. TEMPORARY SEDIMENT FENCE SHALL BE INSTALLED PRIOR TO ANY GRADING WORK IN THE AREA TO BE PROTECTED. THEY SHALL BE MAINTAINED THROUGHOUT THE CONSTRUCTION PERIOD AND REMOVED IN CONJUNCTION WITH THE FINAL GRADING AND SITE STABILIZATION.
2. FILTER FABRIC SHALL MEET THE REQUIREMENTS OF MATERIAL SPECIFICATION 592 GEOTEXTILE TABLE 1 OR 2, CLASS L WITH EQUIVALENT OPENING SIZE OF AT LEAST 30 FOR NONWOVEN AND 50 FOR WOVEN.
3. FENCE POSTS SHALL BE EITHER WOOD POST WITH A MINIMUM CROSS-SECTIONAL AREA OF 3 SQ. IN. OR A STANDARD STEEL POST.

5 SILT FENCE

NO SCALE

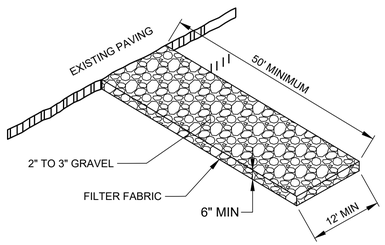

8 STABILIZED CONSTRUCTION ENTRANCE

NO SCALE

NOTES:
1. THE ENTRANCE/EXIT PAD SHOULD HAVE A LENGTH OF 50 FEET OR MORE AND A 12-FOOT MINIMUM WIDTH (OR AS APPROPRIATE TO CONTAIN THE WHEEL BASE OF CONSTRUCTION VEHICLES PLUS 3 FEET ON EITHER SIDE).
2. THE PAD SHOULD BE 6 INCHES OR MORE THICK WITH ANGULAR AGGREGATE (2-3 INCH DIAMETER). APPROPRIATE RECLAIMED CONCRETE MATERIAL MAY BE USED.
3. THE AGGREGATE SHOULD BE PLACED OVER A GEOTEXTILE FILTER TO PREVENT THE STONES FROM PUSHING INTO THE NATIVE SOIL.
4. AT THE BOTTOM OF SLOPES, A DIVERSION RIDGE SHOULD BE PROVIDED TO INTERCEPT RUNOFF.
5. BERMS MAY BE NECESSARY TO DIVERT WATER AROUND ANY EXPOSED SOIL, AND RUNOFF SHOULD BE DIRECTED TO A SEDIMENT TRAP.
6. THE WHEELS OF CONSTRUCTION EQUIPMENT MAY BE WASHED PRIOR TO EXITING THE SITE. WASHING SHOULD BE PERFORMED IN AN AREA THAT DRAINS TO A SEDIMENT TRAP OR BASIN.
7. THE PAD SHOULD BE INSPECTED WEEKLY, AND BEFORE AND AFTER EACH STORM. THE PAD MAY HAVE TO BE REPLACED IF THE VOIDS BECOME FILLED WITH SEDIMENT. STREET SWEEPING MAY BE NECESSARY

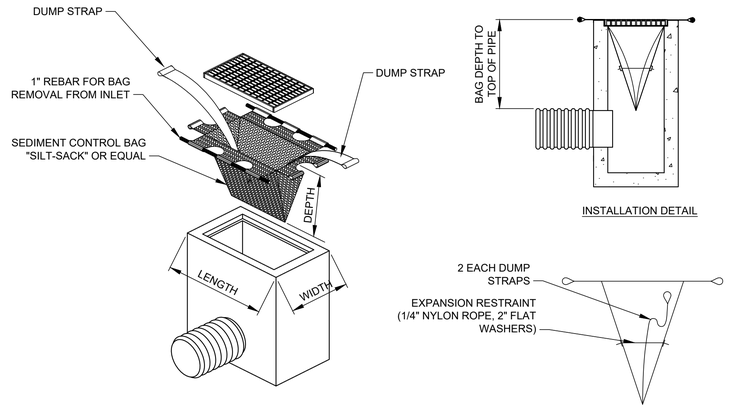

CB STYLE	LENGTH	WIDTH	DEPTH
TYPE 1 CB	2'-0"	1'-8"	VARIES
TYPCE 1 CCI	2'-5 1/2"	2'-0"	VARIES
USA G2	2'-8 1/2"	2'-3 1/2"	VARIES

NOTES:
1. THE DIMENSION CHART ABOVE IS FOR STANDARD CATCH BASINS AND INLETS ONLY. THE CONTRACTOR IS RESPONSIBLE FOR PROVIDING THE CORRECT SIZE DEVICE FOR EACH INLET.
2. FOR NON-STANDARD CATCH BASINS AND INLETS, THE CONTRACTOR SHALL MEASURE DIMENSIONS IN THE FIELD AND ORDER THE APPROPRIATE SIZE(S).
3. THE INLET SEDIMENT CONTROL DEVICE SHALL BE OF HIGH FLOW DESIGN (200 GAL/MIN/FT), AS PER THE MANUFACTURER'S SPECS.
4. THE SEDIMENT CONTROL DEVICE SHALL BE INSPECTED DAILY BY THE CONTRACTOR AND MAINTAINED A MINIMUM ONCE PER MONTH OR WITHIN THE 48 HOURS FOLLOWING A STORM EVENT. FILTER SHALL BE CLEANED IN A MANNER WHICH ENSURES THAT ALL SEDIMENT REMAINS ON SITE.
5. SUBSTITUTION OF A SHEET OF FILTER FABRIC PLACED OVER THE OPENING OF THE INLET IS NOT APPROVED.
6. RECESSED CURB INLET CATCH BASINS MUST BE BLOCKED WHEN USING FILTER FABRIC INLET SACKS, SIZE OF FILTER INLET SACK TO BE DETERMINED BY MANUFACTURER.
7. THE FILTER SHALL BE REPLACED OR CLEANED WHEN THE BAG BECOMES HALF FULL.
8. SEE INLET PROTECTION NOTES STD. DETAIL E3.

6 SILT SACK INLET PROTECTION

SCALE: N.T.S.

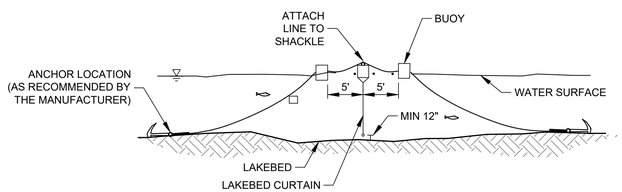

NOTES:
1. FLOATING TURBIDITY BARRIER CONSTRUCTION SHALL CONFORM WITH RELEVANT LOCAL AND STATE STANDARDS FOR SOIL EROSION AND SEDIMENT CONTROL.
2. FLOATING TURBIDITY BARRIER WILL BE INSPECTED AND MAINTAINED DAILY.

9 FLOATING TURBIDITY BARRIER

SCALE: N.T.S.

NOTES:
1. THE SOIL SURFACE SHOULD BE FINELY GRADED AND SMOOTH FOR THE BLANKET TO HAVE DIRECT CONTACT WITH THE SOIL AND TO PREVENT UNDERMINING. EROSION CONTROL BLANKETS PERFORM BEST ON LOAMY SOILS AND SHOULD NOT BE USED ON ROCKY SITES OR SHALLOW SOILS.
2. SEED SHOULD BE SOWN BEFORE INSTALLING THE EROSION CONTROL BLANKET.
3. ALWAYS UNROLL THE BLANKET DOWNHILL WITHOUT STRETCHING AND ANCHOR THE UPSLOPE EDGE IN A 12 INCH DEEP TRENCH THAT IS BACKFILLED AND TAMPED.
4. OVERLAP SHINGLE STYLE A MINIMUM OF 12 INCHES AT THE TOP OF EACH ROW AND 4 INCHES AT THE EDGES OF PARALLEL ROWS. ANCHOR ALONG THE OVERLAP WITH A MAXIMUM SPACING OF 3 FEET OR AS REQUIRED BY THE MANUFACTURER.

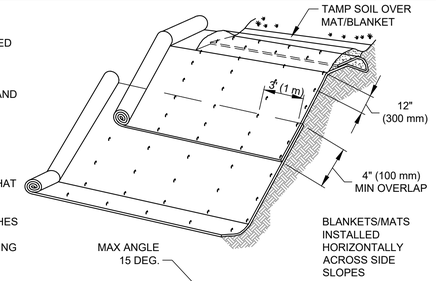

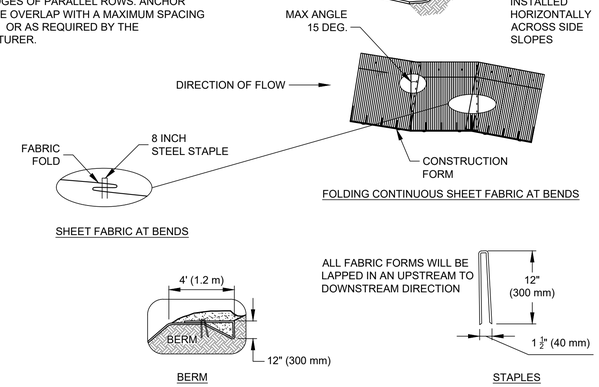

7 BIODEGRADABLE STABILIZATION MATTING

NO SCALE

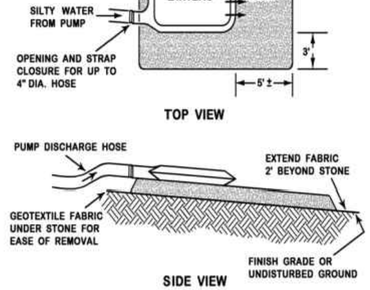

NOTES:
1. INSTALL THE FILTER BAG PRIOR TO INITIATING ANY ACTIVITIES WHICH WILL REQUIRE DEWATERING.
2. THE TYPE OF FABRIC SHOULD BE BASED ON THE SIZE OF SOIL PARTICLES TO BE TRAPPED (I.E. A WOVEN MATERIAL FOR COARSE PARTICLES AND A NONWOVEN MATERIAL FOR FINER PARTICLES).
3. A FILTER BAG SHOULD BE LOCATED IN AN AREA MOSTLY LEVEL (WITH LESS THAN 5% SLOPE). A PAD OF CRUSHED GRAVEL MAY BE PROVIDED.
4. AVOID DISCHARGING TO AN AREA THAT IS BARE OF VEGETATION OR NEWLY VEGETATED. ANY SIGN OF EROSION OR CHANNELIZATION FROM THE DISCHARGED WATER REQUIRES IMMEDIATELY CORRECTION.
5. FILTER BAGS HAVE A FINITE CAPACITY FOR SEDIMENT COLLECTION AND MAY BE PRONE TO PLUGGING. AVOID OVER-PRESSURIZING THE BAG OR IT MAY BURST.

10 GEOTEXTILE FILTER BAG

NO SCALE

FOR PERMIT

Attention:
0 1"
If this scale bar does not measure 1" then drawing is not original scale.

STATE OF MAINE
DANIEL J. BANNON
No. 13033
LICENSED
PROFESSIONAL ENGINEER
April 22, 2024

Designed:	DJB
Drawn:	JAM
Checked:	BJB
Approved:	BMM
P.E. No:	13033
GEI Project	2203703

GEI Consultants
GEI CONSULTANTS, INC.
5 MILK STREET
PORTLAND, ME 04101
(207)797-8901

UNIVERSITY OF NEW ENGLAND
11 HILLS BEACH RD.
BIDDEFORD, MAINE

UNIVERSITY OF NEW ENGLAND MARINE SCIENCE CENTER PIER
11 HILLS BEACH ROAD
BIDDEFORD, YORK COUNTY, MAINE

NO	DATE	ISSUE/REVISION	APP
4	9/14/2023	DEP PERMIT SET	DJB
3	6/28/2023	75% DESIGN SUBMISSION	DJB
2	2/15/2023	30% DESIGN SUBMISSION	DJB
1	12/9/2022	15% DESIGN SUBMISSIONREV	DJB
0	11/11/2022	15% DESIGN SUBMISSION	DJB

SHEET NAME
EROSION CONTROL DETAILS II

SHEET NO.
C-014

MORICI, ANTHONY \\geiconsultants.com\data\Data_Storage\Working\UNIVERSITY OF NEW ENGLAND\2203703 UNE Marine Science Center Pier\00_CAD\Design\Sheets\2203703-C-DETAILS.dwg - 9/14/2023

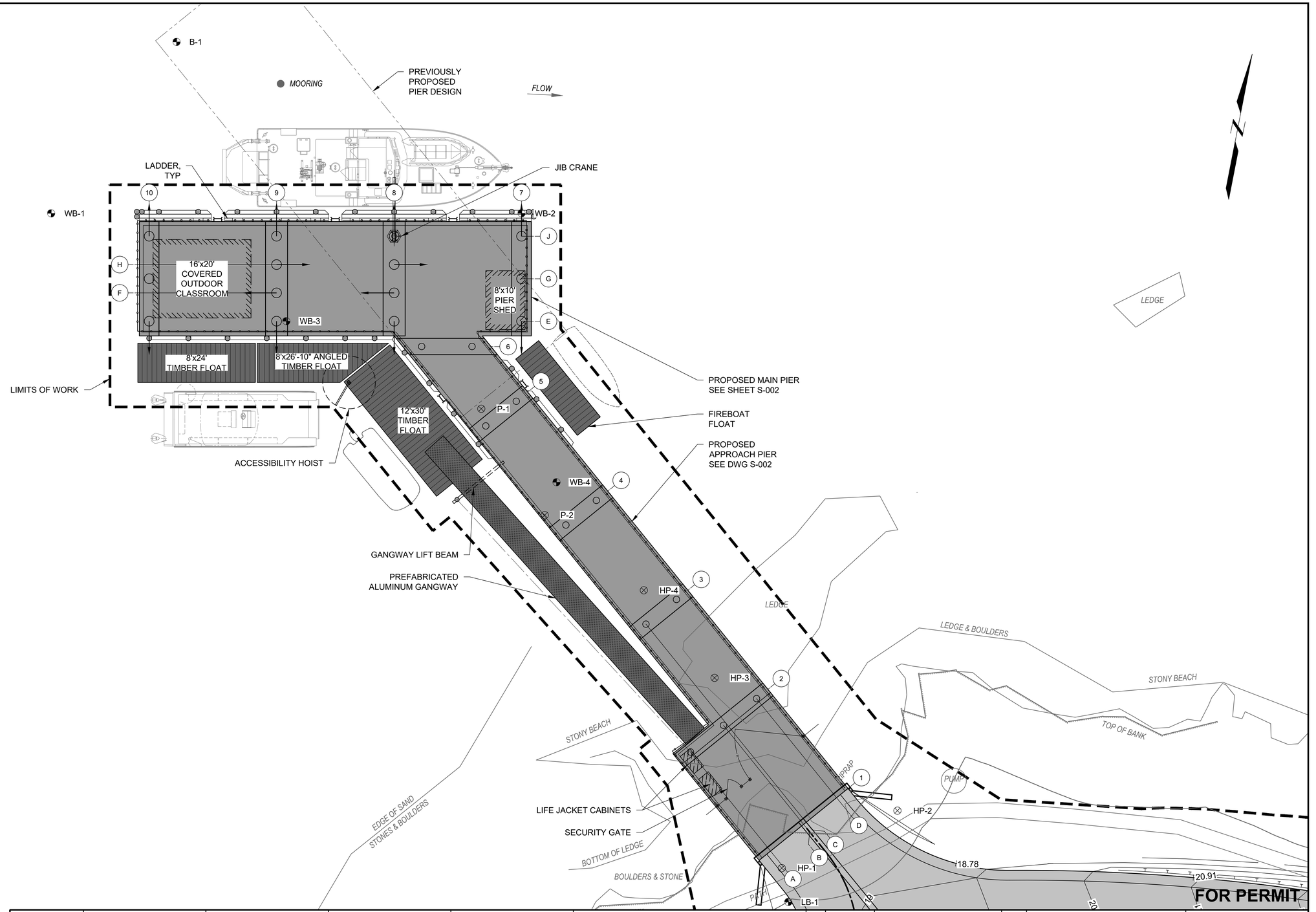

ELEVATION	MLLW	NAVD88*
BFE	+19.0	+14.0
HAT	+11.6	+6.6
MHHW	+9.7	+4.7
MHW	+9.3	+4.3
MSL	+4.8	-0.2
MLW	+0.3	-4.7
MLLW	0.0	-5.0

*PROJECT DATUM

0 10 20
SCALE, FEET

Attention:
0 1"
If this scale bar does not measure 1" then drawing is not original scale.

STATE OF MAINE
DANIEL J. BANNON
No. 13033
REGISTERED PROFESSIONAL ENGINEER
April 22, 2024

Designed:	DJB
Drawn:	JAM
Checked:	BJB
Approved:	BMM
P.E. No:	13033
GEI Project	2203703

GEI Consultants
GEI CONSULTANTS, INC.
5 MILK STREET
PORTLAND, ME 04101
(207)797-8901

UNE
UNIVERSITY OF NEW ENGLAND
11 HILLS BEACH RD.
BIDDEFORD, MAINE

UNIVERSITY OF NEW ENGLAND MARINE SCIENCE CENTER PIER

11 HILLS BEACH ROAD
BIDDEFORD, YORK COUNTY, MAINE

NO	DATE	ISSUE/REVISION	APP
4	9/14/2023	DEP PERMIT SET	DJB
3	6/28/2023	75% DESIGN SUBMISSION	DJB
2	2/15/2023	30% DESIGN SUBMISSION	DJB
1	12/9/2022	15% DESIGN SUBMISSIONREV	DJB
0	11/11/2022	15% DESIGN SUBMISSION	DJB

SHEET NAME
PIER LAYOUT PLAN

SHEET NO.
S-001

MORICI, ANTHONY \\geiconsultants.com\data\Data_Storage\Working\UNIVERSITY OF NEW ENGLAND\2203703 UNE Marine Science Center Pier\00_CAD\Design\Sheets\2203703-S-001.dwg - 9/14/2023

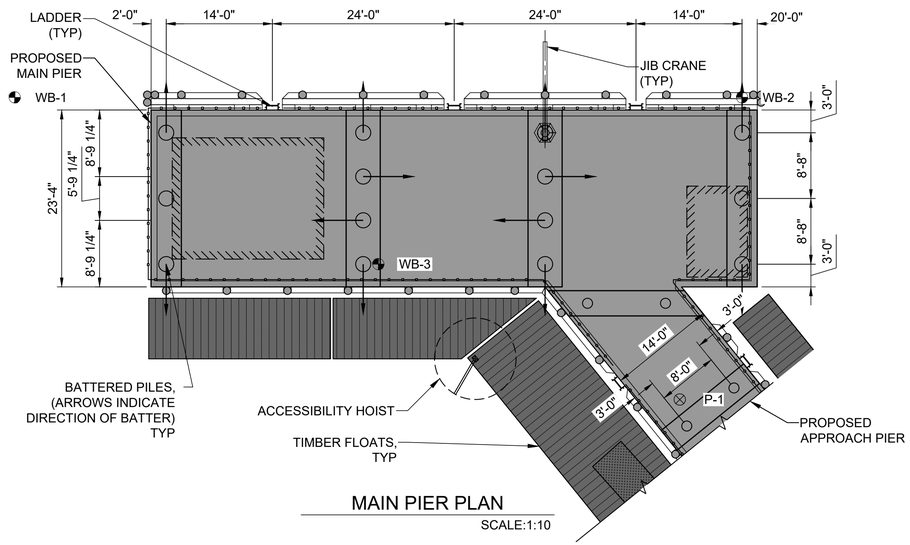

MAIN PIER PLAN

SCALE:1:10

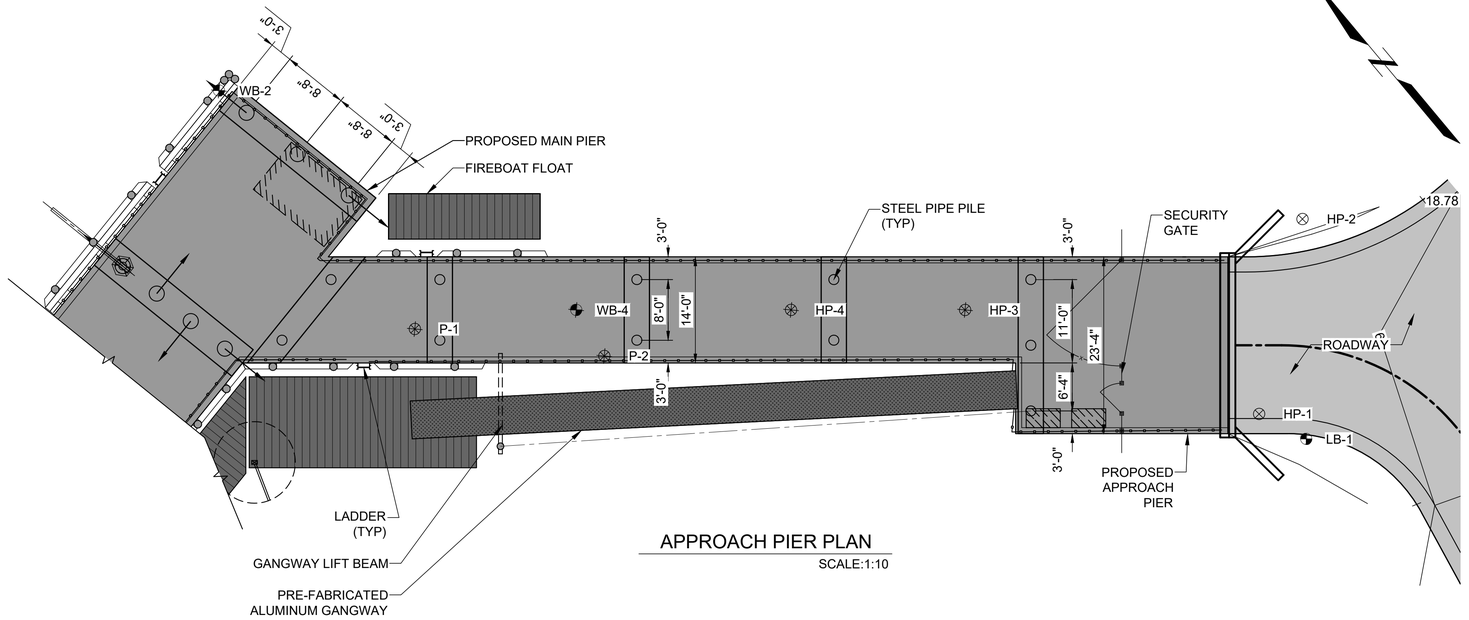

APPROACH PIER PLAN

SCALE:1:10

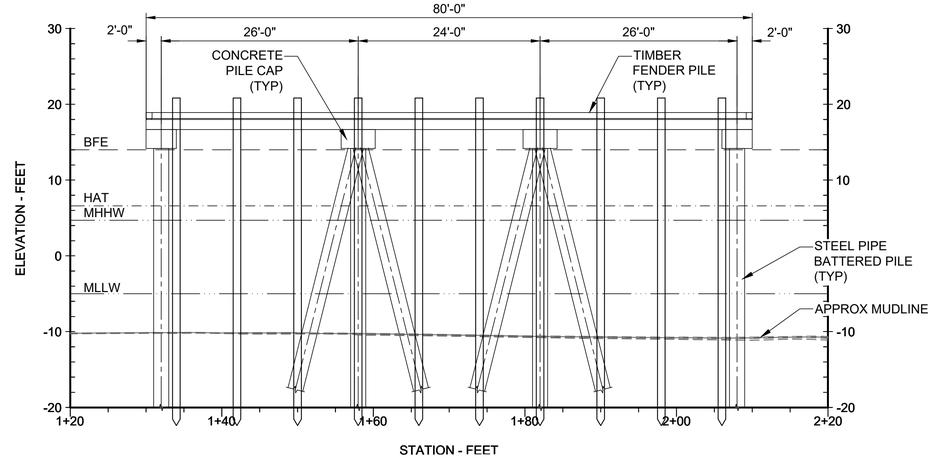

MAIN PIER ELEVATION

SCALE:1:10

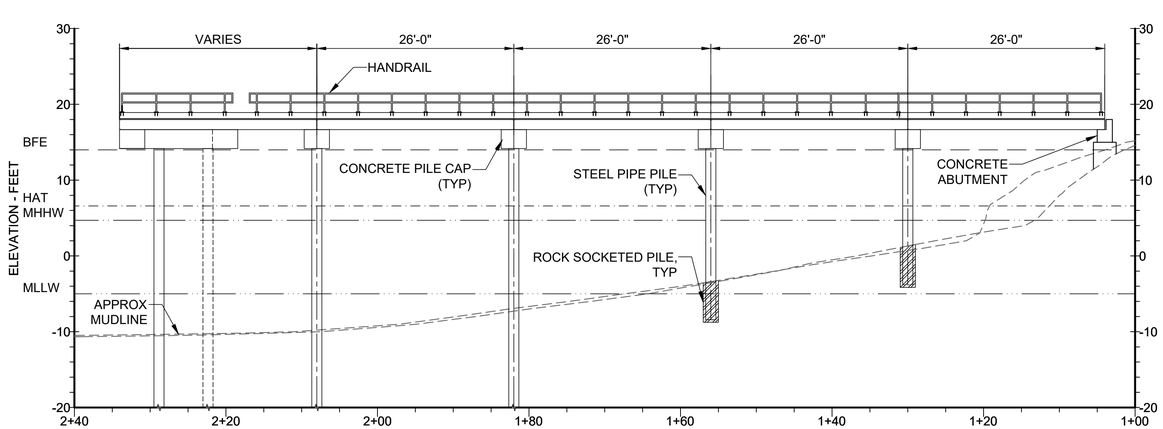

APPROACH PIER ELEVATION

SCALE:1:10

0 10 20

SCALE, FEET

ELEVATION	MLLW	NAVD88*
BFE	+19.0	+14.0
HAT	+11.6	+6.6
MHHW	+9.7	+4.7
MHW	+9.3	+4.3
MSL	+4.8	-0.2
MLW	+0.3	-4.7
MLLW	0.0	-5.0

*PROJECT DATUM

FOR PERMIT

Attention:

0 1"

If this scale bar does not measure 1" then drawing is not original scale.

STATE OF MAINE
DANIEL J. BANNON
No. 13033
REGISTERED PROFESSIONAL ENGINEER
April 22, 2024

Designed:	DJB
Drawn:	JAM
Checked:	BJB
Approved:	BMM
P.E. No:	13033
GEI Project	2203703

GEI Consultants
GEI CONSULTANTS, INC.
5 MILK STREET
PORTLAND, ME 04101
(207)797-8901

UNE
UNIVERSITY OF NEW ENGLAND

11 HILLS BEACH RD.
BIDDEFORD, MAINE

UNIVERSITY OF NEW ENGLAND MARINE SCIENCE CENTER PIER

11 HILLS BEACH ROAD
BIDDEFORD, YORK COUNTY, MAINE

NO	DATE	ISSUE/REVISION	APP
4	9/14/2023	DEP PERMIT SET	DJB
3	6/28/2023	75% DESIGN SUBMISSION	DJB
2	2/15/2023	30% DESIGN SUBMISSION	DJB
1	12/9/2022	15% DESIGN SUBMISSIONREV	DJB
0	11/11/2022	15% DESIGN SUBMISSION	DJB

SHEET NAME

PIER PLANS AND ELEVATIONS

SHEET NO.

S-002

MORICI, ANTHONY \\geiconsultants.com\data\Data_Storage\Working\UNIVERSITY OF NEW ENGLAND\2203703 UNE Marine Science Center Pier\00_CAD\Design\Sheets\2203703-S-002.dwg - 9/14/2023

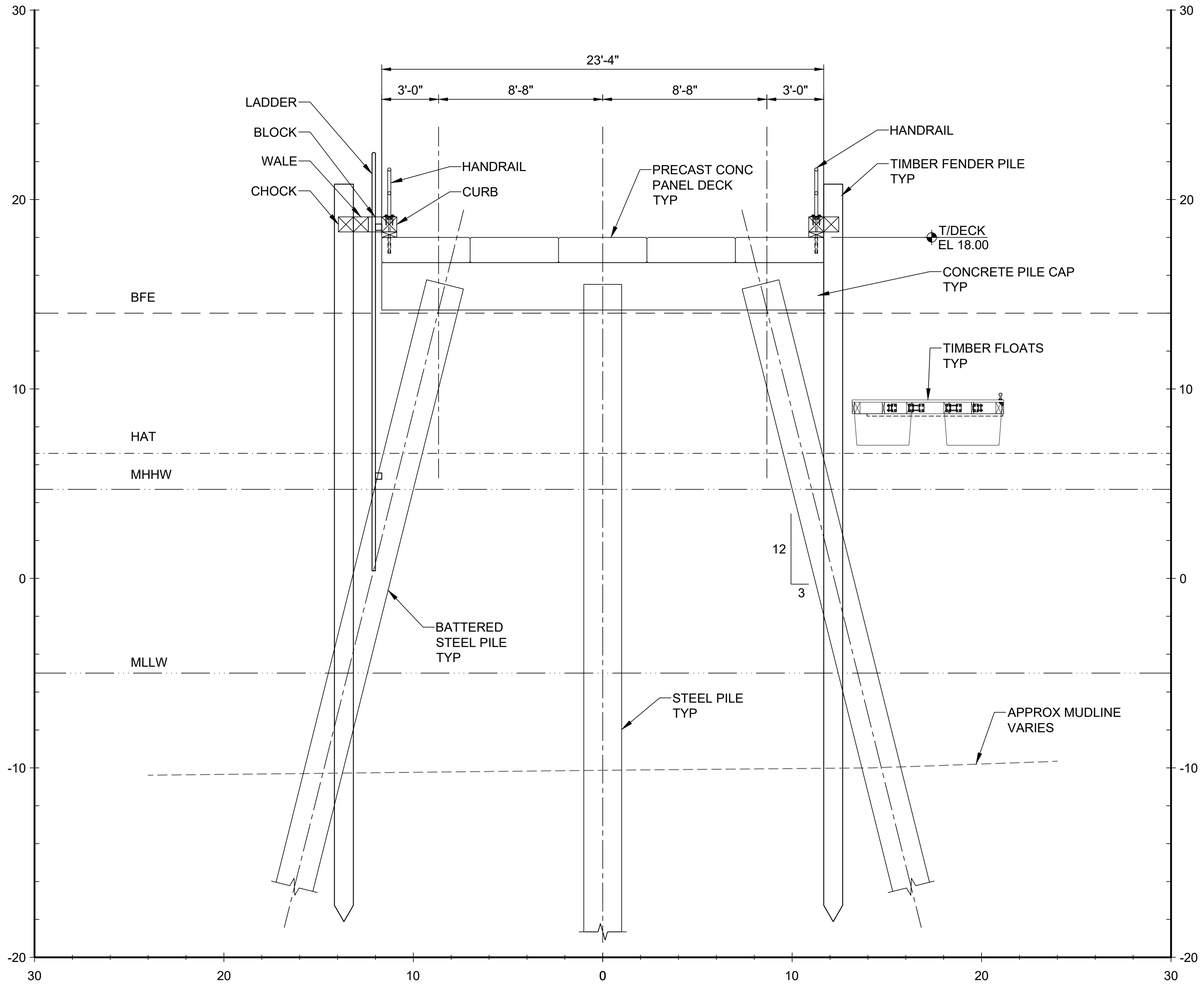

SECTION
MAIN PIER AT BENT 10 SCALE: 1"=4'

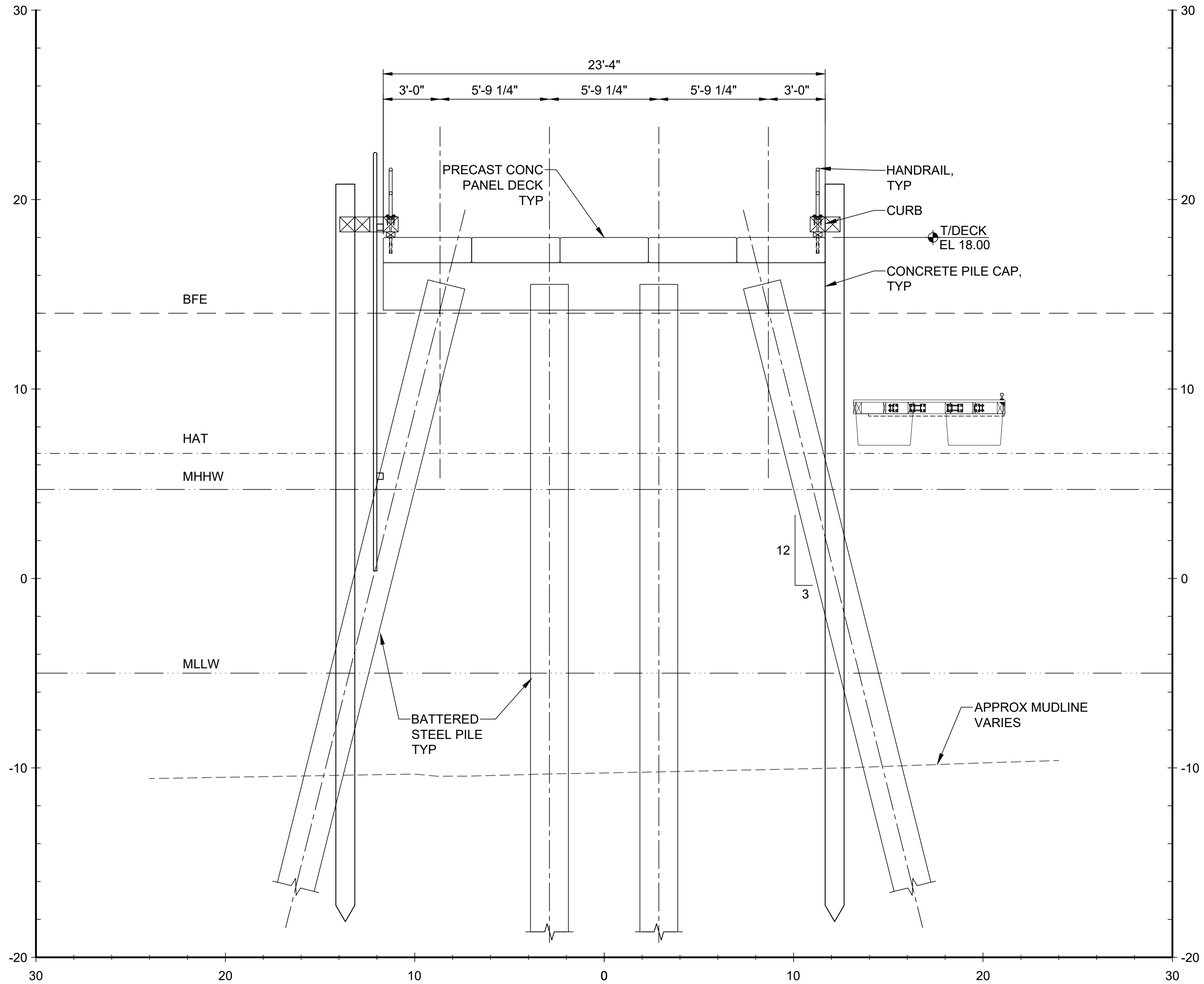

SECTION
MAIN PIER AT BENT 9 SCALE: 1"=4'

0 2 4 8
SCALE, FEET

ELEVATION	MLLW	NAVD88*
BFE	+19.0	+14.0
HAT	+11.6	+6.6
MHHW	+9.7	+4.7
MHW	+9.3	+4.3
MSL	+4.8	-0.2
MLW	+0.3	-4.7
MLLW	0.0	-5.0

*PROJECT DATUM

FOR PERMIT

Attention:
0 1"
If this scale bar does not measure 1" then drawing is not original scale.

STATE OF MAINE
DANIEL J. BANNON
No. 13033
LICENSED
PROFESSIONAL ENGINEER
April 22, 2024

Designed:	DJB
Drawn:	JAM
Checked:	BJB
Approved:	BMM
P.E. No:	13033
GEI Project	2203703

GEI Consultants
GEI CONSULTANTS, INC.
5 MILK STREET
PORTLAND, ME 04101
(207)797-8901

UNE
UNIVERSITY OF NEW ENGLAND
11 HILLS BEACH RD.
BIDDEFORD, MAINE

UNIVERSITY OF NEW ENGLAND MARINE SCIENCE CENTER PIER

11 HILLS BEACH ROAD
BIDDEFORD, YORK COUNTY, MAINE

NO	DATE	ISSUE/REVISION	APP
4	9/14/2023	DEP PERMIT SET	DJB
3	6/28/2023	75% DESIGN SUBMISSION	DJB
2	2/15/2023	30% DESIGN SUBMISSION	DJB
1	12/9/2022	15% DESIGN SUBMISSIONREV	DJB
0	11/11/2022	15% DESIGN SUBMISSION	DJB

SHEET NAME
TYPICAL PIER SECTIONS (1 OF 2)

SHEET NO.
S-003

MORICI, ANTHONY \\gisconsultants.com\data\Data_Storage\Working\UNIVERSITY OF NEW ENGLAND\2203703 UNE Marine Science Center Pier\00_CAD\Design\Sheets\2203703-S-003.dwg - 9/14/2023

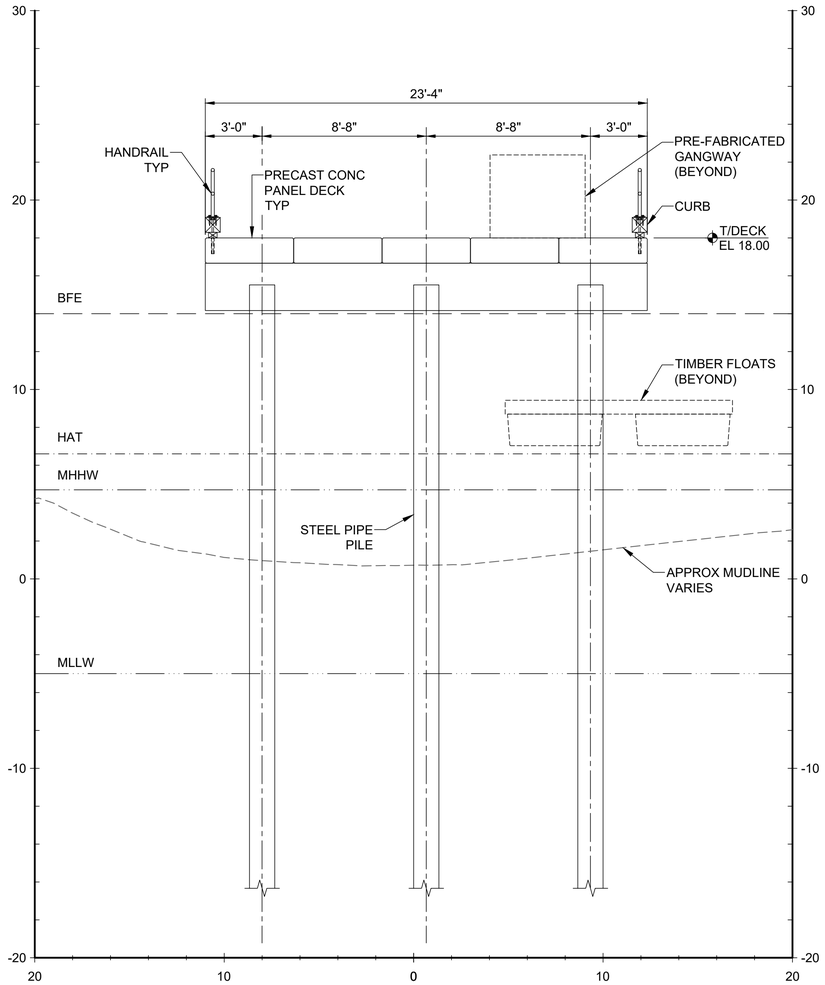

SECTION
28' WIDE APPROACH PIER AT BENT 2 SCALE: 1"=4'

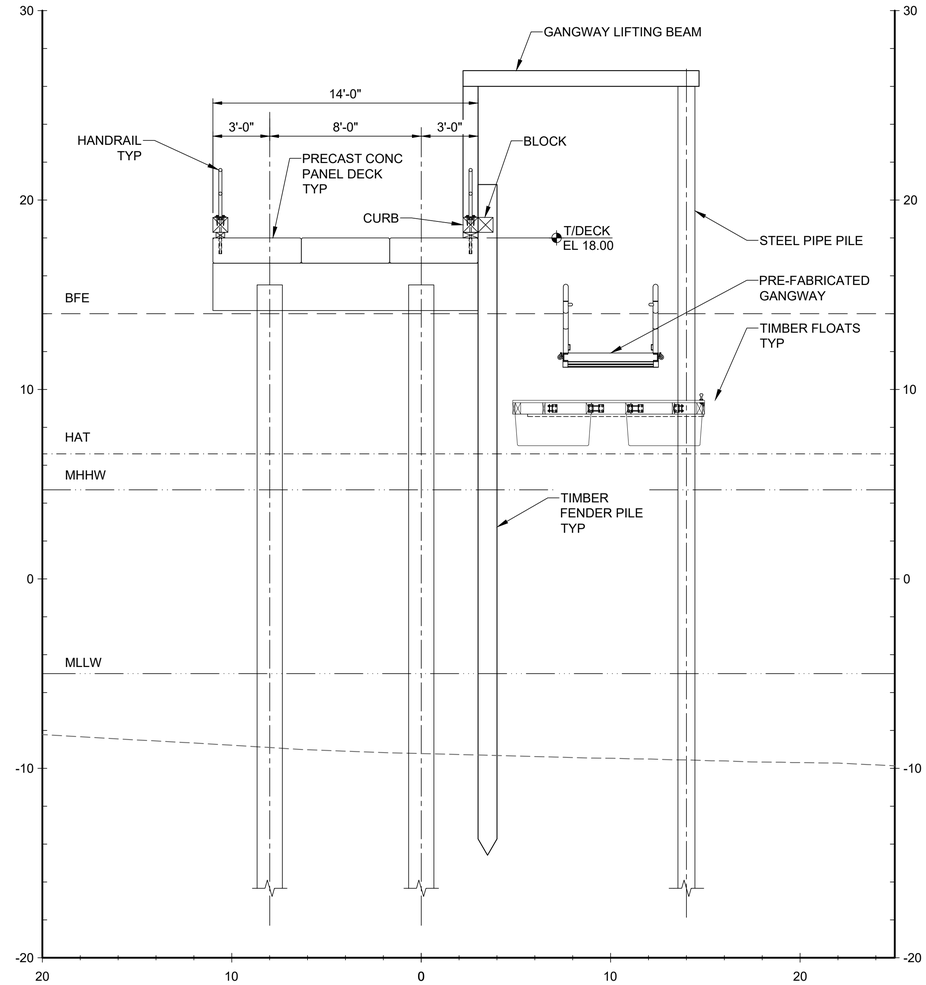

SECTION
14' WIDE APPROACH PIER AT GANGWAY HOIST SCALE: 1"=4'

0 2 4 8
SCALE, FEET

ELEVATION	MLLW	NAVD88*
BFE	+19.0	+14.0
HAT	+11.6	+6.6
MHHW	+9.7	+4.7
MHW	+9.3	+4.3
MSL	+4.8	-0.2
MLW	+0.3	-4.7
MLLW	0.0	-5.0

*PROJECT DATUM

Attention:
0 1"
If this scale bar does not measure 1" then drawing is not original scale.

STATE OF MAINE
DANIEL J. BANNON
No. 13033
LICENSED PROFESSIONAL ENGINEER
April 22, 2024

Designed:	DJB
Drawn:	JAM
Checked:	BJB
Approved:	BMM
P.E. No:	13033
GEI Project	2203703

GEI Consultants
GEI CONSULTANTS, INC.
5 MILK STREET
PORTLAND, ME 04101
(207)797-8901

UNIVERSITY OF NEW ENGLAND
11 HILLS BEACH RD.
BIDDEFORD, MAINE

UNIVERSITY OF NEW ENGLAND MARINE SCIENCE CENTER PIER
11 HILLS BEACH ROAD
BIDDEFORD, YORK COUNTY, MAINE

NO	DATE	ISSUE/REVISION	APP
4	9/14/2023	DEP PERMIT SET	DJB
3	6/28/2023	75% DESIGN SUBMISSION	DJB
2	2/15/2023	30% DESIGN SUBMISSION	DJB
1	12/9/2022	15% DESIGN SUBMISSIONREV	DJB
0	11/11/2022	15% DESIGN SUBMISSION	DJB

SHEET NAME
TYPICAL PIER SECTIONS (2 OF 2)

SHEET NO.
S-004

FOR PERMIT

MORICI, ANTHONY \\geiconsultants.com\data\Data_Storage\Working\UNIVERSITY OF NEW ENGLAND\2203703 UNE Marine Science Center Pier\00_CAD\Design\Sheets\2203703-S-004.dwg - - 9/14/2023

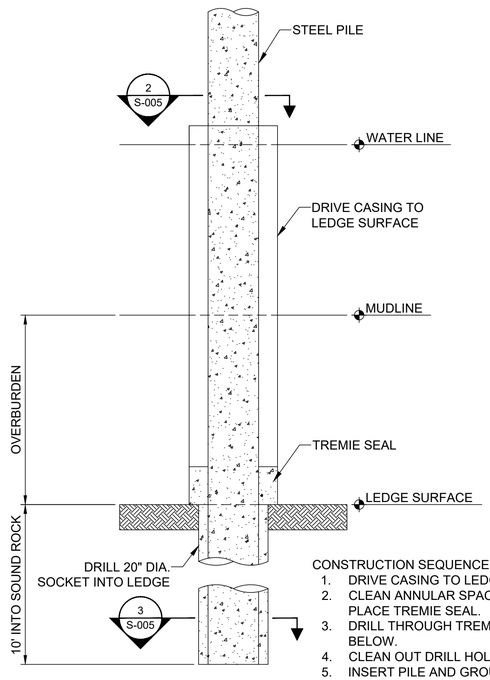

CONSTRUCTION SEQUENCE

1. DRIVE CASING TO LEDGE SURFACE.
2. CLEAN ANNULAR SPACE TO LEDGE SURFACE, PLACE TREMIE SEAL.
3. DRILL THROUGH TREMIE INTO SOUND ROCK BELOW.
4. CLEAN OUT DRILL HOLE.
5. INSERT PILE AND GROUT TO SURFACE.
6. REMOVE CASING.
7. FILL STEEL PIPE PILE TO TOP WITH CONCRETE.

1 DETAIL
PILE SOCKET SCALE: 1" = 2'

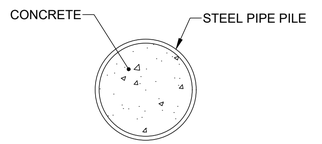

2 SECTION
CONCRETE FILLED STEEL PIPE PILE SCALE: 1" = 1'

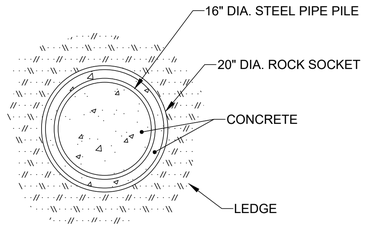

3 SECTION
ROCK SOCKET SCALE: 1" = 1'

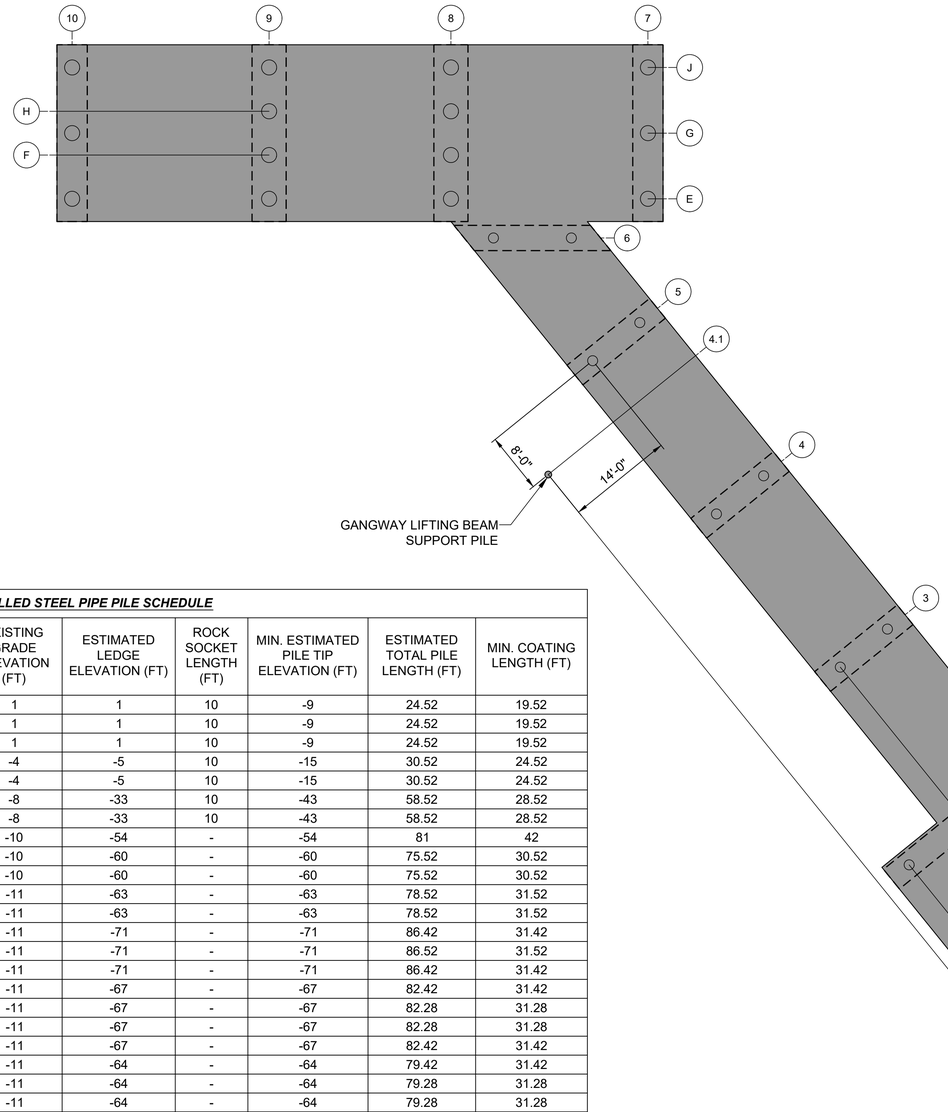

DETAIL
MAIN PIER SCALE: 1" = 10"

CONCRETE FILLED STEEL PIPE PILE SCHEDULE

PILE DESIGNATION	PILE SIZE (INCHES)	BATTER	CUTOFF ELEVATION (FT)	EXISTING GRADE ELEVATION (FT)	ESTIMATED LEDGE ELEVATION (FT)	ROCK SOCKET LENGTH (FT)	MIN. ESTIMATED PILE TIP ELEVATION (FT)	ESTIMATED TOTAL PILE LENGTH (FT)	MIN. COATING LENGTH (FT)
2A	16x5/8	VERTICAL	15.52	1	1	10	-9	24.52	19.52
2B	16x5/8	VERTICAL	15.52	1	1	10	-9	24.52	19.52
2D	16x5/8	VERTICAL	15.52	1	1	10	-9	24.52	19.52
3C	16x5/8	VERTICAL	15.52	-4	-5	10	-15	30.52	24.52
3D	16x5/8	VERTICAL	15.52	-4	-5	10	-15	30.52	24.52
4C	16x5/8	VERTICAL	15.52	-8	-33	10	-43	58.52	28.52
4D	16x5/8	VERTICAL	15.52	-8	-33	10	-43	58.52	28.52
4.1-A.1	10.75x5/8	VERTICAL	27	-10	-54	-	-54	81	42
5C	16x5/8	VERTICAL	15.52	-10	-60	-	-60	75.52	30.52
5D	16x5/8	VERTICAL	15.52	-10	-60	-	-60	75.52	30.52
6C	16x5/8	VERTICAL	15.52	-11	-63	-	-63	78.52	31.52
6D	16x5/8	VERTICAL	15.52	-11	-63	-	-63	78.52	31.52
7E	24x5/8	3:12	15.42	-11	-71	-	-71	86.42	31.42
7G	24x5/8	VERTICAL	15.52	-11	-71	-	-71	86.52	31.52
7J	24x5/8	3:12	15.42	-11	-71	-	-71	86.42	31.42
8E	24x5/8	3:12	15.42	-11	-67	-	-67	82.42	31.42
8F	24x5/8	3:12	15.28	-11	-67	-	-67	82.28	31.28
8H	24x5/8	3:12	15.28	-11	-67	-	-67	82.28	31.28
8J	24x5/8	3:12	15.42	-11	-67	-	-67	82.42	31.42
9E	24x5/8	3:12	15.42	-11	-64	-	-64	79.42	31.42
9F	24x5/8	3:12	15.28	-11	-64	-	-64	79.28	31.28
9H	24x5/8	3:12	15.28	-11	-64	-	-64	79.28	31.28
9J	24x5/8	3:12	15.42	-11	-64	-	-64	79.42	31.42
10E	24x5/8	3:12	15.42	-11	-66	-	-66	81.42	31.42
10G	24x5/8	VERTICAL	15.52	-11	-66	-	-66	81.52	31.52
10J	24x5/8	3:12	15.42	-11	-66	-	-66	81.42	31.42
							TOTAL	1821.5	

SCHEDULE NOTES

1. ALL ELEVATIONS REFERENCED IN TABLE ARE IN NAVD88 DATUM.

0 10 20
SCALE, FEET

0 1 2 4
SCALE, FEET

ELEVATION	MLLW	NAVD88*
BFE	+19.0	+14.0
HAT	+11.6	+6.6
MHHW	+9.7	+4.7
MHW	+9.3	+4.3
MSL	+4.8	-0.2
MLW	+0.3	-4.7
MLLW	0.0	-5.0

*PROJECT DATUM

FOR PERMIT

Attention:
0 1"
If this scale bar does not measure 1" then drawing is not original scale.

STATE OF MAINE
DANIEL J. BANNON
No. 13033
LICENSED
PROFESSIONAL ENGINEER
April 22, 2024

Designed:	DJB
Drawn:	JAM
Checked:	BJB
Approved:	BMM
P.E. No:	13033
GEI Project	2203703

GEI Consultants
GEI CONSULTANTS, INC.
5 MILK STREET
PORTLAND, ME 04101
(207)797-8901

UNE
UNIVERSITY OF NEW ENGLAND
11 HILLS BEACH RD.
BIDDEFORD, MAINE

UNIVERSITY OF NEW ENGLAND MARINE SCIENCE CENTER PIER
11 HILLS BEACH ROAD
BIDDEFORD, YORK COUNTY, MAINE

NO	DATE	ISSUE/REVISION	APP
4	9/14/2023	DEP PERMIT SET	DJB
3	6/28/2023	75% DESIGN SUBMISSION	DJB
2	2/15/2023	30% DESIGN SUBMISSION	DJB
1	12/9/2022	15% DESIGN SUBMISSIONREV	DJB
0	11/11/2022	15% DESIGN SUBMISSION	DJB

SHEET NAME
PILE PLAN

SHEET NO.
S-005

MORICI, ANTHONY \\geiconsultants.com\data\Data_Storage\Working\UNIVERSITY OF NEW ENGLAND\2203703 UNE Marine Science Center Pier\00_CAD\Design\Sheets\2203703-S-005.dwg - 9/14/2023

PRECAST DECK PANEL SCHEDULE					
PANEL ID	A	B	C	D	QTY.
A	4'-8"	25'-2"	-	-	5
B	4'-8"	24'-3"	-	-	9
C	4'-8"	-	13'-3"	17'-0"	1
D	4'-8"	-	17'-0"	20'-9 1/2"	1
E	4'-8"	-	20'-9 1/2"	24'-7"	1
F	4'-8"	26'-0"	-	-	10
G	4'-8"	22'-0"	-	-	5

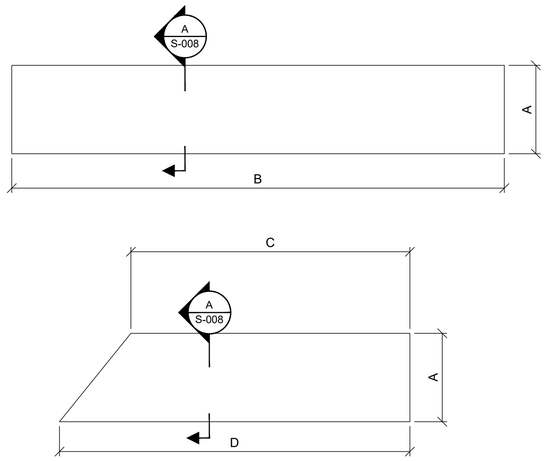

1 DETAIL-PLAN
PRECAST DECK PANEL SCALE: 1"=4'

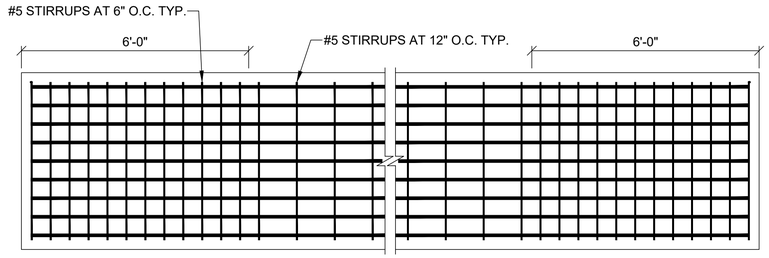

3 DETAIL-PLAN PLANKS A, B, F, & G
PRECAST DECK PANEL
STIRRUP SPACING SCALE: 1"=2'

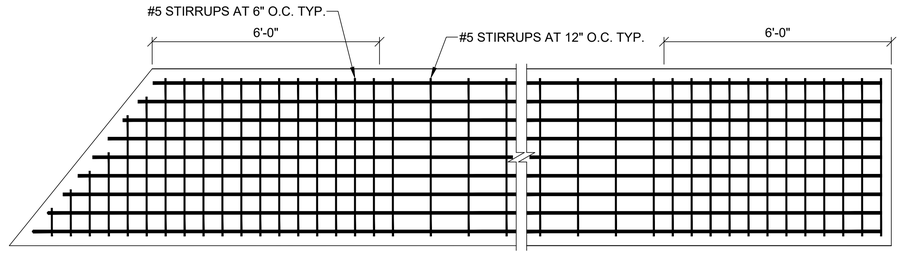

4 DETAIL-PLAN PLANKS C, D, & E
PRECAST DECK PANEL
STIRRUP SPACING SCALE: 1"=2'

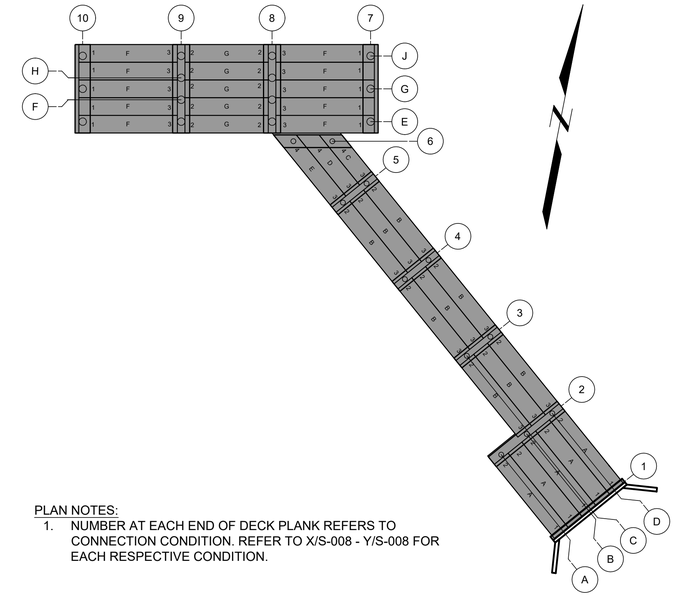

PLAN NOTES:
1. NUMBER AT EACH END OF DECK PLANK REFERS TO CONNECTION CONDITION. REFER TO X/S-008 - Y/S-008 FOR EACH RESPECTIVE CONDITION.

9 DETAIL
PIER DECK PANELS N.T.S.

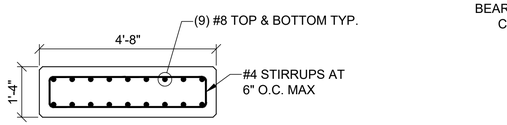

A SECTION
PRECAST DECK PANEL SCALE: 1"=2'

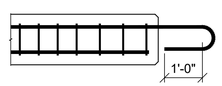

B SECTION
PRECAST DECK PANEL
CONNECTION END 2 & 3 SCALE: 1"=2'

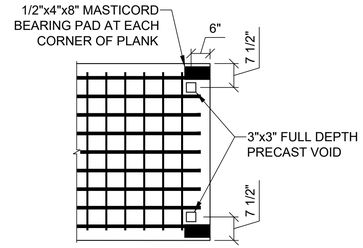

5 DETAIL - PLAN
DECK PANEL
CONNECTION 1 SCALE: 1"=2'

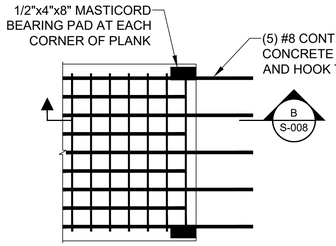

6 DETAIL - PLAN
DECK PANEL
CONNECTION 2 SCALE: 1"=2'

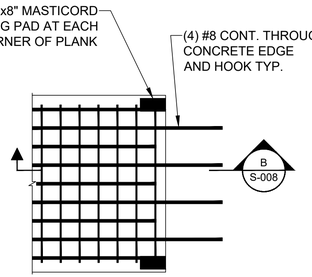

7 DETAIL - PLAN
DECK PANEL
CONNECTION 3 SCALE: 1"=2'

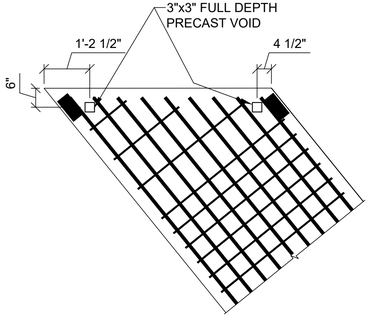

8 DETAIL - PLAN
DECK PANEL
CONNECTION 1 SCALE: 1"=2'

0 10 20
SCALE, FEET

0 1 2 4
SCALE, FEET

ELEVATION	MLLW	NAVD88*
BFE	+19.0	+14.0
HAT	+11.6	+6.6
MHHW	+9.7	+4.7
MHW	+9.3	+4.3
MSL	+4.8	-0.2
MLW	+0.3	-4.7
MLLW	0.0	-5.0

*PROJECT DATUM

FOR PERMIT

Attention:
0 1"
If this scale bar does not measure 1" then drawing is not original scale.

STATE OF MAINE
DANIEL J. BANNON
No. 13033
LICENSED
PROFESSIONAL ENGINEER
April 22, 2024

Designed:	DJB
Drawn:	JAM
Checked:	BJB
Approved:	BMM
P.E. No:	13033
GEI Project	2203703

GEI Consultants
GEI CONSULTANTS, INC.
5 MILK STREET
PORTLAND, ME 04101
(207)797-8901

UNE
UNIVERSITY OF NEW ENGLAND
11 HILLS BEACH RD.
BIDDEFORD, MAINE

UNIVERSITY OF NEW ENGLAND
MARINE SCIENCE CENTER
PIER
11 HILLS BEACH ROAD
BIDDEFORD, YORK COUNTY, MAINE

NO	DATE	ISSUE/REVISION	APP
4	9/14/2023	DEP PERMIT SET	DJB
3	6/28/2023	75% DESIGN SUBMISSION	DJB
2	2/15/2023	30% DESIGN SUBMISSION	DJB
1	12/9/2022	15% DESIGN SUBMISSIONREV	DJB
0	11/11/2022	15% DESIGN SUBMISSION	DJB

SHEET NAME
PRECAST DECK PANEL PLAN

SHEET NO.
S-008

MORICI, ANTHONY \\bos1v-fs02\Data_Storage\Working\UNIVERSITY OF NEW ENGLAND\2203703 UNE Marine Science Center Pier\00_CAD\Design\Sheets\2203703-S-008.dwg - 9/14/2023

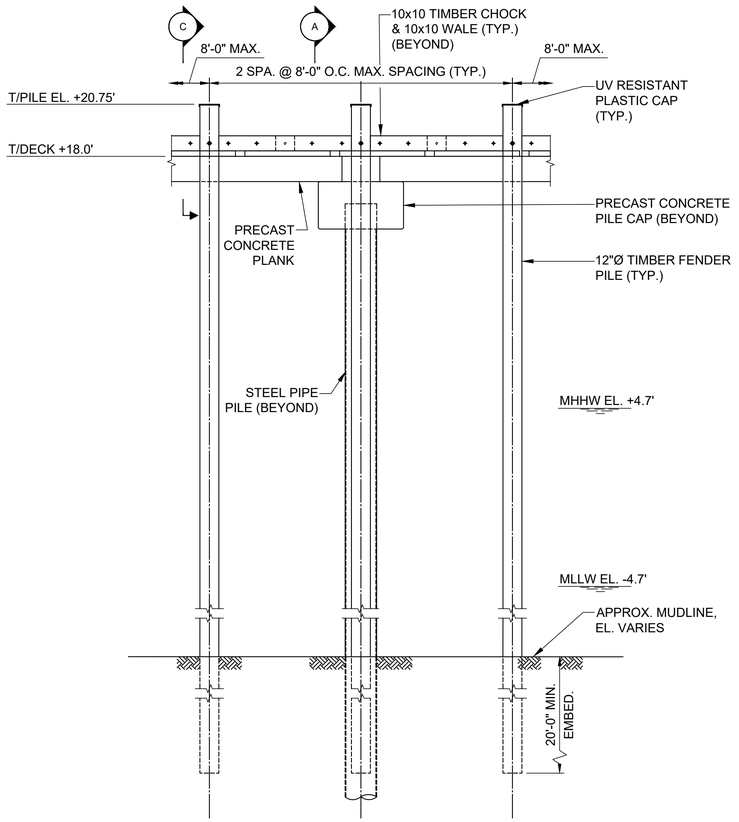

TIMBER FENDER DETAIL

SCALE: 1/4" = 1'-0"

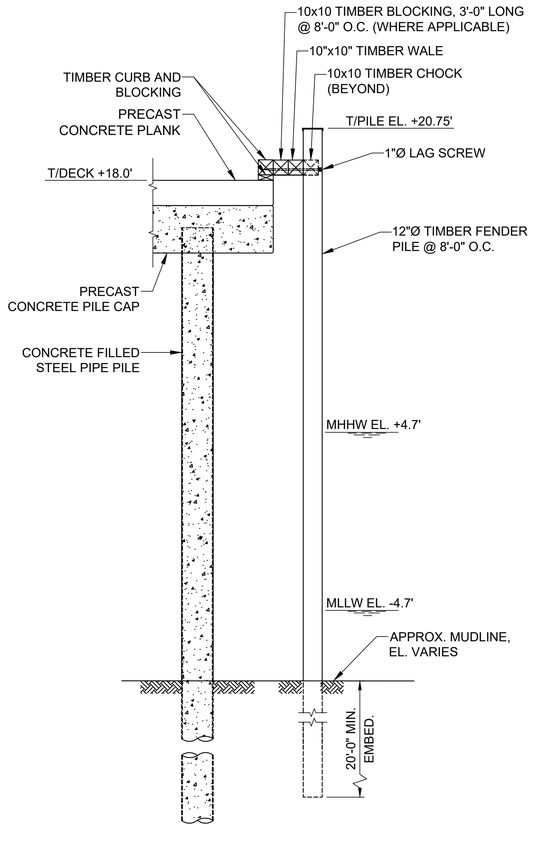

A TIMBER FENDER SECTION

SCALE: 1/4" = 1'-0"

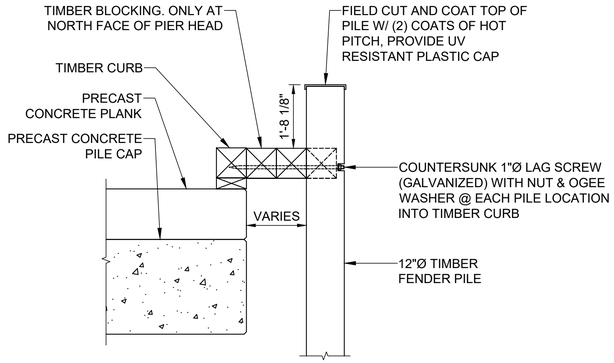

C FENDER PILE CONNECTION

SCALE: 1/2" = 1'-0"

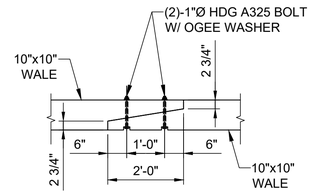

D WALE SPLICE DETAIL

SCALE: 1/2" = 1'-0"

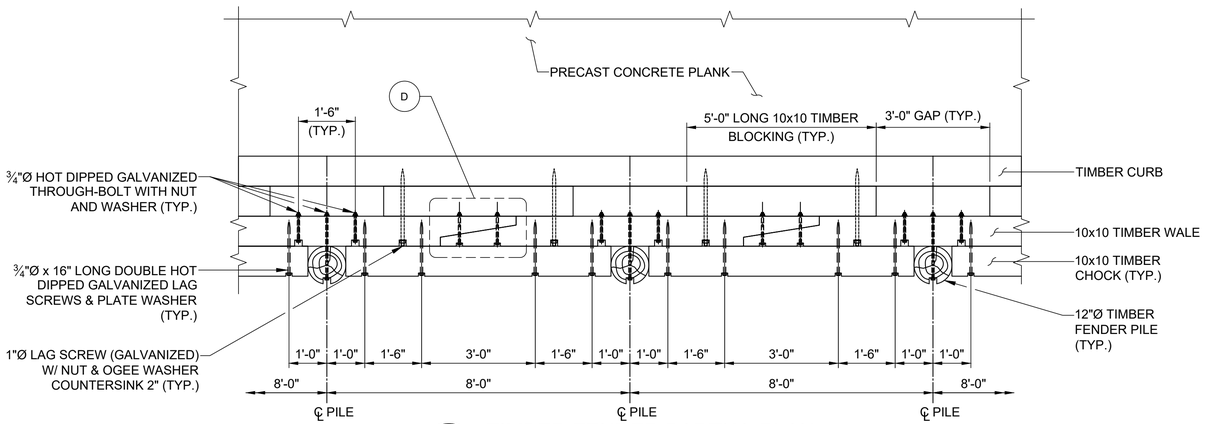

B TIMBER FENDER PARTIAL PLAN

SCALE: 1/2" = 1'-0"

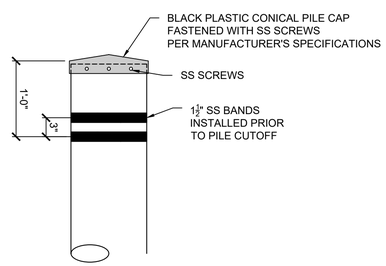

E PILE BANDING DETAIL

SCALE: 1" = 1'-0"

ELEVATION	MLLW	NAVD88*
BFE	+19.0	+14.0
HAT	+11.6	+6.6
MHHW	+9.7	+4.7
MHW	+9.3	+4.3
MSL	+4.8	-0.2
MLW	+0.3	-4.7
MLLW	0.0	-5.0

*PROJECT DATUM

FOR PERMIT

Attention:

0 1"

If this scale bar does not measure 1" then drawing is not original scale.

STATE OF MAINE — DANIEL J. BANNON No. 13033 — LICENSED PROFESSIONAL ENGINEER

April 22, 2024

Designed:	DJB
Drawn:	JAM
Checked:	BJB
Approved:	BMM
P.E. No:	13033
GEI Project	2203703

GEI Consultants

GEI CONSULTANTS, INC.
5 MILK STREET
PORTLAND, ME 04101
(207)797-8901

UNIVERSITY OF NEW ENGLAND

11 HILLS BEACH RD.
BIDDEFORD, MAINE

UNIVERSITY OF NEW ENGLAND MARINE SCIENCE CENTER PIER

11 HILLS BEACH ROAD
BIDDEFORD, YORK COUNTY, MAINE

NO	DATE	ISSUE/REVISION	APP
4	9/14/2023	DEP PERMIT SET	DJB
3	6/28/2023	75% DESIGN SUBMISSION	DJB
2	2/15/2023	30% DESIGN SUBMISSION	DJB
1	12/9/2022	15% DESIGN SUBMISSIONREV	DJB
0	11/11/2022	15% DESIGN SUBMISSION	DJB

SHEET NAME

MISCELLANEOUS DETAILS (1 OF 5)

SHEET NO.

S-009

MORICI, ANTHONY \\ost1-fs02\Data_Storage\Working\UNIVERSITY OF NEW ENGLAND\2203703 UNE Marine Science Center Pier\00_CAD\Design\Sheets\2203703-S-009.dwg - 9/14/2023

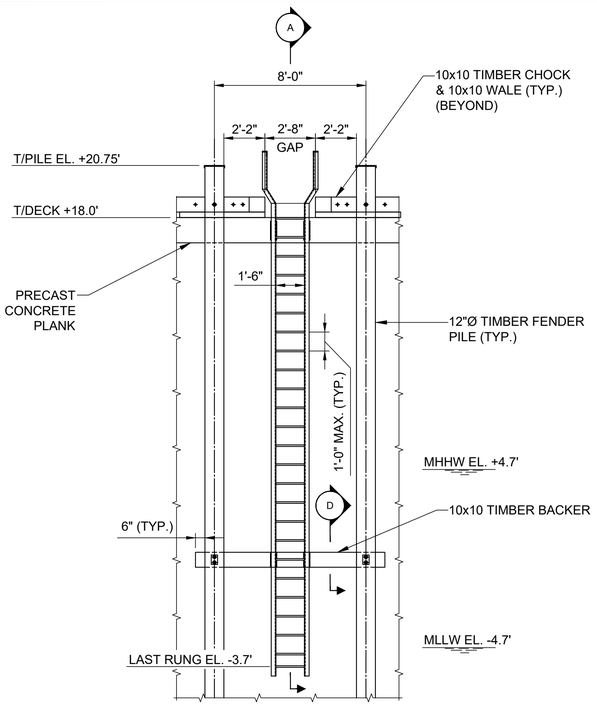

LADDER DETAIL

SCALE: 1/4" = 1'-0"

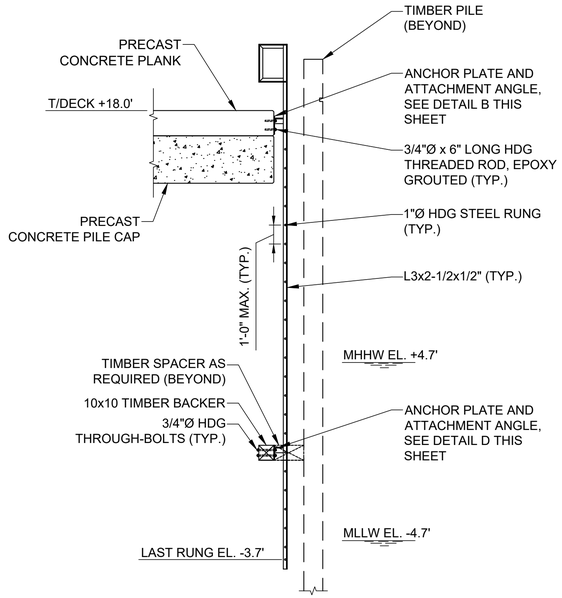

A LADDER SECTION

SCALE: 1/4" = 1'-0"

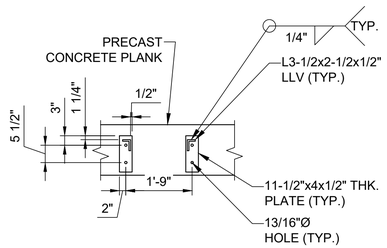

B LADDER CONNECTION (TOP)

SCALE: 1/2" = 1'-0"

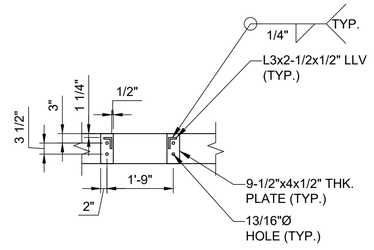

C LADDER CONNECTION (BOTTOM)

SCALE: 1/2" = 1'-0"

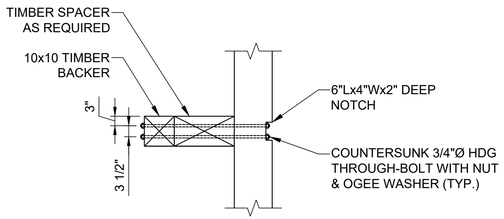

D TIMBER BACKER CONNECTION

SCALE: 1/2" = 1'-0"

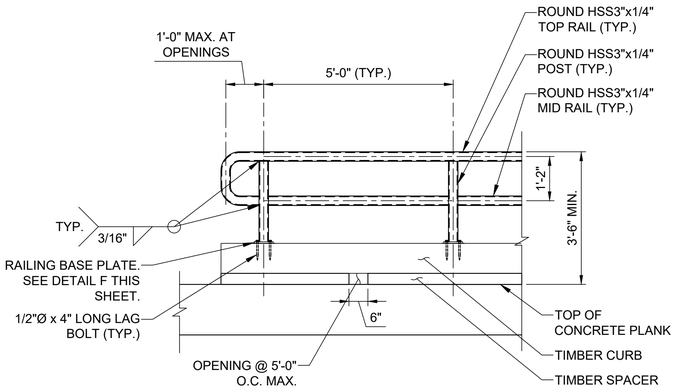

E RAILING SECTION

SCALE: 1/2" = 1'-0"

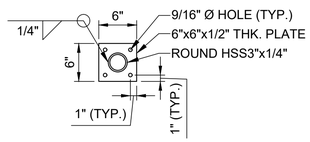

F RAILING BASEPLATE DETAIL

SCALE: 1" = 1'-0"

ELEVATION	MLLW	NAVD88*
BFE	+19.0	+14.0
HAT	+11.6	+6.6
MHHW	+9.7	+4.7
MHW	+9.3	+4.3
MSL	+4.8	-0.2
MLW	+0.3	-4.7
MLLW	0.0	-5.0

*PROJECT DATUM

FOR PERMIT

Attention:

0 1"

If this scale bar does not measure 1" then drawing is not original scale.

STATE OF MAINE
DANIEL J. BANNON
No. 13033
LICENSED
PROFESSIONAL ENGINEER
April 22, 2024

Designed:	DJB
Drawn:	JAM
Checked:	BJB
Approved:	BMM
P.E. No:	13033
GEI Project	2203703

GEI Consultants
GEI CONSULTANTS, INC.
5 MILK STREET
PORTLAND, ME 04101
(207)797-8901

UNE
UNIVERSITY OF NEW ENGLAND
11 HILLS BEACH RD.
BIDDEFORD, MAINE

UNIVERSITY OF NEW ENGLAND MARINE SCIENCE CENTER PIER
11 HILLS BEACH ROAD
BIDDEFORD, YORK COUNTY, MAINE

NO	DATE	ISSUE/REVISION	APP
4	9/14/2023	DEP PERMIT SET	DJB
3	6/28/2023	75% DESIGN SUBMISSION	DJB
2	2/15/2023	30% DESIGN SUBMISSION	DJB
1	12/9/2022	15% DESIGN SUBMISSIONREV	DJB
0	11/11/2022	15% DESIGN SUBMISSION	DJB

SHEET NAME
MISCELLANEOUS DETAILS (2 OF 5)

SHEET NO.
S-010

MCRICI, ANTHONY \\bos1vlv002\Data_Storage\Working\UNIVERSITY OF NEW ENGLAND\2203703 UNE Marine Science Center Pier\00_CAD\Design\Sheets\2203703-S-010.dwg - 9/14/2023

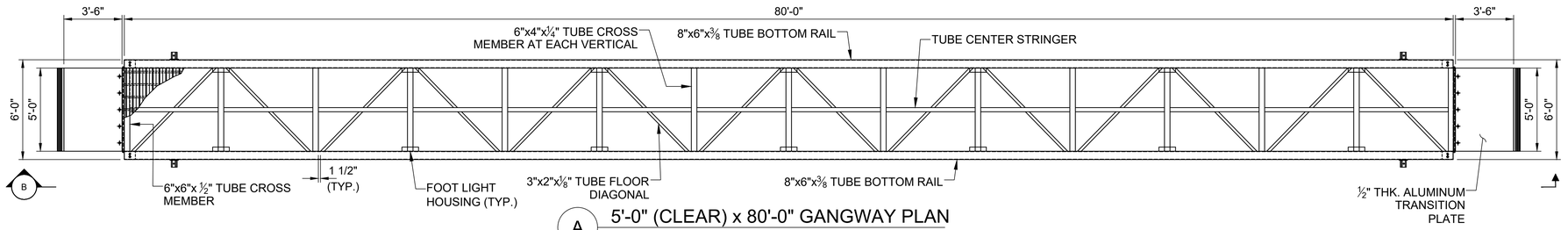

A 5'-0" (CLEAR) x 80'-0" GANGWAY PLAN

SCALE: 1/4" = 1'-0"

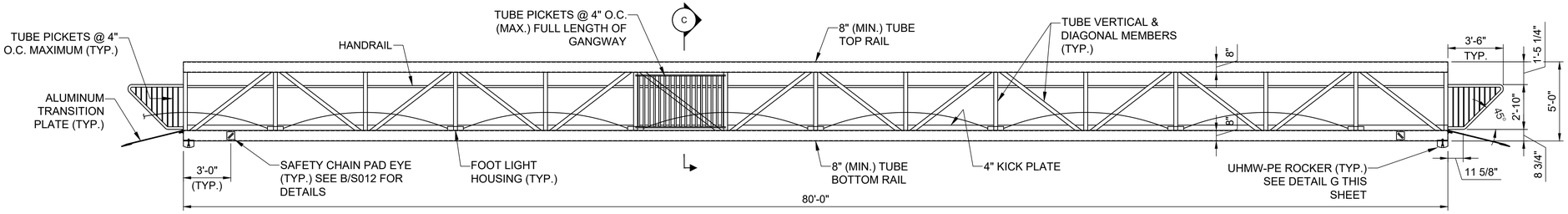

B GANGWAY ELEVATION

SCALE: 1/4" = 1'-0"

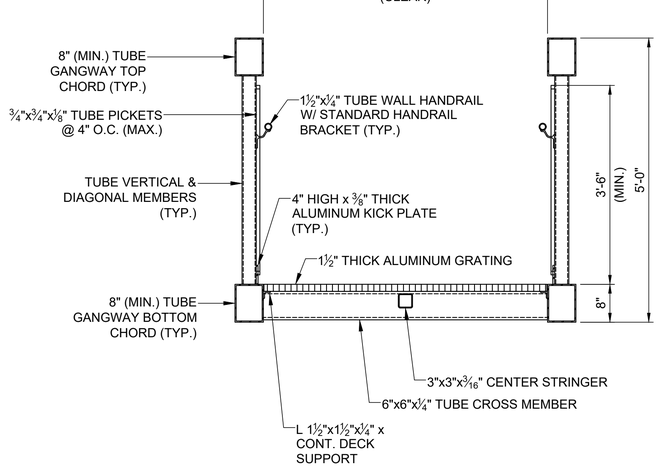

C TYPICAL GANGWAY SECTION

SCALE: 3/4" = 1'-0"

NOTE(S):
1. CONTRACTOR AND GANGWAY MANUFACTURER SHALL DETERMINE FINAL GANGWAY MEMBER SIZES AND SUBMIT TO ENGINEER FOR REVIEW AND APPROVAL.
2. ALUMINUM GRATING SHALL MEET ADA REQUIREMENTS.

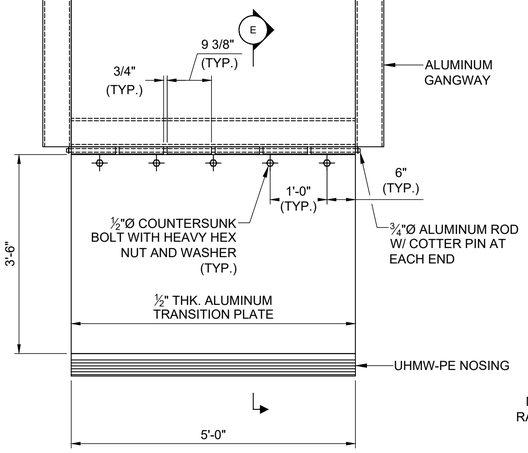

D TRANSITION PLATE DETAIL

SCALE: 3/4" = 1'-0"

NOTES:
1. CONTRACTOR SHALL DETERMINE FINAL GANGWAY MEMBER SIZES. MEMBERS ONLY SHOWN SCHEMATICALLY FOR REFERENCE.
2. CONTRACTOR SHALL SUBMIT FINAL GANGWAY SHOP DRAWINGS AND CALCULATION PACKAGE SIGNED AND SEALED BY A PROFESSIONAL ENGINEER LICENSED IN THE STATE OF MAINE.
3. ALL GANGWAY TUBE MEMBERS SHALL BE 6061-T6 ALUMINUM.
4. ALL GANGWAY TUBE MEMBERS SHALL BE CAPPED AND SEALED W/ ALUMINUM PLATES AT EXPOSED ENDS.

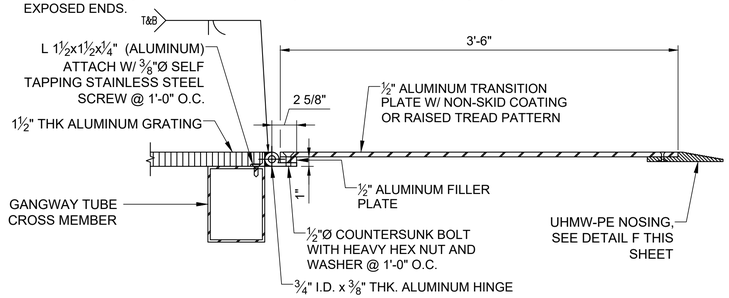

E GANGWAY TRANSITION PLATE SECTION

SCALE: 1-1/2" = 1'-0"

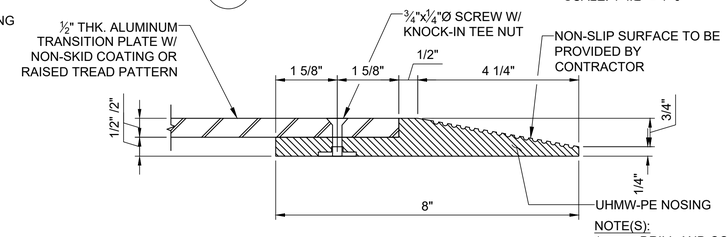

F UHMW-PE NOSING DETAIL

SCALE: 6" = 1'-0"

NOTE(S):
1. DRILL AND COUNTER BORE TRANSITION PLATES. COUNTERSINK HOLES FOR TEE NUTS TO TWICE BASE THICKNESS. SCREWS TO BE COUNTERSUNK INTO PLATE. INSTALL NEW SCREWS OVER SILICONE TO COVER EXPOSED ALUMINUM.
2. UHMW-PE NOSING DETAILS TO BE DETERMINED AFTER TRANSITION PLATE INSTALLATION AND SHALL BE IN COMPLIANCE WITH THE REQUIREMENTS SET FORTH IN ADA.

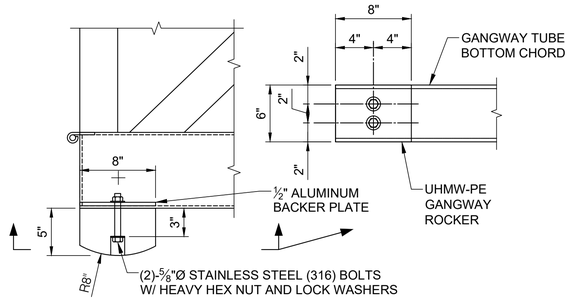

G GANGWAY ROCKER DETAIL

SCALE: 1-1/2" = 1'-0"

NOTES:
1. ROCKER MATERIAL SHALL BE VIRGIN UHMW-PE, BLACK IN COLOR.
2. ALUMINUM BACKER PLATE PLAN DIMENSIONS SHALL MATCH ROCKER PLAN DIMENSIONS.

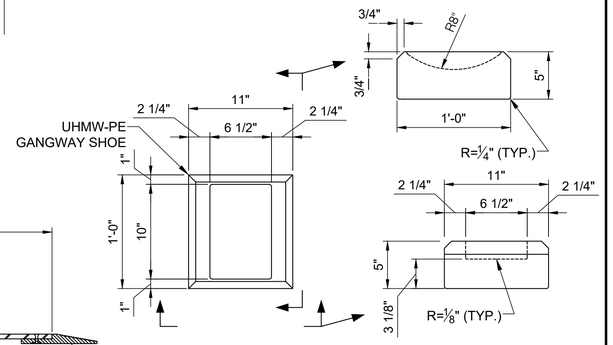

J GANGWAY SHOE DETAIL

SCALE: 1-1/2" = 1'-0"

NOTE: SHOE MATERIAL SHALL BE VIRGIN UHMW-PE, BLACK IN COLOR.

ELEVATION	MLLW	NAVD88*
BFE	+19.0	+14.0
HAT	+11.6	+6.6
MHHW	+9.7	+4.7
MHW	+9.3	+4.3
MSL	+4.8	-0.2
MLW	+0.3	-4.7
MLLW	0.0	-5.0

*PROJECT DATUM

FOR PERMIT

Attention:
0 1"
If this scale bar does not measure 1" then drawing is not original scale.

STATE OF MAINE — DANIEL J. BANNON No. 13033 — LICENSED PROFESSIONAL ENGINEER
April 22, 2024

Designed:	DJB
Drawn:	JAM
Checked:	BJB
Approved:	BMM
P.E. No:	13033
GEI Project	2203703

GEI Consultants
GEI CONSULTANTS, INC.
5 MILK STREET
PORTLAND, ME 04101
(207)797-8901

UNE
UNIVERSITY OF NEW ENGLAND
11 HILLS BEACH RD.
BIDDEFORD, MAINE

UNIVERSITY OF NEW ENGLAND MARINE SCIENCE CENTER PIER
11 HILLS BEACH ROAD
BIDDEFORD, YORK COUNTY, MAINE

NO	DATE	ISSUE/REVISION	APP
4	9/14/2023	DEP PERMIT SET	DJB
3	6/28/2023	75% DESIGN SUBMISSION	DJB
2	2/15/2023	30% DESIGN SUBMISSION	DJB
1	12/9/2022	15% DESIGN SUBMISSIONREV	DJB
0	11/11/2022	15% DESIGN SUBMISSION	DJB

SHEET NAME: **MISCELLANEOUS DETAILS (3 OF 5)**

SHEET NO.: **S-011**

MORICI, ANTHONY \\bos1v-fs02\Data_Storage\Working\UNIVERSITY OF NEW ENGLAND\2203703 UNE Marine Science Center Pier\00_CAD\Design\Sheets\2203703-S-011.dwg - 9/14/2023

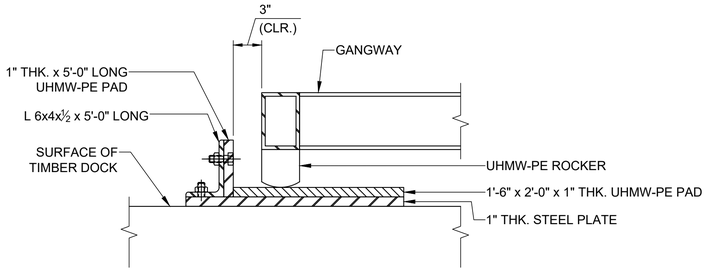

A GANGWAY LANDING AT DOCKS
SCALE: 1-1/2" = 1'-0"

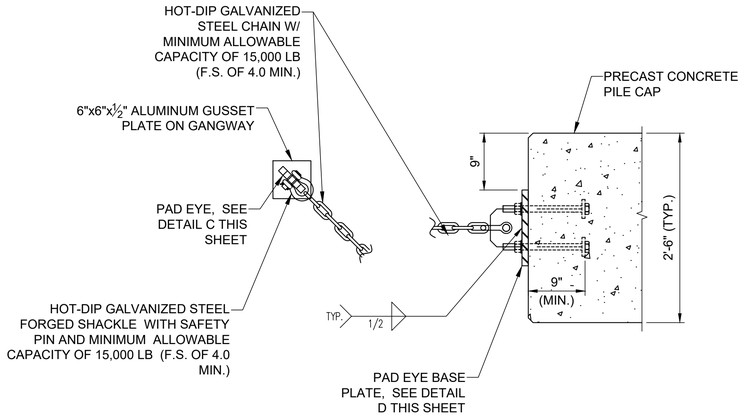

B SAFETY CHAIN ASSEMBLY
SCALE: 1" = 1'-0"

NOTE: CONTRACTOR TO DETERMINE ASSEMBLY LENGTH BASED ON PAD EYE LOCATION ON GANGWAY SUCH THAT UHMW-PE SHOE CANNOT MOVE OFF THE SUPPORTING PLATE.

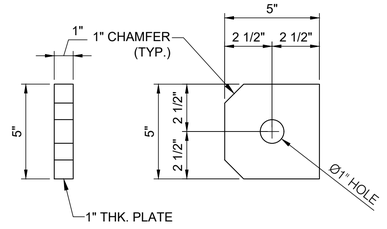

C PAD EYE DETAIL
SCALE: 3" = 1'-0"

NOTE: PAD EYE ON GANGWAY SHALL BE ALUMINUM. PAD EYE ON PILE CAP SHALL BE HDG STEEL.

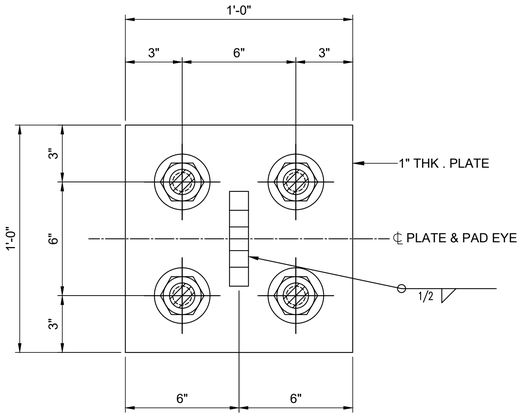

D PAD EYE BASE PLATE DETAIL
SCALE: 3" = 1'-0"

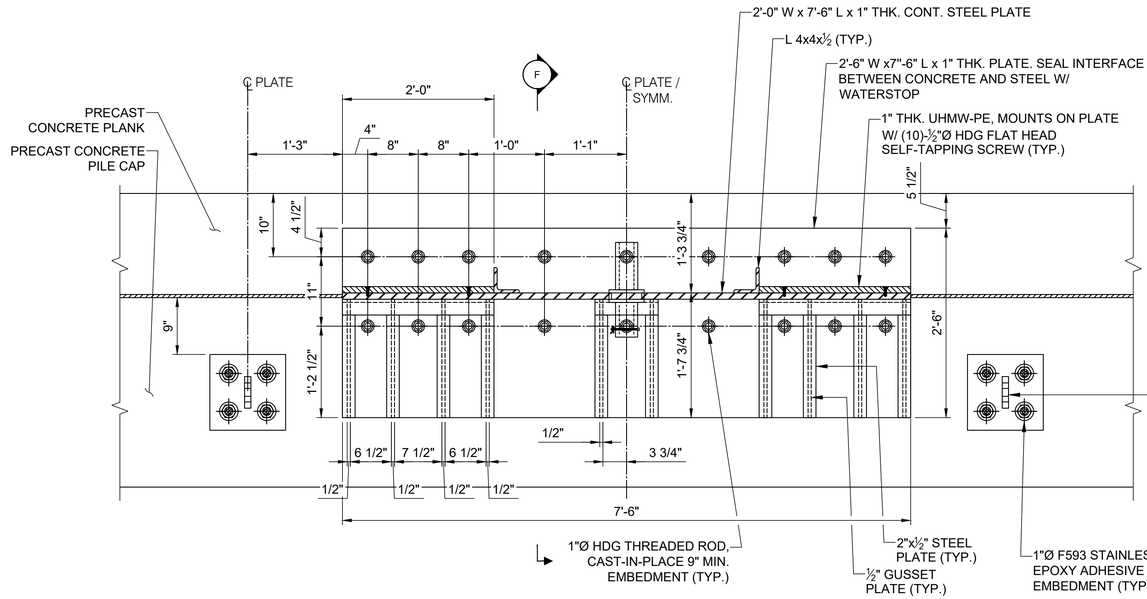

E FIFTH WHEEL ASSEMBLY - ELEVATION
SCALE: 1" = 1'-0"

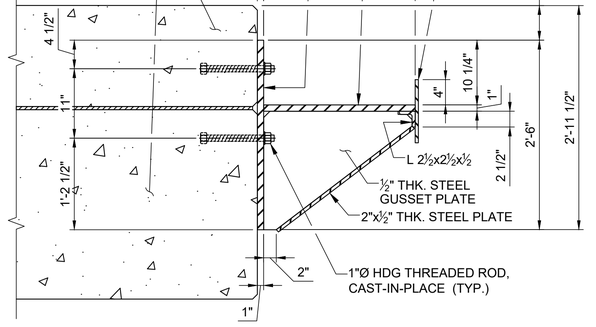

F FIFTH WHEEL ASSEMBLY - TYPICAL SECTION
SCALE: 1" = 1'-0"

ELEVATION	MLLW	NAVD88*
BFE	+19.0	+14.0
HAT	+11.6	+6.6
MHHW	+9.7	+4.7
MHW	+9.3	+4.3
MSL	+4.8	-0.2
MLW	+0.3	-4.7
MLLW	0.0	-5.0

*PROJECT DATUM

FOR PERMIT

Attention:
0 1"
If this scale bar does not measure 1" then drawing is not original scale.

STATE OF MAINE
DANIEL J. BANNON
No. 13033
LICENSED
PROFESSIONAL ENGINEER
April 22, 2024

Designed:	DJB
Drawn:	JAM
Checked:	BJB
Approved:	BMM
P.E. No:	13033
GEI Project	2203703

GEI Consultants
GEI CONSULTANTS, INC.
5 MILK STREET
PORTLAND, ME 04101
(207)797-8901

UNE
UNIVERSITY OF NEW ENGLAND
11 HILLS BEACH RD.
BIDDEFORD, MAINE

UNIVERSITY OF NEW ENGLAND MARINE SCIENCE CENTER PIER
11 HILLS BEACH ROAD
BIDDEFORD, YORK COUNTY, MAINE

NO	DATE	ISSUE/REVISION	APP
4	9/14/2023	DEP PERMIT SET	DJB
3	6/28/2023	75% DESIGN SUBMISSION	DJB
2	2/15/2023	30% DESIGN SUBMISSION	DJB
1	12/9/2022	15% DESIGN SUBMISSIONREV	DJB
0	11/11/2022	15% DESIGN SUBMISSION	DJB

SHEET NAME
MISCELLANEOUS DETAILS (4 OF 5)

SHEET NO.
S-012

MORICI, ANTHONY \\bos1v-fs02\Data_Storage\Working\UNIVERSITY OF NEW ENGLAND\2203703 UNE Marine Science Center Pier\00_CAD\Design\Sheets\2203703-S-012.dwg - 9/14/2023

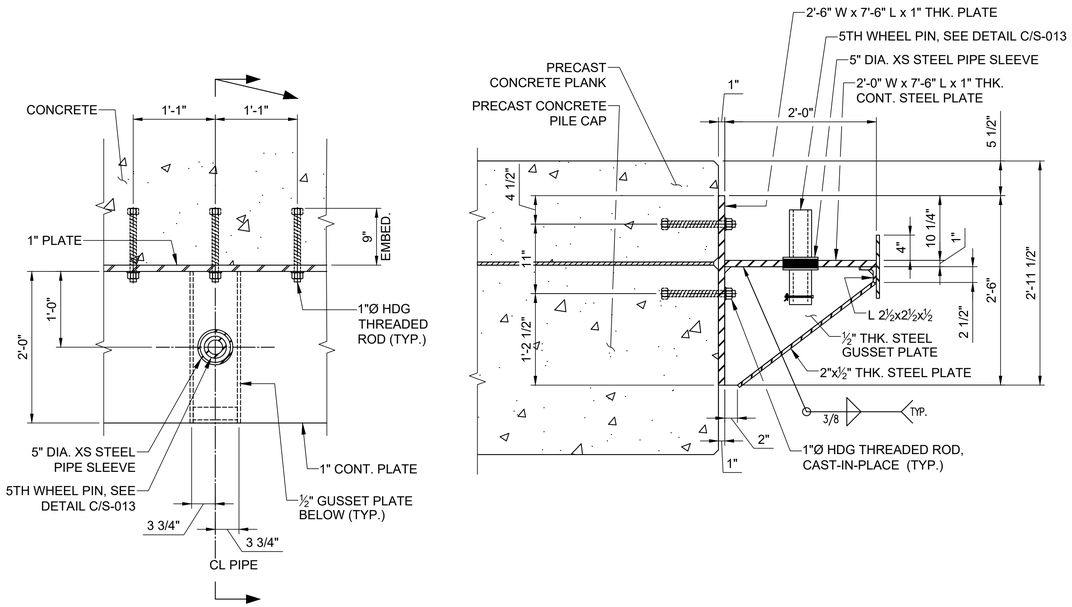

A TYPICAL 5TH WHEEL PLAN AND SECTION

SCALE: 1" = 1'-0"

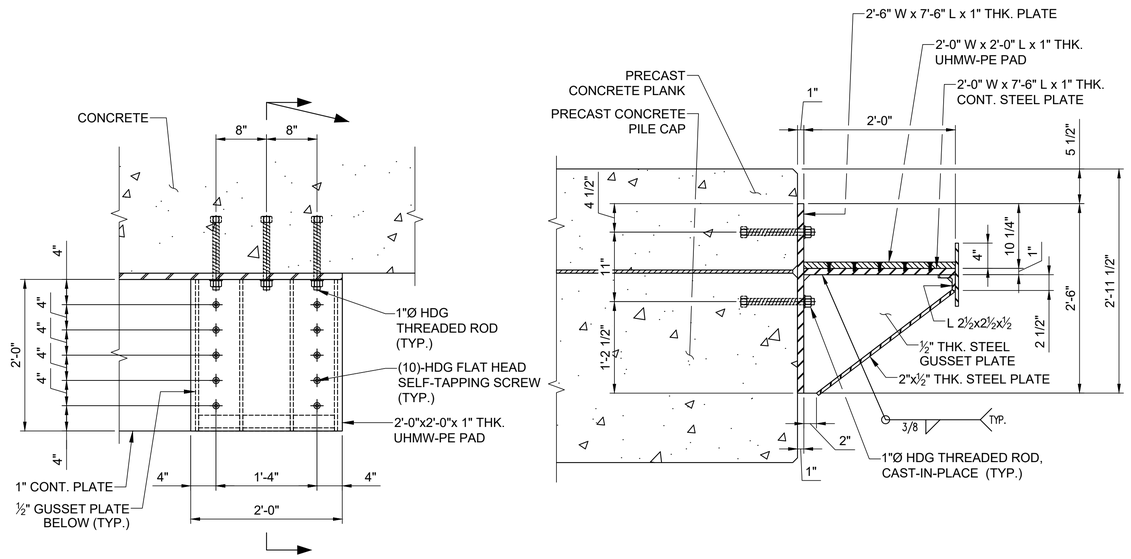

B TYPICAL UHMW-PE PAD DETAIL

SCALE: 1" = 1'-0"

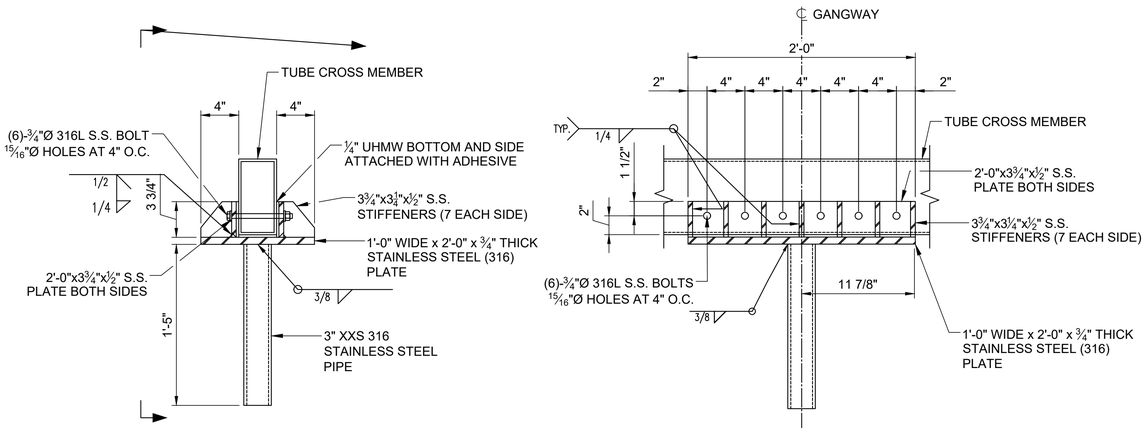

C 5TH WHEEL PIN DETAIL

SCALE: 1-1/2" = 1'-0"

ELEVATION	MLLW	NAVD88*
BFE	+19.0	+14.0
HAT	+11.6	+6.6
MHHW	+9.7	+4.7
MHW	+9.3	+4.3
MSL	+4.8	-0.2
MLW	+0.3	-4.7
MLLW	0.0	-5.0

*PROJECT DATUM

Attention:

0 1"

If this scale bar does not measure 1" then drawing is not original scale.

STATE OF MAINE
DANIEL J. BANNON
No. 13033
LICENSED PROFESSIONAL ENGINEER
April 22, 2024

Designed:	DJB
Drawn:	JAM
Checked:	BJB
Approved:	BMM
P.E. No:	13033
GEI Project	2203703

GEI Consultants
GEI CONSULTANTS, INC.
5 MILK STREET
PORTLAND, ME 04101
(207)797-8901

UNE
UNIVERSITY OF NEW ENGLAND

11 HILLS BEACH RD.
BIDDEFORD, MAINE

UNIVERSITY OF NEW ENGLAND MARINE SCIENCE CENTER PIER

11 HILLS BEACH ROAD
BIDDEFORD, YORK COUNTY, MAINE

NO	DATE	ISSUE/REVISION	APP
4	9/14/2023	DEP PERMIT SET	DJB
3	6/28/2023	75% DESIGN SUBMISSION	DJB
2	2/15/2023	30% DESIGN SUBMISSION	DJB
1	12/9/2022	15% DESIGN SUBMISSIONREV	DJB
0	11/11/2022	15% DESIGN SUBMISSION	DJB

SHEET NAME

MISCELLANEOUS DETAILS (5 OF 5)

SHEET NO.

S-013

FOR PERMIT

MCRICI, ANTHONY \\bos1vlsi02\Data_Storage\Working\UNIVERSITY OF NEW ENGLAND\2203703 UNE Marine Science Center Pier\00_CAD\Design\Sheets\2203703-S-013.dwg - 9/14/2023

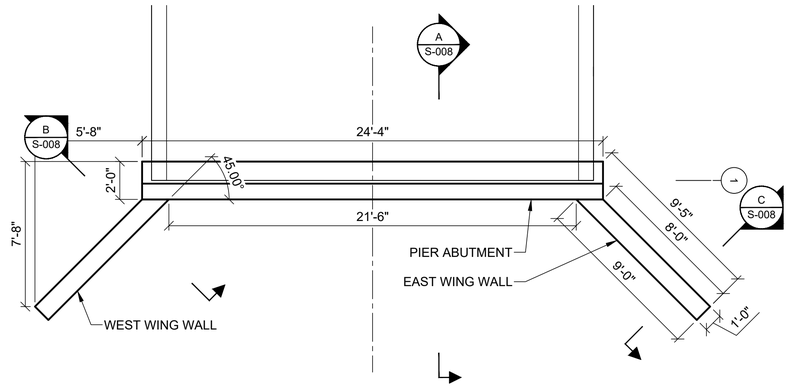

ABUTMENT PLAN

SCALE: SCALE: 3" = 1'-0"

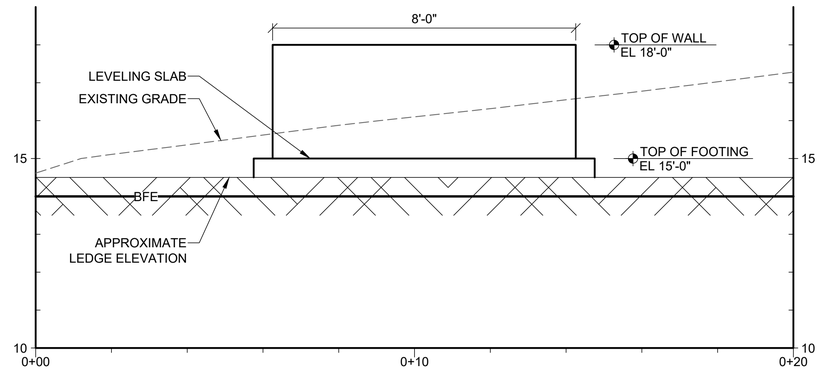

WEST WING WALL ELEVATION

SCALE: 6" = 1'-0"

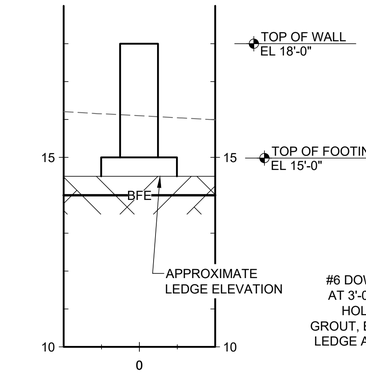

B WEST WING WALL SECTION

SCALE: 6" = 1'-0"

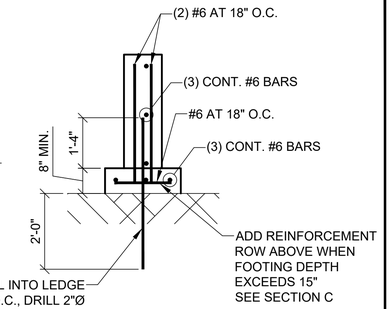

B SECTION

WEST WING WALL REINFORCEMENT

SCALE: 6" = 1'-0"

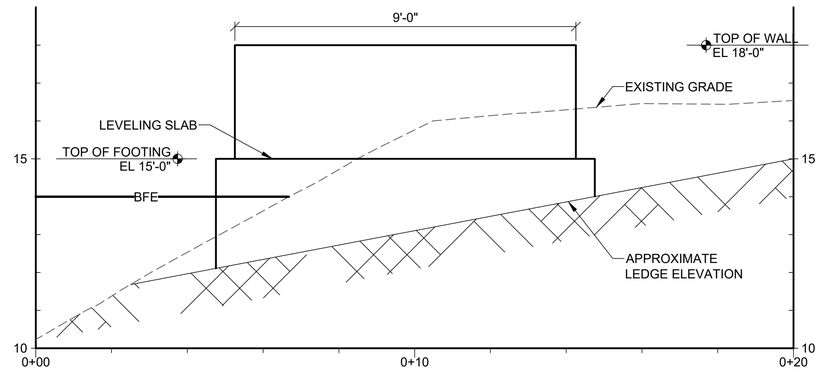

EAST WING WALL ELEVATION

SCALE: 6" = 1'-0"

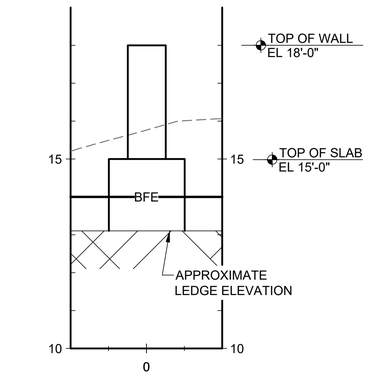

C EAST WING WALL SECTION

SCALE: 6" = 1'-0"

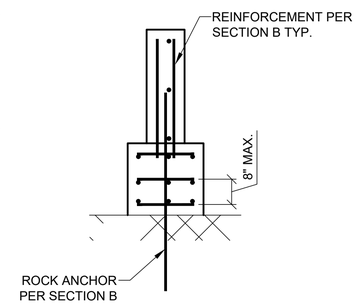

C SECTION

EAST WING WALL REINFORCEMENT

SCALE: 6" = 1'-0"

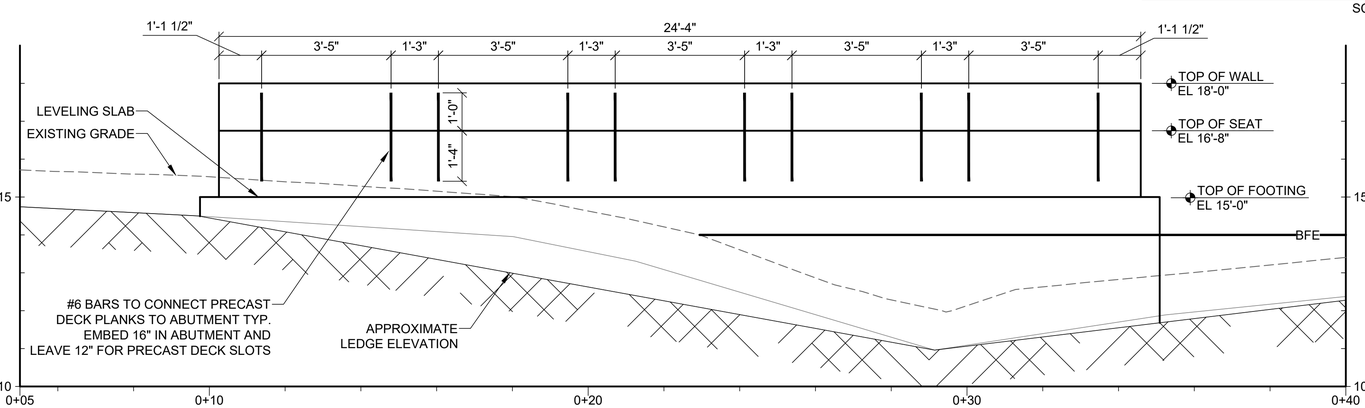

ABUTMENT ELEVATION A

SCALE: 3" = 1'-0"

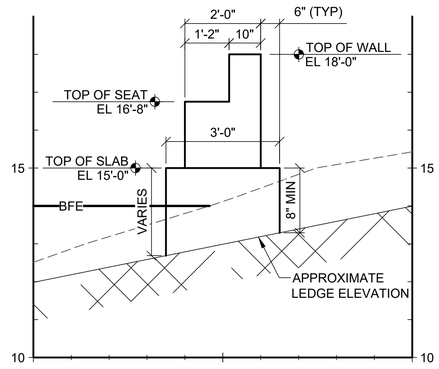

A ABUTMENT SECTION

SCALE: 6" = 1'-0"

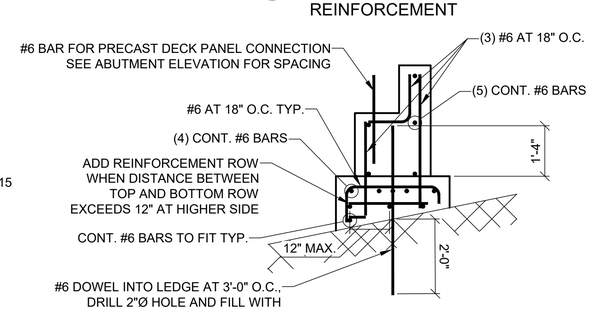

A SECTION

ABUTMENT REINFORCEMENT

SCALE: 6" = 1'-0"

FOR PERMIT

ELEVATION	MLLW	NAVD88*
BFE	+19.0	+14.0
HAT	+11.6	+6.6
MHHW	+9.7	+4.7
MHW	+9.3	+4.3
MSL	+4.8	-0.2
MLW	+0.3	-4.7
MLLW	0.0	-5.0

*PROJECT DATUM

Attention:

0 1"

If this scale bar does not measure 1" then drawing is not original scale.

STATE OF MAINE
DANIEL J. BANNON
No. 13033
LICENSED PROFESSIONAL ENGINEER

April 22, 2024

Designed:	DJB
Drawn:	JAM
Checked:	BJB
Approved:	BMM
P.E. No:	13033
GEI Project	2203703

GEI Consultants
GEI CONSULTANTS, INC.
5 MILK STREET
PORTLAND, ME 04101
(207)797-8901

UNIVERSITY OF NEW ENGLAND

11 HILLS BEACH RD.
BIDDEFORD, MAINE

UNIVERSITY OF NEW ENGLAND MARINE SCIENCE CENTER PIER

11 HILLS BEACH ROAD
BIDDEFORD, YORK COUNTY, MAINE

NO	DATE	ISSUE/REVISION	APP
4	9/14/2023	DEP PERMIT SET	DJB
3	6/28/2023	75% DESIGN SUBMISSION	DJB
2	2/15/2023	30% DESIGN SUBMISSION	DJB
1	12/9/2022	15% DESIGN SUBMISSIONREV	DJB
0	11/11/2022	15% DESIGN SUBMISSION	DJB

SHEET NAME

ABUTMENT DETAILS

SHEET NO.

S-014

MORICI, ANTHONY \\ost1-fs02\Data_Storage\Working\UNIVERSITY OF NEW ENGLAND\2203703 UNE Marine Science Center Pier\00_CAD\Design\Sheets\2203703-S-014.dwg - 9/14/2023

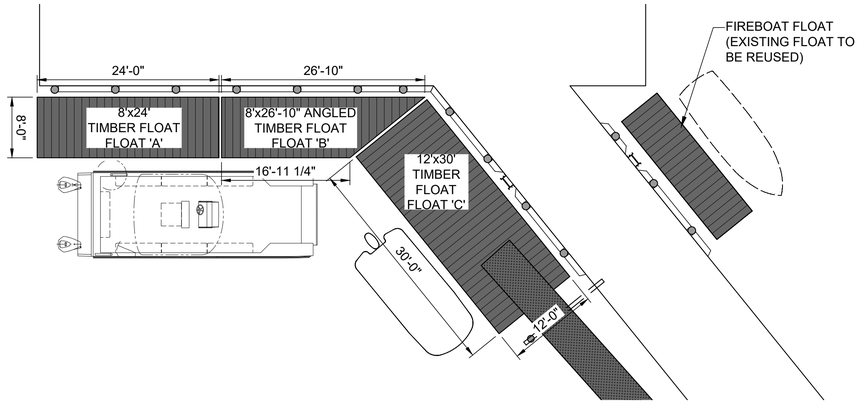

1 PLAN
FLOAT LAYOUT SCALE: 1" = 10'

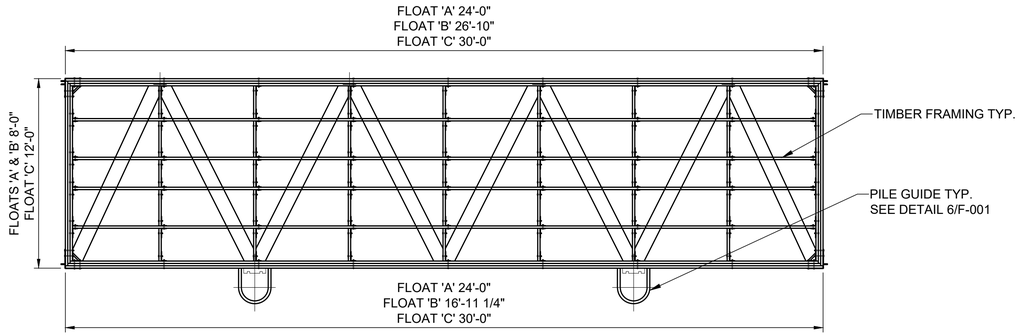

NOTES:
1. CONTRACTOR/FABRICATOR TO DETERMINE ACTUAL MEMBER SIZES PER LOADING REQUIREMENTS.

2 PLAN
TYP. FLOATING DOCK SCALE: 1" = 4'

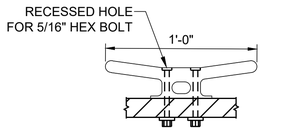

CLEAT LAYOUT:
FLOAT 'A' (4) @ EQ. SP ON SOUTH FACE
FLOAT 'B' (3) @ EQ. SP ON SOUTH FACE
FLOAT 'C' (4) @ EQ. SP ON WEST FACE

4 DETAIL
12" CLEAT SCALE: 2:1

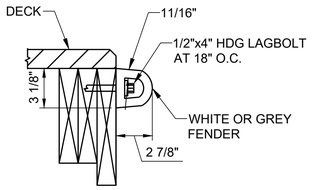

5 DETAIL
DOCK FENDER SCALE: 2:1

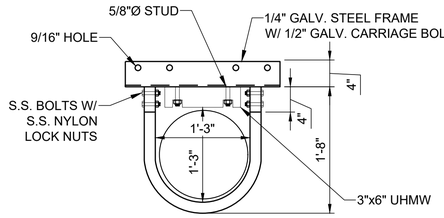

PILE GUIDE LAYOUT:
PROVIDE PILE GUIDES AT ALL TIMBER PILE LOCATIONS
FLOAT 'A' (3) REQ
FLOAT 'B' (4) REQ
FLOAT 'C' (4) REQ

6 DETAIL
PILE GUIDE SCALE: 1:1

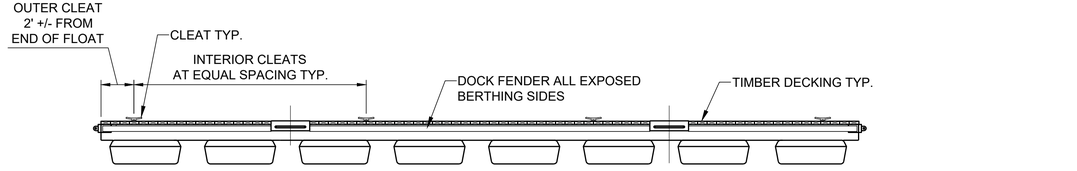

NOTES:
1. FLOTATION UNITS SHOWN ARE FOR GRAPHIC REPRESENTATION ONLY, CONTRACTOR/MANUFACTURER SHALL DETERMINE SIZE AND QUANTITY PER LOADING REQUIREMENTS.

3 ELEVATION
TYP. FLOATING DOCK SCALE: 1" = 4'

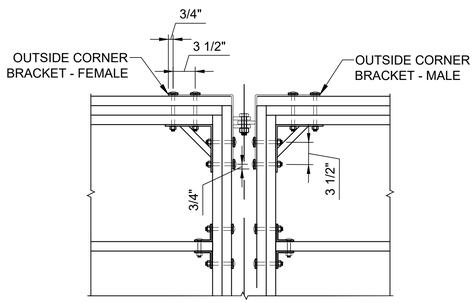

7 DETAIL
FLOAT CONNECTION SCALE: 1:1

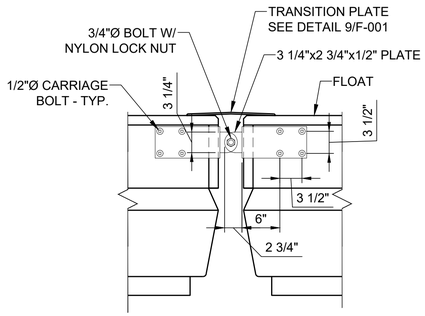

8 SECTION
FLOAT CONNECTION SCALE: 1:1

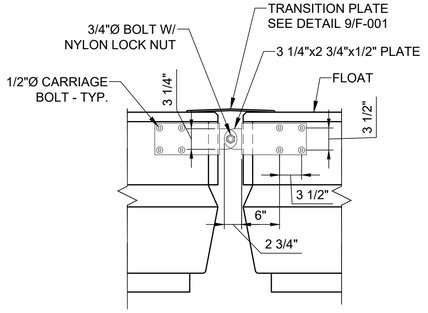

9 DETAIL
TRANSITION PLATE SCALE: 1:1

0 10 20
SCALE, FEET

0 1 2 4
SCALE, FEET

0 40 80
SCALE, FEET

ELEVATION	MLLW	NAVD88*
BFE	+19.0	+14.0
HAT	+11.6	+6.6
MHHW	+9.7	+4.7
MHW	+9.3	+4.3
MSL	+4.8	-0.2
MLW	+0.3	-4.7
MLLW	0.0	-5.0

*PROJECT DATUM

FOR PERMIT

Attention:
0 1"
If this scale bar does not measure 1" then drawing is not original scale.

STATE OF MAINE
DANIEL J. BANNON
No. 13033
LICENSED PROFESSIONAL ENGINEER
April 22, 2024

Designed:	DJB
Drawn:	JAM
Checked:	BJB
Approved:	BMM
P.E. No:	13033
GEI Project	2203703

GEI Consultants
GEI CONSULTANTS, INC.
5 MILK STREET
PORTLAND, ME 04101
(207)797-8901

UNE
UNIVERSITY OF NEW ENGLAND
11 HILLS BEACH RD.
BIDDEFORD, MAINE

UNIVERSITY OF NEW ENGLAND MARINE SCIENCE CENTER PIER
11 HILLS BEACH ROAD
BIDDEFORD, YORK COUNTY, MAINE

NO	DATE	ISSUE/REVISION	APP
4	9/14/2023	DEP PERMIT SET	DJB
3	6/28/2023	75% DESIGN SUBMISSION	DJB
2	2/15/2023	30% DESIGN SUBMISSION	DJB
1	12/9/2022	15% DESIGN SUBMISSIONREV	DJB
0	11/11/2022	15% DESIGN SUBMISSION	DJB

SHEET NAME
FLOAT PLAN AND DETAILS

SHEET NO.
F-001

M:\RIC_ANTHONY \\geiconsultants.com\data\Data_Storage\Working\UNIVERSITY OF NEW ENGLAND\2203703 UNE Marine Science Center Pier\00_CAD\Design\Sheets\2203703-F-001.dwg - 9/14/2023

CITY OF BIDDEFORD - SITE PLAN & SUBDIVISION APPLICATION DRAWING CHECKLIST *LAST REVISED: 11/26/2024*

CHECKLIST DIRECTIONS:

1. The following checklist must be completely filled out by the applicant and included on all preliminary and final Site Plan & Subdivision submittals. No checklist is required for sketch submittals.
2. Applicant to confirm all of the items listed are included within the submittal. Any missing items must have adequate reasoning to justify their absence.
3. City to review applicant's submittal and checklist responses. Projects missing substantial submittal information with non-acceptable reasoning will be rejected and required to resubmit.
4. Items in **BLACK** are required for 'Preliminary' approval & 'Final' approval.
5. Items in **BLUE** are only required for 'Final' approval.

SUBMITTAL INFORMATION - TO BE FILLED OUT BY APPLICANT	
Project Name:	University of New England (UNE) Marine Science Center Research Pier
Planning Board # (if available):	2024.34
Applicant Name/Info:	University of New England
Submittal #/Type (Prelim/Final):	Preliminary
Submittal Date:	6/10/2025

SUBMITTAL REQUIREMENT		APPLICANT RESPONSE			CITY REVIEW RESPONSE	
ITEM NUMBER	DESCRIPTION	INFORMATION PROVIDED (YES/NO)	LIST DRAWING SHEET NUMBER WHERE INFORMATION IS PROVIDED	REASON NOT PROVIDED/COMMENT	ACCEPTABLE (YES/NO-REVISE & RESUBMIT)	COMMENT
1	**GENERAL PLAN REQUIREMENTS**	YES				
A	Drawing specific legends (linetypes, hatches, etc.)	YES	C-001, C-002			
B	Individual drawing layer control should be utilized: freeze/thawing, changing lineweights, and screening (i.e. screen existing layers on a proposed plan, freeze topography and underground utilities on a proposed site plan)	YES	ALL			
C	North arrows, standard engineering scale viewports, scale bars, dated revision blocks	YES	ALL			
D	All drawings and surveys must be in the following coordinate systems: NAD83 Maine State Plane West (Horizontal) and NAVD88 (Vertical)	YES	ALL			
E	Drawings need to be designed, signed & sealed by a Maine licensed professional engineer (PE); all boundary survey data needs to be performed by a licensed professional land surveyor (PLS)	YES	ALL			
2	**COVER SHEET**	YES				
A	Project Name & Property Address	YES	G-001			
B	Project Team Contact Information (Owner, Engineer, Contractor, etc.)	YES	G-001, G-002	Contractor contact info to be added at a later date		
C	Site Location Map	YES	G-001			
D	Sheet Set List of Drawings	YES	G-001			
E	Tax Map and Lot ID	YES	C-001			
F	Zoning & Shoreland Zone Information	YES	C-001			
G	Existing Use Description	YES	C-001			
H	Proposed Use Description	YES	C-003			
I	Required Waiver/Variances (Yes/No); if yes, plan must clearly list waivers/variances requesting	YES	G-001			
J	Name of Drainage Watershed	YES	C-001			
K	Within the MS4 Urbanized Area (Yes/No)	YES	C-001			
L	Natural resources (streams, wetlands, etc.) located on-site or adjacent to the property (Yes/No)	YES	C-001			
M	Within the 100-year Flood Zone (Yes/No)	YES	C-001			
N	Public Road Proposed (Yes/No)	NO	N/A	There are no public roads onsite.		
O	Private Road Proposed (Yes/No)	YES	C-001			
P	Public Sewer Connection (Yes/No)	YES	C-001	There are no proposed improvements to the public sewer		
Q	Public Storm Drain Connection (Yes/No)	NO	N/A	There are no public storm drains onsite.		
R	Limits of Disturbance in square feet and acres	YES	C-005			
S	Pervious Land Cover square footage, existing and proposed	YES	C-003			
T	Impervious Land Cover square footage (Pavement/Gravel), existing and proposed	YES	C-003			
U	Building Roof square footage, existing and proposed	YES	C-001			
V	Assigned Planning Board Number	YES	G-001			
W	Estimated cut/fill earthwork volumes. If disturbing within the Flood Zone, a separate set of earthwork volumes required (overall site vs. within flood zone)	YES	C-007, C-007			
3	**EXISTING CONDITIONS PLAN**					
A	Horizontal & Vertical Datums annotated (NAD83 & NAVD88)	YES	C-001			
B	Property & Right-of-Way Lines	YES	C-001			
C	Boundary line information (bearings, distances, etc.)	YES	C-001			
D	Property pin and monumentation locations	YES	C-001			
E	Existing easements with proper ownership identified	YES	C-001			
F	Road Names & Individual Lot Labels (Map, Lot, Owner, Acreage)	YES	C-001			
G	Location of any Natural Resources and their respective buffers (wetlands, streams, etc.)	YES	C-001			
H	100-year Flood Zone Limits & Elevation	YES	C-001			
I	Existing contours with adequate contour labelling; minimum 1' contour interval	YES	C-001			
J	Existing building FFEs annotated	YES	C-001			
K	Spot elevations for all tie-in locations (curb cuts, property line)	YES	C-001			
L	Existing buildings & structures	YES	C-001			
M	Existing pavement areas & number of parking spaces	YES	C-001			
N	Existing ADA ramp geometry, detectable warning plates, and ADA parking spaces	YES	C-001			
O	Existing site features (sidewalks, retaining walls, curbing, lightpoles, guide rails, dumpsters, fencing)	YES	C-001			
P	Existing signage and striping	YES	C-001			
Q	Existing underground utility locations (storm, sewer, force main, water, gas, elec, tele)	YES	C-001			
R	Existing above-ground utility locations (manholes, catch basins, utility poles, hydrants, transformers, riprap)	YES	C-001			
S	Rim, invert in, invert out, pipe size, cardinal direction (N, E, S, W) information for any existing utility infrastructure being tied into (upstream/downstream/outfalls)	YES	C-001			
T	Existing tree lines, street trees, free-standing trees (12" or larger diameter at breast height), and vegetation	YES	C-001			
U	Location of any borings, drinking wells, and monitoring wells	YES	C-001			
4	**SITE DEMOLITION & EROSION CONTROL (E&SC) PLAN**					
A	Limits-of-disturbance outlined and acreage annotated	YES	C-005			
B	Location of any Natural Resources and their respective buffers (wetlands, streams, etc.)	YES	C-001			
C	100-year Flood Zone Limits	YES	C-001			
D	Callout existing site features to be demolished/removed/replaced	YES	C-002			
E	Callout existing utilities to be demolished/removed/abandoned-in-place	YES	C-002			
F	Hatch existing buildings and pavement to be removed	YES	C-002			
G	Construction Entrance location(s)	YES	C-005			
H	Perimeter E&SC control location(s) (i.e. silt fence, erosion berm mix)	YES	C-005			
I	Stockpile and staging area(s) identified (with proper perimeter control)	YES	C-005			
J	Inlet protection location(s)	YES	C-005			
K	Note requiring contractor to implement dust control measures throughout construction	YES	C-012			
L	Note requiring contractor to pave utility trenches within right-of-way within 3 days of excavation or prior to any rain event	N/A	N/A	No utilties proposed within right-of-way		
M	If groundwater expected, show dewatering/silt bag location(s); show temporary pumping routing	YES	C-014			

N	If large development is proposed with an extensive underground stormwater conveyance network, identify how SWM infrastructure and BMPs will be protected during construction and if sediment traps/basins are needed	N/A		No extensive underground SWM infrastructure is proposed.		
5	**SITE PLAN/SUBDIVISION PLAN**	YES				
A	Partial Site Plans needed for any viewport scale greater than 1"=20'	YES	C-003			
B	Existing property and right-of-way lines	YES	C-003			
C	Proposed subdivision lot lines and labels	YES	C-003			
D	Required Zoning Setbacks shown with dimensions and annotation	YES	C-003			
E	Bulk requirement summary table (zoning/parking calculations)	YES	C-003			
F	Location of any Natural Resources and their respective buffers (wetlands, streams, etc.)	YES	C-003			
G	100-year Flood Zone Limits	YES	C-003			
H	Proposed building outlines, door entrances and loading docks	YES	C-003			
I	Proposed building labels	YES	C-003			
J	Proposed road & sidewalk extents; provide clear annotation if roads will be public or private	YES	C-003			
K	Proposed parking and accessible parking locations; annotate parking space counts	YES	C-003			
L	Proposed signage, parking striping, and traffic striping	YES	C-003			
M	Detailed ADA ramp geometry, detectable warning surfaces, and ADA parking striping/signage; existing & proposed	NO		No ADA ramps or parking are proposed		
N	Proposed site features (i.e. curbing, walls, fencing, guiderail, fire hydrant, transformers, light pole locations)	YES	C-003, C-004, C-006, C-007			
O	Proposed landscaping; detailed landscaping design should be shown on separate plans	YES	C-015, C-016			
P	Designated snow storage areas	NO		No snow storage areas are proposed		
Q	Proposed dumpster locations and trash removal access	NO		No dumpsters or trash removal are proposed.		
R	Linear dimensions of all drive aisles, sidewalk widths, parking spaces, loading docks	YES	C-003, C-006, C-007			
S	Radial dimensions for all curbs, landscaped islands, sidewalks	YES	C-003			
T	Public/private road centerline stationing shown, labelled every 0+50' with curve data	YES	C-003, C-006, C-007			
U	If Private Road is proposed, final recorded plans must clearly note that proposed private roads will not be submitted in the future for public acceptance	NO		Will be provided at a later date		
V	If Private Road is proposed, final recorded plans must clearly note that the City is not responsible for any maintenance, repair, plowing, or trash removal of proposed private roads	NO		Will be provided at a later date		
W	Planning Board signature block for final recording	YES	G-001			
6	**GRADING PLAN**	YES				
A	Partial Grading Plans needed for any viewport greater than 1"=20'	YES	C-004, C-006, C-007			
B	Limits-of-disturbance outlined and acreage annotated	YES	C-004, C-006, C-007			
C	Proposed Building Labels with Individual Finished Floor Elevations (FFEs)	YES	C-004, C-006, C-007			
D	Existing contours with adequate contour labelling, screened; minimum 1' contour interval	YES	C-004, C-006, C-007			
E	Proposed contours with adequate contour labelling; minimum 1' contour interval	YES	C-004, C-006, C-007			
F	Detailed grading for all ditches, swales, outfalls, and riprap	YES	C-004, C-006, C-007			
G	All proposed contours tie-into existing contours at limits-of-disturbance outline	YES	C-004, C-006, C-007			
H	Existing spot elevations for all asphalt, curb, and SWM BMP tie-in locations	YES	C-004, C-006, C-007			
I	Location of any Natural Resources and their respective buffers (wetlands, streams, etc.)	YES	C-004, C-006, C-007			
J	100-year Flood Zone Limits	YES	C-004, C-006, C-007			
K	Proposed spot elevations for all important roadway geometric points (including but not limited to: parking/drive aisles, building corners/entrances, retaining walls, loading docks, EOP/curblines)	YES	C-004, C-006, C-007			
L	Proposed spot elevations for all ADA ramp/landing/parking stall geometry points	N/A	No new ADA proposed			
M	Proposed % slope arrows for all ADA parking spaces and sidewalks	N/A	No new parking proposed			
N	Proposed longitudinal % slope arrows for drainage ditch centerlines	YES	C-004, C-006, C-007			
O	Proposed % slope arrows for roads, parking areas, and landscape tie-in areas	YES	C-004, C-006, C-007			
P	Estimated cut/fill earthwork volumes. If disturbing within the Flood Zone, a separate set of earthwork volumes required (overall site vs. within flood zone)	YES	C-004, C-006, C-007			
7	**ROAD PROFILES (if public/private road proposed)**	YES				
A	Existing surface; dashed and screened	YES	C-006, C-007			
B	Proposed surface; continuous and bold	YES	C-006, C-007			
C	Road design speed must be clearly identified	YES	C-006, C-007			
D	Corresponding centerline stationing and curve data annotation	YES	C-006, C-007			
E	All vertical curves must identify the proposed 'K' values and confirm they meet the minimum design speed thresholds listed in AASHTO's Green Book Tables 3-35 & 3-37	YES	C-006, C-007			
F	Clear annotation if proposed road will be public or private	YES	C-006, C-007			
G	If Private Road is proposed, plans must clearly note that proposed private roads will not be submitted in the future for public acceptance	YES	C-003			
H	If Private Road is proposed, plans must clearly note that the City is not responsible for any maintenance, repair, plowing, or trash removal of proposed private roads	YES	C-003			
8	**UTILITY PLAN**					
A	Existing underground utility locations; screened (storm, sewer, force main, water, gas, electric, telecom)	YES	C-004			
B	Existing above-ground utility locations; screened (manholes, catch basins, utility poles, hydrants, riprap)	YES	C-004			
C	Rim, invert in, invert out, pipe size, cardinal direction (N, E, S, W) information for any existing utility infrastructure being tied into (upstream/downstream/outfalls)	YES	C-004			
D	Proposed underground utility locations; bold (storm, sewer, force main, water, gas, electric, telecom, lighting)	YES	C-004, ES1.1			
E	Proposed above-ground utility locations; bold (manholes, catch basins, utility poles, hydrants, transformers, riprap)	YES	C-004			
F	Proposed storm culverts, outfalls, and riprap locations and sizes	YES	C-004 to C-007			
G	Storm/sewer structure labels must include: rim, inverts in, inverts out, pipe sizes, cardinal directions (N, E, S, W)	YES	C-004 to C-007			
H	Storm/sewer pipe labels must include: linear footage, pipe size, material, slope	YES	C-004 to C-007	Additional information can be found in the SWM Report		
I	Flow directional arrows for storm & sewer pipes	YES	C-004 to C-007			
J	Proposed & existing site features shown that could conflict with proposed utilities (trees, signs, lightpoles, bollards, foundations, guiderails)	YES	C-004 to C-007			
K	All storm drains must be sized to convey the 25-year storm	YES	C-004 to C-007	See SWM Report		
L	Sewer force main sizes and invert elevations	NO	N/A	No force main proposed		
M	Sewer pump station locations, model, rim, inverts, pipe sizes, cardinal directions (N,E,S,W); additional details and hydraulic calculations required for any Public pump station proposed.	NO	N/A	No pump stations proposed		
N	Locations, sizes, and elevations of any: grease traps, oil-water separators, septic systems, drinking wells	NO	N/A	None proposed		
O	Proposed water sizes labelled	NO	N/A	None Proposed		
9	**UTILITY PROFILES**					

A	Utility profiles required for **all** gravity storm drain and sewer pipes proposed: within the right-of-way, within private or public roads, for non-driveway culverts, and for any public infrastructure tie-ins	NO	N/A	No utilties proposed in ROW		
B	Existing surface; dashed and screened	NO	N/A	No utilties proposed in ROW		
C	Proposed surface; continuous and bold	NO	N/A	No utilties proposed in ROW		
D	Storm/sewer structure labels must include: rim, inverts in, inverts out, pipe sizes, cardinal directions (N, E, S, W)	NO	N/A	No utilties proposed in ROW		
E	Storm/sewer pipe labels must include: linear footage, pipe size, material, slope	NO	N/A	No utilties proposed in ROW		
F	Existing and proposed gravity pipe crossings shown; sizes labelled and depths/clearance annotated	NO	N/A	No pipe crossing proposed		
G	Existing and proposed electric/water/telecom/gas crossings shown at approximate depths; sizes labelled and depths/clearance annotated	YES	ES1.1			
10	**DETAILS**					
A	Road section detail, including pavement/gravel depths & cross slopes	YES	C-008, C-009, C-010			
B	Sidewalk, paver, crosswalk, and any other pavement section details	N/A	None proposed			
C	Pavement sawcut & shiplap details	YES	C-003, C-006, C-007			
D	Utility trench/backfill detail	YES	C-011			
E	All site feature details; curbing, retaining walls, fencing, guiderails, dumpsters, etc.	YES	C-011, C-013, C-014			
F	Signage, striping, and ADA details	N/A	N/A	No signage or striping proposed		
G	E&S notes and details	YES	C-012, C-013, C-014			
H	Utility structure details (manholes, cleanouts, fittings, handholes, transformer pads, hydrants)	YES	C-013, C-014			
I	Storm outfall & riprap details	YES	C-011			
J	Drainage ditch cross section identifying minimum depth, minimum bed width, and maximum side slopes	NO	C-013, C-014			
K	Pump station, grease trap, oil-water separator, septic, drinking well details	N/A	N/A	None Proposed		
L	Conduit section details	N/A	N/A	None Proposed		
11	**LANDSCAPING, LIGHTING & PHOTOMETRIC PLANS**					
A	As required by ordinance; at a minimum: locations, counts, lighting models, and landscaping species must be identified	YES	C-015, C-016, ES1.1			
B	Landscaping & lighting details	YES	C-015, C-016, ES1.1			
12	**DOCUMENTS/REPORTS/CALCULATIONS**					
A	On initial preliminary submittal applications, applicant must submit a development review and inspection fee. Applicant to coordinate fee amount with City Planner prior to submittal. This fee will be drawn against to cover the following type of services throughout the project life cycle (and may require replenishing): i. 3rd Party City Peer-Review ii. Site Inspections during the permitting process iii. Erosion & Sediment Control Inspections during construction iv. Right-of-Way Inspections during construction v. Site Punchlist/As-Built Inspections post-construction	Yes				
B	Stormwater Management Report, including: 1. Predevelopment & Post-development Drainage Area Maps, including: a. Subdrainage areas delineated and labeled b. Points of Interest/Analysis shown and labeled c. Hatching for different land cover areas (impervious, pervious, gravel) within each applicable USDA soil boundary d. Time of concentration (Tc) paths & durations e. Four City-standardized stormwater summary tables 2. If any SWM water quality BMP or detention facility is proposed, hydrologic model exports/hydrographs must be submitted for the for the 2, 10, 25, & 100-year storm frequencies 3. Sizing calculations for any SWM water quality BMP or detention facility 4. A stormwater maintenance manual for any proposed SWM water quality BMP or detention facility, including: a. Annual maintenance requirements b. Annual inspection requirements by a licensed PE; noting that all inspection reports/logs need to be submitted to the Engineering Department by March 1st each following year, identifying what on-going maintenance has occurred and what remedial repairs are needed c. Signed Property Owner Agreement: including the current property owner's contact information and signature; it must be noted that all stormwater BMP maintenance requirements are linked to the property for perpetuity and transfer to any new ownership	Yes				
C	An approved 'Sewer Ability-to-Serve Letter' from the Engineering Department: i. Applicant to submit proposed sewer flow calculations per Maine's Subsurface Wastewater Disposal Rules, Chapter 241, Section 4 (Tables 4A & 4C)	N/A		No new buildings/sewer conveyance proposed		
D	A Performance Guarantee Cost Estimate utilizing Planning's template	YES				
E	For any Site Location of Development (SLODA) project, the applicant's submittal must mimic a formal submittal to DEP. Submit must abide to DEP's SLODA application and include DEP's SLODA Submittal Checklist (Form D)	YES				
F	25-year hydraulic calculations for all storm conveyance infrastructure (pipes, culverts, drainage ditches); starting tailwater conditions/documentation must be clearly identified	YES				
K	Public sewer pump station sizing calculations and maintenance plan	N/A	No pump stations proposed	No pump stations proposed		
M	Grease trap sizing calculations	N/A	No grease traps proposed	No grease traps proposed		
N	Homeowner Association (HOA) agreement for any private road serving two (2) lots or more	N/A	No HOA	No HOA		
O	Summary list & copy of any required DOT/DEP/USACE permits & approvals	YES				

CITY OF BIDDEFORD, MAINE

SHORELAND AND SITE PLAN REVIEW APPLICATION

Project:
RESEARCH PIER

Applicant:

UNIVERSITY OF NEW ENGLAND
11 HILLS BEACH ROAD
BIDDEFORD, MAINE 04005

June 9, 2025

Prepared by:

Site Design Associates
23 Whitney Way
Topsham, Maine 04086
Ph: 207-449-4275
Email: info@sitedesignassociates.biz

Site Design Associates
Consulting Engineering and Land Planning

June 9, 2025

David Galbraith, City Planner
City of Biddeford
P.O. Box 586
205 Main Street
Biddeford, ME 04005

RE: University of New England
Proposed Research Pier

Dear David and Planning Board Members:

University of New England is pleased to submit the enclosed application for site plan review and shoreland permits for a proposed research pier and floats at 11 Hills Beach Road in Biddeford. Enclosed are 10 copies of the site plan, and the following information submitted electronically per the direction from your office:

- Letter responding to May 13, 2025 staff comments – Attachment A
- Letter responding to Planning Board Member Comments - Attachment B
- City Application
- Letter of Agent Authorization
- Site Plan Drawing Checklist
- Location Map
- Deed
- Letter of Financial Capacity
- Stormwater Management Report
- Alternatives Analysis and Memo
- ACOE, DEP, and SRCC Permits
- Letter from the Maine Historic Preservation Commission clearing the project
- Notice to Proceed with external reviews from the city
- Typical shed photo
- Light fixture cuts
- Drawing Set

We understand the application fee has been paid in full.

The project is located in the city Institutional (IN) zone and the Limited Residential District shoreland zone. The project was included on the most recent version of the city approved campus master plan.

The Biddeford Campus of the University of New England (UNE), Maine's largest private university, is positioned on the confluence of the Saco River and the Atlantic Ocean. This location, along with state-of-the-art research facilities and world-class faculty, has recently earned UNE's marine programs rankings among the top 10 nationally from *Biology Explorer*, *College Choice*, and *College Magazine*. To expand UNE's unique

experiential learning and research opportunities in the marine ecosphere, the University is proposing the construction of a permanent pier which will serve as a four-season research deployment facility directly adjacent to the Arthur P. Girard Marine Science Center (GMSC) on its Biddeford campus

UNE's School of Marine and Environmental Programs, housed in the GMSC, is the academic home of 325 undergraduate and graduate students who are studying marine science, marine policy and management, as well as a wide variety of interdisciplinary fields, including marine ecosystems, conservation, restoration, business, sustainable fisheries and ecological aquaculture, social-ecological systems, and marine sustainability science. Additionally, two programs provide pathways from undergraduate to graduate degrees in Marine Sciences and Maritime Law (a 3+3 partnership with Maine Law).

Three things distinguish UNE's marine programs. The first is the oceanfront location on its core undergraduate campus, which provides direct access to the Gulf of Maine. The second is the multitude of research opportunities available to students starting as early as their first year of undergraduate studies. And the third is how the marine research done by UNE students and faculty directly impacts the people of Maine and beyond.

However, all three of these key assets are limited by the lack of year-round access to the ocean. ***The planned pier will allow students and faculty to be on the water throughout the year, thereby greatly enhancing UNE's groundbreaking research into critical problems facing Maine.***

The jewel of UNE's marine programs is Ram Island, UNE's private one-acre living laboratory two miles from campus in Saco Bay, which was gifted to the University in 2014. The island, which houses a fieldwork station and an experimental kelp farm, provides unparalleled research and field study opportunities for students and faculty. It also creates the potential to develop research partnerships that focus on critical issues facing Maine, making Ram Island home to coastal zone investigations of climate change, marine geology, invasive species, marine mammal ecology and interactions with fisheries and marine aquaculture.

Despite its prime location with direct access to the ocean, UNE currently has floating docks that are removed seasonally, precluding access to Ram Island and other areas of the Gulf of Maine in the critical winter and spring months. Construction of a permanent pier at UNE's Girard Marine Science Center will allow for dynamic, year-round, ocean-going research activities, facilitating scientific and practical exchanges with local, regional, and national marine researchers and industry partners. Additionally, the deep-water access would expand UNE's ability to serve as a collaboration hub for coastal marine and deep-water science and industry. As good stewards of the environment and our coastal neighbors, UNE is committed to ensuring that the planned structure fully adheres to local, state, and federal regulations.

Investment in UNE's marine programs is good for Maine taxpayers. With the Gulf of Maine warming faster than almost any other body of water on the planet, marine research

afforded by year-round access to the water will allow UNE to gather critical data to guide Maine's response to climate change. These expanded research opportunities will likewise enhance UNE's ability to ensure that its students graduate with the curiosity and experience to both ask and answer the important questions that will inform to the data-driven decisions impacting the expanding fields of aquaculture, fisheries, marine law and policy, marine business and entrepreneurship, ocean food systems, and related fields.

In order to determine the optimum location for the pier, an extensive alternatives analysis and studies were undertaken. This was not only for due diligence, but was required by the state and federal regulators. The regulators concluded that this exhaustive analysis was satisfactory to establish the proposed pier location. A copy of the alternatives analysis is included as Attachment 8.

The proposed facility includes the following:

1. A pile supported pier structure extending from shore into the Saco River. The proposed pier includes an approximately 130-foot long approach section extending from shore and an 80-foot long pier head section oriented roughly parallel to the direction of flow in the river. The pier consists of a concrete superstructure on steel pipe piles, with timber fender piles for vessel berthing and floating docks, and a pile supported gangway lifting beam to allow the gangway ramp to be temporarily removed from the water.
2. A floating dock system consisting of one 8-foot by 24-foot float, one 8-foot by 26-foot 10-inch float, and one 12-foot by 30-foot gangway landing float to provide all-tide vessel access for UNE's vessels on the west side of the pier, and a single 6-foot by 20-foot floating dock to provide a tie-up location for the City of Biddeford Fire Boat on the east side of the pier.
3. An 80-foot by 5-foot gangway to provide ADA compliant access to the float system.
4. An upland access road connecting the existing road at the MSC to the proposed pier, including associated site grading, drainage, and stormwater management features.

The proposed activities are described in detail in the following sections.

Pier Structure

The proposed vehicle rated pier is supported by twenty-five concrete filled steel pipe piles and a concrete abutment which connects the pier to the proposed access road. All of the piles are located beyond the Highest Annual Tide (HAT) line, while the abutment is located shoreward of the HAT line. Fourteen, 24-inch diameter steel piles support the pier head portion of the structure and eleven, 16-inch diameter steel piles support the pier approach. The seven piles at the first three pile bents at the pier approach will be socketed to ledge due to a limited soil layer above the ledge surface at these locations. The remaining piles will be driven to ledge but do not require socketing given the sufficient

depth of overburden soils. The piles support precast concrete pile caps which support precast concrete deck planks that form the pier deck surface.

The pier includes thirty, 12-inch diameter timber fender piles to provide for vessel berthing at the main face of the pier and to restrain the floating dock system. All new fender piles will be untreated timber, greenheart species. A gangway lifting beam is proposed to lift the gangway out of the water during float maintenance or in advance of severe weather. The lifting beam is supported by a steel column anchored to the pier on one side and a 10.75-inch diameter concrete filled steel pipe pile on the other.

Floating Dock System

The proposed floating dock system includes four floating docks. The three timber floats on the west side of the pier are new, while the single float on the east side of the pier is an existing float that will be relocated from UNE's facility that is located upstream of the proposed pier (note that this facility is proposed to be demolished). The new floats consist of an 8-foot by 24-foot float, an 8-foot by 26-foot 10-inch angled float, and a 12-foot by 30-foot gangway landing float. All new floats will be located on the west side of the pier approach at the south side of the pier head. The existing float is 6-feet by 20-feet and will be located on the east side of the pier approach at the south side of the pier head to provide a tie-up location for the City of Biddeford Fire Boat. The new floats are accessed by the proposed gangway or a fixed ladder, and the fireboat float is accessed solely by a fixed ladder. All the floating docks are located beyond the MLLW line and will be restrained and guided by the timber fender piles. The floats will allow vessels to tie up to the pier at any time during the tide cycle. The depths of water at the floats are adequate to meet UNE's needs.

Gangway

The 80-foot by 5-foot gangway provides ADA compliant access to the new floating dock system on the west side of the pier. The gangway connects to the pier near the beginning of the pier approach and lands on the 12-foot by 30-foot floating dock. The total indirect impact from the gangway is 357 square feet (this area excludes the portion of the gangway located above the floating dock).

Pier Building

One pier building, an 8 ft x 10 ft shed, is proposed to be located at the southeast corner of the pier head. This structure will provide storage for small equipment used by MSC staff, as well as an indoor protected location to house certain utility features such as electrical service panels.

Access Drive

Vehicular and pedestrian access to the pier will be provided by a new 20 ft wide access road that will extend from the existing GMSC access road and parking area, around the east side of the GMSC building, and to the end of the pier approach. A turnaround area is

provided adjacent to the pier approach to allow for vehicles up to and including fire trucks accessing the pier to turn around and drive forward to exit the access road. There is no parking proposed adjacent to the pier. All vehicles will use the existing parking spaces adjacent to the GMSC building. The new road will provide construction access for the project, which will help to limit the amount of work performed from the water and allow more staging to be achieved from land. The upland work will include stormwater management features that have been designed to meet Maine DEP Chapter 500 standards.

The following addresses Site Plan Approval/ Site Design Criteria and Shoreland Zoning Land Use standards for piers.

Site Plan Approval/Site Design Criteria

1. **Drainage**

   A Stormwater Management Report is attached. The report submitted demonstrates compliance with Maine Department of Environmental Protection (DEP) Basic and General standards. The project will include bioretention filters designed to DEP BMP standards for enhancement of stormwater runoff quality.

   A waiver of Article XI.II.Section 5.B.1. is required for an increase in the rate of runoff. This waiver has historically been granted by the planning board for projects located on the UNE parcel that are directly tributary to tidal receiving waters, which will be the case for this project. There will be no impact on the capacity of a receiving downgradient storm system. The bioretention filters will provide stormwater quality enhancement and cooling of runoff, as well as a level of stormwater detention. Level spreaders will be utilized to evenly distribute runoff from the bioretention filters into sheet flow. Although an increase in the rate of runoff is shown at two point locations on the drainage plans, the reality is that the stormwater runoff from the subcatchments is distributed over a wide area. Note that the peer review engineer supports this waiver.

2. **Utilities**

   Power will be fed underground to the pier from the Girard Marine Science Center.

3. **Parking**

   There will be no formal dedicated parking associated with the project.

4. **Structural Layout and Design**

a) Design of Buildings

An 8 ft x 10 ft shed is proposed on the pier. A photo in attachment 12 shows a rendering of the shed; a wood frame structure, with weather resistant siding, and a metal roof.

b) Setbacks

The research pier is sited in conformance with all setback requirements.

c) Fire Protection & Safety

Based on input from the fire department, the road width was increased to 20 ft per NFPA standards. The turnaround meets the city required dimensional standards and has been modelled to accommodate fire apparatus.

d) Landscaping

The revegetation plan has been developed to meet the City of Biddeford's Shoreland Zoning requirements as well as to preserve a visual buffer for the access drive to minimize visibility from the water to the greatest extent possible, while achieving the required clearing and considering functional requirements such as snow plowing at the turnaround. The revegetation plan also meets requirements of the Saco River Corridor Commission (SRCC) who has issued a permit for the project.

Revegetation Plan

The revegetation plan, drawing C-15, is intended to meet the city of Biddeford's shoreland zoning requirements. Details are as follows:

- 49 trees are being removed with 21 of those within the 50-foot HAT setback
- Approximately 5,850 SF of understory duff later and low growth vegetation (predominantly non-native invasive honeysuckle) is being disturbed within 50 feet of the HAT.
- 5 tree species are proposed in approximate equal quantities with the evergreen trees located between the road shoulder grading and the top of embankment where they are anticipated to fit under the remaining mature forest canopy, and between existing trees and ledge. Field verification during construction will be required to ensure final plant locations are feasible if shallow ledge or significant remaining tree root stock is present.
- 3 shrubs (2 evergreen and 1 deciduous) are proposed to plant at the toe of the road embankment as well as in areas around the turnaround where fitting larger trees will be challenging given limited space and the need to maintain an area for plowed snow.
- Deciduous trees are spread throughout the area.

- The bioretention cells will be filled with a mix of wet, drought and salt tolerant shrubs and perennials which are shown on the plan as a hatched area. The notes on the plan and drawing C-16 plant schedule describe the random pattern mixing of these plants throughout the bio retention cells.
- All other disturbed areas will be planted with a native roadside mix of perennial grasses and flowers. It is recommended that this area be mowed once a year in the fall to maintain the mix of plants. If mowed more often, it will revert to mostly lawn grasses.
- Mature plant sizes are listed on the plant list to give a sense of the amount of screening that may occur over time.

e) Service, Storage, and Utility Areas

Not applicable

f) Paving, Parking, and Storage Areas

No paving, parking, or storage is located within the side or rear setback of the property, nor within the front setback of the property.

g) Handicapped Accessibility

The pier is designed to meet ADA requirements.

h) Loading Facilities

Not applicable.

i) Parking, Loading, and Protective Buffers

The non-vegetated area of the land being developed will be less than 75% and a minimum of 25% of the land area being developed either remains in its natural state or consists of landscape and lawn areas.

j) Open Space

Not applicable.

k) External Lighting

An electrical site plan is included in the drawing set which shows the site lighting. Full cut off fixtures will be utilized and lighting will be the minimum necessary for safety and functionality.

l) Signs

Not applicable.

m) Historic and Archeological Resources.

See attachment 10 for a letter from the Maine Historic Preservation Commission clearing the project.

Shoreland Zoning Land Use Standards

The project will comply with the applicable standards of Article XIV. Section 15.C.

- Access from shore will be developed on soils appropriate for the use. A detailed erosion control plan has been prepared for the project.
- The location does not interfere with existing beach areas.
- The facility has been located to minimize adverse effects on fisheries. The plan was reviewed be the National Marine Fisheries Service.
- The facility size is the minimum necessary to carry out current and future research activities, and is consistent with the surrounding character and uses of the area, including the Camp Ellis pier on the opposite side of the river.
- An 8 ft x 10 ft shed for storage of life jackets, tools, research equipment is proposed on the pier, and is an operational necessity. The shed will not exceed 20 ft in height.

Waivers:

Four waivers are requested:

- Article XI. II. Section 5.B.1.a. – The rate of post development runoff shall not exceed that of pre-development. As noted in the cover letter for the previous submission, this waiver has historically been granted by the planning board for projects located on the UNE parcel that are directly tributary to tidal receiving waters, which will be the case for this project. There will be no impact on the capacity of a receiving downgradient storm system. The bioretention filters will provide stormwater quality enhancement and cooling of runoff, as well as a level of stormwater detention. Level spreaders will be utilized to evenly distribute runoff from the bioretention filters into sheet flow. Although an increase in the rate of runoff is shown at two point locations on the drainage plans, the reality is that the stormwater runoff from the subcatchments is distributed over a wide area.

  Note that the peer review engineer has indicated support for this waiver.

- Article XI.II. Section 5.B.1.e.3. - No slope shall be created which results in a slope of more than two feet horizontal to one foot vertical unless proper retaining walls are proposed. The design includes slopes which exceed this standard in ledge (1/4H:1V) and along the drive (1H:1V). This waiver has been requested by UNE and granted by the planning board for all projects proposed by UNE on the campus due to the presence of ledge and the desire to

minimize impacts of construction on adjacent areas. Based on our experience the ledge in the area is stable at steeper slopes. Turf reinforcement matting specifically designed to stabilize steeper slopes will be utilized along the drive sideslopes.

- Article VI. Section 26.F. - No cut or fill slopes that exceed 3 horizontal to 1 vertical. See above for justification.

- Article XIV. Section 15.H.4. Road and driveway banks shall be no steeper than a slope of two horizontal to one vertical, and shall be graded and stabilized in accordance with the provisions for erosion and sedimentation control contained in Section 15T. See above for justification for steeper slopes. The erosion control specified for the project exceeds the standards of Section 15T.

We are in hopes the planning board will find that the proposal is consistent with city regulations and approval standards. We look forward to meeting with the planning board on June 18.

If you have any questions or comments, please contact me.

Sincerely,
Site Design Associates

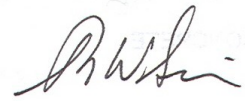

Tom Saucier, P.E.
President

cc: Alan Thibeault, UNE, Vice President for University Operations

Attachment A
Letter responding to May 13, 2025 staff comments

Site Design Associates
Consulting Engineering and Land Planning

June 9, 2025

David C.M. Galbraith, City Planner
City of Biddeford
P.O. Box 586
205 Main Street
Biddeford, ME 04005

RE: University of New England
Proposed Research Pier

Dear David and Planning Board Members:

On behalf of University of New England (UNE), Site Design Associates (SDA) is pleased to submit this response to staff and peer review comments dated May 13, 2025. The comments are included below in italics, with our responses.

A. Staff Review Comments

Comment: *The Preliminary Application shall include copies of the required notification letters provided to the various Native American Tribes listed above in Section 3*

Response: **The letters to the tribes, the plan included with the letters, the certified mail receipts, and the two responses received are attached at the end of this letter. This information was included in the DEP NRPA, ACOE and Harbor Master applications previously submitted to the city. In all cases the information was deemed complete and the DEP and ACOE permits issued.**

Note that the plan that was included with the letters reflected the pier in the currently proposed location. The purpose of the request for tribal review is to give them the opportunity to review the location of proposed projects to verify whether the proposed development would affect known properties of religious and/or cultural significance. It is not intended to seek approval of any design.

Comment: *Limited information was provided by the Applicant on the checklist. Applicant should fully complete the checklist for the next submission, including column D (list drawing sheet number where information is provided) and* column E (reason not provided/comment).

23 Whitney Way – Topsham, Maine 04086
Phone: (207) 449-4275 email: info@sitedesignassociates.biz

Response:

An updated copy of the checklist is provided with this submission.

Comment:

Section 74-35 Construction of Wharf, Pier, or Landing Regulated states that new piers require permission from the Harbormaster

Response:

Refer to the attached letter addressing the Planning Board Members comments.

Comment:

Section 74-36 Floats requires permission from the Harbormaster for floats that are an integral part of a pier.

Response:

Section 74-36 is not applicable to this project. Section 74-36 addresses floats that are *not* an integral part of a pier.

Comment:

The application lists two (2) project waivers being sought. The application didn't include a narrative or rational for Staff or the Board to evaluate the requested waivers. This information shall be included in the Preliminary application package.

Response:

Four waivers are requested:

- **Article XI. II. Section 5.B.1.a. – The rate of post development runoff shall not exceed that of pre-development. As noted in the cover letter for the previous submission, this waiver has historically been granted by the planning board for projects located on the UNE parcel that are directly tributary to tidal receiving waters, which will be the case for this project. There will be no impact on the capacity of a receiving downgradient storm system. The bioretention filters will provide stormwater quality enhancement and cooling of runoff, as well as a level of stormwater detention. Level spreaders will be utilized to evenly distribute runoff from the bioretention filters into sheet flow. Although an increase in the rate of runoff is shown at two point locations on the drainage plans, the reality is that the stormwater runoff from the subcatchments is distributed over a wide area.**

  Note that the peer review engineer has indicated support for this waiver.

- **Article XI.II. Section 5.B.1.e.3. - No slope shall be created which**

results in a slope of more than two feet horizontal to one foot vertical unless proper retaining walls are proposed. The design includes slopes which exceed this standard in ledge (1/4H:1V) and along the drive (1H:1V). This waiver has been requested by UNE and granted by the planning board for all projects proposed by UNE on the campus due to the presence of ledge and the desire to minimize impacts of construction on adjacent areas. Based on our experience the ledge in the area is stable at steeper slopes. Turf reinforcement matting and geosynthetic reinforcement specifically designed to stabilize steeper slopes will be utilized along the drive sideslopes.

- **Article VI. Section 26.F. - No cut or fill slopes that exceed 3 horizontal to 1 vertical. See above for justification.**

- **Article XIV. Section 15.H.4. Road and driveway banks shall be no steeper than a slope of two horizontal to one vertical, and shall be graded and stabilized in accordance with the provisions for erosion and sedimentation control contained in Section 15T. See above for justification for steeper slopes. The erosion control specified for the project exceeds the standards of Section 15T.**

B. Peer Review Comments

Comment:

The Fire Department has expressed that the length of the turnaround does not meet their needs of a 70- foot-long turnaround at the end of the access road. The provided turnaround is approximately 40 feet long.

Response:

We analyzed the turning movements of the aerial apparatus and the results were provided to E. Dexter, Ass. Chief BFD for review. The results demonstrate there is adequate space for the aerial apparatus to maneuver. Additionally, we have adjusted the location of the security gate on the pier to provide additional space for turning maneuvers. We have enclosed an updated Vehicle Circulation Exhibit to convey the safe turn around of an emergency vehicle, at the end of this letter.

E. Dexter has indicated the design could be approved with a condition of approval that both Truck 32 and SH-34 are able to maneuver the turnaround post construction, and prior to final sign off they should be taken to the location for testing.

Mandating a turnaround larger than that shown would result in more clearing of trees and more impervious surface in the shoreland zone adjacent to the river, neither of which would be looked at favorably by the regulators if an alternative exists. The regulators had asked whether a narrower drive could be provided and we indicated that NFPA rules require 20 ft of width.

Comment:

Access road width has been increased to 20 feet, as requested by the Fire Department.

Response:

Acknowledged.

Comment:

Additional coordination items for the City are indicated within the Review Comments below in red font.

Response:

Acknowledged.

Comment:

Section 74-35 Construction of Wharf, Pier, or Landing Regulated states that new piers require permission from the Harbormaster.

Response:

Refer to response above.

Comment:

Section 74-36 Floats requires permission from the Harbormaster for floats that are an integral part of a pier.

Response:

Refer to response above.

Comment:

What erosion and sedimentation controls will be utilized for the construction of the pier abutment and pier? A turbidity curtain detail is included and assumed to be used for the pier but the location of this is not shown in plan view.

Response:

Turbidity from the project is anticipated to be limited and temporal associated with the installation of piles for the pier. Neither the State or Federal permits require the use of a turbidity curtain. The turbidity curtain detail has been removed from the plans. Areas of upland soil disturbance will utilize erosion

control BMP's as identified in the Erosion Control Notes and Details on sheets C-012, C-013, and C-014.

Comment:

A stabilized construction entrance, silt fence, biodegradable stabilization matting, and plunge pool are proposed for the construction of the proposed access road.

Response:

Acknowledged.

Comment:

A revegetation plan has been submitted showing tree, shrub, and perennial plantings within the shoreland zone and upland areas. The plan has been reviewed and approved by the Saco River Corridor Commission.

Response:

Acknowledged.

Comment:

The Inspection and Maintenance Plan of Stormwater Management Facilities includes a recertification requirement, which includes a five-year recertification to Maine DEP. This reference should be removed, since there is no DEP Stormwater Permit.

Response:

We have removed the language regarding the recertification to Maine DEP from the Inspection and Maintenance Plan.

Comment:

See Land Development Regulations, Article XI Site Plan Review, comments 1-5 below. A waiver of Section 61.A.12 will also be required.

Response:

We are unclear regarding the referenced section, since there is no section 61 in Article XI. If the intent was to reference Article VI, section 61.A.1-2 we do not believe a waiver is required. All new construction and development, is designed to reflect or resemble, as nearly as possible, natural runoff conditions in terms of volume, velocity and location of runoff. As noted previously, the rate of runoff after development will slightly exceed predevelopment runoff conditions, and the impact was evaluated in terms of potential soil erosion and sedimentation, drainage capacity, and the land use/land cover characteristics. The impact was determined to be minimal; therefore, a waiver of Article XI.

II. Section 5.B.1.a. was requested, which is supported by the peer review engineer.

Comment:

Subsection A states that any project involving parcels of land of greater than five acres, or any portion of a larger parcel greater than five acres, shall be required to conduct a wildlife study by a certified wildlife biologist. This provision may be waived, if a letter from the Maine Department of Inland Fisheries and Wildlife (MDIFW) indicates there are no significant habitat areas involved in the project area or abutting adjacent land. The Maine DEP Natural Resource Protection Act (NRPA) permit states that "according to the Department s Geologic Information System (GIS) database there are no mapped Essential or Significant Wildlife Habitats at the site. The Maine Department of Inland Fisheries and Wildlife (MDIFW) reviewed the proposed project and stated that the project is located adjacent to but outside of Tidal Waterfowl and Wading Bird Habitat (TWWH), a designated significant wildlife habitat. MDIFW stated that minimal impacts to piping plover and Blanding's turtle habitat are anticipated and provided general recommendations including minimizing vegetation removal and soil disturbance, and that time spent in the water should be minimized to the greatest extent practicable." Given the supporting information in the NRPA permit, we believe this requirement is met.

Response:

Acknowledged.

Comment:

The applicant has requested a waiver of Article XI.II Section 5.B.1 to allow a small increase in peak stormwater runoff rates. The applicant has stated they are requesting this waiver since stormwater discharges directly to a tidal receiving water and there will be no impact on a downgradient storm system. Since there's only a small increase in peak runoff rate and Chapter 500 does allow for a waiver of this requirement for sites discharging to coastal wetlands/rivers, we recommend granting this waiver.

Response:

Acknowledged.

Comment:

Bioretention systems are proposed to provide stormwater treatment. 76% of the new impervious area and 72% of the new developed area are treated, which meets the Maine DEP General Standard water quality treatment requirements for linear developments.

Response:

Acknowledged.

Comment:

The Grading and Drainage Plan and HydroCAD model refers to the stormwater treatment practices as Bioretention Filter Cells; however, the details for stormwater practices refer to them as Grassed Underdrained Soil Filters. All notations should be updated to be consistent between plan, details, and model.

Response:

We have revised the plans, details, and hydrology model for consistency. Moving forward, these BMPs will be referred to as Bioretention Filter Cells.

Comment:

A detail should be included in the plans for the 3' diameter catch basin with beehive grate.

Response:

We have revised the plans to include the details mentioned above. The Bioretention Filter Cell detail has been revised to call out an ADS Nyloplast Drain Basin (See Sheet C-103) and the ADS Nyloplast 18" Drain Basin W/Beehive Grate Detail can be found on Sheet C-014.

Comment:

The 3' diameter catch basins are modeled with 18" horizontal orifices (beehive grates). The Grassed Underdrained Soil Filter detail and Granding and Drainage Plan show the beehive grate as the entire catch basin diameter. Please clarify what size the grate is and update the plans and model as needed.

Response:

See response above.

Comment:

The applicant has requested a waiver of Article XI.II Section 5.B.1.e.3 to allow for slopes steeper than 2:1 because of ledge. 1:1 vegetated reinforced slopes are proposed where there is no ledge and 1:10 max slopes are proposed where there is ledge.

Has the ledge cut been reviewed by a geotechnical engineer for stability?

Additional information about the vegetated reinforced slopes is

needed. A 1:1 slope is steep and difficult to vegetate, even with matting. The slope detail on C-013 shows horizontal lines into the slope that are not labeled. Are these additional stabilization measures?

Article XIV, 15.H.4 also prohibits road and driveway banks to be steeper than 2:1, and a waiver would be needed based on the proposed slopes.

Response:

The proposed ledge cuts reflect the same conditions used along the existing access road to the Marine Science Center which has been in place and stable for over 20 years. Conditions will be reviewed in the field by a geotechnical engineer and any loose material will be removed to result in a stable finished slope which may be between 1:1 and 1:10 depending on the conditions encountered.

The slope protection has been specified as a turf reinforcement mat, suitable for stabilization of the slopes shown. Additionally, geosynthetic reinforcement will be incorporated into the reinforced slope to provide stability. Details will be incorporated into the final construction plans for the project.

A waiver of article XIV. Section 15.H.4. has been requested. See previous discussion.

Comment:

North arrow provided on C-006 is incorrect and should be reoriented.

Response:

We have revised the north arrow on Sheet C-006 to properly show the orientation of the drawing.

Comment:

Proposed spot grades along access road do not match proposed contours or vertical profile. For example, see Sta. 4+00. All proposed elevations should correlate between plan view, profile view, cross sections.

Response:

We have revised the plans, profiles, and cross-sections to properly correlate between the sheets.

Comment:

Typical Section provided on sheet C-008 shows the 1:1 embankment starting behind the proposed guardrail. However, Plan View (C-006/007) shows the 1:1 embankment starting in front of the guardrail. The typical section and

plan view should correlate. Additionally, an adequate guardrail "shelf" should be provided behind the guardrail posts for support.

Response:

Plans have been revised such that the guardrail is within the shelf that is above the 1:1 reinforced slope.

Comment:

Vertical curve data is only partially shown in the access road profile (C-006/007). Adjust viewports so all data is legible.

Response:

Plan sheets have been corrected to show all vertical curve data.

Comment:

Proposed pipes missing from access road profile (C-006/007) and storm drain callouts/leader lines pointing to incorrect location. Clarify where storm drain pipes are in profile.

Response:

We have revised the viewports in Sheets C-006 and C-007 to properly show storm drain pipes in the access road profiles.

Comment:

Article XIV, 15.H.1 requires roads and driveways within the shoreland zone to be set back at least 100 feet, horizontal distance, from the normal high-water line of a great pond classified GPA or a river that flows to a great pond classified GPA, and 75 feet, horizontal distance, from the normal high-water line of other water bodies, tributary steams, or the upland edge of a wetland unless no reasonable alternative exists as determined by the Planning Board. However, Section 15.H.1 does not apply to roads or driveways that provide access permitted structures and facilities located nearer to the shoreline due to operational necessity. Since the pier is a permanent structure with operational necessity to the shoreline and the access road is providing access to the pier, we believe the proposed access road is allowed by the Ordinance.

Response:

Acknowledged.

Comment:

The pier is proposed in the Institutional (IN) zone and Limited Residential (LR) shoreland zoning overlay district. An 8'x10' shed is also proposed on the pier to store life jackets, tools, and research equipment and is stated to be an operational necessity. Although the Shoreland Zoning Ordinance does not allow structures within 75' of the normal high-water line in the Limited Residential overlay district, the setbacks do not apply to structures that are

an operational necessity for direct water access. Based on the information provided, we believe the proposed structure is allowed by the Ordinance.

Response:

Acknowledged.

Comment:

The cover letter for the application indicates the plan was reviewed by the National Marine Fisheries Service. Have review comments from the National Marine Fisheries Service been provided to the City?

Response:

The Army Corps of Engineers requests comments and input from NMFS as a component of their review. The comments we received were verbal during a Teams meeting with NMFS and the ACOE on February 5, 2025. The meeting was held to discuss whether construction activity and/or the project would be likely to affect Atlantic Sturgeon, and how to best go about making that determination. The final determination made as a result of that meeting was that the project was not likely to adversely affect Atlantic Sturgeon, and the ACOE permit was issued.

Comment:

A submerged lands lease or easement is required for structures, such as piers, located on publicly-owned submerged lands. Has a submerged lands lease or easement been secured for the project through the Maine Department of Agriculture, Conservation & Forestry, Bureau of Parks and Lands.

Response:

We will be requesting that the planning board condition any approval on receiving a submerged lands lease from the Submerged Lands Program.

Comment:

Applicant should provide comments about how the pier and shed comply with Article XII Floodplain Management Ordinance requirements and specifically Section R, Coastal Floodplains. Please be sure to include how pier, shed, and utility elevation were selected and if sea level rise was considered.

Response:

It is not clear to us that the Floodplain Management Ordinance is applicable to the pier and floats. From the code: The City of Biddeford has chosen to become a participating community in the National Flood Insurance Program and agreed to comply with the

requirements of the National Flood Insurance Act of 1968, through the establishment of its Floodplain Management Ordinance. The National Flood Insurance Act of 1968, which established the National Flood Insurance Program (NFIP), primarily focuses on insuring improved real property or mobile homes located within designated Special Flood Hazard Areas (SFHA). Essentially, the program covers structures that are walled and roofed, principally above ground, and affixed to a permanent site. This includes residential, industrial, commercial, and agricultural buildings. Piers and floats, specifically those used for "boat-related purposes", are generally not covered under the NFIP standard flood insurance policy.

In regards to compliance with section R, Coastal Floodplains:

- **The bottom of all electrical work and permanent fixtures and components, will be elevated to at least one foot above the base flood elevation.**
- **The bottom of the shed will be 4 feet above the base flood elevation.**
- **The project was designed by a professional engineer.**

Regarding sea level rise, GEI conducted a flood risk analysis to assess the potential exposure of the pier to floodwaters in current conditions and under various scenarios of Sea Level Rise that may potentially occur throughout the structure life. For the analysis, GEI utilized the scenarios put forth by the Maine Climate Council (MCC) in their 2020 report "Maine Won't Wait: A Four-Year Plan for Climate Action." The MCC recommends consideration of sea level rise based on two separate scenarios:

- **Commit to Manage Scenario – This reflects the "intermediate" sea level rise curve from the 2017 NOAA model, with a relative sea level rise of 3.9 feet in 2100 (relative to 2000 mean sea level)**
- **Prepare to Manage – This reflects the "high" sea level rise curve from the 2017 NOAA model, with a relative sea level rise of 8.8 feet in 2100 (relative to 2000 mean sea level)**

Sea level rise curves published in the referenced MCC report are shown below for reference:

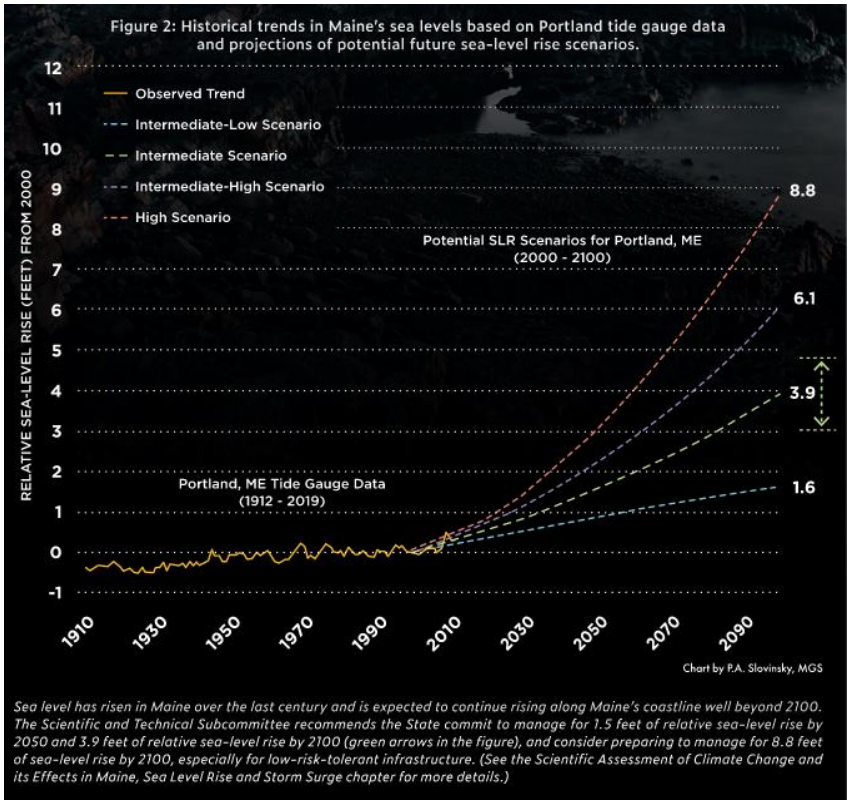

GEI uses these scenarios to project future water elevations throughout the tidal range and in flood/storm events, throughout the design life of the structure, and compares those elevations to the proposed elevations of various assets to assess the level of risk from exposure to floodwaters.

The design life for the pier is assumed to be approximately 75 years, so the end of life would be approximately 2100. GEI has designed the structure for uplift and lateral loading assuming water elevations associated with the storm surge and wave action during 100-year recurrence interval coastal storm events under the Commit to Manage scenario. This reflects an appropriate design condition that reasonably balances structure risk throughout the design life, project functionality, adjacent site impacts, and project cost. The pier is designed to accommodate conditions through the end of life under the Commit to Manage scenario (3.9 feet of SLR).

Comment:

The cover letter for the application indicates the plan was reviewed by the National Marine Fisheries Service. Have review comments from the National Marine Fisheries Service been provided to the City?

Response:

The Army Corps of Engineers requests comments and input from NMFS as a component of their review. The comments we received were verbal during a Teams meeting with NMFS and the ACOE on February 5, 2025. The meeting was held to discuss whether construction activity and/or the project would be likely to affect Atlantic Sturgeon, and how to best go about making that determination. The final determination made as a result of that meeting was that the project was not likely to adversely affect Atlantic Sturgeon, and ACOE issued their permit.

Comment:

Article XIV, 15.H.1 requires roads and driveways within the shoreland zone to be set back at least 100 feet, horizontal distance, from the normal high-water line of a great pond classified GPA or a river that flows to a great pond classified GPA, and 75 feet, horizontal distance, from the normal high-water line of other water bodies, tributary steams, or the upland edge of a wetland unless no reasonable alternative exists as determined by the Planning Board. However, Section 15.H.1 does not apply to roads or driveways that provide access to permitted structures and facilities located nearer to the shoreline due to operational necessity. Since the pier is a permanent structure with operational necessity to the shoreline and the access road is providing access to the pier, we believe the proposed access road is allowed by the Ordinance.

Response:

Acknowledged.

Comment:

The pier is proposed in the Institutional (IN) zone and Limited Residential (LR) shoreland zoning overlay district. An 8'x10' shed is also proposed on the pier to store life jackets, tools, and research equipment and is stated to
be an operational necessity. Although the Shoreland Zoning Ordinance does not allow structures within 75' of the normal high-water line in the Limited Residential overlay district, the setbacks do not apply to structures that are an operational necessity for direct water access. Based on the information provided, we believe the proposed structure is allowed by the Ordinance.

Response:

Acknowledged.

Comment:

A submerged lands lease or easement is required for structures, such as piers, located on publicly-owned submerged lands. Has a submerged lands lease or easement been secured for the project through the Maine Department of Agriculture, Conservation & Forestry, Bureau of Parks and Lands?

Response:

We will be requesting that the planning board condition any approval on receiving a submerged lands lease from the Submerged Lands Program.

In closing, we note that based on the city staff report dated May 13, 2025 staff found the application satisfies the City's Shoreland Zoning Ordinance and Site Plan criteria.

We believe that City Staff and Planning Board will also find that the project conforms to the UNE Institutional Zone Master Plan submission, with regards to the project location, design, and applicable standards. We believe we have satisfactorily addressed staff comments. If you have any additional questions or comments, or require additional information, please do not hesitate to contact Alan Thibeault, (602-2253) or me (449-4275).

We look forward to meeting with the Planning Board on June 18 to further discuss this project.

Sincerely,
Site Design Associates

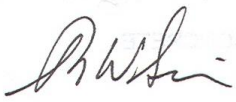

Tom Saucier, P.E.
President

cc: Alan Thibeault, UNE, Vice President for University Operations

Site Design Associates
Consulting Engineering and Land Planning

April 10, 2023

THPO and Environmental Planner
Houlton Band of Maliseet Indians
88 Bell Road
Littleton, Maine 04730

RE: Proposed Marine Science Center Pier
11 Hills Beach Road
Biddeford, Maine

On behalf of our client, University of New England (UNE), we are assisting with the preparation of Maine Department of Environmental Protection Natural Resources Protection Act and U.S. Army Corps of Engineers Permit applications. The applications are for the installation of a permanent pier and float system on UNE's campus at 11 Hills Beach Road in Biddeford.

This letter and the enclosed materials serve as a means to notify you of the project and give you an opportunity to determine whether the proposed development would affect properties of religious and/or cultural significance. If the Tribe has concerns in this area, please notify us by letter to the address below, contact me at 207-449-4275 or via email at tsaucier@sitedesignassociates.biz.

Thank you for your assistance and the generosity of your time to review this project in reference to the Tribe's concerns.

Sincerely,

Site Design Associates

Tom Saucier, P.E.
President

Enclosures

23 Whitney Way Topsham, Maine 04086
Phone: (207) 449-4275 email: info@sitedesignassociates.biz

Site Design Associates
Consulting Engineering and Land Planning

April 10, 2023

THPO
Aroostook Band of Micmacs
7 Northern Road
Presque Isle, ME 04769

RE: Proposed Marine Science Center Pier
11 Hills Beach Road
Biddeford, Maine

On behalf of our client, University of New England (UNE), we are assisting with the preparation of Maine Department of Environmental Protection Natural Resources Protection Act and U.S. Army Corps of Engineers Permit applications. The applications are for the installation of a permanent pier and float system on UNE's campus at 11 Hills Beach Road in Biddeford.

This letter and the enclosed materials serve as a means to notify you of the project and give you an opportunity to determine whether the proposed development would affect properties of religious and/or cultural significance. If the Tribe has concerns in this area, please notify us by letter to the address below, contact me at 207-449-4275 or via email at tsaucier@sitedesignassociates.biz.

Thank you for your assistance and the generosity of your time to review this project in reference to the Tribe's concerns.

Sincerely,

Site Design Associates

Tom Saucier, P.E.
President

Enclosures

23 Whitney Way Topsham, Maine 04086
Phone: (207) 449-4275 email: info@sitedesignassociates.biz

Site Design Associates
Consulting Engineering and Land Planning

April 10, 2023

THPO
Passamaquoddy Tribe of Indians
Pleasant Point Reservation
PO Box 343
Perry, Maine 04667

RE: Proposed Marine Science Center Pier
11 Hills Beach Road
Biddeford, Maine

On behalf of our client, University of New England (UNE), we are assisting with the preparation of Maine Department of Environmental Protection Natural Resources Protection Act and U.S. Army Corps of Engineers Permit applications. The applications are for the installation of a permanent pier and float system on UNE's campus at 11 Hills Beach Road in Biddeford.

This letter and the enclosed materials serve as a means to notify you of the project and give you an opportunity to determine whether the proposed development would affect properties of religious and/or cultural significance. If the Tribe has concerns in this area, please notify us by letter to the address below, contact me at 207-449-4275 or via email at tsaucier@sitedesignassociates.biz.

Thank you for your assistance and the generosity of your time to review this project in reference to the Tribe's concerns.

Sincerely,

Site Design Associates

Tom Saucier, P.E.
President

Enclosures

23 Whitney Way Topsham, Maine 04086
Phone: (207) 449-4275 email: info@sitedesignassociates.biz

Site Design Associates
Consulting Engineering and Land Planning

April 10, 2023

THPO
Passamaquoddy Tribe of Indians
Indian Township Reservation
PO Box 301
Princeton, Maine 04668

RE: Proposed Marine Science Center Pier
11 Hills Beach Road
Biddeford, Maine

On behalf of our client, University of New England (UNE), we are assisting with the preparation of Maine Department of Environmental Protection Natural Resources Protection Act and U.S. Army Corps of Engineers Permit applications. The applications are for the installation of a permanent pier and float system on UNE's campus at 11 Hills Beach Road in Biddeford.

This letter and the enclosed materials serve as a means to notify you of the project and give you an opportunity to determine whether the proposed development would affect properties of religious and/or cultural significance. If the Tribe has concerns in this area, please notify us by letter to the address below, contact me at 207-449-4275 or via email at tsaucier@sitedesignassociates.biz.

Thank you for your assistance and the generosity of your time to review this project in reference to the Tribe's concerns.

Sincerely,

Site Design Associates

Tom Saucier, P.E.
President

Enclosures

23 Whitney Way Topsham, Maine 04086
Phone: (207) 449-4275 email: info@sitedesignassociates.biz

Site Design Associates
Consulting Engineering and Land Planning

April 10, 2023

THPO
Penobscot Nation
Cultural and Historic Preservation Dept.
12 Wabanaki Way
Indian Island, Maine 04468

RE: Proposed Marine Science Center Pier
11 Hills Beach Road
Biddeford, Maine

On behalf of our client, University of New England (UNE), we are assisting with the preparation of Maine Department of Environmental Protection Natural Resources Protection Act and U.S. Army Corps of Engineers Permit applications. The applications are for the installation of a permanent pier and float system on UNE's campus at 11 Hills Beach Road in Biddeford.

This letter and the enclosed materials serve as a means to notify you of the project and give you an opportunity to determine whether the proposed development would affect properties of religious and/or cultural significance. If the Tribe has concerns in this area, please notify us by letter to the address below, contact me at 207-449-4275 or via email at tsaucier@sitedesignassociates.biz.

Thank you for your assistance and the generosity of your time to review this project in reference to the Tribe's concerns.

Sincerely,

Site Design Associates

Tom Saucier, P.E.
President

Enclosures

23 Whitney Way Topsham, Maine 04086
Phone: (207) 449-4275 email: info@sitedesignassociates.biz



U.S. Postal Service™
CERTIFIED MAIL® RECEIPT
Domestic Mail Only
For delivery information, visit our website at www.usps.com®.
Perry, ME 04667
OFFICIAL USE
Certified Mail Fee $4.15
$3.35
Extra Services & Fees (check box, add fee as appropriate)
Return Receipt (hardcopy) $0.00
Return Receipt (electronic) $0.00
Certified Mail Restricted Delivery $0.00
Adult Signature Required $0.00
Adult Signature Restricted Delivery $
Postage $0.87
Total Postag $8.37
Sent To THPO
Passamaquoddy Tribe of Indians
Street and Ap Pleasant Point Reservation
PO Box 343
City, State, Z Perry, ME 04667
0086 7
Postmark Here
04/11/2023
PS Form 3800, April 2015 PSN 7530-02-000-9047 See Reverse for Instructions
7022 1670 0001 0356 2178

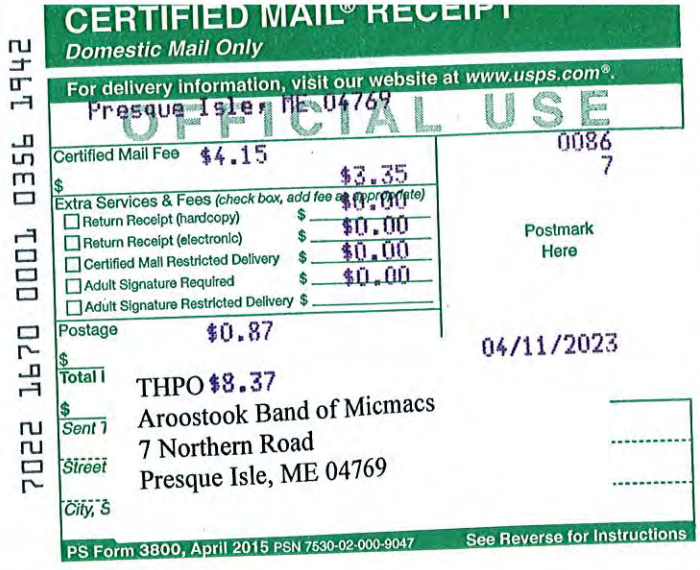

U.S. Postal Service™
CERTIFIED MAIL® RECEIPT
Domestic Mail Only
For delivery information, visit our website at www.usps.com®.
Presque Isle, ME 04769
OFFICIAL USE
Certified Mail Fee $4.15
$3.35
Extra Services & Fees (check box, add fee as appropriate)
Return Receipt (hardcopy) $0.00
Return Receipt (electronic) $0.00
Certified Mail Restricted Delivery $0.00
Adult Signature Required $0.00
Adult Signature Restricted Delivery $
Postage $0.87
Total I $8.37
Sent T THPO
Aroostook Band of Micmacs
Street 7 Northern Road
City, S Presque Isle, ME 04769
0086 7
Postmark Here
04/11/2023
PS Form 3800, April 2015 PSN 7530-02-000-9047 See Reverse for Instructions
7022 1670 0001 0356 1942

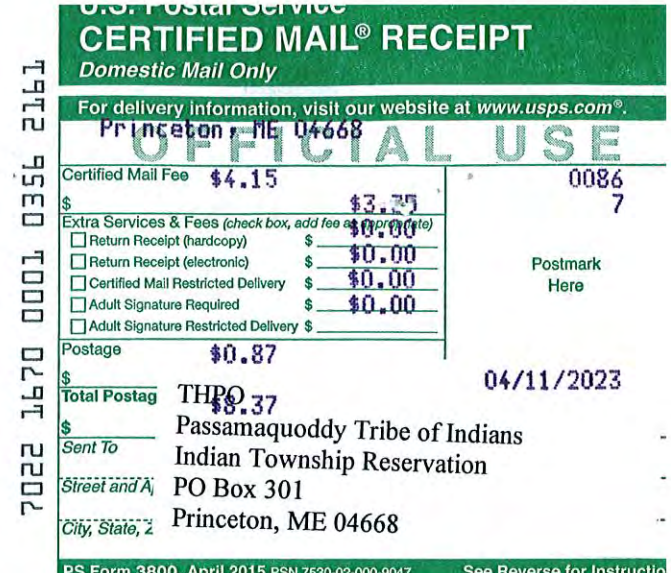

U.S. Postal Service™
CERTIFIED MAIL® RECEIPT
Domestic Mail Only
For delivery information, visit our website at www.usps.com®.
Princeton, ME 04668
OFFICIAL USE
Certified Mail Fee $4.15
$3.35
Extra Services & Fees (check box, add fee as appropriate)
Return Receipt (hardcopy) $0.00
Return Receipt (electronic) $0.00
Certified Mail Restricted Delivery $0.00
Adult Signature Required $0.00
Adult Signature Restricted Delivery $
Postage $0.87
Total Postag $8.37
Sent To THPO
Passamaquoddy Tribe of Indians
Street and A Indian Township Reservation
PO Box 301
City, State, Z Princeton, ME 04668
0086 7
Postmark Here
04/11/2023
PS Form 3800, April 2015 PSN 7530-02-000-9047 See Reverse for Instructio
7022 1670 0001 0356 2161

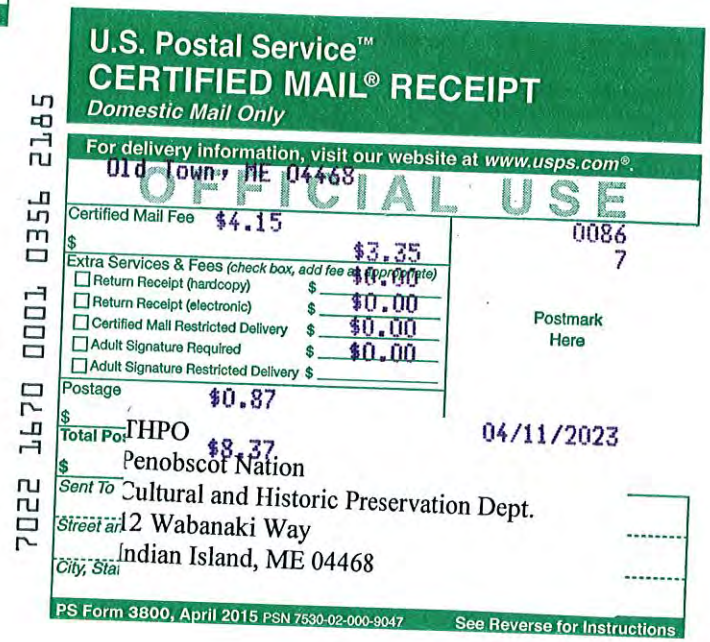

U.S. Postal Service™
CERTIFIED MAIL® RECEIPT
Domestic Mail Only
For delivery information, visit our website at www.usps.com®.
Old Town, ME 04468
OFFICIAL USE
Certified Mail Fee $4.15
$3.35
Extra Services & Fees (check box, add fee as appropriate)
Return Receipt (hardcopy) $0.00
Return Receipt (electronic) $0.00
Certified Mail Restricted Delivery $0.00
Adult Signature Required $0.00
Adult Signature Restricted Delivery $
Postage $0.87
Total Po $8.37
$ THPO
Penobscot Nation
Sent To Cultural and Historic Preservation Dept.
Street an 12 Wabanaki Way
City, Sta Indian Island, ME 04468
0086 7
Postmark Here
04/11/2023
PS Form 3800, April 2015 PSN 7530-02-000-9047 See Reverse for Instructions
7022 1670 0001 0356 2185

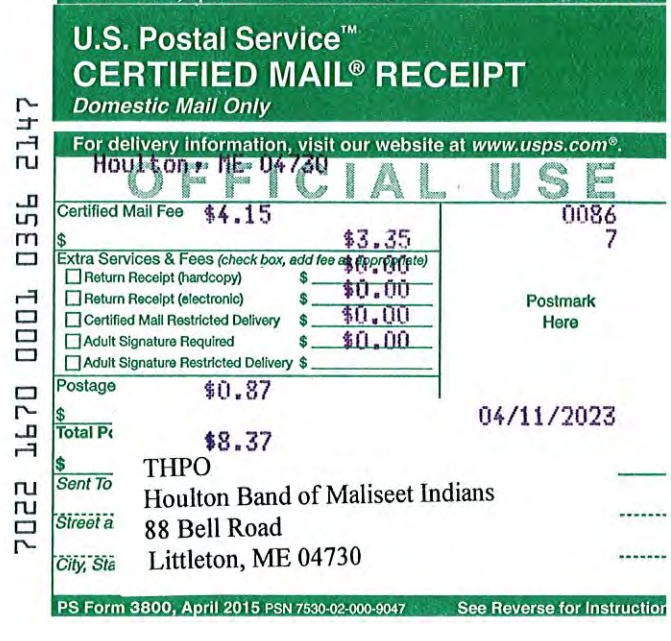

U.S. Postal Service™
CERTIFIED MAIL® RECEIPT
Domestic Mail Only
For delivery information, visit our website at www.usps.com®.
Houlton, ME 04730
OFFICIAL USE
Certified Mail Fee $4.15
$3.35
Extra Services & Fees (check box, add fee as appropriate)
Return Receipt (hardcopy) $0.00
Return Receipt (electronic) $0.00
Certified Mail Restricted Delivery $0.00
Adult Signature Required $0.00
Adult Signature Restricted Delivery $
Postage $0.87
Total Pc $8.37
$ THPO
Houlton Band of Maliseet Indians
Sent To 88 Bell Road
Street a Littleton, ME 04730
City, Sta
0086 7
Postmark Here
04/11/2023
PS Form 3800, April 2015 PSN 7530-02-000-9047 See Reverse for Instruction
7022 1670 0001 0356 2147


SACO
NORWOOD MARINA
CAMP ELLIS TOWN PIER
SACO RIVER
SACO BAY
FEDERAL CHANNEL
JORDAN POINT
PROPOSED PIER
PROPOSED ACCESS ROAD
MARINE SCIENCE CENTER
UNIVERSITY OF NEW ENGLAND CAMPUS
ROUTE 9
NEWTON ROAD
HILLS BEACH ROAD
BIDDEFORD
SEA BREEZE AVE
LONG AVE
HILLS BEACH
HILLS BEACH ROAD
612.6103
355.319°
427.4478
41.8134°
371.7535
298.819°
552.8257
359.4063°
223.4801
295.9063°
223.4285
62.9328°
1130.7745
355.319°
3881.4977
359.4063°
3881.4977
359.4063°
371.5988
342.6475°
669.4197
14.3968°
1954.0347
175.319°
1954.0347
175.319°
1000
175.319°
1027.3684
302.9498°
668.8048
309.1461°
719.5195
129.1461°
453.549
162.6475°
685.7071
194.3968°
209.8609
218.7276°
254.6578
218.7276°
1050.2127
179.4063°



SOURCE:
USGS TOPOGRAPHICAL MAP OF BIDDEFORD, MAINE 2022

SITE LOCATION MAP

(NOT TO SCALE)

PENOBSCOT NATION
CULTURAL & HISTORIC PRESERVATION
12 WABANAKI WAY, INDIAN ISLAND, ME 04468

CHRIS SOCKALEXIS – TRIBAL HISTORIC PRESERVATION OFFICER
E-MAIL: chris.sockalexis@penobscotnation.org

NAME	Tom Saucier
ADDRESS	Site Design Associates 23 Whitney Way Topsham, ME 04086
OWNER'S NAME	University of New England
TELEPHONE	201-449-4275
EMAIL	tsaucier@sitedesignassociates.biz
PROJECT NAME	Marine Science Center Pier – 11 Hills Beach Road
PROJECT SITE	Biddeford, ME
DATE OF REQUEST	April 10, 2023
DATE REVIEWED	October 19, 2023

Thank you for the opportunity to comment on the above referenced project. This project appears to have no impact on a structure or site of historic, architectural or archaeological significance to the Penobscot Nation as defined by the National Historic Preservation Act of 1966, as amended.

If there is an inadvertent discovery of Native American cultural materials during the course of the project, please contact my office at (207) 817-7471. Thank you for consulting with the Penobscot Nation Tribal Historic Preservation Office with this project.

Chris Sockalexis, THPO
Penobscot Nation

Tribal Historic Preservation Office
Passamaquoddy Tribe
PO Box 159 Princeton, Me. 04668
207-214-4051

Site Design

23 Whitney Way

Topsham, Me

Re: Biddeford – 11 Hills Beach Rd

Dear Tom;

The Passamaquoddy THPO has reviewed the following applications regarding the historic properties and significant religious and cultural properties in accordance with NHPA, NEPA, AIRFA, NAGPRA, ARPA, Executive Order 13007 Indian Sacred Sites, Executive Order 13175 Consultation and Coordination with Indian Tribal Governments, and Executive Order 12898 Environmental Justice.

The Pier Project listed above will not have any impact on cultural and historical concerns of the Passamaquoddy Tribe but is concerned about the road work, will there be archeological work . Should buried artifacts, human remains, cultural sites or ground features be unexpectedly unearthed during ground disturbing activities, all construction should immediately cease and the resources be examined by a professional archaeologist. Additionally, all appropriate authorities- including all pertinent tribal entities should be notified.

Sincerely;

Donald Soctomah
Soctomah@gmail.com
THPO
Passamaquoddy Tribe

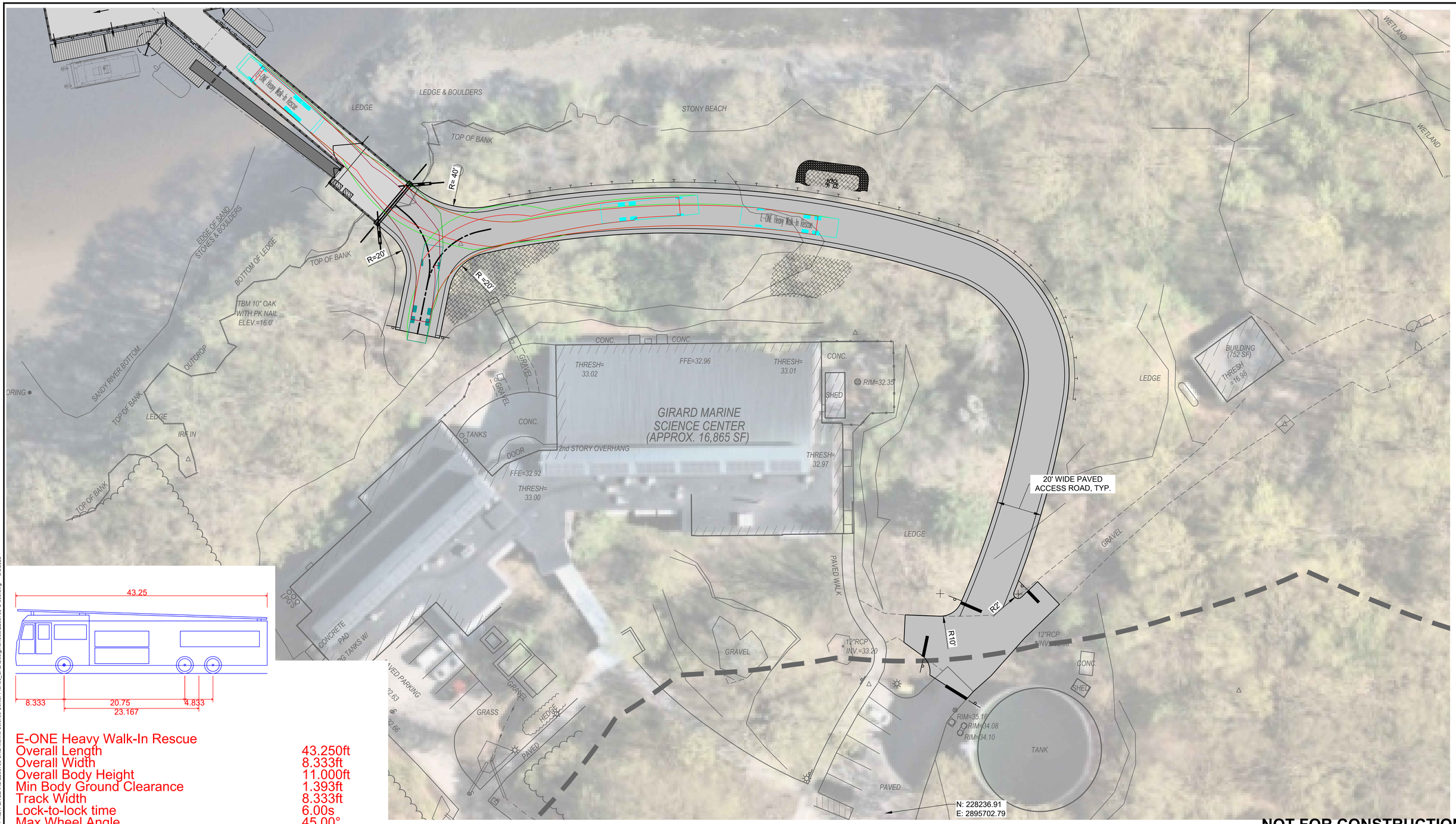

E-ONE Heavy Walk-In Rescue	
Overall Length	43.250ft
Overall Width	8.333ft
Overall Body Height	11.000ft
Min Body Ground Clearance	1.393ft
Track Width	8.333ft
Lock-to-lock time	6.00s
Max Wheel Angle	45.00°

NOT FOR CONSTRUCTION

Attention:
0 1"
If this scale bar does not measure 1" then drawing is not original scale.

DRAFT

Designed:	VD
Drawn:	VD
Checked:	BMM
Approved:	BMM
P.E. No:	13033
GEI Project	2203703

GEI Consultants
GEI CONSULTANTS, INC.
5 MILK STREET
PORTLAND, ME 04101
(207)797-8901

UNE
UNIVERSITY OF NEW ENGLAND
11 HILLS RD.
BIDDEFORD, MAINE

UNIVERSITY OF NEW ENGLAND MARINE SCIENCE CENTER PIER
11 HILLS BEACH ROAD
BIDDEFORD, YORK COUNTY, MAINE

NO	DATE	ISSUE/REVISION	APP
0			

SHEET NAME: **VEHICLE CIRCULATION EXHIBIT**

SHEET NO.: 1 OF 1

DICASTELNUOVO, VINNIE B:\Working\UNIVERSITY OF NEW ENGLAND\2203703 UNE Marine Science Center Pier\00_CAD\Design\Sheets\2203703-C-003.dwg - 6/6/2025

Attachment 14
UNE Response Letter Addressing
Planning Board Member Comments

UNIVERSITY OF NEW ENGLAND

INNOVATION FOR A HEALTHIER PLANET

June 11, 2025

David Galbraith, City Planner
City of Biddeford
P.O. Box 586
205 Maine Street
Biddeford, Maine 04005

RE: University of New England
Proposed Research Pier

Dear David and Planning Board Members:

In response to the questions and deliberations of the Planning Board after the presentation and public comments, UNE is pleased to submit the following:

After all of the discussion at the last meeting, is was clear that there was confusion on what city ordinances and regulations are applicable to this project and the pending Site Plan review.

Review Criteria
Toward the end of the May 21, 2025 Planning Board meeting and then in writing after the meeting, the City Solicitor, Harry Center, stated that the Planning Board process was governed by the City's Ordinances relating to Site Plan review and Shoreland Zoning Ordinance standards. The Site Plan criteria are found in Article XI.II Section 5.B of the City Ordinance while the Shoreland Zoning standards are found in Article XIV Section 15(c).

On May 27, 2025, Attorney Center wrote to the Planning Board reiterating what criteria the Planning Board's decision was governed by. He wrote, in part: "At this time, I see no basis for the City's Planning Board to deny this permit based upon the water depth at the location, the current, or any of the accusations made at the last meeting- as there are no standards within the City's Code of Ordinances/Shoreland Zoning Ordinance that would justify or support the denial of a pier based on such claims by the opponents." See attached, *EXT: UNE Research Pier*, at the end of this letter.

Prior to the May 21 meeting, Planning Office staff issued its report, *Planning Board Staff Report,* dated May 13, 2025, in regards to this project, in which it indicated that the Site Plan and Shoreland Zoning Review criteria applied to UNE's application for site plan approval. From a Zoning perspective, this project should be reviewed against the Institutional Zone and Shoreland Zone standards. This project was included on the

Planning Board approved University of New England Institutional Zone Master Plans on February 9, 2009, February 3, 2016, and again on the current plan approved April 19, 2023. In the aforementioned report, the City Planner wrote, in part: "Staff find that the application satisfies the City's Shoreland Zoning Ordinance and Site Plan criteria."

In light of the fact that there continues to be uncertainty about the Harbormaster's role in the approval of UNE's proposed pier. UNE's obligations and the Harbormaster's role are set forth in Section 74-35 of the City Ordinance. It is very important to understand that Section 74-35 was amended in September 2023 in order to clarify the role of the Harbormaster in the process as well as to clarify what an applicant must do to obtain permission. The amendments were drafted by John Schafer and presented to the City Council's Policy Committee by John Schafer on August 7, 2023. Essentially, the amendments created subsections with almost all new language becoming Sections 74-35(c) and (d).

As one can see in Section 74-35, there is no requirement or authority for the Harbormaster to evaluate a pier design or location and no standards or criteria by which any such evaluation would be done. There are no dimensional or design standards for the construction or location of a pier in any city ordinance. Nowhere does the Ordinance state that permission to construct a pier is contingent upon location, orientation, size, depth of water, current, or materials.

The Ordinance begins with **Section 74-35(a)**, which states: "No additions, alterations, new construction or/or changes to an existing wharf, pier or landing shall be made without prior permission of the Harbormaster."

Section 74-35(b) then states: "Permission for the construction of any new wharf or pier within the jurisdictional limits of the City shall not be granted without approval of the Harbormaster, along with federal, state and local governing authorities."

So that applicants can understand what they need to do, **Section 74-35(c)(1)-(10)** provides the detail of what an applicant must do to "obtain permission for any new wharf or pier." In June of 2024, UNE submitted the required information, including all items listed in subsections 1-10.

On August 19, 2024, UNE was notified by the City Manager that "Based on this information and in harmony with my earlier communications, please consider this as formal notification from the City of Biddeford that the application has been found in compliance with the above-mentioned City Code." *See* attached, scan_jbennett_2024-08-19-10-06-53.pdf.

That letter of course did not mean that UNE could begin building the pier. Rather, under Section 74-35, UNE is required to obtain regulatory approvals from entities such as the Army Corps of Engineers, the Maine Department of Environmental Protection, the Saco River Corridor Commission, and the Planning Board (referred to in the Ordinance as Biddeford Code Enforcement).

So that applicants and the Harbormaster would be clear about the Harbormaster's role, **Section 74-35(d)** provides the details of the Harbormaster's role and states: "The process to obtain permission for any new wharf or pier shall be facilitated by the Harbormaster. Initially, the Harbormaster shall be available to guide the applicant through the application process and finally, to sign off that all regulatory approvals have been obtained for construction."

Consistent with practice prior to the 2023 amendments, UNE engaged the Harbormasters and Chair of the Harbor Commission back in 2016 and sought their counsel on the proposed pier project. Their input was considered with some of it incorporated into the design that has been presented to the Planning Board. UNE engaged again with the current Harbormaster in later 2023 and listened to his stated concerns. Both Harbormasters' 2016 and 2023 input is described in detail in the memos from GEI, dated November 28, 2023, and from Baker Design Consultants (later merged into GEI), dated March 22, 2016. These two documents are included in the original Site Plan Application. In its staff report, the Planning Staff recognized the 2023 memo and quoted from it in its staff report.

To date, UNE has obtained required regulatory approvals from the Saco River Corridor Commission, Maine Department of Environmental Protection and the Army Corp of Engineers, which approvals have been provided to the Planning Board in the original UNE submission. The only remaining regulatory approval required under Section 74-35(c)(10) is the Site Plan Review Approval. Once all required regulatory approvals are obtained, the Harbormaster can finally "sign off that all regulatory approvals have been obtained," resulting in UNE having permission from the City to build the pier.

For anybody who still has questions, it could be helpful for them to watch John Schafer's August 7, 2023 discussion with the Policy Committee about the amendments to Section 74-35 that he drafted. A video of the meeting can be found on the City website at https://biddefordme.portal.civicclerk.com/event/1607/media

As one can see for themselves, during that meeting, Mr. Schafer told the Committee that the Harbormaster is "nothing but a facilitator" of the process and that the Harbormaster does not approve piers or issue permits. Mr. Schafer stated that Section 74-35(c)(1) - (10) is "nothing but a blueprint" for achieving approval from other regulators. When pressed by Committee members for clarification, Mr. Schafer emphasized that the Harbormaster is "nothing but a facilitator" and that the Harbormaster only affirms that approvals have been obtained and makes sure that the "blueprint is followed."

Moorings

The Planning Board deliberations also reflected on the potential impacts to moorings. While this is **not** a criterion of the Site Plan review ordinance, UNE will work with the City to mitigate any impacts and has offered to pay for any moorings relocations that may be required.

To clarify the consideration of ownership, as per the Maine State Statue, Title 38, Waters and Navigation, Chapter 1.1.3, Mooring Sites, "Assignment of these mooring privileges does not confer any right, title or interest in the submerged or intertidal lands owned by the state". This statue further clarifies "the harbor master shall assign and indicate only to the masters or owners of boats and vessels the location that they may occupy for mooring purposes and shall change the location of those moorings from time to time when the crowded condition of that harbor or great pond, the need to conform to section 7-A or other conditions render the change desirable".

The actual mooring balls and their associated tackle are the responsibility of the boat owner. The Biddeford Mooring Permit Application clearly states "The location is subject to change at any time at the discretion of Harbor Master or Deputy as conditions dictate.", in coordination with the state statute. Thus, the land is owned by the state, the moorings by the boat owners, and the harbor master has the reasonability to assign and relocate these moorings.

To better understand the potential impacts to moorings, UNE requested from the city it's mooring map, but was informed one was not available. In consultation with the Maine State Bureau of Parks and Recreation, we again requested a copy of the Biddeford Mooring Map. The Submerged Lands Coordinator informed UNE that they had spoken with the harbormaster and confirmed no mooring map was available. They were are to confirm from the harbormaster that two mooring were impacted by the proposed UNE Research Pier development.

In comparison of historical, 09/18/2013, Google Earth imagery, as compared to 2024, there appears to be several unoccupied mooring locations in this general area that could meet the need of relocating the impacted moorings. Additionally, UNE has offered to "swap" one of its current mooring locations for one of the impacted mooring locations. The owners of these moorings do not have a dingy on UNE's abutting shoreline and are already motoring to the moorings from other locations, so depending on where they are coming from, the relocated moorings might be closer to their point of origin.

Analysis documentation
In 2008 and 2009, UNE initiated an analysis of 9 sites along its shoreland to evaluate options for a new pier. Based on the criteria reviewed and UNE's programmatic needs, Site 7 was chosen as the optimal site for UNE. This site then was scrutinized for additional considerations utilized in the ultimate design. This included geotechnical surveys on both land and in water. Contour surveys were conducted twice in the water and then again on land. Evaluations of current and its impacts were conducted. Wetlands were surveyed and impacts analyzed. Initial discussions were had with all regulatory bodies in 2015 and 2016. This included conducting a site visit in 2016, with the harbormasters and chair of the Harbor Commission, whose input was incorporated into the design.

The results of the investigatory process were presented to City staff, including the City Manager, City Planner, Harbormasters, Chair of the Harbor Commission/Planning Board

member and Development staff. That presentation is attached at the end of this letter. The site option plan with the 9 sites and the subsequent evaluation matrix are contained within the presentation. It is important to note that while the estimates of cost are relative, they are 15 years old and a thus not relevant to today's market. Additionally, the size of the pier has direct correlation to the environmental impact. A larger pier requires additional pilings and results in additional shading of the bottom of the river. This is a much more significant consideration of the regulatory agencies in marshy areas, like site 8, as compared to the smaller rock/rubble intertidal zone at site 7.

It is also important to note that the current at site 7 is slower than further out towards the channel, resulting is easier and more controlled docking and less impacts from ice flowing in the spring runoff. This was also recognized in the consultations with the harbor masters during the site visit in 2016, where they advised "*Relocate pier further upstream and change orientation to reduce current exposure. The Harbormasters confirmed that the channel restriction located just seaward of the pier created fast currents that ran parallel to shore. Based on their knowledge of the harbor, they suggested the pier would be better rotated upstream parallel to the current and moved upstream and inshore from the Layout 1 location. This would put the pier in water with less tidal current and make docking easier and safer".* The area just seaward of site 7 is site 8.

Request for NIST application
The National Institute of Standards and Technology, NIST, was solicited for funding by UNE to construct the pier. The application is directly related to financing and it is not in any way related to regulatory permitting. The application does not seek approval of the pier design nor location.

In closing, we hope this helps to address some of the questions related to application. We are confident that our submission conforms to the required city standards and ordinances. We look forward to reviewing the Site plan Review Criteria with you in greater detail at the June 18th meeting.

Sincerely,



Alan Thibeault
Vice President for University Operations

cc: Tom Saucier, Site Design Associates
Dan Bannon, GEI

From:	Galbraith, David
To:	Alan Thibeault; Plotkin, Alexa; Patoine, Larry; Dubois, Matthew; Angers, Roch; Susan Deschambault; Deschambault, Susan; Lewis, Kayla; Beaudette, Stephen
Cc:	Center, Harry; Whitten, Nan
Subject:	EXT: UNE Research Pier
Date:	Wednesday, May 28, 2025 11:51:19 AM
Attachments:	Shoreland Zone Ordinance Relating to Piers Docks Wharfs.pdf

This email originated from outside of UNE.

All, this email was sent to me by the City Solicitor (Harry Center) late last night. In his email Harry states *"I will provide this advice/opinion to the Planning Board before the June 18, 2925 meeting and I would ask the Planning Department to please forward this email to all members of the planning board and the designated official from UNE".* As such, I am forwarding the entire email string and Harry's response.

As always, please do not respond to this email or discuss this matter with other Board members. I have also copied Alan Thibeault of UNE.

Thanks all & looking forward to seeing you all at the site walk on June 9th.
David

From: Harry Center <hcenter@woodedlaw.com>
Sent: Tuesday, May 27, 2025 8:31 PM
To: Matthew Haas <matthew1@maine.rr.com>; Whitten, Nan <Nan.Whitten@Biddefordmaine.org>
Cc: Galbraith, David <David.Galbraith@biddefordmaine.org>
Subject: RE: Public notice

> **Caution:**This is an external email. Please take care when clicking links or opening attachments. When in doubt, contact the IT Department

Mr. Hass:
Attached is the provision of the City's Shoreland Zoning Ordinance relating to "approval" of piers. There are no standards for "local knowledge"; depth, current, moorings or any other complaints by the opponents of the UNE project.
These are the standards and provisions that the City Planning Board must apply to the application.
Additionally, because this is a non-residential development, site review is also required--however, none of the standards in that provision of the City Code of Ordinances relate to telling an applicant where the location of a pier should be located.
I will provide this advice/opinion to the Planning Board before the June 18, 2925 meeting and I would ask the Planning Department to please forward this email to all members of the planning board and the designated official from UNE. I will continue to follow the law and due process requirements to all parties.
At this time, I see no basis for the City's Planning Board to deny this permit based upon the water depth at the location, the current, or any of the accusations made at the last meeting-as there are no standards within the City's Code of Ordinances/Shoreland Zoning Ordinance that would justify or support the denial of a pier based on such claims by the opponents. If someone can point to a Shoreland Zoning Ordinance provision, City land use standard or other ordinance within the City's jurisdiction to deny this request for approval,

then the Planning Board should consider any such provision and decide. Further if an opponent can point to a City Ordinance provision that allows the City to dictate the location of the pier, I will be happy to review it.
I made that statement at the meeting, in good faith, that after the Planning Board heard from the public, I would give them legal advice regarding my opinion as to the legal standards the Planning Board must apply, as many of the public comments related to issues that are not within the Planning Board's jurisdiction. However I will respond to your email now.
The Planning Board will make its decision based on the standards set forth in the attached Ordinance. I have not located any other City of Biddeford Land Use Ordinance provision related to docks, piers, wharfs and City staff has not alerted me to any others. If you or anyone else are aware of anything within the City's Code (available online at the City's website) please feel free to raise such provisions and staff and I will review them.
Thank you,
Harry B. Center, II Esq.
City Attorney

From: Matthew Haas <matthew1@maine.rr.com>
Sent: Tuesday, May 27, 2025 4:52 PM
To: Nan Whitten <Nan.Whitten@biddefordmaine.org>
Cc: David Galbraith <David.Galbraith@biddefordmaine.org>; Harry Center <hcenter@woodedlaw.com>
Subject: Re: Public notice

During the meeting near the end there was a discussion on the limits of the boards review . harry center stated he has and will issue them some guidance on the extent and limits of their review. and he said it was available to the public.

Matthew Haas
Sent from my iPhone

> On May 27, 2025, at 1:57 PM, Whitten, Nan <Nan.Whitten@biddefordmaine.org> wrote:
>
> ***Guidance, do you mean the ordinance or do you have something specific in mind?***
>
> ---
>
> **From:** matthew1@maine.rr.com <matthew1@maine.rr.com>
> **Sent:** Tuesday, May 27, 2025 1:51 PM
> **To:** Whitten, Nan <Nan.Whitten@Biddefordmaine.org>
> **Subject:** RE: Public notice
>
> **Caution:**This is an external email. Please take care when clicking links or opening attachments. When in doubt, contact the IT Department
>
> Good afternoon, Can I get copies of the guidance the planning board was

issued by city legal council?

From: "Whitten, Nan"
To: "Matthew Haas"
Cc:
Sent: Tuesday May 27 2025 7:46:38AM
Subject: RE: Public notice

Thank you Matthew, you are on the list

From: Matthew Haas <matthew1@maine.rr.com>
Sent: Thursday, May 22, 2025 6:33 PM
To: Whitten, Nan <Nan.Whitten@Biddefordmaine.org>
Subject: Re: Public notice

> **Caution:**This is an external email. Please take care when clicking links or opening attachments. When in doubt, contact the IT Department

Matthew haas
36 meeting house road
Biddeford maine
297-590-3889

Matthew Haas
Sent from my iPhone

> On May 22, 2025, at 2:34 PM, Whitten, Nan <Nan.Whitten@biddefordmaine.org> wrote:
>
> ***Happy to do so. May I please have your full name and mailing address?***
>
> ***Thank you for reaching out***
>
> ***Nan Whitten***
> ***City of Biddeford***
> ***Office Manager***
> ***Planning & Development***
> ***207-284-9115***

From: matthew1@maine.rr.com <matthew1@maine.rr.com>
Sent: Thursday, May 22, 2025 2:32 PM
To: Whitten, Nan <Nan.Whitten@Biddefordmaine.org>
Subject: Public notice

Caution: This is an external email. Please take care when clicking links or opening attachments. When in doubt, contact the IT Department

Please add me to the public notice roster for the UNE pier project. Thank you

City of Biddeford, Maine

The Office of
City Manager
James A. Bennett
Email: james.bennett@biddefordmaine.org

August 19, 2024

University of New England
11 Hills Beach Road
Biddeford, Maine 04005

Attention: Mr. Alan Thibeault, VP of University Operations

RE: Notice to Proceed with External Reviews

Dear Mr. Thibeault,

On August 9, 2024, I received written clarification from Mr. Wayne Duffett, PE of TECAssociates that UNE's proposed Research Pier and Float System has complied with City Code 74-35 subsections (c) 1-10. Those sections are as follows:

(1) A formal boundary survey that has been documented at the Registry of Deeds.
(2) A copy of the boundary survey showing the littoral zone, established by extending property lines seaward.
(3) A location map from a portion of a USGS topographic map or coastal chart.
(4) Distance to navigable channels or any federal navigation project.
(5) Mean high- and low-water boundary.
(6) A plan view on the drawing(s) that shows the location and dimensions of the applicant's structure(s) in relation to the applicant's property lines.
(7) A typical cross section/side view of the applicant's structures on the drawing(s).
(8) Evidence that owners of abutting properties have been notified of the applicant's intended project.
(9) Evidence that the 1) Maine Historic Preservation Commission, 2) Aroostook Band of Micmac, 3) Passamaquoddy Tribe of Indians: Pleasant Point; Indian Township, 4) Houlton Band of Maliseet Indians, and 5) Penobscot Indian Nation have been notified of the applicant's intended project.
(10) Completed applications to the Army Corps of Engineers, Department of Environmental Protection and Biddeford Code Enforcement. A regulatory permit from the Saco River Corridor Commission may also be required in some instances.

Based on this information and in harmony with my earlier communications, please consider this as formal notification from the City of Biddeford that the application has been found in compliance with

the above mention City Code. That finding allows the application to proceed in the next steps of the review process; namely formal review by all agencies except those that are part of the City of Biddeford. After each and all of those processes are complete, the City will move forward with the final review(s) by agents and Committees of the City.

While I don't believe it is necessary, let me empathically state that this communication does not in any form, imply that the City has in any way made a determination that the location submitted has been approved. Said approval will considered after completion of all process and in compliance with applicable laws, regulations. This includes all local ordinances.

Please feel free to reach out to me if you have any questions

Sincerely,

James A. Bennett
City Manager

CC: Biddeford Mayor and City Council

University of New England Pier
Biddeford, Maine



Baker Design Consultants
Civil, Marine & Structural Engineering
7 Spruce Road, Freeport, ME 04032
b.baker@bakerdesignconsultants.com

January 26, 2016

Site Mapping & Plans

NOAA CHART

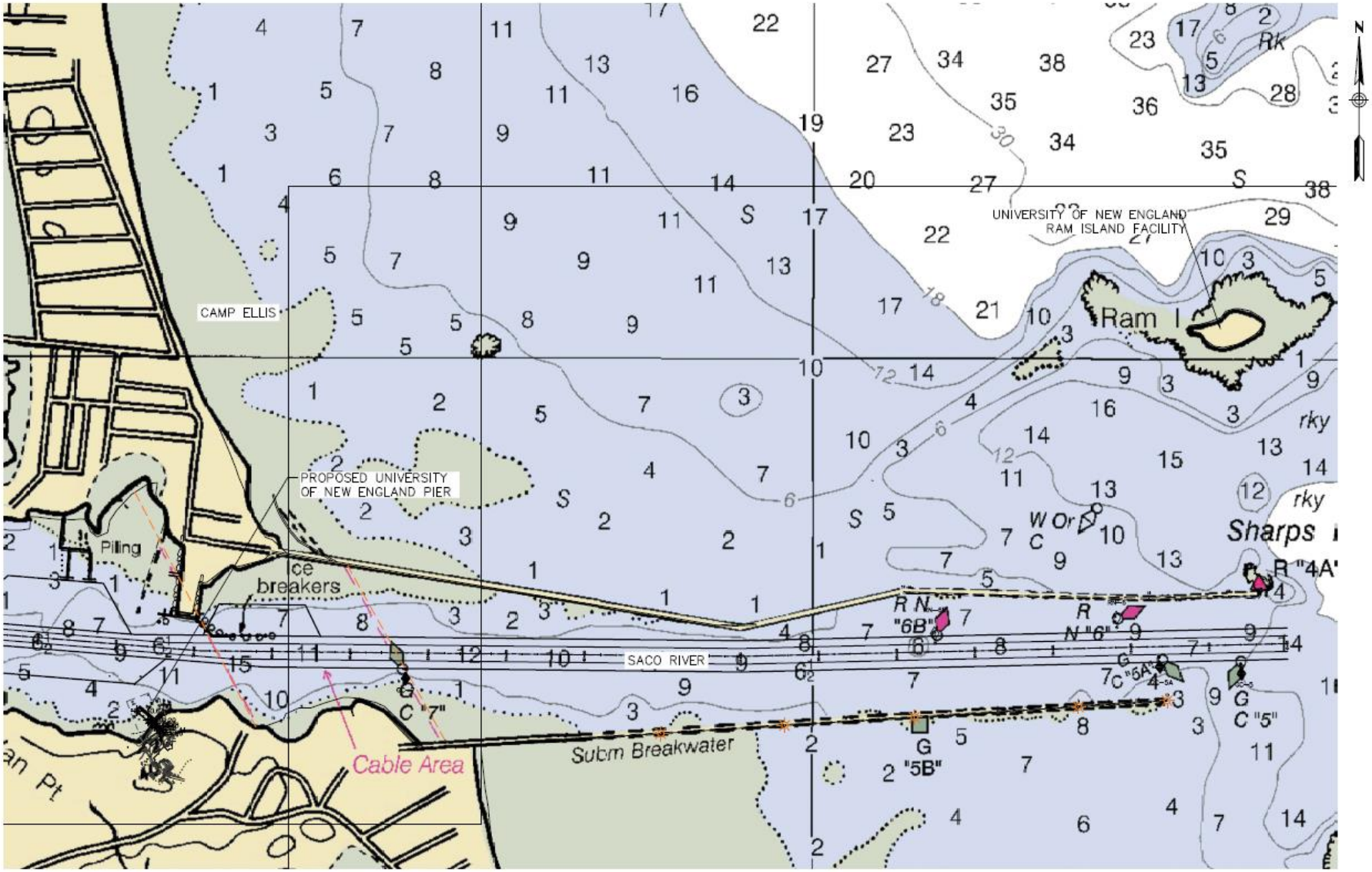

PLAN

0 150 300 450 900

BAKER DESIGN CONSULTANTS
Civil, Marine, and Structural Engineering

NO.	DATE	INT.
A	6-25-15	BJB
PROGRESS REVIEW SUBMISSION		

DESIGNED BY: JJC
DRAWN BY:
CHECKED BY: BJB
SCALE: AS SHOWN

SHEET TITLE: PROJECT VICINITY PLAN
PROJECT: UNIVERSITY OF NEW ENGLAND UNE MSC WATERFRONT BIDDEFORD, MAINE

DATE: FEBRUARY 2015
CONTRACT NO. 15-07
SHEET NO. SK-1
REV. A

Site Selection Study

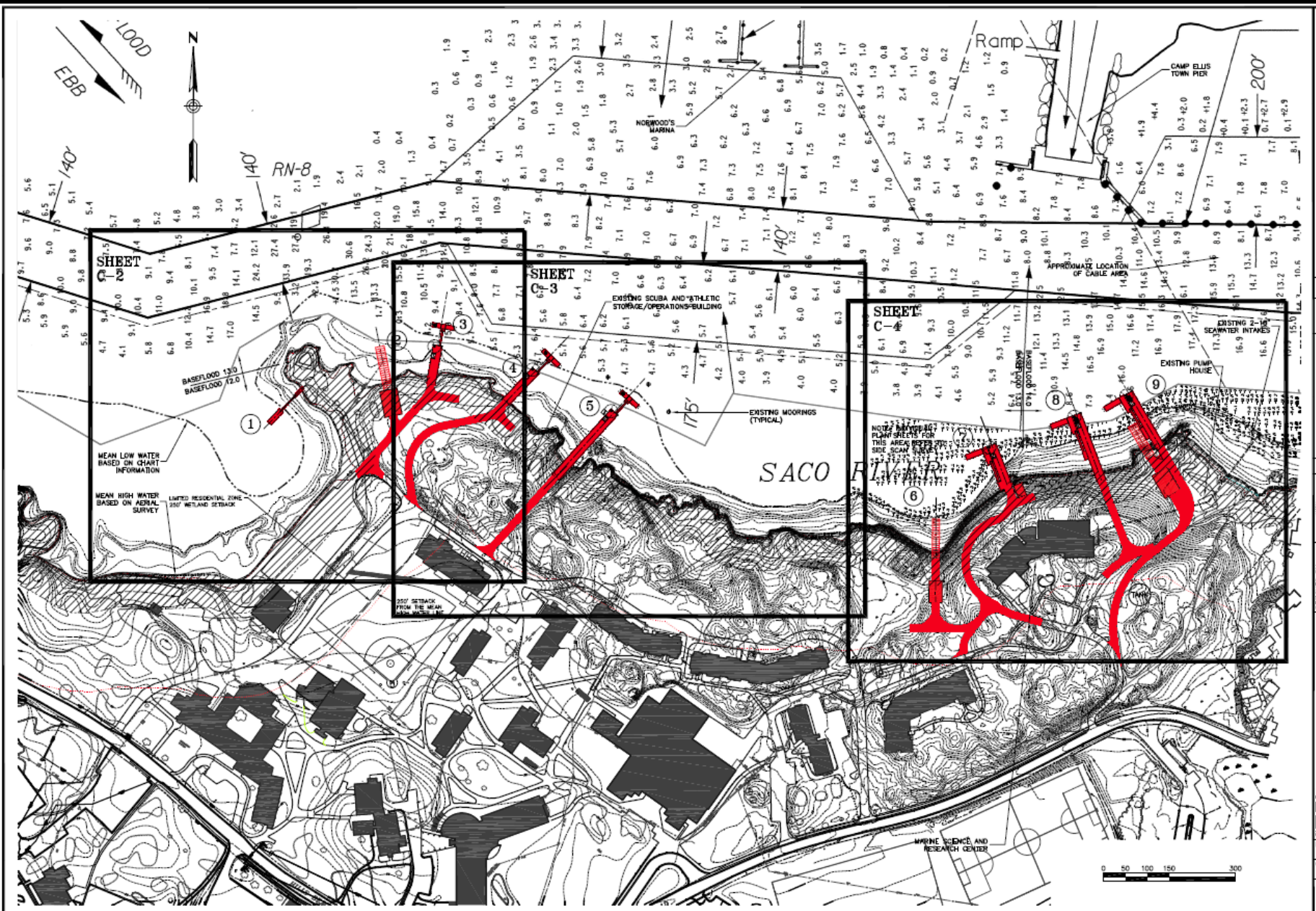

Site Selection Study

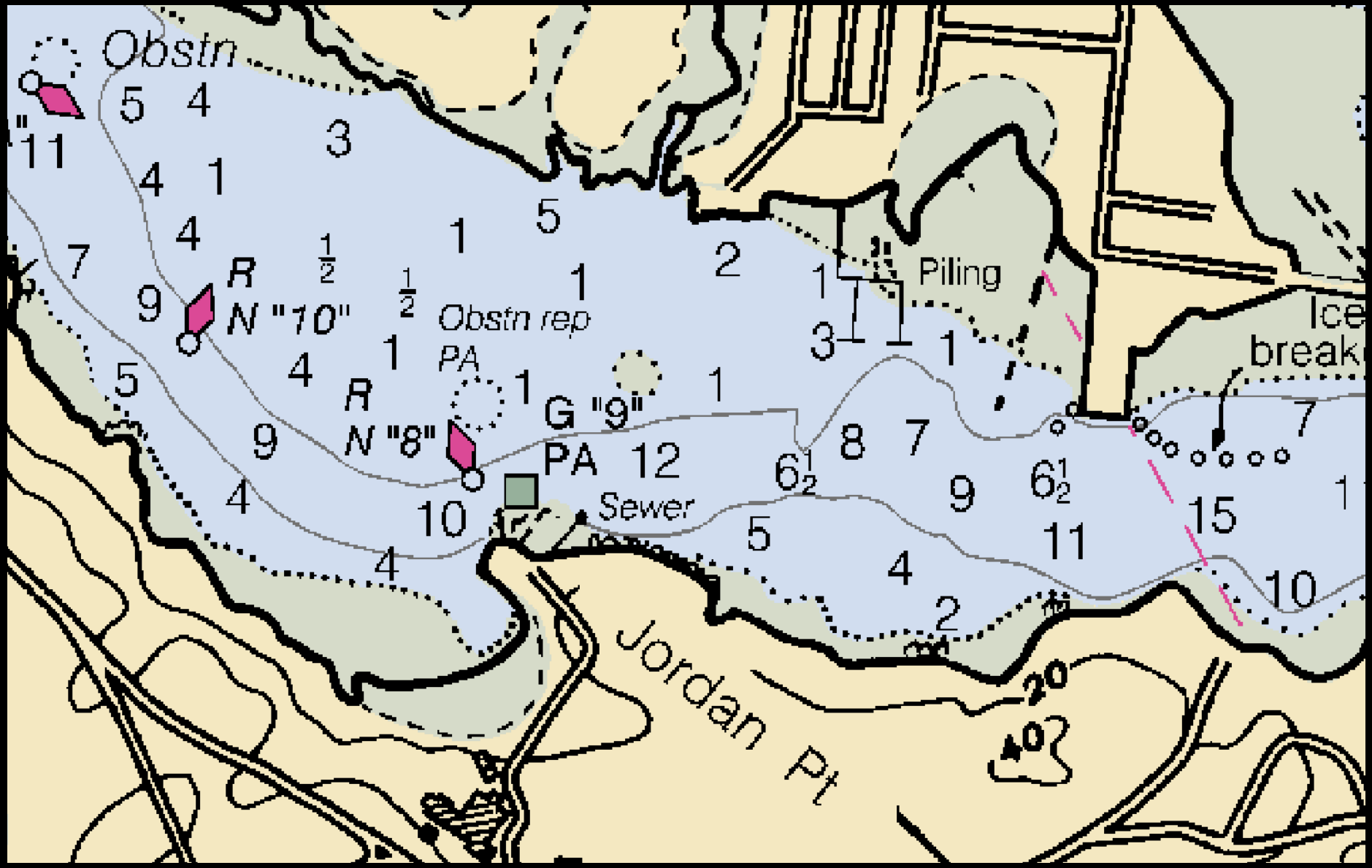

Site Selection Study

TABLE 1 SITE DEVELOPMENT CRITERIA		SITE 1 Existing Pier Improved	SITE 2 New Boat House & Ramp	SITE 3. New Pier with gangway extension	SITE 4 New Pier with gangway extension	SITE 5 Replacement Pier- gangway ext	SITE 6 New Boat House & Ramp	SITE 7 New Pier to deep water	SITE 8 New Pier to deep water	SITE 9 New Pier, Boat House & Ramp.
General Description		Improvements to existing shallow access site	No Pier. Dedicated launching &storage.	Dedicated Pier with Vehicle Access	Dedicated Pier with Vehicle Access	Replaces existing shallow access at recreation site	Steep access . No Pier. Dedicated launching & storage.	Dedicated Pier with Vehicle Access	Dedicated Pier with Vehicle Access	Dedicated Pier , Boathouse and Ramp.
Key Feature		Protected tidal Cove. Seasonal icing prevents year-round use	Tidal ramp requires hydraulic trailer rental or purchase for vessel. Floats installed on ramp to facilitate use.	Floats and Gangway removed for winter. Limited access to pier at Mid to high tide.	Floats and Gangway removed for winter. Limited access to pier at Mid to high tide.	Limited access to pier at Mid to high tide. Shared with recreational program. Pier length dictated by shallow water.	Tidal ramp requires hydraulic trailer rental or purchase for vessel. Floats installed on ramp to facilitate use.	Provides Pier to deep water. Natural protection behind escarpment. Close to Marine Science Bldg.	Avoids any blasting adjacent to the mammal tank. Close to Marine Science Bldg.	Shorefront topography allows for Pier and boat ramp. Close proximity to Neighboring properties.
Primary Affiliation with Marine Science Program		INFREQUENT Use	DEDICATED Waterfront	DEDICATED Waterfront	DEDICATED Waterfront	SHARED with Recreation	DEDICATED Waterfront	DEDICATED Waterfront	DEDICATED Waterfront	DEDICATED Waterfront
Type of Access		Seasonal	Tidal Ramp	Limited Year-round	Limited Year-round	Limited Year-round	Tidal Ramp	Year-round	Year-round	Year-round
Shared Users		UNE Staff/Students	None	None	None	UNE Recreation	None	None	None	None
LOCATION (Sheet Reference)		D-1	D-2	D-3	D-4	D-5	D-6	D-7	D-8	D-9
Distance from Marine Science Ctr	LF	2000	1500	1500	1250	1150	400	200	250	300
Setback from ACOE Channel	LF	Jordon Cove	200	175	215	450	500	350	310	250
Distance to Abutting Property	LF	600	800	1000	1075	1300	650	600	400	250
Base Flood Elev (FEMA '84-NGVD)	NGVD	12.0 (Zone V2)	13.0 (Zone V2)	13.0 (Zone V2)	13.0 (Zone V2)	13.0 (Zone V2)	13.0 (Zone V2)	13.0 (Zone V2)	14.0 (Zone V2)	14.0 (Zone V2)
Wind Exposure		W to NW	NW to N to E	NW to N to E	NW to N to E	NW to N to E	NW to N to NE	NW to N to E	NW to N to E	NW to N to E
Pier Deck Elevation	NGVD	12.0	13.0	13.0	13.0	13.0	13.0	13.0	14.0	14.0
MLW Depth at Float	FT	0-2	NA	6	6	3	NA	6	6	6
PIER GEOMETRY		$16,500.00	$0.00	$202,000.00	$224,000.00	$444,000.00	$0.00	$334,200.00	$444,200.00	$400,200.00
Length of Pier	FT	25	NA	90	100	200	NA	115	165	145
Width of Pier	FT	6	NA	20	20	20	NA	20	20	20
Jib Crane	EA	NA	NA	1	1	1	NA	1	1	1
Wave Barrier	LF	NA	NA	NA	NA	NA	NA	60	60	60
Transfer Pen (Pier Mounted)	EA	NA	NA	NA	NA	NA	NA	1	1	1
Pier Building (12x8 Marine Related)	SF	NA	NA	96	96	96	NA	96	96	96
SITE IMPROVEMENTS		$2,000.00	$45,950.00	$48,000.00	$55,000.00	$34,500.00	$37,500.00	$143,000.00	$144,000.00	$171,000.00
Access Road 16-ft w/turnaround	LF	NA	285	400	500	350	250	600	400	700
Ledge Removal	LF	NA	100	NA	NA	NA	NA	400	400	500
Utility Route (estimate ?)	LF	NA	285	400	500	350	250	300	400	700
Shore Support Building	SF	NA	NA	NA	NA	NA	NA	600	600	600
Landscaping	LS	0.1	1	1	1	0.5	1	1	1	1
FLOAT SYSTEM		$36,700.00	$0.00	$43,000.00	$43,000.00	$43,000.00	$0.00	$60,900.00	$60,900.00	$60,900.00
Gangway	FT	50	NA	40	40	40	NA	50	50	50
Unit Float Length	FT	40	NA	20	20	20	NA	40	40	40
Unit Float Width	FT	12	NA	10	10	10	NA	12	12	12
No. of Floats	EA	1	NA	3	3	3	NA	2	2	2
Fishery Cage (in Float)	EA	NA	NA	1	1	1	NA	1	1	1
BOAT RAMP		$0.00	$107,500.00	$0.00	$0.00	$0.00	$98,600.00	$0.00	$0.00	$84,600.00
Length of Ramp	FT	NA	90	NA	NA	NA	90	NA	NA	70
Width of Ramp	FT	NA	20	NA	NA	NA	20	NA	NA	20
Guide Piles	EA	NA	5	NA	NA	NA	4	NA	NA	4
Unit Float Length	FT	NA	20	NA	NA	NA	20	NA	NA	20
Unit Float Width	FT	NA	8	NA	NA	NA	8	NA	NA	8
No. of Floats	EA	NA	5	NA	NA	NA	4	NA	NA	4
BOAT HOUSE		$0.00	$460,000.00	$0.00	$0.00	$0.00	$460,000.00	$0.00	$0.00	$460,000.00
Setback from shore	FT	NA	25	NA	NA	NA	75	NA	NA	50
No. of Vessel Bays	EA	NA	2	NA	NA	NA	2	NA	NA	2
Footprint SF	SF	NA	2400	NA	NA	NA	2400	NA	NA	2400
Floor Slab Elevation	NGVD	NA	13	NA	NA	NA	13	NA	NA	13
Hydraulic Trailer	Ea	NA	1	NA	NA	NA	1	NA	NA	1

Site Selection Study

TABLE 2 REGULATORY CONSIDERATIONS	SITE 1 Existing Pier Improved	SITE 2 New Boat House & Ramp	SITE 3. New Pier with gangway extension	SITE 4 New Pier with gangway extension	SITE 5 Replacement Pier- gangway ext	SITE 6 New Boat House & Ramp	SITE 7 New Pier to deep water	SITE 8 New Pier to deep water	SITE 9 New Pier, Boat House & Ramp.
PERMIT AGENCIES									
ACOE Dept of the Army	☑	☑	☑	☑	☑	☑	☑	☑	☑
ME DEP NRPA/Site Location	☑	☑	☑	☑	☑	☑	☑	☑	☑
ME DOC Submerged Lands	NA	NA	☑	☑	☑	NA	☑	☑	☑
Saco River Corridor	☑	☑	☑	☑	☑	☑	☑	☑	☑
City of Biddeford	☑	☑	☑	☑	☑	☑	☑	☑	☑
HABITAT IMPACTS									
Upland	Minimal Change to existing access and grading.	Marine related facility (Boathouse and ramp) constructed within 75-ft setback.	Minor grading to create road. Turn around within 75-ft setback.	Road follows natural gradient. Turn around within 75-ft setback.	Access road improves existing route.	Marine related facility (Boathouse and ramp) constructed within 75-ft setback.	Major grading to create access road within 75-ft setback.	Major grading to create access road within 75-ft setback.	Marine related facility (Boathouse and ramp) constructed within 75-ft setback.
Shoreline	Stub Pier Constructed. Minimal shading	Cut/fill to create boathouse pad and ramp gradient.	Pier extends to low water.	Pier extends to low water.	New pier replaces existing facility	Cut/fill to create boathouse pad and ramp gradient.	Pier extends to Deep water with L-shaped float system.	Pier extends to Deep water with L-shaped float system.	Pier extends to Deep water with L-shaped float system.
Benthic	Characterization Required. Float sits on seabed at extreme low tide.	Intertidal impacts associated with ramp construction.	Shading from new floats.	Pier extends to MLW. Shading from floats	Pier extends to MLW. Shading from floats	Intertidal impacts associated with ramp construction.	Shading from pier/floats.	Shading from pier/floats.	Shading from pier/floats.
Water Quality	Shading from float.	Buffer to control ramp/building runoff.	Fishery Cage.	Fishery Cage.	Fishery Cage.	Buffer to control ramp/building runoff.	Fishery cage and mammal pen.	Fishery cage and mammal pen.	Runoff, fishery cage and mammal pen.
ADA ISSUES									
Pier	ADA access to Pier head	15% grade required to launch boats.	ADA access to Pier head	ADA access to Pier head	ADA access to Pier head	15% grade required to launch boats.	ADA access to Pier head	ADA access to Pier head	ADA access to Pier head
Gangway	Does not meet ADA Guidelines for length (80-ft). ADA width and handrail	NA	Does not meet ADA Guidelines for length (80-ft). ADA width and handrail	Does not meet ADA Guidelines for length (80-ft). ADA width and handrail	Does not meet ADA Guidelines for length (80-ft). ADA width and handrail	NA	Does not meet ADA Guidelines for length (80-ft). ADA width and handrail	Does not meet ADA Guidelines for length (80-ft). ADA width and handrail	Does not meet ADA Guidelines for length (80-ft). ADA width and handrail
VISUAL IMPACT									
From River Corridor	On Jordon Cove. Not directly exposed to the river corridor.	Building and Ramp will be visible from the river corridor.	Pier extends into river corridor.	Pier extends into river corridor.	Pier extends into river corridor.	Building and Ramp will be visible from the river corridor.	Pier extends into river corridor.	Pier extends into river corridor.	Building and Ramp and Pier visible from the river corridor.
SPECIAL CONSIDERATIONS									
Noise	No change from current conditions.	No change from current conditions.	Minimal Impact.	Minimal Impact.	Minimal Impact.	Minimal Impact.	Minimal Impact.	Minimal Impact.	Considers proximity to Neighboring properties.
Navigation	No Impact to existing Mooring Field.	No Impact to existing Mooring Field.	Approximately 2 moorings displaced.	Approximately 2 moorings displaced.	Approximately 2 moorings displaced.	Approximately 2 moorings displaced.	Approximately 2 moorings displaced.	Approximately 2 moorings displaced.	Approximately 2 moorings displaced.
Water Quality	No change from current conditions.	No change from current conditions.	Minimal or No Impact.	Minimal or No Impact.	Minimal or No Impact.	Minimal or No Impact.	Minimal or No Impact.	Minimal or No Impact.	Minimal or No Impact.
Winter Icing	Not an issue with seasonal facility	Boat ramp use will be impacted by ice.	Pier must resist ice buildup.	Pier must resist ice buildup.	Pier must resist ice buildup.	Boat ramp use will be impacted by ice.	Pier must resist ice buildup.	Pier must resist ice buildup.	Pier must resist ice buildup.
River Current	Not directly on river.	Cross current with some protection from Jordan Point.	Cross current.	Cross current.	Cross current.	Maximum setback from Channel.	Cost estimate includes wave barrier for protection	Cost estimate includes wave barrier for protection	Cost estimate includes wave barrier for protection
Mitigation	Unknown	Unknown	Unknown	Unknown	Unknown	Unknown	Unknown	Unknown	Unknown

Site Selection Study

TABLE 3 SITE CONCEPT COST ESTIMATE			SITE 1 Existing Pier Improved	SITE 2 New Boat House & Ramp	SITE 3. New Pier with gangway extension	SITE 4 New Pier with gangway extension	SITE 5 Replacement Pier- gangway ext	SITE 6 New Boat House & Ramp	SITE 7 New Pier to deep water	SITE 8 New Pier to deep water	SITE 9 New Pier, Boat House & Ramp.
Description	Unit Cost	Unit									
Mob Demobilization		5%	NA	$37,655	$17,985	$19,765	$32,011	$36,590	$33,030	$39,843	$72,229
Bonds & Insurance		1%	NA	$3,766	$1,799	$1,977	$3,201	$3,659	$3,303	$3,984	$7,223
PIER											
Fixed Pier	$110.00	SF	$16,500.00	NA	$198,000.00	$220,000.00	$440,000.00	NA	$253,000.00	$363,000.00	$319,000.00
Jib Crane	$4,000.00	EA	NA	NA	$4,000.00	$4,000.00	$4,000.00	NA	$4,000.00	$4,000.00	$4,000.00
Wave Barrier	$1,000.00	LF	NA	NA	NA	NA	NA	NA	$60,000.00	$60,000.00	$60,000.00
Transfer Pen	$10,000.00	LS	NA	NA	NA	NA	NA	NA	$10,000.00	$10,000.00	$10,000.00
Pier Building	$75.00	LF	NA	NA	NA	NA	NA	NA	$7,200.00	$7,200.00	$7,200.00
SITE IMPROVEMENTS											
Access Road 16-ft	$20.00	LF	NA	$5,700.00	$8,000.00	$10,000.00	$7,000.00	$5,000.00	$12,000.00	$8,000.00	$14,000.00
Ledge Removal	$60.00	LF	NA	$6,000.00	NA	NA	NA	NA	$24,000.00	$24,000.00	$30,000.00
Utility Route (est ?)	$50.00	LF	NA	$14,250.00	$20,000.00	$25,000.00	$17,500.00	$12,500.00	$15,000.00	$20,000.00	$35,000.00
Shore Support Bldg	$120.00	SF	NA	NA	NA	NA	NA	NA	$72,000.00	$72,000.00	$72,000.00
Landscaping	$20,000.00	LS	$2,000.00	$20,000.00	$20,000.00	$20,000.00	$10,000.00	$20,000.00	$20,000.00	$20,000.00	$20,000.00
FLOAT SYSTEM											
Gangway	$350.00	EA	$17,500.00	NA	$14,000.00	$14,000.00	$14,000.00	NA	$17,500.00	$17,500.00	$17,500.00
Floats	$40.00	SF	$19,200.00	NA	$24,000.00	$24,000.00	$24,000.00	NA	$38,400.00	$38,400.00	$38,400.00
Fishery Cage (in Float)	$5,000.00	EA	NA	NA	$5,000.00	$5,000.00	$5,000.00	NA	$5,000.00	$5,000.00	$5,000.00
BOAT RAMP											
Boat Ramp	$35.00	SF	NA	$63,000.00	NA	NA	NA	$63,000.00	NA	NA	$49,000.00
Guide Piles	$2,500.00	EA	NA	$12,500.00	NA	NA	NA	$10,000.00	NA	NA	$10,000.00
Floats	$40.00	SF	NA	$32,000.00	NA	NA	NA	$25,600.00	NA	NA	$25,600.00
BOAT HOUSE											
Footprint SF	$150.00	SF	NA	$360,000	NA	NA	NA	$360,000	NA	NA	$360,000
Hydraulic Trailer	$100,000.00	Ea	NA	$100,000	NA	NA	NA	$100,000	NA	NA	$100,000
Construction Subtotal			$55,200	$654,871	$312,784	$343,742	$556,712	$636,349	$574,433	$692,928	$1,256,152
Cost Adjustment for existing site@		40%	-$22,080								
Contingency @		15%	$8,280	$98,231	$46,918	$51,561	$83,507	$95,452	$86,165	$103,939	$188,423
Construction Total			**$41,400**	**$753,101**	**$359,701**	**$395,303**	**$640,219**	**$731,801**	**$660,598**	**$796,867**	**$1,444,574**
Survey and Testing											
Geotechnical Investigation		Est.	$0	$5,000	$15,000	$15,000	$15,000	$5,000	$15,000	$15,000	$20,000
Environmental Survey		Est.	$750	$10,000	$10,000	$10,000	$10,000	$5,000	$10,000	$10,000	$10,000
Topographic Survey/Bathymetry		Est.	$1,500	$1,500	$2,500	$2,500	$2,500	$1,500	$2,500	$2,500	$2,500
Permitting		Est.	w/design services	$25,000	$25,000	$25,000	$25,000	$25,000	$25,000	$25,000	$25,000
Design Development		10%	$4,140	$75,310	$35,970	$39,530	$64,022	$73,180	$66,060	$79,687	$144,457
Bid Phase Services		0.5%	$207	$3,766	$1,799	$1,977	$3,201	$3,659	$3,303	$3,984	$7,223
Construction Admin @ Monitoring		2%	$828	$15,062	$7,194	$7,906	$12,804	$14,636	$13,212	$15,937	$28,891
Consultant Services Total			**$7,425**	**$135,638**	**$97,463**	**$101,913**	**$132,527**	**$127,975**	**$135,075**	**$152,108**	**$238,072**
PROJECT BUDGET			**$48,000**	**$888,000**	**$457,000**	**$497,000**	**$772,000**	**$859,000**	**$795,000**	**$948,000**	**$1,682,000**

Preferred Site (#7)

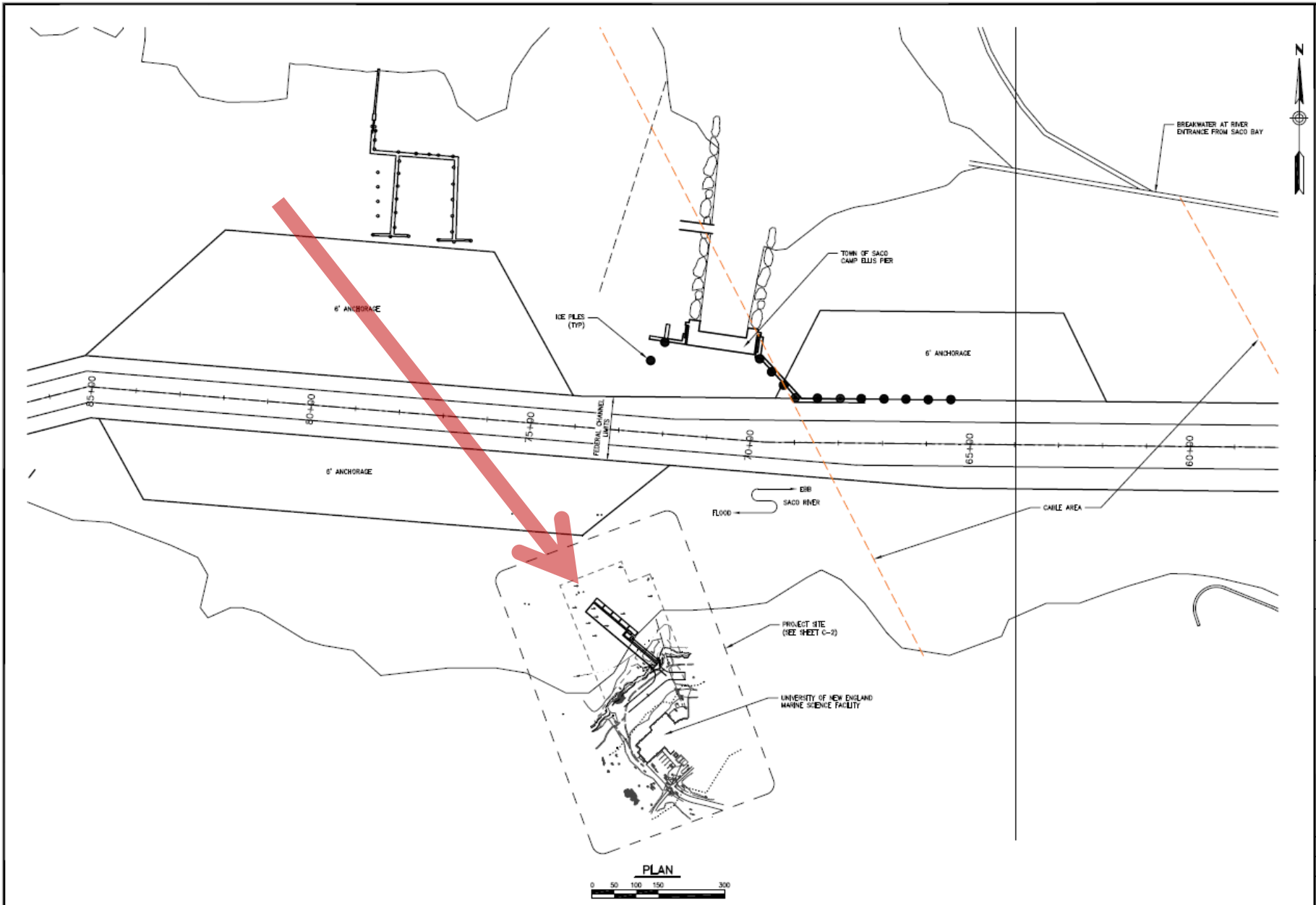

Pier Site Plan

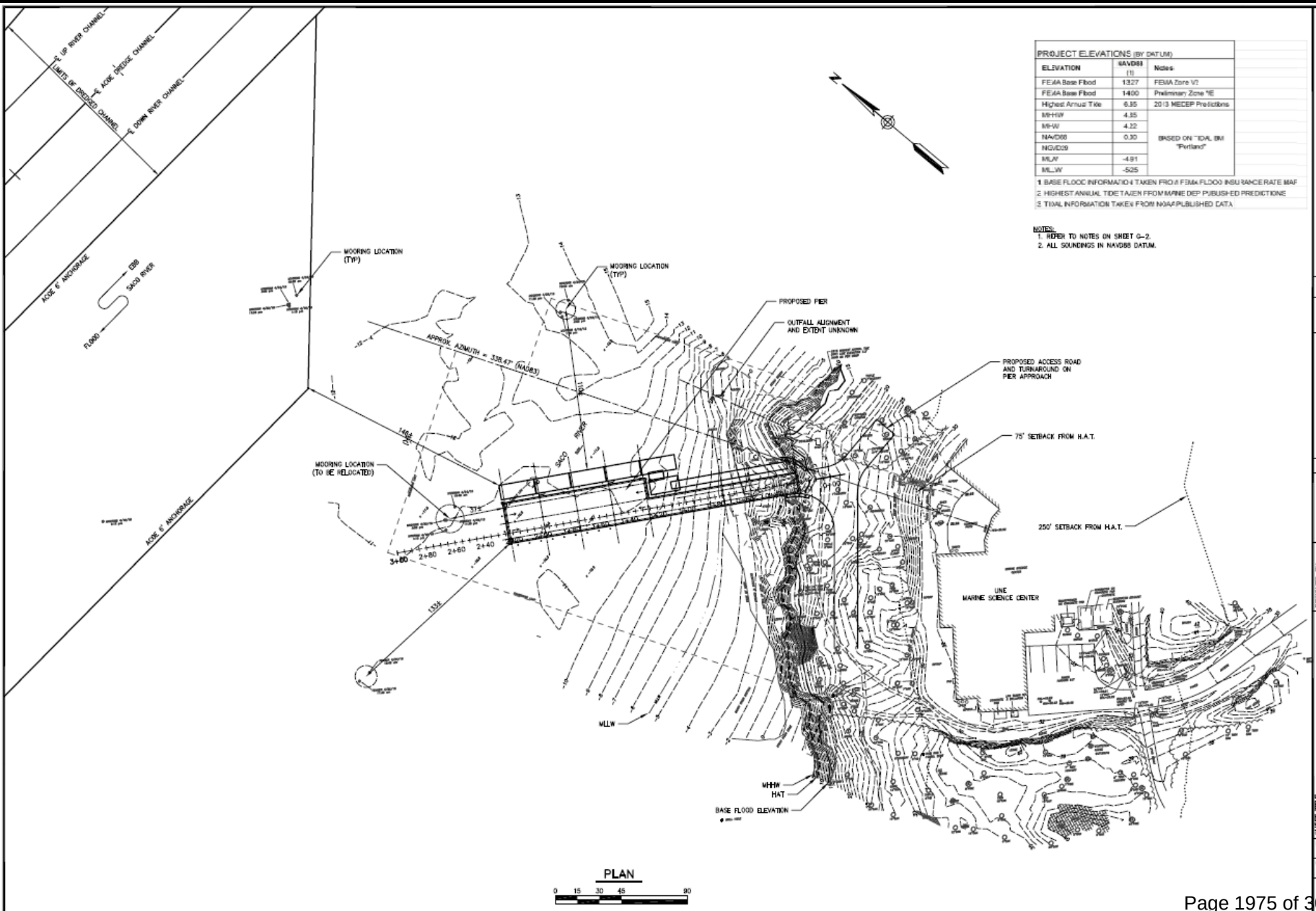

Pier Site Plan - Impacts

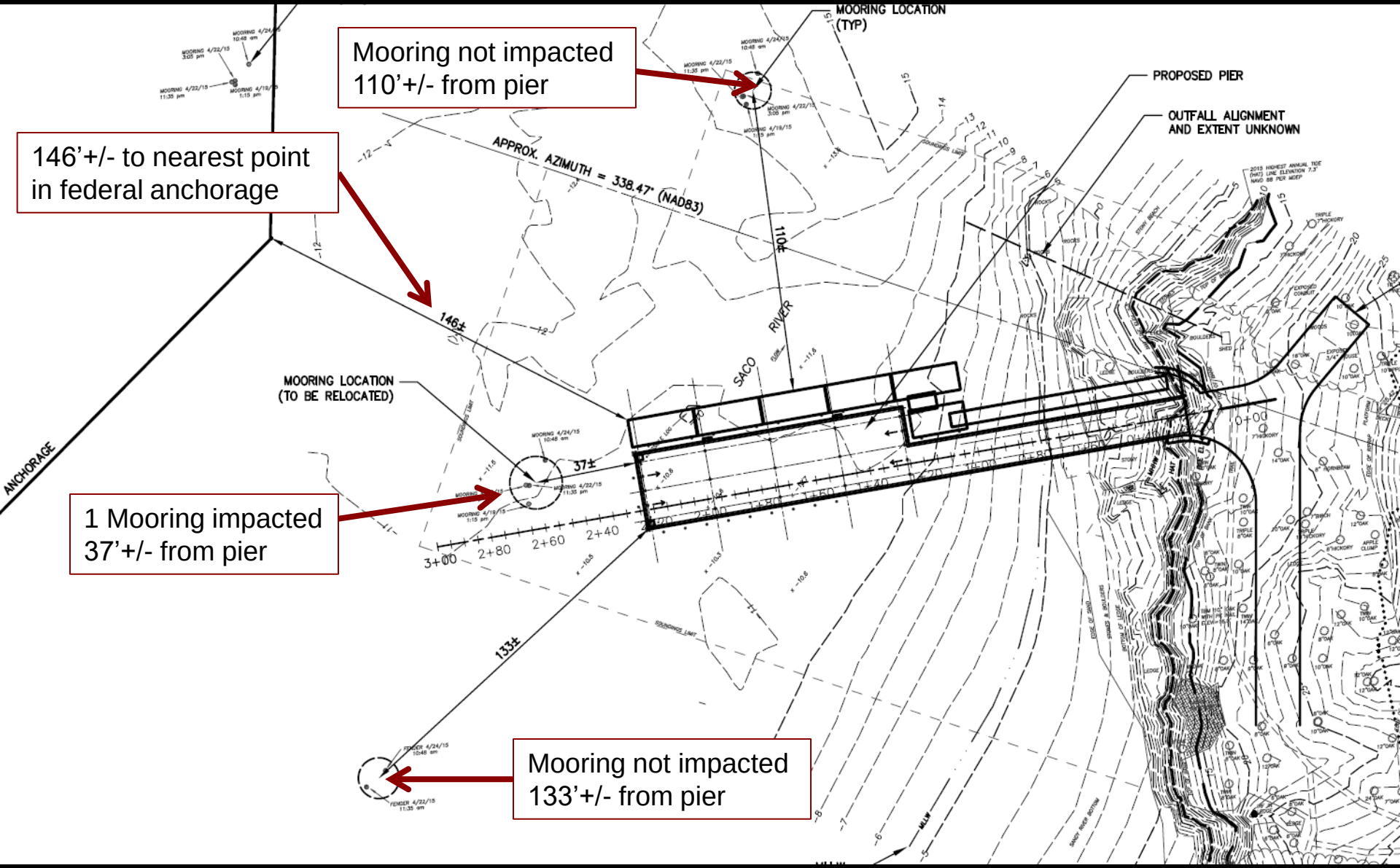

Pier Plan & Elevation

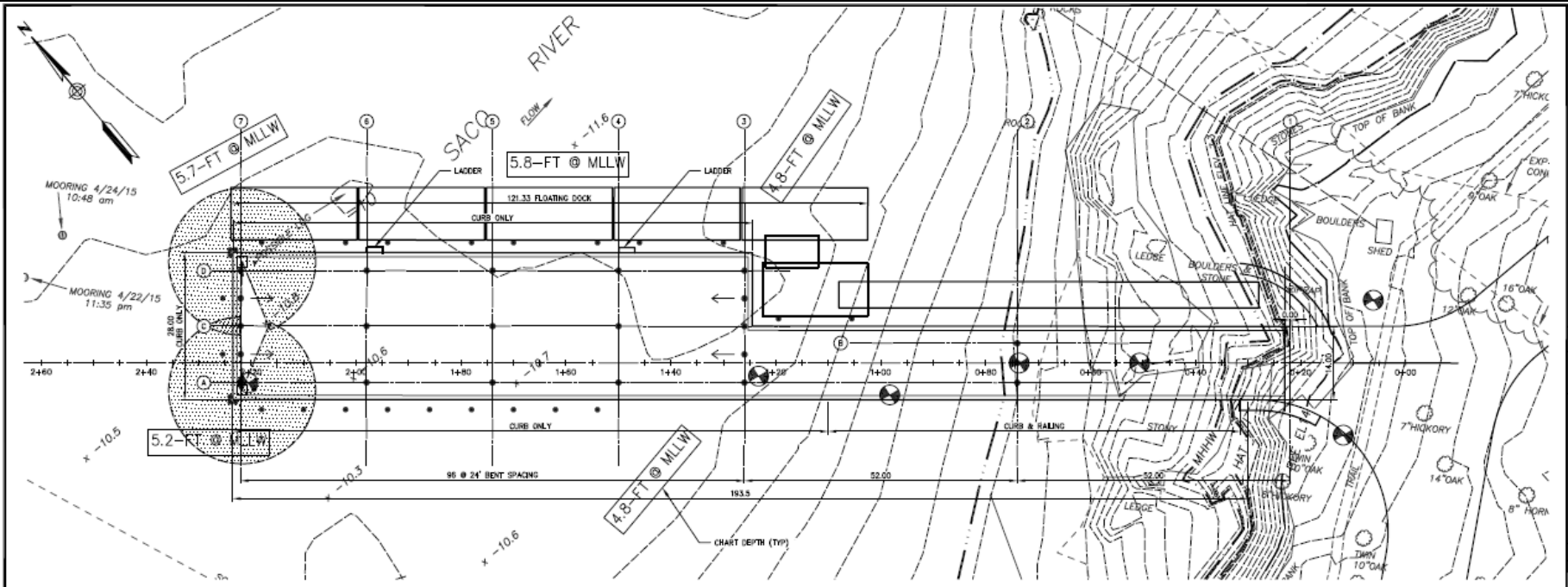

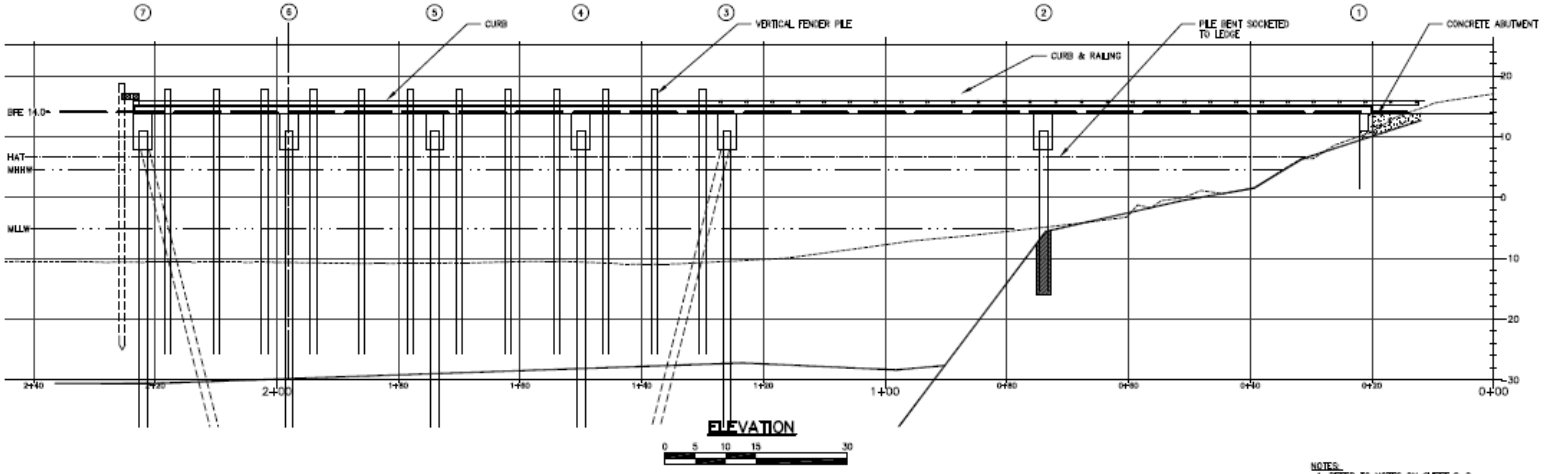

NOTES:
1. REFER TO NOTES ON SHEET G-2.
2. ALL SURVEY SOUNDINGS IN NAVD88 DATUM. CHART DEPTHS ARE NOTED.

BAKER DESIGN CONSULTANTS
Civil, Marine, and Structural Engineering
7 Spruce Road • Freeport • Maine • (H20) • 207-865-4724 • email@bakerdesignconsultants.com

NO.	REVISION / SUBSTRUCTURE	DATE	INT.
D	REVISED SUBSTRUCTURE	12-4-15	BJB
C	REVISED LAYOUT	9-15-15	BJB
B	PROGRESS REVIEW	7-22-15	BJB
A	PROGRESS REVIEW	6-25-15	BJB
	SUBMISSION		

DESIGNED BY: JJC
DRAWN BY: BJB
CHECKED BY:
SCALE: AS SHOWN

SHEET TITLE: PIER PLAN & ELEVATION
PROJECT: UNIVERSITY OF NEW ENGLAND UNE MSC WATERFRONT BIDDEFORD, MAINE
DATE: FEBRUARY 2015
CONTRACT NO. 15-07
SHEET NO. S-1
REV. D

Aerial Photos


UNE PIER SITE
September 2014
Legend
0000
Red Oak Ln
N
400 ft
Google earth

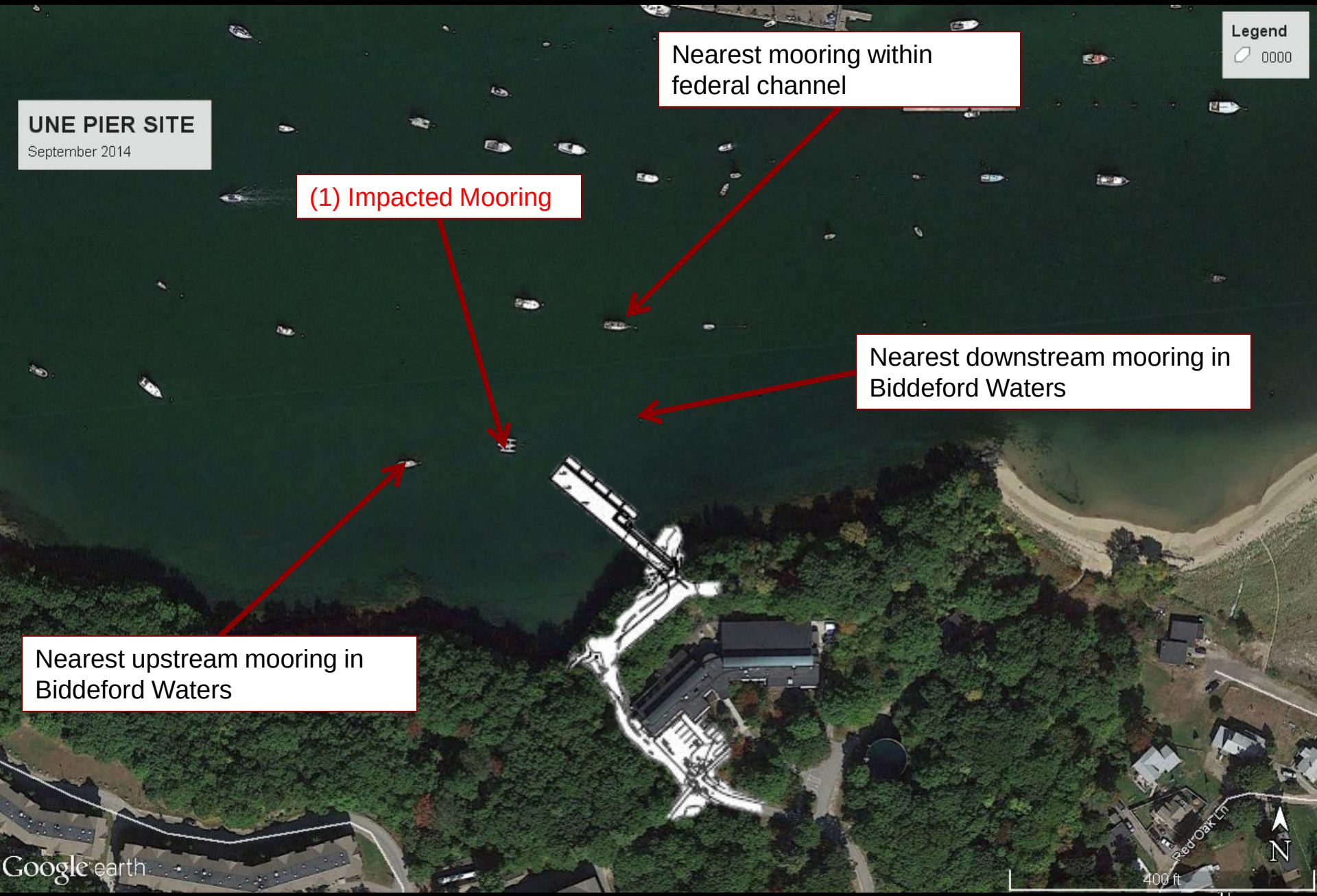
UNE PIER SITE
September 2014
Legend
0000
Nearest mooring within federal channel
(1) Impacted Mooring
Nearest downstream mooring in Biddeford Waters
Nearest upstream mooring in Biddeford Waters
Red Oak Ln
N
400 ft
Google earth

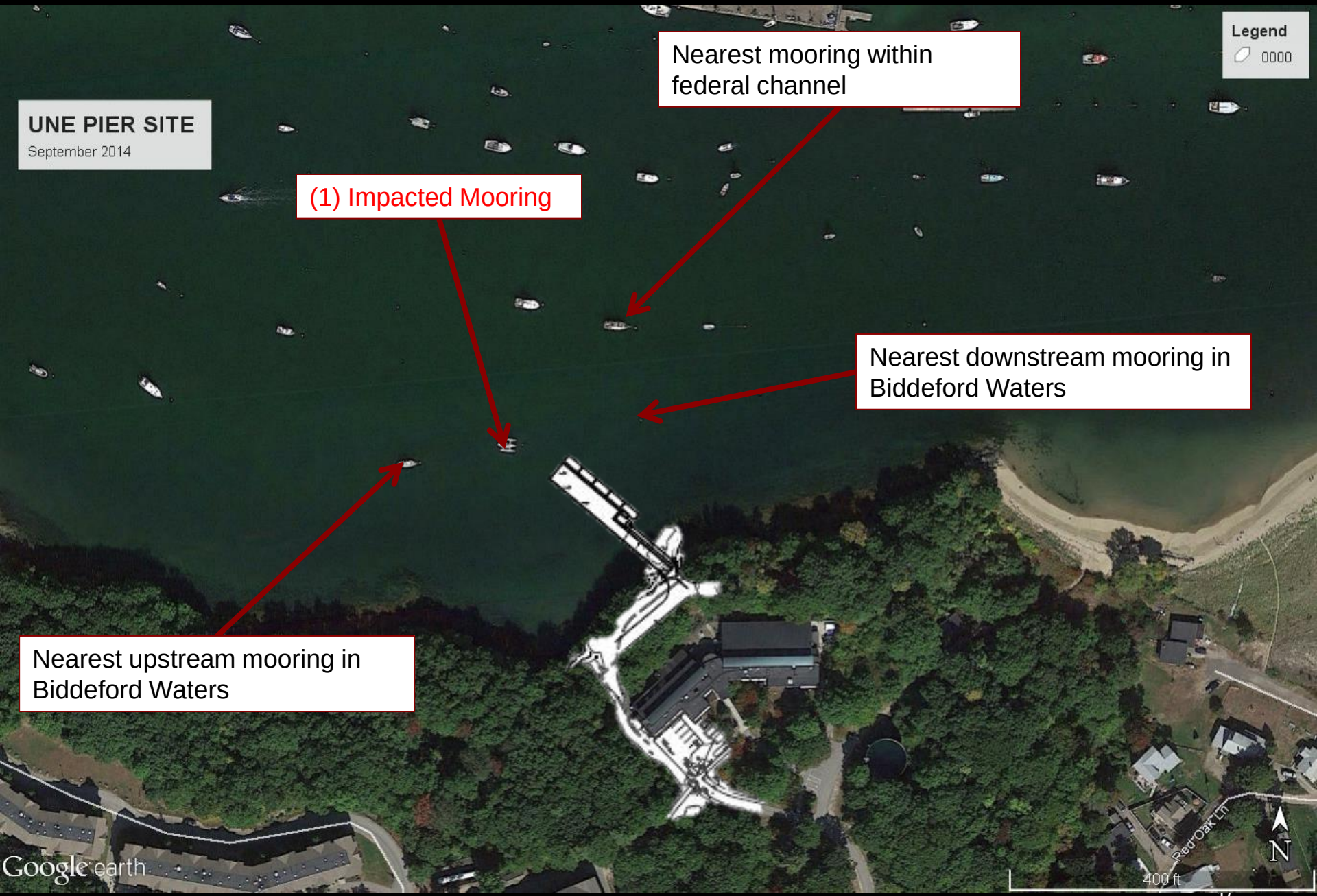
UNE PIER SITE
September 2014
Legend
0000
Nearest mooring within federal channel
(1) Impacted Mooring
Nearest downstream mooring in Biddeford Waters
Nearest upstream mooring in Biddeford Waters
Red Oak Ln
N
400 ft
Google earth


UNE PIER SITE
September 2013
Legend
0000
Red Oak Ln
N
400 ft
Google earth


UNE PIER SITE
May 2012
Legend
0000
Red Oak Ln
N
400 ft
Google earth


UNE PIER SITE
April 2012
Legend
0000
Red Oak Ln
N
400 ft
Google earth


UNE PIER SITE
November 2011
Legend
0000
Red Oak Ln
N
400 ft
Google earth


UNE PIER SITE
May 2010
Legend
0000
Red Oak Ln
N
400 ft
Google earth


UNE PIER SITE
September 2007
Legend
0000
Red Oak Ln
N
400 ft
Google earth


Legend
0000
UNE PIER SITE
October 2006
Red Oak Ln
N
400 ft
Google earth


UNE PIER SITE
April 2006
Legend
0000
Red Oak Ln
N
400 ft
Google earth

Site Photos


Approximate Pier Location
Photo Date: 11/9/2015

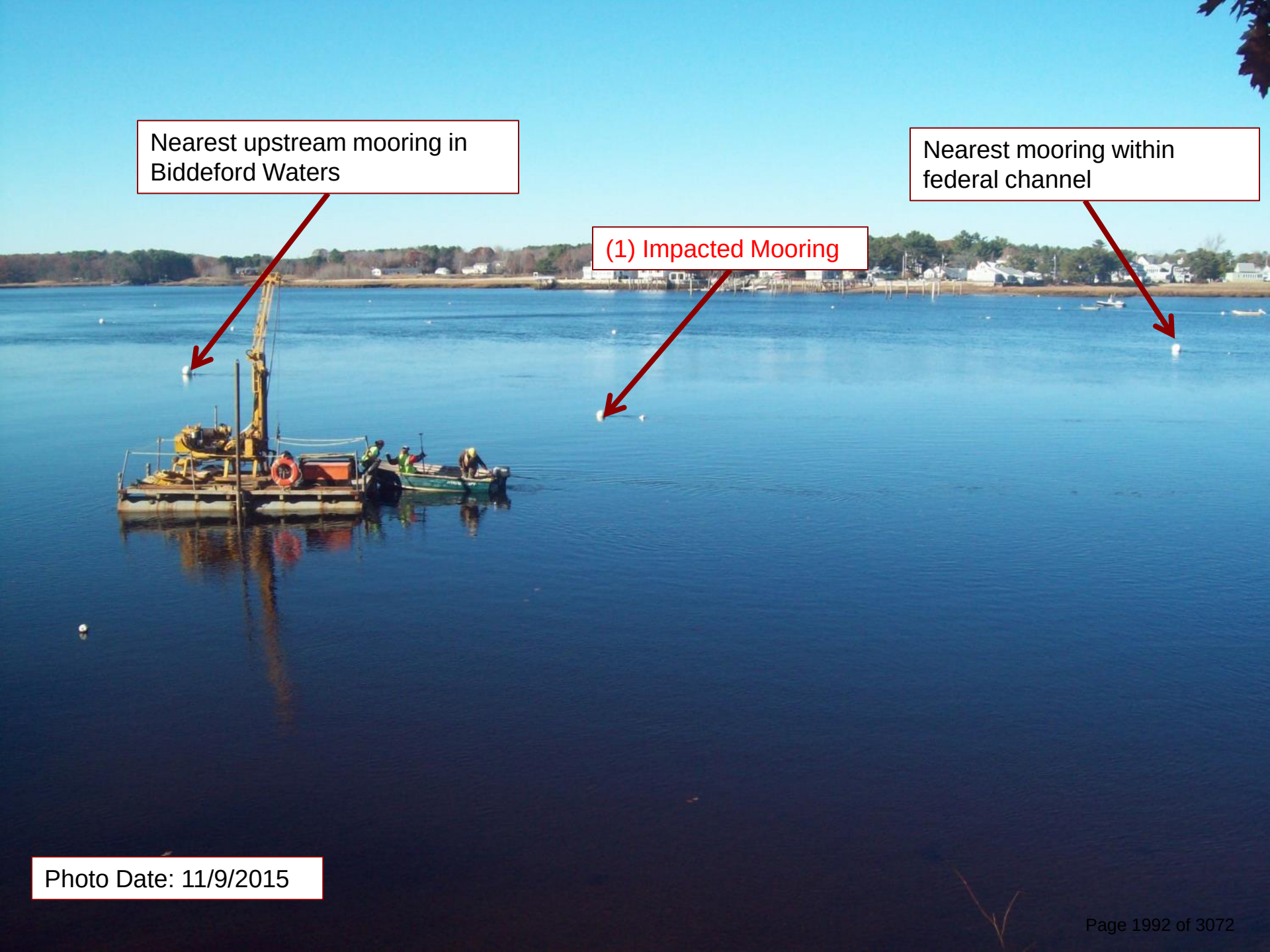
Nearest upstream mooring in Biddeford Waters
(1) Impacted Mooring
Nearest mooring within federal channel
Photo Date: 11/9/2015

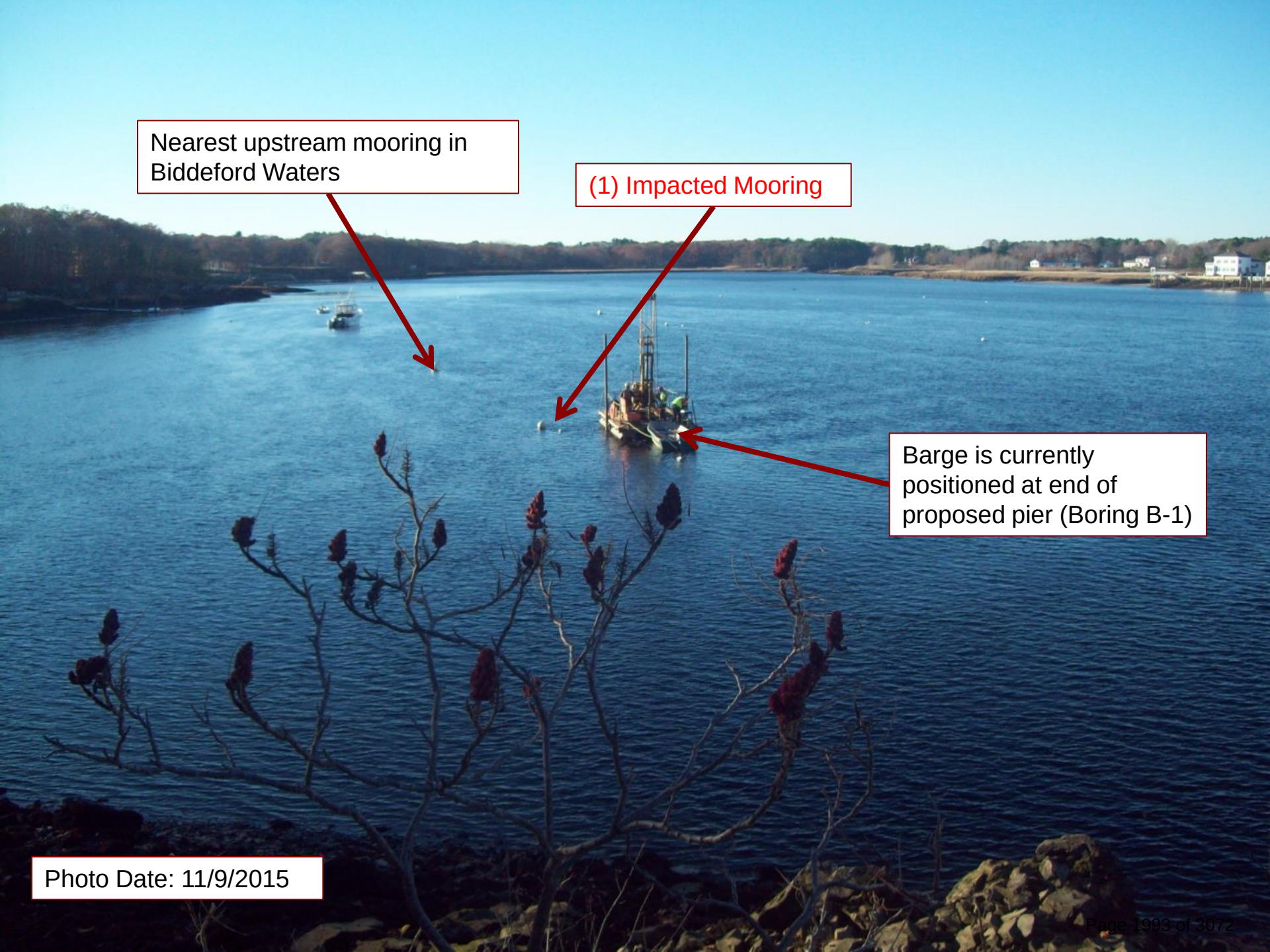
Nearest upstream mooring in Biddeford Waters
(1) Impacted Mooring
Barge is currently positioned at end of proposed pier (Boring B-1)
Photo Date: 11/9/2015


Nearest downstream mooring in Biddeford Waters
Photo Date: 11/9/2015

Tidal & Current Study

Source:

Saco River and Camp Ellis Beach Section 111 Shore Damage Mitigation Study, Appendix C – Data Collection and Modeling Report, prepared by Woods Hole Group and Aubrey Consulting for the US Army Corps of Engineers, October 2006

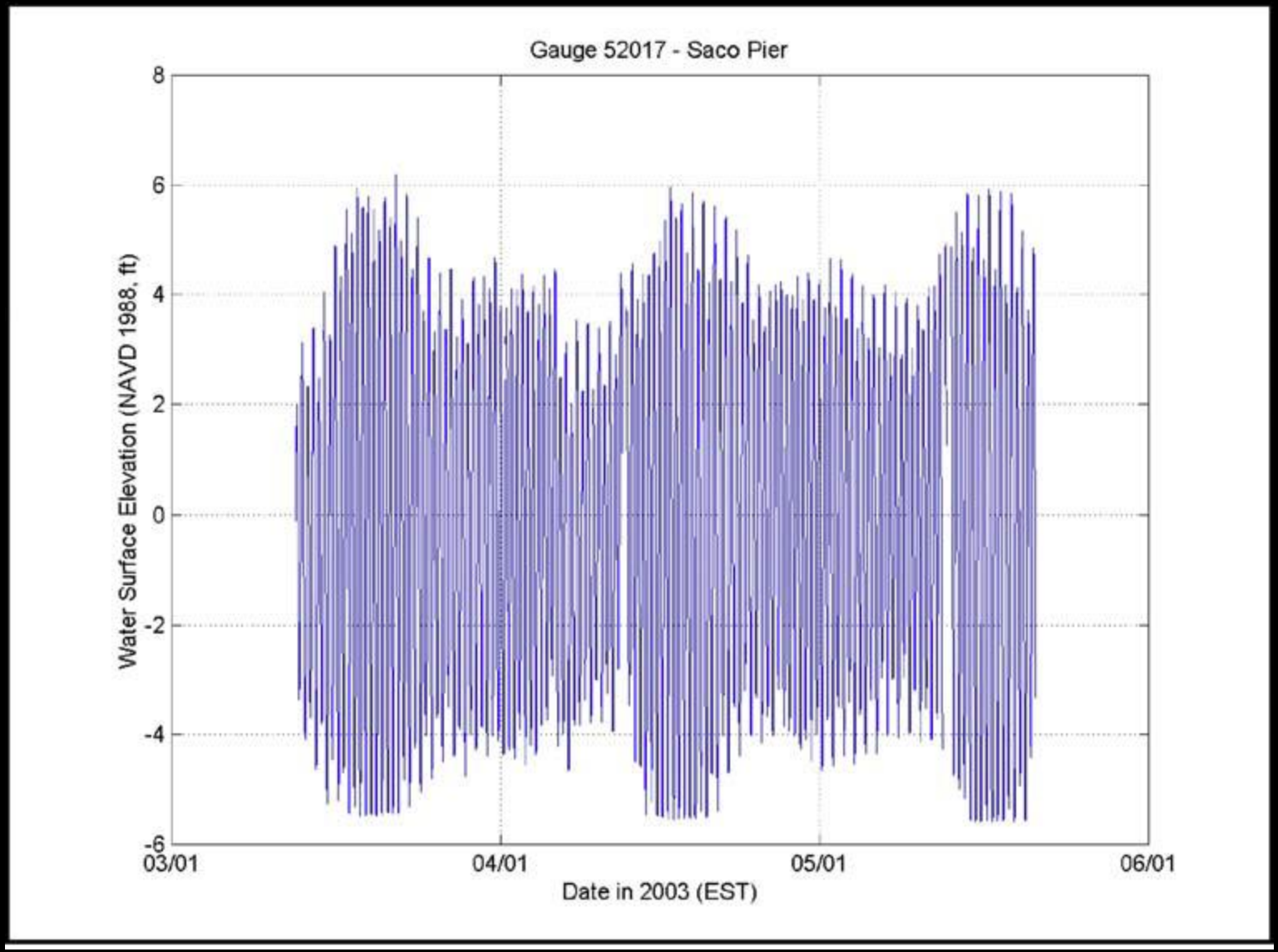
Gauge 52017 - Saco Pier
Water Surface Elevation (NAVD 1988, ft)
8
6
4
2
0
-2
-4
-6
03/01
04/01
05/01
06/01
Date in 2003 (EST)

PROJECT ELEVATIONS (BY DATUM)

ELEVATION	NAVD88 (ft)	Notes
FEMA Base Flood	13.27	FEMA Zone V2
FEMA Base Flood	14.00	Preliminary Zone VE
Highest Annual Tide	6.65	2013 MEDEP Predictions
MHHW	4.65	BASED ON TIDAL BM "Portland"
MHW	4.22	
NAVD88	0.00	
NGVD29		
MLW	-4.91	
MLLW	-5.25	

1. BASE FLOOD INFORMATION TAKEN FROM FEMA FLOOD INSURANCE RATE MAP
2. HIGHEST ANNUAL TIDE TAKEN FROM MAINE DEP PUBLISHED PREDICTIONS
3. TIDAL INFORMATION TAKEN FROM NOAA PUBLISHED DATA

Observations suggest that this location on the Saco River at times sees higher highs and lower lows than the Portland gage for a given tide cycle, possibly due to river influence.

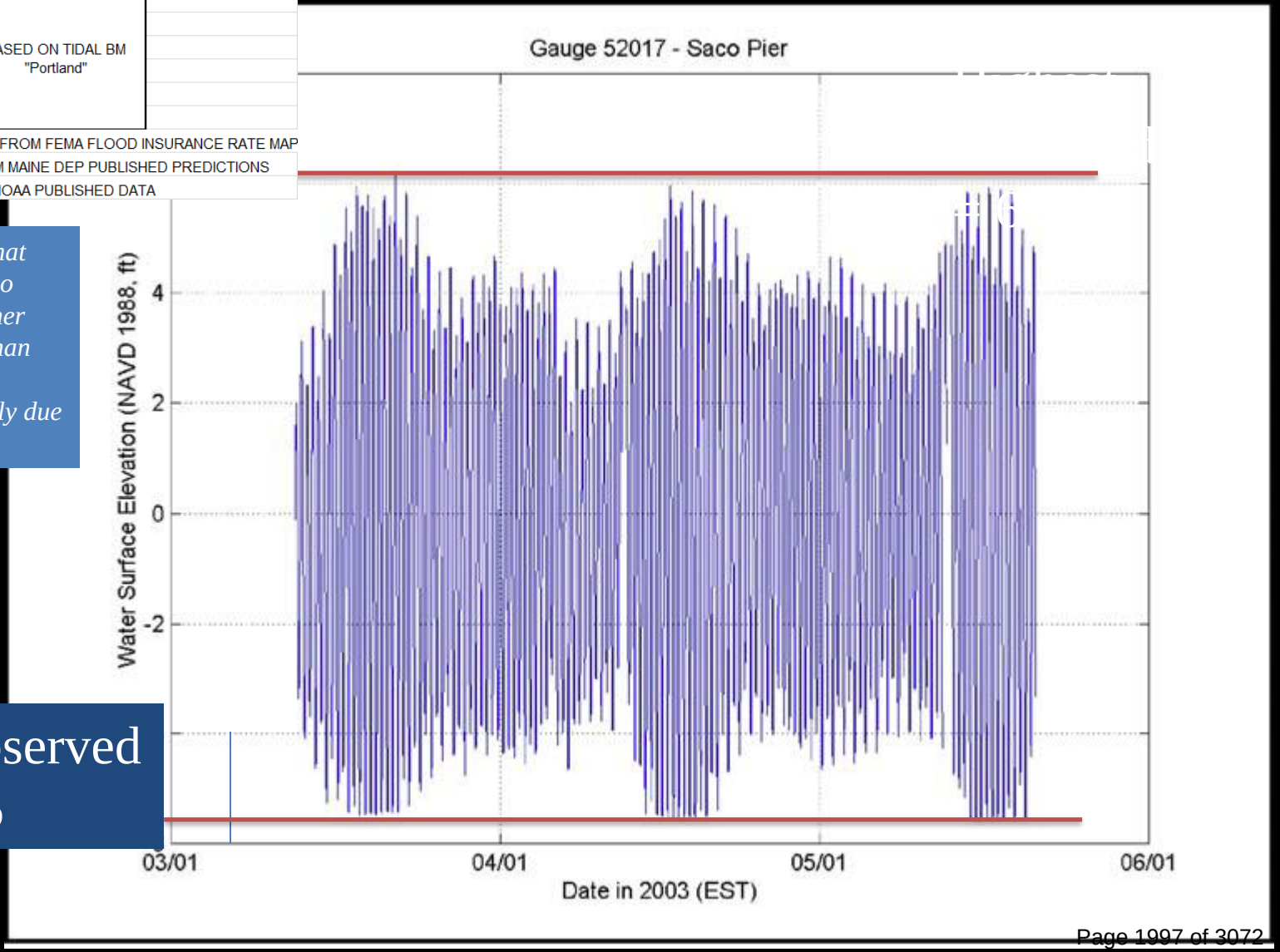

Lowest Observed Tide = -5.6

Table 6-1. Survey dates, locations, repeat interval, and temporal coverage of the ADCP transects.

Location	Transect	Date	Repeat Internal	# of Transects
Inland Jetty	1	May 14	1.5 hrs	9
North Jetty (E-W)	2	May 14	1.5 hrs	9
North Jetty (W-E)	3	May 14	1.5 hrs	6
Alongshore	4	May 14	1.5 hrs	5
Shore to end North Jetty	5	May 14	1.5 hrs	6
North Jetty to South Jetty	6	May 14	1.5 hrs	9
Jettied Channel	7	May 14	1.0 hrs during low tide	2

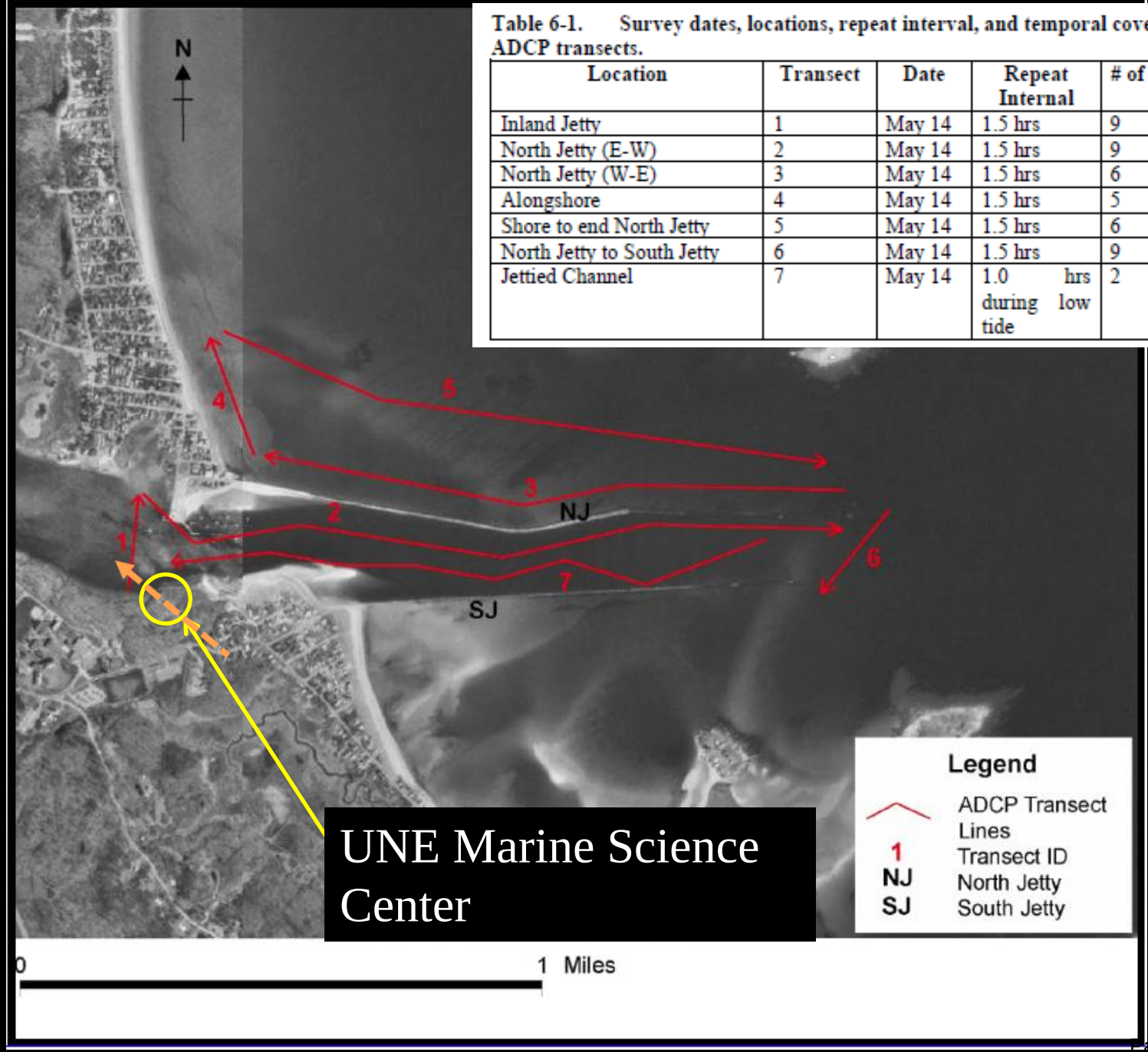

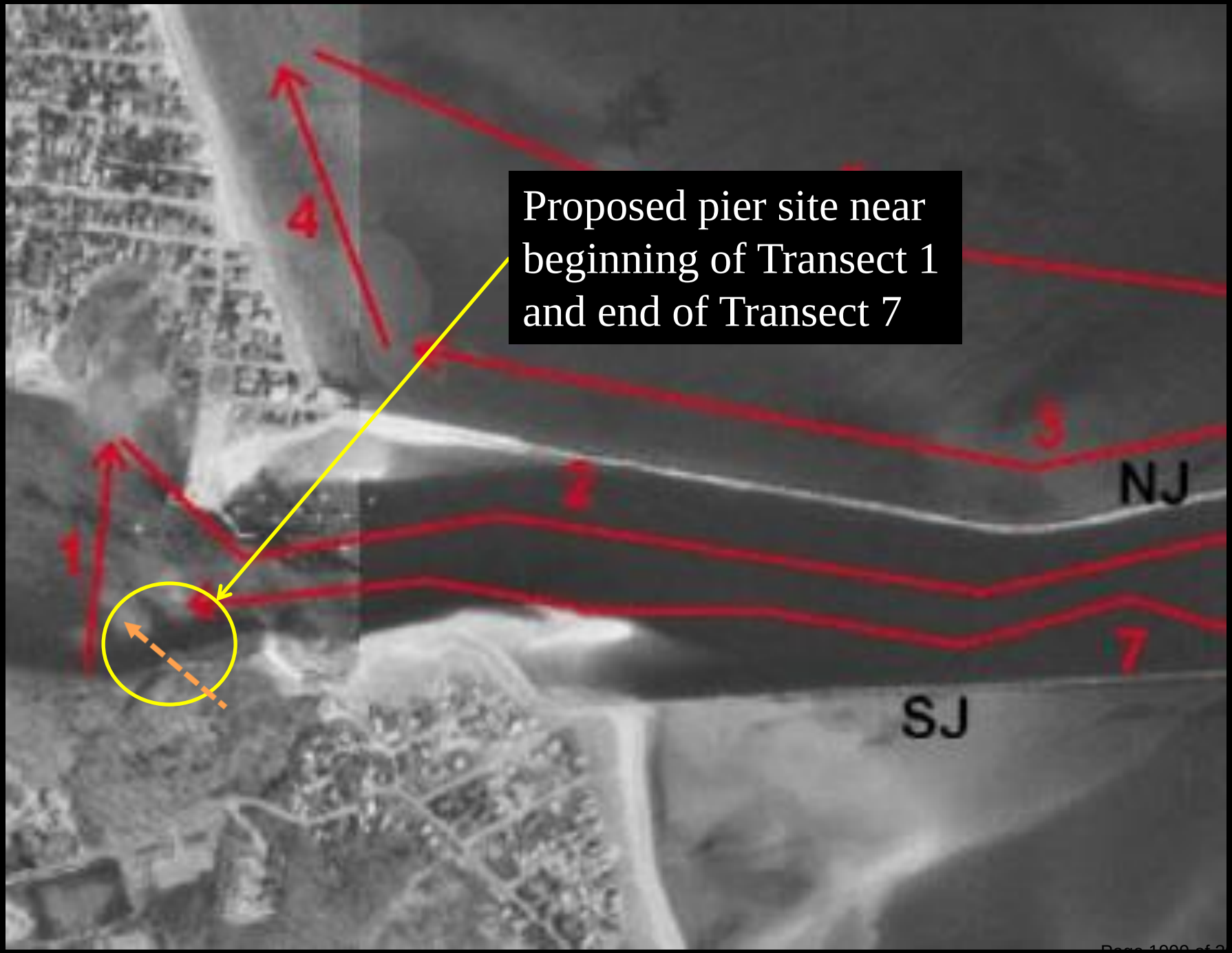
Proposed pier site near beginning of Transect 1 and end of Transect 7
NJ
SJ
1
4
3
7

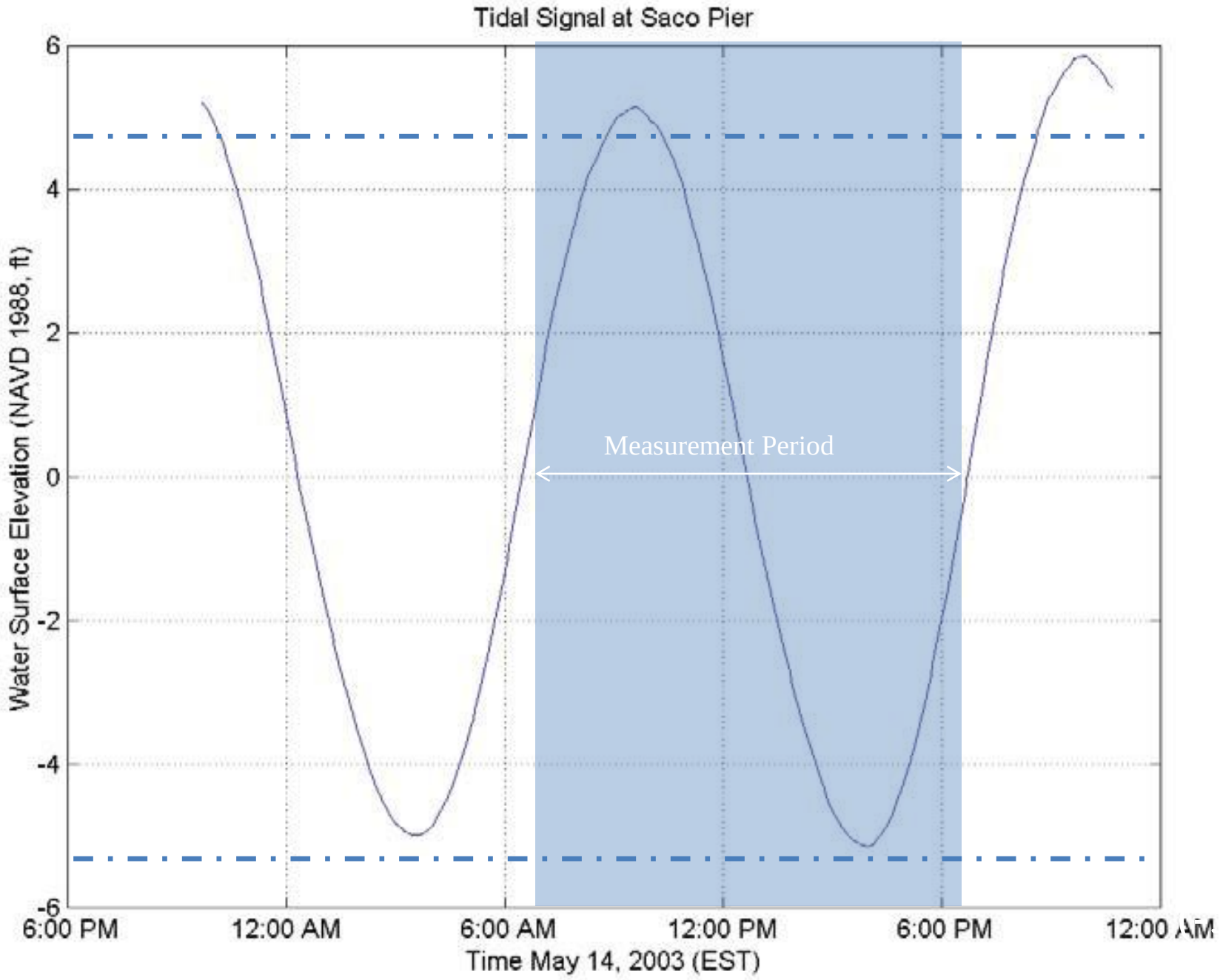
Tidal Signal at Saco Pier
Water Surface Elevation (NAVD 1988, ft)
6
4
2
0
-2
-4
-6
Measurement Period
6:00 PM
12:00 AM
6:00 AM
12:00 PM
6:00 PM
12:00 AM
Time May 14, 2003 (EST)

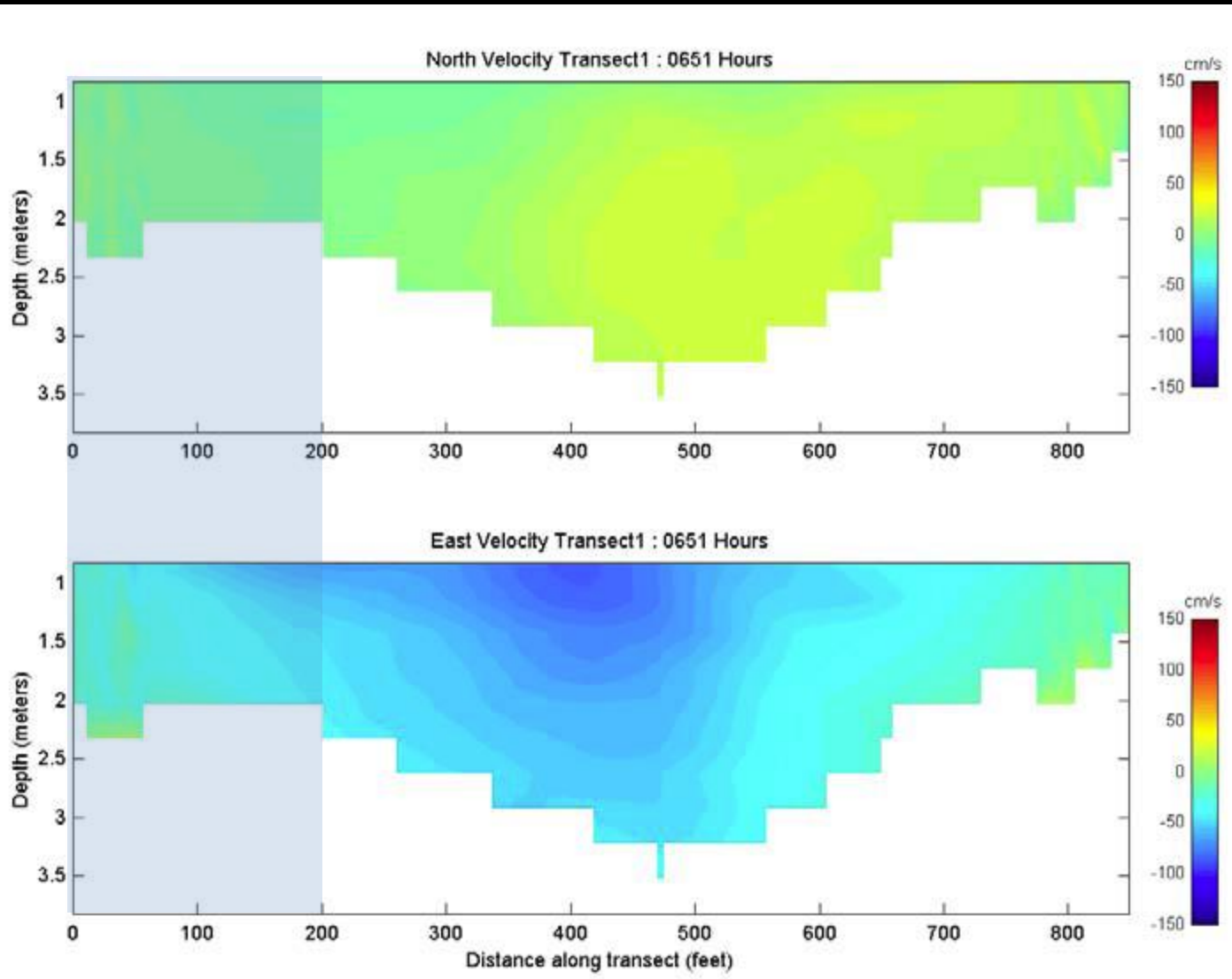
North Velocity Transect1 : 0651 Hours
Depth (meters)
1
1.5
2
2.5
3
3.5
0
100
200
300
400
500
600
700
800
cm/s
150
100
50
0
-50
-100
-150
East Velocity Transect1 : 0651 Hours
Depth (meters)
Distance along transect (feet)

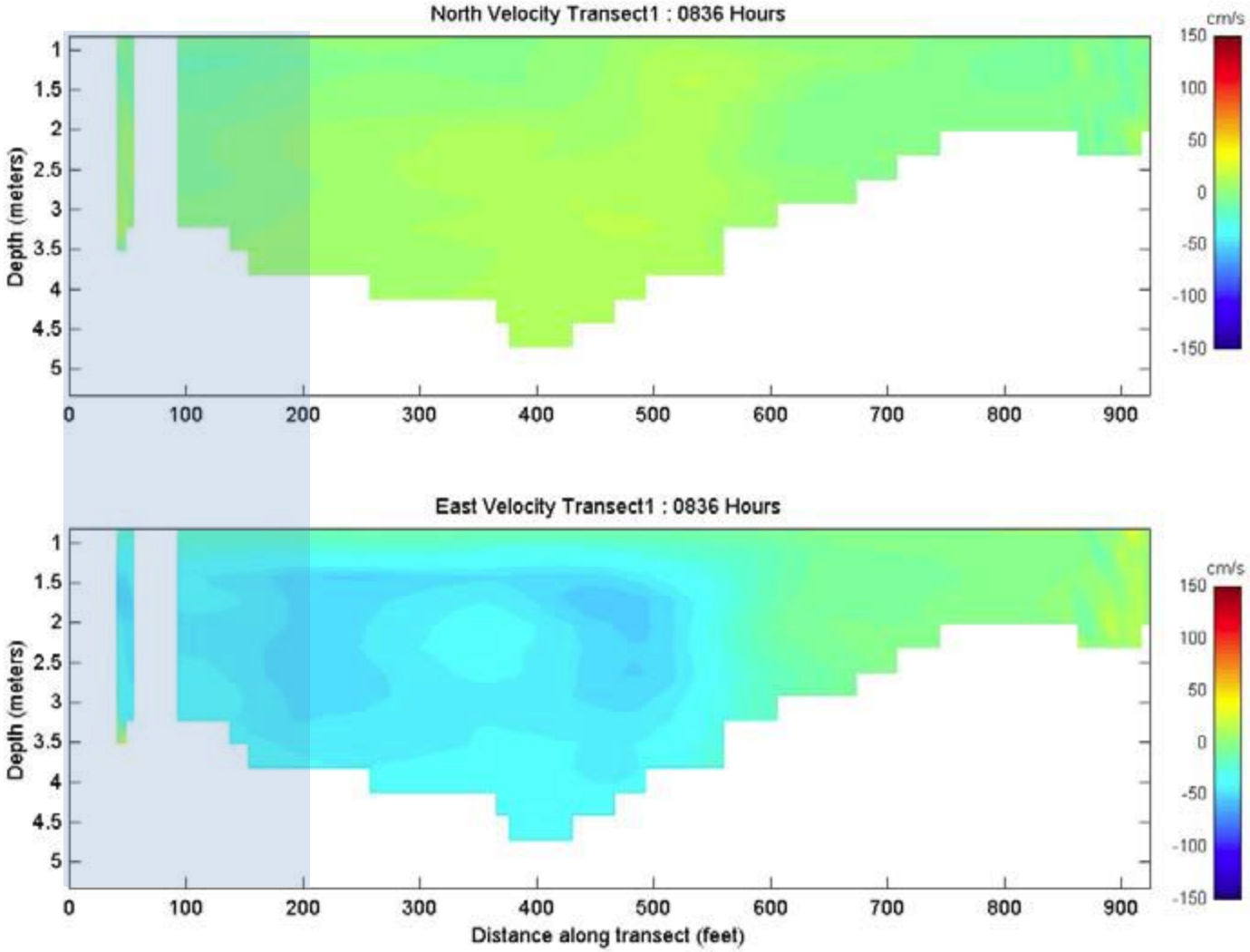
North Velocity Transect1 : 0836 Hours
Depth (meters)
1
1.5
2
2.5
3
3.5
4
4.5
5
0
100
200
300
400
500
600
700
800
900
cm/s
150
100
50
0
-50
-100
-150
East Velocity Transect1 : 0836 Hours
Depth (meters)
Distance along transect (feet)

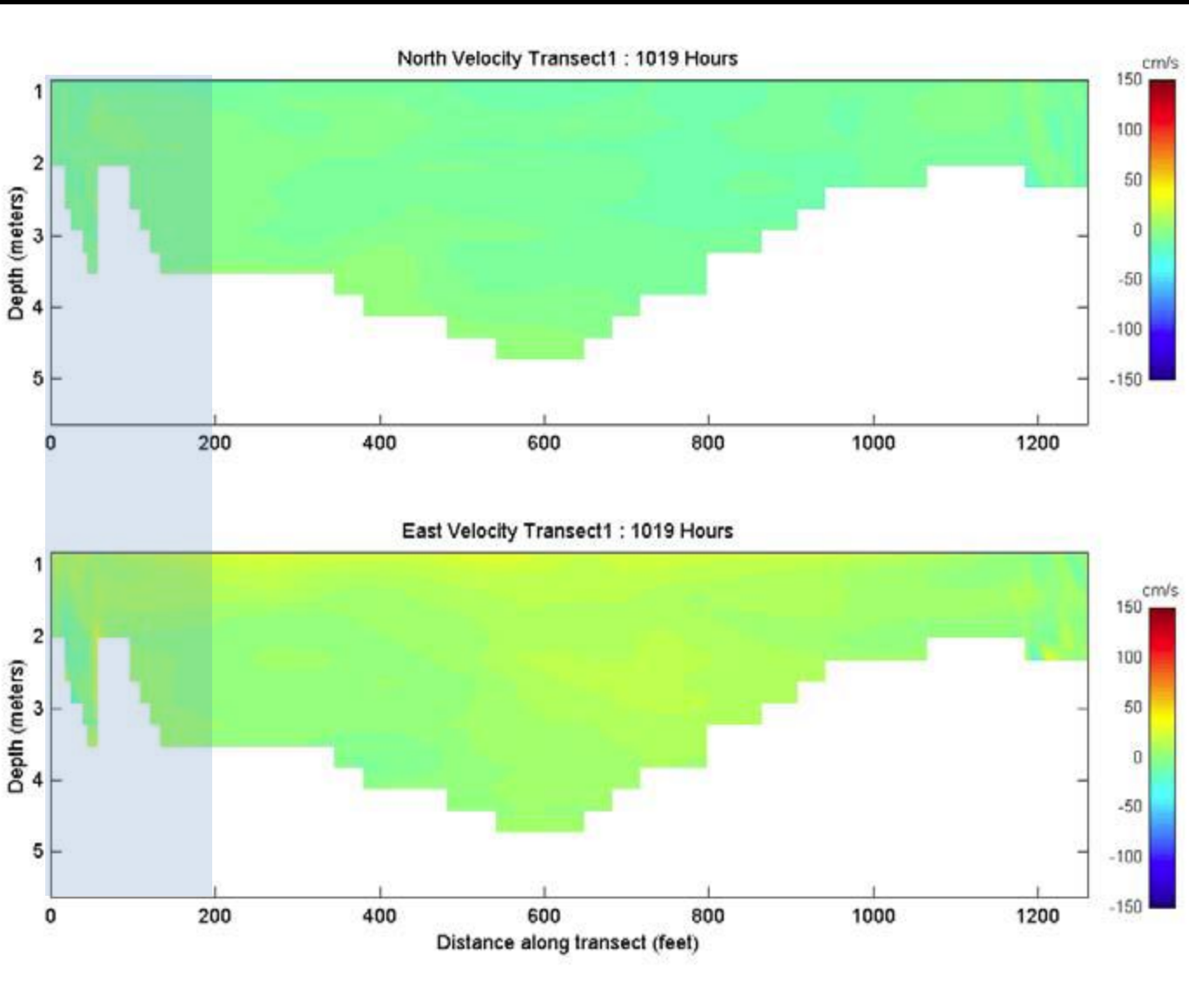
North Velocity Transect1 : 1019 Hours
Depth (meters)
1
2
3
4
5
0
200
400
600
800
1000
1200
cm/s
150
100
50
0
-50
-100
-150
East Velocity Transect1 : 1019 Hours
Depth (meters)
Distance along transect (feet)

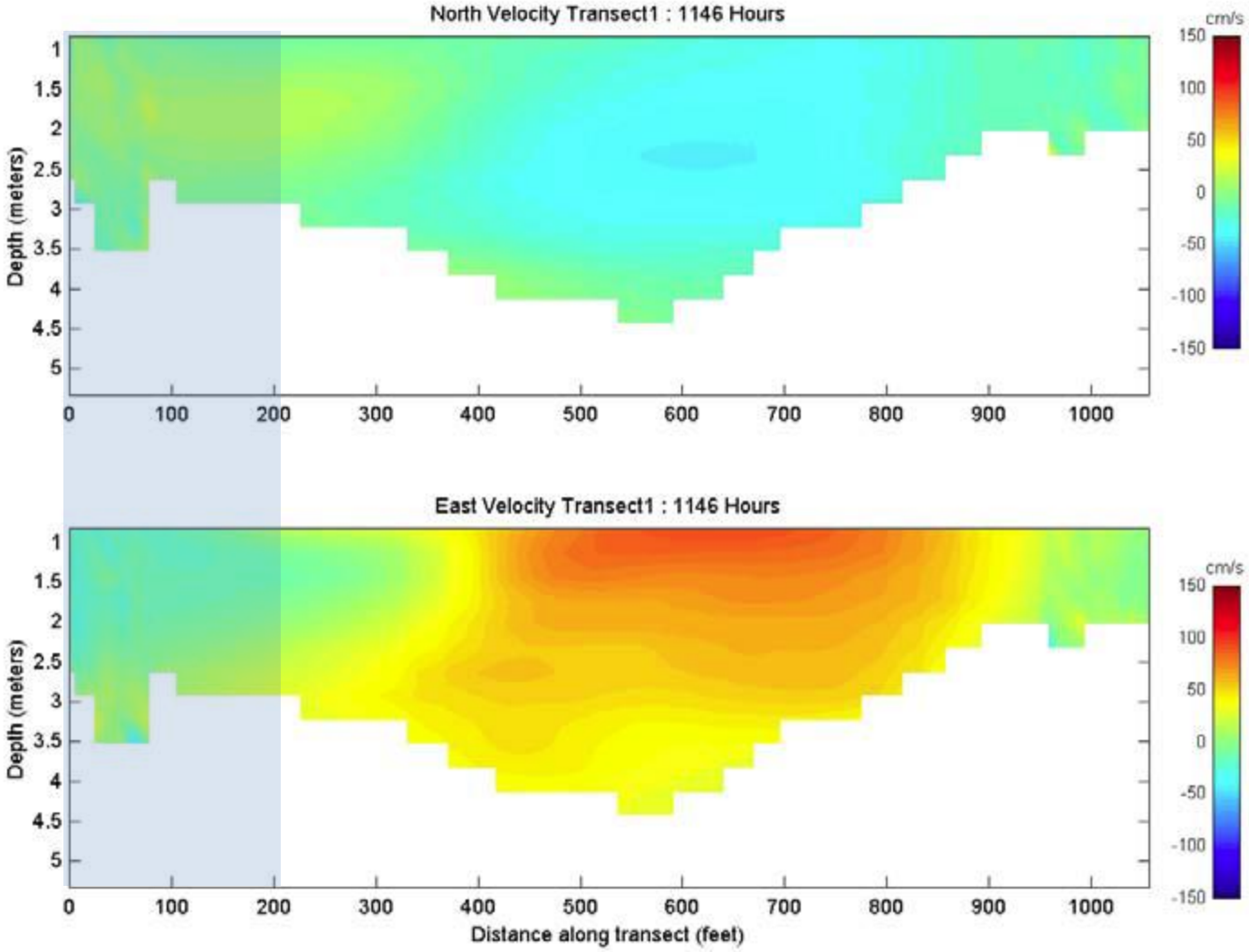
North Velocity Transect1 : 1146 Hours
East Velocity Transect1 : 1146 Hours
Depth (meters)
Distance along transect (feet)
cm/s
150
100
50
0
-50
-100
-150
1
1.5
2
2.5
3
3.5
4
4.5
5
0
100
200
300
400
500
600
700
800
900
1000

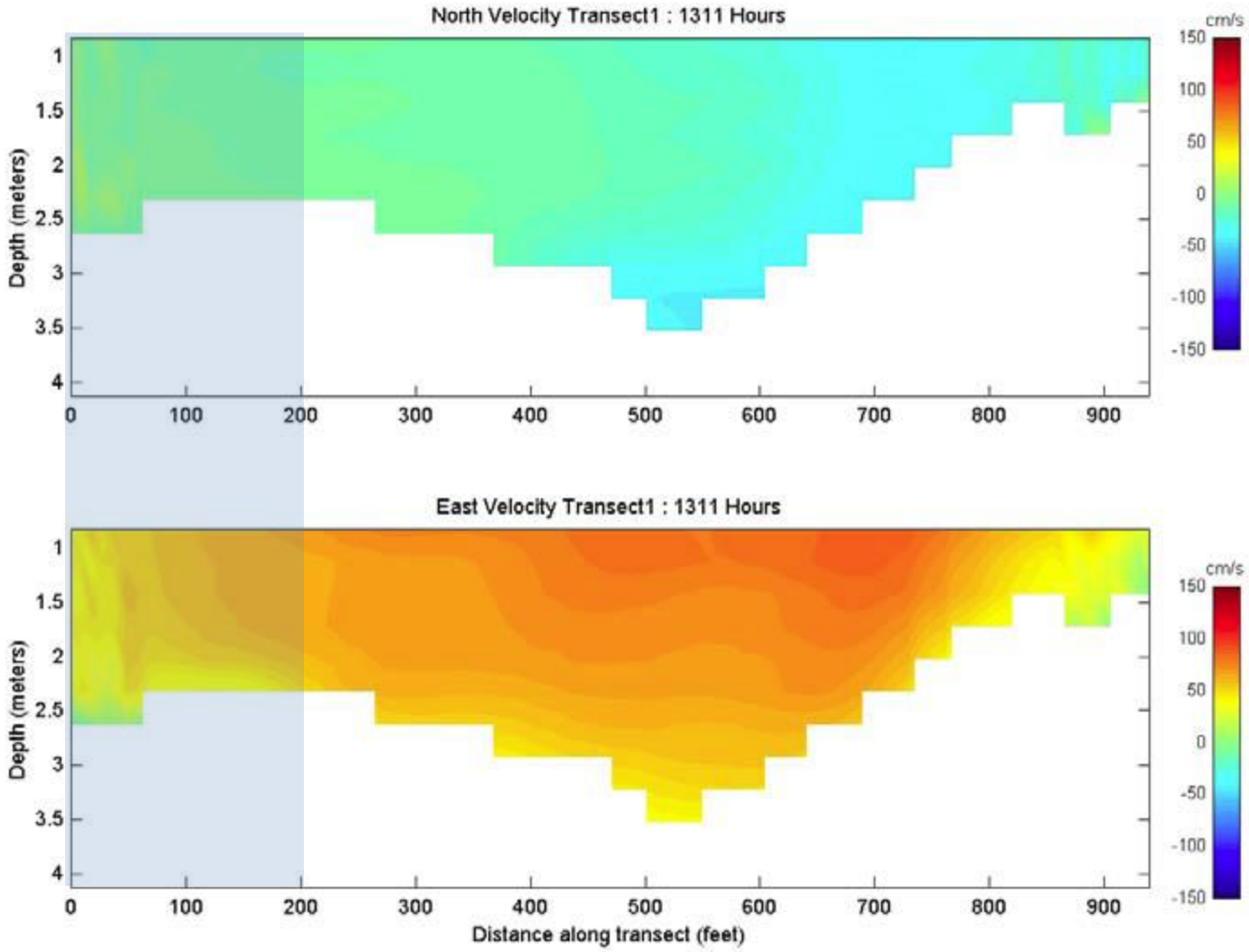
North Velocity Transect1 : 1311 Hours
Depth (meters)
1
1.5
2
2.5
3
3.5
4
0
100
200
300
400
500
600
700
800
900
cm/s
150
100
50
0
-50
-100
-150
East Velocity Transect1 : 1311 Hours
Depth (meters)
Distance along transect (feet)

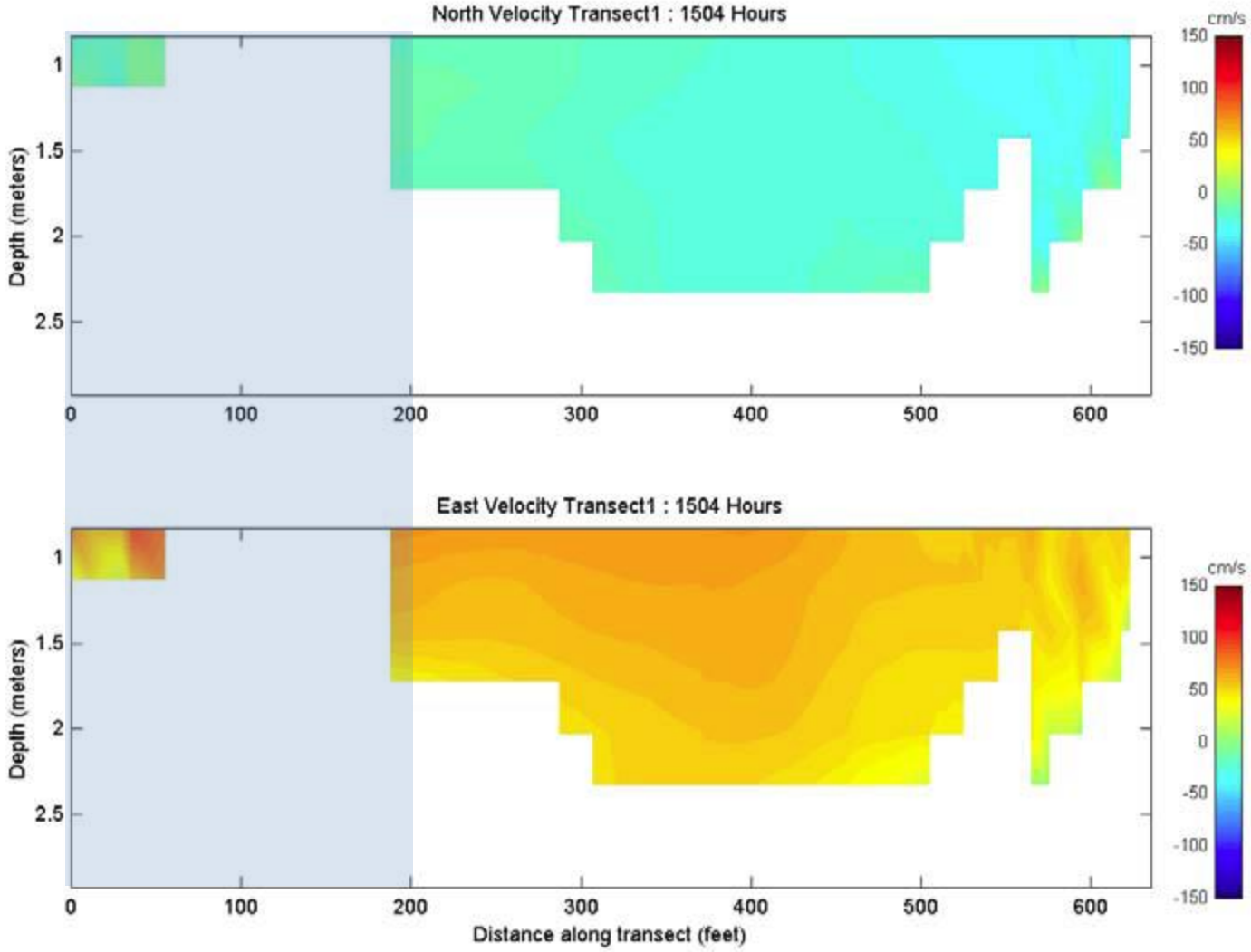
North Velocity Transect1 : 1504 Hours
Depth (meters)
1
1.5
2
2.5
0
100
200
300
400
500
600
cm/s
150
100
50
0
-50
-100
-150
East Velocity Transect1 : 1504 Hours
Depth (meters)
1
1.5
2
2.5
0
100
200
300
400
500
600
Distance along transect (feet)
cm/s
150
100
50
0
-50
-100
-150

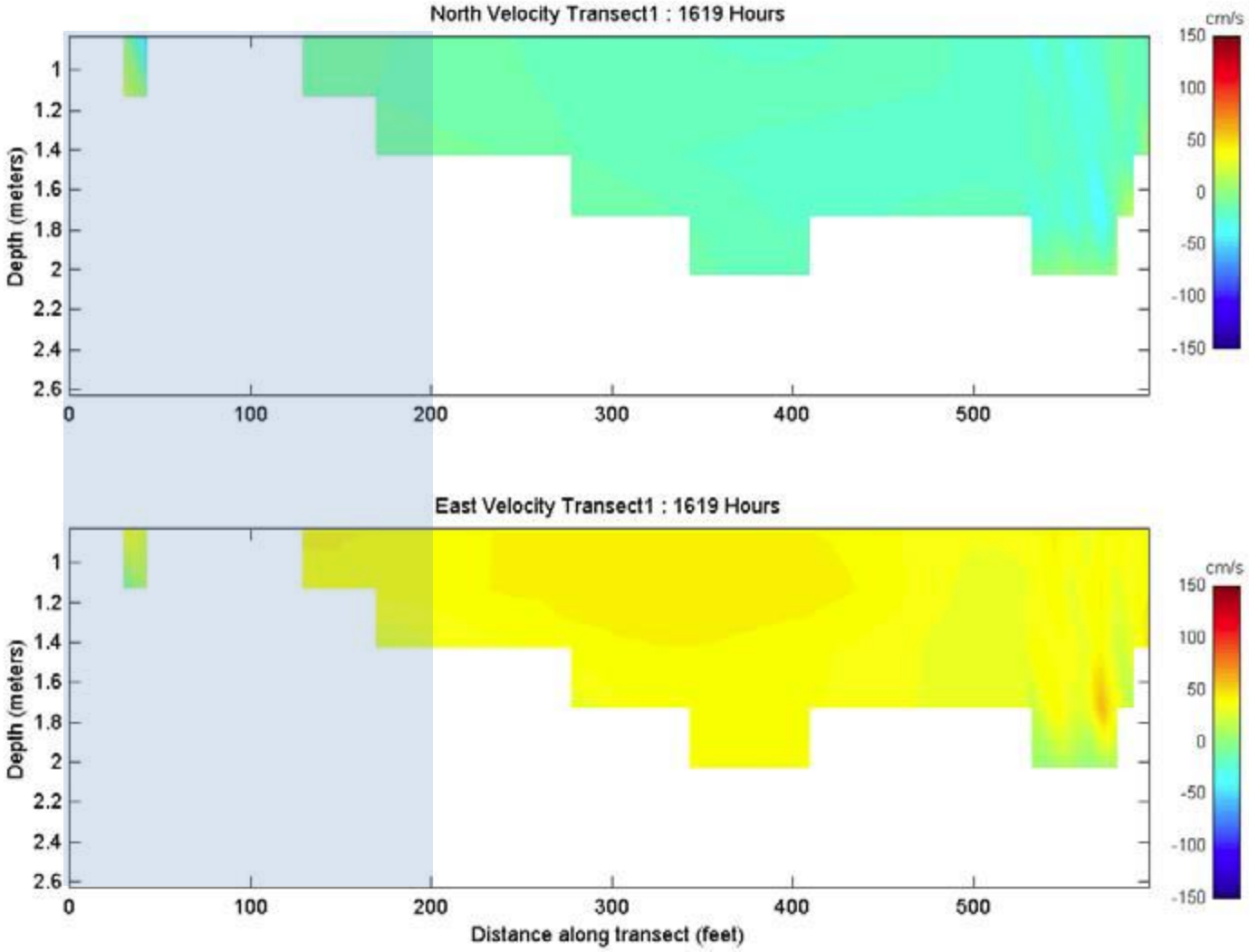
North Velocity Transect1 : 1619 Hours
Depth (meters)
1
1.2
1.4
1.6
1.8
2
2.2
2.4
2.6
0
100
200
300
400
500
cm/s
150
100
50
0
-50
-100
-150
East Velocity Transect1 : 1619 Hours
Depth (meters)
Distance along transect (feet)

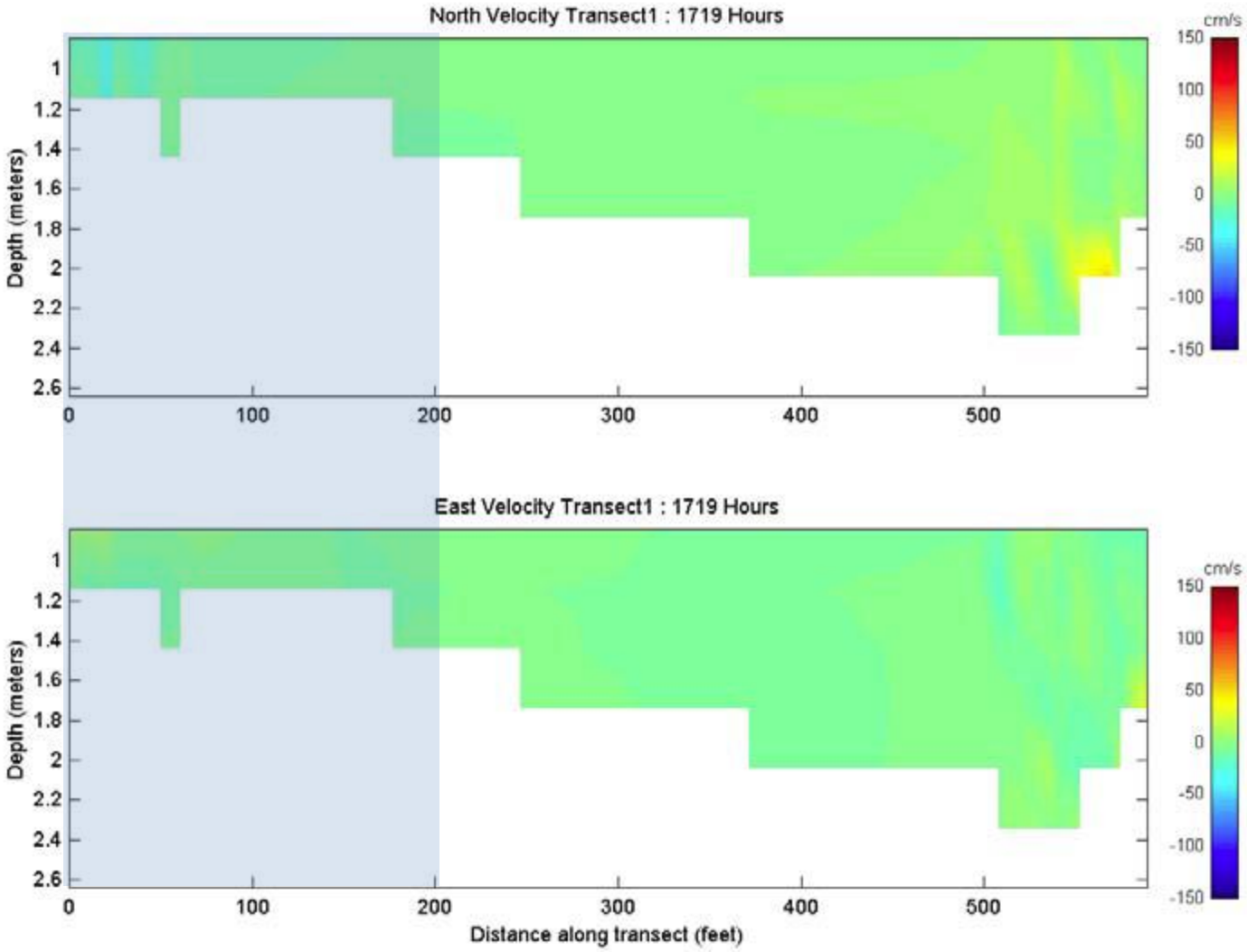
North Velocity Transect1 : 1719 Hours
Depth (meters)
1
1.2
1.4
1.6
1.8
2
2.2
2.4
2.6
0
100
200
300
400
500
cm/s
150
100
50
0
-50
-100
-150
East Velocity Transect1 : 1719 Hours
Depth (meters)
Distance along transect (feet)

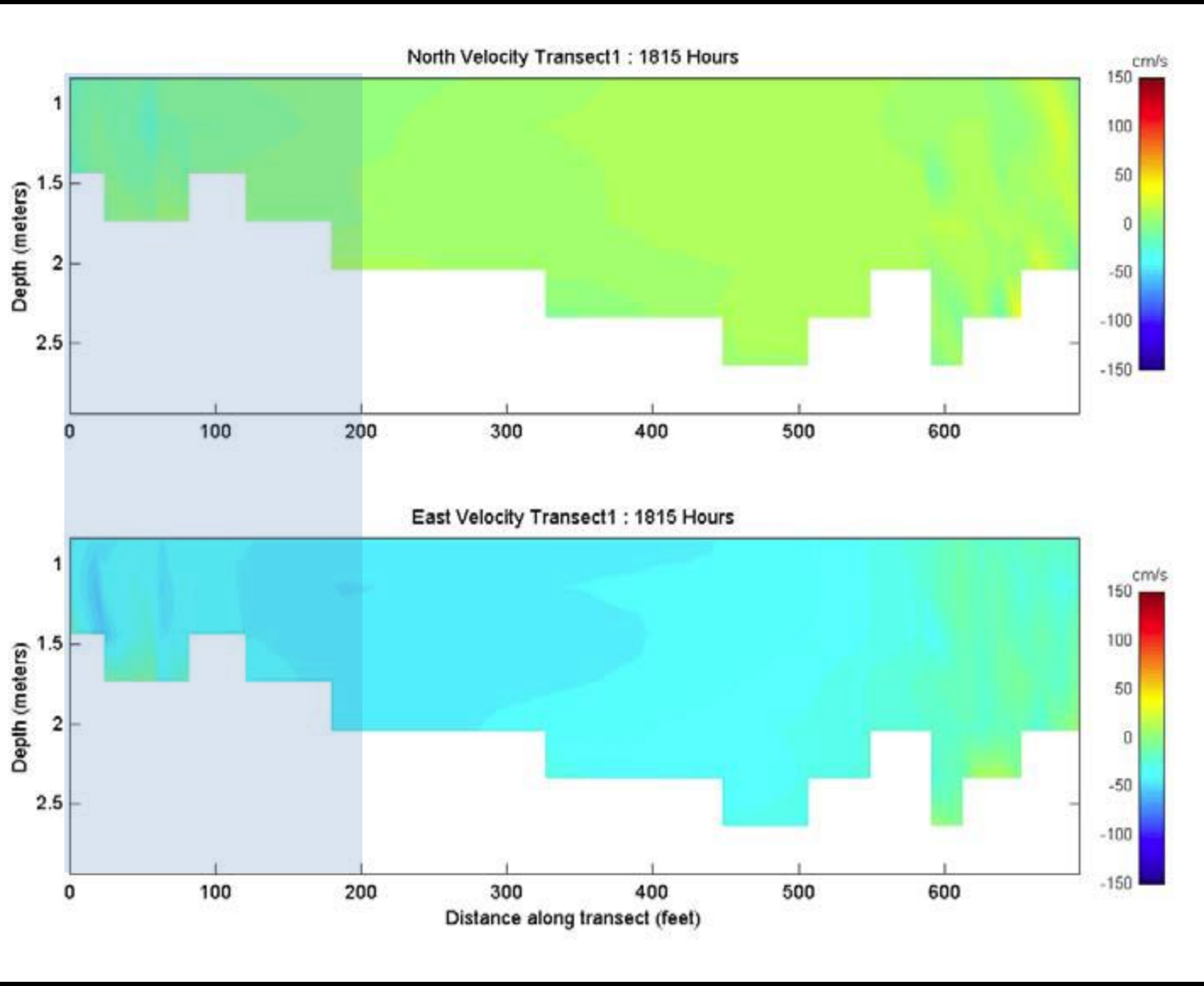
North Velocity Transect1 : 1815 Hours
Depth (meters)
1
1.5
2
2.5
0
100
200
300
400
500
600
cm/s
150
100
50
0
-50
-100
-150
East Velocity Transect1 : 1815 Hours
Depth (meters)
Distance along transect (feet)

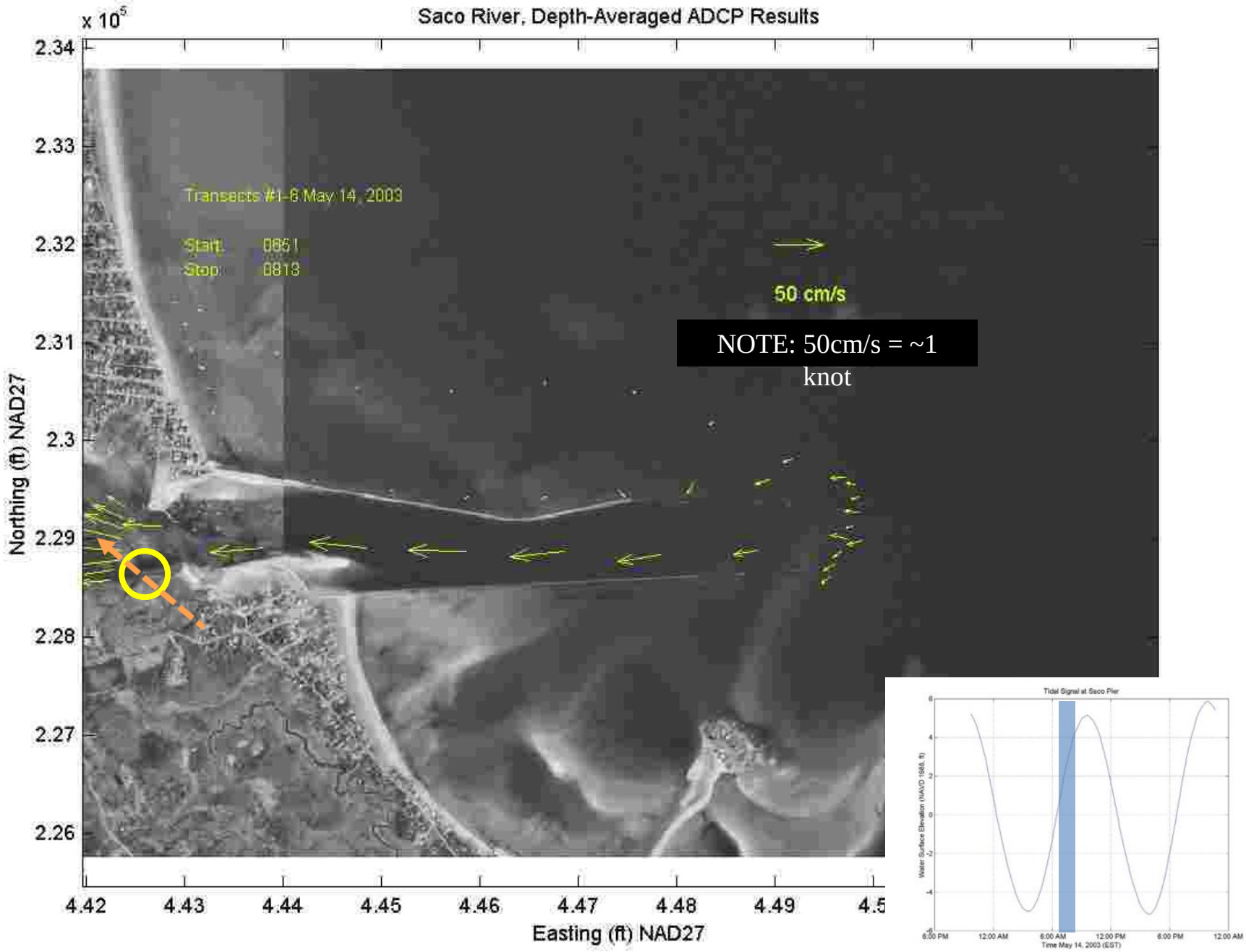
Saco River, Depth-Averaged ADCP Results
x 10^5
2.34
2.33
2.32
2.31
2.3
2.29
2.28
2.27
2.26
Northing (ft) NAD27
Transects #1-8 May 14, 2003
Start 0851
Stop 0813
50 cm/s
NOTE: 50cm/s = ~1 knot
4.42
4.43
4.44
4.45
4.46
4.47
4.48
4.49
4.5
Easting (ft) NAD27
Tidal Signal at Saco Pier
Water Surface Elevation (NAVD 1988, ft)
6
4
2
0
-2
-4
-6
6:00 PM
12:00 AM
6:00 AM
12:00 PM
6:00 PM
12:00 AM
Time May 14, 2003 (EST)

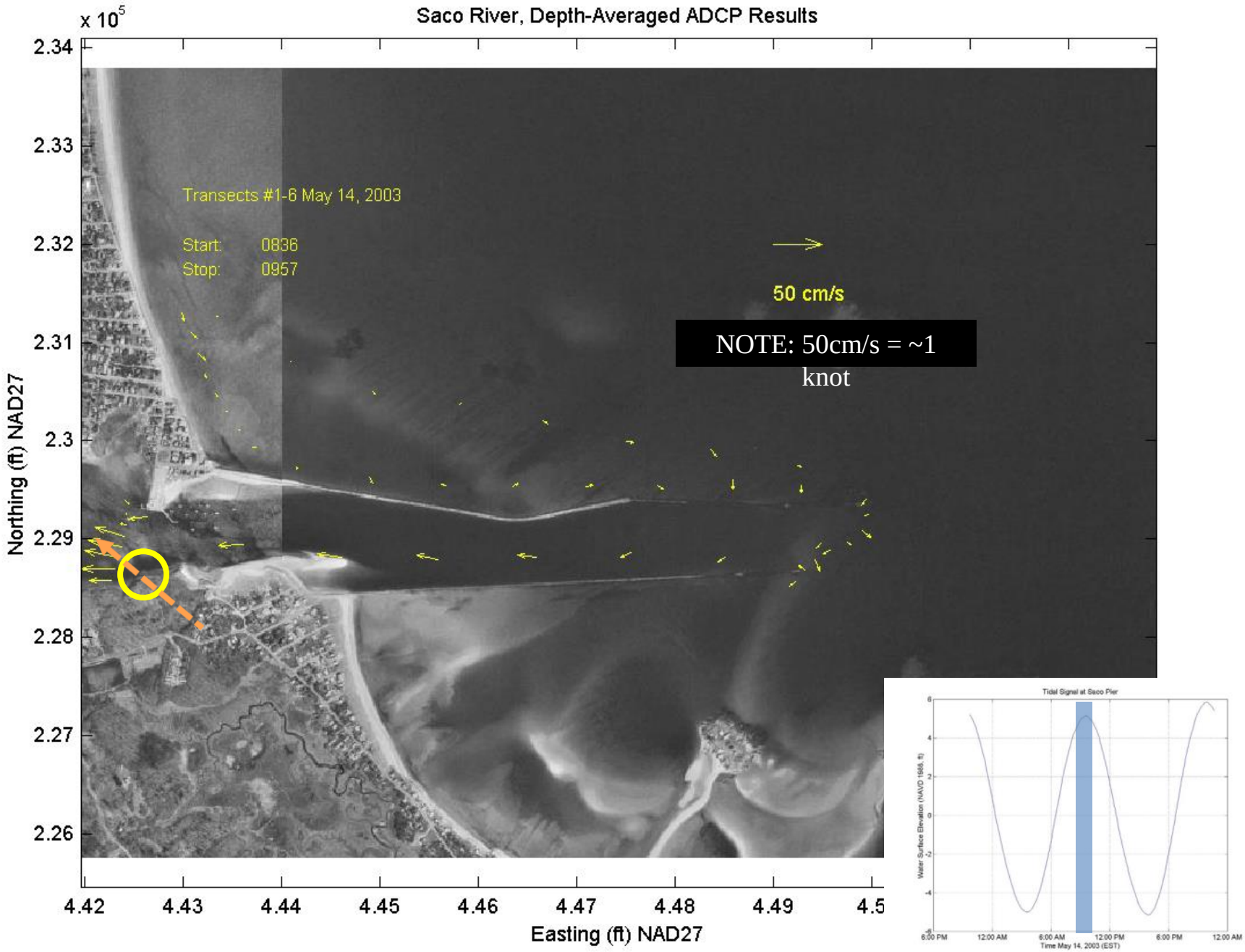
Saco River, Depth-Averaged ADCP Results
x 10^5
Transects #1-6 May 14, 2003
Start: 0836
Stop: 0957
50 cm/s
NOTE: 50cm/s = ~1 knot
Northing (ft) NAD27
Easting (ft) NAD27
2.34
2.33
2.32
2.31
2.3
2.29
2.28
2.27
2.26
4.42
4.43
4.44
4.45
4.46
4.47
4.48
4.49
4.5
Tidal Signal at Saco Pier
Water Surface Elevation (NAVD 1988, ft)
6:00 PM
12:00 AM
6:00 AM
12:00 PM
6:00 PM
12:00 AM
Time May 14, 2003 (EST)

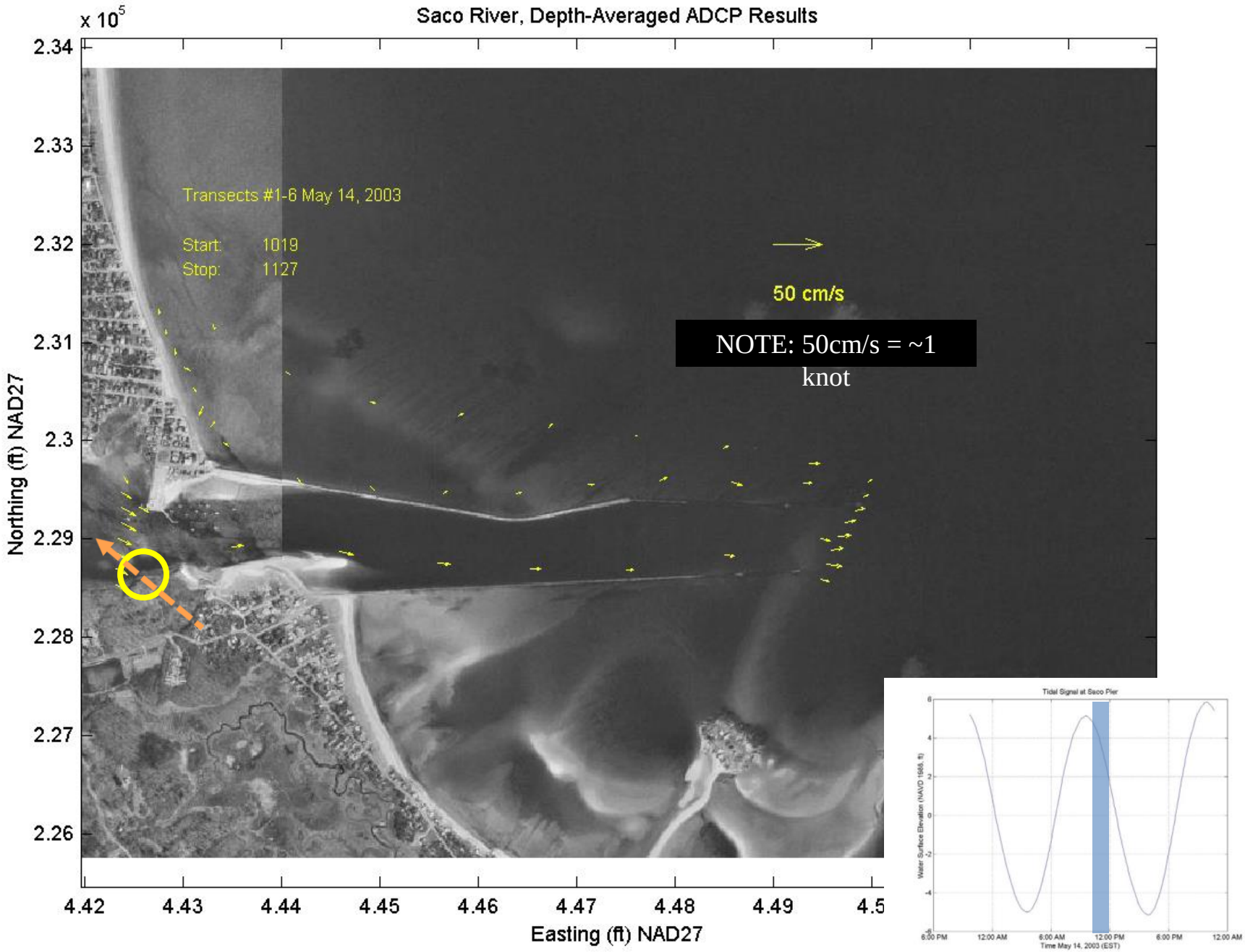
Saco River, Depth-Averaged ADCP Results
x 10^5
Transects #1-6 May 14, 2003
Start: 1019
Stop: 1127
50 cm/s
NOTE: 50cm/s = ~1 knot
Northing (ft) NAD27
Easting (ft) NAD27
2.34
2.33
2.32
2.31
2.3
2.29
2.28
2.27
2.26
4.42
4.43
4.44
4.45
4.46
4.47
4.48
4.49
4.5
Tidal Signal at Saco Pier
Water Surface Elevation (NAVD 1988, ft)
6:00 PM
12:00 AM
6:00 AM
12:00 PM
6:00 PM
12:00 AM
Time May 14, 2003 (EST)

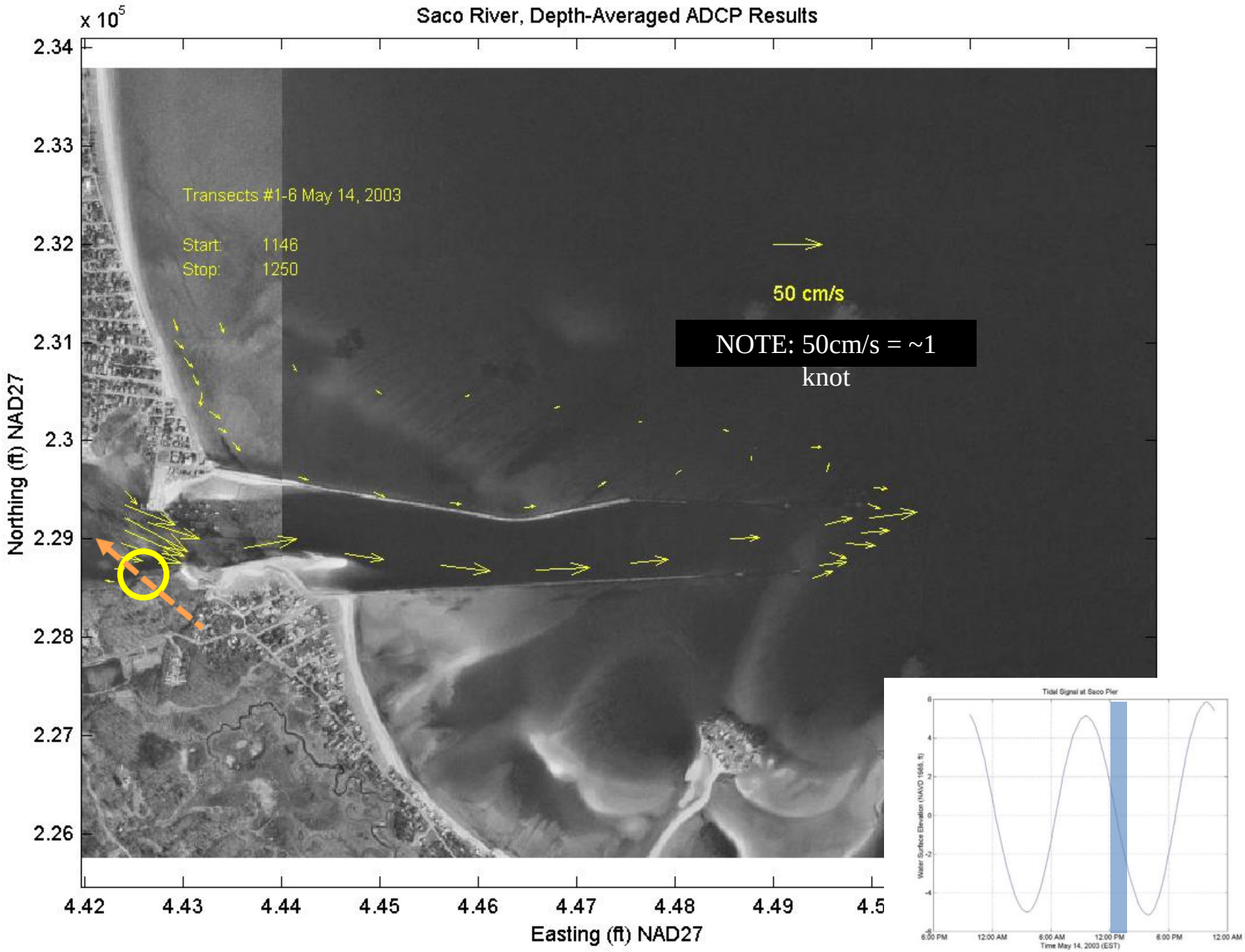
Saco River, Depth-Averaged ADCP Results
x 10^5
2.34
2.33
2.32
2.31
2.3
2.29
2.28
2.27
2.26
Northing (ft) NAD27
Transects #1-6 May 14, 2003
Start: 1146
Stop: 1250
50 cm/s
NOTE: 50cm/s = ~1 knot
4.42
4.43
4.44
4.45
4.46
4.47
4.48
4.49
4.5
Easting (ft) NAD27
Tidal Signal at Saco Pier
Water Surface Elevation (NAVD 1988, ft)
6
4
2
0
-2
-4
-6
6:00 PM
12:00 AM
6:00 AM
12:00 PM
6:00 PM
12:00 AM
Time May 14, 2003 (EST)

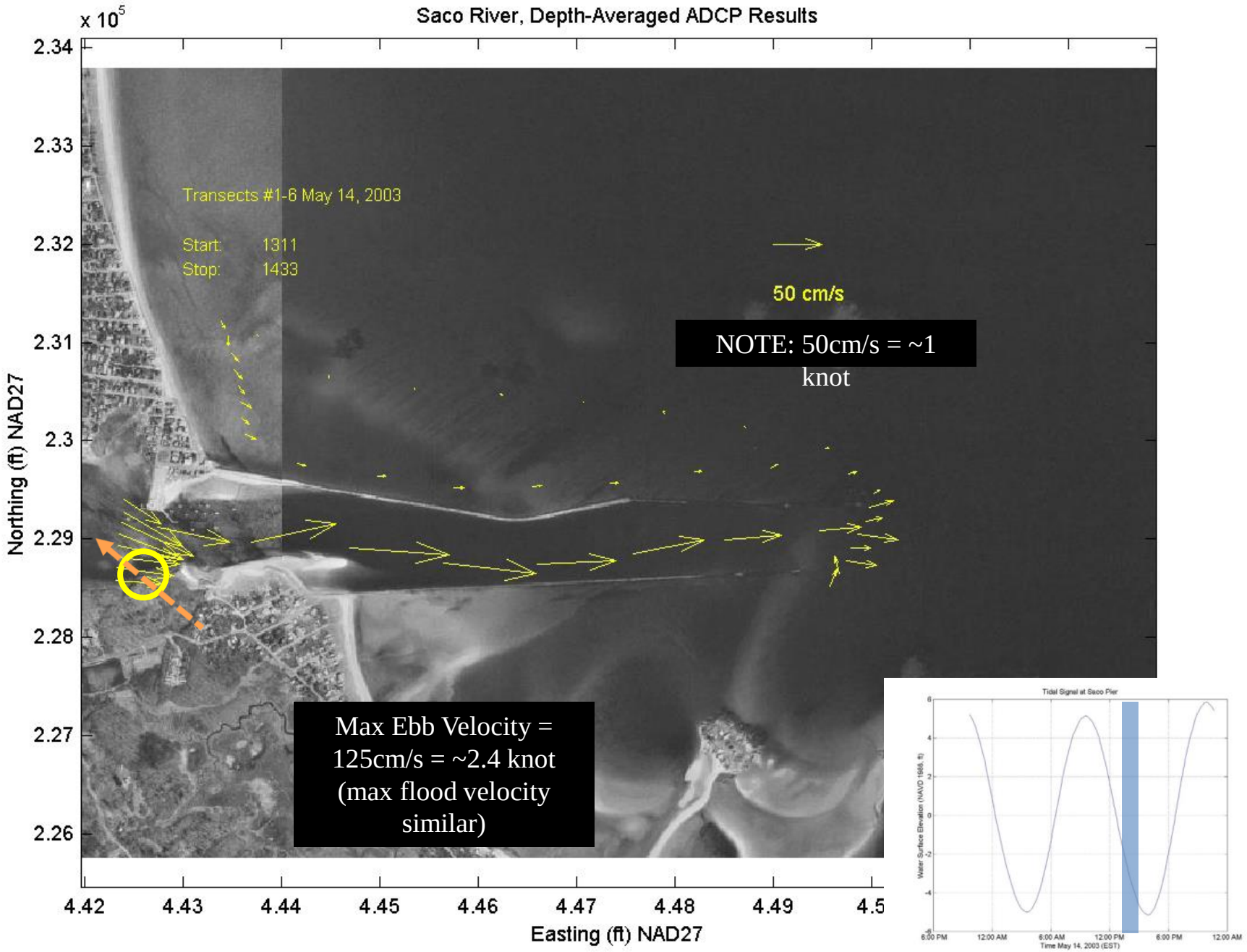
Saco River, Depth-Averaged ADCP Results
x 10^5
2.34
2.33
2.32
2.31
2.3
2.29
2.28
2.27
2.26
Northing (ft) NAD27
Transects #1-6 May 14, 2003
Start: 1311
Stop: 1433
50 cm/s
NOTE: 50cm/s = ~1 knot
Max Ebb Velocity = 125cm/s = ~2.4 knot (max flood velocity similar)
4.42
4.43
4.44
4.45
4.46
4.47
4.48
4.49
4.5
Easting (ft) NAD27
Tidal Signal at Saco Pier
Water Surface Elevation (NAVD 1988, ft)
6
4
2
0
-2
-4
-6
6:00 PM
12:00 AM
6:00 AM
12:00 PM
6:00 PM
12:00 AM
Time May 14, 2003 (EST)

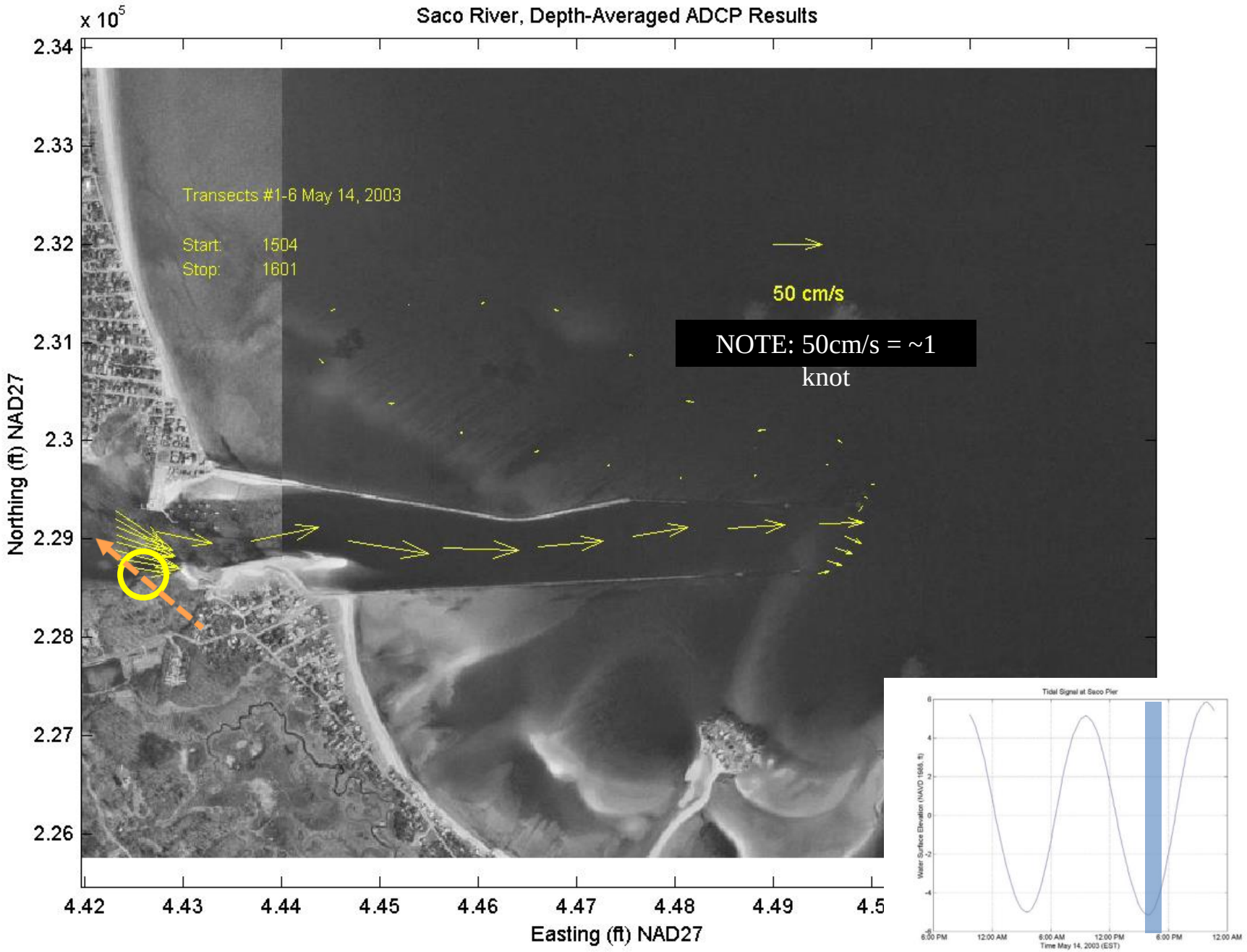
Saco River, Depth-Averaged ADCP Results
x 10^5
Transects #1-6 May 14, 2003
Start: 1504
Stop: 1601
50 cm/s
NOTE: 50cm/s = ~1 knot
Northing (ft) NAD27
Easting (ft) NAD27
2.34
2.33
2.32
2.31
2.3
2.29
2.28
2.27
2.26
4.42
4.43
4.44
4.45
4.46
4.47
4.48
4.49
4.5
Tidal Signal at Saco Pier
Water Surface Elevation (NAVD 1988, ft)
6:00 PM
12:00 AM
6:00 AM
12:00 PM
6:00 PM
12:00 AM
Time May 14, 2003 (EST)

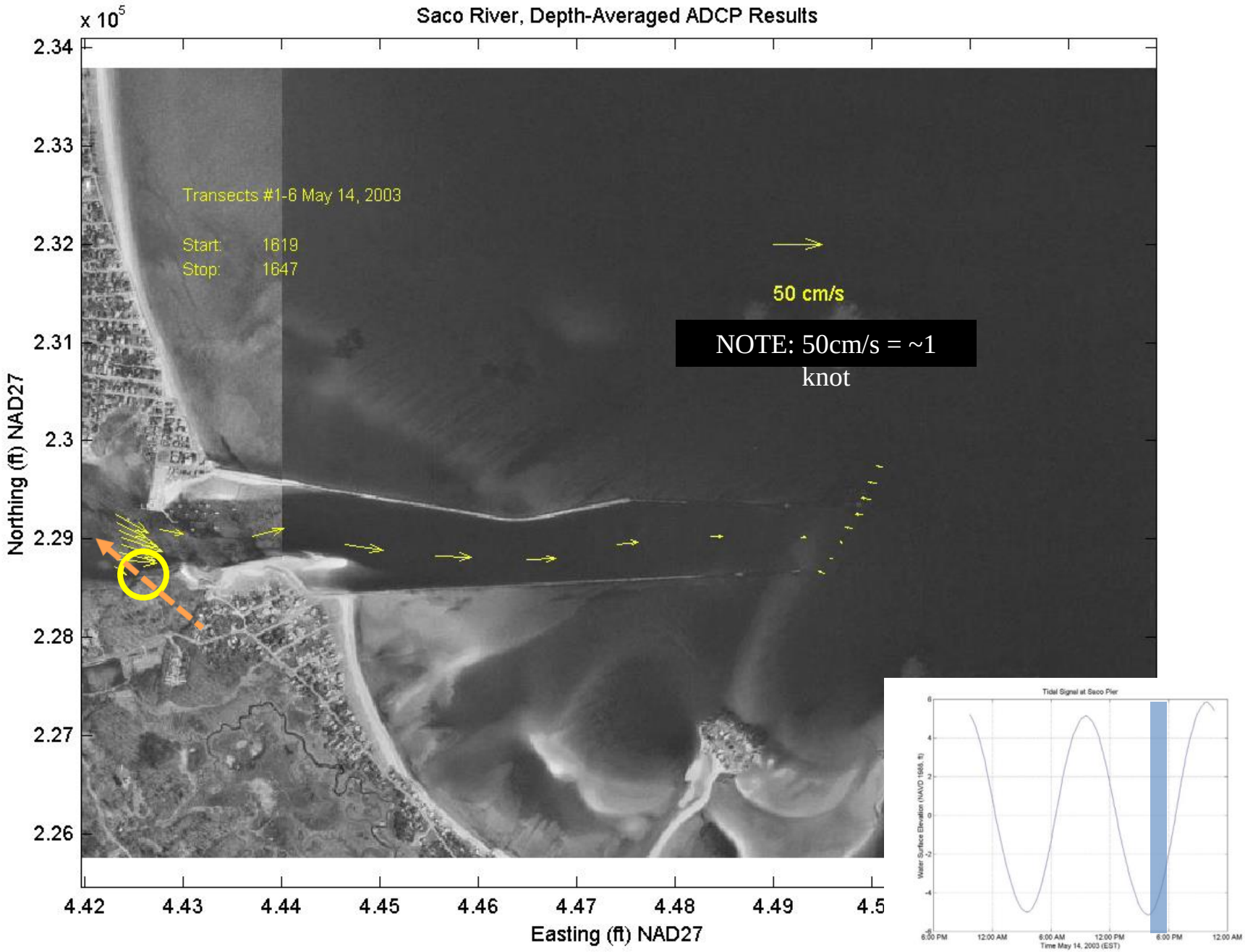
Saco River, Depth-Averaged ADCP Results
x 10^5
Transects #1-6 May 14, 2003
Start: 1619
Stop: 1647
50 cm/s
NOTE: 50cm/s = ~1 knot
Northing (ft) NAD27
Easting (ft) NAD27
2.34
2.33
2.32
2.31
2.3
2.29
2.28
2.27
2.26
4.42
4.43
4.44
4.45
4.46
4.47
4.48
4.49
4.5
Tidal Signal at Saco Pier
Water Surface Elevation (NAVD 1988, ft)
6:00 PM
12:00 AM
6:00 AM
12:00 PM
6:00 PM
12:00 AM
Time May 14, 2003 (EST)

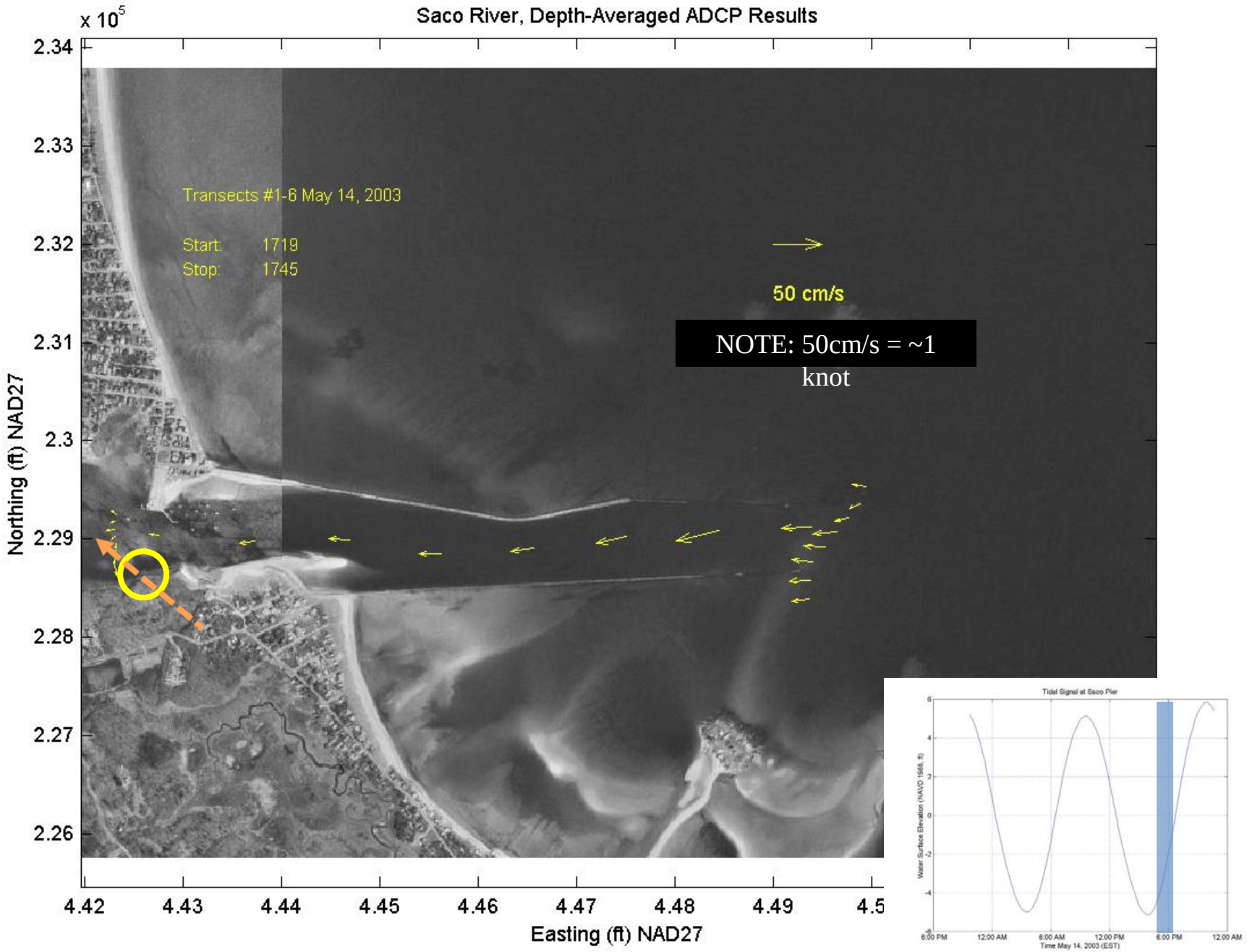
Saco River, Depth-Averaged ADCP Results
x 10^5
2.34
2.33
2.32
2.31
2.3
2.29
2.28
2.27
2.26
Northing (ft) NAD27
Transects #1-6 May 14, 2003
Start: 1719
Stop: 1745
50 cm/s
NOTE: 50cm/s = ~1 knot
4.42
4.43
4.44
4.45
4.46
4.47
4.48
4.49
4.5
Easting (ft) NAD27
Tidal Signal at Saco Pier
Water Surface Elevation (NAVD 1988, ft)
6:00 PM
12:00 AM
6:00 AM
12:00 PM
6:00 PM
12:00 AM
Time May 14, 2003 (EST)

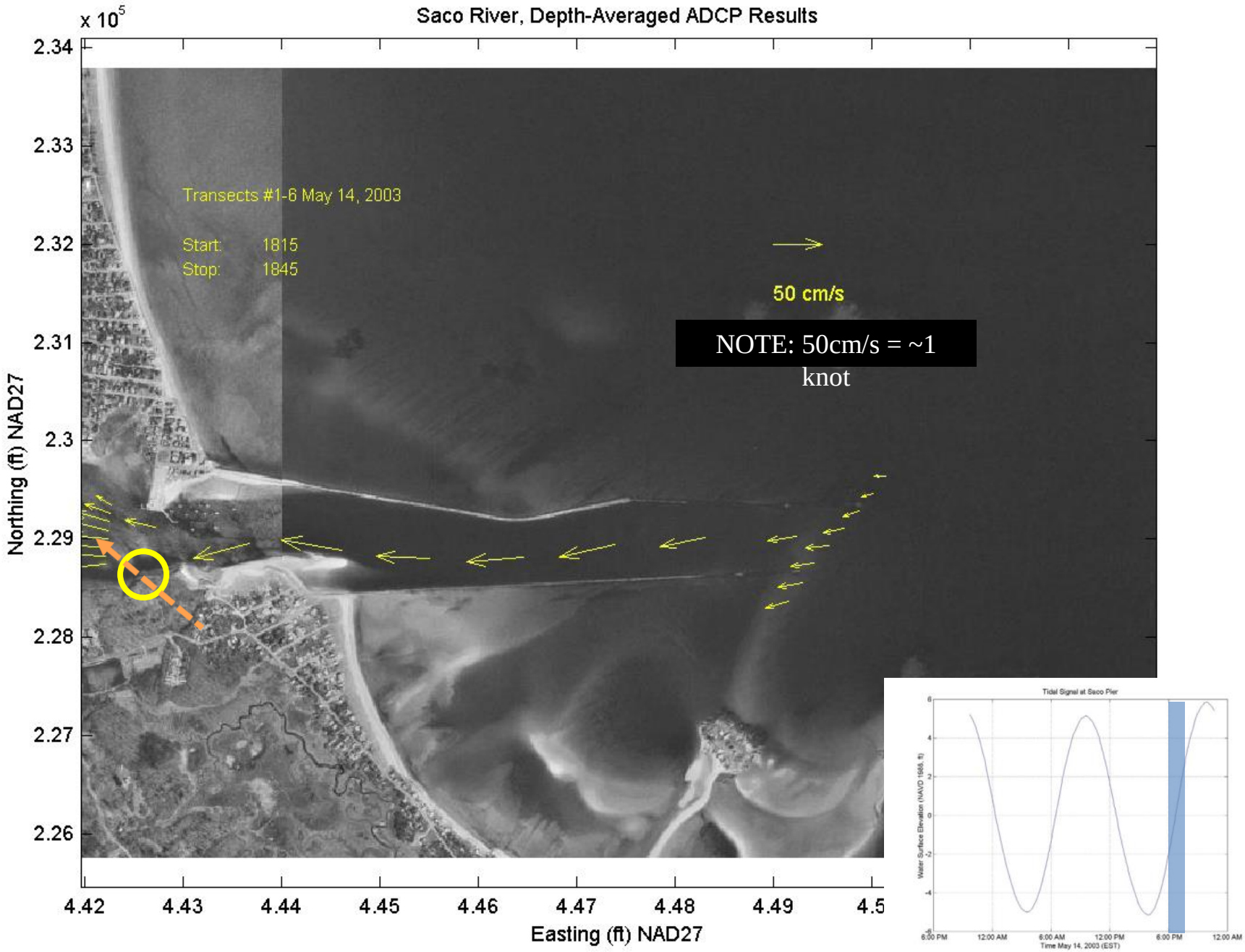
Saco River, Depth-Averaged ADCP Results
x 10^5
2.34
2.33
2.32
2.31
2.3
2.29
2.28
2.27
2.26
Northing (ft) NAD27
Transects #1-6 May 14, 2003
Start: 1815
Stop: 1845
50 cm/s
NOTE: 50cm/s = ~1 knot
4.42
4.43
4.44
4.45
4.46
4.47
4.48
4.49
4.5
Easting (ft) NAD27
Tidal Signal at Saco Pier
Water Surface Elevation (NAVD 1988, ft)
6
4
2
0
-2
-4
-6
6:00 PM
12:00 AM
6:00 AM
12:00 PM
6:00 PM
12:00 AM
Time May 14, 2003 (EST)

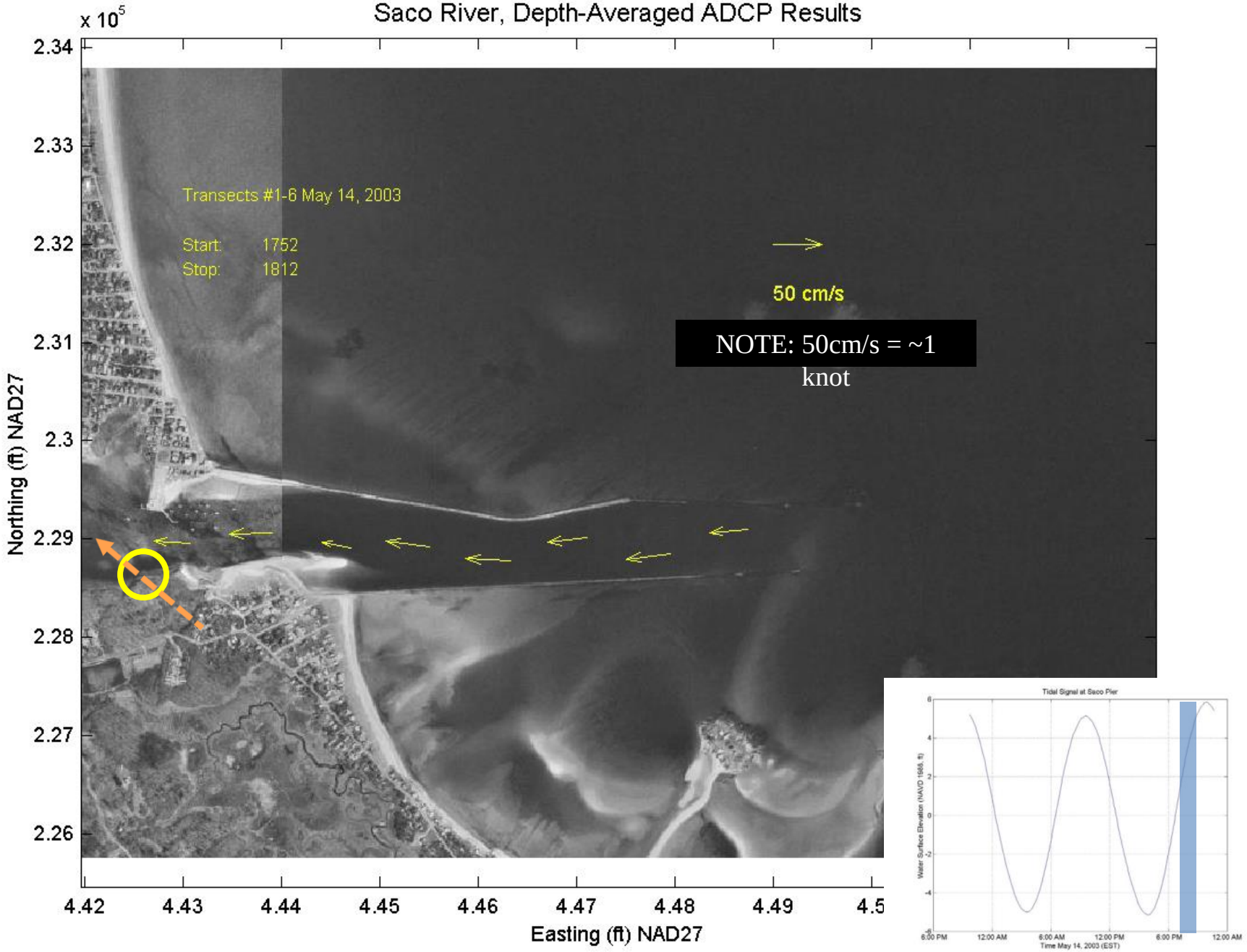
Saco River, Depth-Averaged ADCP Results
x 10^5
2.34
2.33
2.32
2.31
2.3
2.29
2.28
2.27
2.26
Northing (ft) NAD27
Transects #1-6 May 14, 2003
Start: 1752
Stop: 1812
50 cm/s
NOTE: 50cm/s = ~1 knot
4.42
4.43
4.44
4.45
4.46
4.47
4.48
4.49
4.5
Easting (ft) NAD27
Tidal Signal at Saco Pier
Water Surface Elevation (NAVD 1988, ft)
6:00 PM
12:00 AM
6:00 AM
12:00 PM
6:00 PM
12:00 AM
Time May 14, 2003 (EST)

- ***6.5.1 Transect 1***
- The channel geometry along Transect 1 consists of a single, relatively shallow channel. The transect is located just east of the Saco Pier, where a significant reduction in channel width occurs. Maximum depths in the channel at this location are approximately 5m (16.4 ft). The maximum recorded flood velocities were approximately 100-125 cm/s (3.3-4.1 ft/s). The maximum flood currents run in a west to west northwest direction throughout the entire water column. In addition to the westward flow, northward flow occurred on the northern portion of the channel indicating likely eddying around the point on the northern shore. The east/west flow also indicates some eastward flow in the northern extent of the transect, supporting the eddy structure. As the flood tide progressed, the stronger western currents were confined to the southern part of the channel. High tide occurred at 0905 hours and reversal of the flow direction was observed throughout the channel by 1019 hours. The maximum recorded ebb velocities were approximately 100-125 cm/s (3.3-4.1 ft/s) and occurred between 1100 and 1330 hours. These southeasterly ebb currents appear to favor the north side of the channel during the start of the ebb where the strongest currents are confined to the upper 2m of the water column. As the tide progresses, these currents spread to the entire channel area depth and breadth. During the majority of the ebb and flood phases of the tide, the color contour plots show increased turbulence and related eddy formation adjacent to the north shore (between 500 ft [152 m] and the end of transect). The increased turbulence is a result of the protrusion of the northern point (near Saco Harbor) into the channel. This narrowing prevents direct flow into or out of the river channel producing eddies as water tries to enter or exit the reduced-width channel.

Permit Requirements and Timing

- Maine DEP NRPA
- ACOE
- Saco River Corridor Commission
- City of Biddeford
- Harbor Commission
- February 2016 grant funding
- Construction spring 2017

Attachment 1
Formal Site Plan Review Application

City of Biddeford – Planning Department
Planning Board Application
P.O. Box 586, 205 Main Street Biddeford, Maine 04005
207-284-9115

Type of Application:

_x_ Shoreland Zoning Permit
_x_ Site Plan Review (Please include checklist)
__ Extraction
__ Conditional Use Permit
__ Subdivision (Please include Checklist)
__ Private Way
__ Other: _____

Applicant Information:

Name: University of New England
Mailing Address: 11 Hills Beach Road Biddeford, Maine
Telephone: 207-602-2365
Email: aphilippe@une.edu

What is your legal interest in the property?

_x_ Owner __ Potential Buyer with Contract __ Lease/Rental Agreement

Owner's Information:

Name: Applicant
Mailing Address: _____
Telephone: _____
Email: _____

Agent's Information:

Name: Tom Saucier, P.E. Site design Associates
Mailing Address: 23 Whitney Way Topsham, Maine 04086
Telephone: 207-449-4275
Email: tsaucier@sitedesignassociates.biz

Engineer/Surveyor's Information:

Name: Agent
Mailing Address: _____
Telephone: _____
Email: _____

Project Location and Lot Information:

Street Address: 11 Hills Beach Road Drainage Watershed: Tidal portion of Saco River
Tax Map: 52 Lot: 4
Current Zoning: IN Shoreland Zoning: Limited Residential
Size of Lot: 49.9 (x)acres ( )s.f. Lot Frontage: 1,489 ft +\-
Existing Use of Property: University use - Girard Marine Science Center

Property currently serviced by:

_x_ City Road __ Public Sewer _x_ Public Water __ Public Trash
__ Private Road __ Septic System __ Private Well _x_ Private Hauler

Slope Conditions in Area of Construction (if applicable):

__Flat (0-3% slope) __Rolling (3-8% slope) _x_ Hilly (8-15% slope) _x_ Steep (15%+ Slope)

Are there any wetlands or waterbodies on the site? _x_ (Yes)__(No) if yes attach information
Is the project within the 100-year floodplain? __ (Yes) _x_ (No) if yes attach information
Do you plan to bring fill onto the lot? _x_ (Yes) __(No) If yes attach information

Description of proposed use of property:

Project/Proposed Use:

University use - Research Pier

Property to be Serviced by:

x City Road __ Public Sewer x Public Water __ Public Trash

__ Private Road __ Septic System __ Private Well x Private Hauler

Limits of Disturbance: 0.5 (x)acres ( )s.f.

Net change in impervious cover: 0.249 (x)acres ( )s.f.

Is this project part of a larger project? __(Yes) x (No)

Is the project proposing a new Private or Public Road? __(Yes, Private) __(Yes, Public) x (No)

Is this project within the Urbanized Area/MS4 (*see City Drainage Map*) x (Yes) __(No)

Is the project proposing any Stormwater facilities/BMPs? x (Yes) __(No)

Will a Traffic Movement Permit (TMP) be required?: __(Yes) x (No)

x **If in a Shoreland Zone:**

Percent of residential lot coverage (Max 20%): N/A

Percent of structure expansion (Max 30%): N/A

__ **If Subdivision Review, number of lots proposed:** _____

__ **If a Private Way is proposed, number of lots served:** _____

If Site Plan Review, you must provide the following information:

Total new square feet footprint of structure: _____

Total new square feet paving/parking: 10,850 +/-

Waiver Requests (attach details):

1. See cover letter and June 9, 2025 responses to comments
2. _____
3. _____
4. _____
5. _____

Required Submittal Attachments:

A. Letters of Approval

x Fire Department – Contact Chief or Deputy Chief – 282-9986 (Request sent; previously revised plans

__ Ability to Serve for Water Service – Maine Water – 282-1543 in response to BFD comments.)

__ Ability to Serve for Sewer Service – Engineering Department – Tom Milligan 284-9118

__ Police Department – e-911 Road Name Designation – Contact Joanne Fisk 282-5127

__ Ability to Serve for Electrical Service-CMP-1-866-225-4200

x Letter to Planning Board describing project, Waiver requests, proposed improvements, addressing permit requirements, etc.

B. Photographs of Site.

C. Architectural renderings/drawings of proposed buildings, as required.

D. Engineering Plans, as required.

E. Stormwater Management Report, as required.

Fees (Due at time of Submission):

- $75 Nonrefundable Administration Fee is required for every application.
- Refer to "Attachment A Fees and Charges" of the Land Development Regulations for more information. Consult with Planning Staff if you have questions.

Required Signatures:

By signing this application, as the foresaid applicant or authorized agent:

- I certify that I have read and completely understand the application;
- I certify that the information contained in this application and its attachments are true and correct;
- I understand that all information provided on this form and all other documents submitted as part of my proposal is a matter of public record;
- I understand that copies of this information may be supplied upon request to an interested party.
- I understand that additional funds may be required through the course of the review for special studies, legal review costs, and/or engineering review.
- I understand that by submitting an application I am not guaranteed a place on any particular agenda. I further understand that the City Planner will place me on an agenda for review when the application is deemed substantially complete.

Will the proposed project cause 1 acre or more of site disturbance? __(Yes) _x_(No)

- **If Yes, applicant is responsible for any required Maine Construction General Permits and shall comply with the requirements of DEP Chapter 500 Stormwater Regulations, as they apply.**

Signature of Applicant: ___  **_____Date ___06/09/25_____**

Signature of Property Owner: ____ 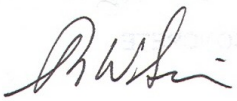 **_____Date ___06/09/25_____**

DIGITAL SUBMITTAL REQUIREMENTS FOR ALL SUBMITTALS:

A) PDF OF SIGNED APPLICATION

B) PDFs OF ALL DRAWING SETS AND OTHER REQUIRED SUBMITTAL ATTACHMENTS NOTED ABOVE

HARD-COPY SUBMITTAL REQUIREMENTS FOR PLANNING BOARD APPLICATIONS:

A) SEVEN (7) FULL-SIZE PAPER COPIES OF DRAWING SETS

DIGITAL SUBMITTAL REQUIREMENTS FOR FINAL APPROVAL:

A) INDIVIDUALLY NAMED PDFs OF EACH DRAWING (NOT A COMBINED PDF SET)

- Individual Drawing PDF Naming Format: 'PROJECT/SHEETSET NAME_INDIVDUAL DRAWING NAME.pdf'

B) PDF COPIES OF ALL PERMIT APPROVALS, APPLICATIONS, REPORTS, NARRATIVES, LETTERS, ETC.

C) FINAL CAD REFERENCE FILES IN DWG FORMAT (SURVEY & PROPOSED DESIGN LINEWORK)

- All drawings & CAD reference files must be to-scale and within the following coordinate systems:

- MAINE STATE PLANE WEST NAD83 (Horizontal Datum) & NAVD88 (Vertical Datum)

HARD-COPY SUBMITTAL REQUIREMENTS FOR FINAL APPROVAL:

A) THREE (3) FULL-SIZE PAPER COPIES OF INDIVIUDAL DRAWINGS REQUIRING BOARD SIGNATURE

B) ONE (1) FULL-SIZE PAPER COPY OF ENTIRE DRAWING SET FOR ENGINEERING RECORDS

PLEASE CONFIRM WITH PLANNING STAFF FOR CLARIFICATION

Attachment 2
Letter of Agent Authorization

UNIVERSITY OF NEW ENGLAND

Biddeford Campus
11 Hills Beach Road
Biddeford, ME 04005
(207) 283-0171 T

Portland Campus
716 Stevens Avenue
Portland, ME 04103
(207) 797-7261 T

May 29, 2023

Mr. Tom Saucier
Site Design Associates
23 Whitney Way
Topsham, Maine 04086

TO WHOM IT MAY CONCERN:

This letter authorizes Tom Saucier, Site Design Associates, to serve as an agent for University of New England for the purpose of permitting the proposed installation of a research pier and float on its Biddeford campus.

Sincerely,

Alan Thibeault
Vice president for University Operations

Attachment 3
Site Plan Checklist

CITY OF BIDDEFORD - SITE PLAN & SUBDIVISION APPLICATION DRAWING CHECKLIST *LAST REVISED: 11/26/2024*

CHECKLIST DIRECTIONS:

1. The following checklist must be completely filled out by the applicant and included on all preliminary and final Site Plan & Subdivision submittals. No checklist is required for sketch submitta
2. Applicant to confirm all of the items listed are included within the submittal Any missing items must have adequate reasoning to justify their absence
3. City to review applicant's submittal and checklist responses. Projects missing substantial submittal information with non-acceptable reasonir will be rejected and required to resubmit
4. Items in **BLACK** are required for 'Preliminary' approval & 'Final' approval
5. Items in **BLUE** are only required for 'Final' approval

SUBMITTAL INFORMATION - TO BE FILLED OUT BY APPLICANT	
Project Name:	University of New England (UNE) Marine Science Center Research Pie
Planning Board # (if available):	2024.34
Applicant Name/Info:	University of New England
Submittal #/Type (Prelim/Final):	Preliminary
Submittal Date:	6/10/2025

SUBMITTAL REQUIREMENT		APPLICANT RESPONSE			CITY REVIEW RESPONSE	
ITEM NUMBER	DESCRIPTION	INFORMATION PROVIDED (YES/NO)	LIST DRAWING SHEET NUMBER WHERE INFORMATION IS PROVIDED	REASON NOT PROVIDED/COMMENT	ACCEPTABLE (YES/NO-REVISE & RESUBMIT)	COMMENT
1	**GENERAL PLAN REQUIREMENTS**	YES				
A	Drawing specific legends (linetypes, hatches, etc.	YES	C-001, C-002			
B	Individual drawing layer control should be utilized: freeze/thawing, changing lineweights, and screening (i.e. screen existing layers on a proposed plan, freeze topography and underground utilities on a proposed site plan	YES	ALL			
C	North arrows, standard engineering scale viewports, scale bars, dated revision block	YES	ALL			
D	All drawings and surveys must be in the following coordinate systems: NAD83 Maine State Plane West (Horizontal) and NAVD88 (Vertical	YES	ALL			
E	Drawings need to be designed, signed & sealed by a Maine licensed professional engineer (PE); all boundary survey data needs to be performed by a licensed professional land surveyor (PLS)	YES	ALL			
2	**COVER SHEET**	YES				
A	Project Name & Property Address	YES	G-001			
B	Project Team Contact Information (Owner, Engineer, Contractor, etc.)	YES	G-001, G-002	Contractor contact info to be added at a later date		
C	Site Location Map	YES	G-001			
D	Sheet Set List of Drawings	YES	G-001			
E	Tax Map and Lot ID	YES	C-001			
F	Zoning & Shoreland Zone Information	YES	C-001			
G	Existing Use Description	YES	C-001			
H	Proposed Use Description	YES	C-003			
I	Required Waiver/Variances (Yes/No); if yes, plan must clearly list waivers/variances requesting	YES	G-001			
J	Name of Drainage Watershed	YES	C-001			
K	Within the MS4 Urbanized Area (Yes/No)	YES	C-001			
L	Natural resources (streams, wetlands, etc.) located on-site or adjacent to the property (Yes/No)	YES	C-001			
M	Within the 100-year Flood Zone (Yes/No)	YES	C-001			
N	Public Road Proposed (Yes/No)	NO	N/A	There are no public roads onsite		
O	Private Road Proposed (Yes/No)	YES	C-001			
P	Public Sewer Connection (Yes/No)	YES	C-001	There are no proposed improvements to the public sewer		
Q	Public Storm Drain Connection (Yes/No)	NO	N/A	There are no public storm drains onsite		
R	Limits of Disturbance in square feet and acres	YES	C-005			
S	Pervious Land Cover square footage, existing and propose	YES	C-003			
T	Impervious Land Cover square footage (Pavement/Gravel), existing and propose	YES	C-003			
U	Building Roof square footage, existing and propose	YES	C-001			
V	Assigned Planning Board Numbe	YES	G-001			
W	Estimated cut/fill earthwork volumes. If disturbing within the Flood Zone, a separate set of earthwork volumes required (overall site vs. within flood zone	YES	C-007, C-007			
3	**EXISTING CONDITIONS PLAN**					
A	Horizontal & Vertical Datums annotated (NAD83 & NAVD88)	YES	C-001			
B	Property & Right-of-Way Lines	YES	C-001			
C	Boundary line information (bearings, distances, etc.	YES	C-001			
D	Property pin and monumentation locations	YES	C-001			
E	Existing easements with proper ownership identifie	YES	C-001			
F	Road Names & Individual Lot Labels (Map, Lot, Owner, Acreage	YES	C-001			
G	Location of any Natural Resources and their respective buffers (wetlands, streams, etc	YES	C-001			
H	100-year Flood Zone Limits & Elevation	YES	C-001			
I	Existing contours with adequate contour labelling; minimum 1' contour interva	YES	C-001			
J	Existing building FFEs annotate	YES	C-001			
K	Spot elevations for all tie-in locations (curb cuts, property line	YES	C-001			
L	Existing buildings & structure	YES	C-001			
M	Existing pavement areas & number of parking space	YES	C-001			
N	Existing ADA ramp geometry, detectable warning plates, and ADA parking space	YES	C-001			
O	Existing site features (sidewalks, retaining walls, curbing, lightpoles, guide rails, dumpsters, fencing)	YES	C-001			
P	Existing signage and striping	YES	C-001			
Q	Existing underground utility locations (storm, sewer, force main, water, gas, elec, tel	YES	C-001			
R	Existing above-ground utility locations (manholes, catch basins, utility poles, hydrants, transformers, riprap)	YES	C-001			
S	Rim, invert in, invert out, pipe size, cardinal direction (N, E, S, W) information for any existing utility infrastructure being tied into (upstream/downstream/outfalls	YES	C-001			
T	Existing tree lines, street trees, free-standing trees (12" or larger diameter at breast height), and vegetation	YES	C-001			
U	Location of any borings, drinking wells, and monitoring well	YES	C-001			
4	**SITE DEMOLITION & EROSION CONTROL (E&SC) PLAN**					
A	Limits-of-disturbance outlined and acreage annotate	YES	C-005			
B	Location of any Natural Resources and their respective buffers (wetlands, streams, etc	YES	C-001			
C	100-year Flood Zone Limits	YES	C-001			
D	Callout existing site features to be demolished/removed/replace	YES	C-002			
E	Callout existing utilities to be demolished/removed/abandoned-in-plac	YES	C-002			
F	Hatch existing buildings and pavement to be remove	YES	C-002			
G	Construction Entrance location(s)	YES	C-005			
H	Perimeter E&SC control location(s) (i.e. silt fence, erosion berm mix	YES	C-005			
I	Stockpile and staging area(s) identified (with proper perimeter contro	YES	C-005			
J	Inlet protection location(s)	YES	C-005			
K	Note requiring contractor to implement dust control measures throughout constructio	YES	C-012			
L	Note requiring contractor to pave utility trenches within right-of-way within 3 days of excavation or prior to any rain event	N/A	N/A	No utilties proposed within right-of-way		
M	If groundwater expected, show dewatering/silt bag location(s); show temporary pumping routing	YES	C-014			

	N	If large development is proposed with an extensive underground stormwater conveyance network, identify how SWM infrastructure and BMPs will be protected during construction and if sediment traps/basins are needed	N/A		No extensive underground SWM infrastructure is proposed.		
5		**SITE PLAN/SUBDIVISION PLAN**	YES				
	A	Partial Site Plans needed for any viewport scale greater than 1"=20	YES	C-003			
	B	Existing property and right-of-way lines	YES	C-003			
	C	Proposed subdivision lot lines and labels	YES	C-003			
	D	Required Zoning Setbacks shown with dimensions and annotation	YES	C-003			
	E	Bulk requirement summary table (zoning/parking calculations	YES	C-003			
	F	Location of any Natural Resources and their respective buffers (wetlands, streams, etc.	YES	C-003			
	G	100-year Flood Zone Limits	YES	C-003			
	H	Proposed building outlines, door entrances and loading docks	YES	C-003			
	I	Proposed building labels	YES	C-003			
	J	Proposed road & sidewalk extents; provide clear annotation if roads will be public or private	YES	C-003			
	K	Proposed parking and accessible parking locations; annotate parking space count	YES	C-003			
	L	Proposed signage, parking striping, and traffic striping	YES	C-003			
	M	Detailed ADA ramp geometry, detectable warning surfaces, and ADA parking striping/signage; existing & proposed	NO		No ADA ramps or parking are proposed		
	N	Proposed site features (i.e. curbing, walls, fencing, guiderail, fire hydrant, transformers, light pole locations)	YES	C-003, C-004, C-006, C-007			
	O	Proposed landscaping; detailed landscaping design should be shown on separate plan	YES	C-015, C-016			
	P	Designated snow storage areas	NO		No snow storage areas are proposed		
	Q	Proposed dumpster locations and trash removal access	NO		No dumpsters or trash removal are proposed.		
	R	Linear dimensions of all drive aisles, sidewalk widths, parking spaces, loading dock	YES	C-003, C-006, C-007			
	S	Radial dimensions for all curbs, landscaped islands, sidewalk	YES	C-003			
	T	Public/private road centerline stationing shown, labelled every 0+50' with curve dat	YES	C-003, C-006, C-007			
	U	If Private Road is proposed, final recorded plans must clearly note that proposed private roads will not be submitted in the future for public acceptanc	NO		Will be provided at a later date		
	V	If Private Road is proposed, final recorded plans must clearly note that the City is not responsible for any maintenance, repair, plowing, or trash removal of proposed private roads	NO		Will be provided at a later date		
	W	Planning Board signature block for final recording	YES	G-001			
6		**GRADING PLAN**	YES				
	A	Partial Grading Plans needed for any viewport greater than 1"=20	YES	C-004, C-006, C-007			
	B	Limits-of-disturbance outlined and acreage annotated	YES	C-004, C-006, C-007			
	C	Proposed Building Labels with Individual Finished Floor Elevations (FFEs	YES	C-004, C-006, C-007			
	D	Existing contours with adequate contour labelling, screened; minimum 1' contour interva	YES	C-004, C-006, C-007			
	E	Proposed contours with adequate contour labelling; minimum 1' contour interva	YES	C-004, C-006, C-007			
	F	Detailed grading for all ditches, swales, outfalls, and ripra	YES	C-004, C-006, C-007			
	G	All proposed contours tie-into existing contours at limits-of-disturbance outlin	YES	C-004, C-006, C-007			
	H	Existing spot elevations for all asphalt, curb, and SWM BMP tie-in location	YES	C-004, C-006, C-007			
	I	Location of any Natural Resources and their respective buffers (wetlands, streams, etc.	YES	C-004, C-006, C-007			
	J	100-year Flood Zone Limits	YES	C-004, C-006, C-007			
	K	Proposed spot elevations for all important roadway geometric points (including but not limited to: parking/drive aisles, building corners/entrances, retaining walls, loading docks, EOP/curblines)	YES	C-004, C-006, C-007			
	L	Proposed spot elevations for all ADA ramp/landing/parking stall geometry point	N/A	No new ADA proposed			
	M	Proposed % slope arrows for all ADA parking spaces and sidewalk	N/A	No new parking proposed			
	N	Proposed longitudinal % slope arrows for drainage ditch centerline	YES	C-004, C-006, C-007			
	O	Proposed % slope arrows for roads, parking areas, and landscape tie-in area	YES	C-004, C-006, C-007			
	P	Estimated cut/fill earthwork volumes. If disturbing within the Flood Zone, a separate set of earthwork volumes required (overall site vs. within flood zone	YES	C-004, C-006, C-007			
7		**ROAD PROFILES (if public/private road proposed)**	YES				
	A	Existing surface; dashed and screened	YES	C-006, C-007			
	B	Proposed surface; continuous and bold	YES	C-006, C-007			
	C	Road design speed must be clearly identified	YES	C-006, C-007			
	D	Corresponding centerline stationing and curve data annotation	YES	C-006, C-007			
	E	All vertical curves must identify the proposed 'K' values and confirm they meet the minimum design speed thresholds listed in AASHTO's Green Book Tables 3-35 & 3-3	YES	C-006, C-007			
	F	Clear annotation if proposed road will be public or private	YES	C-006, C-007			
	G	If Private Road is proposed, plans must clearly note that proposed private roads will not be submitted in the future for public acceptanc	YES	C-003			
	H	If Private Road is proposed, plans must clearly note that the City is not responsible for any maintenance, repair, plowing, or trash removal of proposed private road	YES	C-003			
8		**UTILITY PLAN**					
	A	Existing underground utility locations; screened (storm, sewer, force main, water, gas, electric, telecom)	YES	C-004			
	B	Existing above-ground utility locations; screened (manholes, catch basins, utility poles, hydrants, riprap)	YES	C-004			
	C	Rim, invert in, invert out, pipe size, cardinal direction (N, E, S, W) information for any existing utility infrastructure being tied into (upstream/downstream/outfalls	YES	C-004			
	D	Proposed underground utility locations; bold (storm, sewer, force main, watergas, electric, telecom, lighting)	YES	C-004, ES1.1			
	E	Proposed above-ground utility locations; bold (manholes, catch basins, utility poles, hydrants, transformers, riprap)	YES	C-004			
	F	Proposed storm culverts, outfalls, and riprap locations and size	YES	C-004 to C-007			
	G	Storm/sewer structure labels must include: rim, inverts in, inverts out, pipe sizes, cardinal directions (N, E, S, W)	YES	C-004 to C-007			
	H	Storm/sewer pipe labels must include: linear footage, pipe size, material, slop	YES	C-004 to C-007	Additional information can be found in the SWM Report		
	I	Flow directional arrows for storm & sewer pipes	YES	C-004 to C-007			
	J	Proposed & existing site features shown that could conflict with proposed utilities (trees, signs, lightpoles, bollards, foundations, guiderails	YES	C-004 to C-007			
	K	All storm drains must be sized to convey the 25-year storm	YES	C-004 to C-007	See SWM Report		
	L	Sewer force main sizes and invert elevations	NO	N/A	No force main proposed		
	M	Sewer pump station locations, model, rim, inverts, pipe sizes, cardinal directions (N,E,S,W); additional details and hydraulic calculations required for any Public pump station proposed.	NO	N/A	No pump stations proposed		
	N	Locations, sizes, and elevations of any: grease traps, oil-water separators, septic systems, drinking wells	NO	N/A	None proposed		
	O	Proposed water sizes labelled	NO	N/A	None Proposed		
9		**UTILITY PROFILES**					
	A	Utility profiles required for**all** gravity storm drain and sewer pipes proposed: within the right-of-way, within private or public roads, for non-driveway culverts, and for any public infrastructure tie-ins	NO	N/A	No utilties proposed in ROW		

B	Existing surface; dashed and screened	NO	N/A	No utilties proposed in ROW		
C	Proposed surface; continuous and bold	NO	N/A	No utilties proposed in ROW		
D	Storm/sewer structure labels must include: rim, inverts in, inverts out, pipe sizes, cardinal directions (N, E, S, W)	NO	N/A	No utilties proposed in ROW		
E	Storm/sewer pipe labels must include: linear footage, pipe size, material, slop	NO	N/A	No utilties proposed in ROW		
F	Existing and proposed gravity pipe crossings shown; sizes labelled and depths/clearance annotated	NO	N/A	No pipe crossing proposed		
G	Existing and proposed electric/water/telecom/gas crossings shown at approximate depths; sizes labelled and depths/clearance annotatec	YES	ES1.1			
10	**DETAILS**					
A	Road section detail, including pavement/gravel depths & cross slope	YES	C-008, C-009, C-010			
B	Sidewalk, paver, crosswalk, and any other pavement section detail:	N/A	None proposed			
C	Pavement sawcut & shiplap details	YES	C-003, C-006, C-007			
D	Utility trench/backfill detai	YES	C-011			
E	All site feature details; curbing, retaining walls, fencing, guiderails, dumpsters, et	YES	C-011, C-013, C-014			
F	Signage, striping, and ADA details	N/A	N/A	No signage or striping proposec		
G	E&S notes and details	YES	C-012, C-013, C-014			
H	Utility structure details (manholes, cleanouts, fittings, handholes, transformer pads, hydrants)	YES	C-013, C-014			
I	Storm outfall & riprap details	YES	C-011			
J	Drainage ditch cross section identifying minimum depth, minimum bed width, and maximum side slopes	NO	C-013, C-014			
K	Pump station, grease trap, oil-water separator, septic, drinking well detail	N/A	N/A	None Proposed		
L	Conduit section details	N/A	N/A	None Proposed		
11	**LANDSCAPING, LIGHTING & PHOTOMETRIC PLANS**					
A	As required by ordinance; at a minimum: locations, counts, lighting models, and landscaping species must be identifiec	YES	C-015, C-016, ES1.1			
B	Landscaping & lighting details	YES	C-015, C-016, ES1.1			
12	**DOCUMENTS/REPORTS/CALCULATIONS**					
A	On initial preliminary submittal applications, applicant must submit a development review and inspection fee. Applicant to coordinate fee amount with City Planner prior to submittal. This fee will be drawn against to cover the following type of services throughout the project life cycle (and may require replenishing): i. 3rd Party City Peer-Review ii. Site Inspections during the permitting process iii. Erosion & Sediment Control Inspections during construction iv. Right-of-Way Inspections during construction	Yes				
B	Stormwater Management Report, including: 1. Predevelopment & Post-development Drainage Area Maps, including: a. Subdrainage areas delineated and labeled b. Points of Interest/Analysis shown and labeled c. Hatching for different land cover areas (impervious, pervious, gravel) within each applicable USDA soil boundary d. Time of concentration (Tc) paths & durations e. Four City-standardized stormwater summary tables 2. If any SWM water quality BMP or detention facility is proposed, hydrologic model exports/hydrographs must be submitted for the for the 2, 10, 25, & 100-year storm frequencies 3. Sizing calculations for any SWM water quality BMP or detention facility 4. A stormwater maintenance manual for any proposed SWM water quality BMP or detention facility, including: a. Annual maintenance requirements b. Annual inspection requirements by a licensed PE; noting that all inspection reports/logs need to be submitted to the Engineering Department by March 1st each following year, identifying what on-going maintenance has occurred and what remedial repairs are needed c. Signed Property Owner Agreement: including the current property owner's contact information and signature; it must be noted that all stormwater BMP maintenance requirements are linked to the property for perpetuity and transfer to any new ownership	Yes				
C	An approved 'Sewer Ability-to-Serve Letter' from the Engineering Department: i. Applicant to submit proposed sewer flow calculations per Maine's Subsurface Wastewater Disposal Rules, Chapter 241, Section 4 (Tables 4A & 4C	N/A		No new buildings/sewer conveyance proposed		
D	A Performance Guarantee Cost Estimate utilizing Planning's templat	YES				
E	For any Site Location of Development (SLODA) project, the applicant's submittal must mimic a formal submittal to DEP. Submit must abide to DEP's SLODA application and include DEP's SLODA Submittal Checklist (Form D)	YES				
F	25-year hydraulic calculations for all storm conveyance infrastructure (pipes, culverts, drainage ditches); starting tailwater conditions/documentation must be clearly identifie	YES				
K	Public sewer pump station sizing calculations and maintenance plai	N/A	No pump stations proposed	No pump stations proposed		
M	Grease trap sizing calculations	N/A	No grease traps proposed	No grease traps proposed		
N	Homeowner Association (HOA) agreement for any private road serving two (2) lots or more	N/A	No HOA	No HOA		
O	Summary list & copy of any required DOT/DEP/USACE permits & approvals	YES				

Attachment 4
Location Map

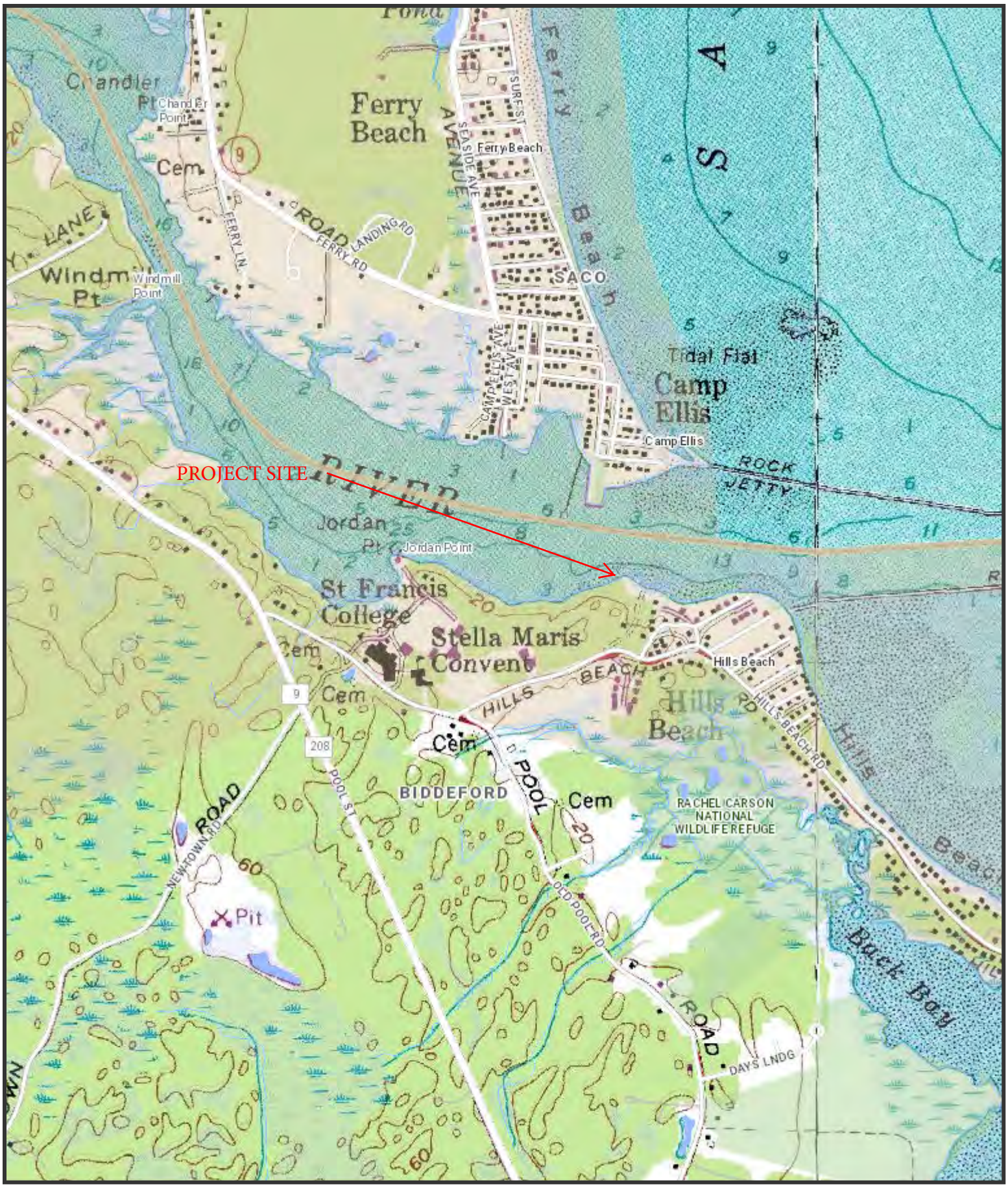

The Maine Department of Transportation provides this publication for information only. Reliance upon this information is at user risk. It is subject to revision and may be incomplete depending upon changing conditions. The Department assumes no liability if injuries or damages result from this information. This map is not intended to support emergency dispatch.

0.25 Miles

1 inch = 0.28 miles

Date: 6/8/2023
Time: 3:54:08 PM

Attachment 5
Deed

Excepting and reserving, however, from the last parcel described a small triangular parcel of land in the rear of the premises of Charles E. Roberts which triangular lot has a base of about 50 feet in length which is an extension of the northwesterly boundary of said Roberts lot; and has an altitude of about 100 feet in length which is the northeasterly side thereof and is located in the center of a ditch long supposed to be the rear line of the Roberts lot; and which has a hypotenuse which is coincident with the rear line of said Roberts lot and is the southerly side of said triangule, being the same premises conveyed by Blanche T. Beuscher and Olga M. DeHaven to the said Kenneth A. Littlefield and Barbara A. Littlefield, by their deed of mortgage dated on the twentieth (20) day of February 1958 and recorded in York Registry of Deeds, Book 1354, Page 447, but described under the aforementioned reference only as three certain lots or parcels of land, with buildings thereon, and mentioned as being the same premises conveyed on February 20th, 1958, by Kenneth A. and Barbara A. Littlefield to Blance T. Beuscher and Olga M. DeHaven, by Warranty Deed, Recorded Book 1362, Page 112; and that such entry was made and possession taken as aforesaid, for the avowed purpose of foreclosing said mortgage, because of a breach of the condition thereof.

Raymond E. Mealey

Madeline C. Mealey

STATE OF MAINE

COUNTY OF YORK, SS March 24, 1962 Signed and sworn to by the said Raymond E. Mealey and Madeline C. Mealey,

Before me. Maurice L. Shibles Notary Public (L.S.)
My Commission Expires Sept. 2, 1966

Recorded according to the original received April 6, 1962 at 11h. 58m. A. M. EL

KNOW ALL MEN BY THESE PRESENTS, THAT, COUVENT de la PRESENTATION de MARIE, a corporation organized and existing under the laws of the State of Maine and located at Biddeford, in the County of York and said State of Maine, in consideration of One Hundred Fifty Thousand Dollars ($150,000.00) paid by THE FRANCISCAN FATHERS OF MAINE, a corporation duly organized by law and having an established place of business at 605 Pool Road, in said Biddeford, the receipt whereof it does hereby acknowledge, does hereby give, grant, bargain, sell and convey, unto the said The Franciscan Fathers of Maine, its successors or assigns, forever, the following described property: I.R.S. One Hundred and Sixty Five Dollars

Parcel 1

A certain lot or parcel of land, with the buildings thereon, situated in

said Biddeford and bounded and described as follows:

BEGINNING at a point on the Northerly side of the Hill's Beach Road, so-called, in said Biddeford, said point being the Westerly corner of the land herein conveyed and being in the Southerly line of land formerly of one Finney and now of Couvent de la Presentation de Marie, and being marked by an iron stake driven into the ground; thence South eighty-two degrees eight minutes East (S 82° 08' E) two hundred fourteen and forty-six one-hundredths (214.46) feet by said Hill's Beach Road to an iron stake driven into the ground; thence North eighty-one degrees forty-two minutes East (N 81° 42' E) five hundred forty-five and five one-hundredths (545.05) feet by said Hill's Beach Road to an iron stake driven into the ground; thence South fifty degrees thirty-five minutes East (S 50° 35' E) two hundred thirty-eight and forty-seven one-hundredths (238.47) feet by said Hill's Beach Road to an iron stake driven into the ground and other land of this Grantor; thence North eighty-six degrees twenty-seven minutes East (N 86° 27' E) sixteen and ninety-one one-hundredths (16.91) feet by said other land of this Grantor to a drill hole into the ledge and land now or formerly of John J. Traynor; thence North three degrees thirty-three minutes West (N 3° 33' W) one hundred thirty-three and five tenths (133.5) feet by said land of John J. Traynor, land now or formerly of one Michael Reddy and a reserved street as shown on a plan of land of William A. Chadbourne, drawn by Z. G. Staples, July 14, 1874, and recorded in York County Registry of Deeds in Plan Book 2, Page 40, and by the stone wall to an iron stake driven into the ground at the Southwesterly corner of land now or formerly of William Libby; thence North twenty-two degrees forty-one minutes West (N 22° 41' W) one hundred twenty-eight and one-half (128½) feet by said land of William Libby, other land of this Grantor and by the stone wall to an angle in said stone wall; thence North fifty-five degrees fifty-seven minutes East (N 55° 57' E) three hundred ninety-three and nineteen one-hundredths (393.19) feet by said other land of this Grantor, by a reserved street as shown on said plan, and land now or formerly of Thomas Gallagher and by the fence and wall to an iron stake driven into the ground at the top of the bank; thence this same course to Saco River; thence Northerly, Northwesterly and Westerly by said River to an iron stake driven into the ground at a point of ledge and to said other land of this Grantor; thence South forty-one degrees East (S 41° E) three hundred thirty-nine and seven tenths (339.7) feet to an iron stake driven into the ground at the stone wall; thence South sixty-three degrees West (S 63° W) fifty-six and three tenths (56.3)feet by said stone wall to an iron stake driven into the ground; thence South sixty-nine degrees fifteen minutes West (S 69° 15' W) one hundred sixteen and one-half (116½) feet by said

wall to
forty m
(128.5)
sixty-e
tenths
North e
nine te
thence
seventy
into th
19' W)
into th
one hun
into th
W) one
of begi
of this

of the
Road;
sixtee
cel to
thence
sevent
Beach
twenty
of beg

calle
bound

by Z.
of th
dred
(50)
by la
E) or

wall to an iron stake driven into the ground; thence South fifty-three degrees forty minutes West (S 53° 40' W) one hundred twenty-eight and five tenths (128.5) feet by said wall to an iron stake driven into the ground; thence South sixty-eight degrees nineteen minutes West (S 68° 19' W) one hundred and four tenths (100.4) feet by said wall to an iron stake driven into the ground; thence North eighty-eight degrees four minutes West (N 88° 04' W) seventy-seven and nine tenths (77.9) feet by said wall to an iron stake driven into the ground; thence South seventy-four degrees twenty-three minutes West (S 74° 23' W) seventy-nine and two tenths (79.2) feet by said wall to an iron stake driven into the ground; thence South fifty-seven degrees nineteen minutes West (S 57° 19' W) ninety-five and one tenth (95.1) feet by said wall to an iron stake driven into the ground; thence South sixty-four degrees ten minutes West (S 64° 10' W) one hundred six and nine tenths (106.9) feet by said wall to an iron stake driven into the ground; thence South sixty-five degrees thirty minutes West (S 65° 30' W) one hundred forty-four and eight tenths (144.8) feet by said wall to the point of beginning. The last ten courses described being bounded by said other land of this Grantor. The above courses refer to the 1931 magnetic meridian.

Parcel 2

Also another certain lot of land, bounded and described as follows:

BEGINNING at an iron stake driven into the ground at the Southerly corner of the above described parcel and on the Northerly side of said Hill's Beach Road; thence North eighty-six degrees twenty-seven minutes East (N 86° 27' E) sixteen and ninety-one one-hundredths (16.91) feet by said above described parcel to a drill hole in the ledge and land now or formerly of John J. Traynor; thence South three degrees thirty-three minutes East (S 3° 33' E) fifteen and seventy-five one-hundredths (15.75) feet by said land of Traynor to said Hill's Beach Road; thence North fifty degrees thirty-five minutes West (N 50° 35' W) twenty-three and eleven one-hundredths (23.11) feet by said road to the point of beginning.

Parcel 3

Also another certain lot or parcel of land, situated at Hill's Beach, so-called, in said Biddeford, and adjoining the first above described parcel, bounded and described as follows:

BEGINNING at the Northwest corner of Lot #18, on a plan of land made by Z. G. Staples for William A. Chadbourne, dated July 14, A. D. 1874, at land of the late Selucus Adams and S. S. Mitchell; thence running Southerly one hundred (100) feet to Lot #17 on said plan; thence Westerly by last named lot fifty (50) feet; thence North forty-eight degrees West (N 48° W) forty-eight (48) feet by land of said Adams; thence North fifty-one and one-half degrees East (N 51½° E) one hundred six (106) feet by land of said Adams and Mitchell to the place of

48
pg 146

Book 1484

beginning, and containing about five thousand four hundred and twenty-four (5,424) square feet, being the same parcel of land as described in deed of James B. Marr and others to Caroline P. Adams, dated April 1, 1891 and recorded in York County Registry of Deeds in Book 443, Page 88.

The above described premises were conveyed to the within Grantor by Les Soeurs de la Presentation de Marie by deed of Warranty, dated September 30, 1932 and recorded in York County Registry of Deeds in Book 834, Page 67.

Parcel 4

Also another certain lot or parcel of land, together with the buildings thereon, situated in said Biddeford and known as the old Ralph Tristram Jordan place situated on the northeasterly side of the Pool Road, so-called, bounded on the southwesterly side by said Pool Road; southeasterly by the road to the beach and land formerly of Mrs. Horace Woodman; on the northeasterly side by the Saco River; and on the northwesterly side by land, now or formerly of J. B. Coolbroth.

For more particular description of the premises hereinabove last described, reference is made to decree of Supreme Judicial Court of Maine in the matter of Hanford E. Finney against claiments known and unknown dated October 3, 1919, and recorded in said York County Registry of Deeds, Book 671, Page 374.

All fixtures and articles of whatever nature permanently attached to said buildings are included in this conveyance.

TO HAVE AND TO HOLD the aforegranted and bargained premises, with all privileges and appurtenances thereof to the said The Franciscan Fathers of Maine, its successors or assigns, to its and their use and behoof forever.

AND it does COVENANT with the said Grantee, its successors or assigns, that it is lawfully seized in fee of the premises; that they are free of all encumbrances; that it has good right to sell and convey the same to the said Grantee to hold as aforesaid; and that it shall and will Warrant and Defend the same to the said Grantee, its successors or assigns forever, against the lawful claims and demands of all persons.

IN WITNESS WHEREOF, the said Couvent de la Presentation de Marie has caused this instrument to be executed and its corporate seal affixed thereto by - - its Treasurer, thereunto duly authorized, this eighteenth day of April, in the year of our Lord one thousand nine hundred and sixty-two.

Signed, Sealed and Delivered
in Presence of

Harold D. Carroll

COUVENT de la PRESENTATION de MARIE
(Corporate Seal)
By Sister St. Leon of Rome
Leona Lafleur
Its Treasurer, thereunto duly authorized.

Attachment 6
Letter of Financial Capacity

UNIVERSITY OF NEW ENGLAND

Biddeford Campus
11 Hills Beach Road
Biddeford, ME 04005
(207) 283-0171 T

Portland Campus
716 Stevens Avenue
Portland, ME 04103
(207) 797-7261 T

April 14, 2025

To Whom It May Concern:

The University of New England plans to construct a research pier facility, along with an associated access road, on its Biddeford Campus. This new facility will have an estimated total project cost of $5,500,000. The University of New England has received a federal appropriation for $3,500,000 for this project, a and another $1,000,000 has already been received in private donations. The remainder of the project will be financed by the university.

Sincerely,

Alan Thibeault
Vice President for University Operations

Attachment 7
Stormwater Management Report



Stormwater Management Report

UNE Marine Science Center Pier

Submitted to:
University of New England
11 Hills Beach Road
Biddeford, ME 04005

Submitted by:
GEI Consultants, Inc.
5 Milk Street
Portland, ME 04101
207-797-8901

September 2023
Revision C. June 2025
Project 2203703

STATE OF MAINE
BRIAN M. MCDEVITT
PE18260
LICENSED
PROFESSIONAL ENGINEER
6/9/2025



Brian McDevitt, P.E.
Senior Civil Engineer

Daniel J. Bannon, P.E. CFM
Project Manager / Sr. Waterfront Engineer

Table of Contents

1. Introduction **2**

2. Methodology **5**

3. Pre-Development Conditions **6**

4. Post-Development Conditions **8**

5. Stormwater Management **10**

6. Conclusions **14**

Appendices

A. USDA NRCS Soil Survey Report
B. Pre-Development HydroCAD Calculations
C. Post-Development HydroCAD Calculations
D. Inspection and Maintenance Plan

Drawings

SW-01 PRE-DEVELOPMENT DRAINAGE PLAN
SW-02 POST-DEVELOPMENT DRAINAGE PLAN
SW-03 TREATMENT AREA PLAN

C-001 EXISTING CONDITIONS PLAN
C-002 DEMOLITION AND CONSTRUCTION STAGING
C-003 SITE PLAN
C-004 GRADING AND DRAINAGE PLAN
C-005 EROSION CONTROL PLAN
C-006 ACCESS ROAD PLAN AND PROFILE STA 1+00 TO MATCHLINE STA 4+00
C-007 ACCESS ROAD PLAN AND PROFILE MATCHLINE STA 4+00 TO STA 6+60
C-008 ACCESS ROAD TYPICAL SECTION
C-009 ACCESS ROAD SECTIONS 2+00 TO 3+75
C-010 ACCESS ROAD SECTIONS 4+00 TO 5+75
C-011 SITE DETAILS I
C-012 EROSION CONTROL NOTES
C-013 EROSION CONTROL DETAILS I
C-014 EROSION CONTROL DETAILS II
C-015 REVEGETATION PLAN
C-016 REVEGETATION NOTES, DETAILS, AND SCHEDULES

DJB:BM:bdp

B:\Working\UNIVERSITY OF NEW ENGLAND\2203703 UNE Marine Science Center Pier\06_REGULATORY\Stormwater\UNE MSC Stormwater Report Rev. 06-05-2025.docx

1. Introduction

The University of New England (UNE) campus is located along the Saco River in Biddeford, ME. The Marine Science Center is located on the waterfront at the easterly end of campus (Fig. 1) approximately opposite Camp Ellis in Saco. To support MSC research activities, UNE proposes to construct a pier from the shore adjacent to the MSC into the Saco River to provide an all-tide access facility for small and shallow draft vessels (skiffs, landing craft, up to approximately 3-foot draft), with tidally-restricted access for larger vessels.



Fig. 1. Aerial Photo of University of New England Marine Science Center Waterfront

In 2008-2010, UNE worked with Baker Design Consultants (BDC) to undertake a concept planning study for the proposed pier. In this study, nine alternative designs were developed for water access facilities along the UNE waterfront consisting of various configurations of piers, boat ramps, and upland access and support facilities. The alternatives were evaluated on a range of criteria including technical criteria, functionality, constructability, cost and others to identify a preferred facility location. The nine alternatives evaluated through this study are shown in Fig. 2. At the conclusion of this study, Site 7 (directly in front of the Marine Science Center building) was identified as the preferred facility location (Site) to develop a new pier facility that would consist of a pile-supported pier extending from shore out into the Saco River.

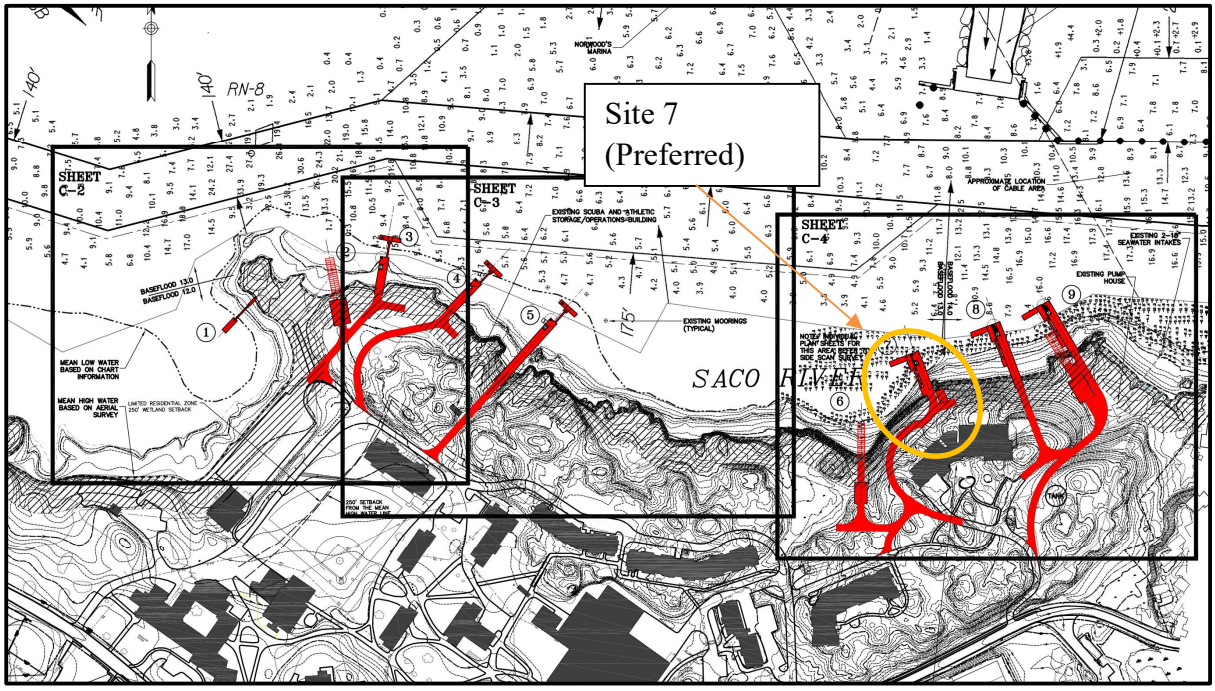

Fig. 2. Pier Location Alternatives from BDC Feasibility Study

In 2015-2016, UNE worked with BDC to undertake further design studies for a pier at the preferred location to investigate structure dimensions, orientation, rough order of magnitude costs, and impacts to coastal resources and features. As part of this evaluation, a preliminary geotechnical investigation was undertaken by GZA Geoenvironmental that included one water boring, two probes, and four test pits. At the conclusion of this phase of work, three alternative layouts were developed and reviewed with staff from UNE, the City of Biddeford, and the Saco River Corridor Commission and memorialized in a memo from BDC dated March 22, 2016.

In February 2022, UNE resumed design of the new proposed pier working with GEI Consultants to confirm conceptual layout for the pier and access road, and undertake design through 100% design and bid documents, as well as coordinate with UNE's consultant Site Design Associates for permitting of the proposed facility.

The proposed facility includes the following:

1. A pile supported pier structure extending from shore into the Saco River. The proposed pier includes an approximately 130-foot-long approach section extending from shore and an 80-foot long pier head section oriented roughly parallel to the direction of flow in the river. The pier consists of a concrete superstructure on steel pipe piles, with timber fender piles for vessel berthing and floating docks, and a pile supported gangway lifting beam to allow the gangway ramp to be temporarily removed from the water.

2. A floating dock system consisting of one 8-foot by 24-foot float, one 8-foot by 26-foot 10-inch float, and one 12-foot by 30-foot gangway landing float to provide all-tide vessel access for UNE's vessels on the west side of the pier, and a single 6-foot by 20-foot floating dock to provide a tie-up location for the City of Biddeford Fire Boat on the east side of the pier.
3. An 80-foot by 5-foot gangway to provide ADA compliant access to the float system.
4. An upland access road connecting the existing road at the MSC to the proposed pier, including associated site grading, drainage, and stormwater management features.

2. Methodology

Technical Release No. 22 (TR20) was used to calculate the existing and developed runoff from the project area. Hydrographs have been generated for the 2, 10, and 25-year frequency design storm events utilizing the NRCS Type III storm distribution and the 24-hour regional data from York County's rainfall data as required by MaineDEP. The rainfall amounts for York County are listed below:

Table 1-Existing 24 Hour Rainfall Frequency			
Rainfall amounts in Inches			
Design Storm	***2-Year***	***10-Year***	***25-Year***
	3.21	4.83	6.11

The following guidelines were utilized in the design of the Site's stormwater measures and BMPs (MaineDEP Stormwater Guidelines, Chapter 500):

1. Waiver of the flooding standard. A project is eligible for a waiver from the flooding standard if it discharges to a coastal wetland, a great pond, or a major river segment. A waiver is available for a project in the watershed of a coastal wetland, a great pond, or a major river segment provide the applicant demonstrates that the project convey stormwater exclusively in sheet flow, in a manmade open channel or in a piped system directly into one of these resources.
2. The redistribution of stormwater discharges standard will be met by discharging to a level spreader. The peak stormwater flow rate to a level spreader due to runoff from a 10-year, 24-hours storm must be less that 0.25 cubic feet per second (0.25 cfs) per foot length of level spreader.
3. Project will meet the erosion and sedimentation control standards found in Maine Department of Environmental Protection Guidelines, Chapter 500, Appendix A.

3. Pre-Development Conditions

1. Land Use

   Presently, the Site is the location of the University of New England Girard Marine Science Center. However, the existing buildings and parking lots exist outside of the limits of this project. Runoff generated from the buildings and parking lots in conveyed via underground pipes to the south, away from the Saco River.

   The proposed project limits currently consists of predominantly wooded areas. The southeast corner of the Site contains gravel path.

2. Topography

   The Site is mainly comprised of steeply sloped wooded areas with slopes near 20% for most of the Site. The Site mostly slopes to the north towards the Saco River/Atlantic Ocean. Per the NRCS WebSoil Survey, the Site is comprised almost completely of sandy, stony soil. These sandy soils are rated as Hydrologic Group D. A copy of the Web Soil Survey can be found in the Appendices.

3. Existing Drainage Area

   Presently, the runoff from the Site flows via overland flow to three different points of analysis, hereafter known as DP1, DP2 and DP3, with associated drainage areas 1S, 2S and 3S, respectively. The predevelopment drainage areas are described below:

   A map entitled Pre-Development Drainage Plan is included in the Drawings section of this report. Additionally, the HydroCAD model and calculations can also be found in the Appendix.

   Predevelopment Area 1S is the smallest of the existing drainage areas and is ±0.460 acres which consists of wooded areas. Runoff from Predevelopment Area 1S flows overland from the rear of the Girard Marine Science Center to the northeast and directly into the Saco River/Atlantic Ocean at DP1.

   Predevelopment Area 2S is ±0.637 acres and can be found in the middle of the Site. Predevelopment Area 2S consists of all wooded areas. Runoff from Predevelopment Area 2S flows via overland flow from a ledge in the middle of the Site to the north to the Saco River/Atlantic Ocean at DP2.

Predevelopment Area 3S is ±1.461 acres and comprises the eastern most portion of the Site. Predevelopment Areas 3S consists mostly of wooded areas and contains a gravel path leading to the lower lying wetlands and sand beaches along the Saco River/Atlantic Ocean. Runoff from Predevelopment Area 3S from the paved walkway at the Girard Marine Science Center to the northeast to the Saco River/Atlantic Ocean at DP3.

Tables 2A, 2B and 2C below list the total runoff for each Predevelopment Area:

Table 2A-Predevelopment Area 1S Runoff
Rainfall amounts in cubic feet per second

Pre-Development Total	***2-Year***	***10-Year***	***25-Year***	***100-Year***
Peak Runoff Rate (cfs)	0.71	1.44	2.07	3.31

Table 2B-Predevelopment Area 2S Runoff
Rainfall amounts in cubic feet per second

Pre-Development Total	***2-Year***	***10-Year***	***25-Year***	***100-Year***
Peak Runoff Rate (cfs)	0.74	1.51	2.17	3.50

Table 2C-Predevelopment Area 3S Runoff
Rainfall amounts in cubic feet per second

Pre-Development Total	***2-Year***	***10-Year***	***25-Year***	***100-Year***
Peak Runoff Rate (cfs)	2.39	4.58	6.44	10.05

4. Post Development Conditions

1. Land Use

When fully developed, the Site will contain the following improvements:

a. A pile supported pier structure extending from shore into the Saco River. The proposed pier includes an approximately 130-foot-long approach section extending from shore and an 80-foot long pier head section oriented roughly parallel to the direction of flow in the river. The pier consists of a concrete superstructure on steel pipe piles, with timber fender piles for vessel berthing and floating docks, and a pile supported gangway lifting beam to allow the gangway ramp to be temporarily removed from the water.
b. A floating dock system consisting of one 8-foot by 24-foot float, one 8-foot by 26-foot 10-inch float, and one 12-foot by 30-foot gangway landing float to provide all-tide vessel access for UNE's vessels on the west side of the pier, and a single 6-foot by 20-foot floating dock to provide a tie-up location for the City of Biddeford Fire Boat on the east side of the pier.
c. An 80-foot by 5-foot gangway to provide ADA compliant access to the float system.
d. An upland superelevated access road connecting the existing road at the MSC to the proposed pier, including associated site grading, drainage, and stormwater management features.

These improvements will result in a total increase in impervious area of 0.249 acres. The increase in impervious area will be managed by the two bioretention filter cells to the north of the Girard Marine Science Center. Runoff will be conveyed to the bioretention filter cells via proposed vegetated swales along the low side of the superelevated access road.

The bioretention filter cells will slowly release captured stormwater via underground pipe into the Saco River/Atlantic Ocean.

2. Drainage Areas

The map entitled Post-Development Drainage Plan delineating all developed drainage areas can be found in the Drawings section of this report. For analysis, the Site was broken up into 5 different drainage areas hereafter known as 1S, 2S, 3S, 4S, and 5S.

Post Development Area 1S contains the area that conveys runoff to the western Bioretention Filter Cell B. This area contains impervious areas from the access road and the proposed vegetated areas behind the Girard Marine Science Center. Runoff is conveyed to the Bioretention Filter Cell B via vegetated swale. Runoff captured by the bioretention filter cell will be treated and slowly released via underground pipe to the outfall under the proposed pier and into the Saco River/Atlantic Ocean near DP1.

Post Development Area 2S contains the areas to the northwest of the Site that conveys runoff via over land flow from the Girard Marine Science Center to DP1. This area contains small impervious areas as it contains the northern shoulder of the access road and the transition from access road to pier. Runoff from this area will not be managed for water quality or peak rate reduction.

Post Development Area 3S contains the area that conveys runoff to the eastern Bioretention Filter Cell A. This area contains impervious area from the access road and the proposed vegetated areas behind and to the east of the Girard Marine Science Center. Runoff is conveyed to the Bioretention Filter Cell A via vegetated swale. Runoff captured by the bioretention filter cell will be treated and slowly released via underground pipe to the outfall to the north where it will run through a level spreader to further reduce peak flow rate. Runoff will leave the level spreader and reach the Saco River/Atlantic Ocean via overland flow near DP2.

Post Development Area 4S contains the area to the northeast of the Site that conveys runoff via over land flow from the Girard Marine Science Center to DP2. This area contains small impervious areas as it contains the northern shoulder of the access road and the level spreader. Runoff from this area will not be managed for water quality or peak rate reduction.

Post Development Drainage Area 5S contains the area to the eastern portion of the Site. This this area contains the southernmost portion of the proposed access road and the existing gravel path. Runoff from this area will be conveyed via overland flow to the Saco River/Atlantic Ocean at DP3.

5. Stormwater Management

1. Stormwater Quantity

The bioretention filter cells are proposed to reduce the peak runoff rate of the 2, 10, and 25-year storms to treat stormwater runoff from the Site in accordance with DEP standards. Despite this, efforts were made to minimize the peak runoff rate from the Site. The tables below summarize the peak rate of runoff for the Site:

TABLE No. 3A
Managed Total Peak Discharge Summary of the Proposed Conditions to Discharge Point DP1

Storm Event	2-Year		10-Year		25-Year		100-Year	
	Existing	**Proposed**	**Existing**	**Proposed**	**Existing**	**Proposed**	**Existing**	**Proposed**
Peak Runoff Rate (cfs)	0.71	1.02	1.44	1.85	2.07	2.54	3.31	3.88

TABLE No. 3B
Managed Total Peak Discharge Summary of the Proposed Conditions to Discharge Point DP2

Storm Event	2-Year		10-Year		25-Year		100-Year	
	Existing	**Proposed**	**Existing**	**Proposed**	**Existing**	**Proposed**	**Existing**	**Proposed**
Peak Runoff Rate (cfs)	0.74	1.24	1.51	2.31	2.17	3.22	3.50	4.98

TABLE No. 3C
Managed Total Peak Discharge Summary of the Proposed Conditions to Discharge Point DP3

Storm Event	2-Year		10-Year		25-Year		100-Year	
	Existing	**Proposed**	**Existing**	**Proposed**	**Existing**	**Proposed**	**Existing**	**Proposed**
Peak Runoff Rate (cfs)	2.39	2.23	4.58	4.26	6.44	5.99	10.05	9.35

The tables above show a relatively minor increase in the peak rate of stormwater runoff subsequent to development. The northern most outfall will discharge to a level spreader which will create sheet flow into the Saco River/Atlantic Ocean. The western most outfall will outlet through the pier concrete abutment. Because the area downgradient of the outlets is stable rock, there will be no impacts due to the minor

increase in runoff. Stormwater runoff from each of the subcatchments adjacent to the river is not considered a point discharge in either the existing or proposed conditions, and is dispersed over the entire frontage along the river.

Since this development outlets directly to a major river segment/ocean, the flooding standard is typically waived by DEP (Chapter 500-Section F.3.a). The City also typically waives the need to provide detention of stormwater runoff from this parcel of UNE's property due to the tidal nature of the receiving waters. A waiver has been requested.

2. Stormwater Quality

The project proposes to treat 76% of impervious development and 72% of all new development. As discussed in the preapplication meeting, the proposed development will be treated as a linear portion of the project. For a linear project, the minimum treatment level required is 70% for impervious development and 50% of all new development. Water Quality treatment level are found in the tables below.

TABLE No. 4

Water Quality Treatment Level

Subcatchment Area	Impervious Area (SF)	Landscaped Area (SF)	Developed Area (SF)	Filter Area Required (SF)	Filter Area Provided (SF)	Water Quality Volume Required (CF)	Water Quality Volume Provided (CF)	Sediment Forebay Volume Required (CF)	Sediment Forebay Volume Provided (CF)	BMP
1S	4,917	4,915	9,832	344	854	574	200			Bioretention Filter
2S	1,238	10,250	11,488	267	-	445	-			-
3S	4,476	8,889	13,365	402	565	669	380	144	115	Bioretention Filter
4S	295	17,234	17,529	359	-	599	-			-
5S	6,273	52,906	59,179	1,372	-	2,286	-			-
Total Treated	**13,071**	**13,804**	**80,203**	930	-	1,549				
Total Developed Impervious Area	**17,199**									
Total Developed Area	**111,393**									
Percent Developed Area Treated	**72%**									
Percent Developed Impervious Area Treated	**76%**									

3. Erosion and Sedimentation Control

BMP's such as stabilized construction entrance, silt fence and/or filter berms of erosion control mix, riprap pipe inlet and outlet protection, turf reinforcement matting, mulch and permanent seeding will be used to prevent erosion and downstream migration of sediment during construction. The locations of temporary and permanent erosion control measures are erosion and sedimentation control notes

and details are shown on the design drawing set.

4. Inspection and Maintenance

   The University of New England will be responsible for maintaining the stormwater facilities for the project. An Inspection and Maintenance Plan is included in the Appendix. The plan includes a draft of the Stormwater Drainage System Maintenance Agreement, to be finalized and recorded as a condition of approval.

6. Conclusions

The stormwater management for this project included a variety of BMPs to control both the quantity and quality of stormwater runoff. The HydroCAD calculations show a minimal increase in the stormwater runoff from the proposed Site however the Stormwater Quantity requirement can be waved since this development discharges directly to a major river segment/ocean, the flooding standards can be waived (Chapter 500-Section F.3.a).

Stormwater treatment BMPs have been designed to treat stormwater runoff from more than 70% of the developed impervious area with additional treatment credit from the implementation of Low Impact Development Measures. Based on the information provided, no adverse impacts to downstream receiving bodies are anticipated.

Appendix A

NRCS Web Soil Survey Report

United States Department of Agriculture

NRCS

Natural Resources Conservation Service

A product of the National Cooperative Soil Survey, a joint effort of the United States Department of Agriculture and other Federal agencies, State agencies including the Agricultural Experiment Stations, and local participants

Custom Soil Resource Report for York County, Maine



Preface

Soil surveys contain information that affects land use planning in survey areas. They highlight soil limitations that affect various land uses and provide information about the properties of the soils in the survey areas. Soil surveys are designed for many different users, including farmers, ranchers, foresters, agronomists, urban planners, community officials, engineers, developers, builders, and home buyers. Also, conservationists, teachers, students, and specialists in recreation, waste disposal, and pollution control can use the surveys to help them understand, protect, or enhance the environment.

Various land use regulations of Federal, State, and local governments may impose special restrictions on land use or land treatment. Soil surveys identify soil properties that are used in making various land use or land treatment decisions. The information is intended to help the land users identify and reduce the effects of soil limitations on various land uses. The landowner or user is responsible for identifying and complying with existing laws and regulations.

Although soil survey information can be used for general farm, local, and wider area planning, onsite investigation is needed to supplement this information in some cases. Examples include soil quality assessments (http://www.nrcs.usda.gov/wps/portal/nrcs/main/soils/health/) and certain conservation and engineering applications. For more detailed information, contact your local USDA Service Center (https://offices.sc.egov.usda.gov/locator/app?agency=nrcs) or your NRCS State Soil Scientist (http://www.nrcs.usda.gov/wps/portal/nrcs/detail/soils/contactus/?cid=nrcs142p2_053951).

Great differences in soil properties can occur within short distances. Some soils are seasonally wet or subject to flooding. Some are too unstable to be used as a foundation for buildings or roads. Clayey or wet soils are poorly suited to use as septic tank absorption fields. A high water table makes a soil poorly suited to basements or underground installations.

The National Cooperative Soil Survey is a joint effort of the United States Department of Agriculture and other Federal agencies, State agencies including the Agricultural Experiment Stations, and local agencies. The Natural Resources Conservation Service (NRCS) has leadership for the Federal part of the National Cooperative Soil Survey.

Information about soils is updated periodically. Updated information is available through the NRCS Web Soil Survey, the site for official soil survey information.

The U.S. Department of Agriculture (USDA) prohibits discrimination in all its programs and activities on the basis of race, color, national origin, age, disability, and where applicable, sex, marital status, familial status, parental status, religion, sexual orientation, genetic information, political beliefs, reprisal, or because all or a part of an individual's income is derived from any public assistance program. (Not all prohibited bases apply to all programs.) Persons with disabilities who require

alternative means for communication of program information (Braille, large print, audiotape, etc.) should contact USDA's TARGET Center at (202) 720-2600 (voice and TDD). To file a complaint of discrimination, write to USDA, Director, Office of Civil Rights, 1400 Independence Avenue, S.W., Washington, D.C. 20250-9410 or call (800) 795-3272 (voice) or (202) 720-6382 (TDD). USDA is an equal opportunity provider and employer.

Contents

Preface.....2
How Soil Surveys Are Made.....5
Soil Map.....8
Soil Map.....9
Legend.....10
Map Unit Legend.....11
Map Unit Descriptions.....11
York County, Maine.....13
Ba—Beaches, sand.....13
LyC—Lyman-Rock outcrop complex, 8 to 15 percent slopes.....13
LyE—Lyman-Rock outcrop complex, 15 to 80 percent slopes.....15
UH—Urban land-Hooksan complex, 0 to 8 percent slopes.....17
W—Water bodies.....18

How Soil Surveys Are Made

Soil surveys are made to provide information about the soils and miscellaneous areas in a specific area. They include a description of the soils and miscellaneous areas and their location on the landscape and tables that show soil properties and limitations affecting various uses. Soil scientists observed the steepness, length, and shape of the slopes; the general pattern of drainage; the kinds of crops and native plants; and the kinds of bedrock. They observed and described many soil profiles. A soil profile is the sequence of natural layers, or horizons, in a soil. The profile extends from the surface down into the unconsolidated material in which the soil formed or from the surface down to bedrock. The unconsolidated material is devoid of roots and other living organisms and has not been changed by other biological activity.

Currently, soils are mapped according to the boundaries of major land resource areas (MLRAs). MLRAs are geographically associated land resource units that share common characteristics related to physiography, geology, climate, water resources, soils, biological resources, and land uses (USDA, 2006). Soil survey areas typically consist of parts of one or more MLRA.

The soils and miscellaneous areas in a survey area occur in an orderly pattern that is related to the geology, landforms, relief, climate, and natural vegetation of the area. Each kind of soil and miscellaneous area is associated with a particular kind of landform or with a segment of the landform. By observing the soils and miscellaneous areas in the survey area and relating their position to specific segments of the landform, a soil scientist develops a concept, or model, of how they were formed. Thus, during mapping, this model enables the soil scientist to predict with a considerable degree of accuracy the kind of soil or miscellaneous area at a specific location on the landscape.

Commonly, individual soils on the landscape merge into one another as their characteristics gradually change. To construct an accurate soil map, however, soil scientists must determine the boundaries between the soils. They can observe only a limited number of soil profiles. Nevertheless, these observations, supplemented by an understanding of the soil-vegetation-landscape relationship, are sufficient to verify predictions of the kinds of soil in an area and to determine the boundaries.

Soil scientists recorded the characteristics of the soil profiles that they studied. They noted soil color, texture, size and shape of soil aggregates, kind and amount of rock fragments, distribution of plant roots, reaction, and other features that enable them to identify soils. After describing the soils in the survey area and determining their properties, the soil scientists assigned the soils to taxonomic classes (units). Taxonomic classes are concepts. Each taxonomic class has a set of soil characteristics with precisely defined limits. The classes are used as a basis for comparison to classify soils systematically. Soil taxonomy, the system of taxonomic classification used in the United States, is based mainly on the kind and character of soil properties and the arrangement of horizons within the profile. After the soil

scientists classified and named the soils in the survey area, they compared the individual soils with similar soils in the same taxonomic class in other areas so that they could confirm data and assemble additional data based on experience and research.

The objective of soil mapping is not to delineate pure map unit components; the objective is to separate the landscape into landforms or landform segments that have similar use and management requirements. Each map unit is defined by a unique combination of soil components and/or miscellaneous areas in predictable proportions. Some components may be highly contrasting to the other components of the map unit. The presence of minor components in a map unit in no way diminishes the usefulness or accuracy of the data. The delineation of such landforms and landform segments on the map provides sufficient information for the development of resource plans. If intensive use of small areas is planned, onsite investigation is needed to define and locate the soils and miscellaneous areas.

Soil scientists make many field observations in the process of producing a soil map. The frequency of observation is dependent upon several factors, including scale of mapping, intensity of mapping, design of map units, complexity of the landscape, and experience of the soil scientist. Observations are made to test and refine the soil-landscape model and predictions and to verify the classification of the soils at specific locations. Once the soil-landscape model is refined, a significantly smaller number of measurements of individual soil properties are made and recorded. These measurements may include field measurements, such as those for color, depth to bedrock, and texture, and laboratory measurements, such as those for content of sand, silt, clay, salt, and other components. Properties of each soil typically vary from one point to another across the landscape.

Observations for map unit components are aggregated to develop ranges of characteristics for the components. The aggregated values are presented. Direct measurements do not exist for every property presented for every map unit component. Values for some properties are estimated from combinations of other properties.

While a soil survey is in progress, samples of some of the soils in the area generally are collected for laboratory analyses and for engineering tests. Soil scientists interpret the data from these analyses and tests as well as the field-observed characteristics and the soil properties to determine the expected behavior of the soils under different uses. Interpretations for all of the soils are field tested through observation of the soils in different uses and under different levels of management. Some interpretations are modified to fit local conditions, and some new interpretations are developed to meet local needs. Data are assembled from other sources, such as research information, production records, and field experience of specialists. For example, data on crop yields under defined levels of management are assembled from farm records and from field or plot experiments on the same kinds of soil.

Predictions about soil behavior are based not only on soil properties but also on such variables as climate and biological activity. Soil conditions are predictable over long periods of time, but they are not predictable from year to year. For example, soil scientists can predict with a fairly high degree of accuracy that a given soil will have a high water table within certain depths in most years, but they cannot predict that a high water table will always be at a specific level in the soil on a specific date.

After soil scientists located and identified the significant natural bodies of soil in the survey area, they drew the boundaries of these bodies on aerial photographs and

identified each as a specific map unit. Aerial photographs show trees, buildings, fields, roads, and rivers, all of which help in locating boundaries accurately.

Soil Map

The soil map section includes the soil map for the defined area of interest, a list of soil map units on the map and extent of each map unit, and cartographic symbols displayed on the map. Also presented are various metadata about data used to produce the map, and a description of each soil map unit.

Soil Map


70° 23' 1" W
70° 22' 46" W
388070
388100
388130
388160
388190
388220
388250
388280
388310
388340
388370
388400
43° 27' 38" N
43° 27' 31" N
4812900
4812870
4812840
4812810
4812780
4812750
4812720
4812690
W
Ba
UH
LyE
LyC
Soil Map may not be valid at this scale.
Map Scale: 1:1,520 if printed on A landscape (11" x 8.5") sheet.
N
Meters
0 20 40 80 120
Feet
0 50 100 200 300
Map projection: Web Mercator Corner coordinates: WGS84 Edge tics: UTM Zone 19N WGS84

MAP LEGEND

Area of Interest (AOI)
- Area of Interest (AOI)

Soils
- Soil Map Unit Polygons
- Soil Map Unit Lines
- Soil Map Unit Points

Special Point Features
- Blowout
- Borrow Pit
- Clay Spot
- Closed Depression
- Gravel Pit
- Gravelly Spot
- Landfill
- Lava Flow
- Marsh or swamp
- Mine or Quarry
- Miscellaneous Water
- Perennial Water
- Rock Outcrop
- Saline Spot
- Sandy Spot
- Severely Eroded Spot
- Sinkhole
- Slide or Slip
- Sodic Spot
- Spoil Area
- Stony Spot
- Very Stony Spot
- Wet Spot
- Other
- Special Line Features

Water Features
- Streams and Canals

Transportation
- Rails
- Interstate Highways
- US Routes
- Major Roads
- Local Roads

Background
- Aerial Photography

MAP INFORMATION

The soil surveys that comprise your AOI were mapped at 1:20,000.

Warning: Soil Map may not be valid at this scale.

Enlargement of maps beyond the scale of mapping can cause misunderstanding of the detail of mapping and accuracy of soil line placement. The maps do not show the small areas of contrasting soils that could have been shown at a more detailed scale.

Please rely on the bar scale on each map sheet for map measurements.

Source of Map: Natural Resources Conservation Service
Web Soil Survey URL:
Coordinate System: Web Mercator (EPSG:3857)

Maps from the Web Soil Survey are based on the Web Mercator projection, which preserves direction and shape but distorts distance and area. A projection that preserves area, such as the Albers equal-area conic projection, should be used if more accurate calculations of distance or area are required.

This product is generated from the USDA-NRCS certified data as of the version date(s) listed below.

Soil Survey Area: York County, Maine
Survey Area Data: Version 21, Aug 30, 2022

Soil map units are labeled (as space allows) for map scales 1:50,000 or larger.

Date(s) aerial images were photographed: Jun 19, 2020—Sep 20, 2020

The orthophoto or other base map on which the soil lines were compiled and digitized probably differs from the background imagery displayed on these maps. As a result, some minor shifting of map unit boundaries may be evident.

Map Unit Legend

Map Unit Symbol	Map Unit Name	Acres in AOI	Percent of AOI
Ba	Beaches, sand	0.3	5.5%
LyC	Lyman-Rock outcrop complex, 8 to 15 percent slopes	1.7	27.7%
LyE	Lyman-Rock outcrop complex, 15 to 80 percent slopes	3.3	54.8%
UH	Urban land-Hooksan complex, 0 to 8 percent slopes	0.2	3.1%
W	Water bodies	0.5	8.9%
Totals for Area of Interest		**6.1**	**100.0%**

Map Unit Descriptions

The map units delineated on the detailed soil maps in a soil survey represent the soils or miscellaneous areas in the survey area. The map unit descriptions, along with the maps, can be used to determine the composition and properties of a unit.

A map unit delineation on a soil map represents an area dominated by one or more major kinds of soil or miscellaneous areas. A map unit is identified and named according to the taxonomic classification of the dominant soils. Within a taxonomic class there are precisely defined limits for the properties of the soils. On the landscape, however, the soils are natural phenomena, and they have the characteristic variability of all natural phenomena. Thus, the range of some observed properties may extend beyond the limits defined for a taxonomic class. Areas of soils of a single taxonomic class rarely, if ever, can be mapped without including areas of other taxonomic classes. Consequently, every map unit is made up of the soils or miscellaneous areas for which it is named and some minor components that belong to taxonomic classes other than those of the major soils.

Most minor soils have properties similar to those of the dominant soil or soils in the map unit, and thus they do not affect use and management. These are called noncontrasting, or similar, components. They may or may not be mentioned in a particular map unit description. Other minor components, however, have properties and behavioral characteristics divergent enough to affect use or to require different management. These are called contrasting, or dissimilar, components. They generally are in small areas and could not be mapped separately because of the scale used. Some small areas of strongly contrasting soils or miscellaneous areas are identified by a special symbol on the maps. If included in the database for a given area, the contrasting minor components are identified in the map unit descriptions along with some characteristics of each. A few areas of minor components may not have been observed, and consequently they are not mentioned in the descriptions, especially where the pattern was so complex that it was impractical to make enough observations to identify all the soils and miscellaneous areas on the landscape.

The presence of minor components in a map unit in no way diminishes the usefulness or accuracy of the data. The objective of mapping is not to delineate pure taxonomic classes but rather to separate the landscape into landforms or landform segments that have similar use and management requirements. The delineation of such segments on the map provides sufficient information for the development of resource plans. If intensive use of small areas is planned, however, onsite investigation is needed to define and locate the soils and miscellaneous areas.

An identifying symbol precedes the map unit name in the map unit descriptions. Each description includes general facts about the unit and gives important soil properties and qualities.

Soils that have profiles that are almost alike make up a *soil series*. Except for differences in texture of the surface layer, all the soils of a series have major horizons that are similar in composition, thickness, and arrangement.

Soils of one series can differ in texture of the surface layer, slope, stoniness, salinity, degree of erosion, and other characteristics that affect their use. On the basis of such differences, a soil series is divided into *soil phases*. Most of the areas shown on the detailed soil maps are phases of soil series. The name of a soil phase commonly indicates a feature that affects use or management. For example, Alpha silt loam, 0 to 2 percent slopes, is a phase of the Alpha series.

Some map units are made up of two or more major soils or miscellaneous areas. These map units are complexes, associations, or undifferentiated groups.

A *complex* consists of two or more soils or miscellaneous areas in such an intricate pattern or in such small areas that they cannot be shown separately on the maps. The pattern and proportion of the soils or miscellaneous areas are somewhat similar in all areas. Alpha-Beta complex, 0 to 6 percent slopes, is an example.

An *association* is made up of two or more geographically associated soils or miscellaneous areas that are shown as one unit on the maps. Because of present or anticipated uses of the map units in the survey area, it was not considered practical or necessary to map the soils or miscellaneous areas separately. The pattern and relative proportion of the soils or miscellaneous areas are somewhat similar. Alpha-Beta association, 0 to 2 percent slopes, is an example.

An *undifferentiated group* is made up of two or more soils or miscellaneous areas that could be mapped individually but are mapped as one unit because similar interpretations can be made for use and management. The pattern and proportion of the soils or miscellaneous areas in a mapped area are not uniform. An area can be made up of only one of the major soils or miscellaneous areas, or it can be made up of all of them. Alpha and Beta soils, 0 to 2 percent slopes, is an example.

Some surveys include *miscellaneous areas*. Such areas have little or no soil material and support little or no vegetation. Rock outcrop is an example.

York County, Maine

Ba—Beaches, sand

Map Unit Setting

National map unit symbol: 2y080
Elevation: 0 to 20 feet
Mean annual precipitation: 36 to 71 inches
Mean annual air temperature: 39 to 55 degrees F
Frost-free period: 145 to 240 days
Farmland classification: Not prime farmland

Map Unit Composition

Beaches, sandy surface: 90 percent
Estimates are based on observations, descriptions, and transects of the mapunit.

Description of Beaches, Sandy Surface

Setting

Landform: Back-barrier beaches, barrier beaches, beaches, shores
Landform position (two-dimensional): Footslope
Landform position (three-dimensional): Riser
Down-slope shape: Convex
Across-slope shape: Linear
Parent material: Beach sand

Typical profile

C1 - 0 to 10 inches: sand

Properties and qualities

Slope: 0 to 8 percent
Runoff class: Negligible
Capacity of the most limiting layer to transmit water (Ksat): Moderately high to very high (1.42 to 99.90 in/hr)
Depth to water table: About 0 to 12 inches
Frequency of flooding: Very frequent
Maximum salinity: Moderately saline to strongly saline (8.0 to 16.0 mmhos/cm)
Available water supply, 0 to 60 inches: Very low (about 0.5 inches)

Interpretive groups

Land capability classification (irrigated): None specified
Land capability classification (nonirrigated): 8
Hydric soil rating: Unranked

LyC—Lyman-Rock outcrop complex, 8 to 15 percent slopes

Map Unit Setting

National map unit symbol: 2trqj
Elevation: 0 to 790 feet
Mean annual precipitation: 36 to 65 inches
Mean annual air temperature: 36 to 52 degrees F

Frost-free period: 60 to 160 days
Farmland classification: Not prime farmland

Map Unit Composition

Lyman, very stony, and similar soils: 62 percent
Rock outcrop: 25 percent
Estimates are based on observations, descriptions, and transects of the mapunit.

Description of Lyman, Very Stony

Setting

Landform: Hills, mountains
Landform position (two-dimensional): Summit, shoulder, backslope
Landform position (three-dimensional): Mountaintop, mountainbase, side slope, crest
Down-slope shape: Convex
Across-slope shape: Convex
Parent material: Loamy supraglacial till derived from granite and gneiss and/or loamy supraglacial till derived from phyllite and/or loamy supraglacial till derived from mica schist

Typical profile

Oe - 0 to 1 inches: moderately decomposed plant material
A - 1 to 3 inches: loam
E - 3 to 5 inches: fine sandy loam
Bhs - 5 to 7 inches: loam
Bs1 - 7 to 11 inches: loam
Bs2 - 11 to 18 inches: channery loam
R - 18 to 28 inches: bedrock

Properties and qualities

Slope: 8 to 15 percent
Surface area covered with cobbles, stones or boulders: 1.5 percent
Depth to restrictive feature: 11 to 24 inches to lithic bedrock
Drainage class: Somewhat excessively drained
Capacity of the most limiting layer to transmit water (Ksat): Very low to high (0.00 to 14.03 in/hr)
Depth to water table: More than 80 inches
Frequency of flooding: None
Frequency of ponding: None
Available water supply, 0 to 60 inches: Low (about 3.4 inches)

Interpretive groups

Land capability classification (irrigated): None specified
Land capability classification (nonirrigated): 6s
Hydrologic Soil Group: D
Ecological site: F144BY701ME - Shallow Till
Hydric soil rating: No

Description of Rock Outcrop

Setting

Landform: Hills, mountains
Landform position (two-dimensional): Summit, shoulder, backslope
Landform position (three-dimensional): Mountaintop, mountainbase, side slope, crest
Down-slope shape: Convex

Across-slope shape: Convex
Parent material: Igneous and metamorphic rock

Typical profile
R - 0 to 10 inches: bedrock

Properties and qualities
Slope: 8 to 15 percent
Depth to restrictive feature: 0 inches to lithic bedrock
Capacity of the most limiting layer to transmit water (Ksat): Very low to very high (0.00 to 14.17 in/hr)

Interpretive groups
Land capability classification (irrigated): None specified
Land capability classification (nonirrigated): 8s
Ecological site: F144BY801ME - Rockland (reserved)
Hydric soil rating: Unranked

LyE—Lyman-Rock outcrop complex, 15 to 80 percent slopes

Map Unit Setting
National map unit symbol: 2trqp
Elevation: 0 to 980 feet
Mean annual precipitation: 36 to 65 inches
Mean annual air temperature: 36 to 52 degrees F
Frost-free period: 60 to 160 days
Farmland classification: Not prime farmland

Map Unit Composition
Lyman, very stony, and similar soils: 60 percent
Rock outcrop: 30 percent
Estimates are based on observations, descriptions, and transects of the mapunit.

Description of Lyman, Very Stony

Setting
Landform: Hills, mountains
Landform position (two-dimensional): Summit, shoulder, backslope
Landform position (three-dimensional): Mountaintop, mountainflank, side slope, crest
Down-slope shape: Convex
Across-slope shape: Convex
Parent material: Loamy supraglacial till derived from granite and gneiss and/or loamy supraglacial till derived from phyllite and/or loamy supraglacial till derived from mica schist

Typical profile
Oe - 0 to 1 inches: moderately decomposed plant material
A - 1 to 3 inches: loam
E - 3 to 5 inches: fine sandy loam
Bhs - 5 to 7 inches: loam

Bs1 - 7 to 11 inches: loam
Bs2 - 11 to 18 inches: channery loam
R - 18 to 28 inches: bedrock

Properties and qualities

Slope: 15 to 80 percent
Surface area covered with cobbles, stones or boulders: 1.5 percent
Depth to restrictive feature: 11 to 24 inches to lithic bedrock
Drainage class: Somewhat excessively drained
Capacity of the most limiting layer to transmit water (Ksat): Very low to high (0.00 to 14.03 in/hr)
Depth to water table: More than 80 inches
Frequency of flooding: None
Frequency of ponding: None
Available water supply, 0 to 60 inches: Low (about 3.4 inches)

Interpretive groups

Land capability classification (irrigated): None specified
Land capability classification (nonirrigated): 7s
Hydrologic Soil Group: D
Ecological site: F144BY701ME - Shallow Till
Hydric soil rating: No

Description of Rock Outcrop

Setting

Landform: Hills, mountains
Landform position (two-dimensional): Summit, shoulder, backslope
Landform position (three-dimensional): Mountaintop, mountainflank, side slope, crest, free face
Down-slope shape: Convex
Across-slope shape: Convex
Parent material: Igneous and metamorphic rock

Typical profile

R - 0 to 10 inches: bedrock

Properties and qualities

Slope: 15 to 80 percent
Depth to restrictive feature: 0 inches to lithic bedrock
Capacity of the most limiting layer to transmit water (Ksat): Very low to very high (0.00 to 14.17 in/hr)

Interpretive groups

Land capability classification (irrigated): None specified
Land capability classification (nonirrigated): 8s
Ecological site: F144BY801ME - Rockland (reserved)
Hydric soil rating: Unranked

UH—Urban land-Hooksan complex, 0 to 8 percent slopes

Map Unit Setting

National map unit symbol: 2x1l1
Elevation: 0 to 50 feet
Mean annual precipitation: 36 to 71 inches
Mean annual air temperature: 39 to 55 degrees F
Frost-free period: 140 to 240 days
Farmland classification: Not prime farmland

Map Unit Composition

Urban land, coastal: 50 percent
Hooksan and similar soils: 30 percent
Estimates are based on observations, descriptions, and transects of the mapunit.

Description of Urban Land, Coastal

Setting

Landform: Dunes
Down-slope shape: Linear
Across-slope shape: Linear

Typical profile

M - 0 to 10 inches: cemented material

Properties and qualities

Slope: 0 to 8 percent
Depth to restrictive feature: 0 inches to manufactured layer
Runoff class: Very high
Capacity of the most limiting layer to transmit water (Ksat): Very low (0.00 to 0.00 in/hr)
Frequency of flooding: Rare
Available water supply, 0 to 60 inches: Very low (about 0.0 inches)

Interpretive groups

Land capability classification (irrigated): None specified
Land capability classification (nonirrigated): 8
Hydrologic Soil Group: D
Hydric soil rating: Unranked

Description of Hooksan

Setting

Landform: Dunes
Landform position (two-dimensional): Summit, shoulder, backslope, footslope
Landform position (three-dimensional): Side slope, base slope, crest
Down-slope shape: Convex
Across-slope shape: Convex, linear
Parent material: Sandy eolian deposits

Typical profile

C1 - 0 to 20 inches: sand
C2 - 20 to 30 inches: sand
C3 - 30 to 64 inches: sand

Properties and qualities

Slope: 0 to 8 percent
Depth to restrictive feature: More than 80 inches
Drainage class: Excessively drained
Runoff class: Negligible
Capacity of the most limiting layer to transmit water (Ksat): Very high (14.17 to 99.90 in/hr)
Depth to water table: More than 80 inches
Frequency of flooding: Rare
Frequency of ponding: None
Maximum salinity: Nonsaline (0.0 to 1.9 mmhos/cm)
Available water supply, 0 to 60 inches: Low (about 5.4 inches)

Interpretive groups

Land capability classification (irrigated): None specified
Land capability classification (nonirrigated): 7e
Hydrologic Soil Group: A
Ecological site: R149BY002MA - Coastal Dunes
Hydric soil rating: No

W—Water bodies

Map Unit Composition

Water: 100 percent
Estimates are based on observations, descriptions, and transects of the mapunit.

Description of Water

Setting

Landform: Hills

Appendix B

Pre Development HydroCAD Calculations

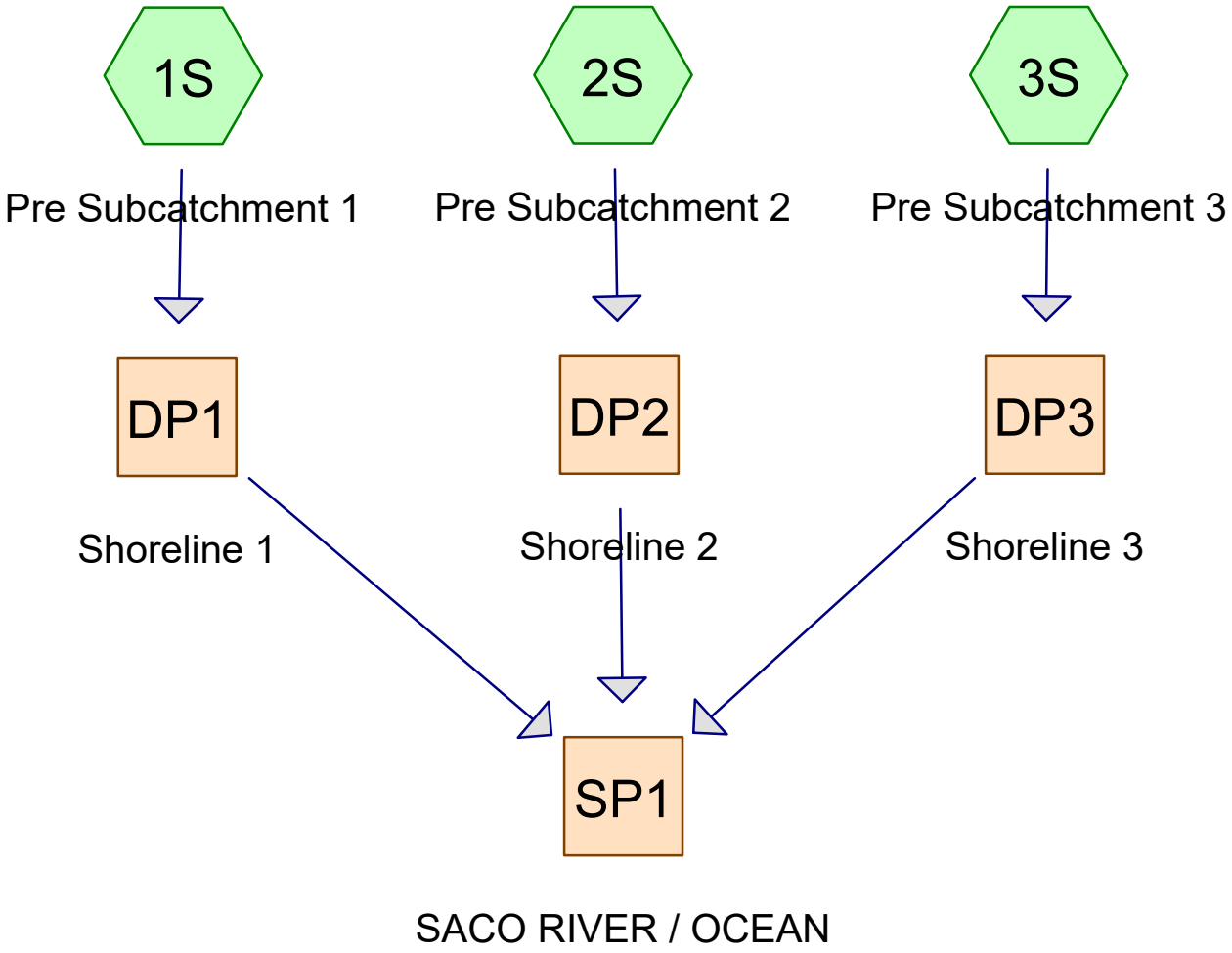

Subcat Reach Pond Link

Routing Diagram for UNE-PreDrainage
Prepared by GEI Consultants, Printed 7/9/2024
HydroCAD® 10.20-3c s/n 01250 © 2023 HydroCAD Software Solutions LLC

Project Notes

Defined 3 rainfall events from ME-York IDF

Rainfall Events Listing

Event#	Event Name	Storm Type	Curve	Mode	Duration (hours)	B/B	Depth (inches)	AMC
1	2-yr	Type III 24-hr		Default	24.00	1	3.30	2
2	10-yr	Type III 24-hr		Default	24.00	1	4.90	2
3	25-yr	Type III 24-hr		Default	24.00	1	6.20	2
4	100-yr	Type III 24-hr		Default	24.00	1	8.70	2

Area Listing (all nodes)

Area (acres)	CN	Description (subcatchment-numbers)
0.110	96	Gravel surface, HSG D (3S)
0.017	98	Roofs, HSG D (3S)
0.160	88	Sand Beach, HSG D (3S)
2.270	77	Woods, Good, HSG D (1S, 2S, 3S)
2.557	**79**	**TOTAL AREA**

Soil Listing (all nodes)

Area (acres)	Soil Group	Subcatchment Numbers
0.000	HSG A	
0.000	HSG B	
0.000	HSG C	
2.557	HSG D	1S, 2S, 3S
0.000	Other	
2.557		**TOTAL AREA**

Ground Covers (all nodes)

HSG-A (acres)	HSG-B (acres)	HSG-C (acres)	HSG-D (acres)	Other (acres)	Total (acres)	Ground Cover	Subcatchment Numbers
0.000	0.000	0.000	0.110	0.000	0.110	Gravel surface	3S
0.000	0.000	0.000	0.017	0.000	0.017	Roofs	3S
0.000	0.000	0.000	0.160	0.000	0.160	Sand Beach	3S
0.000	0.000	0.000	2.270	0.000	2.270	Woods, Good	1S, 2S, 3S
0.000	**0.000**	**0.000**	**2.557**	**0.000**	**2.557**	**TOTAL AREA**	

Time span=5.00-20.00 hrs, dt=0.05 hrs, 301 points
Runoff by SCS TR-20 method, UH=SCS, Weighted-CN
Reach routing by Stor-Ind+Trans method - Pond routing by Stor-Ind method

Subcatchment 1S: Pre Subcatchment 1 Runoff Area=20,023 sf 0.00% Impervious Runoff Depth>1.18"
Flow Length=138' Tc=4.0 min CN=77 Runoff=0.71 cfs 0.045 af

Subcatchment 2S: Pre Subcatchment 2 Runoff Area=27,744 sf 0.00% Impervious Runoff Depth>1.18"
Flow Length=198' Tc=12.7 min CN=77 Runoff=0.74 cfs 0.062 af

Subcatchment 3S: Pre Subcatchment 3 Runoff Area=63,622 sf 1.18% Impervious Runoff Depth>1.37"
Flow Length=445' Tc=7.0 min CN=80 Runoff=2.39 cfs 0.166 af

Reach DP1: Shoreline 1 Inflow=0.71 cfs 0.045 af
Outflow=0.71 cfs 0.045 af

Reach DP2: Shoreline 2 Inflow=0.74 cfs 0.062 af
Outflow=0.74 cfs 0.062 af

Reach DP3: Shoreline 3 Inflow=2.39 cfs 0.166 af
Outflow=2.39 cfs 0.166 af

Reach SP1: SACO RIVER / OCEAN Inflow=3.63 cfs 0.274 af
Outflow=3.63 cfs 0.274 af

Total Runoff Area = 2.557 ac Runoff Volume = 0.274 af Average Runoff Depth = 1.29"
99.33% Pervious = 2.540 ac 0.67% Impervious = 0.017 ac

Summary for Subcatchment 1S: Pre Subcatchment 1

Runoff = 0.71 cfs @ 12.07 hrs, Volume= 0.045 af, Depth> 1.18"
Routed to Reach DP1 : Shoreline 1

Runoff by SCS TR-20 method, UH=SCS, Weighted-CN, Time Span= 5.00-20.00 hrs, dt= 0.05 hrs
Type III 24-hr 2-yr Rainfall=3.30"

Area (sf)	CN	Description
20,023	77	Woods, Good, HSG D
20,023		100.00% Pervious Area

Tc (min)	Length (feet)	Slope (ft/ft)	Velocity (ft/sec)	Capacity (cfs)	Description
3.1	20	0.1000	0.11		**Sheet Flow, Tc-1** Woods: Light underbrush n= 0.400 P2= 3.30"
0.9	118	0.1780	2.11		**Shallow Concentrated Flow, Tc-2** Woodland Kv= 5.0 fps
4.0	138	Total			

Subcatchment 1S: Pre Subcatchment 1

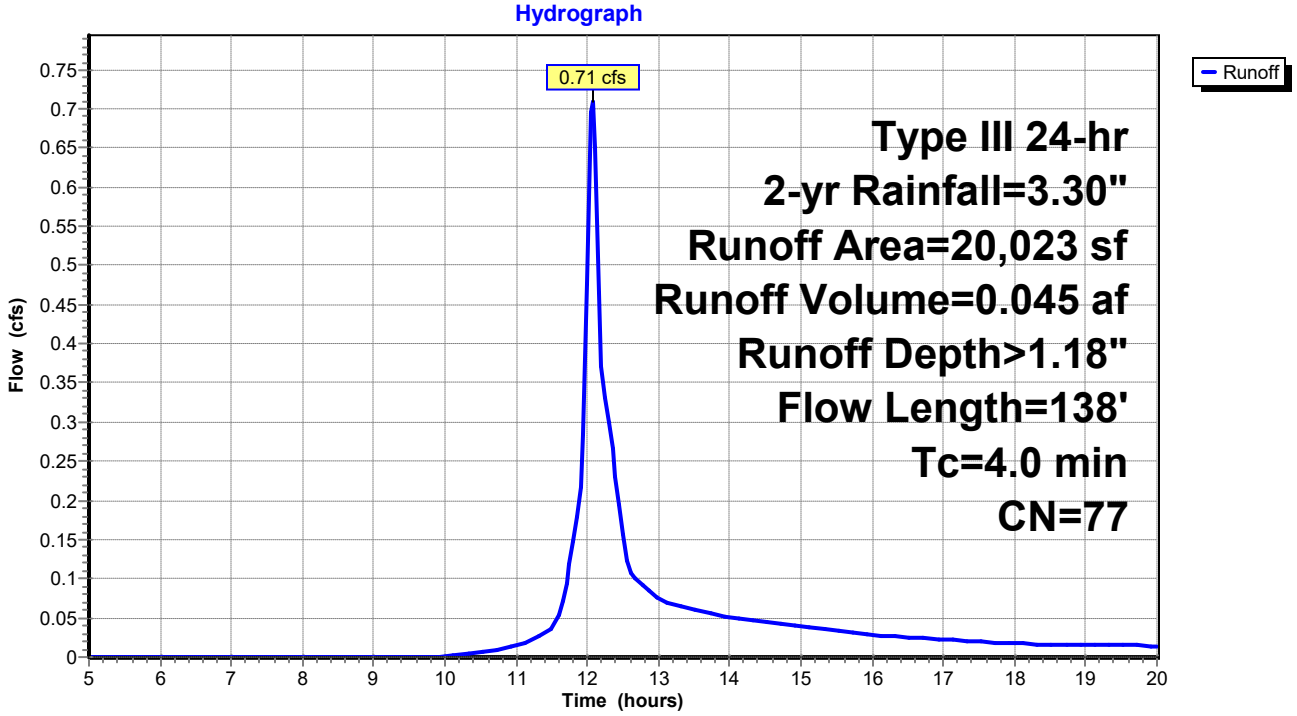

Summary for Subcatchment 2S: Pre Subcatchment 2

Runoff = 0.74 cfs @ 12.19 hrs, Volume= 0.062 af, Depth> 1.18"
Routed to Reach DP2 : Shoreline 2

Runoff by SCS TR-20 method, UH=SCS, Weighted-CN, Time Span= 5.00-20.00 hrs, dt= 0.05 hrs
Type III 24-hr 2-yr Rainfall=3.30"

Area (sf)	CN	Description
27,744	77	Woods, Good, HSG D
27,744		100.00% Pervious Area

Tc (min)	Length (feet)	Slope (ft/ft)	Velocity (ft/sec)	Capacity (cfs)	Description
12.3	148	0.1689	0.20		**Sheet Flow, Tc-1** Woods: Light underbrush n= 0.400 P2= 3.30"
0.4	50	0.1800	2.12		**Shallow Concentrated Flow, Tc-2** Woodland Kv= 5.0 fps
12.7	198	Total			

Subcatchment 2S: Pre Subcatchment 2

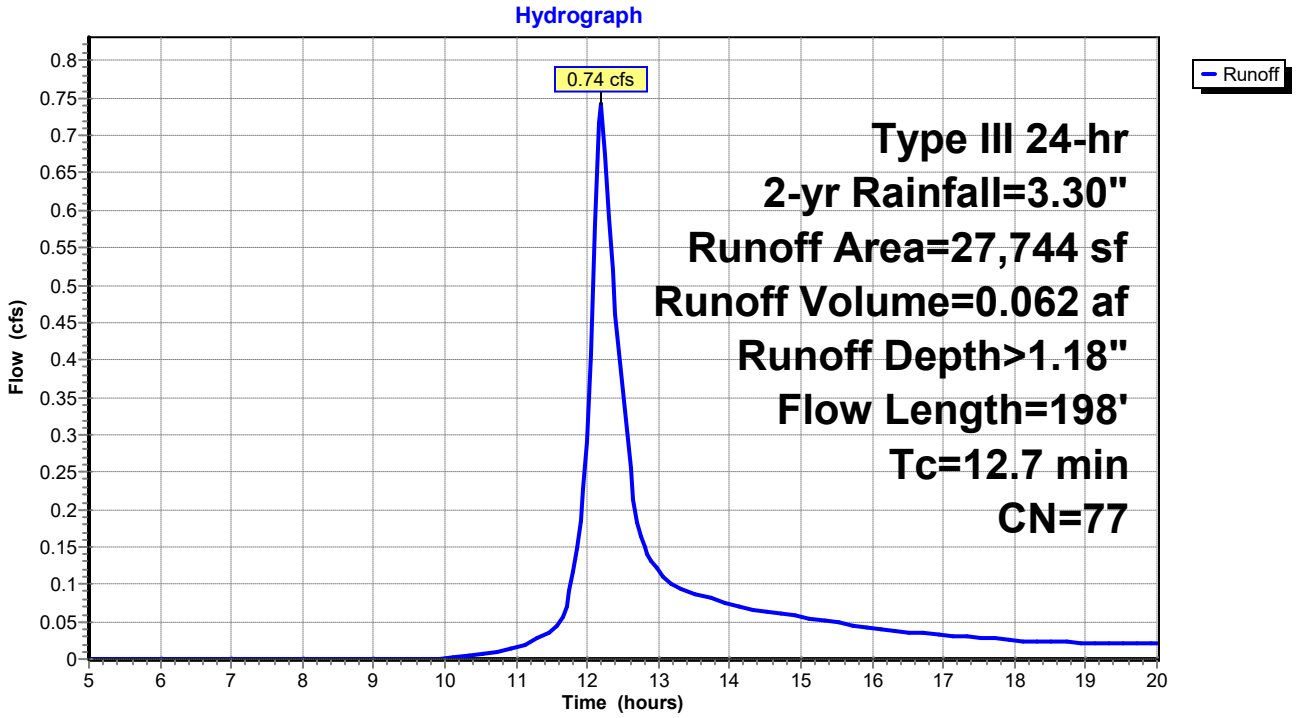

Summary for Subcatchment 3S: Pre Subcatchment 3

Runoff = 2.39 cfs @ 12.11 hrs, Volume= 0.166 af, Depth> 1.37"
Routed to Reach DP3 : Shoreline 3

Runoff by SCS TR-20 method, UH=SCS, Weighted-CN, Time Span= 5.00-20.00 hrs, dt= 0.05 hrs
Type III 24-hr 2-yr Rainfall=3.30"

	Area (sf)	CN	Description
	51,121	77	Woods, Good, HSG D
	751	98	Roofs, HSG D
	4,795	96	Gravel surface, HSG D
*	6,955	88	Sand Beach, HSG D
	63,622	80	Weighted Average
	62,871		98.82% Pervious Area
	751		1.18% Impervious Area

Tc (min)	Length (feet)	Slope (ft/ft)	Velocity (ft/sec)	Capacity (cfs)	Description
2.7	23	0.1740	0.14		**Sheet Flow, Tc-1** Woods: Light underbrush n= 0.400 P2= 3.30"
1.0	70	0.0571	1.19		**Shallow Concentrated Flow, Tc-2** Woodland Kv= 5.0 fps
0.5	170	0.1059	5.24		**Shallow Concentrated Flow, Tc-3** Unpaved Kv= 16.1 fps
2.5	140	0.0357	0.94		**Shallow Concentrated Flow, Tc-4** Woodland Kv= 5.0 fps
0.3	42	0.0714	2.67		**Shallow Concentrated Flow, Tc-4** Nearly Bare & Untilled Kv= 10.0 fps
7.0	445	Total			

Subcatchment 3S: Pre Subcatchment 3

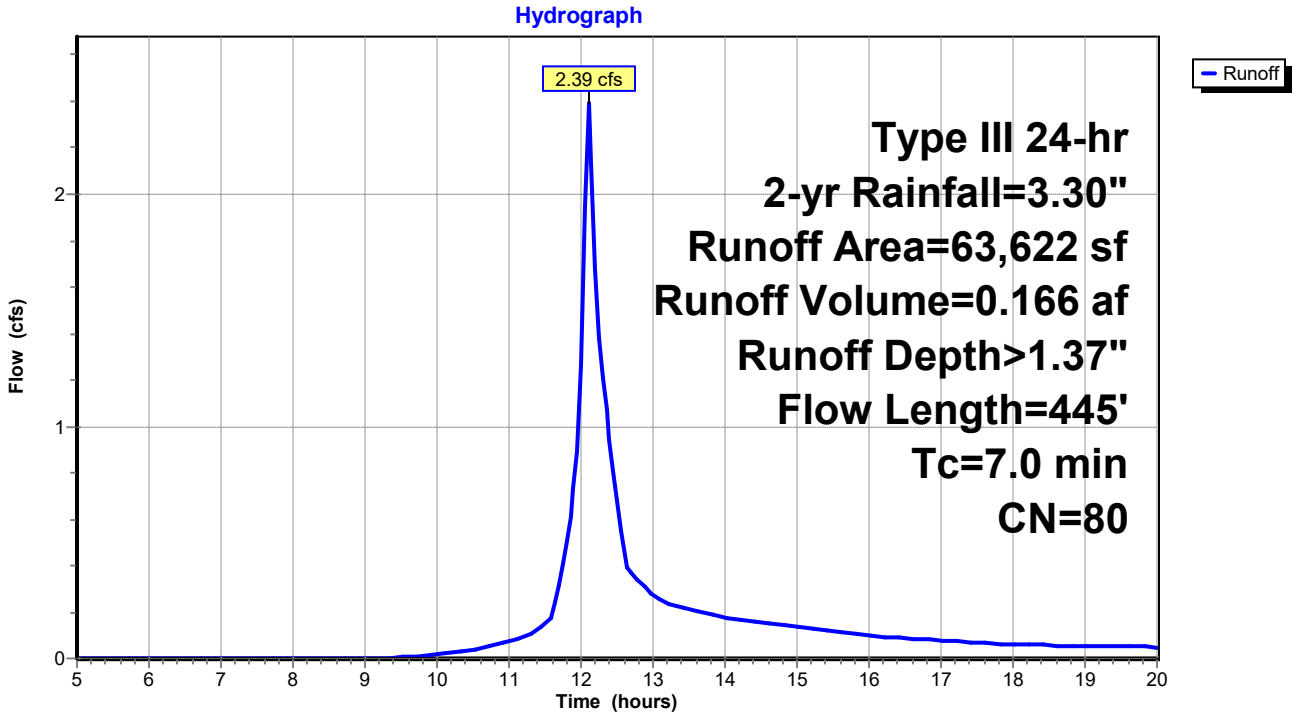

Summary for Reach DP1: Shoreline 1

Inflow Area = 0.460 ac, 0.00% Impervious, Inflow Depth > 1.18" for 2-yr event
Inflow = 0.71 cfs @ 12.07 hrs, Volume= 0.045 af
Outflow = 0.71 cfs @ 12.07 hrs, Volume= 0.045 af, Atten= 0%, Lag= 0.0 min
Routed to Reach SP1 : SACO RIVER / OCEAN

Routing by Stor-Ind+Trans method, Time Span= 5.00-20.00 hrs, dt= 0.05 hrs

Reach DP1: Shoreline 1

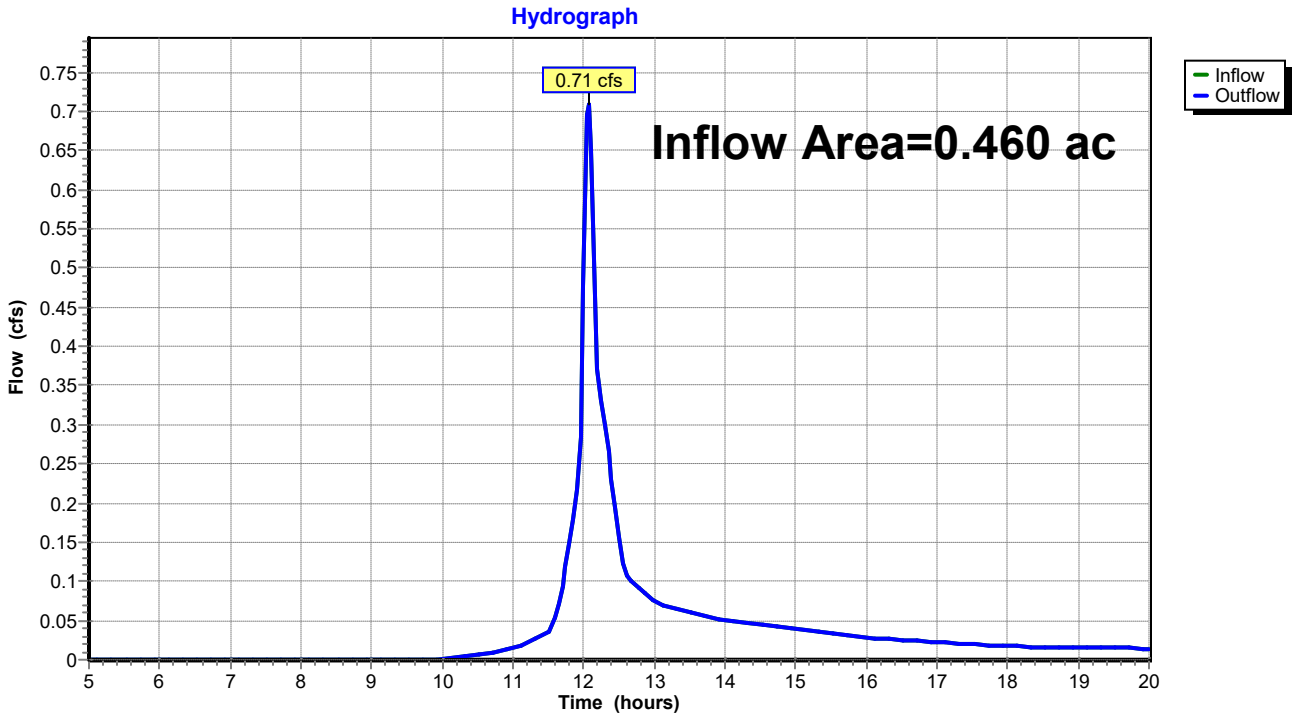

Summary for Reach DP2: Shoreline 2

Inflow Area = 0.637 ac, 0.00% Impervious, Inflow Depth > 1.18" for 2-yr event
Inflow = 0.74 cfs @ 12.19 hrs, Volume= 0.062 af
Outflow = 0.74 cfs @ 12.19 hrs, Volume= 0.062 af, Atten= 0%, Lag= 0.0 min
Routed to Reach SP1 : SACO RIVER / OCEAN

Routing by Stor-Ind+Trans method, Time Span= 5.00-20.00 hrs, dt= 0.05 hrs

Reach DP2: Shoreline 2

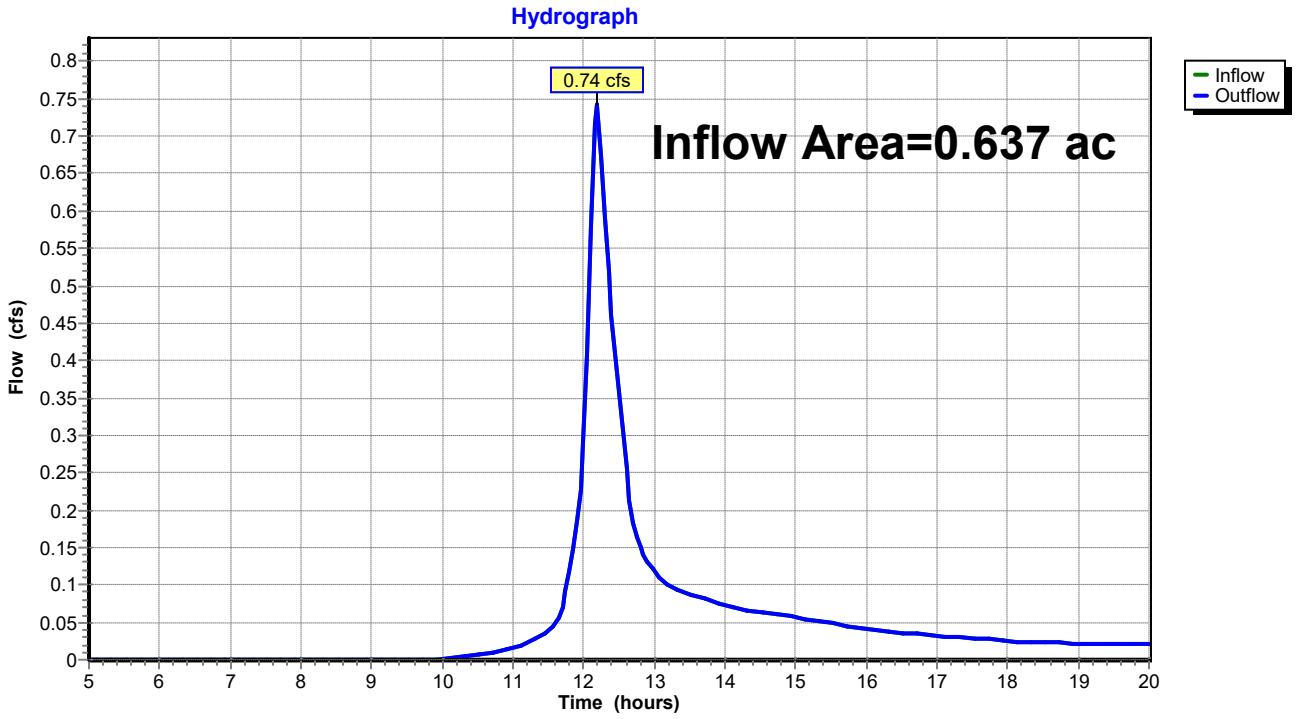

Summary for Reach DP3: Shoreline 3

Inflow Area = 1.461 ac, 1.18% Impervious, Inflow Depth > 1.37" for 2-yr event
Inflow = 2.39 cfs @ 12.11 hrs, Volume= 0.166 af
Outflow = 2.39 cfs @ 12.11 hrs, Volume= 0.166 af, Atten= 0%, Lag= 0.0 min
Routed to Reach SP1 : SACO RIVER / OCEAN

Routing by Stor-Ind+Trans method, Time Span= 5.00-20.00 hrs, dt= 0.05 hrs

Reach DP3: Shoreline 3

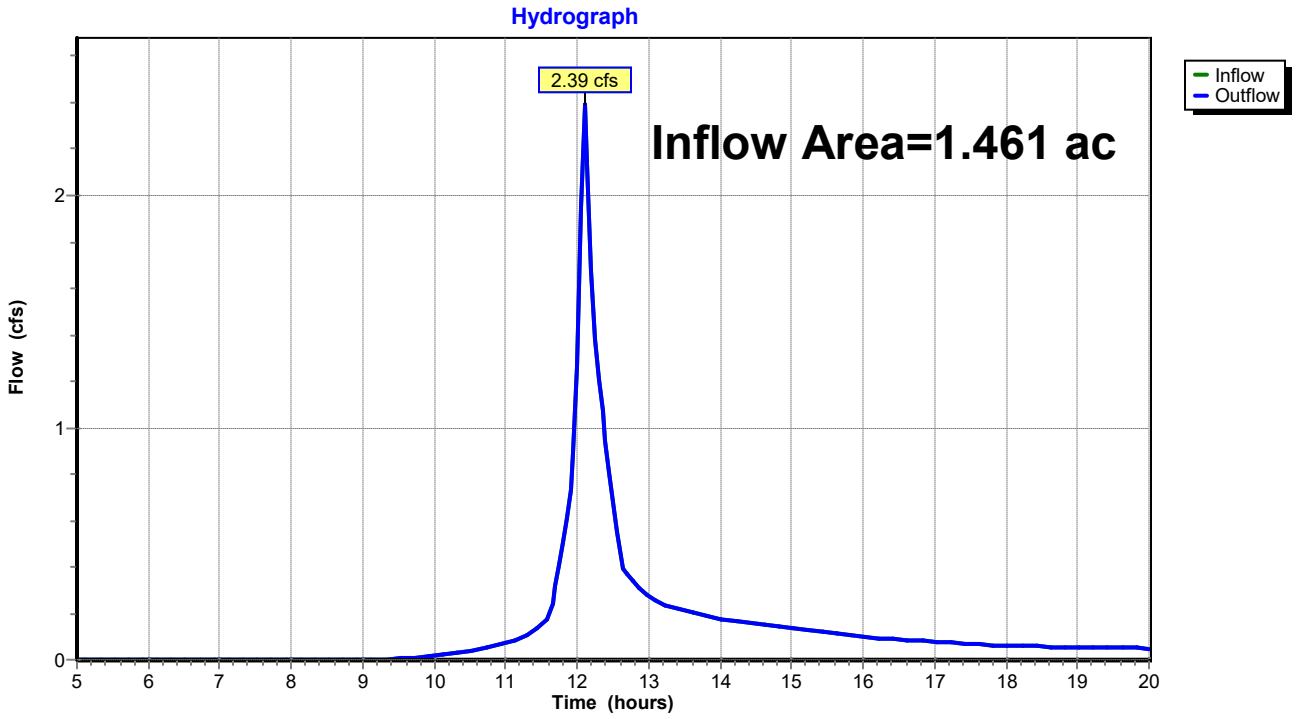

Summary for Reach SP1: SACO RIVER / OCEAN

Inflow Area = 2.557 ac, 0.67% Impervious, Inflow Depth > 1.29" for 2-yr event
Inflow = 3.63 cfs @ 12.11 hrs, Volume= 0.274 af
Outflow = 3.63 cfs @ 12.11 hrs, Volume= 0.274 af, Atten= 0%, Lag= 0.0 min

Routing by Stor-Ind+Trans method, Time Span= 5.00-20.00 hrs, dt= 0.05 hrs

Reach SP1: SACO RIVER / OCEAN

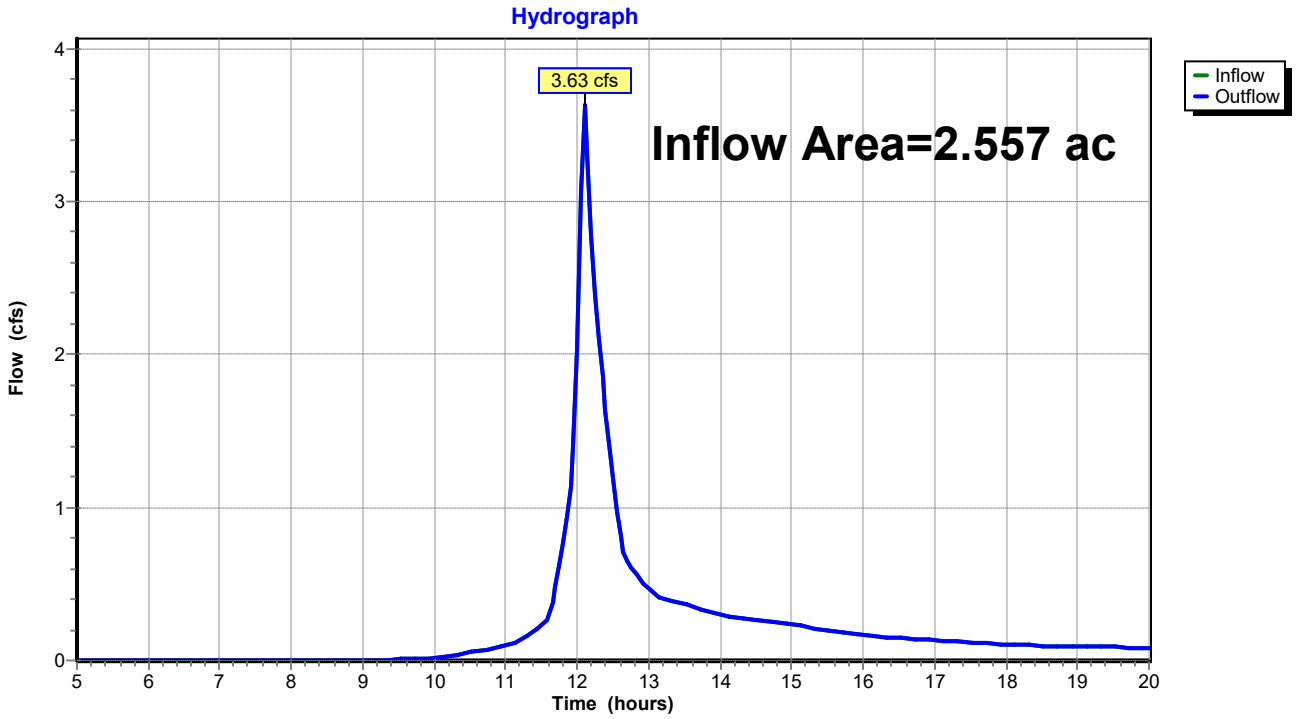

Time span=5.00-20.00 hrs, dt=0.05 hrs, 301 points
Runoff by SCS TR-20 method, UH=SCS, Weighted-CN
Reach routing by Stor-Ind+Trans method - Pond routing by Stor-Ind method

Subcatchment 1S: Pre Subcatchment 1 Runoff Area=20,023 sf 0.00% Impervious Runoff Depth>2.36"
Flow Length=138' Tc=4.0 min CN=77 Runoff=1.44 cfs 0.091 af

Subcatchment 2S: Pre Subcatchment 2 Runoff Area=27,744 sf 0.00% Impervious Runoff Depth>2.36"
Flow Length=198' Tc=12.7 min CN=77 Runoff=1.51 cfs 0.125 af

Subcatchment 3S: Pre Subcatchment 3 Runoff Area=63,622 sf 1.18% Impervious Runoff Depth>2.62"
Flow Length=445' Tc=7.0 min CN=80 Runoff=4.58 cfs 0.319 af

Reach DP1: Shoreline 1 Inflow=1.44 cfs 0.091 af
Outflow=1.44 cfs 0.091 af

Reach DP2: Shoreline 2 Inflow=1.51 cfs 0.125 af
Outflow=1.51 cfs 0.125 af

Reach DP3: Shoreline 3 Inflow=4.58 cfs 0.319 af
Outflow=4.58 cfs 0.319 af

Reach SP1: SACO RIVER / OCEAN Inflow=7.10 cfs 0.534 af
Outflow=7.10 cfs 0.534 af

Total Runoff Area = 2.557 ac Runoff Volume = 0.534 af Average Runoff Depth = 2.51"
99.33% Pervious = 2.540 ac 0.67% Impervious = 0.017 ac

Summary for Subcatchment 1S: Pre Subcatchment 1

Runoff = 1.44 cfs @ 12.06 hrs, Volume= 0.091 af, Depth> 2.36"
Routed to Reach DP1 : Shoreline 1

Runoff by SCS TR-20 method, UH=SCS, Weighted-CN, Time Span= 5.00-20.00 hrs, dt= 0.05 hrs
Type III 24-hr 10-yr Rainfall=4.90"

Area (sf)	CN	Description
20,023	77	Woods, Good, HSG D
20,023		100.00% Pervious Area

Tc (min)	Length (feet)	Slope (ft/ft)	Velocity (ft/sec)	Capacity (cfs)	Description
3.1	20	0.1000	0.11		**Sheet Flow, Tc-1** Woods: Light underbrush n= 0.400 P2= 3.30"
0.9	118	0.1780	2.11		**Shallow Concentrated Flow, Tc-2** Woodland Kv= 5.0 fps
4.0	138	Total			

Subcatchment 1S: Pre Subcatchment 1

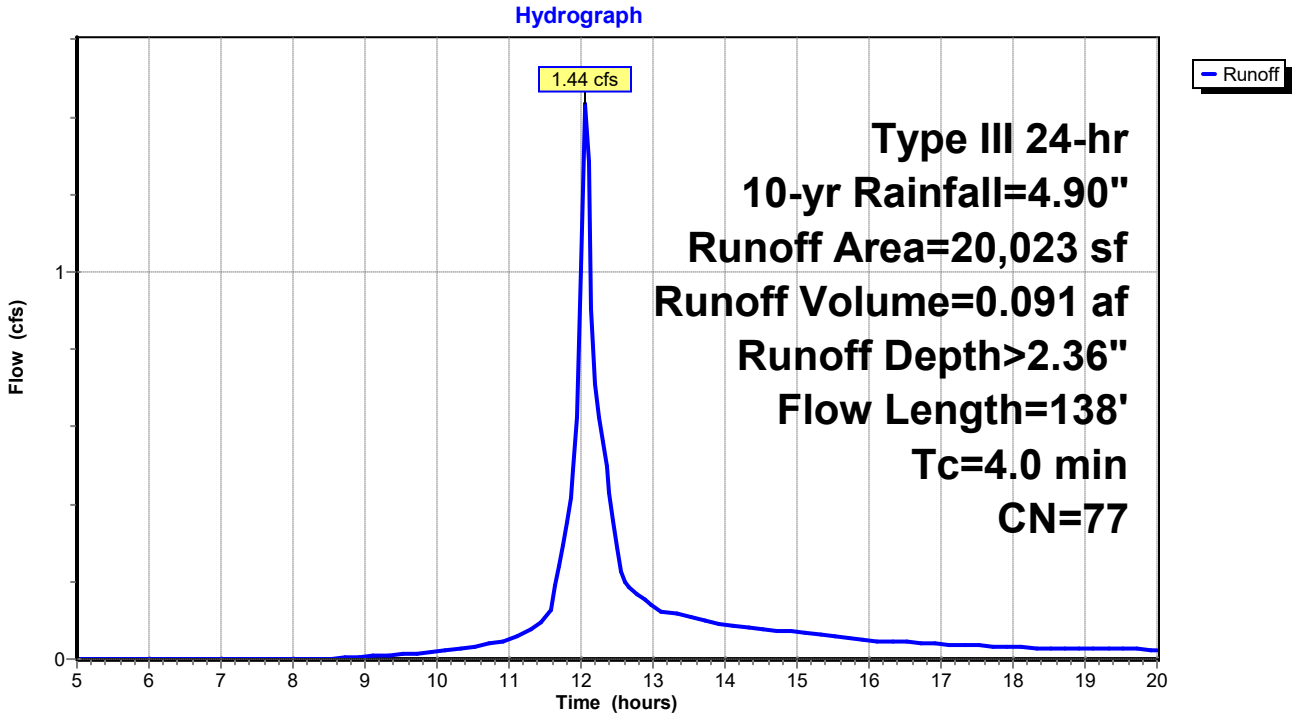

Summary for Subcatchment 2S: Pre Subcatchment 2

Runoff = 1.51 cfs @ 12.18 hrs, Volume= 0.125 af, Depth> 2.36"
Routed to Reach DP2 : Shoreline 2

Runoff by SCS TR-20 method, UH=SCS, Weighted-CN, Time Span= 5.00-20.00 hrs, dt= 0.05 hrs
Type III 24-hr 10-yr Rainfall=4.90"

Area (sf)	CN	Description
27,744	77	Woods, Good, HSG D
27,744		100.00% Pervious Area

Tc (min)	Length (feet)	Slope (ft/ft)	Velocity (ft/sec)	Capacity (cfs)	Description
12.3	148	0.1689	0.20		**Sheet Flow, Tc-1** Woods: Light underbrush n= 0.400 P2= 3.30"
0.4	50	0.1800	2.12		**Shallow Concentrated Flow, Tc-2** Woodland Kv= 5.0 fps
12.7	198	Total			

Subcatchment 2S: Pre Subcatchment 2

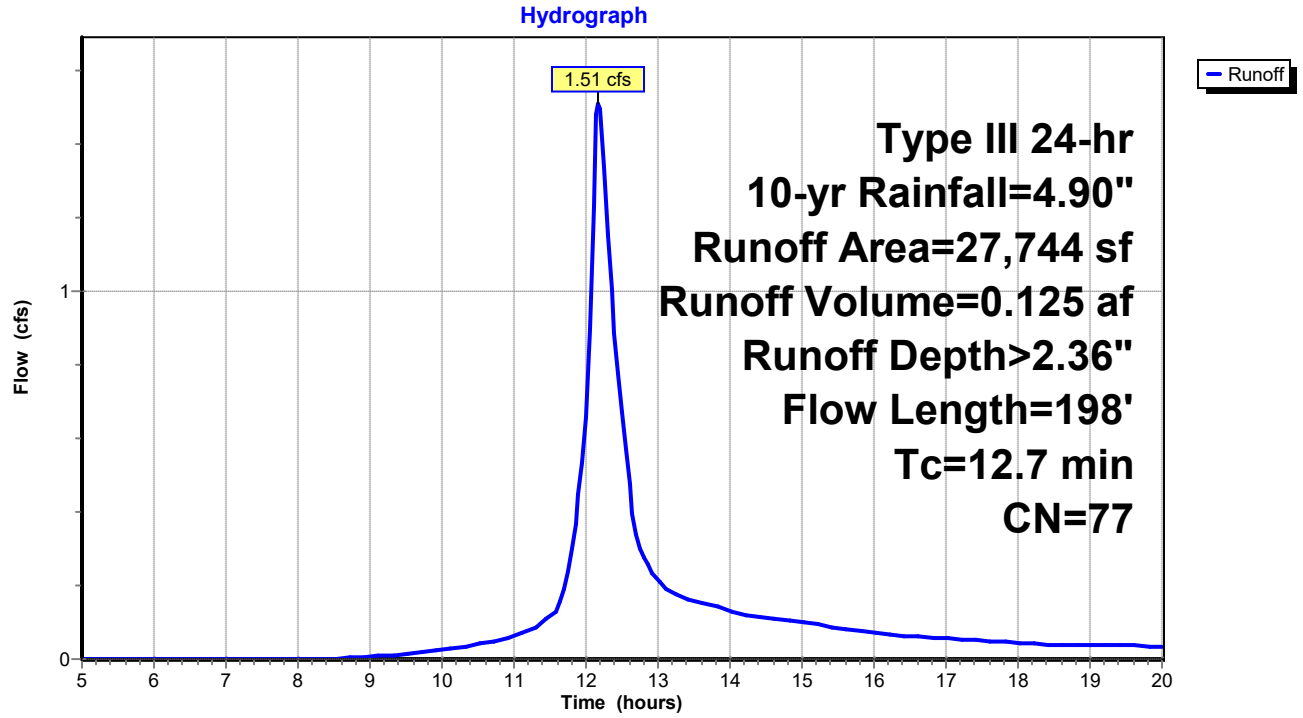

Summary for Subcatchment 3S: Pre Subcatchment 3

Runoff = 4.58 cfs @ 12.10 hrs, Volume= 0.319 af, Depth> 2.62"
Routed to Reach DP3 : Shoreline 3

Runoff by SCS TR-20 method, UH=SCS, Weighted-CN, Time Span= 5.00-20.00 hrs, dt= 0.05 hrs
Type III 24-hr 10-yr Rainfall=4.90"

	Area (sf)	CN	Description
	51,121	77	Woods, Good, HSG D
	751	98	Roofs, HSG D
	4,795	96	Gravel surface, HSG D
*	6,955	88	Sand Beach, HSG D
	63,622	80	Weighted Average
	62,871		98.82% Pervious Area
	751		1.18% Impervious Area

Tc (min)	Length (feet)	Slope (ft/ft)	Velocity (ft/sec)	Capacity (cfs)	Description
2.7	23	0.1740	0.14		**Sheet Flow, Tc-1** Woods: Light underbrush n= 0.400 P2= 3.30"
1.0	70	0.0571	1.19		**Shallow Concentrated Flow, Tc-2** Woodland Kv= 5.0 fps
0.5	170	0.1059	5.24		**Shallow Concentrated Flow, Tc-3** Unpaved Kv= 16.1 fps
2.5	140	0.0357	0.94		**Shallow Concentrated Flow, Tc-4** Woodland Kv= 5.0 fps
0.3	42	0.0714	2.67		**Shallow Concentrated Flow, Tc-4** Nearly Bare & Untilled Kv= 10.0 fps
7.0	445	Total			

Subcatchment 3S: Pre Subcatchment 3

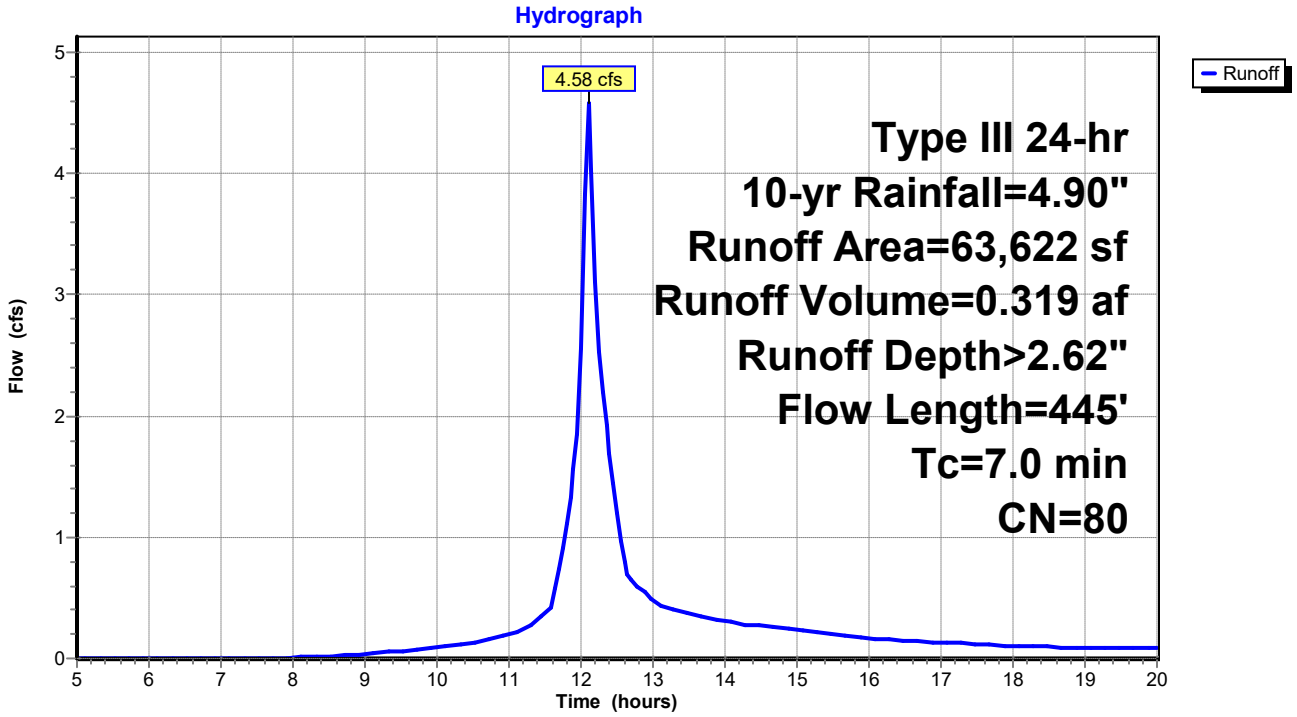

Summary for Reach DP1: Shoreline 1

Inflow Area = 0.460 ac, 0.00% Impervious, Inflow Depth > 2.36" for 10-yr event
Inflow = 1.44 cfs @ 12.06 hrs, Volume= 0.091 af
Outflow = 1.44 cfs @ 12.06 hrs, Volume= 0.091 af, Atten= 0%, Lag= 0.0 min
Routed to Reach SP1 : SACO RIVER / OCEAN

Routing by Stor-Ind+Trans method, Time Span= 5.00-20.00 hrs, dt= 0.05 hrs

Reach DP1: Shoreline 1

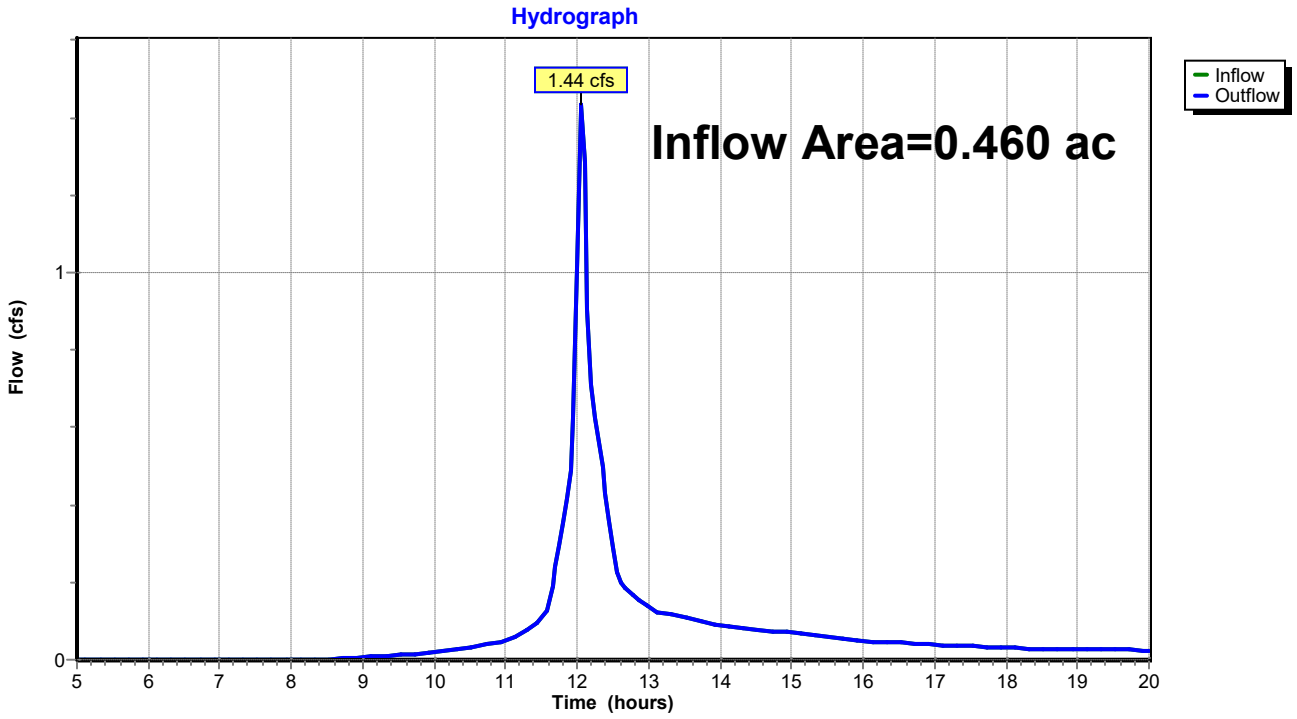

Summary for Reach DP2: Shoreline 2

Inflow Area = 0.637 ac, 0.00% Impervious, Inflow Depth > 2.36" for 10-yr event
Inflow = 1.51 cfs @ 12.18 hrs, Volume= 0.125 af
Outflow = 1.51 cfs @ 12.18 hrs, Volume= 0.125 af, Atten= 0%, Lag= 0.0 min
Routed to Reach SP1 : SACO RIVER / OCEAN

Routing by Stor-Ind+Trans method, Time Span= 5.00-20.00 hrs, dt= 0.05 hrs

Reach DP2: Shoreline 2

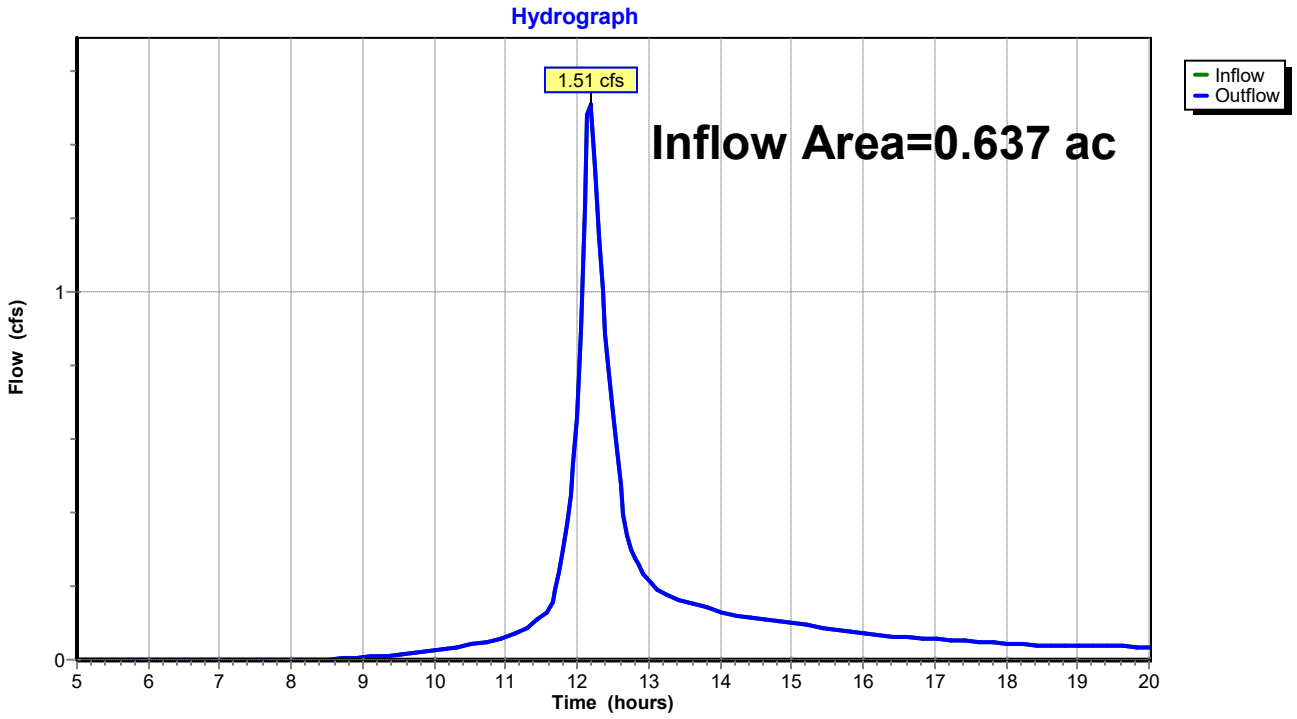

Summary for Reach DP3: Shoreline 3

Inflow Area = 1.461 ac, 1.18% Impervious, Inflow Depth > 2.62" for 10-yr event
Inflow = 4.58 cfs @ 12.10 hrs, Volume= 0.319 af
Outflow = 4.58 cfs @ 12.10 hrs, Volume= 0.319 af, Atten= 0%, Lag= 0.0 min
Routed to Reach SP1 : SACO RIVER / OCEAN

Routing by Stor-Ind+Trans method, Time Span= 5.00-20.00 hrs, dt= 0.05 hrs

Reach DP3: Shoreline 3

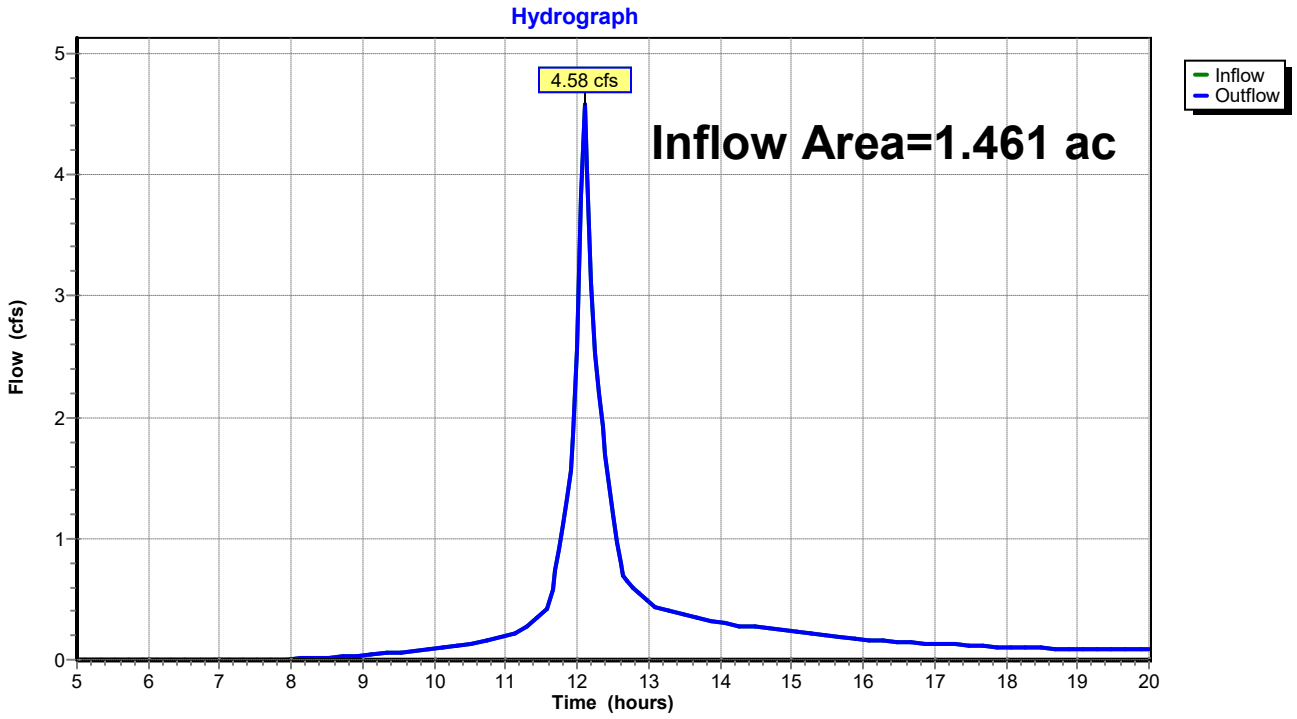

Summary for Reach SP1: SACO RIVER / OCEAN

Inflow Area = 2.557 ac, 0.67% Impervious, Inflow Depth > 2.51" for 10-yr event
Inflow = 7.10 cfs @ 12.10 hrs, Volume= 0.534 af
Outflow = 7.10 cfs @ 12.10 hrs, Volume= 0.534 af, Atten= 0%, Lag= 0.0 min

Routing by Stor-Ind+Trans method, Time Span= 5.00-20.00 hrs, dt= 0.05 hrs

Reach SP1: SACO RIVER / OCEAN

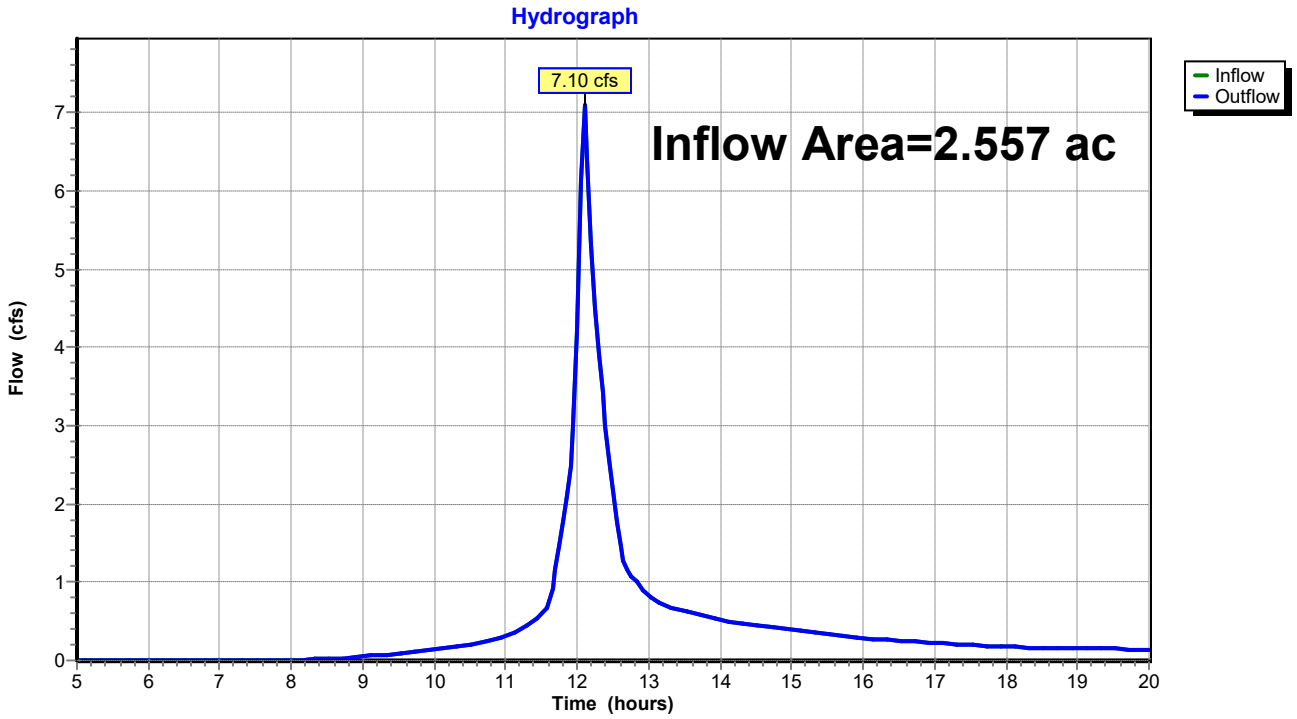

Time span=5.00-20.00 hrs, dt=0.05 hrs, 301 points
Runoff by SCS TR-20 method, UH=SCS, Weighted-CN
Reach routing by Stor-Ind+Trans method - Pond routing by Stor-Ind method

Subcatchment 1S: Pre Subcatchment 1 Runoff Area=20,023 sf 0.00% Impervious Runoff Depth>3.42"
Flow Length=138' Tc=4.0 min CN=77 Runoff=2.07 cfs 0.131 af

Subcatchment 2S: Pre Subcatchment 2 Runoff Area=27,744 sf 0.00% Impervious Runoff Depth>3.41"
Flow Length=198' Tc=12.7 min CN=77 Runoff=2.17 cfs 0.181 af

Subcatchment 3S: Pre Subcatchment 3 Runoff Area=63,622 sf 1.18% Impervious Runoff Depth>3.72"
Flow Length=445' Tc=7.0 min CN=80 Runoff=6.44 cfs 0.452 af

Reach DP1: Shoreline 1 Inflow=2.07 cfs 0.131 af
Outflow=2.07 cfs 0.131 af

Reach DP2: Shoreline 2 Inflow=2.17 cfs 0.181 af
Outflow=2.17 cfs 0.181 af

Reach DP3: Shoreline 3 Inflow=6.44 cfs 0.452 af
Outflow=6.44 cfs 0.452 af

Reach SP1: SACO RIVER / OCEAN Inflow=10.07 cfs 0.764 af
Outflow=10.07 cfs 0.764 af

Total Runoff Area = 2.557 ac Runoff Volume = 0.764 af Average Runoff Depth = 3.59"
99.33% Pervious = 2.540 ac 0.67% Impervious = 0.017 ac

Summary for Subcatchment 1S: Pre Subcatchment 1

Runoff = 2.07 cfs @ 12.06 hrs, Volume= 0.131 af, Depth> 3.42"
Routed to Reach DP1 : Shoreline 1

Runoff by SCS TR-20 method, UH=SCS, Weighted-CN, Time Span= 5.00-20.00 hrs, dt= 0.05 hrs
Type III 24-hr 25-yr Rainfall=6.20"

Area (sf)	CN	Description
20,023	77	Woods, Good, HSG D
20,023		100.00% Pervious Area

Tc (min)	Length (feet)	Slope (ft/ft)	Velocity (ft/sec)	Capacity (cfs)	Description
3.1	20	0.1000	0.11		**Sheet Flow, Tc-1** Woods: Light underbrush n= 0.400 P2= 3.30"
0.9	118	0.1780	2.11		**Shallow Concentrated Flow, Tc-2** Woodland Kv= 5.0 fps
4.0	138	Total			

Subcatchment 1S: Pre Subcatchment 1

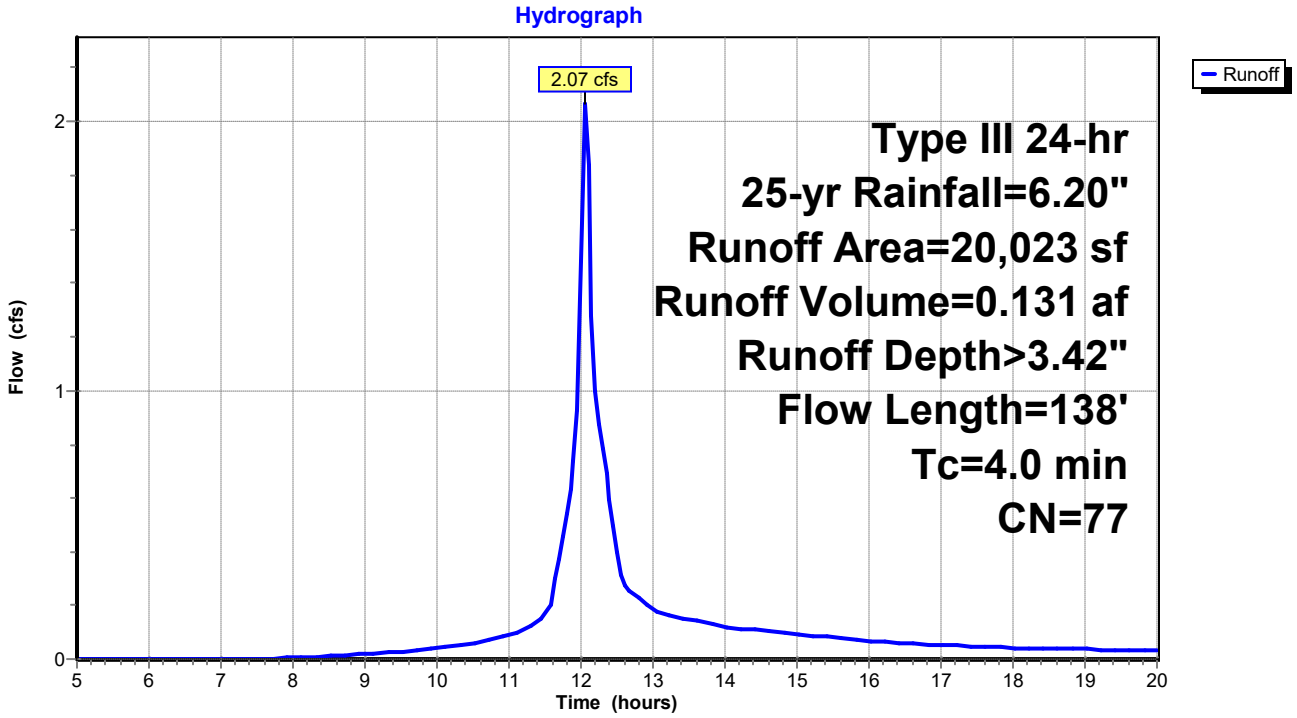

Summary for Subcatchment 2S: Pre Subcatchment 2

Runoff = 2.17 cfs @ 12.18 hrs, Volume= 0.181 af, Depth> 3.41"
Routed to Reach DP2 : Shoreline 2

Runoff by SCS TR-20 method, UH=SCS, Weighted-CN, Time Span= 5.00-20.00 hrs, dt= 0.05 hrs
Type III 24-hr 25-yr Rainfall=6.20"

Area (sf)	CN	Description
27,744	77	Woods, Good, HSG D
27,744		100.00% Pervious Area

Tc (min)	Length (feet)	Slope (ft/ft)	Velocity (ft/sec)	Capacity (cfs)	Description
12.3	148	0.1689	0.20		**Sheet Flow, Tc-1** Woods: Light underbrush n= 0.400 P2= 3.30"
0.4	50	0.1800	2.12		**Shallow Concentrated Flow, Tc-2** Woodland Kv= 5.0 fps
12.7	198	Total			

Subcatchment 2S: Pre Subcatchment 2

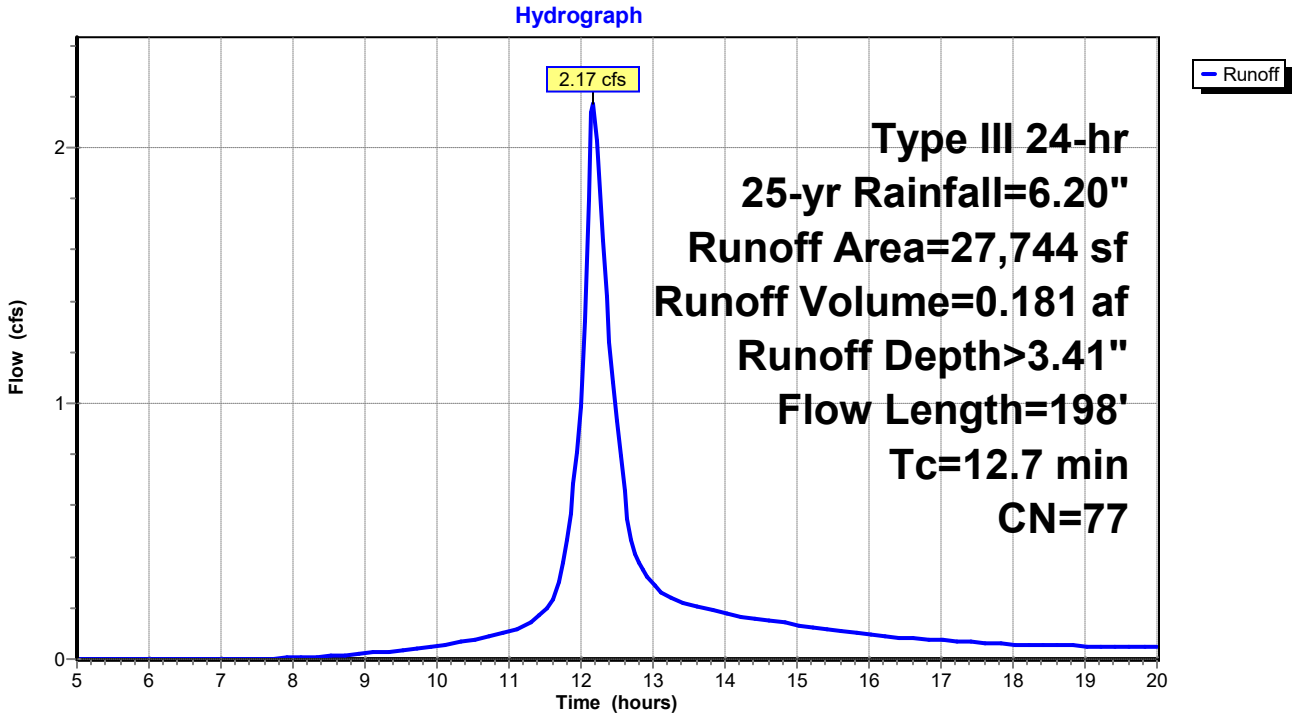

Summary for Subcatchment 3S: Pre Subcatchment 3

Runoff = 6.44 cfs @ 12.10 hrs, Volume= 0.452 af, Depth> 3.72"
Routed to Reach DP3 : Shoreline 3

Runoff by SCS TR-20 method, UH=SCS, Weighted-CN, Time Span= 5.00-20.00 hrs, dt= 0.05 hrs
Type III 24-hr 25-yr Rainfall=6.20"

	Area (sf)	CN	Description
	51,121	77	Woods, Good, HSG D
	751	98	Roofs, HSG D
	4,795	96	Gravel surface, HSG D
*	6,955	88	Sand Beach, HSG D
	63,622	80	Weighted Average
	62,871		98.82% Pervious Area
	751		1.18% Impervious Area

Tc (min)	Length (feet)	Slope (ft/ft)	Velocity (ft/sec)	Capacity (cfs)	Description
2.7	23	0.1740	0.14		**Sheet Flow, Tc-1** Woods: Light underbrush n= 0.400 P2= 3.30"
1.0	70	0.0571	1.19		**Shallow Concentrated Flow, Tc-2** Woodland Kv= 5.0 fps
0.5	170	0.1059	5.24		**Shallow Concentrated Flow, Tc-3** Unpaved Kv= 16.1 fps
2.5	140	0.0357	0.94		**Shallow Concentrated Flow, Tc-4** Woodland Kv= 5.0 fps
0.3	42	0.0714	2.67		**Shallow Concentrated Flow, Tc-4** Nearly Bare & Untilled Kv= 10.0 fps
7.0	445	Total			

Subcatchment 3S: Pre Subcatchment 3

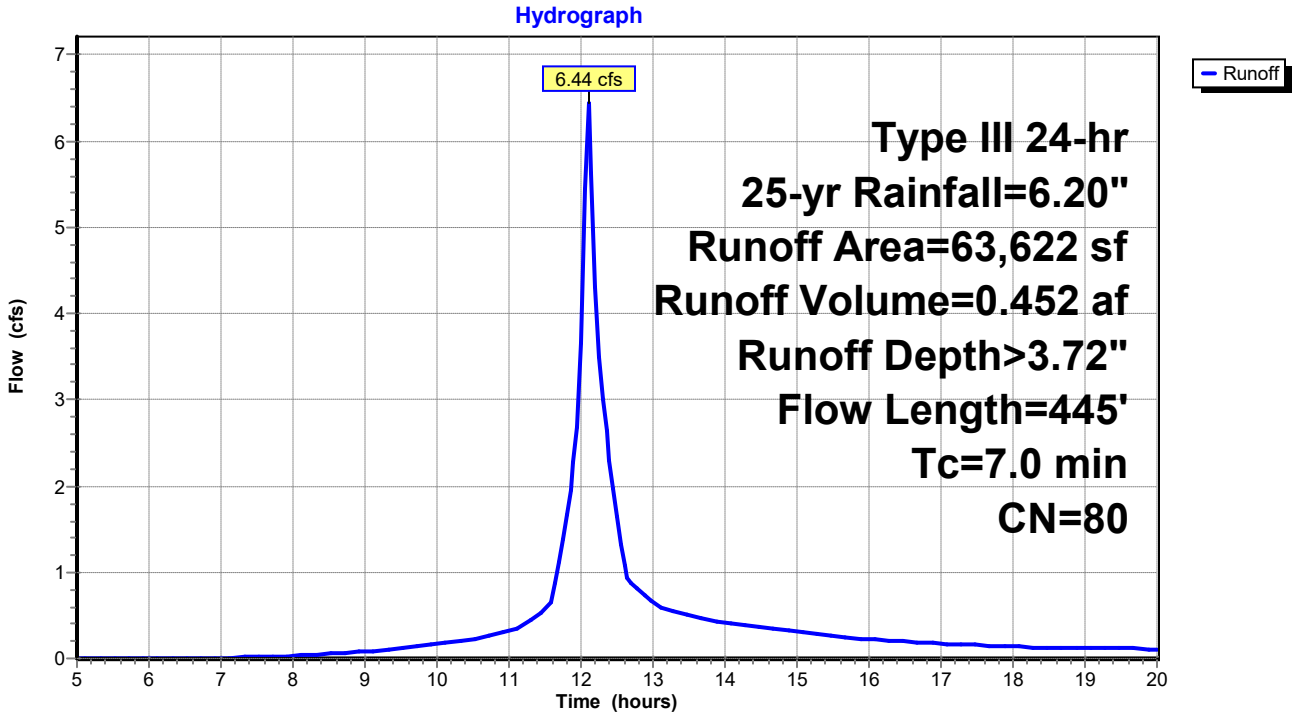

Summary for Reach DP1: Shoreline 1

Inflow Area = 0.460 ac, 0.00% Impervious, Inflow Depth > 3.42" for 25-yr event
Inflow = 2.07 cfs @ 12.06 hrs, Volume= 0.131 af
Outflow = 2.07 cfs @ 12.06 hrs, Volume= 0.131 af, Atten= 0%, Lag= 0.0 min
Routed to Reach SP1 : SACO RIVER / OCEAN

Routing by Stor-Ind+Trans method, Time Span= 5.00-20.00 hrs, dt= 0.05 hrs

Reach DP1: Shoreline 1

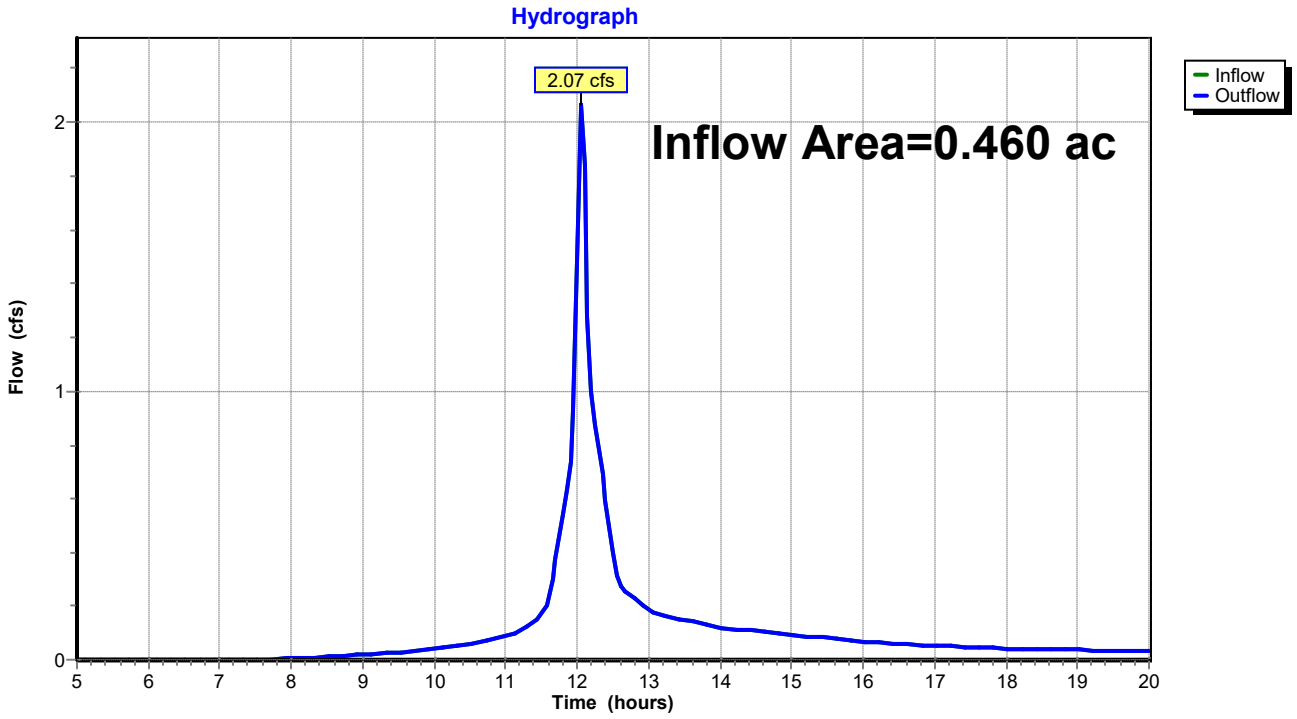

Summary for Reach DP2: Shoreline 2

Inflow Area = 0.637 ac, 0.00% Impervious, Inflow Depth > 3.41" for 25-yr event
Inflow = 2.17 cfs @ 12.18 hrs, Volume= 0.181 af
Outflow = 2.17 cfs @ 12.18 hrs, Volume= 0.181 af, Atten= 0%, Lag= 0.0 min
Routed to Reach SP1 : SACO RIVER / OCEAN

Routing by Stor-Ind+Trans method, Time Span= 5.00-20.00 hrs, dt= 0.05 hrs

Reach DP2: Shoreline 2

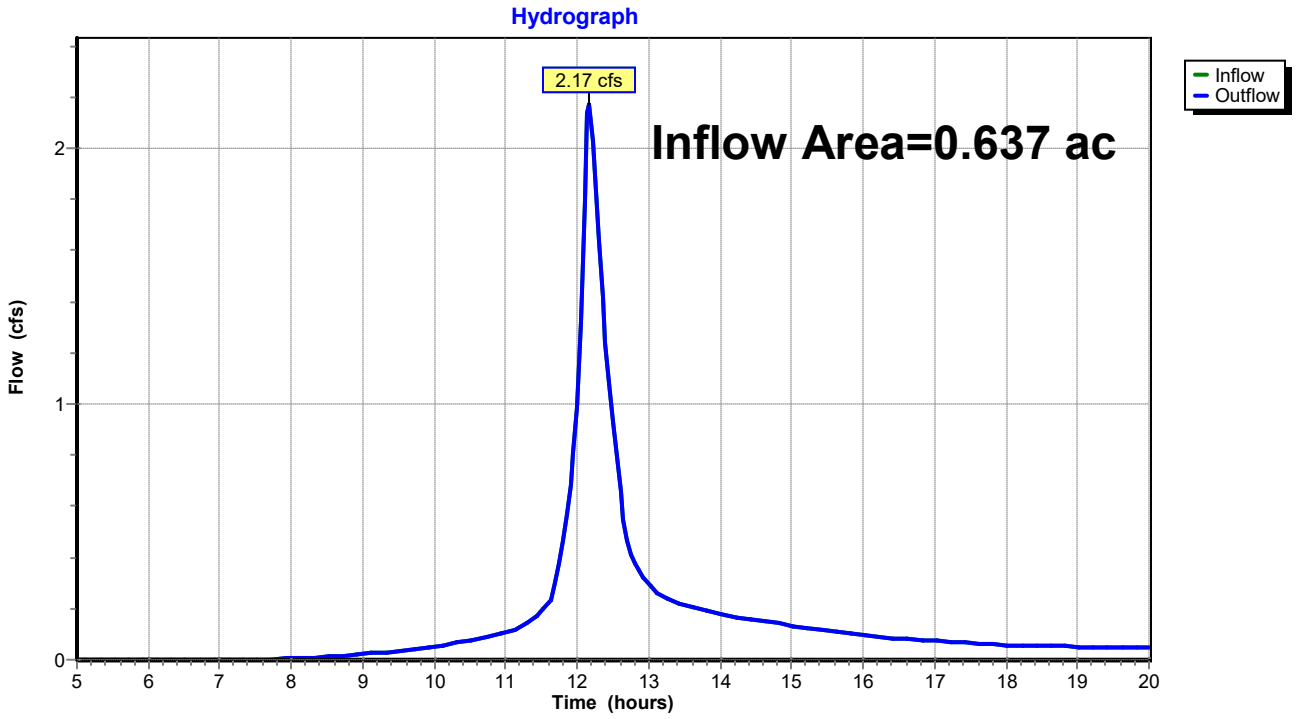

Summary for Reach DP3: Shoreline 3

Inflow Area = 1.461 ac, 1.18% Impervious, Inflow Depth > 3.72" for 25-yr event
Inflow = 6.44 cfs @ 12.10 hrs, Volume= 0.452 af
Outflow = 6.44 cfs @ 12.10 hrs, Volume= 0.452 af, Atten= 0%, Lag= 0.0 min
Routed to Reach SP1 : SACO RIVER / OCEAN

Routing by Stor-Ind+Trans method, Time Span= 5.00-20.00 hrs, dt= 0.05 hrs

Reach DP3: Shoreline 3

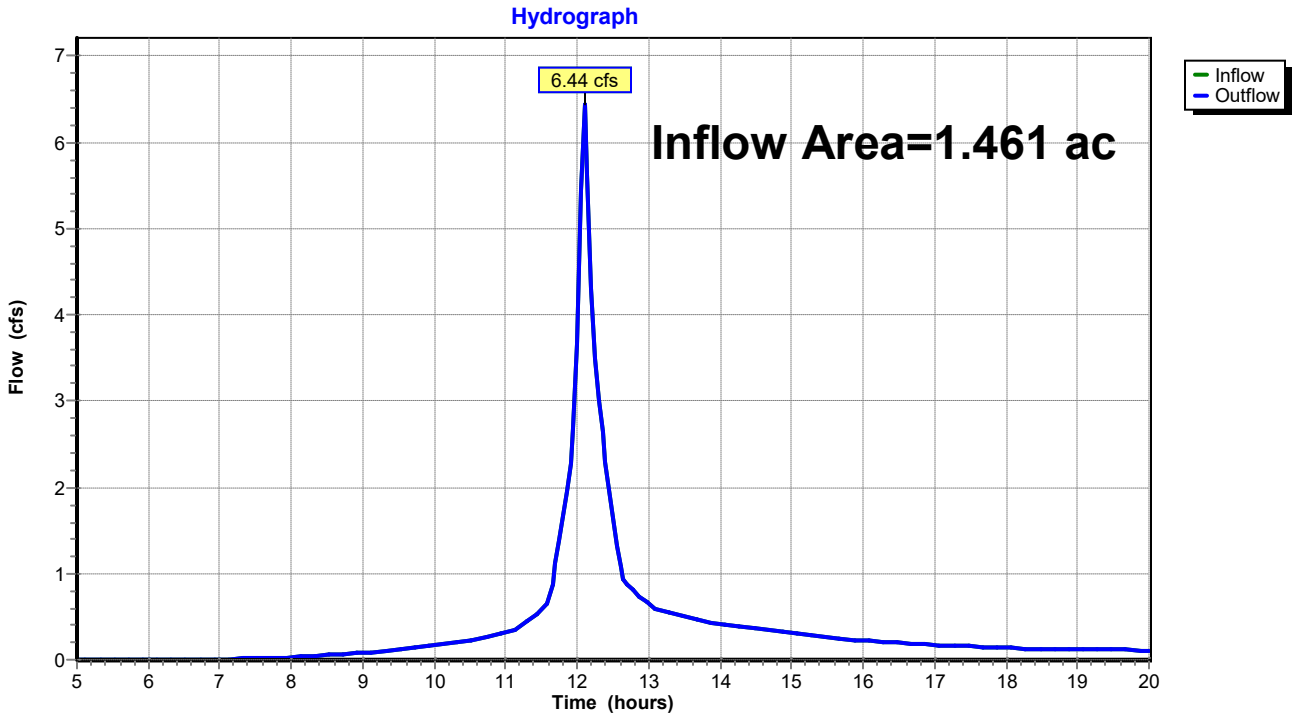

Summary for Reach SP1: SACO RIVER / OCEAN

Inflow Area = 2.557 ac, 0.67% Impervious, Inflow Depth > 3.59" for 25-yr event
Inflow = 10.07 cfs @ 12.10 hrs, Volume= 0.764 af
Outflow = 10.07 cfs @ 12.10 hrs, Volume= 0.764 af, Atten= 0%, Lag= 0.0 min

Routing by Stor-Ind+Trans method, Time Span= 5.00-20.00 hrs, dt= 0.05 hrs

Reach SP1: SACO RIVER / OCEAN

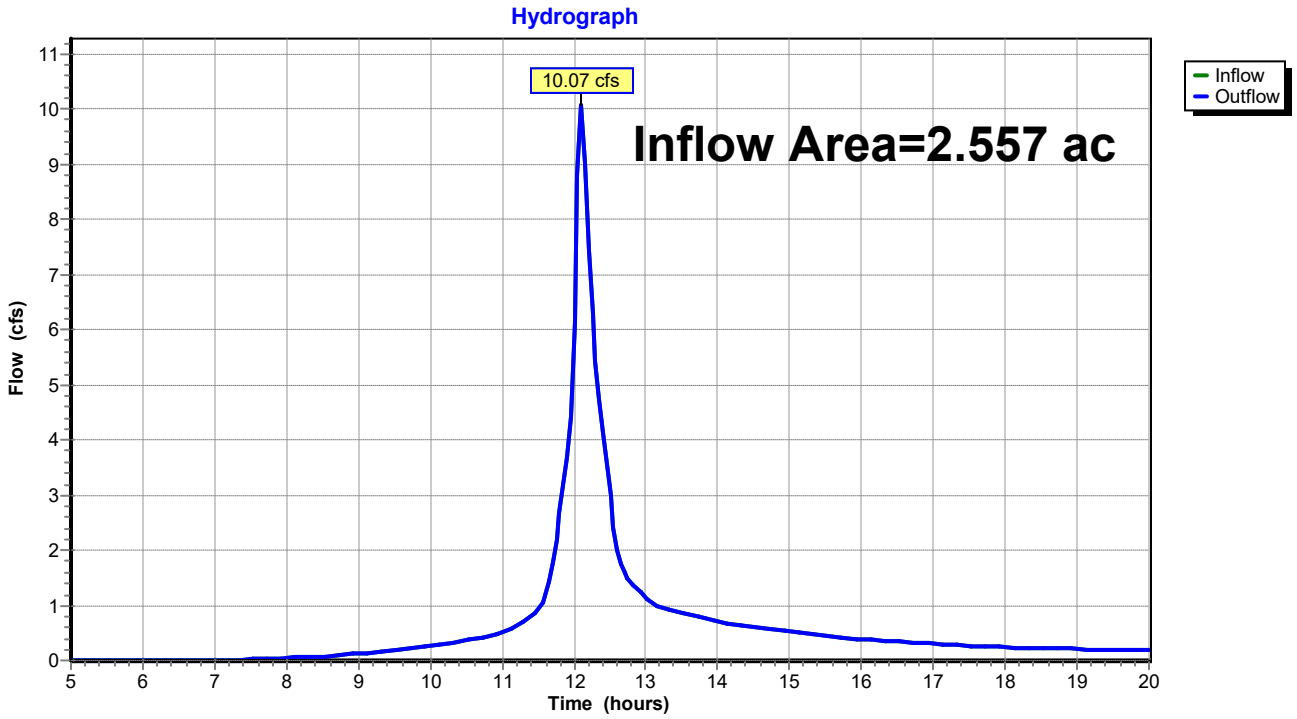

Time span=5.00-20.00 hrs, dt=0.05 hrs, 301 points
Runoff by SCS TR-20 method, UH=SCS, Weighted-CN
Reach routing by Stor-Ind+Trans method - Pond routing by Stor-Ind method

Subcatchment 1S: Pre Subcatchment 1 Runoff Area=20,023 sf 0.00% Impervious Runoff Depth>5.57"
Flow Length=138' Tc=4.0 min CN=77 Runoff=3.31 cfs 0.213 af

Subcatchment 2S: Pre Subcatchment 2 Runoff Area=27,744 sf 0.00% Impervious Runoff Depth>5.56"
Flow Length=198' Tc=12.7 min CN=77 Runoff=3.50 cfs 0.295 af

Subcatchment 3S: Pre Subcatchment 3 Runoff Area=63,622 sf 1.18% Impervious Runoff Depth>5.92"
Flow Length=445' Tc=7.0 min CN=80 Runoff=10.05 cfs 0.721 af

Reach DP1: Shoreline 1 Inflow=3.31 cfs 0.213 af
Outflow=3.31 cfs 0.213 af

Reach DP2: Shoreline 2 Inflow=3.50 cfs 0.295 af
Outflow=3.50 cfs 0.295 af

Reach DP3: Shoreline 3 Inflow=10.05 cfs 0.721 af
Outflow=10.05 cfs 0.721 af

Reach SP1: SACO RIVER / OCEAN Inflow=15.89 cfs 1.229 af
Outflow=15.89 cfs 1.229 af

Total Runoff Area = 2.557 ac Runoff Volume = 1.229 af Average Runoff Depth = 5.77"
99.33% Pervious = 2.540 ac 0.67% Impervious = 0.017 ac

Summary for Subcatchment 1S: Pre Subcatchment 1

Runoff = 3.31 cfs @ 12.06 hrs, Volume= 0.213 af, Depth> 5.57"
Routed to Reach DP1 : Shoreline 1

Runoff by SCS TR-20 method, UH=SCS, Weighted-CN, Time Span= 5.00-20.00 hrs, dt= 0.05 hrs
Type III 24-hr 100-yr Rainfall=8.70"

Area (sf)	CN	Description
20,023	77	Woods, Good, HSG D
20,023		100.00% Pervious Area

Tc (min)	Length (feet)	Slope (ft/ft)	Velocity (ft/sec)	Capacity (cfs)	Description
3.1	20	0.1000	0.11		**Sheet Flow, Tc-1** Woods: Light underbrush n= 0.400 P2= 3.30"
0.9	118	0.1780	2.11		**Shallow Concentrated Flow, Tc-2** Woodland Kv= 5.0 fps
4.0	138	Total			

Subcatchment 1S: Pre Subcatchment 1

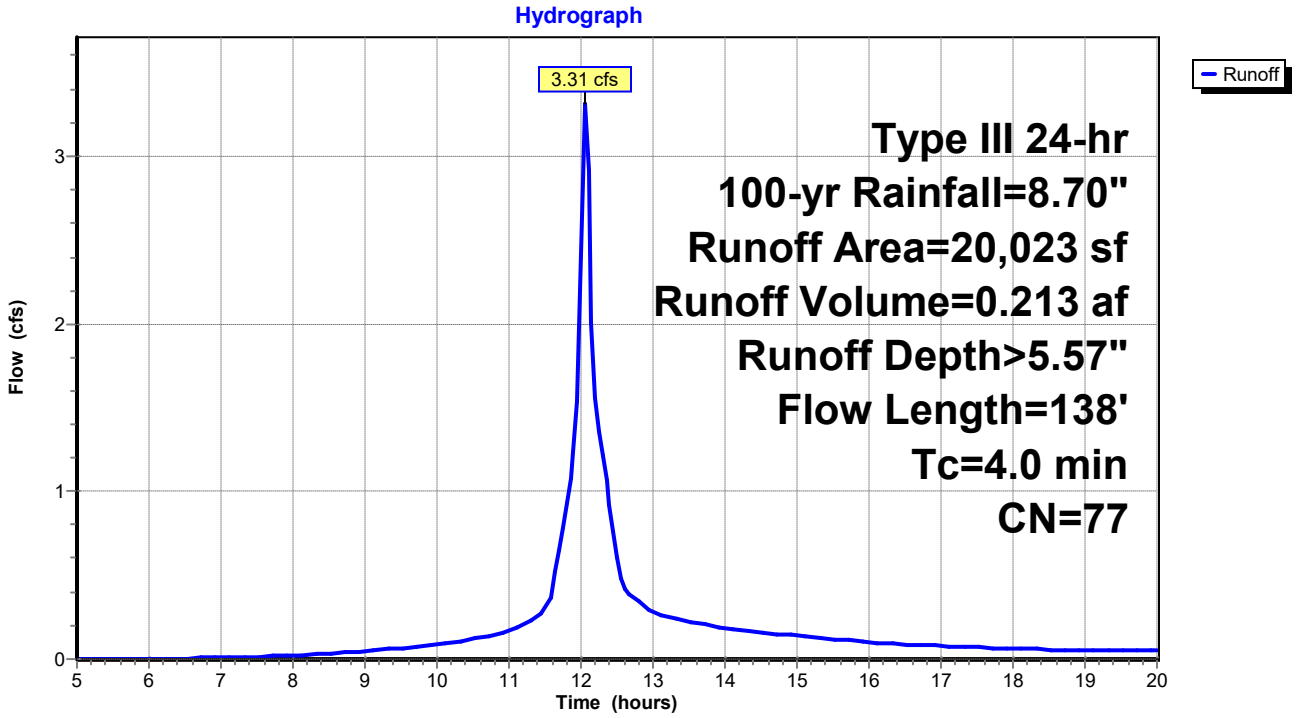

Summary for Subcatchment 2S: Pre Subcatchment 2

Runoff = 3.50 cfs @ 12.17 hrs, Volume= 0.295 af, Depth> 5.56"
Routed to Reach DP2 : Shoreline 2

Runoff by SCS TR-20 method, UH=SCS, Weighted-CN, Time Span= 5.00-20.00 hrs, dt= 0.05 hrs
Type III 24-hr 100-yr Rainfall=8.70"

Area (sf)	CN	Description
27,744	77	Woods, Good, HSG D
27,744		100.00% Pervious Area

Tc (min)	Length (feet)	Slope (ft/ft)	Velocity (ft/sec)	Capacity (cfs)	Description
12.3	148	0.1689	0.20		**Sheet Flow, Tc-1** Woods: Light underbrush n= 0.400 P2= 3.30"
0.4	50	0.1800	2.12		**Shallow Concentrated Flow, Tc-2** Woodland Kv= 5.0 fps
12.7	198	Total			

Subcatchment 2S: Pre Subcatchment 2

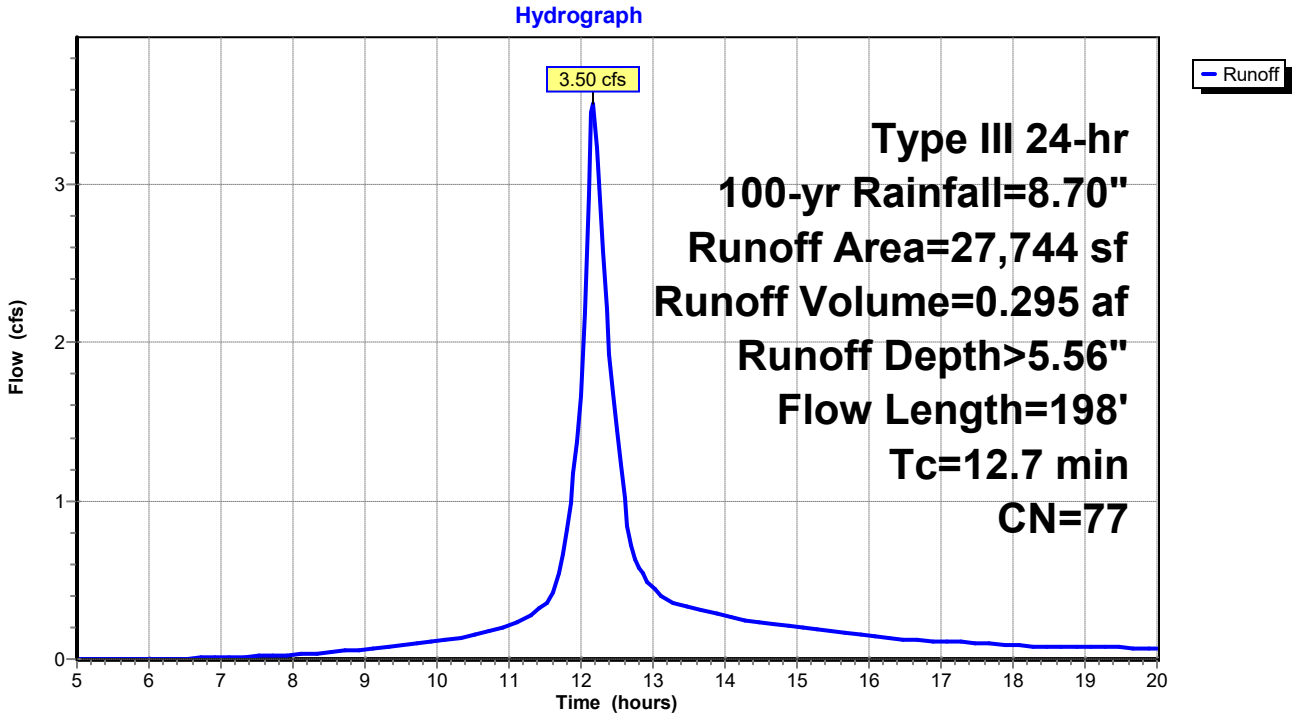

Summary for Subcatchment 3S: Pre Subcatchment 3

Runoff = 10.05 cfs @ 12.10 hrs, Volume= 0.721 af, Depth> 5.92"
Routed to Reach DP3 : Shoreline 3

Runoff by SCS TR-20 method, UH=SCS, Weighted-CN, Time Span= 5.00-20.00 hrs, dt= 0.05 hrs
Type III 24-hr 100-yr Rainfall=8.70"

	Area (sf)	CN	Description
	51,121	77	Woods, Good, HSG D
	751	98	Roofs, HSG D
	4,795	96	Gravel surface, HSG D
*	6,955	88	Sand Beach, HSG D
	63,622	80	Weighted Average
	62,871		98.82% Pervious Area
	751		1.18% Impervious Area

Tc (min)	Length (feet)	Slope (ft/ft)	Velocity (ft/sec)	Capacity (cfs)	Description
2.7	23	0.1740	0.14		**Sheet Flow, Tc-1** Woods: Light underbrush n= 0.400 P2= 3.30"
1.0	70	0.0571	1.19		**Shallow Concentrated Flow, Tc-2** Woodland Kv= 5.0 fps
0.5	170	0.1059	5.24		**Shallow Concentrated Flow, Tc-3** Unpaved Kv= 16.1 fps
2.5	140	0.0357	0.94		**Shallow Concentrated Flow, Tc-4** Woodland Kv= 5.0 fps
0.3	42	0.0714	2.67		**Shallow Concentrated Flow, Tc-4** Nearly Bare & Untilled Kv= 10.0 fps
7.0	445	Total			

Subcatchment 3S: Pre Subcatchment 3

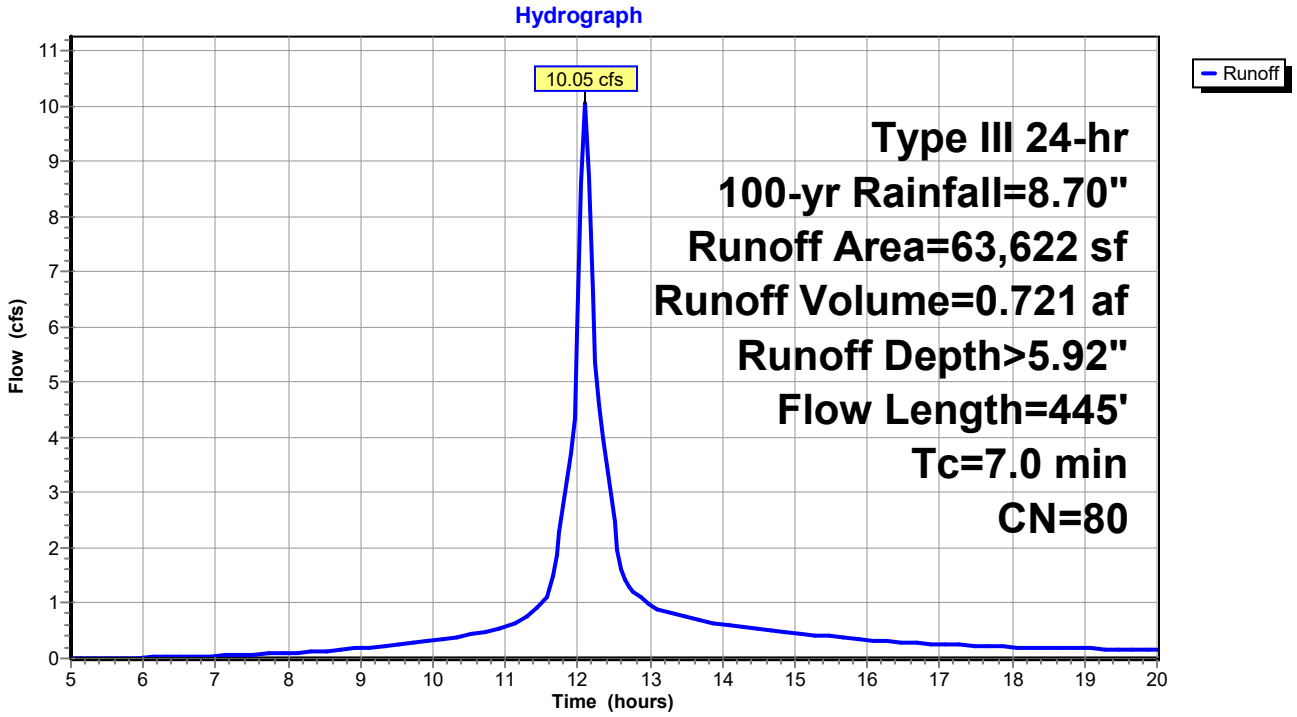

Summary for Reach DP1: Shoreline 1

Inflow Area = 0.460 ac, 0.00% Impervious, Inflow Depth > 5.57" for 100-yr event
Inflow = 3.31 cfs @ 12.06 hrs, Volume= 0.213 af
Outflow = 3.31 cfs @ 12.06 hrs, Volume= 0.213 af, Atten= 0%, Lag= 0.0 min
Routed to Reach SP1 : SACO RIVER / OCEAN

Routing by Stor-Ind+Trans method, Time Span= 5.00-20.00 hrs, dt= 0.05 hrs

Reach DP1: Shoreline 1

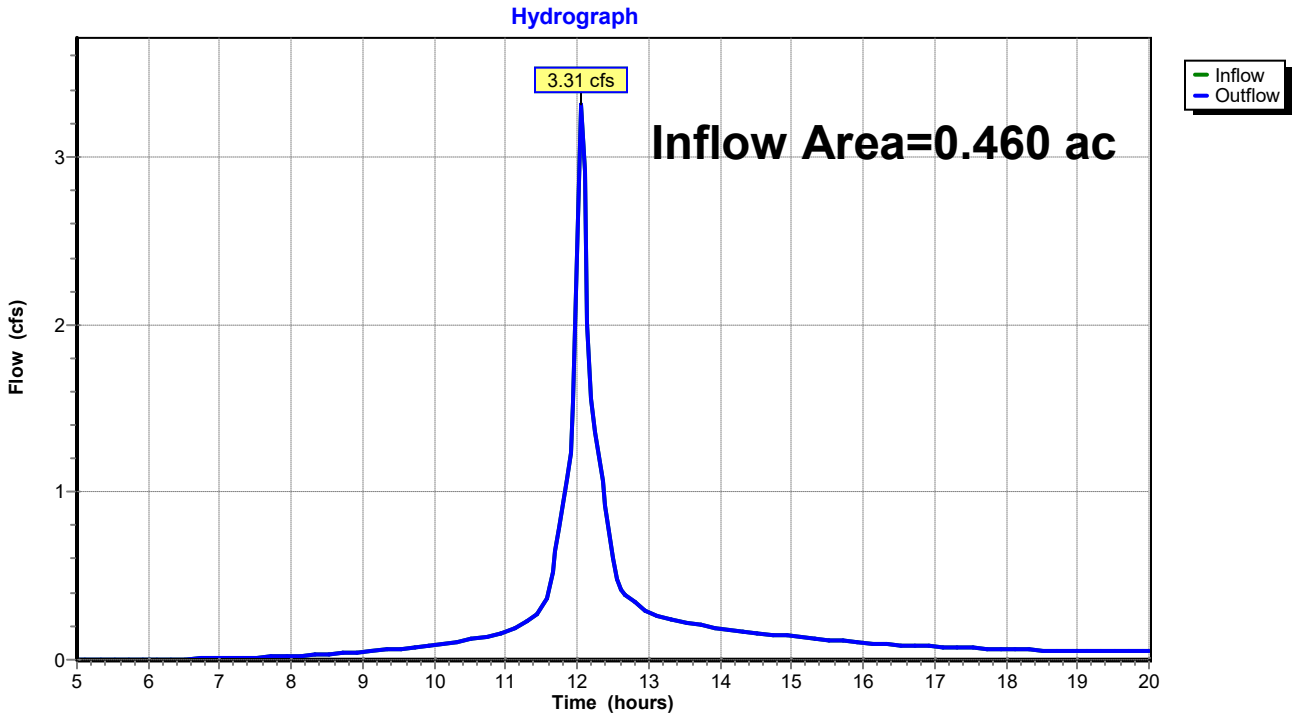

Summary for Reach DP2: Shoreline 2

Inflow Area = 0.637 ac, 0.00% Impervious, Inflow Depth > 5.56" for 100-yr event
Inflow = 3.50 cfs @ 12.17 hrs, Volume= 0.295 af
Outflow = 3.50 cfs @ 12.17 hrs, Volume= 0.295 af, Atten= 0%, Lag= 0.0 min
Routed to Reach SP1 : SACO RIVER / OCEAN

Routing by Stor-Ind+Trans method, Time Span= 5.00-20.00 hrs, dt= 0.05 hrs

Reach DP2: Shoreline 2

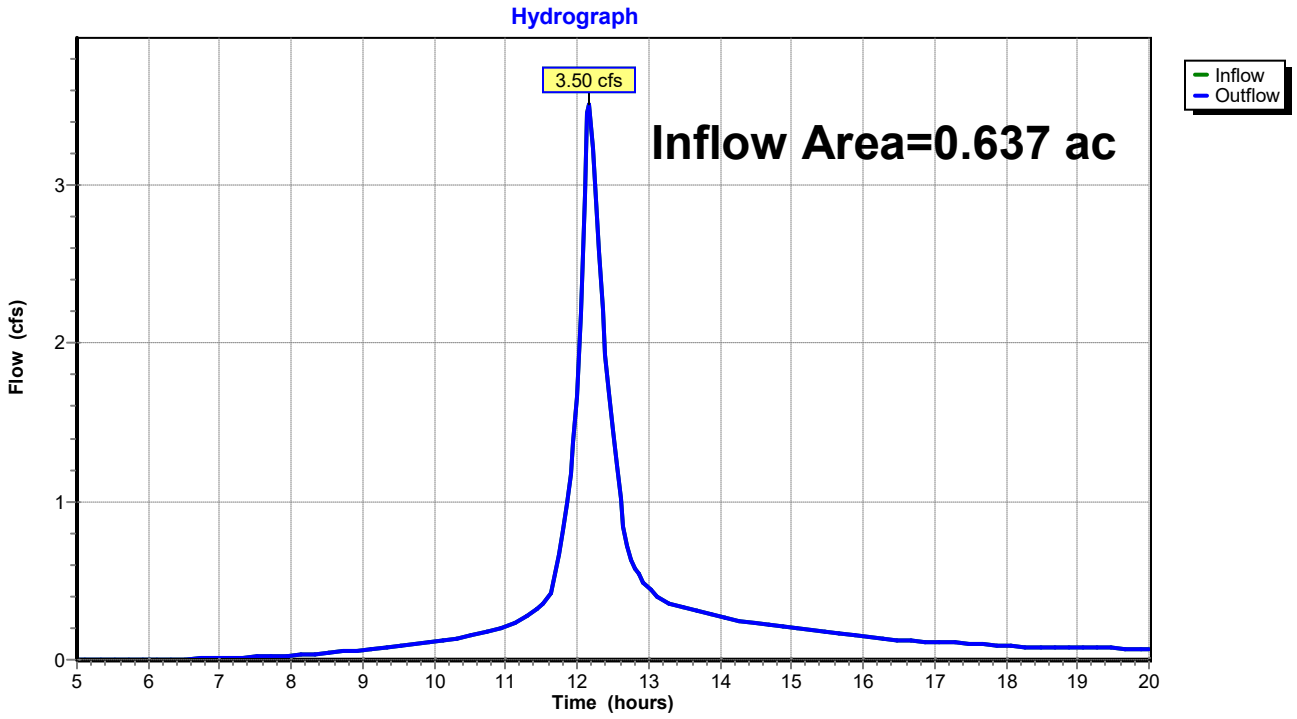

Summary for Reach DP3: Shoreline 3

Inflow Area = 1.461 ac, 1.18% Impervious, Inflow Depth > 5.92" for 100-yr event
Inflow = 10.05 cfs @ 12.10 hrs, Volume= 0.721 af
Outflow = 10.05 cfs @ 12.10 hrs, Volume= 0.721 af, Atten= 0%, Lag= 0.0 min
Routed to Reach SP1 : SACO RIVER / OCEAN

Routing by Stor-Ind+Trans method, Time Span= 5.00-20.00 hrs, dt= 0.05 hrs

Reach DP3: Shoreline 3

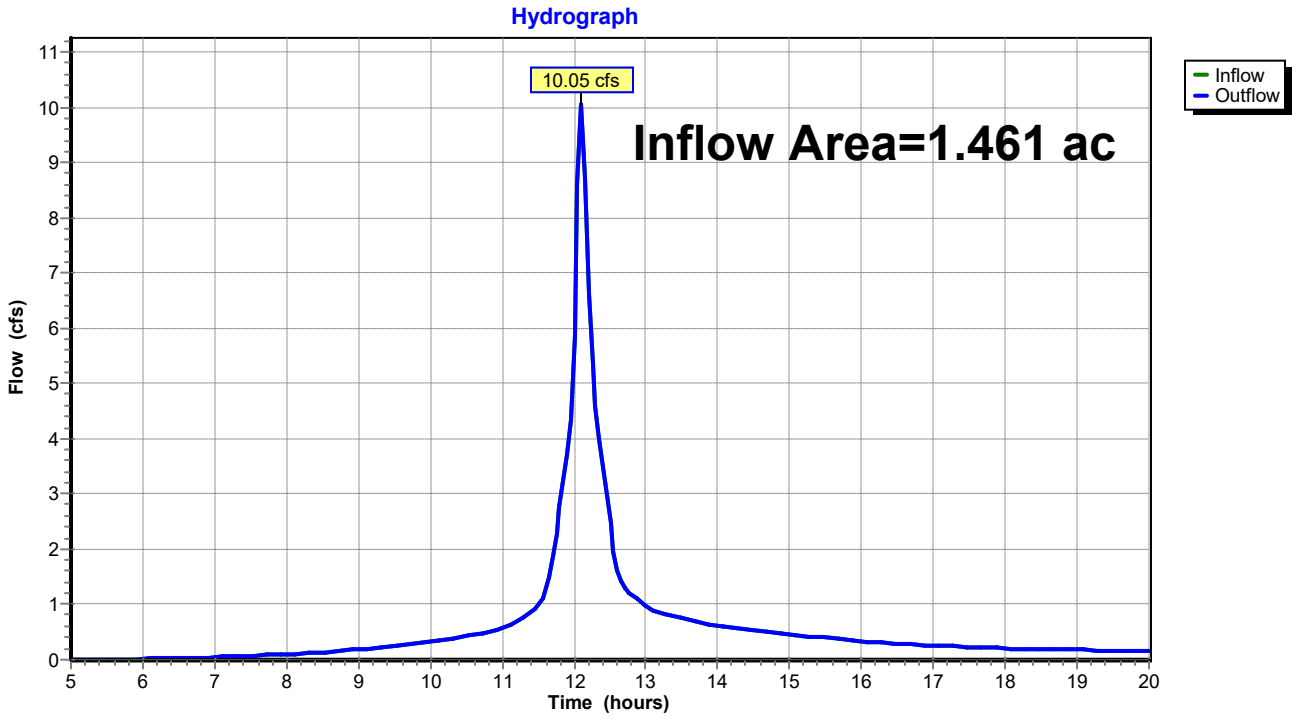

Summary for Reach SP1: SACO RIVER / OCEAN

Inflow Area = 2.557 ac, 0.67% Impervious, Inflow Depth > 5.77" for 100-yr event
Inflow = 15.89 cfs @ 12.10 hrs, Volume= 1.229 af
Outflow = 15.89 cfs @ 12.10 hrs, Volume= 1.229 af, Atten= 0%, Lag= 0.0 min

Routing by Stor-Ind+Trans method, Time Span= 5.00-20.00 hrs, dt= 0.05 hrs

Reach SP1: SACO RIVER / OCEAN

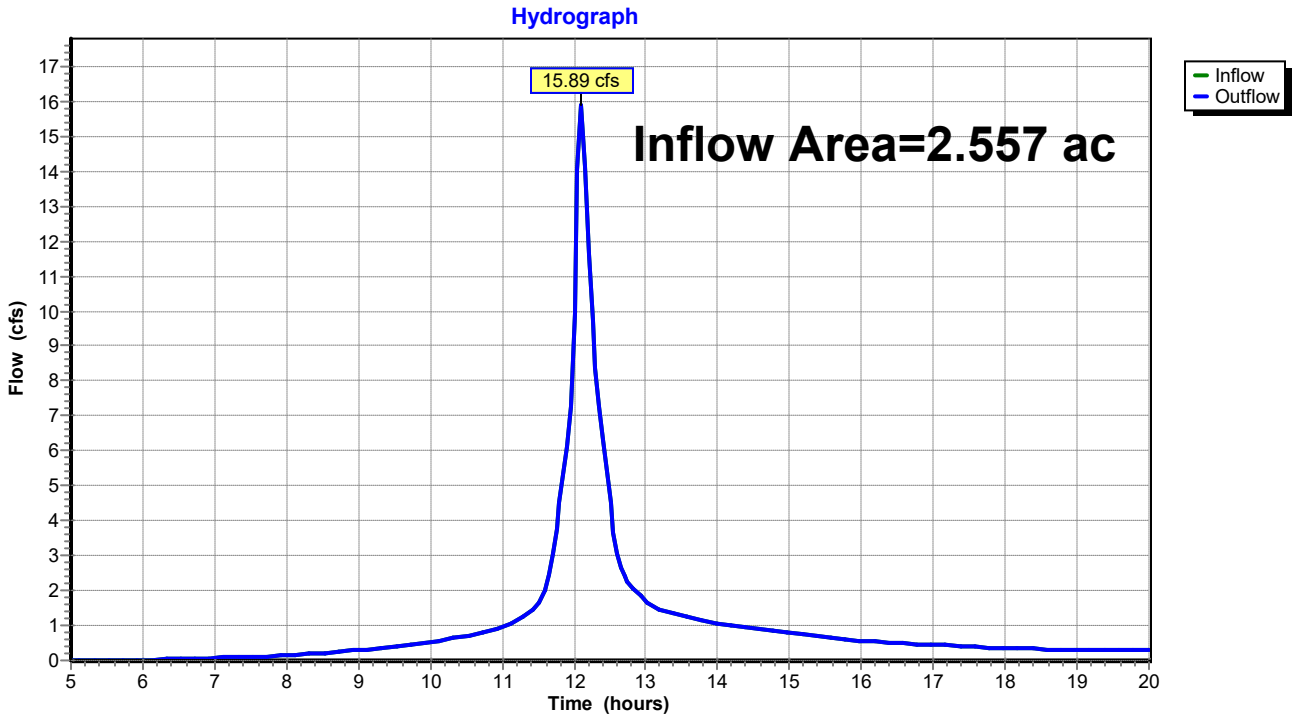

TABLE OF CONTENTS

Project Reports
1 Routing Diagram
2 Project Notes
3 Rainfall Events Listing
4 Area Listing (all nodes)
5 Soil Listing (all nodes)
6 Ground Covers (all nodes)

2-yr Event
7 Node Listing
8 Subcat 1S: Pre Subcatchment 1
9 Subcat 2S: Pre Subcatchment 2
10 Subcat 3S: Pre Subcatchment 3
12 Reach DP1: Shoreline 1
13 Reach DP2: Shoreline 2
14 Reach DP3: Shoreline 3
15 Reach SP1: SACO RIVER / OCEAN

10-yr Event
16 Node Listing
17 Subcat 1S: Pre Subcatchment 1
18 Subcat 2S: Pre Subcatchment 2
19 Subcat 3S: Pre Subcatchment 3
21 Reach DP1: Shoreline 1
22 Reach DP2: Shoreline 2
23 Reach DP3: Shoreline 3
24 Reach SP1: SACO RIVER / OCEAN

25-yr Event
25 Node Listing
26 Subcat 1S: Pre Subcatchment 1
27 Subcat 2S: Pre Subcatchment 2
28 Subcat 3S: Pre Subcatchment 3
30 Reach DP1: Shoreline 1
31 Reach DP2: Shoreline 2
32 Reach DP3: Shoreline 3
33 Reach SP1: SACO RIVER / OCEAN

100-yr Event
34 Node Listing
35 Subcat 1S: Pre Subcatchment 1
36 Subcat 2S: Pre Subcatchment 2
37 Subcat 3S: Pre Subcatchment 3
39 Reach DP1: Shoreline 1
40 Reach DP2: Shoreline 2
41 Reach DP3: Shoreline 3

42 Reach SP1: SACO RIVER / OCEAN

Appendix C

Post Development HydroCAD Calculations

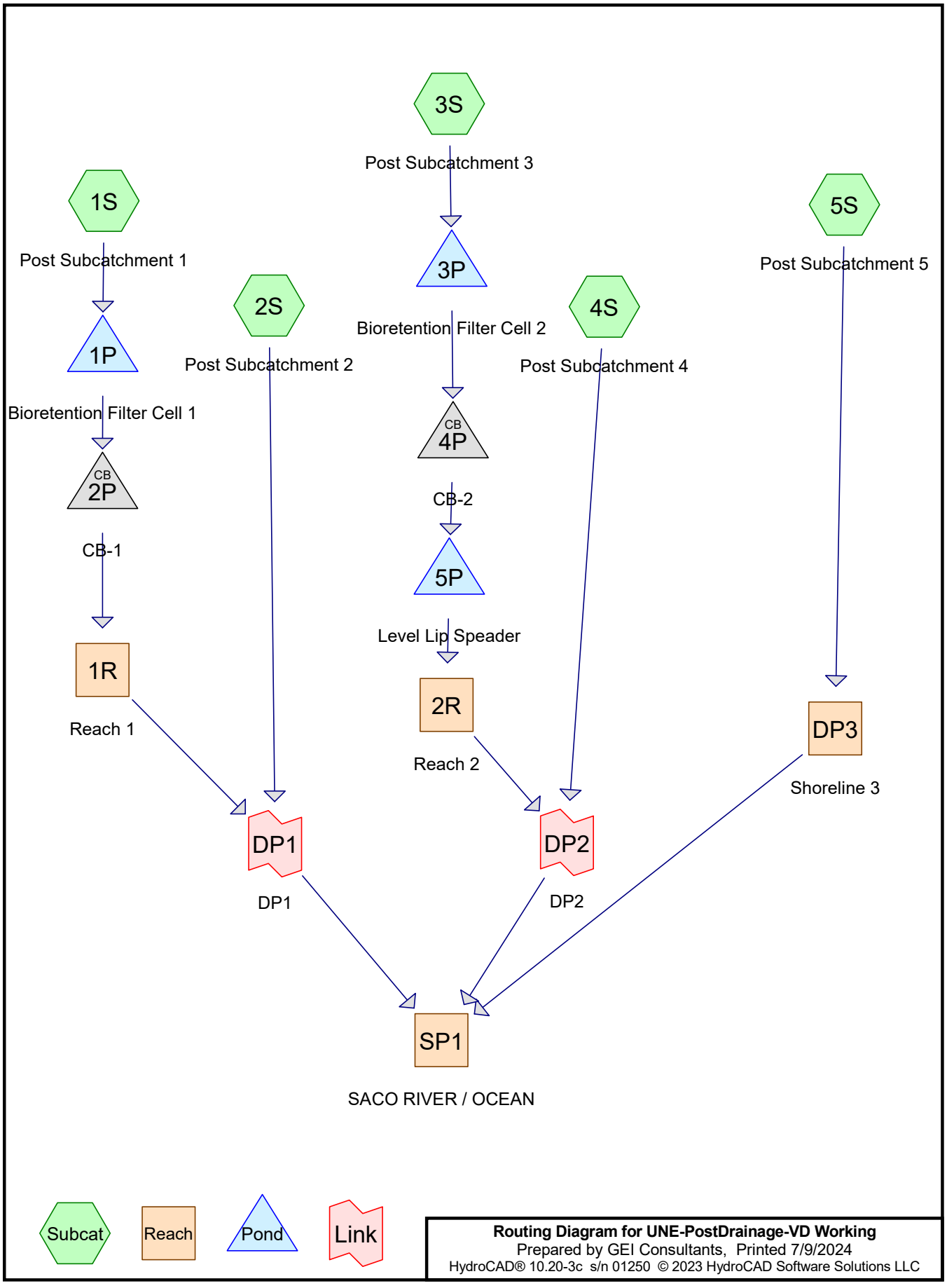
3S
Post Subcatchment 3
1S
Post Subcatchment 1
5S
Post Subcatchment 5
3P
2S
4S
1P
Post Subcatchment 2
Bioretention Filter Cell 2
Post Subcatchment 4
Bioretention Filter Cell 1
CB
4P
CB
2P
CB-2
CB-1
5P
Level Lip Spreader
1R
2R
DP3
Reach 1
Reach 2
Shoreline 3
DP1
DP2
DP1
DP2
SP1
SACO RIVER / OCEAN
Subcat
Reach
Pond
Link
Routing Diagram for UNE-PostDrainage-VD Working
Prepared by GEI Consultants, Printed 7/9/2024
HydroCAD® 10.20-3c s/n 01250 © 2023 HydroCAD Software Solutions LLC

Project Notes

Defined 3 rainfall events from ME-York IDF

Rainfall Events Listing

Event#	Event Name	Storm Type	Curve	Mode	Duration (hours)	B/B	Depth (inches)	AMC
1	2-yr	Type III 24-hr		Default	24.00	1	3.30	2
2	10-yr	Type III 24-hr		Default	24.00	1	4.90	2
3	25-yr	Type III 24-hr		Default	24.00	1	6.20	2
4	100-yr	Type III 24-hr		Default	24.00	1	8.70	2
5	WQ	Type III 24-hr		Default	24.00	1	1.00	2

Area Listing (all nodes)

Area (acres)	CN	Description (subcatchment-numbers)
0.081	80	>75% Grass cover, Good, HSG D (1S, 3S, 4S)
0.013	73	Biofiltration cell, Good, HSG D (3S)
0.020	73	Bioretention Filter Cell, Good, HSG D (1S)
0.089	96	Gravel surface, HSG D (5S)
0.039	98	Ledge, HSG D (1S, 3S)
0.090	98	Paved Access Drive, HSG D (1S)
0.038	98	Paved acccess drive, HSG D (5S)
0.093	98	Paved access drive, HSG D (3S, 4S)
0.028	98	Paved parking, HSG D (2S)
0.017	98	Roofs, HSG D (5S)
0.160	88	Sand beach, HSG D (5S)
0.362	79	Woods, Fair, HSG D (4S)
1.526	77	Woods, Good, HSG D (1S, 2S, 3S, 5S)
2.557	**81**	**TOTAL AREA**

Soil Listing (all nodes)

Area (acres)	Soil Group	Subcatchment Numbers
0.000	HSG A	
0.000	HSG B	
0.000	HSG C	
2.557	HSG D	1S, 2S, 3S, 4S, 5S
0.000	Other	
2.557		**TOTAL AREA**

Ground Covers (all nodes)

HSG-A (acres)	HSG-B (acres)	HSG-C (acres)	HSG-D (acres)	Other (acres)	Total (acres)	Ground Cover	Subcatchment Numbers
0.000	0.000	0.000	0.081	0.000	0.081	>75% Grass cover, Good	1S, 3S, 4S
0.000	0.000	0.000	0.013	0.000	0.013	Biofiltration cell, Good	3S
0.000	0.000	0.000	0.020	0.000	0.020	Bioretention Filter Cell, Good	1S
0.000	0.000	0.000	0.089	0.000	0.089	Gravel surface	5S
0.000	0.000	0.000	0.039	0.000	0.039	Ledge	1S, 3S
0.000	0.000	0.000	0.090	0.000	0.090	Paved Access Drive	1S
0.000	0.000	0.000	0.038	0.000	0.038	Paved acccess drive	5S
0.000	0.000	0.000	0.093	0.000	0.093	Paved access drive	3S, 4S
0.000	0.000	0.000	0.028	0.000	0.028	Paved parking	2S
0.000	0.000	0.000	0.017	0.000	0.017	Roofs	5S
0.000	0.000	0.000	0.160	0.000	0.160	Sand beach	5S
0.000	0.000	0.000	0.362	0.000	0.362	Woods, Fair	4S
0.000	0.000	0.000	1.526	0.000	1.526	Woods, Good	1S, 2S, 3S, 5S
0.000	**0.000**	**0.000**	**2.557**	**0.000**	**2.557**	**TOTAL AREA**	

Pipe Listing (all nodes)

Line#	Node Number	In-Invert (feet)	Out-Invert (feet)	Length (feet)	Slope (ft/ft)	n	Width (inches)	Diam/Height (inches)	Inside-Fill (inches)	Node Name
1	2P	13.75	12.00	48.0	0.0365	0.013	0.0	15.0	0.0	
2	4P	18.75	18.00	40.0	0.0187	0.013	0.0	18.0	0.0	

Time span=5.00-20.00 hrs, dt=0.05 hrs, 301 points
Runoff by SCS TR-20 method, UH=SCS, Weighted-CN
Reach routing by Stor-Ind method - Pond routing by Stor-Ind method

Subcatchment 1S: Post Subcatchment 1 Runoff Area=9,832 sf 50.01% Impervious Runoff Depth>1.88"
Flow Length=172' Tc=0.8 min CN=87 Runoff=0.59 cfs 0.035 af

Subcatchment 2S: Post Subcatchment 2 Runoff Area=11,488 sf 10.78% Impervious Runoff Depth>1.30"
Flow Length=133' Tc=3.4 min CN=79 Runoff=0.46 cfs 0.029 af

Subcatchment 3S: Post Subcatchment 3 Runoff Area=13,365 sf 33.49% Impervious Runoff Depth>1.65"
Flow Length=262' Tc=4.9 min CN=84 Runoff=0.64 cfs 0.042 af

Subcatchment 4S: Post Subcatchment 4 Runoff Area=17,529 sf 1.68% Impervious Runoff Depth>1.30"
Flow Length=126' Tc=7.2 min CN=79 Runoff=0.62 cfs 0.044 af

Subcatchment 5S: Post Subcatchment 5 Runoff Area=59,179 sf 4.06% Impervious Runoff Depth>1.37"
Flow Length=445' Tc=7.0 min CN=80 Runoff=2.23 cfs 0.155 af

Reach 1R: Reach 1 Inflow=0.58 cfs 0.034 af
Outflow=0.58 cfs 0.034 af

Reach 2R: Reach 2 Inflow=0.61 cfs 0.038 af
Outflow=0.61 cfs 0.038 af

Reach DP3: Shoreline 3 Inflow=2.23 cfs 0.155 af
Outflow=2.23 cfs 0.155 af

Reach SP1: SACO RIVER / OCEAN Inflow=4.22 cfs 0.300 af
Outflow=4.22 cfs 0.300 af

Pond 1P: Bioretention Filter Cell 1 Peak Elev=18.11' Storage=79 cf Inflow=0.59 cfs 0.035 af
Outflow=0.58 cfs 0.034 af

Pond 2P: CB-1 Peak Elev=14.15' Inflow=0.58 cfs 0.034 af
15.0" Round Culvert n=0.013 L=48.0' S=0.0365 '/' Outflow=0.58 cfs 0.034 af

Pond 3P: Bioretention Filter Cell 2 Peak Elev=23.62' Storage=64 cf Inflow=0.64 cfs 0.042 af
Outflow=0.64 cfs 0.041 af

Pond 4P: CB-2 Peak Elev=19.15' Inflow=0.64 cfs 0.041 af
18.0" Round Culvert n=0.013 L=40.0' S=0.0187 '/' Outflow=0.64 cfs 0.041 af

Pond 5P: Level Lip Speader Peak Elev=18.00' Storage=115 cf Inflow=0.64 cfs 0.041 af
Outflow=0.61 cfs 0.038 af

Link DP1: DP1 Inflow=1.02 cfs 0.063 af
Primary=1.02 cfs 0.063 af

Link DP2: DP2 Inflow=1.24 cfs 0.082 af
Primary=1.24 cfs 0.082 af

Total Runoff Area = 2.557 ac Runoff Volume = 0.305 af Average Runoff Depth = 1.43"
88.04% Pervious = 2.251 ac 11.96% Impervious = 0.306 ac

Summary for Subcatchment 1S: Post Subcatchment 1

Runoff = 0.59 cfs @ 12.01 hrs, Volume= 0.035 af, Depth> 1.88"
Routed to Pond 1P : Bioretention Filter Cell 1

Runoff by SCS TR-20 method, UH=SCS, Weighted-CN, Time Span= 5.00-20.00 hrs, dt= 0.05 hrs
Type III 24-hr 2-yr Rainfall=3.30"

	Area (sf)	CN	Description
	3,430	77	Woods, Good, HSG D
*	982	98	Ledge, HSG D
	595	80	>75% Grass cover, Good, HSG D
*	3,935	98	Paved Access Drive, HSG D
*	890	73	Bioretention Filter Cell, Good, HSG D
	9,832	87	Weighted Average
	4,915		49.99% Pervious Area
	4,917		50.01% Impervious Area

Tc (min)	Length (feet)	Slope (ft/ft)	Velocity (ft/sec)	Capacity (cfs)	Description
0.4	46	0.0500	1.73		**Sheet Flow, Tc-1** Smooth surfaces n= 0.011 P2= 3.30"
0.3	102	0.0500	5.25	15.74	**Channel Flow, Tc-2** Area= 3.0 sf Perim= 9.2' r= 0.33' n= 0.030 Earth, grassed & winding
0.1	24	0.0625	3.75		**Shallow Concentrated Flow, Tc-3** Grassed Waterway Kv= 15.0 fps
0.8	172	Total			

Subcatchment 1S: Post Subcatchment 1

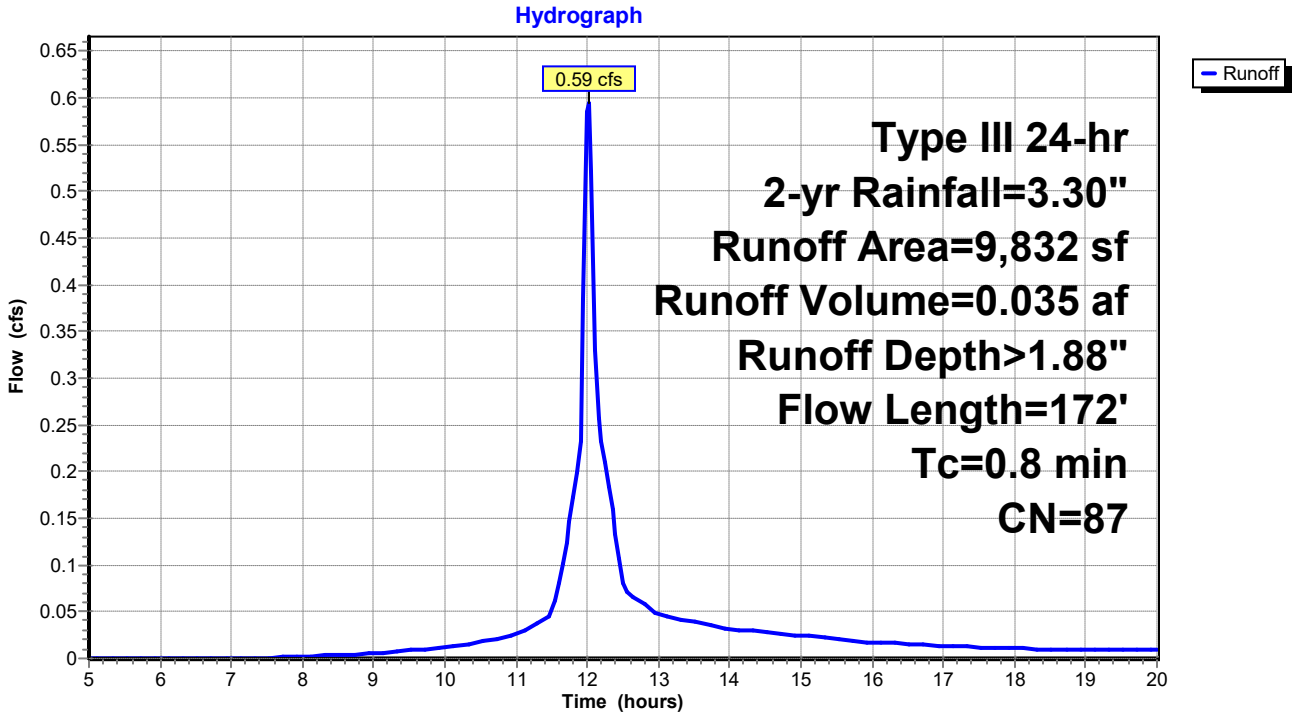

Summary for Subcatchment 2S: Post Subcatchment 2

Runoff = 0.46 cfs @ 12.06 hrs, Volume= 0.029 af, Depth> 1.30"
Routed to Link DP1 : DP1

Runoff by SCS TR-20 method, UH=SCS, Weighted-CN, Time Span= 5.00-20.00 hrs, dt= 0.05 hrs
Type III 24-hr 2-yr Rainfall=3.30"

Area (sf)	CN	Description
10,250	77	Woods, Good, HSG D
1,238	98	Paved parking, HSG D
11,488	79	Weighted Average
10,250		89.22% Pervious Area
1,238		10.78% Impervious Area

Tc (min)	Length (feet)	Slope (ft/ft)	Velocity (ft/sec)	Capacity (cfs)	Description
2.5	21	0.1905	0.14		**Sheet Flow, Tc-1** Woods: Light underbrush n= 0.400 P2= 3.30"
0.9	112	0.1696	2.06		**Shallow Concentrated Flow, Tc-2** Woodland Kv= 5.0 fps
3.4	133	Total			

Subcatchment 2S: Post Subcatchment 2

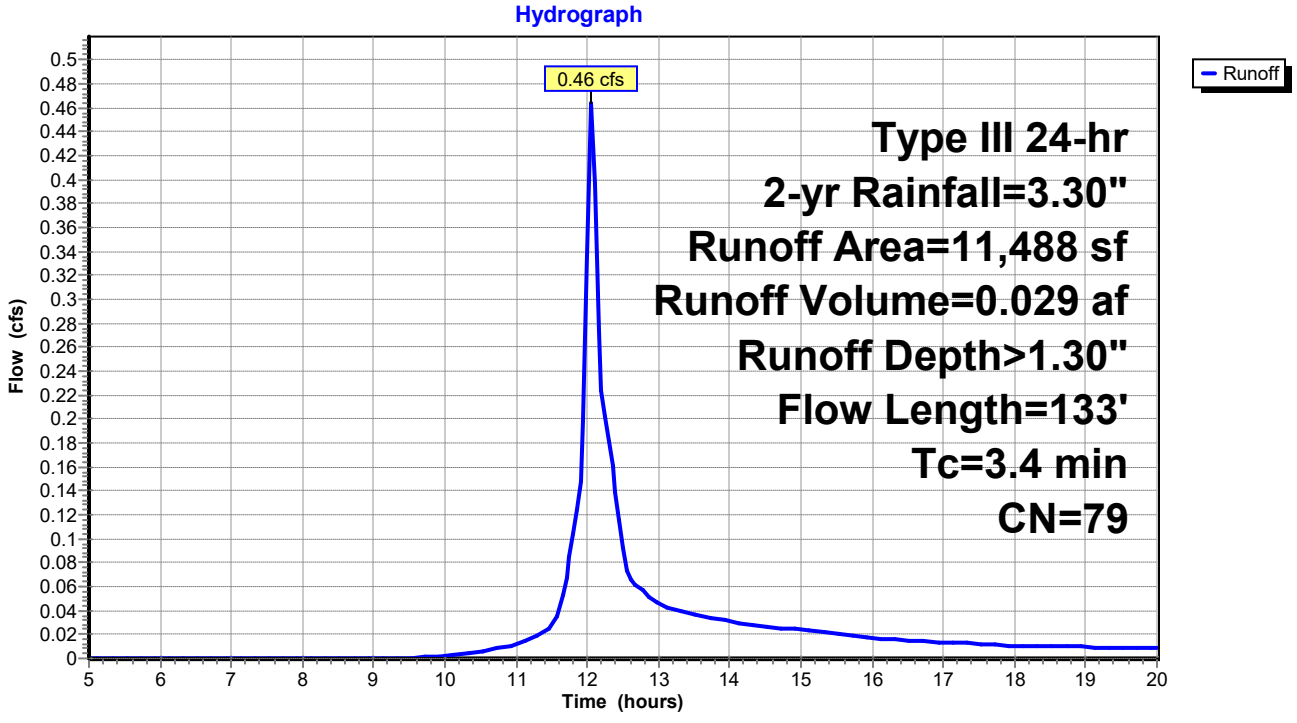

Summary for Subcatchment 3S: Post Subcatchment 3

Runoff = 0.64 cfs @ 12.08 hrs, Volume= 0.042 af, Depth> 1.65"
Routed to Pond 3P : Bioretention Filter Cell 2

Runoff by SCS TR-20 method, UH=SCS, Weighted-CN, Time Span= 5.00-20.00 hrs, dt= 0.05 hrs
Type III 24-hr 2-yr Rainfall=3.30"

	Area (sf)	CN	Description
	6,822	77	Woods, Good, HSG D
*	580	73	Biofiltration cell, Good, HSG D
*	3,768	98	Paved access drive, HSG D
	1,487	80	>75% Grass cover, Good, HSG D
*	708	98	Ledge, HSG D
	13,365	84	Weighted Average
	8,889		66.51% Pervious Area
	4,476		33.49% Impervious Area

Tc (min)	Length (feet)	Slope (ft/ft)	Velocity (ft/sec)	Capacity (cfs)	Description
4.2	43	0.2093	0.17		**Sheet Flow, Tc-1** Woods: Light underbrush n= 0.400 P2= 3.30"
0.7	214	0.0500	5.25	15.74	**Channel Flow, Tc-2** Area= 3.0 sf Perim= 9.2' r= 0.33' n= 0.030 Earth, grassed & winding
0.0	5	0.0500	3.35		**Shallow Concentrated Flow, Tc-3** Grassed Waterway Kv= 15.0 fps
4.9	262	Total			

Subcatchment 3S: Post Subcatchment 3

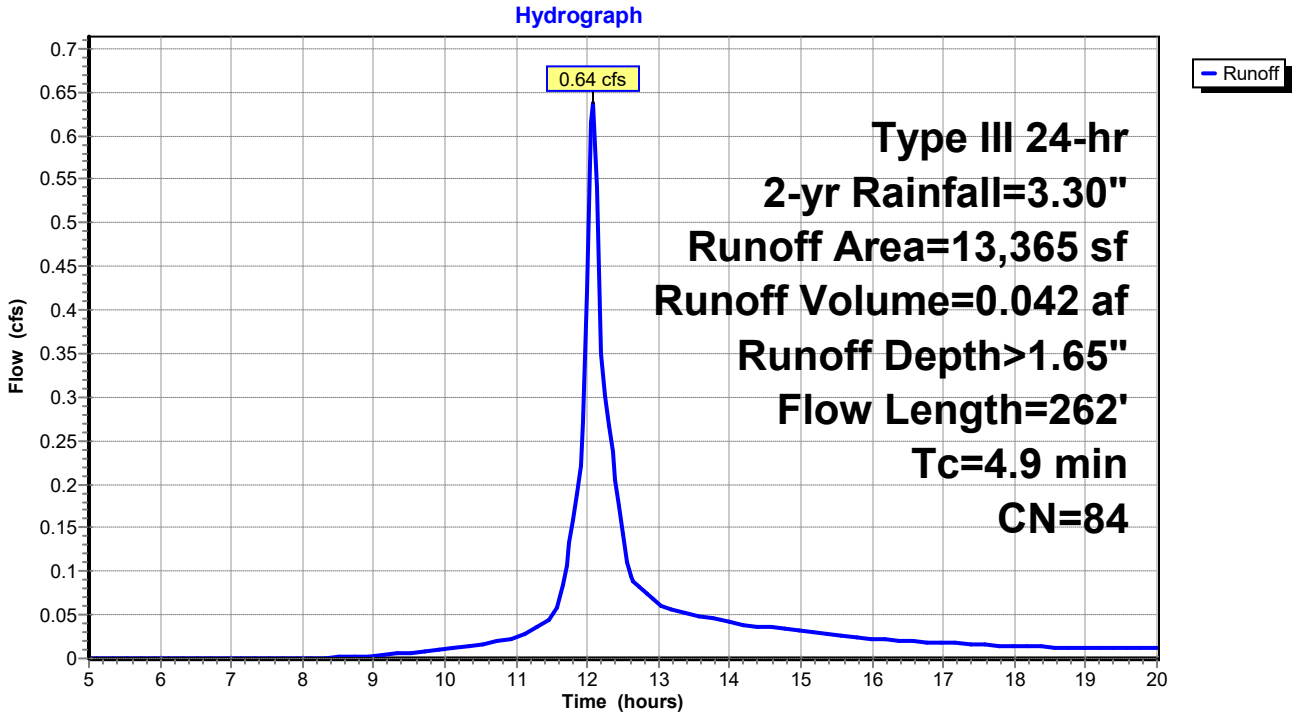

Summary for Subcatchment 4S: Post Subcatchment 4

Runoff = 0.62 cfs @ 12.11 hrs, Volume= 0.044 af, Depth> 1.30"
Routed to Link DP2 : DP2

Runoff by SCS TR-20 method, UH=SCS, Weighted-CN, Time Span= 5.00-20.00 hrs, dt= 0.05 hrs
Type III 24-hr 2-yr Rainfall=3.30"

	Area (sf)	CN	Description
*	295	98	Paved access drive, HSG D
	1,450	80	>75% Grass cover, Good, HSG D
	15,784	79	Woods, Fair, HSG D
	17,529	79	Weighted Average
	17,234		98.32% Pervious Area
	295		1.68% Impervious Area

Tc (min)	Length (feet)	Slope (ft/ft)	Velocity (ft/sec)	Capacity (cfs)	Description
6.8	62	0.1290	0.15		**Sheet Flow, Tc-1** Woods: Light underbrush n= 0.400 P2= 3.30"
0.4	64	0.2343	2.42		**Shallow Concentrated Flow, Tc-2** Woodland Kv= 5.0 fps
7.2	126	Total			

Subcatchment 4S: Post Subcatchment 4

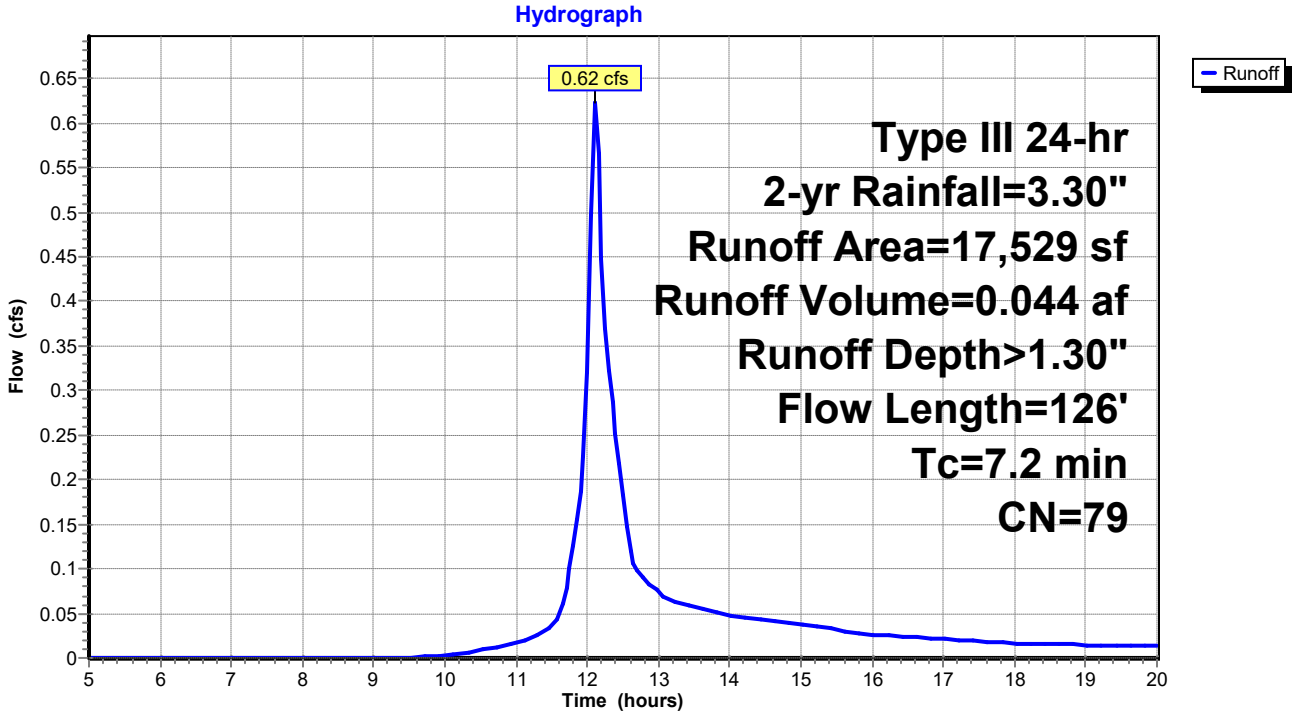

Summary for Subcatchment 5S: Post Subcatchment 5

Runoff = 2.23 cfs @ 12.11 hrs, Volume= 0.155 af, Depth> 1.37"
Routed to Reach DP3 : Shoreline 3

Runoff by SCS TR-20 method, UH=SCS, Weighted-CN, Time Span= 5.00-20.00 hrs, dt= 0.05 hrs
Type III 24-hr 2-yr Rainfall=3.30"

	Area (sf)	CN	Description
*	1,650	98	Paved acccess drive, HSG D
	751	98	Roofs, HSG D
*	6,955	88	Sand beach, HSG D
	3,872	96	Gravel surface, HSG D
	45,951	77	Woods, Good, HSG D
	59,179	80	Weighted Average
	56,778		95.94% Pervious Area
	2,401		4.06% Impervious Area

Tc (min)	Length (feet)	Slope (ft/ft)	Velocity (ft/sec)	Capacity (cfs)	Description
2.7	23	0.1740	0.14		**Sheet Flow, Tc-1** Woods: Light underbrush n= 0.400 P2= 3.30"
1.0	70	0.0574	1.20		**Shallow Concentrated Flow, Tc-2** Woodland Kv= 5.0 fps
0.5	170	0.1059	5.24		**Shallow Concentrated Flow, Tc-3** Unpaved Kv= 16.1 fps
2.5	140	0.0357	0.94		**Shallow Concentrated Flow, Tc-4** Woodland Kv= 5.0 fps
0.3	42	0.0714	2.67		**Shallow Concentrated Flow, Tc-5** Nearly Bare & Untilled Kv= 10.0 fps
7.0	445	Total			

Subcatchment 5S: Post Subcatchment 5

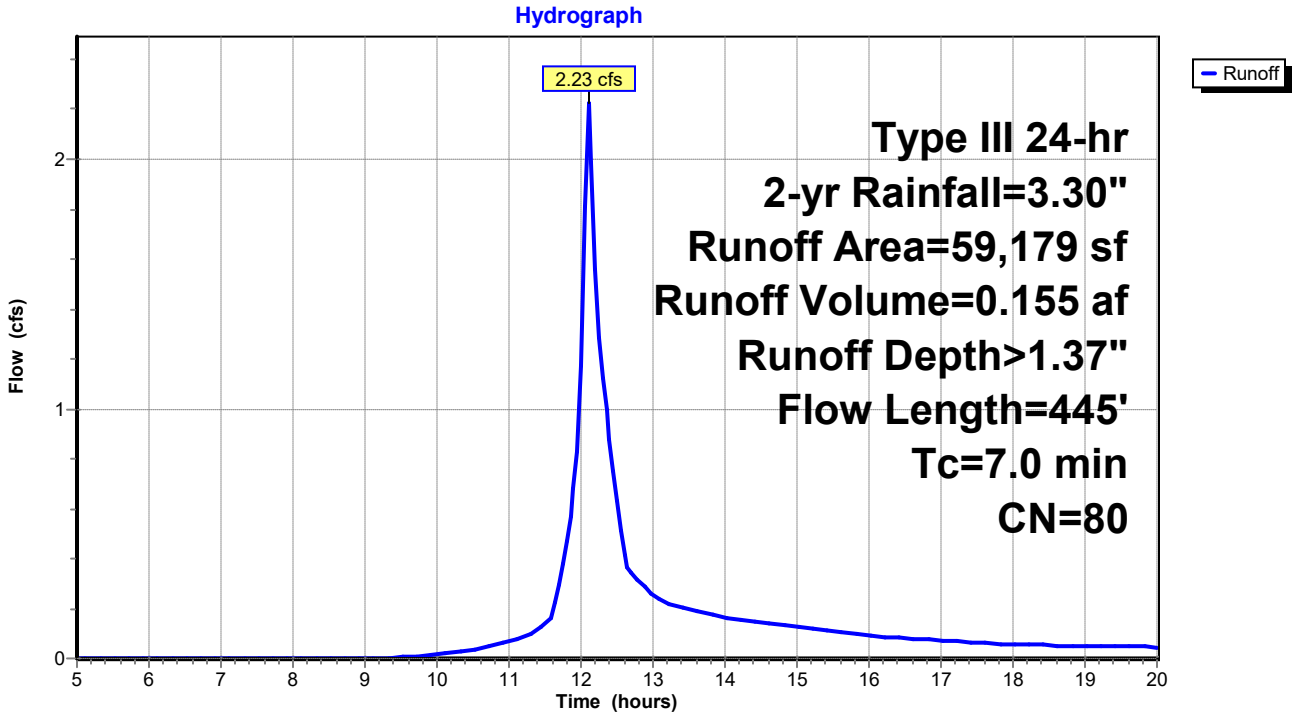

Summary for Reach 1R: Reach 1

Inflow Area = 0.226 ac, 50.01% Impervious, Inflow Depth > 1.81" for 2-yr event
Inflow = 0.58 cfs @ 12.03 hrs, Volume= 0.034 af
Outflow = 0.58 cfs @ 12.03 hrs, Volume= 0.034 af, Atten= 0%, Lag= 0.0 min
Routed to Link DP1 : DP1

Routing by Stor-Ind method, Time Span= 5.00-20.00 hrs, dt= 0.05 hrs

Reach 1R: Reach 1

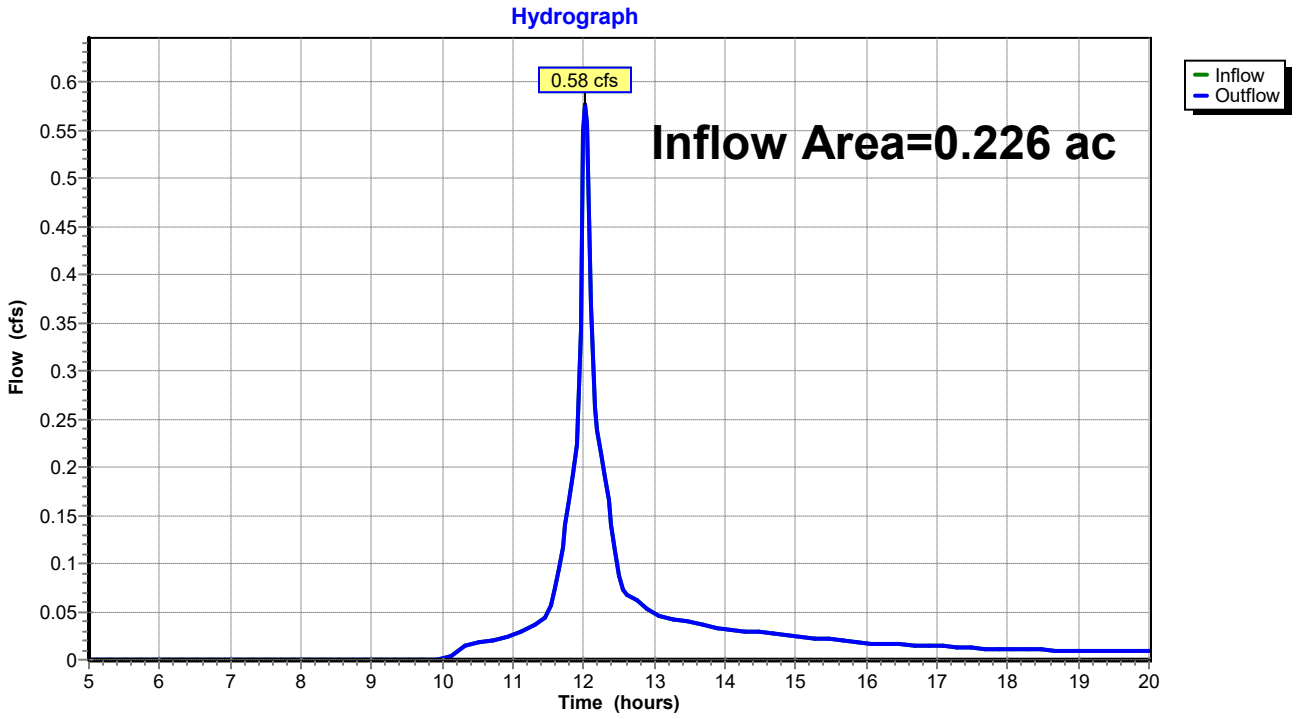

Summary for Reach 2R: Reach 2

Inflow Area = 0.307 ac, 33.49% Impervious, Inflow Depth > 1.50" for 2-yr event
Inflow = 0.61 cfs @ 12.11 hrs, Volume= 0.038 af
Outflow = 0.61 cfs @ 12.11 hrs, Volume= 0.038 af, Atten= 0%, Lag= 0.0 min
Routed to Link DP2 : DP2

Routing by Stor-Ind method, Time Span= 5.00-20.00 hrs, dt= 0.05 hrs

Reach 2R: Reach 2

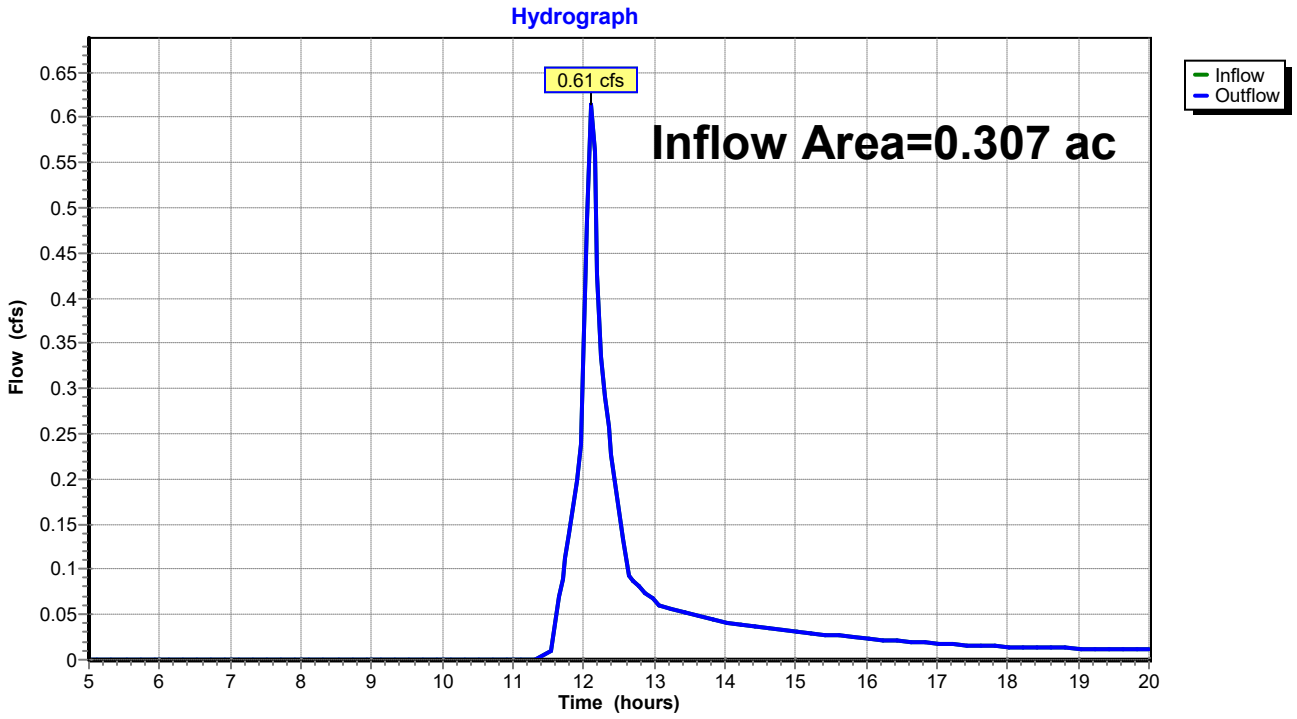

Summary for Reach DP3: Shoreline 3

Inflow Area = 1.359 ac, 4.06% Impervious, Inflow Depth > 1.37" for 2-yr event
Inflow = 2.23 cfs @ 12.11 hrs, Volume= 0.155 af
Outflow = 2.23 cfs @ 12.11 hrs, Volume= 0.155 af, Atten= 0%, Lag= 0.0 min
Routed to Reach SP1 : SACO RIVER / OCEAN

Routing by Stor-Ind method, Time Span= 5.00-20.00 hrs, dt= 0.05 hrs

Reach DP3: Shoreline 3

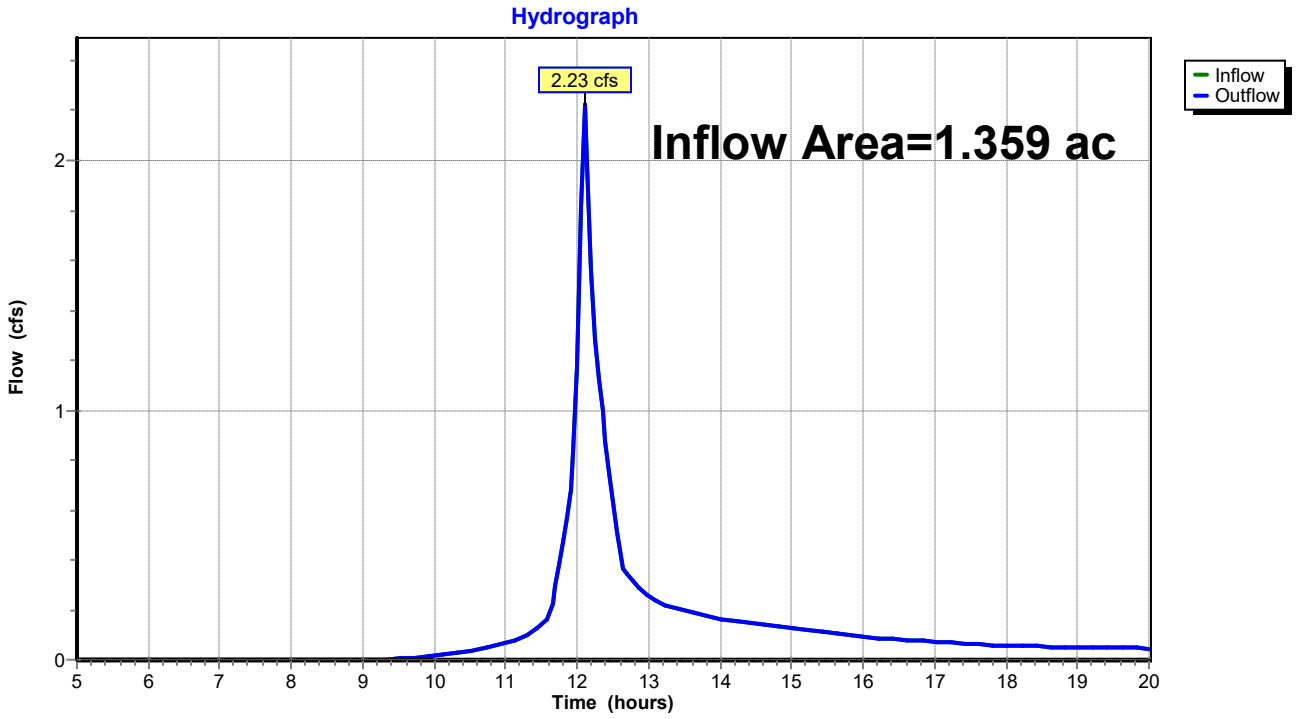

Summary for Reach SP1: SACO RIVER / OCEAN

Inflow Area = 2.557 ac, 11.96% Impervious, Inflow Depth > 1.41" for 2-yr event
Inflow = 4.22 cfs @ 12.10 hrs, Volume= 0.300 af
Outflow = 4.22 cfs @ 12.10 hrs, Volume= 0.300 af, Atten= 0%, Lag= 0.0 min

Routing by Stor-Ind method, Time Span= 5.00-20.00 hrs, dt= 0.05 hrs

Reach SP1: SACO RIVER / OCEAN

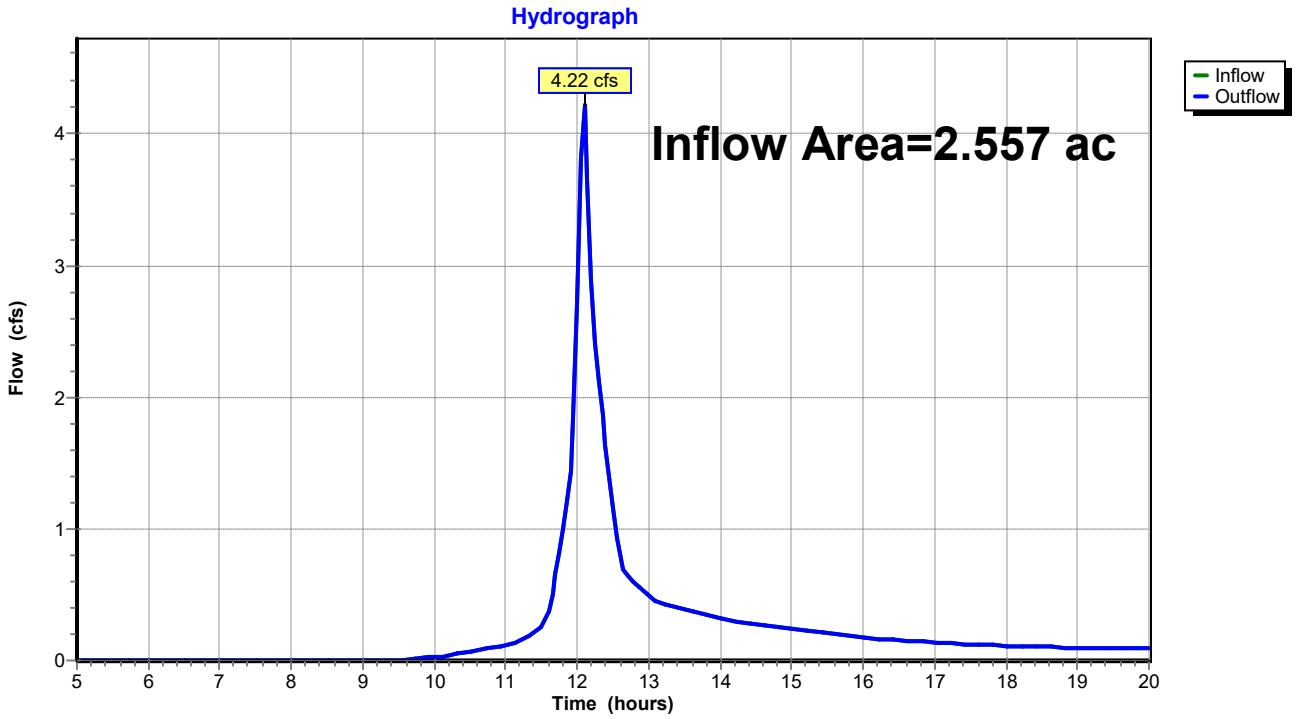

Summary for Pond 1P: Bioretention Filter Cell 1

Inflow Area = 0.226 ac, 50.01% Impervious, Inflow Depth > 1.88" for 2-yr event
Inflow = 0.59 cfs @ 12.01 hrs, Volume= 0.035 af
Outflow = 0.58 cfs @ 12.03 hrs, Volume= 0.034 af, Atten= 3%, Lag= 0.8 min
Primary = 0.58 cfs @ 12.03 hrs, Volume= 0.034 af
Routed to Pond 2P : CB-1

Routing by Stor-Ind method, Time Span= 5.00-20.00 hrs, dt= 0.05 hrs
Peak Elev= 18.11' @ 12.03 hrs Surf.Area= 249 sf Storage= 79 cf

Plug-Flow detention time= 22.5 min calculated for 0.034 af (96% of inflow)
Center-of-Mass det. time= 9.1 min (788.5 - 779.4)

Volume	Invert	Avail.Storage	Storage Description
#1	17.50'	200 cf	**Custom Stage Data (Prismatic)** Listed below (Recalc)

Elevation (feet)	Surf.Area (sq-ft)	Inc.Store (cubic-feet)	Cum.Store (cubic-feet)
17.50	0	0	0
18.00	213	53	53
18.50	372	146	200

Device	Routing	Invert	Outlet Devices
#1	Primary	18.00'	**18.0" Horiz. Orifice/Grate** C= 0.600 in 24.0" Grate (56% open area) Limited to weir flow at low heads

Primary OutFlow Max=0.55 cfs @ 12.03 hrs HW=18.11' (Free Discharge)
↑—**1=Orifice/Grate** (Weir Controls 0.55 cfs @ 1.08 fps)

Pond 1P: Bioretention Filter Cell 1

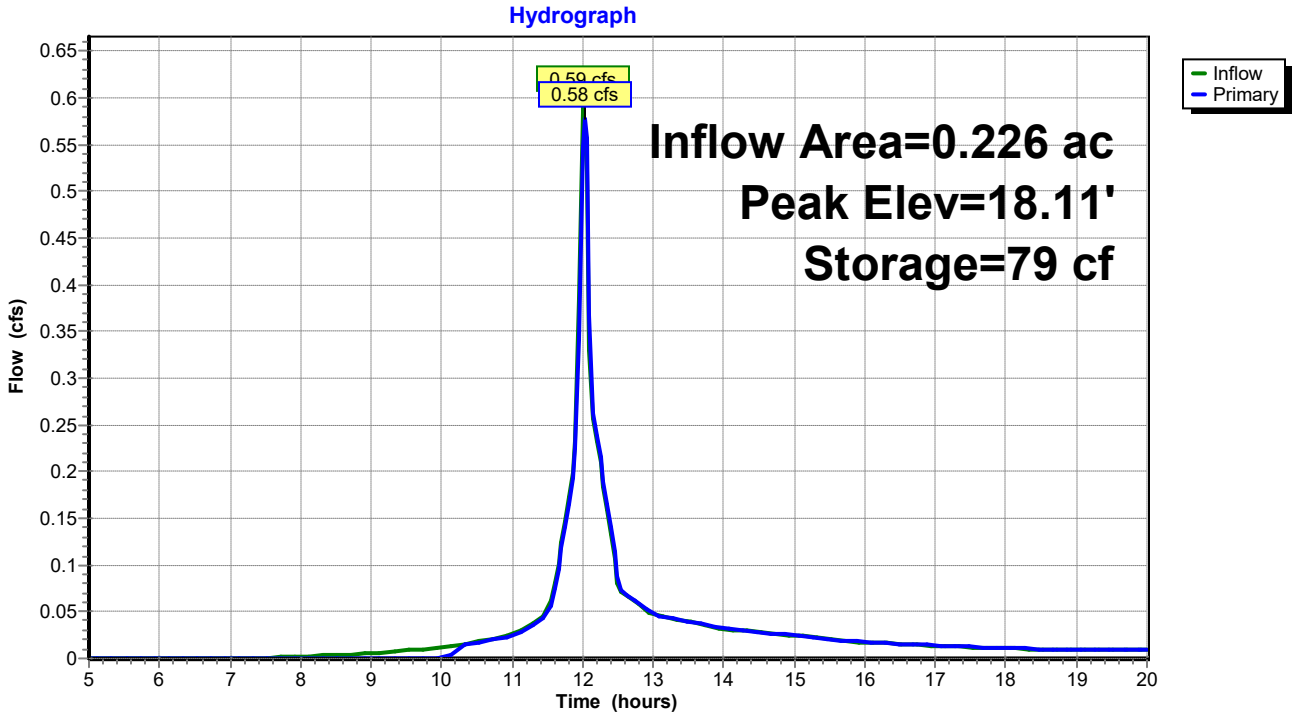

Summary for Pond 2P: CB-1

Inflow Area = 0.226 ac, 50.01% Impervious, Inflow Depth > 1.81" for 2-yr event
Inflow = 0.58 cfs @ 12.03 hrs, Volume= 0.034 af
Outflow = 0.58 cfs @ 12.03 hrs, Volume= 0.034 af, Atten= 0%, Lag= 0.0 min
Primary = 0.58 cfs @ 12.03 hrs, Volume= 0.034 af
Routed to Reach 1R : Reach 1

Routing by Stor-Ind method, Time Span= 5.00-20.00 hrs, dt= 0.05 hrs
Peak Elev= 14.15' @ 12.03 hrs

Device	Routing	Invert	Outlet Devices
#1	Primary	13.75'	**15.0" Round Culvert** L= 48.0' CPP, projecting, no headwall, Ke= 0.900 Inlet / Outlet Invert= 13.75' / 12.00' S= 0.0365 '/' Cc= 0.900 n= 0.013 Corrugated PE, smooth interior, Flow Area= 1.23 sf

Primary OutFlow Max=0.55 cfs @ 12.03 hrs HW=14.14' (Free Discharge)
1=Culvert (Inlet Controls 0.55 cfs @ 1.68 fps)

Pond 2P: CB-1

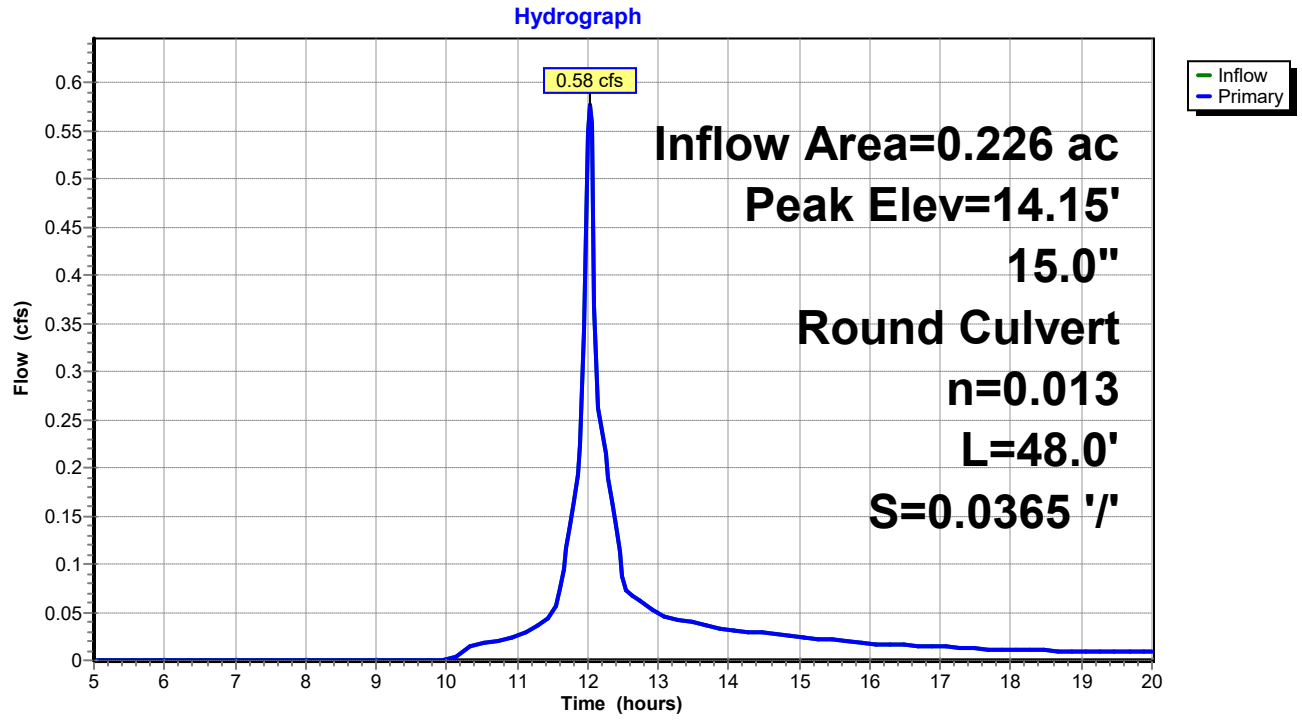

Summary for Pond 3P: Bioretention Filter Cell 2

Inflow Area = 0.307 ac, 33.49% Impervious, Inflow Depth > 1.65" for 2-yr event
Inflow = 0.64 cfs @ 12.08 hrs, Volume= 0.042 af
Outflow = 0.64 cfs @ 12.09 hrs, Volume= 0.041 af, Atten= 0%, Lag= 0.7 min
Primary = 0.64 cfs @ 12.09 hrs, Volume= 0.041 af
Routed to Pond 4P : CB-2

Routing by Stor-Ind method, Time Span= 5.00-20.00 hrs, dt= 0.05 hrs
Peak Elev= 23.62' @ 12.09 hrs Surf.Area= 208 sf Storage= 64 cf

Plug-Flow detention time= 14.5 min calculated for 0.041 af (97% of inflow)
Center-of-Mass det. time= 5.7 min (797.0 - 791.3)

Volume	Invert	Avail.Storage	Storage Description
#1	23.00'	380 cf	**Custom Stage Data (Prismatic)** Listed below (Recalc)

Elevation (feet)	Surf.Area (sq-ft)	Inc.Store (cubic-feet)	Cum.Store (cubic-feet)
23.00	0	0	0
24.00	335	168	168
24.50	515	213	380

Device	Routing	Invert	Outlet Devices
#1	Primary	23.50'	**18.0" Horiz. Orifice/Grate** C= 0.600 in 24.0" Grate (56% open area) Limited to weir flow at low heads

Primary OutFlow Max=0.62 cfs @ 12.09 hrs HW=23.62' (Free Discharge)
↑**1=Orifice/Grate** (Weir Controls 0.62 cfs @ 1.12 fps)

Pond 3P: Bioretention Filter Cell 2

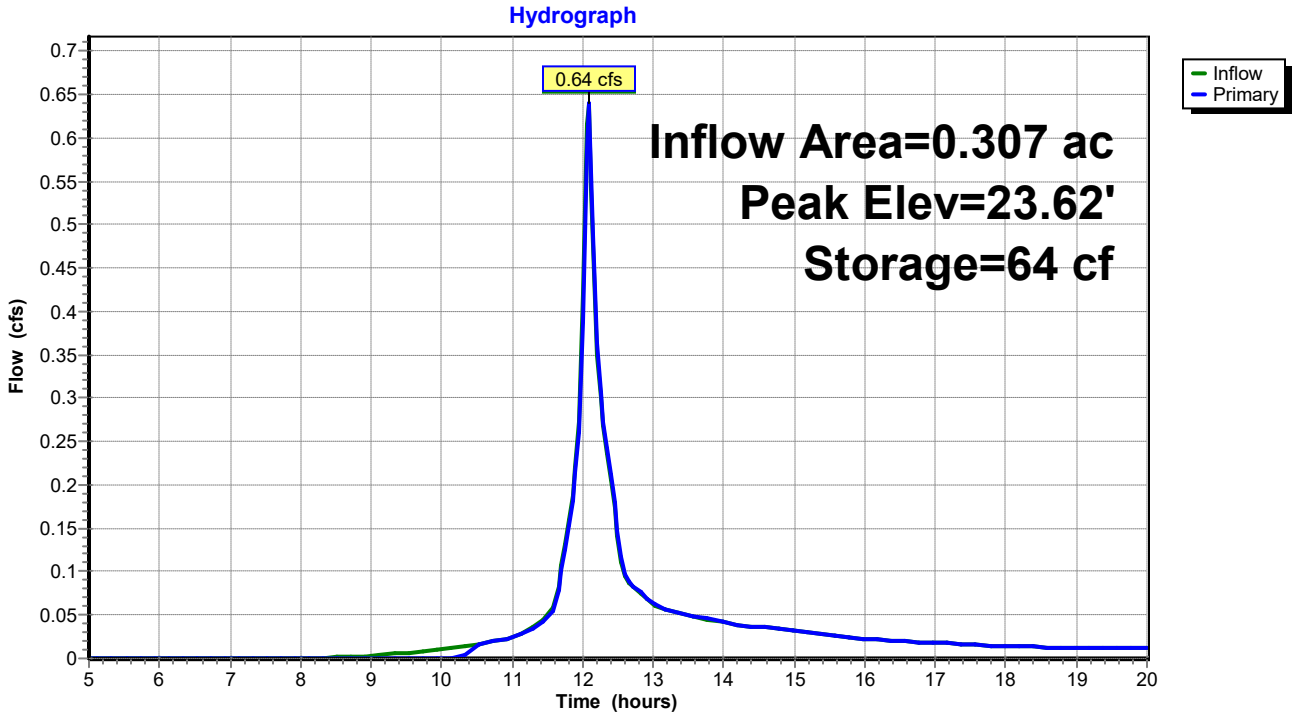

Summary for Pond 4P: CB-2

Inflow Area = 0.307 ac, 33.49% Impervious, Inflow Depth > 1.61" for 2-yr event
Inflow = 0.64 cfs @ 12.09 hrs, Volume= 0.041 af
Outflow = 0.64 cfs @ 12.09 hrs, Volume= 0.041 af, Atten= 0%, Lag= 0.0 min
Primary = 0.64 cfs @ 12.09 hrs, Volume= 0.041 af
Routed to Pond 5P : Level Lip Speader

Routing by Stor-Ind method, Time Span= 5.00-20.00 hrs, dt= 0.05 hrs
Peak Elev= 19.15' @ 12.09 hrs

Device	Routing	Invert	Outlet Devices
#1	Primary	18.75'	**18.0" Round Culvert** L= 40.0' CPP, projecting, no headwall, Ke= 0.900 Inlet / Outlet Invert= 18.75' / 18.00' S= 0.0187 '/' Cc= 0.900 n= 0.013 Corrugated PE, smooth interior, Flow Area= 1.77 sf

Primary OutFlow Max=0.62 cfs @ 12.09 hrs HW=19.14' (Free Discharge)
1=Culvert (Inlet Controls 0.62 cfs @ 1.69 fps)

Pond 4P: CB-2

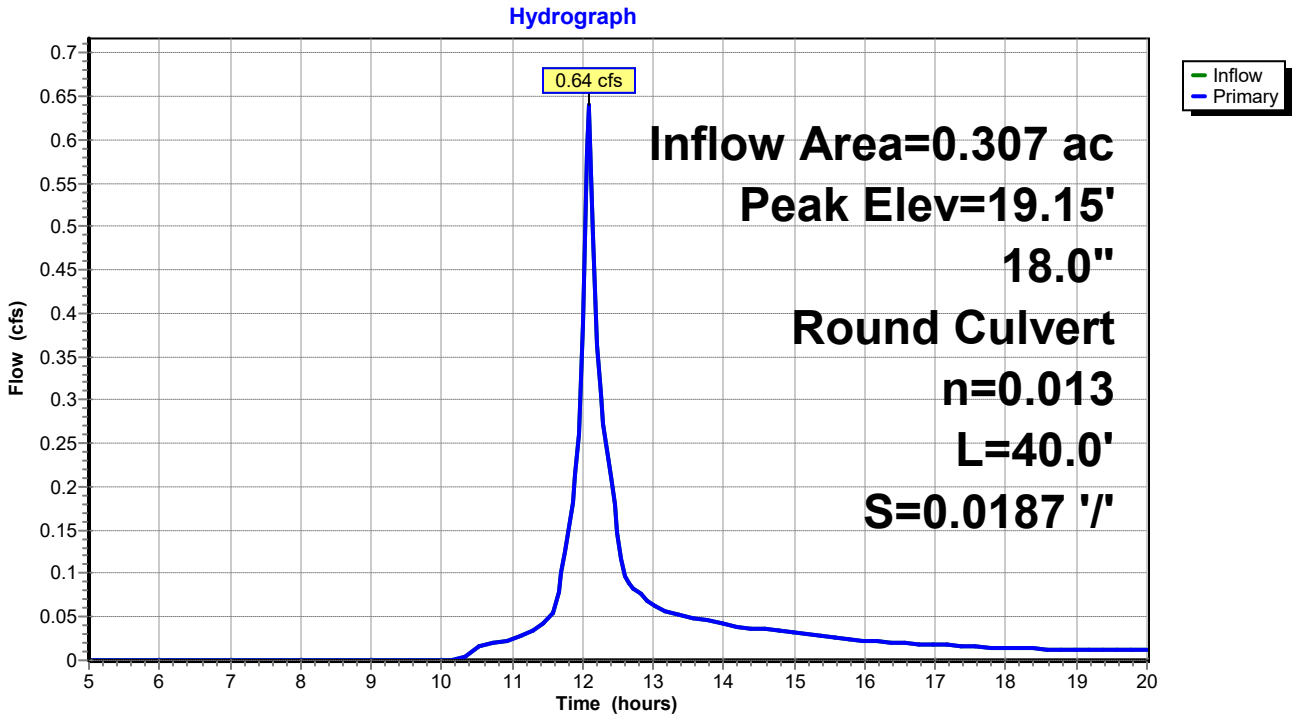

Summary for Pond 5P: Level Lip Speader

Inflow Area = 0.307 ac, 33.49% Impervious, Inflow Depth > 1.61" for 2-yr event
Inflow = 0.64 cfs @ 12.09 hrs, Volume= 0.041 af
Outflow = 0.61 cfs @ 12.11 hrs, Volume= 0.038 af, Atten= 4%, Lag= 1.4 min
Primary = 0.61 cfs @ 12.11 hrs, Volume= 0.038 af
Routed to Reach 2R : Reach 2

Routing by Stor-Ind method, Time Span= 5.00-20.00 hrs, dt= 0.05 hrs
Peak Elev= 18.00' @ 11.60 hrs Surf.Area= 168 sf Storage= 115 cf
Flood Elev= 20.00' Surf.Area= 168 sf Storage= 115 cf

Plug-Flow detention time= 32.2 min calculated for 0.038 af (93% of inflow)
Center-of-Mass det. time= 10.2 min (807.2 - 797.0)

Volume	Invert	Avail.Storage	Storage Description
#1	17.00'	115 cf	**Custom Stage Data (Prismatic)** Listed below (Recalc)

Elevation (feet)	Surf.Area (sq-ft)	Voids (%)	Inc.Store (cubic-feet)	Cum.Store (cubic-feet)
17.00	61	0.0	0	0
18.00	168	100.0	115	115

Device	Routing	Invert	Outlet Devices
#0	Primary	18.00'	**Automatic Storage Overflow** (Discharged without head)

Primary OutFlow Max=0.00 cfs @ 12.11 hrs HW=18.00' (Free Discharge)

Pond 5P: Level Lip Speader

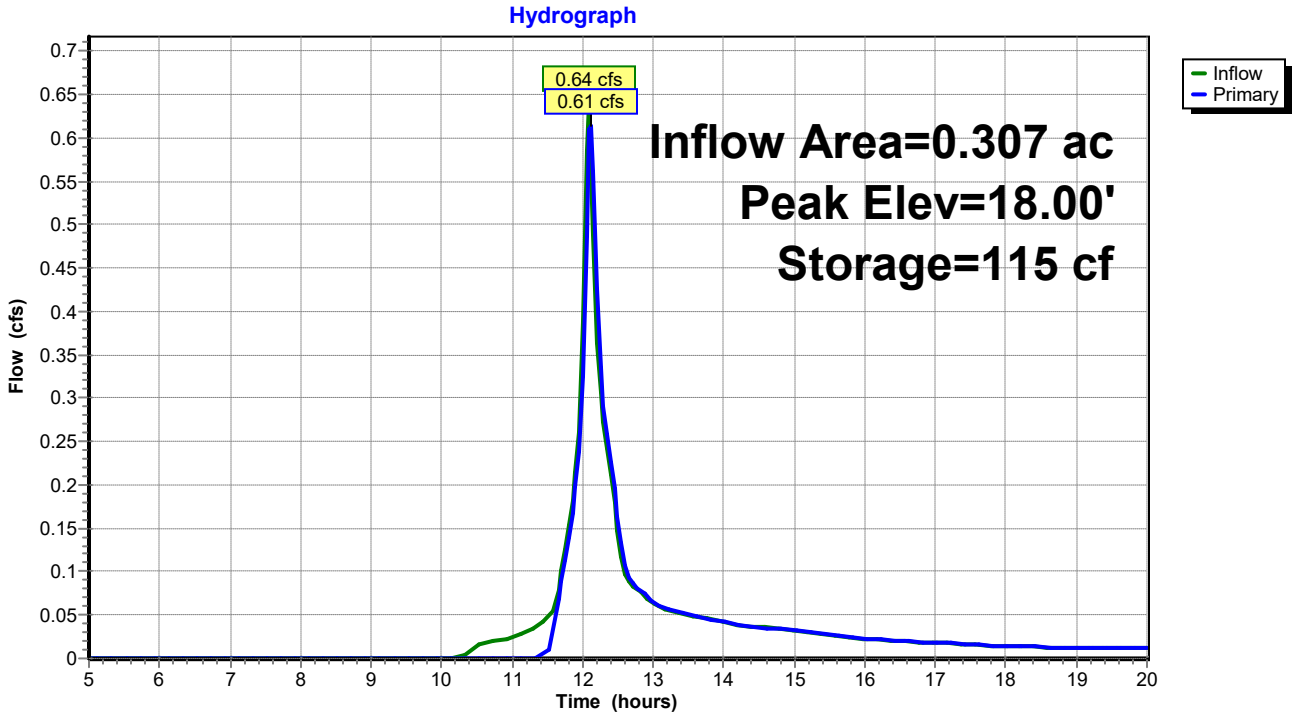

Summary for Link DP1: DP1

Inflow Area = 0.489 ac, 28.87% Impervious, Inflow Depth > 1.54" for 2-yr event
Inflow = 1.02 cfs @ 12.04 hrs, Volume= 0.063 af
Primary = 1.02 cfs @ 12.04 hrs, Volume= 0.063 af, Atten= 0%, Lag= 0.0 min
Routed to Reach SP1 : SACO RIVER / OCEAN

Primary outflow = Inflow, Time Span= 5.00-20.00 hrs, dt= 0.05 hrs

Link DP1: DP1

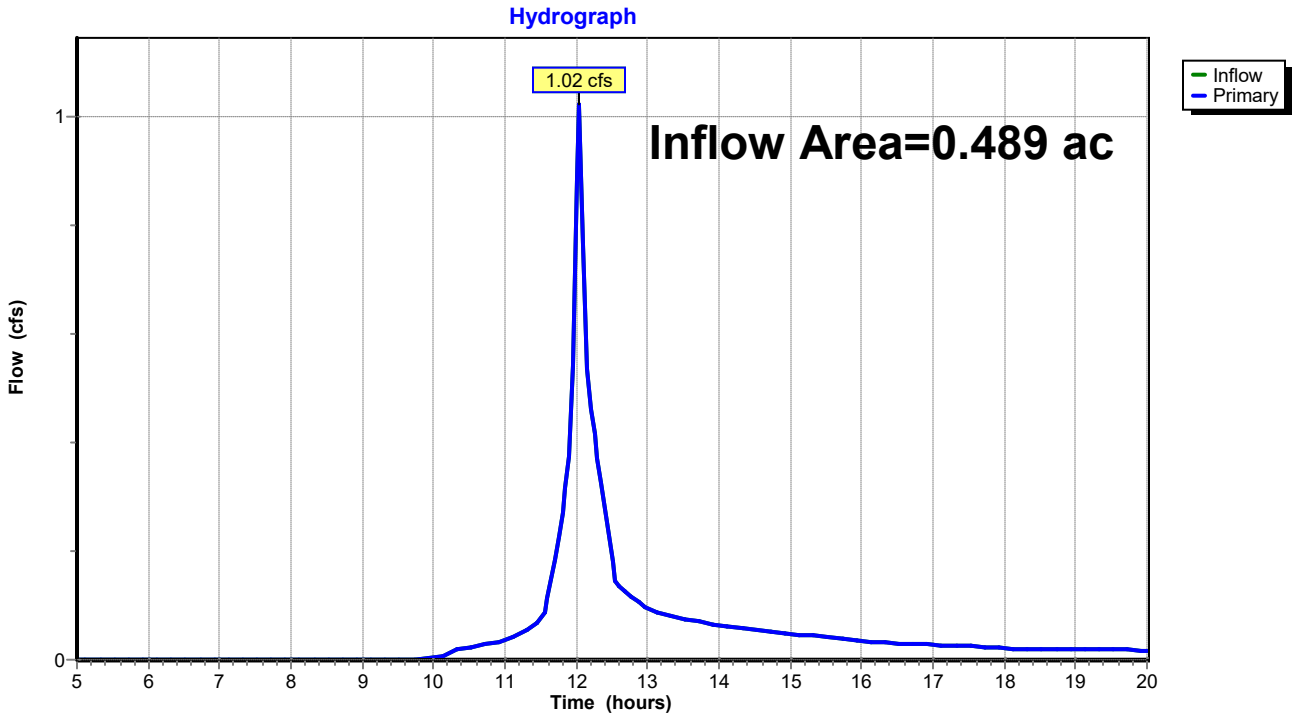

Summary for Link DP2: DP2

Inflow Area = 0.709 ac, 15.44% Impervious, Inflow Depth > 1.39" for 2-yr event
Inflow = 1.24 cfs @ 12.11 hrs, Volume= 0.082 af
Primary = 1.24 cfs @ 12.11 hrs, Volume= 0.082 af, Atten= 0%, Lag= 0.0 min
Routed to Reach SP1 : SACO RIVER / OCEAN

Primary outflow = Inflow, Time Span= 5.00-20.00 hrs, dt= 0.05 hrs

Link DP2: DP2

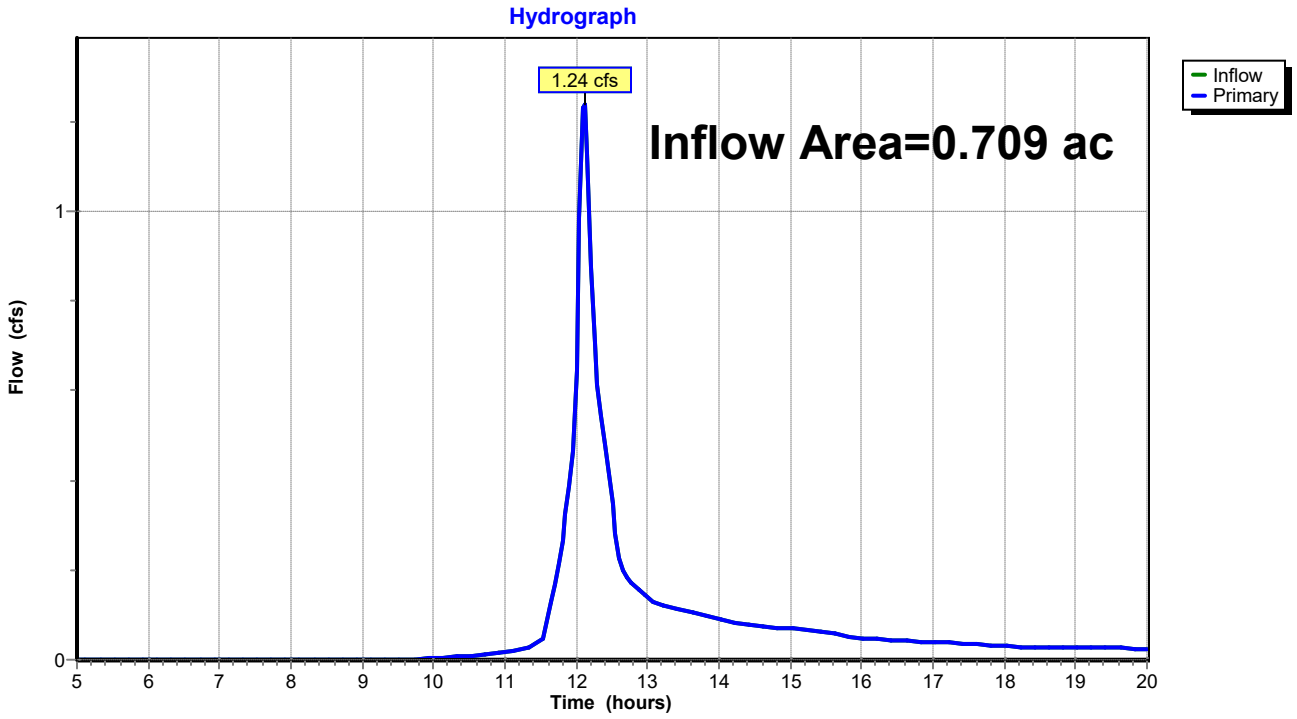

Time span=5.00-20.00 hrs, dt=0.05 hrs, 301 points
Runoff by SCS TR-20 method, UH=SCS, Weighted-CN
Reach routing by Stor-Ind method - Pond routing by Stor-Ind method

Subcatchment 1S: Post Subcatchment 1 Runoff Area=9,832 sf 50.01% Impervious Runoff Depth>3.28"
Flow Length=172' Tc=0.8 min CN=87 Runoff=1.02 cfs 0.062 af

Subcatchment 2S: Post Subcatchment 2 Runoff Area=11,488 sf 10.78% Impervious Runoff Depth>2.53"
Flow Length=133' Tc=3.4 min CN=79 Runoff=0.90 cfs 0.056 af

Subcatchment 3S: Post Subcatchment 3 Runoff Area=13,365 sf 33.49% Impervious Runoff Depth>2.98"
Flow Length=262' Tc=4.9 min CN=84 Runoff=1.15 cfs 0.076 af

Subcatchment 4S: Post Subcatchment 4 Runoff Area=17,529 sf 1.68% Impervious Runoff Depth>2.53"
Flow Length=126' Tc=7.2 min CN=79 Runoff=1.21 cfs 0.085 af

Subcatchment 5S: Post Subcatchment 5 Runoff Area=59,179 sf 4.06% Impervious Runoff Depth>2.62"
Flow Length=445' Tc=7.0 min CN=80 Runoff=4.26 cfs 0.297 af

Reach 1R: Reach 1 Inflow=0.99 cfs 0.060 af
Outflow=0.99 cfs 0.060 af

Reach 2R: Reach 2 Inflow=1.10 cfs 0.073 af
Outflow=1.10 cfs 0.073 af

Reach DP3: Shoreline 3 Inflow=4.26 cfs 0.297 af
Outflow=4.26 cfs 0.297 af

Reach SP1: SACO RIVER / OCEAN Inflow=7.94 cfs 0.570 af
Outflow=7.94 cfs 0.570 af

Pond 1P: Bioretention Filter Cell 1 Peak Elev=18.16' Storage=92 cf Inflow=1.02 cfs 0.062 af
Outflow=0.99 cfs 0.060 af

Pond 2P: CB-1 Peak Elev=14.29' Inflow=0.99 cfs 0.060 af
15.0" Round Culvert n=0.013 L=48.0' S=0.0365 '/' Outflow=0.99 cfs 0.060 af

Pond 3P: Bioretention Filter Cell 2 Peak Elev=23.68' Storage=77 cf Inflow=1.15 cfs 0.076 af
Outflow=1.14 cfs 0.075 af

Pond 4P: CB-2 Peak Elev=19.29' Inflow=1.14 cfs 0.075 af
18.0" Round Culvert n=0.013 L=40.0' S=0.0187 '/' Outflow=1.14 cfs 0.075 af

Pond 5P: Level Lip Speader Peak Elev=18.00' Storage=115 cf Inflow=1.14 cfs 0.075 af
Outflow=1.10 cfs 0.073 af

Link DP1: DP1 Inflow=1.85 cfs 0.116 af
Primary=1.85 cfs 0.116 af

Link DP2: DP2 Inflow=2.31 cfs 0.158 af
Primary=2.31 cfs 0.158 af

Total Runoff Area = 2.557 ac Runoff Volume = 0.575 af Average Runoff Depth = 2.70"
88.04% Pervious = 2.251 ac 11.96% Impervious = 0.306 ac

Summary for Subcatchment 1S: Post Subcatchment 1

Runoff = 1.02 cfs @ 12.01 hrs, Volume= 0.062 af, Depth> 3.28"
Routed to Pond 1P : Bioretention Filter Cell 1

Runoff by SCS TR-20 method, UH=SCS, Weighted-CN, Time Span= 5.00-20.00 hrs, dt= 0.05 hrs
Type III 24-hr 10-yr Rainfall=4.90"

	Area (sf)	CN	Description
	3,430	77	Woods, Good, HSG D
*	982	98	Ledge, HSG D
	595	80	>75% Grass cover, Good, HSG D
*	3,935	98	Paved Access Drive, HSG D
*	890	73	Bioretention Filter Cell, Good, HSG D
	9,832	87	Weighted Average
	4,915		49.99% Pervious Area
	4,917		50.01% Impervious Area

Tc (min)	Length (feet)	Slope (ft/ft)	Velocity (ft/sec)	Capacity (cfs)	Description
0.4	46	0.0500	1.73		**Sheet Flow, Tc-1** Smooth surfaces n= 0.011 P2= 3.30"
0.3	102	0.0500	5.25	15.74	**Channel Flow, Tc-2** Area= 3.0 sf Perim= 9.2' r= 0.33' n= 0.030 Earth, grassed & winding
0.1	24	0.0625	3.75		**Shallow Concentrated Flow, Tc-3** Grassed Waterway Kv= 15.0 fps
0.8	172	Total			

Subcatchment 1S: Post Subcatchment 1

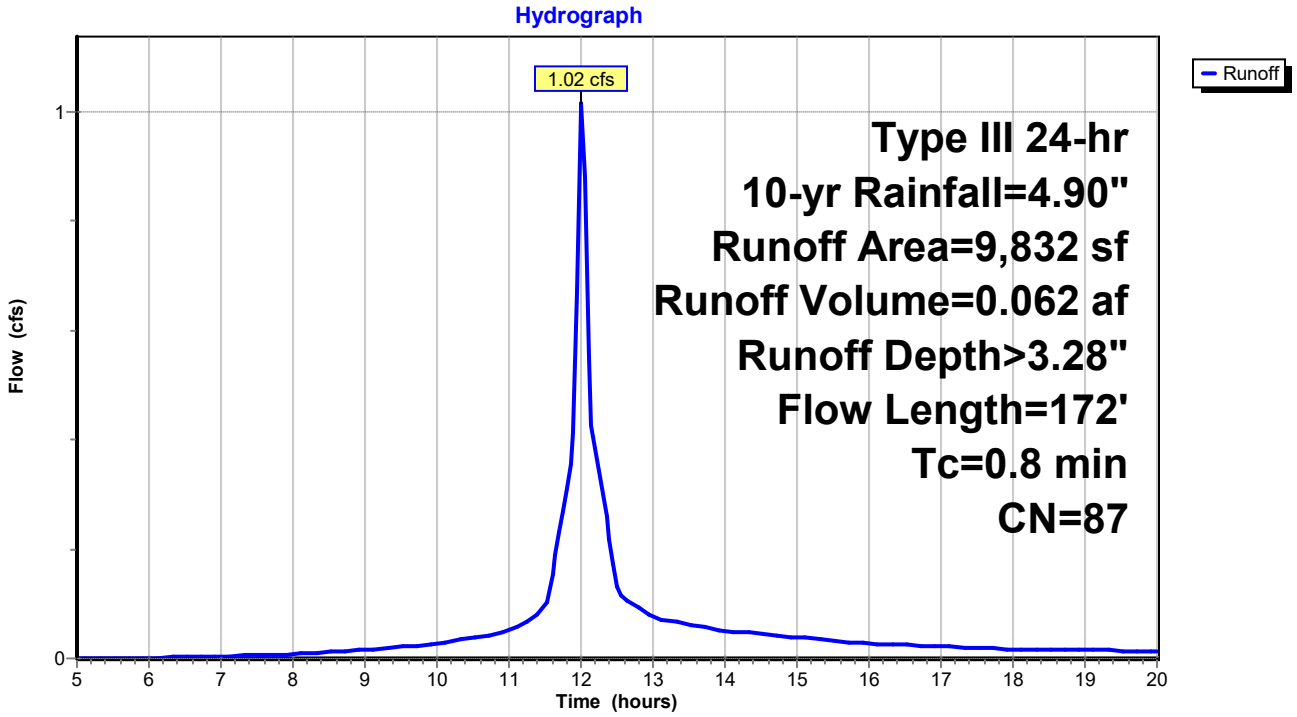

Summary for Subcatchment 2S: Post Subcatchment 2

Runoff = 0.90 cfs @ 12.06 hrs, Volume= 0.056 af, Depth> 2.53"
Routed to Link DP1 : DP1

Runoff by SCS TR-20 method, UH=SCS, Weighted-CN, Time Span= 5.00-20.00 hrs, dt= 0.05 hrs
Type III 24-hr 10-yr Rainfall=4.90"

Area (sf)	CN	Description
10,250	77	Woods, Good, HSG D
1,238	98	Paved parking, HSG D
11,488	79	Weighted Average
10,250		89.22% Pervious Area
1,238		10.78% Impervious Area

Tc (min)	Length (feet)	Slope (ft/ft)	Velocity (ft/sec)	Capacity (cfs)	Description
2.5	21	0.1905	0.14		**Sheet Flow, Tc-1** Woods: Light underbrush n= 0.400 P2= 3.30"
0.9	112	0.1696	2.06		**Shallow Concentrated Flow, Tc-2** Woodland Kv= 5.0 fps
3.4	133	Total			

Subcatchment 2S: Post Subcatchment 2

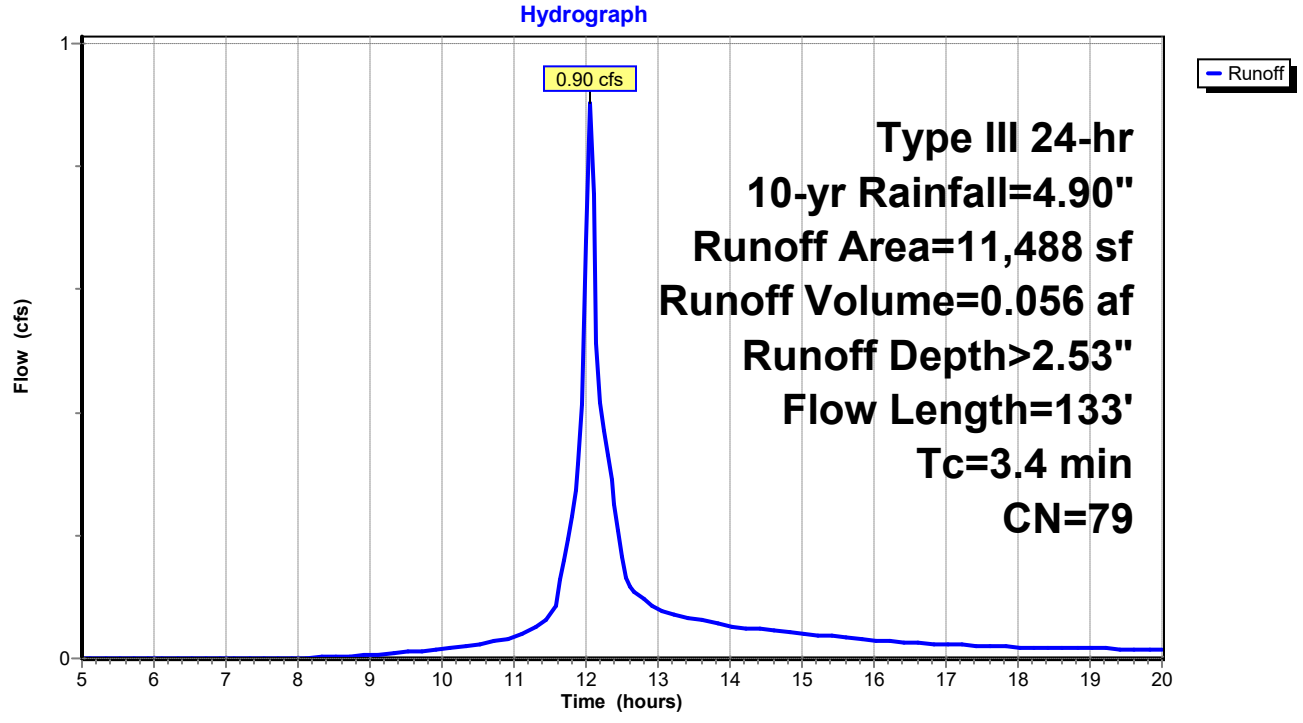

Summary for Subcatchment 3S: Post Subcatchment 3

Runoff = 1.15 cfs @ 12.07 hrs, Volume= 0.076 af, Depth> 2.98"
Routed to Pond 3P : Bioretention Filter Cell 2

Runoff by SCS TR-20 method, UH=SCS, Weighted-CN, Time Span= 5.00-20.00 hrs, dt= 0.05 hrs
Type III 24-hr 10-yr Rainfall=4.90"

	Area (sf)	CN	Description
	6,822	77	Woods, Good, HSG D
*	580	73	Biofiltration cell, Good, HSG D
*	3,768	98	Paved access drive, HSG D
	1,487	80	>75% Grass cover, Good, HSG D
*	708	98	Ledge, HSG D
	13,365	84	Weighted Average
	8,889		66.51% Pervious Area
	4,476		33.49% Impervious Area

Tc (min)	Length (feet)	Slope (ft/ft)	Velocity (ft/sec)	Capacity (cfs)	Description
4.2	43	0.2093	0.17		**Sheet Flow, Tc-1** Woods: Light underbrush n= 0.400 P2= 3.30"
0.7	214	0.0500	5.25	15.74	**Channel Flow, Tc-2** Area= 3.0 sf Perim= 9.2' r= 0.33' n= 0.030 Earth, grassed & winding
0.0	5	0.0500	3.35		**Shallow Concentrated Flow, Tc-3** Grassed Waterway Kv= 15.0 fps
4.9	262	Total			

Subcatchment 3S: Post Subcatchment 3

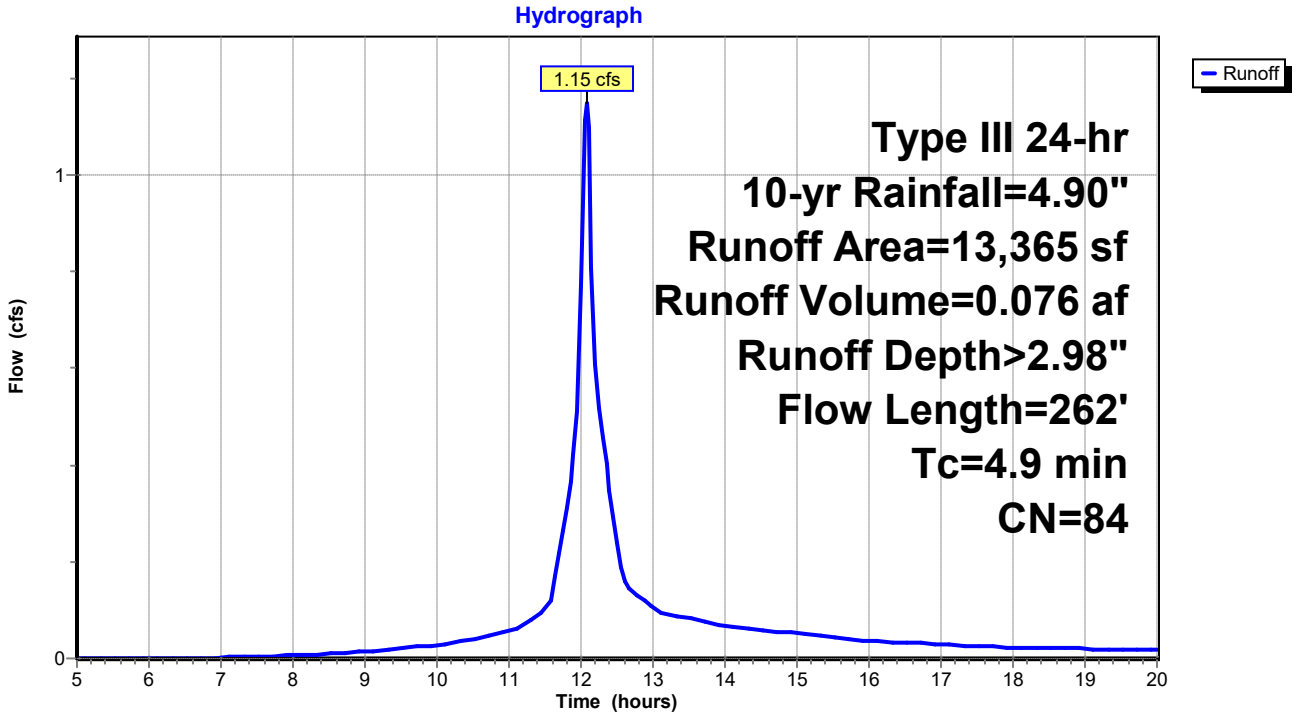

Summary for Subcatchment 4S: Post Subcatchment 4

Runoff = 1.21 cfs @ 12.11 hrs, Volume= 0.085 af, Depth> 2.53"
Routed to Link DP2 : DP2

Runoff by SCS TR-20 method, UH=SCS, Weighted-CN, Time Span= 5.00-20.00 hrs, dt= 0.05 hrs
Type III 24-hr 10-yr Rainfall=4.90"

	Area (sf)	CN	Description
*	295	98	Paved access drive, HSG D
	1,450	80	>75% Grass cover, Good, HSG D
	15,784	79	Woods, Fair, HSG D
	17,529	79	Weighted Average
	17,234		98.32% Pervious Area
	295		1.68% Impervious Area

Tc (min)	Length (feet)	Slope (ft/ft)	Velocity (ft/sec)	Capacity (cfs)	Description
6.8	62	0.1290	0.15		**Sheet Flow, Tc-1** Woods: Light underbrush n= 0.400 P2= 3.30"
0.4	64	0.2343	2.42		**Shallow Concentrated Flow, Tc-2** Woodland Kv= 5.0 fps
7.2	126	Total			

Subcatchment 4S: Post Subcatchment 4

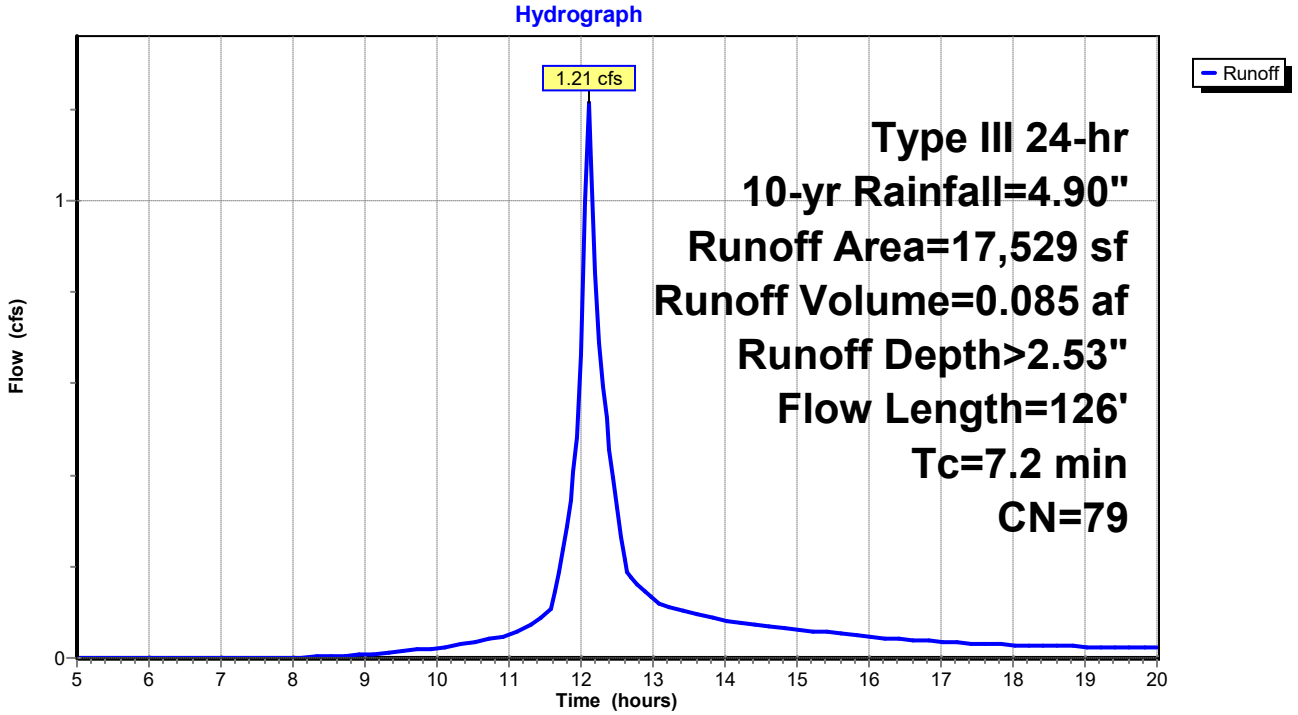

Summary for Subcatchment 5S: Post Subcatchment 5

Runoff = 4.26 cfs @ 12.10 hrs, Volume= 0.297 af, Depth> 2.62"
Routed to Reach DP3 : Shoreline 3

Runoff by SCS TR-20 method, UH=SCS, Weighted-CN, Time Span= 5.00-20.00 hrs, dt= 0.05 hrs
Type III 24-hr 10-yr Rainfall=4.90"

	Area (sf)	CN	Description
*	1,650	98	Paved acccess drive, HSG D
	751	98	Roofs, HSG D
*	6,955	88	Sand beach, HSG D
	3,872	96	Gravel surface, HSG D
	45,951	77	Woods, Good, HSG D
	59,179	80	Weighted Average
	56,778		95.94% Pervious Area
	2,401		4.06% Impervious Area

Tc (min)	Length (feet)	Slope (ft/ft)	Velocity (ft/sec)	Capacity (cfs)	Description
2.7	23	0.1740	0.14		**Sheet Flow, Tc-1** Woods: Light underbrush n= 0.400 P2= 3.30"
1.0	70	0.0574	1.20		**Shallow Concentrated Flow, Tc-2** Woodland Kv= 5.0 fps
0.5	170	0.1059	5.24		**Shallow Concentrated Flow, Tc-3** Unpaved Kv= 16.1 fps
2.5	140	0.0357	0.94		**Shallow Concentrated Flow, Tc-4** Woodland Kv= 5.0 fps
0.3	42	0.0714	2.67		**Shallow Concentrated Flow, Tc-5** Nearly Bare & Untilled Kv= 10.0 fps
7.0	445	Total			

Subcatchment 5S: Post Subcatchment 5

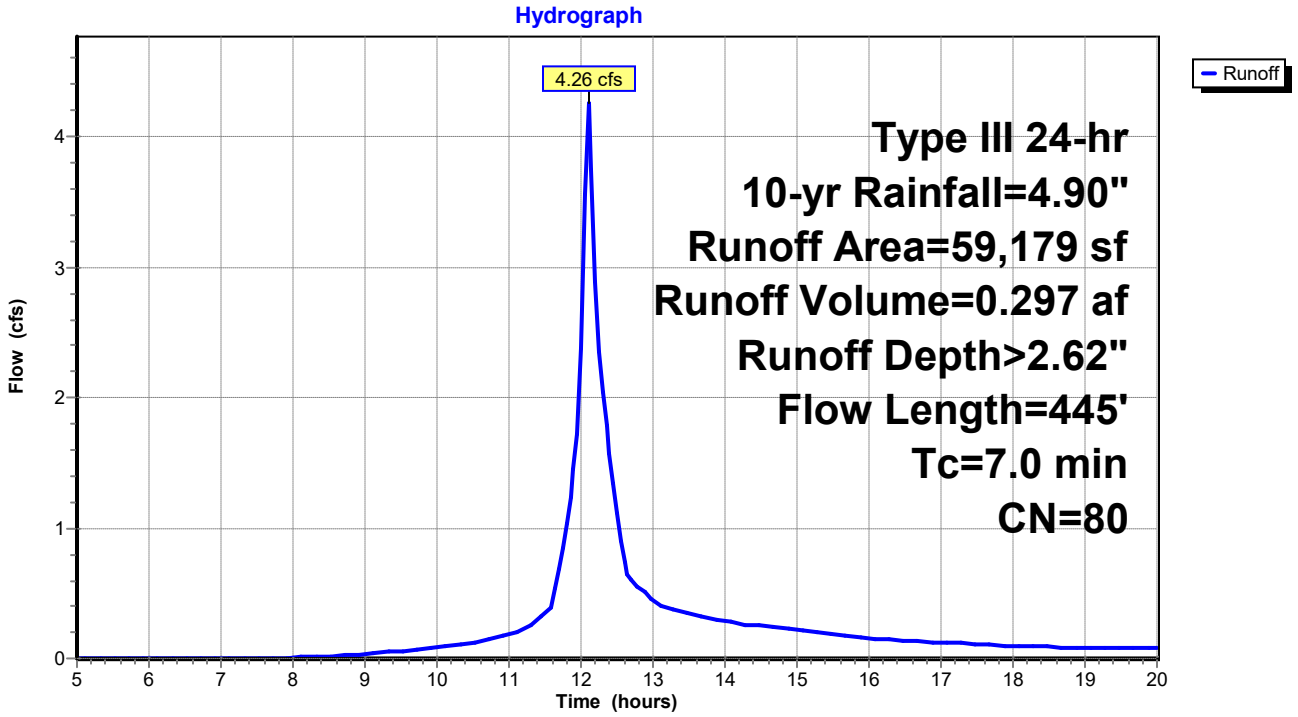

Summary for Reach 1R: Reach 1

Inflow Area = 0.226 ac, 50.01% Impervious, Inflow Depth > 3.21" for 10-yr event
Inflow = 0.99 cfs @ 12.02 hrs, Volume= 0.060 af
Outflow = 0.99 cfs @ 12.02 hrs, Volume= 0.060 af, Atten= 0%, Lag= 0.0 min
Routed to Link DP1 : DP1

Routing by Stor-Ind method, Time Span= 5.00-20.00 hrs, dt= 0.05 hrs

Reach 1R: Reach 1

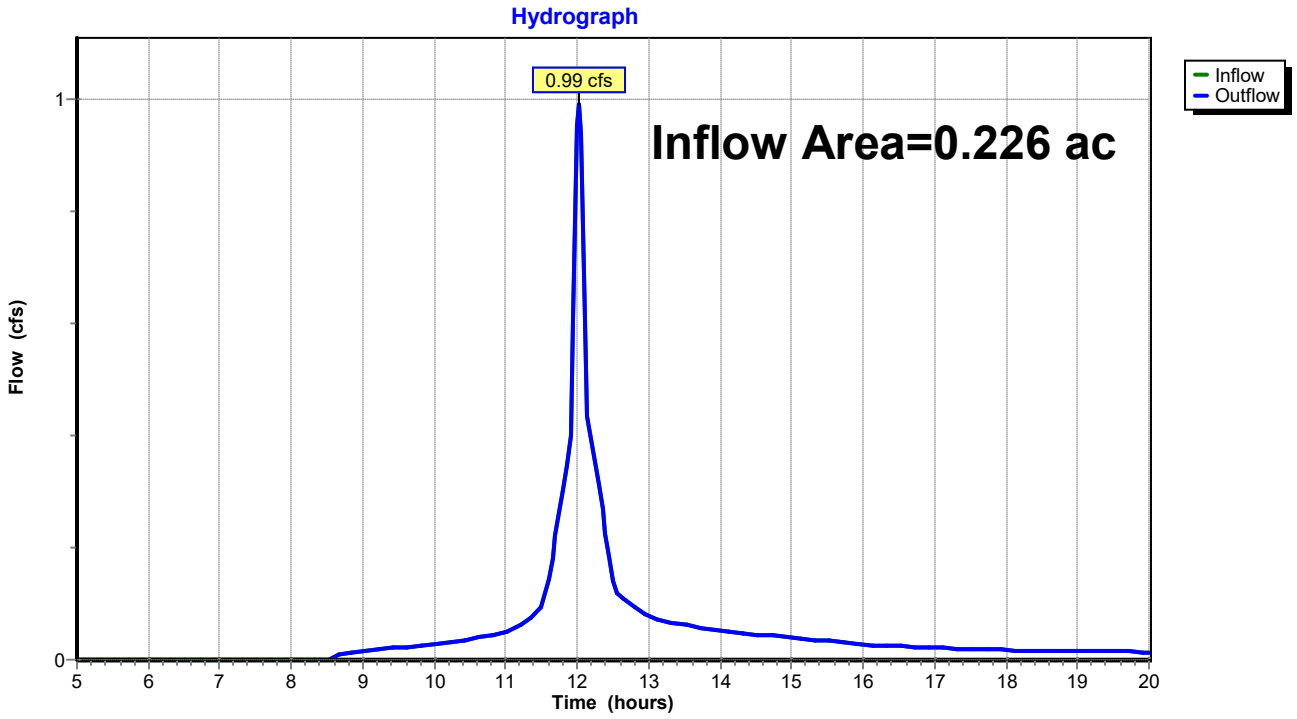

Summary for Reach 2R: Reach 2

Inflow Area = 0.307 ac, 33.49% Impervious, Inflow Depth > 2.84" for 10-yr event
Inflow = 1.10 cfs @ 12.11 hrs, Volume= 0.073 af
Outflow = 1.10 cfs @ 12.11 hrs, Volume= 0.073 af, Atten= 0%, Lag= 0.0 min
Routed to Link DP2 : DP2

Routing by Stor-Ind method, Time Span= 5.00-20.00 hrs, dt= 0.05 hrs

Reach 2R: Reach 2

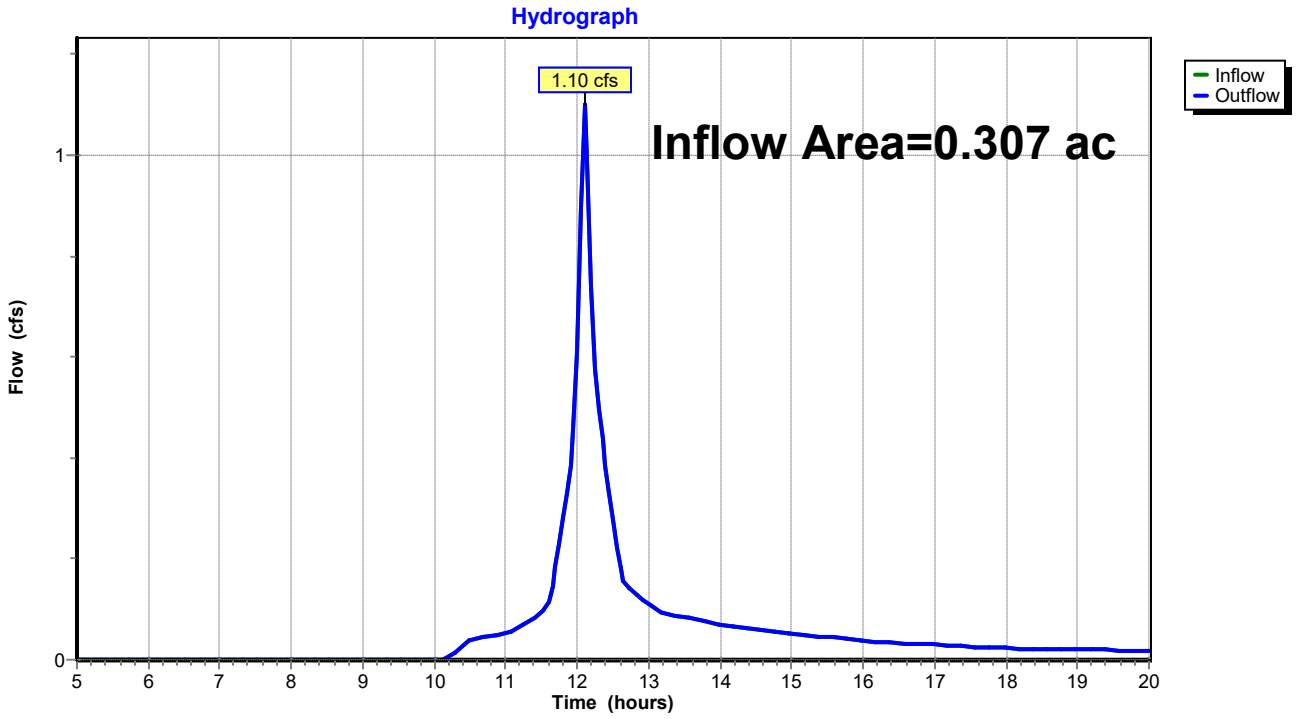

Summary for Reach DP3: Shoreline 3

Inflow Area = 1.359 ac, 4.06% Impervious, Inflow Depth > 2.62" for 10-yr event
Inflow = 4.26 cfs @ 12.10 hrs, Volume= 0.297 af
Outflow = 4.26 cfs @ 12.10 hrs, Volume= 0.297 af, Atten= 0%, Lag= 0.0 min
Routed to Reach SP1 : SACO RIVER / OCEAN

Routing by Stor-Ind method, Time Span= 5.00-20.00 hrs, dt= 0.05 hrs

Reach DP3: Shoreline 3

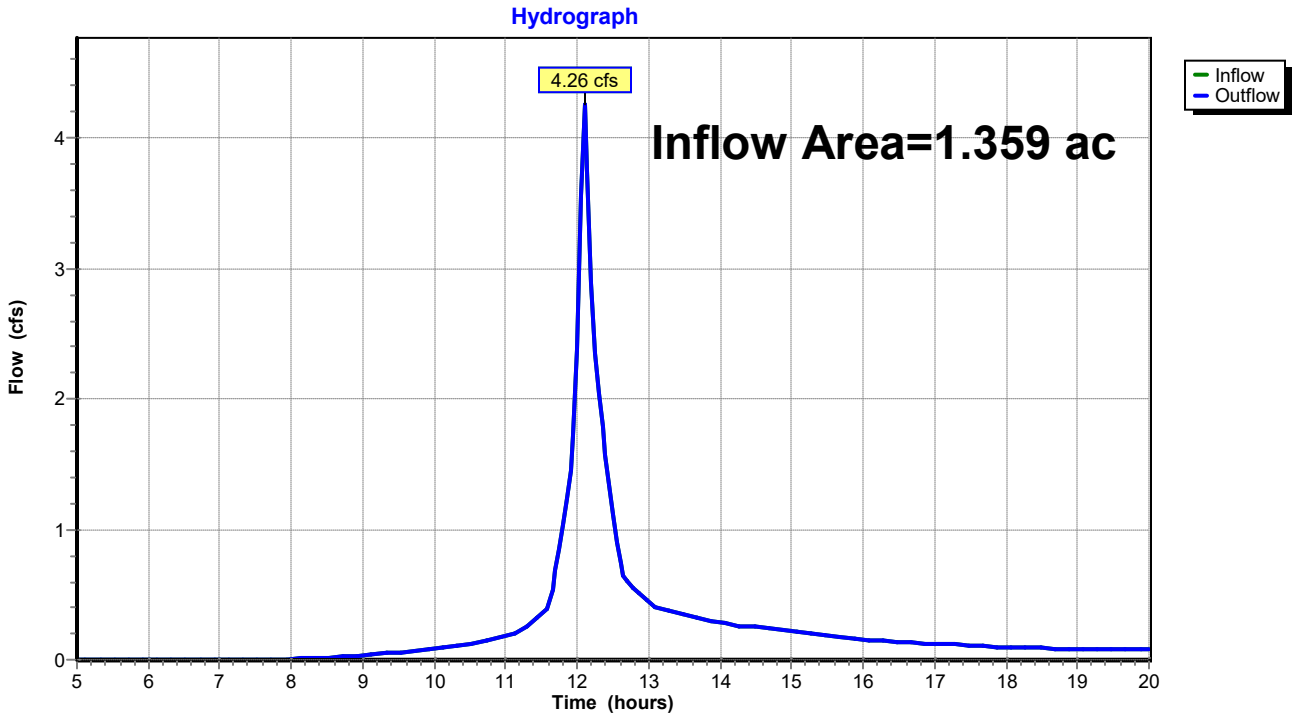

Summary for Reach SP1: SACO RIVER / OCEAN

Inflow Area = 2.557 ac, 11.96% Impervious, Inflow Depth > 2.68" for 10-yr event
Inflow = 7.94 cfs @ 12.09 hrs, Volume= 0.570 af
Outflow = 7.94 cfs @ 12.09 hrs, Volume= 0.570 af, Atten= 0%, Lag= 0.0 min

Routing by Stor-Ind method, Time Span= 5.00-20.00 hrs, dt= 0.05 hrs

Reach SP1: SACO RIVER / OCEAN

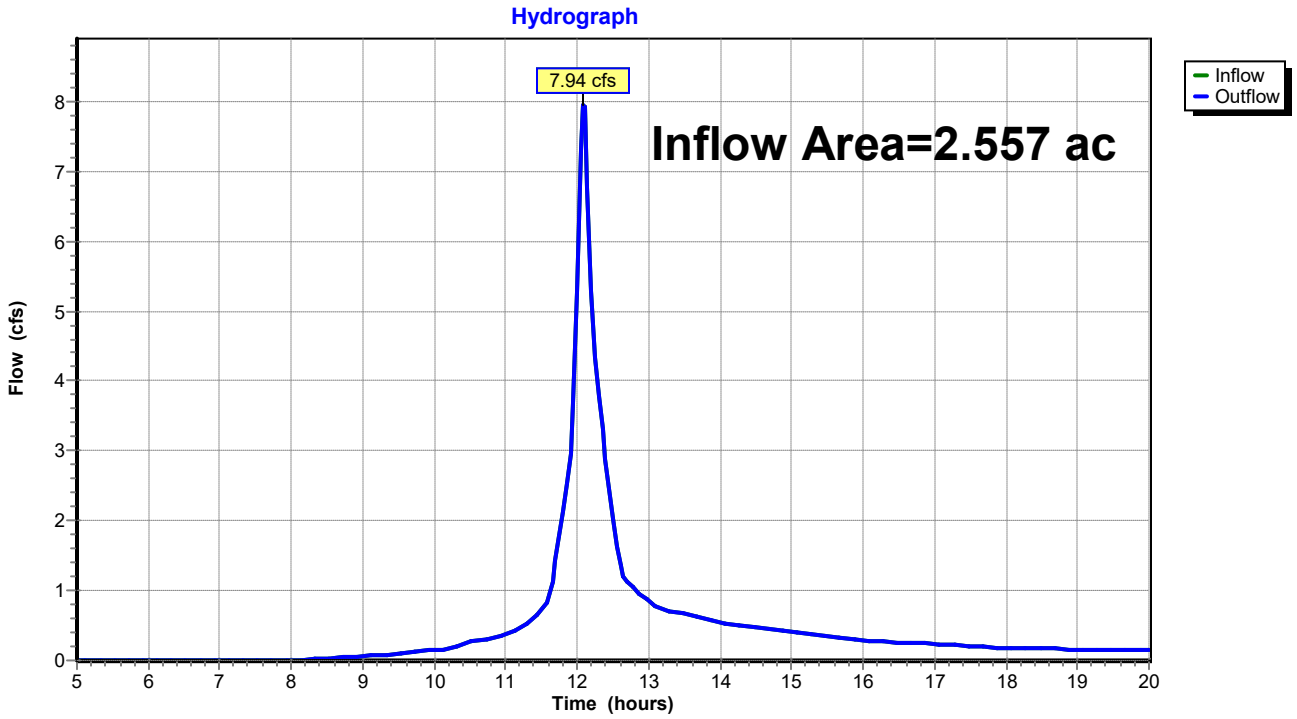

Summary for Pond 1P: Bioretention Filter Cell 1

Inflow Area = 0.226 ac, 50.01% Impervious, Inflow Depth > 3.28" for 10-yr event
Inflow = 1.02 cfs @ 12.01 hrs, Volume= 0.062 af
Outflow = 0.99 cfs @ 12.02 hrs, Volume= 0.060 af, Atten= 3%, Lag= 0.7 min
Primary = 0.99 cfs @ 12.02 hrs, Volume= 0.060 af
Routed to Pond 2P : CB-1

Routing by Stor-Ind method, Time Span= 5.00-20.00 hrs, dt= 0.05 hrs
Peak Elev= 18.16' @ 12.02 hrs Surf.Area= 264 sf Storage= 92 cf

Plug-Flow detention time= 15.2 min calculated for 0.060 af (98% of inflow)
Center-of-Mass det. time= 7.1 min (773.3 - 766.2)

Volume	Invert	Avail.Storage	Storage Description
#1	17.50'	200 cf	**Custom Stage Data (Prismatic)** Listed below (Recalc)

Elevation (feet)	Surf.Area (sq-ft)	Inc.Store (cubic-feet)	Cum.Store (cubic-feet)
17.50	0	0	0
18.00	213	53	53
18.50	372	146	200

Device	Routing	Invert	Outlet Devices
#1	Primary	18.00'	**18.0" Horiz. Orifice/Grate** C= 0.600 in 24.0" Grate (56% open area) Limited to weir flow at low heads

Primary OutFlow Max=0.94 cfs @ 12.02 hrs HW=18.16' (Free Discharge)
↑**1=Orifice/Grate** (Weir Controls 0.94 cfs @ 1.29 fps)

Pond 1P: Bioretention Filter Cell 1

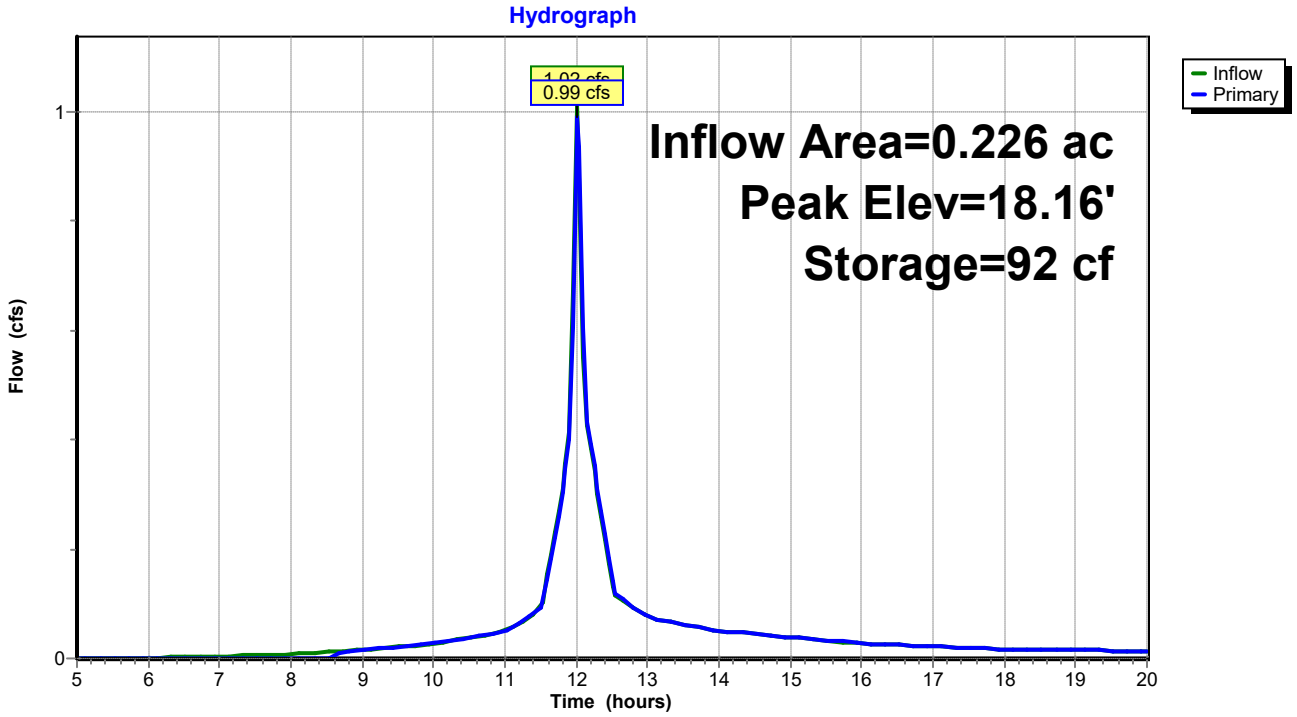

Summary for Pond 2P: CB-1

Inflow Area = 0.226 ac, 50.01% Impervious, Inflow Depth > 3.21" for 10-yr event
Inflow = 0.99 cfs @ 12.02 hrs, Volume= 0.060 af
Outflow = 0.99 cfs @ 12.02 hrs, Volume= 0.060 af, Atten= 0%, Lag= 0.0 min
Primary = 0.99 cfs @ 12.02 hrs, Volume= 0.060 af
Routed to Reach 1R : Reach 1

Routing by Stor-Ind method, Time Span= 5.00-20.00 hrs, dt= 0.05 hrs
Peak Elev= 14.29' @ 12.02 hrs

Device	Routing	Invert	Outlet Devices
#1	Primary	13.75'	**15.0" Round Culvert** L= 48.0' CPP, projecting, no headwall, Ke= 0.900 Inlet / Outlet Invert= 13.75' / 12.00' S= 0.0365 '/' Cc= 0.900 n= 0.013 Corrugated PE, smooth interior, Flow Area= 1.23 sf

Primary OutFlow Max=0.94 cfs @ 12.02 hrs HW=14.27' (Free Discharge)
1=Culvert (Inlet Controls 0.94 cfs @ 1.94 fps)

Pond 2P: CB-1

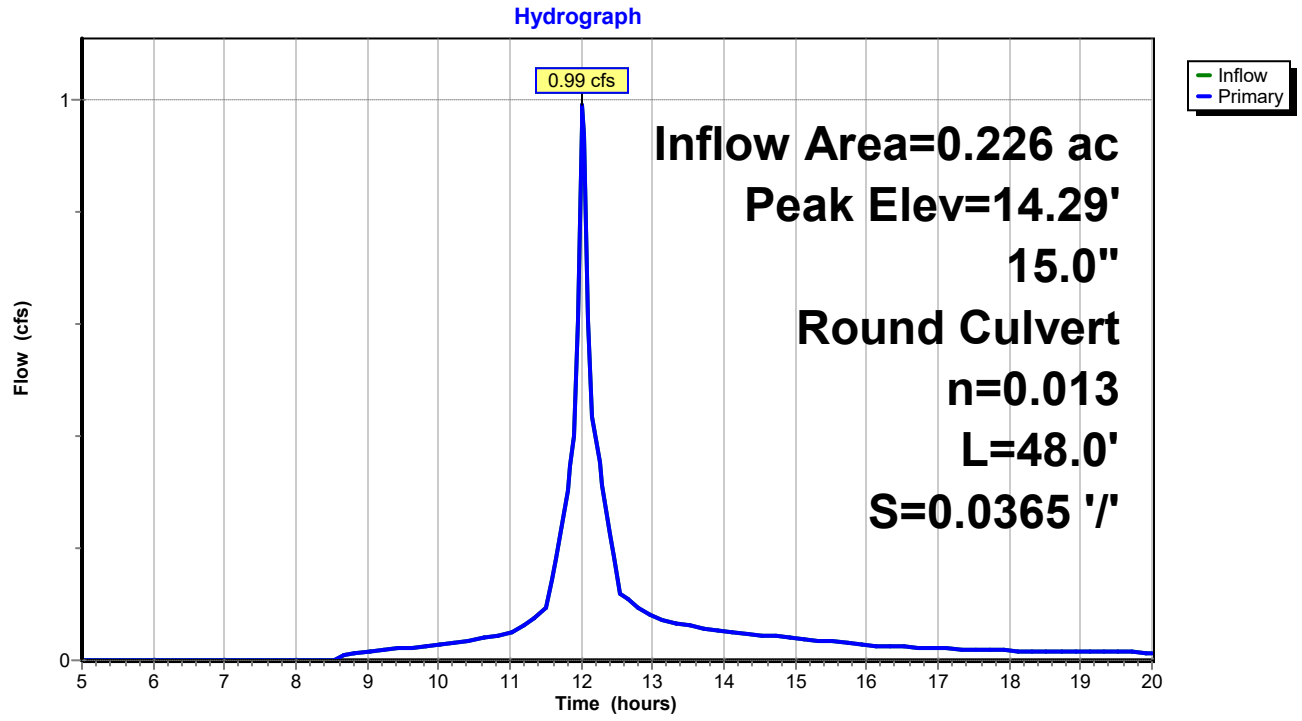

Summary for Pond 3P: Bioretention Filter Cell 2

Inflow Area = 0.307 ac, 33.49% Impervious, Inflow Depth > 2.98" for 10-yr event
Inflow = 1.15 cfs @ 12.07 hrs, Volume= 0.076 af
Outflow = 1.14 cfs @ 12.08 hrs, Volume= 0.075 af, Atten= 0%, Lag= 0.6 min
Primary = 1.14 cfs @ 12.08 hrs, Volume= 0.075 af
Routed to Pond 4P : CB-2

Routing by Stor-Ind method, Time Span= 5.00-20.00 hrs, dt= 0.05 hrs
Peak Elev= 23.68' @ 12.08 hrs Surf.Area= 227 sf Storage= 77 cf

Plug-Flow detention time= 9.5 min calculated for 0.075 af (98% of inflow)
Center-of-Mass det. time= 4.4 min (781.8 - 777.5)

Volume	Invert	Avail.Storage	Storage Description
#1	23.00'	380 cf	**Custom Stage Data (Prismatic)** Listed below (Recalc)

Elevation (feet)	Surf.Area (sq-ft)	Inc.Store (cubic-feet)	Cum.Store (cubic-feet)
23.00	0	0	0
24.00	335	168	168
24.50	515	213	380

Device	Routing	Invert	Outlet Devices
#1	Primary	23.50'	**18.0" Horiz. Orifice/Grate** C= 0.600 in 24.0" Grate (56% open area) Limited to weir flow at low heads

Primary OutFlow Max=1.11 cfs @ 12.08 hrs HW=23.67' (Free Discharge)
1=Orifice/Grate (Weir Controls 1.11 cfs @ 1.36 fps)

Pond 3P: Bioretention Filter Cell 2

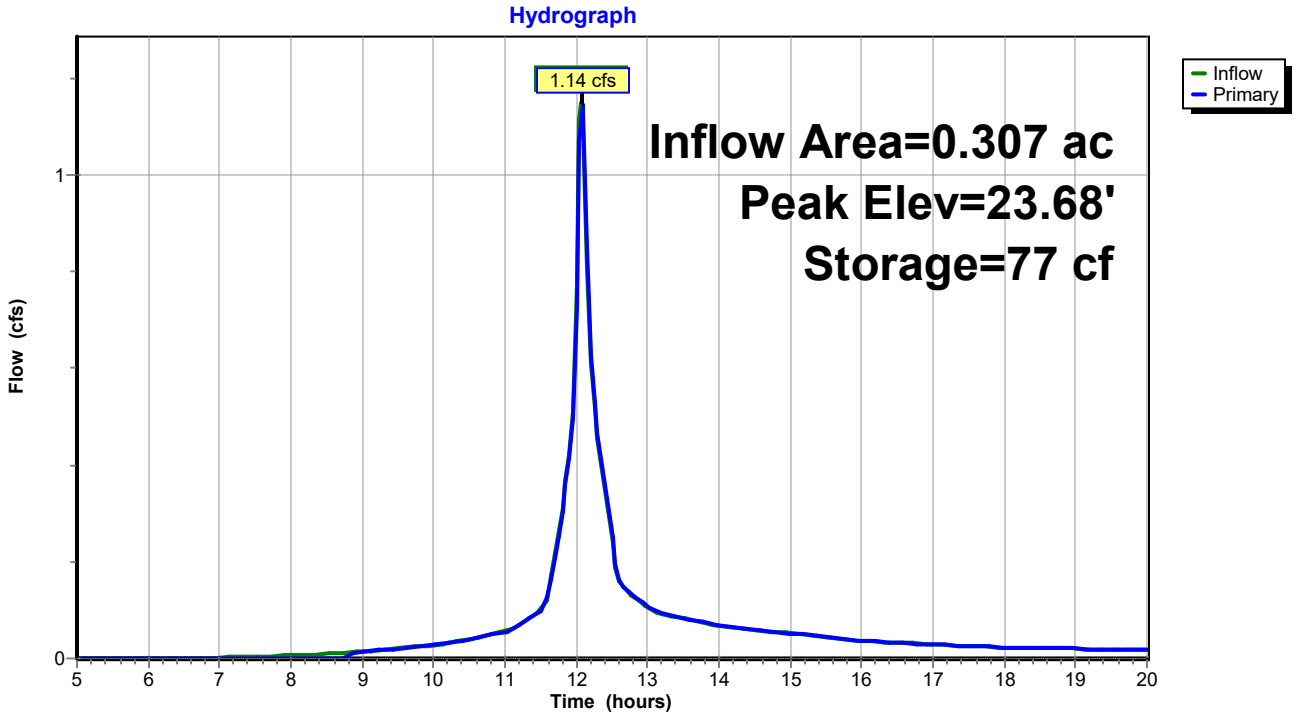

Summary for Pond 4P: CB-2

Inflow Area = 0.307 ac, 33.49% Impervious, Inflow Depth > 2.95" for 10-yr event
Inflow = 1.14 cfs @ 12.08 hrs, Volume= 0.075 af
Outflow = 1.14 cfs @ 12.08 hrs, Volume= 0.075 af, Atten= 0%, Lag= 0.0 min
Primary = 1.14 cfs @ 12.08 hrs, Volume= 0.075 af
Routed to Pond 5P : Level Lip Speader

Routing by Stor-Ind method, Time Span= 5.00-20.00 hrs, dt= 0.05 hrs
Peak Elev= 19.29' @ 12.08 hrs

Device	Routing	Invert	Outlet Devices
#1	Primary	18.75'	**18.0" Round Culvert** L= 40.0' CPP, projecting, no headwall, Ke= 0.900 Inlet / Outlet Invert= 18.75' / 18.00' S= 0.0187 '/' Cc= 0.900 n= 0.013 Corrugated PE, smooth interior, Flow Area= 1.77 sf

Primary OutFlow Max=1.11 cfs @ 12.08 hrs HW=19.28' (Free Discharge)
1=Culvert (Inlet Controls 1.11 cfs @ 1.96 fps)

Pond 4P: CB-2

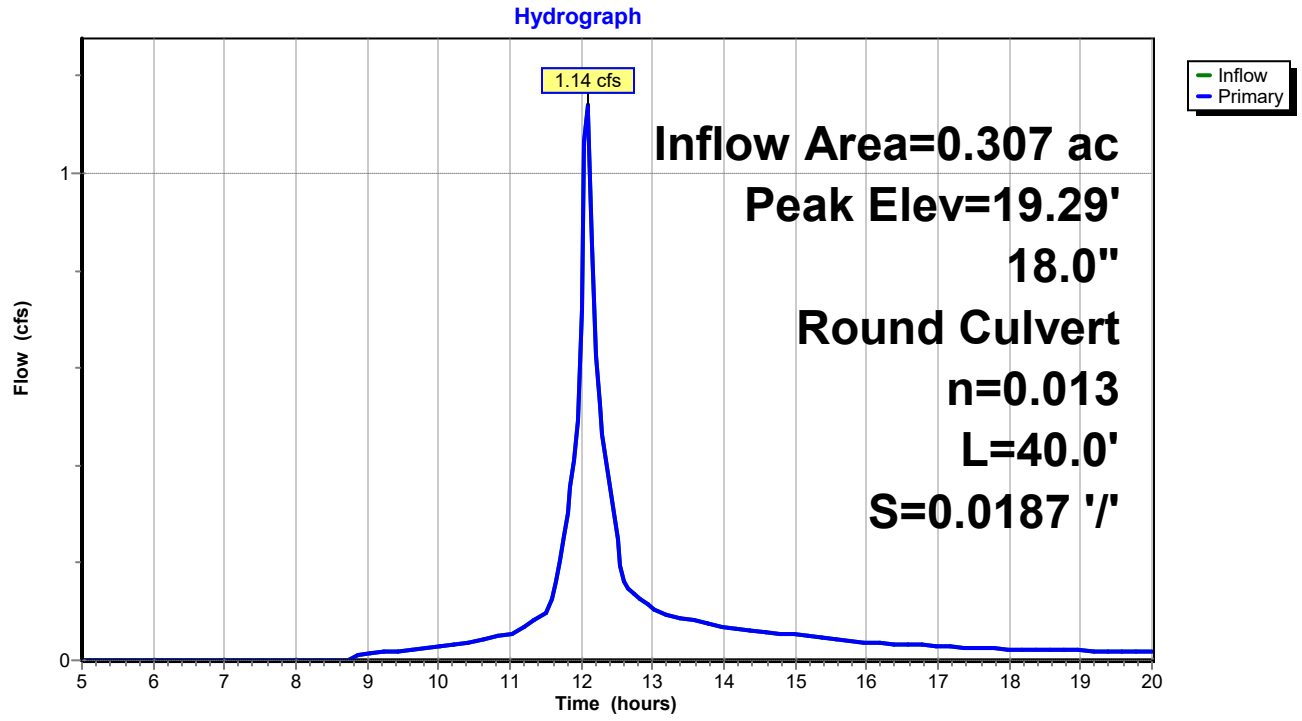

Summary for Pond 5P: Level Lip Speader

Inflow Area = 0.307 ac, 33.49% Impervious, Inflow Depth > 2.95" for 10-yr event
Inflow = 1.14 cfs @ 12.08 hrs, Volume= 0.075 af
Outflow = 1.10 cfs @ 12.11 hrs, Volume= 0.073 af, Atten= 4%, Lag= 1.4 min
Primary = 1.10 cfs @ 12.11 hrs, Volume= 0.073 af
Routed to Reach 2R : Reach 2

Routing by Stor-Ind method, Time Span= 5.00-20.00 hrs, dt= 0.05 hrs
Peak Elev= 18.00' @ 10.30 hrs Surf.Area= 168 sf Storage= 115 cf
Flood Elev= 20.00' Surf.Area= 168 sf Storage= 115 cf

Plug-Flow detention time= 21.7 min calculated for 0.072 af (96% of inflow)
Center-of-Mass det. time= 8.6 min (790.4 - 781.8)

Volume	Invert	Avail.Storage	Storage Description
#1	17.00'	115 cf	**Custom Stage Data (Prismatic)** Listed below (Recalc)

Elevation (feet)	Surf.Area (sq-ft)	Voids (%)	Inc.Store (cubic-feet)	Cum.Store (cubic-feet)
17.00	61	0.0	0	0
18.00	168	100.0	115	115

Device	Routing	Invert	Outlet Devices
#0	Primary	18.00'	**Automatic Storage Overflow** (Discharged without head)

Primary OutFlow Max=0.00 cfs @ 12.11 hrs HW=18.00' (Free Discharge)

Pond 5P: Level Lip Speader

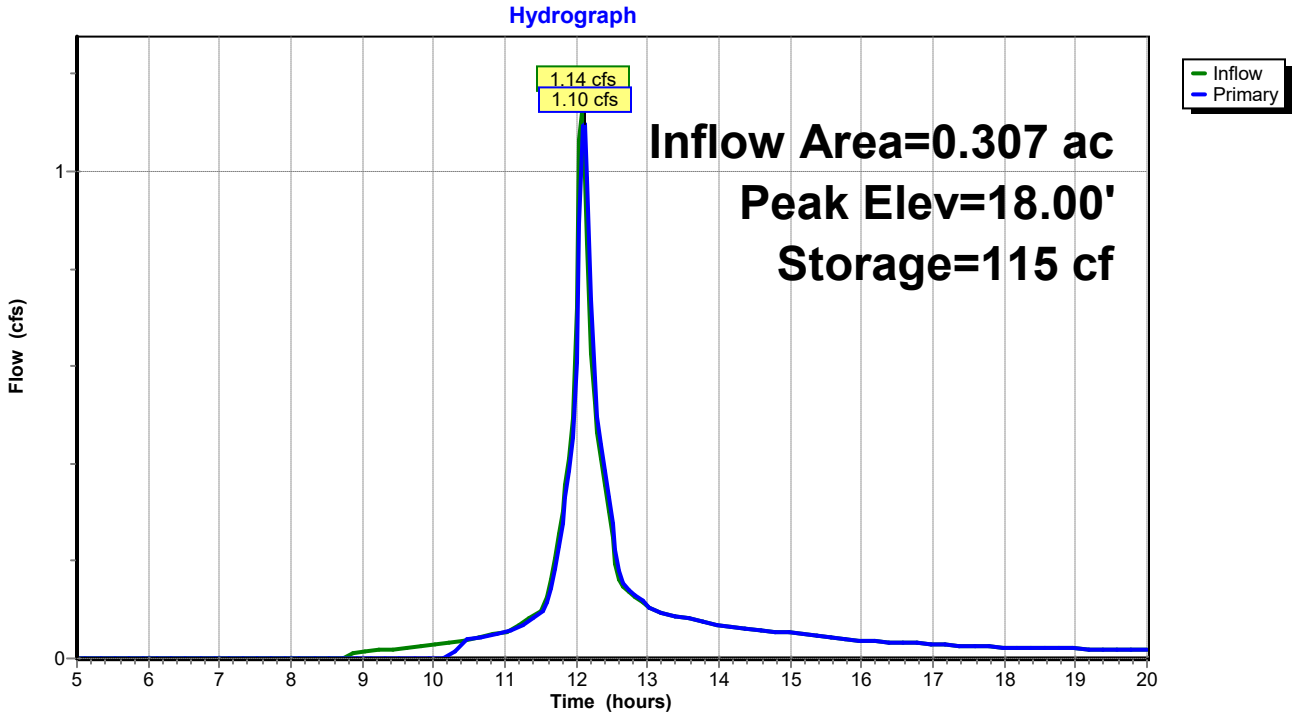

Summary for Link DP1: DP1

Inflow Area = 0.489 ac, 28.87% Impervious, Inflow Depth > 2.85" for 10-yr event
Inflow = 1.85 cfs @ 12.04 hrs, Volume= 0.116 af
Primary = 1.85 cfs @ 12.04 hrs, Volume= 0.116 af, Atten= 0%, Lag= 0.0 min
Routed to Reach SP1 : SACO RIVER / OCEAN

Primary outflow = Inflow, Time Span= 5.00-20.00 hrs, dt= 0.05 hrs

Link DP1: DP1

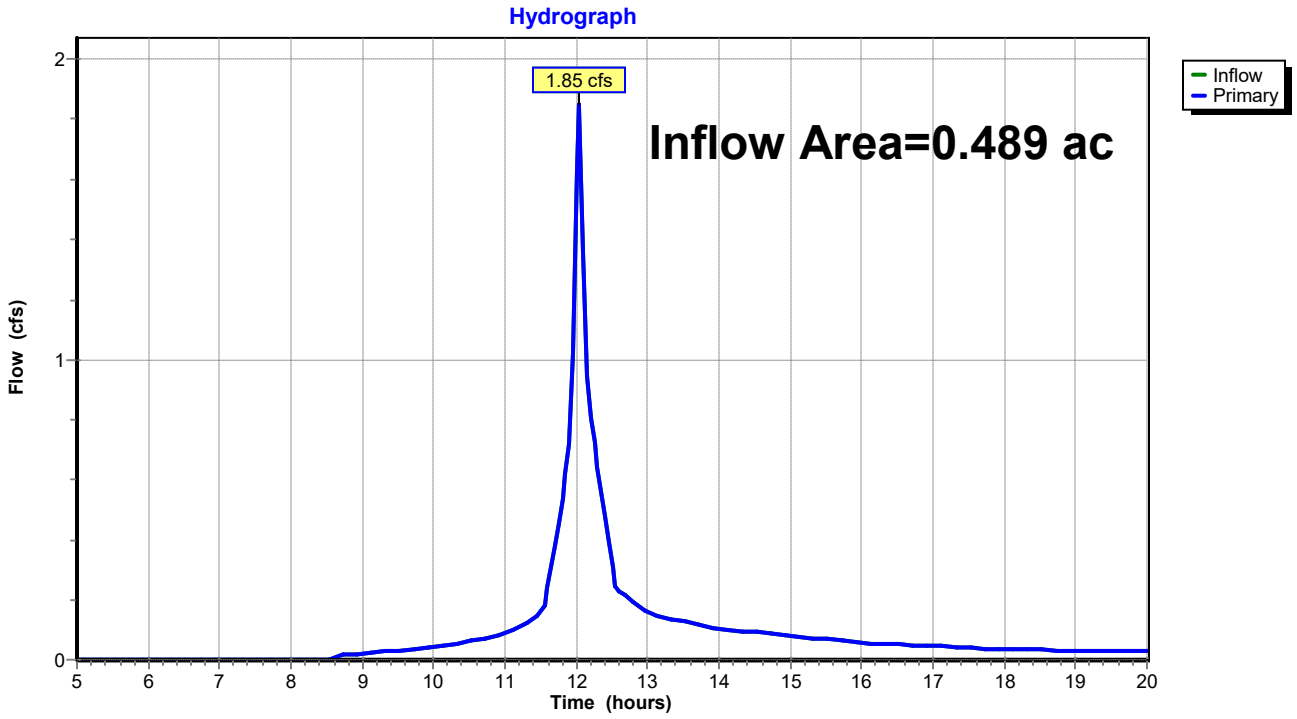

Summary for Link DP2: DP2

Inflow Area = 0.709 ac, 15.44% Impervious, Inflow Depth > 2.67" for 10-yr event
Inflow = 2.31 cfs @ 12.11 hrs, Volume= 0.158 af
Primary = 2.31 cfs @ 12.11 hrs, Volume= 0.158 af, Atten= 0%, Lag= 0.0 min
Routed to Reach SP1 : SACO RIVER / OCEAN

Primary outflow = Inflow, Time Span= 5.00-20.00 hrs, dt= 0.05 hrs

Link DP2: DP2

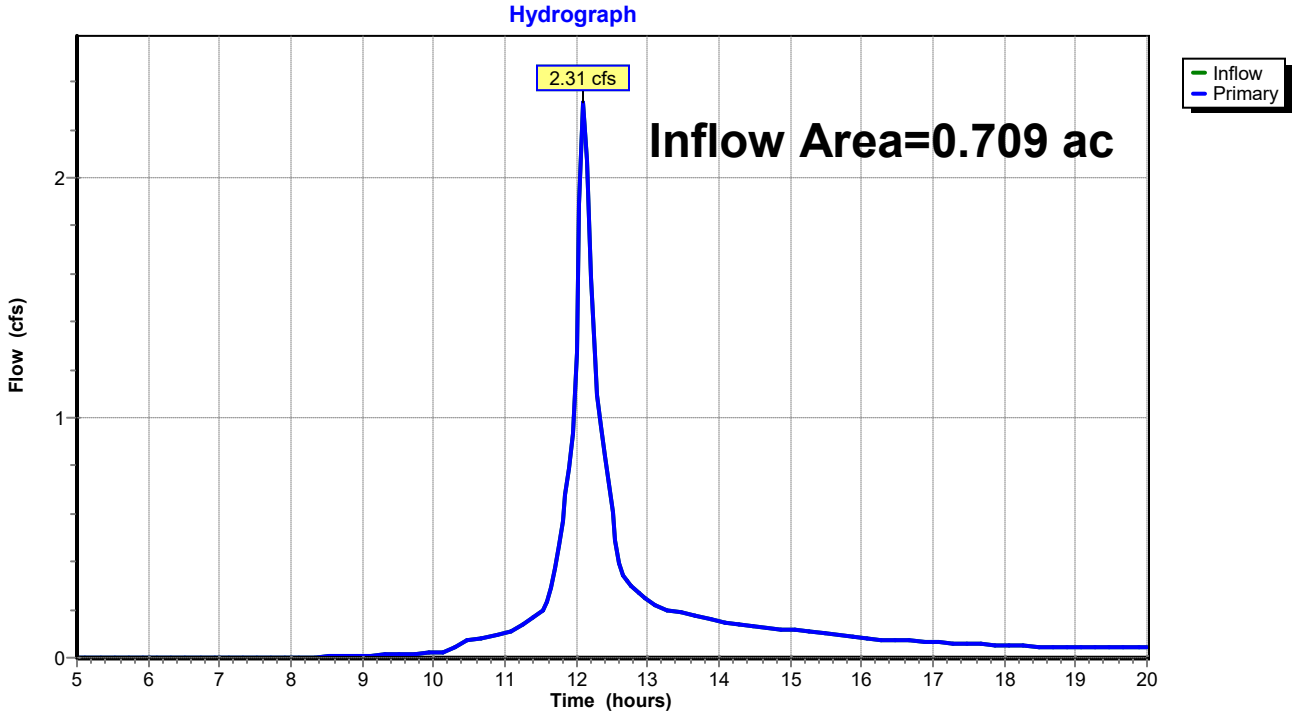

Time span=5.00-20.00 hrs, dt=0.05 hrs, 301 points
Runoff by SCS TR-20 method, UH=SCS, Weighted-CN
Reach routing by Stor-Ind method - Pond routing by Stor-Ind method

Subcatchment 1S: Post Subcatchment 1 Runoff Area=9,832 sf 50.01% Impervious Runoff Depth>4.45"
Flow Length=172' Tc=0.8 min CN=87 Runoff=1.36 cfs 0.084 af

Subcatchment 2S: Post Subcatchment 2 Runoff Area=11,488 sf 10.78% Impervious Runoff Depth>3.62"
Flow Length=133' Tc=3.4 min CN=79 Runoff=1.28 cfs 0.080 af

Subcatchment 3S: Post Subcatchment 3 Runoff Area=13,365 sf 33.49% Impervious Runoff Depth>4.13"
Flow Length=262' Tc=4.9 min CN=84 Runoff=1.57 cfs 0.106 af

Subcatchment 4S: Post Subcatchment 4 Runoff Area=17,529 sf 1.68% Impervious Runoff Depth>3.61"
Flow Length=126' Tc=7.2 min CN=79 Runoff=1.72 cfs 0.121 af

Subcatchment 5S: Post Subcatchment 5 Runoff Area=59,179 sf 4.06% Impervious Runoff Depth>3.72"
Flow Length=445' Tc=7.0 min CN=80 Runoff=5.99 cfs 0.421 af

Reach 1R: Reach 1 Inflow=1.33 cfs 0.082 af
Outflow=1.33 cfs 0.082 af

Reach 2R: Reach 2 Inflow=1.50 cfs 0.102 af
Outflow=1.50 cfs 0.102 af

Reach DP3: Shoreline 3 Inflow=5.99 cfs 0.421 af
Outflow=5.99 cfs 0.421 af

Reach SP1: SACO RIVER / OCEAN Inflow=11.09 cfs 0.806 af
Outflow=11.09 cfs 0.806 af

Pond 1P: Bioretention Filter Cell 1 Peak Elev=18.20' Storage=101 cf Inflow=1.36 cfs 0.084 af
Outflow=1.33 cfs 0.082 af

Pond 2P: CB-1 Peak Elev=14.38' Inflow=1.33 cfs 0.082 af
15.0" Round Culvert n=0.013 L=48.0' S=0.0365 '/' Outflow=1.33 cfs 0.082 af

Pond 3P: Bioretention Filter Cell 2 Peak Elev=23.72' Storage=86 cf Inflow=1.57 cfs 0.106 af
Outflow=1.56 cfs 0.105 af

Pond 4P: CB-2 Peak Elev=19.39' Inflow=1.56 cfs 0.105 af
18.0" Round Culvert n=0.013 L=40.0' S=0.0187 '/' Outflow=1.56 cfs 0.105 af

Pond 5P: Level Lip Speader Peak Elev=18.00' Storage=115 cf Inflow=1.56 cfs 0.105 af
Outflow=1.50 cfs 0.102 af

Link DP1: DP1 Inflow=2.54 cfs 0.162 af
Primary=2.54 cfs 0.162 af

Link DP2: DP2 Inflow=3.22 cfs 0.223 af
Primary=3.22 cfs 0.223 af

Total Runoff Area = 2.557 ac Runoff Volume = 0.811 af Average Runoff Depth = 3.80"
88.04% Pervious = 2.251 ac 11.96% Impervious = 0.306 ac

Summary for Subcatchment 1S: Post Subcatchment 1

Runoff = 1.36 cfs @ 12.01 hrs, Volume= 0.084 af, Depth> 4.45"
Routed to Pond 1P : Bioretention Filter Cell 1

Runoff by SCS TR-20 method, UH=SCS, Weighted-CN, Time Span= 5.00-20.00 hrs, dt= 0.05 hrs
Type III 24-hr 25-yr Rainfall=6.20"

	Area (sf)	CN	Description
	3,430	77	Woods, Good, HSG D
*	982	98	Ledge, HSG D
	595	80	>75% Grass cover, Good, HSG D
*	3,935	98	Paved Access Drive, HSG D
*	890	73	Bioretention Filter Cell, Good, HSG D
	9,832	87	Weighted Average
	4,915		49.99% Pervious Area
	4,917		50.01% Impervious Area

Tc (min)	Length (feet)	Slope (ft/ft)	Velocity (ft/sec)	Capacity (cfs)	Description
0.4	46	0.0500	1.73		**Sheet Flow, Tc-1**
					Smooth surfaces n= 0.011 P2= 3.30"
0.3	102	0.0500	5.25	15.74	**Channel Flow, Tc-2**
					Area= 3.0 sf Perim= 9.2' r= 0.33'
					n= 0.030 Earth, grassed & winding
0.1	24	0.0625	3.75		**Shallow Concentrated Flow, Tc-3**
					Grassed Waterway Kv= 15.0 fps
0.8	172	Total			

Subcatchment 1S: Post Subcatchment 1

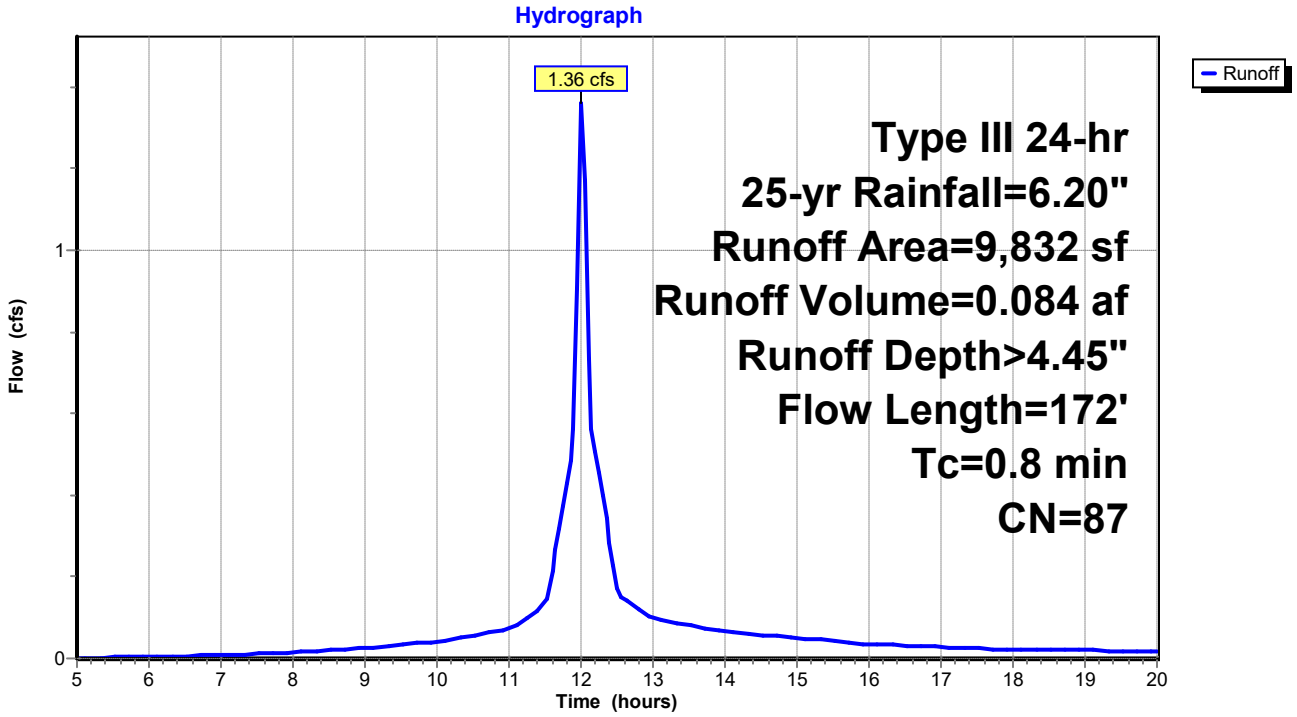

Summary for Subcatchment 2S: Post Subcatchment 2

Runoff = 1.28 cfs @ 12.05 hrs, Volume= 0.080 af, Depth> 3.62"
Routed to Link DP1 : DP1

Runoff by SCS TR-20 method, UH=SCS, Weighted-CN, Time Span= 5.00-20.00 hrs, dt= 0.05 hrs
Type III 24-hr 25-yr Rainfall=6.20"

Area (sf)	CN	Description
10,250	77	Woods, Good, HSG D
1,238	98	Paved parking, HSG D
11,488	79	Weighted Average
10,250		89.22% Pervious Area
1,238		10.78% Impervious Area

Tc (min)	Length (feet)	Slope (ft/ft)	Velocity (ft/sec)	Capacity (cfs)	Description
2.5	21	0.1905	0.14		**Sheet Flow, Tc-1** Woods: Light underbrush n= 0.400 P2= 3.30"
0.9	112	0.1696	2.06		**Shallow Concentrated Flow, Tc-2** Woodland Kv= 5.0 fps
3.4	133	Total			

Subcatchment 2S: Post Subcatchment 2

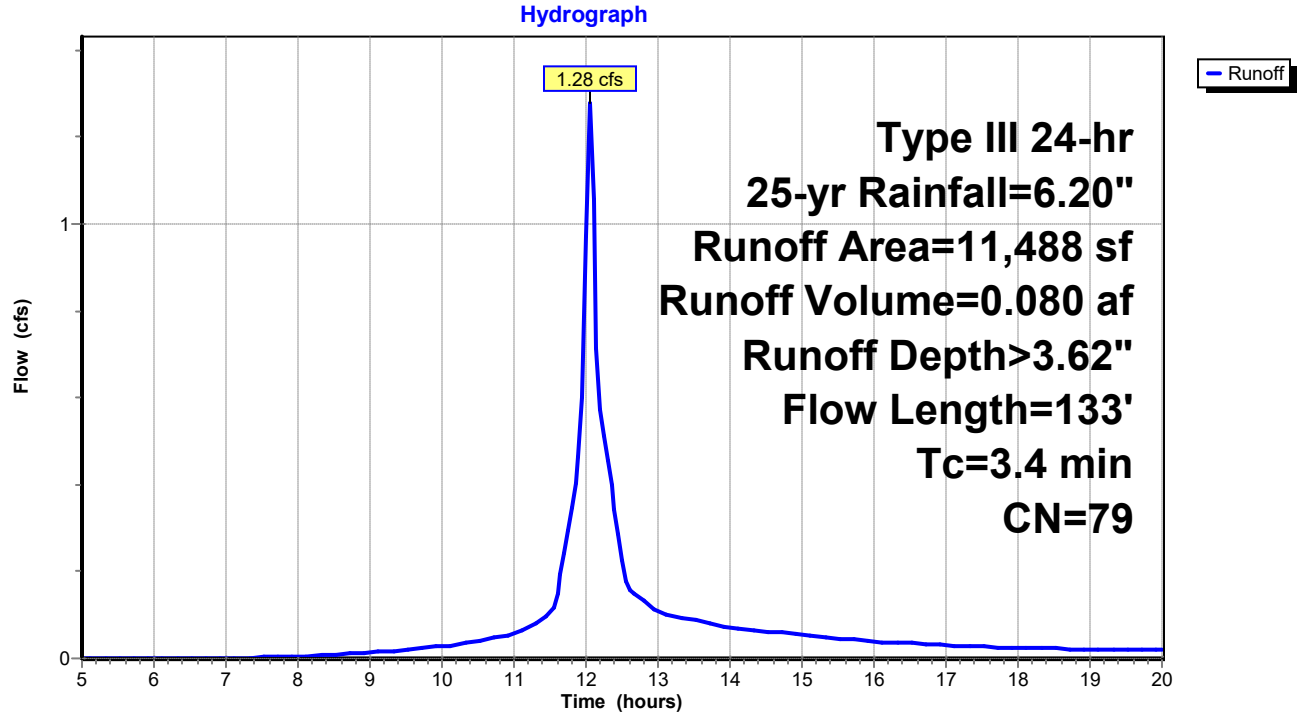

Summary for Subcatchment 3S: Post Subcatchment 3

Runoff = 1.57 cfs @ 12.07 hrs, Volume= 0.106 af, Depth> 4.13"
Routed to Pond 3P : Bioretention Filter Cell 2

Runoff by SCS TR-20 method, UH=SCS, Weighted-CN, Time Span= 5.00-20.00 hrs, dt= 0.05 hrs
Type III 24-hr 25-yr Rainfall=6.20"

	Area (sf)	CN	Description
	6,822	77	Woods, Good, HSG D
*	580	73	Biofiltration cell, Good, HSG D
*	3,768	98	Paved access drive, HSG D
	1,487	80	>75% Grass cover, Good, HSG D
*	708	98	Ledge, HSG D
	13,365	84	Weighted Average
	8,889		66.51% Pervious Area
	4,476		33.49% Impervious Area

Tc (min)	Length (feet)	Slope (ft/ft)	Velocity (ft/sec)	Capacity (cfs)	Description
4.2	43	0.2093	0.17		**Sheet Flow, Tc-1** Woods: Light underbrush n= 0.400 P2= 3.30"
0.7	214	0.0500	5.25	15.74	**Channel Flow, Tc-2** Area= 3.0 sf Perim= 9.2' r= 0.33' n= 0.030 Earth, grassed & winding
0.0	5	0.0500	3.35		**Shallow Concentrated Flow, Tc-3** Grassed Waterway Kv= 15.0 fps
4.9	262	Total			

Subcatchment 3S: Post Subcatchment 3

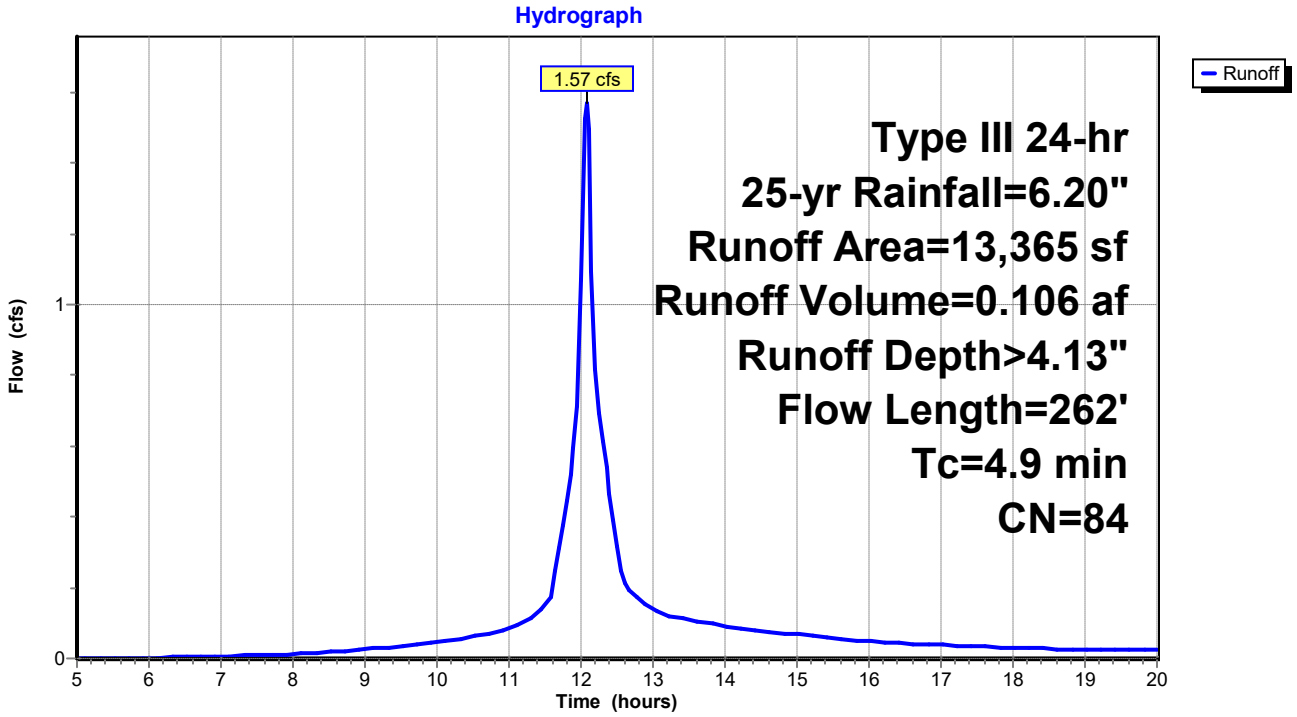

Summary for Subcatchment 4S: Post Subcatchment 4

Runoff = 1.72 cfs @ 12.11 hrs, Volume= 0.121 af, Depth> 3.61"
Routed to Link DP2 : DP2

Runoff by SCS TR-20 method, UH=SCS, Weighted-CN, Time Span= 5.00-20.00 hrs, dt= 0.05 hrs
Type III 24-hr 25-yr Rainfall=6.20"

	Area (sf)	CN	Description
*	295	98	Paved access drive, HSG D
	1,450	80	>75% Grass cover, Good, HSG D
	15,784	79	Woods, Fair, HSG D
	17,529	79	Weighted Average
	17,234		98.32% Pervious Area
	295		1.68% Impervious Area

Tc (min)	Length (feet)	Slope (ft/ft)	Velocity (ft/sec)	Capacity (cfs)	Description
6.8	62	0.1290	0.15		**Sheet Flow, Tc-1** Woods: Light underbrush n= 0.400 P2= 3.30"
0.4	64	0.2343	2.42		**Shallow Concentrated Flow, Tc-2** Woodland Kv= 5.0 fps
7.2	126	Total			

Subcatchment 4S: Post Subcatchment 4

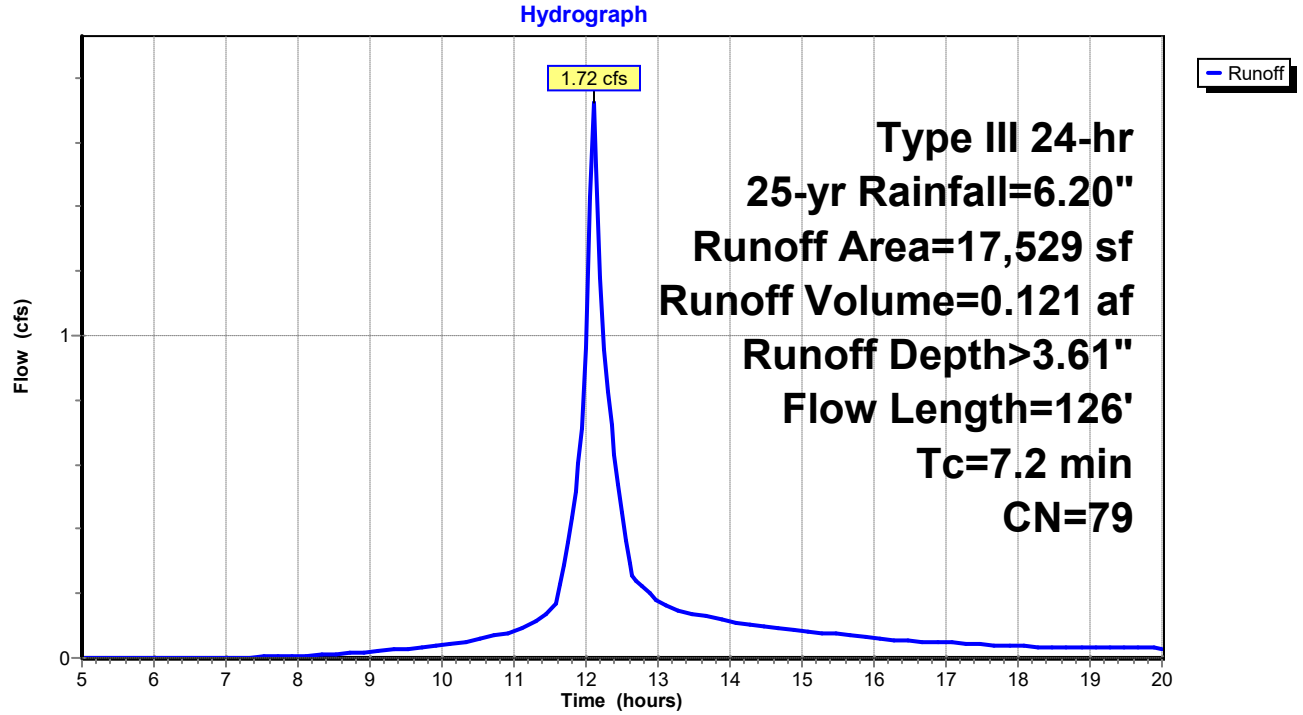

Summary for Subcatchment 5S: Post Subcatchment 5

Runoff = 5.99 cfs @ 12.10 hrs, Volume= 0.421 af, Depth> 3.72"
Routed to Reach DP3 : Shoreline 3

Runoff by SCS TR-20 method, UH=SCS, Weighted-CN, Time Span= 5.00-20.00 hrs, dt= 0.05 hrs
Type III 24-hr 25-yr Rainfall=6.20"

	Area (sf)	CN	Description
*	1,650	98	Paved acccess drive, HSG D
	751	98	Roofs, HSG D
*	6,955	88	Sand beach, HSG D
	3,872	96	Gravel surface, HSG D
	45,951	77	Woods, Good, HSG D
	59,179	80	Weighted Average
	56,778		95.94% Pervious Area
	2,401		4.06% Impervious Area

Tc (min)	Length (feet)	Slope (ft/ft)	Velocity (ft/sec)	Capacity (cfs)	Description
2.7	23	0.1740	0.14		**Sheet Flow, Tc-1** Woods: Light underbrush n= 0.400 P2= 3.30"
1.0	70	0.0574	1.20		**Shallow Concentrated Flow, Tc-2** Woodland Kv= 5.0 fps
0.5	170	0.1059	5.24		**Shallow Concentrated Flow, Tc-3** Unpaved Kv= 16.1 fps
2.5	140	0.0357	0.94		**Shallow Concentrated Flow, Tc-4** Woodland Kv= 5.0 fps
0.3	42	0.0714	2.67		**Shallow Concentrated Flow, Tc-5** Nearly Bare & Untilled Kv= 10.0 fps
7.0	445	Total			

Subcatchment 5S: Post Subcatchment 5

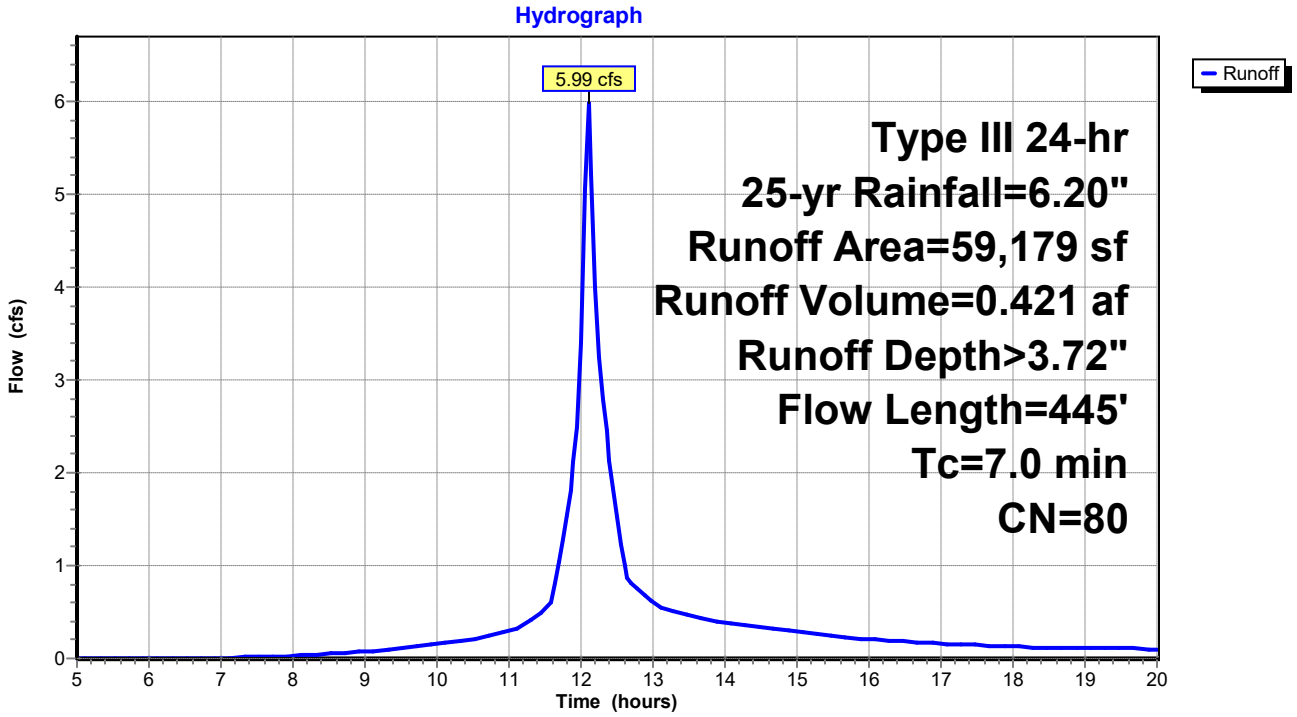

Summary for Reach 1R: Reach 1

Inflow Area = 0.226 ac, 50.01% Impervious, Inflow Depth > 4.39" for 25-yr event
Inflow = 1.33 cfs @ 12.02 hrs, Volume= 0.082 af
Outflow = 1.33 cfs @ 12.02 hrs, Volume= 0.082 af, Atten= 0%, Lag= 0.0 min
Routed to Link DP1 : DP1

Routing by Stor-Ind method, Time Span= 5.00-20.00 hrs, dt= 0.05 hrs

Reach 1R: Reach 1

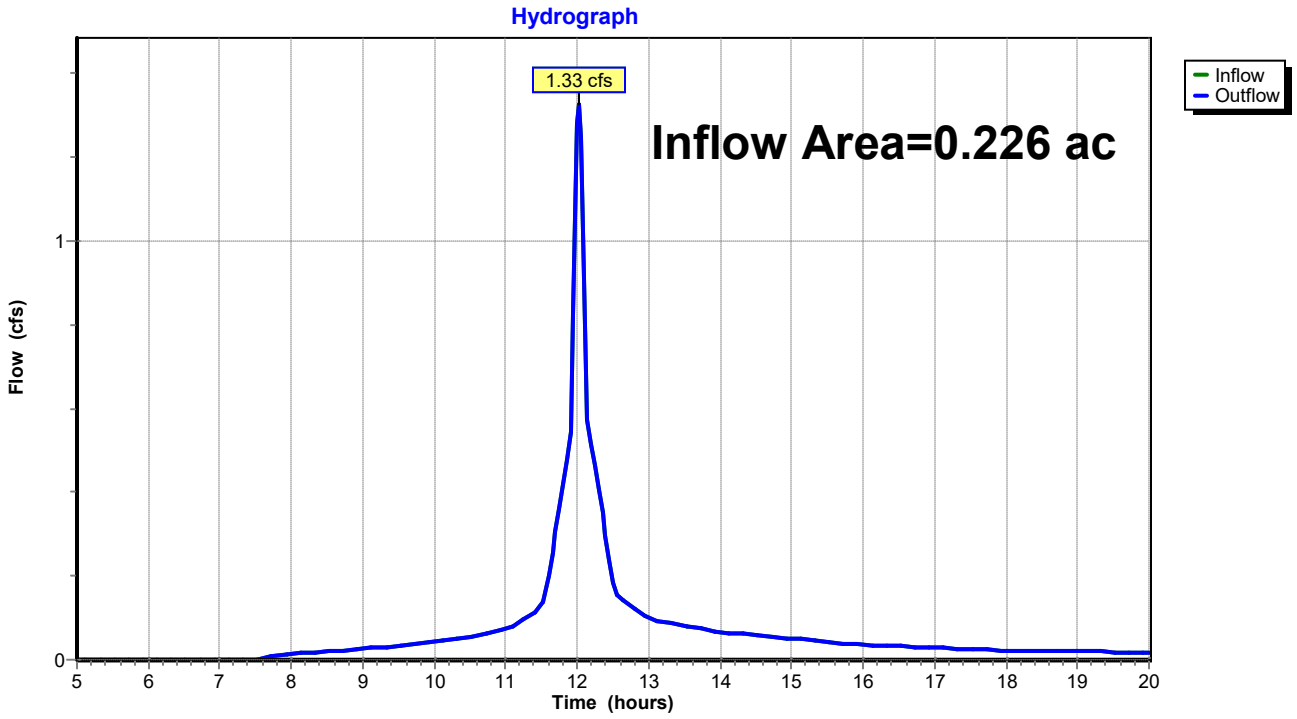

Summary for Reach 2R: Reach 2

Inflow Area = 0.307 ac, 33.49% Impervious, Inflow Depth > 3.99" for 25-yr event
Inflow = 1.50 cfs @ 12.11 hrs, Volume= 0.102 af
Outflow = 1.50 cfs @ 12.11 hrs, Volume= 0.102 af, Atten= 0%, Lag= 0.0 min
Routed to Link DP2 : DP2

Routing by Stor-Ind method, Time Span= 5.00-20.00 hrs, dt= 0.05 hrs

Reach 2R: Reach 2

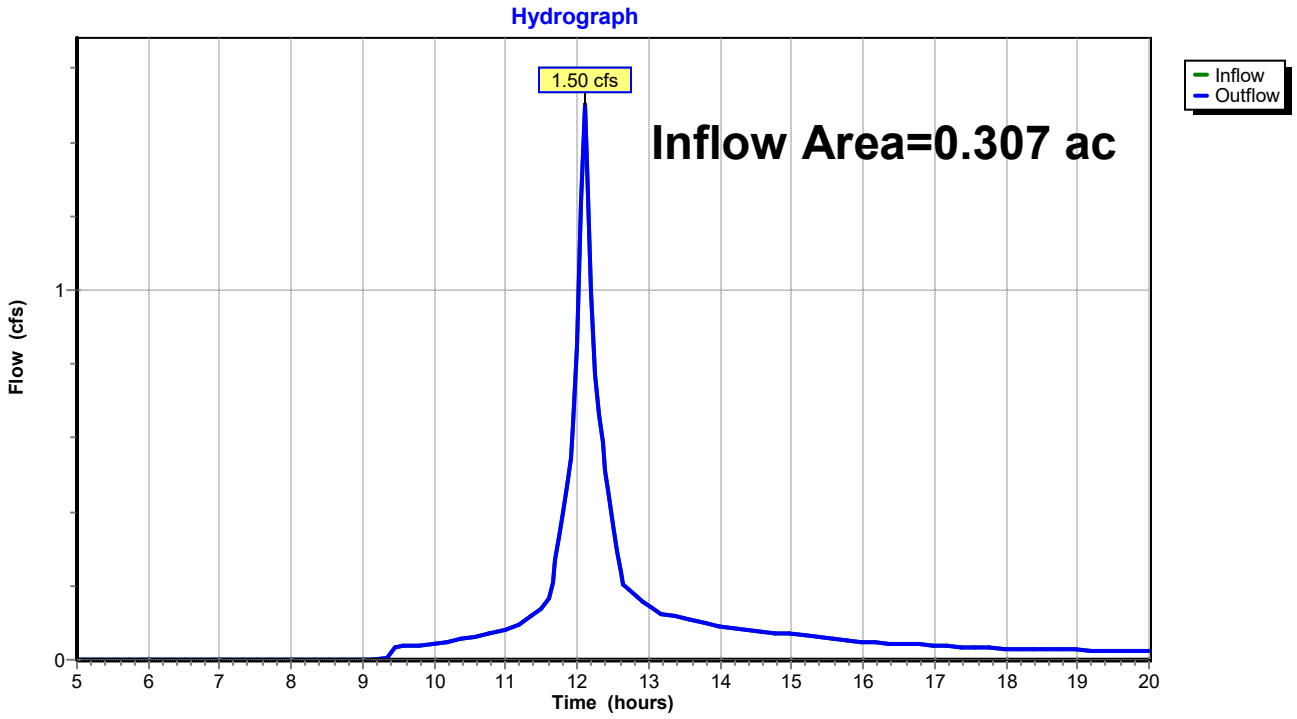

Summary for Reach DP3: Shoreline 3

Inflow Area = 1.359 ac, 4.06% Impervious, Inflow Depth > 3.72" for 25-yr event
Inflow = 5.99 cfs @ 12.10 hrs, Volume= 0.421 af
Outflow = 5.99 cfs @ 12.10 hrs, Volume= 0.421 af, Atten= 0%, Lag= 0.0 min
Routed to Reach SP1 : SACO RIVER / OCEAN

Routing by Stor-Ind method, Time Span= 5.00-20.00 hrs, dt= 0.05 hrs

Reach DP3: Shoreline 3

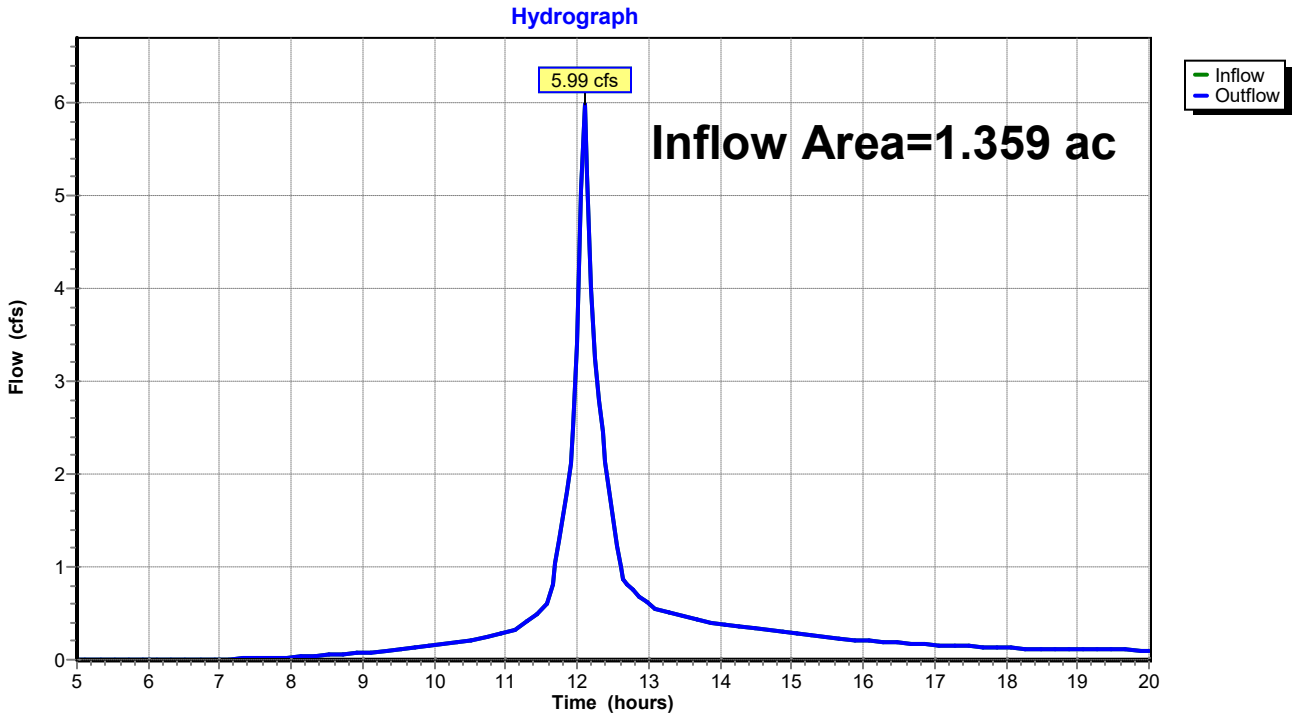

Summary for Reach SP1: SACO RIVER / OCEAN

Inflow Area = 2.557 ac, 11.96% Impervious, Inflow Depth > 3.78" for 25-yr event
Inflow = 11.09 cfs @ 12.09 hrs, Volume= 0.806 af
Outflow = 11.09 cfs @ 12.09 hrs, Volume= 0.806 af, Atten= 0%, Lag= 0.0 min

Routing by Stor-Ind method, Time Span= 5.00-20.00 hrs, dt= 0.05 hrs

Reach SP1: SACO RIVER / OCEAN

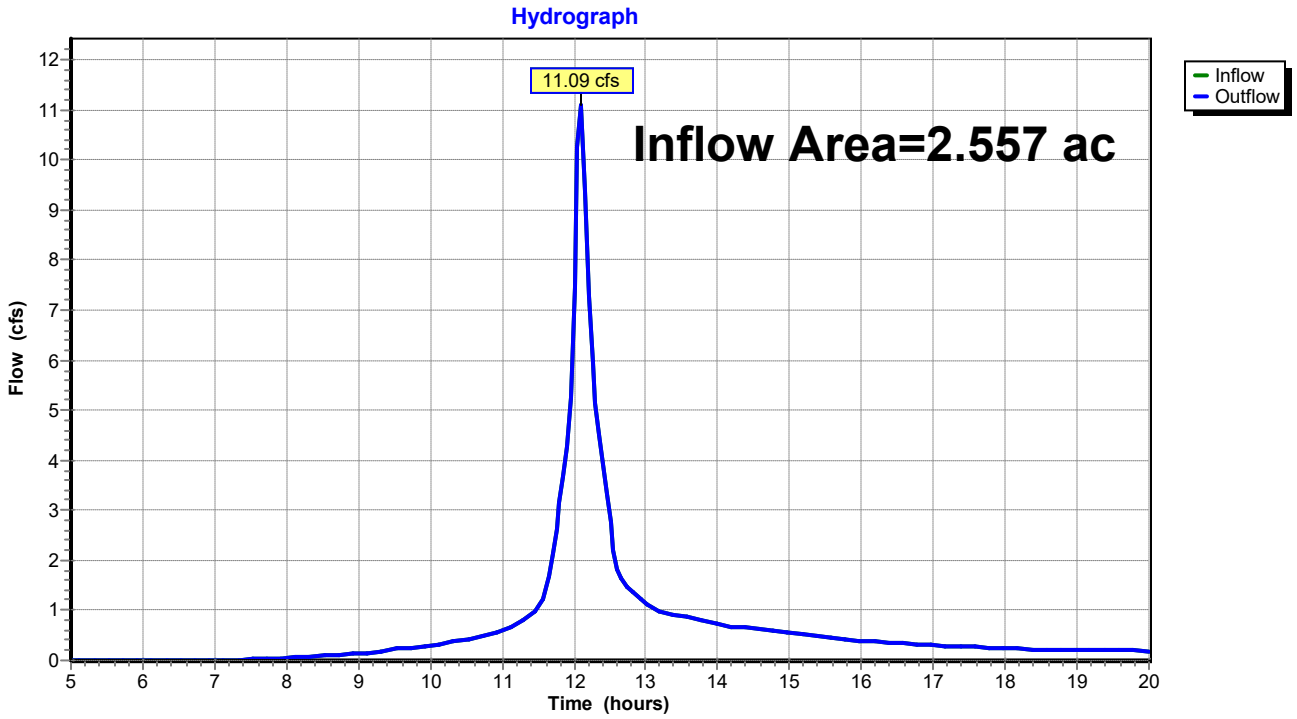

Summary for Pond 1P: Bioretention Filter Cell 1

Inflow Area = 0.226 ac, 50.01% Impervious, Inflow Depth > 4.45" for 25-yr event
Inflow = 1.36 cfs @ 12.01 hrs, Volume= 0.084 af
Outflow = 1.33 cfs @ 12.02 hrs, Volume= 0.082 af, Atten= 2%, Lag= 0.6 min
Primary = 1.33 cfs @ 12.02 hrs, Volume= 0.082 af
Routed to Pond 2P : CB-1

Routing by Stor-Ind method, Time Span= 5.00-20.00 hrs, dt= 0.05 hrs
Peak Elev= 18.20' @ 12.02 hrs Surf.Area= 275 sf Storage= 101 cf

Plug-Flow detention time= 12.6 min calculated for 0.082 af (98% of inflow)
Center-of-Mass det. time= 6.1 min (765.1 - 758.9)

Volume	Invert	Avail.Storage	Storage Description
#1	17.50'	200 cf	**Custom Stage Data (Prismatic)** Listed below (Recalc)

Elevation (feet)	Surf.Area (sq-ft)	Inc.Store (cubic-feet)	Cum.Store (cubic-feet)
17.50	0	0	0
18.00	213	53	53
18.50	372	146	200

Device	Routing	Invert	Outlet Devices
#1	Primary	18.00'	**18.0" Horiz. Orifice/Grate** C= 0.600 in 24.0" Grate (56% open area) Limited to weir flow at low heads

Primary OutFlow Max=1.27 cfs @ 12.02 hrs HW=18.19' (Free Discharge)
↑—**1=Orifice/Grate** (Weir Controls 1.27 cfs @ 1.42 fps)

Pond 1P: Bioretention Filter Cell 1

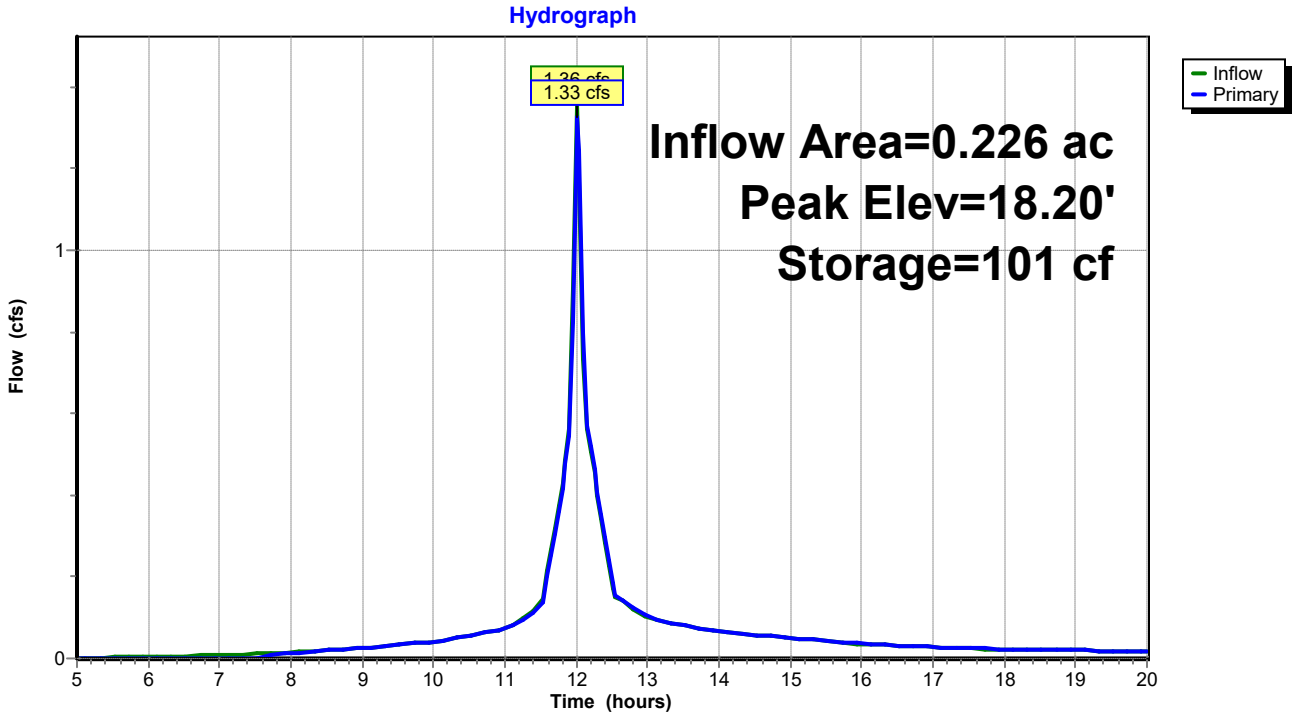

Summary for Pond 2P: CB-1

Inflow Area = 0.226 ac, 50.01% Impervious, Inflow Depth > 4.39" for 25-yr event
Inflow = 1.33 cfs @ 12.02 hrs, Volume= 0.082 af
Outflow = 1.33 cfs @ 12.02 hrs, Volume= 0.082 af, Atten= 0%, Lag= 0.0 min
Primary = 1.33 cfs @ 12.02 hrs, Volume= 0.082 af
Routed to Reach 1R : Reach 1

Routing by Stor-Ind method, Time Span= 5.00-20.00 hrs, dt= 0.05 hrs
Peak Elev= 14.38' @ 12.02 hrs

Device	Routing	Invert	Outlet Devices
#1	Primary	13.75'	**15.0" Round Culvert** L= 48.0' CPP, projecting, no headwall, Ke= 0.900 Inlet / Outlet Invert= 13.75' / 12.00' S= 0.0365 '/' Cc= 0.900 n= 0.013 Corrugated PE, smooth interior, Flow Area= 1.23 sf

Primary OutFlow Max=1.27 cfs @ 12.02 hrs HW=14.36' (Free Discharge)
1=Culvert (Inlet Controls 1.27 cfs @ 2.11 fps)

Pond 2P: CB-1

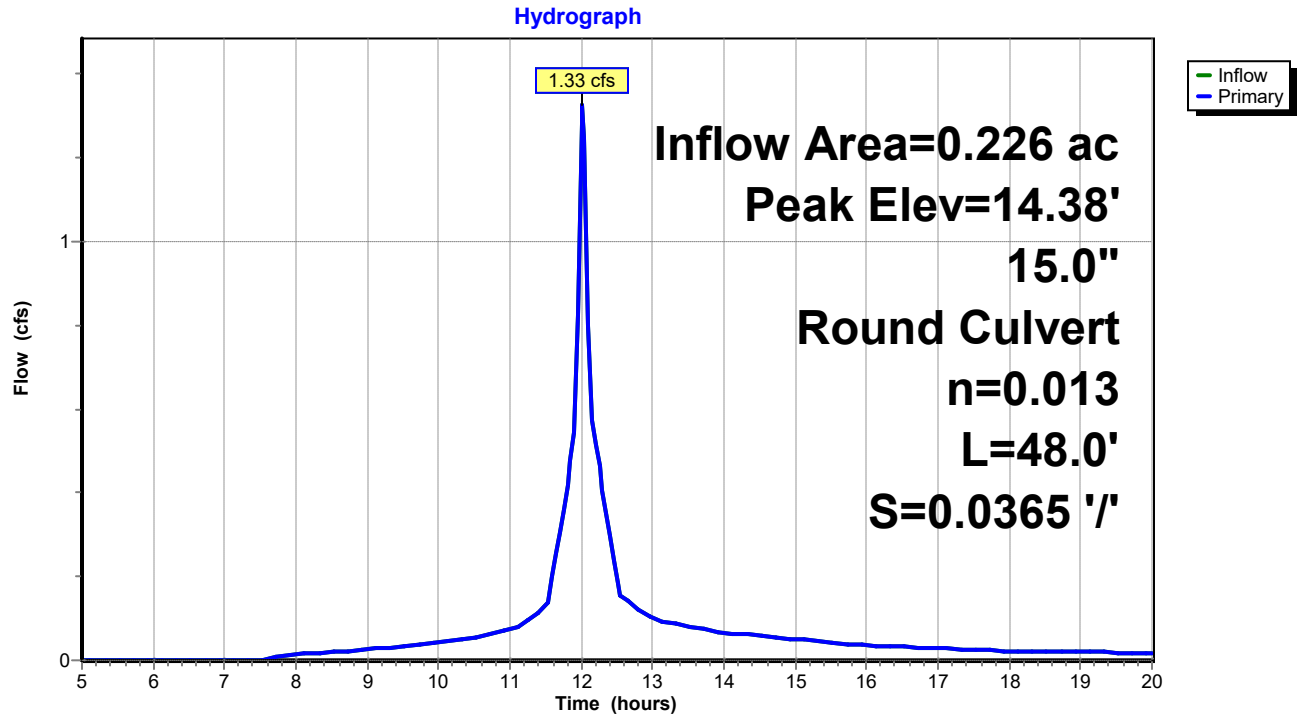

Summary for Pond 3P: Bioretention Filter Cell 2

Inflow Area = 0.307 ac, 33.49% Impervious, Inflow Depth > 4.13" for 25-yr event
Inflow = 1.57 cfs @ 12.07 hrs, Volume= 0.106 af
Outflow = 1.56 cfs @ 12.08 hrs, Volume= 0.105 af, Atten= 1%, Lag= 0.6 min
Primary = 1.56 cfs @ 12.08 hrs, Volume= 0.105 af
Routed to Pond 4P : CB-2

Routing by Stor-Ind method, Time Span= 5.00-20.00 hrs, dt= 0.05 hrs
Peak Elev= 23.72' @ 12.08 hrs Surf.Area= 240 sf Storage= 86 cf

Plug-Flow detention time= 7.6 min calculated for 0.104 af (99% of inflow)
Center-of-Mass det. time= 3.8 min (773.5 - 769.7)

Volume	Invert	Avail.Storage	Storage Description
#1	23.00'	380 cf	**Custom Stage Data (Prismatic)** Listed below (Recalc)

Elevation (feet)	Surf.Area (sq-ft)	Inc.Store (cubic-feet)	Cum.Store (cubic-feet)
23.00	0	0	0
24.00	335	168	168
24.50	515	213	380

Device	Routing	Invert	Outlet Devices
#1	Primary	23.50'	**18.0" Horiz. Orifice/Grate** C= 0.600 in 24.0" Grate (56% open area) Limited to weir flow at low heads

Primary OutFlow Max=1.51 cfs @ 12.08 hrs HW=23.71' (Free Discharge)
1=Orifice/Grate (Weir Controls 1.51 cfs @ 1.51 fps)

Pond 3P: Bioretention Filter Cell 2

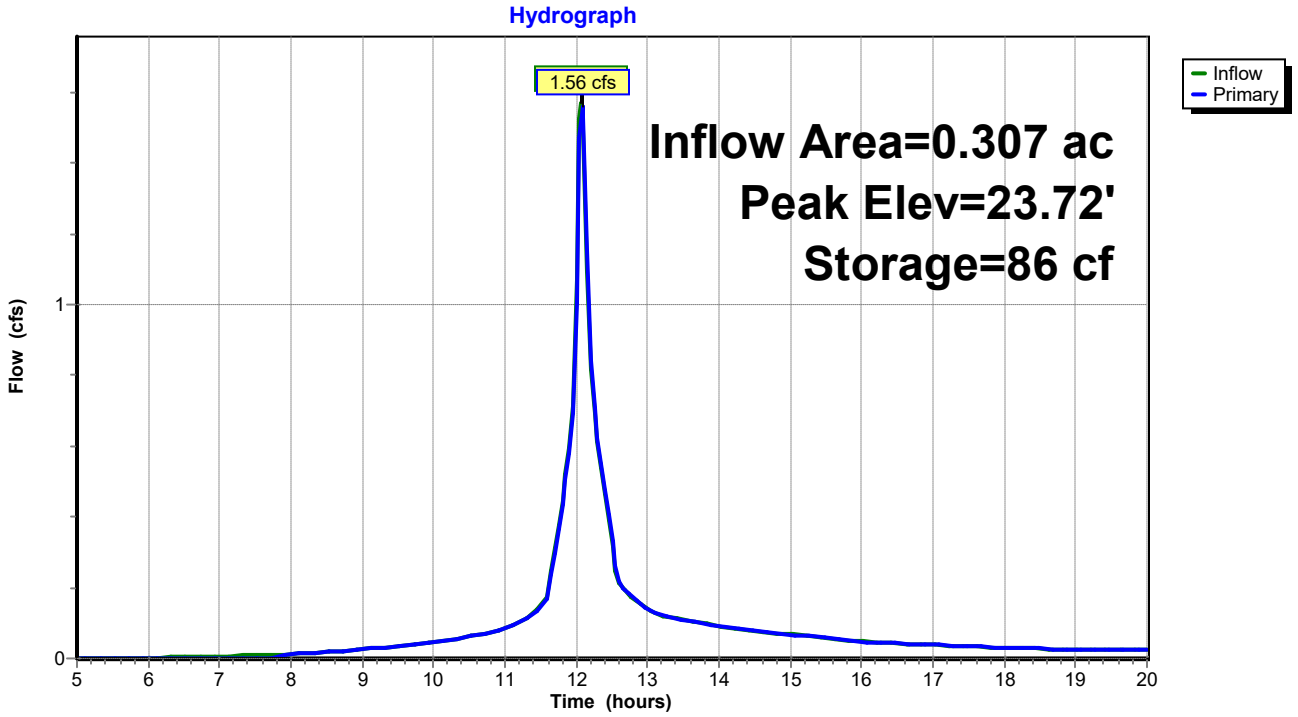

Summary for Pond 4P: CB-2

Inflow Area = 0.307 ac, 33.49% Impervious, Inflow Depth > 4.09" for 25-yr event
Inflow = 1.56 cfs @ 12.08 hrs, Volume= 0.105 af
Outflow = 1.56 cfs @ 12.08 hrs, Volume= 0.105 af, Atten= 0%, Lag= 0.0 min
Primary = 1.56 cfs @ 12.08 hrs, Volume= 0.105 af
Routed to Pond 5P : Level Lip Speader

Routing by Stor-Ind method, Time Span= 5.00-20.00 hrs, dt= 0.05 hrs
Peak Elev= 19.39' @ 12.08 hrs

Device	Routing	Invert	Outlet Devices
#1	Primary	18.75'	**18.0" Round Culvert** L= 40.0' CPP, projecting, no headwall, Ke= 0.900 Inlet / Outlet Invert= 18.75' / 18.00' S= 0.0187 '/' Cc= 0.900 n= 0.013 Corrugated PE, smooth interior, Flow Area= 1.77 sf

Primary OutFlow Max=1.51 cfs @ 12.08 hrs HW=19.38' (Free Discharge)
1=Culvert (Inlet Controls 1.51 cfs @ 2.13 fps)

Pond 4P: CB-2

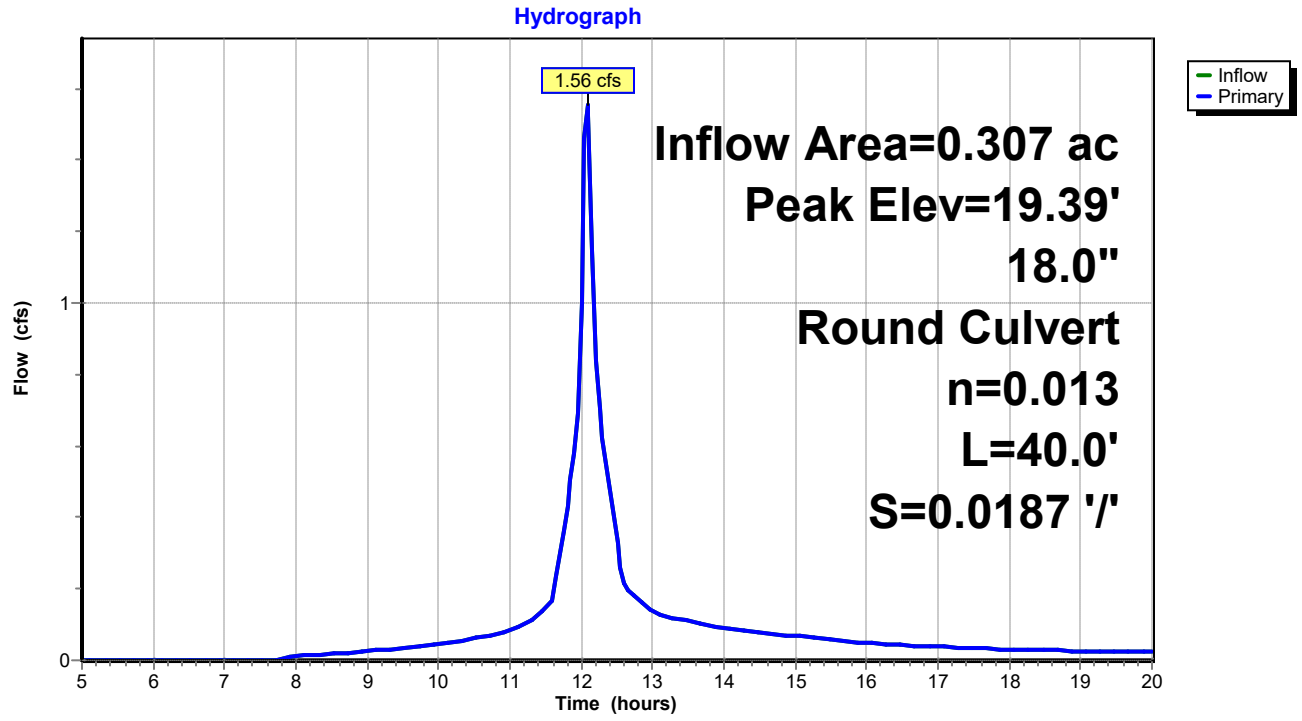

Summary for Pond 5P: Level Lip Speader

Inflow Area = 0.307 ac, 33.49% Impervious, Inflow Depth > 4.09" for 25-yr event
Inflow = 1.56 cfs @ 12.08 hrs, Volume= 0.105 af
Outflow = 1.50 cfs @ 12.11 hrs, Volume= 0.102 af, Atten= 4%, Lag= 1.4 min
Primary = 1.50 cfs @ 12.11 hrs, Volume= 0.102 af
Routed to Reach 2R : Reach 2

Routing by Stor-Ind method, Time Span= 5.00-20.00 hrs, dt= 0.05 hrs
Peak Elev= 18.00' @ 9.40 hrs Surf.Area= 168 sf Storage= 115 cf
Flood Elev= 20.00' Surf.Area= 168 sf Storage= 115 cf

Plug-Flow detention time= 17.8 min calculated for 0.102 af (97% of inflow)
Center-of-Mass det. time= 7.7 min (781.2 - 773.5)

Volume	Invert	Avail.Storage	Storage Description
#1	17.00'	115 cf	**Custom Stage Data (Prismatic)** Listed below (Recalc)

Elevation (feet)	Surf.Area (sq-ft)	Voids (%)	Inc.Store (cubic-feet)	Cum.Store (cubic-feet)
17.00	61	0.0	0	0
18.00	168	100.0	115	115

Device	Routing	Invert	Outlet Devices
#0	Primary	18.00'	**Automatic Storage Overflow** (Discharged without head)

Primary OutFlow Max=0.00 cfs @ 12.11 hrs HW=18.00' (Free Discharge)

Pond 5P: Level Lip Speader

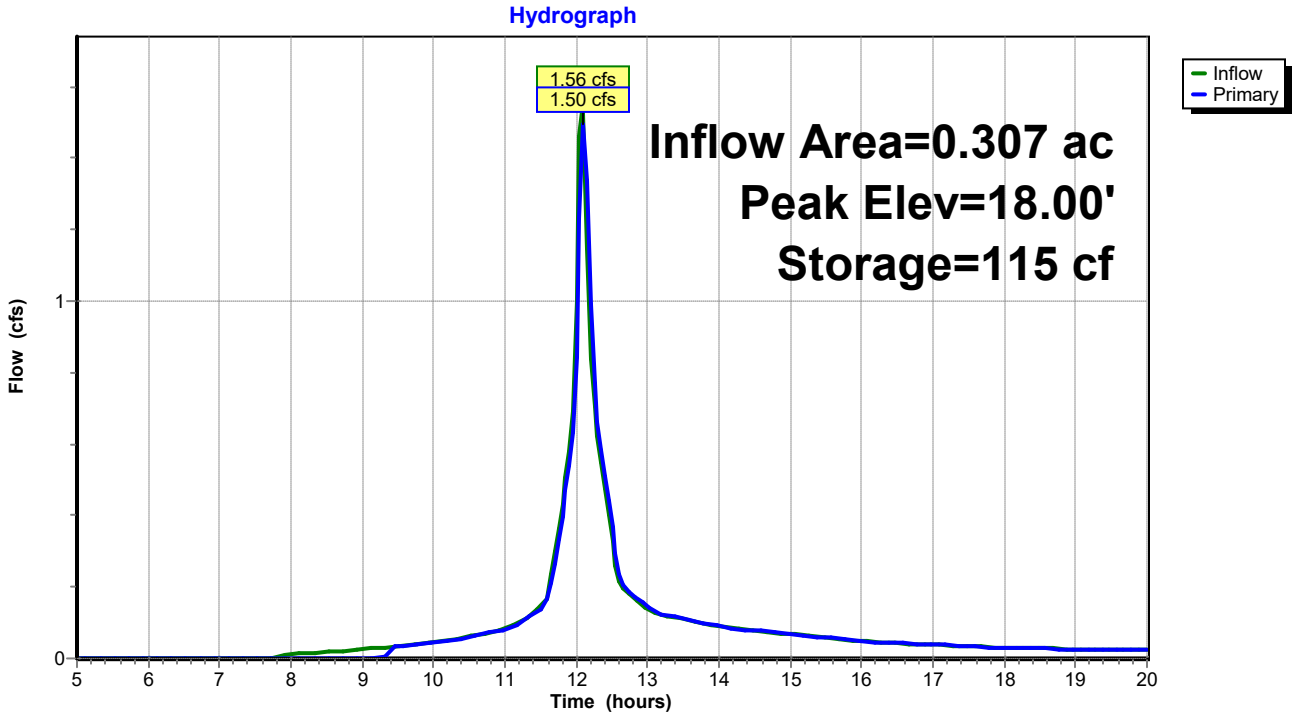

Summary for Link DP1: DP1

Inflow Area = 0.489 ac, 28.87% Impervious, Inflow Depth > 3.97" for 25-yr event
Inflow = 2.54 cfs @ 12.04 hrs, Volume= 0.162 af
Primary = 2.54 cfs @ 12.04 hrs, Volume= 0.162 af, Atten= 0%, Lag= 0.0 min
Routed to Reach SP1 : SACO RIVER / OCEAN

Primary outflow = Inflow, Time Span= 5.00-20.00 hrs, dt= 0.05 hrs

Link DP1: DP1

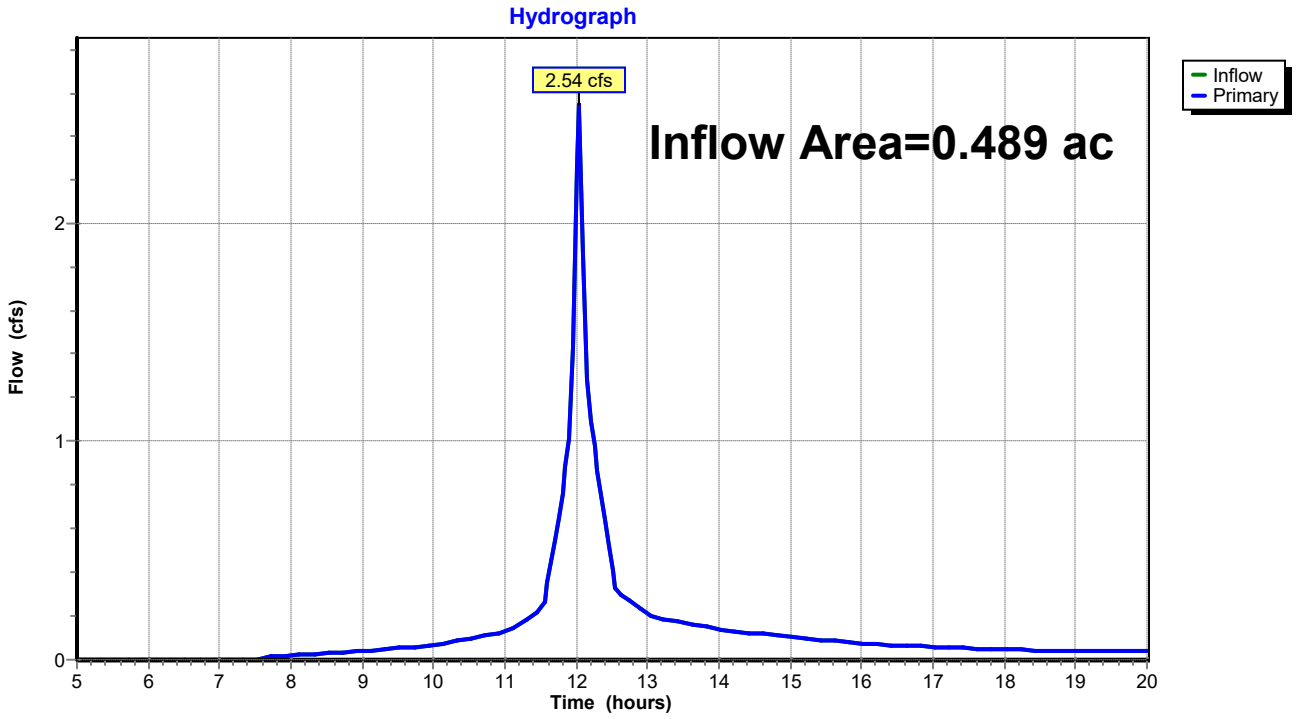

Summary for Link DP2: DP2

Inflow Area = 0.709 ac, 15.44% Impervious, Inflow Depth > 3.77" for 25-yr event
Inflow = 3.22 cfs @ 12.11 hrs, Volume= 0.223 af
Primary = 3.22 cfs @ 12.11 hrs, Volume= 0.223 af, Atten= 0%, Lag= 0.0 min
Routed to Reach SP1 : SACO RIVER / OCEAN

Primary outflow = Inflow, Time Span= 5.00-20.00 hrs, dt= 0.05 hrs

Link DP2: DP2

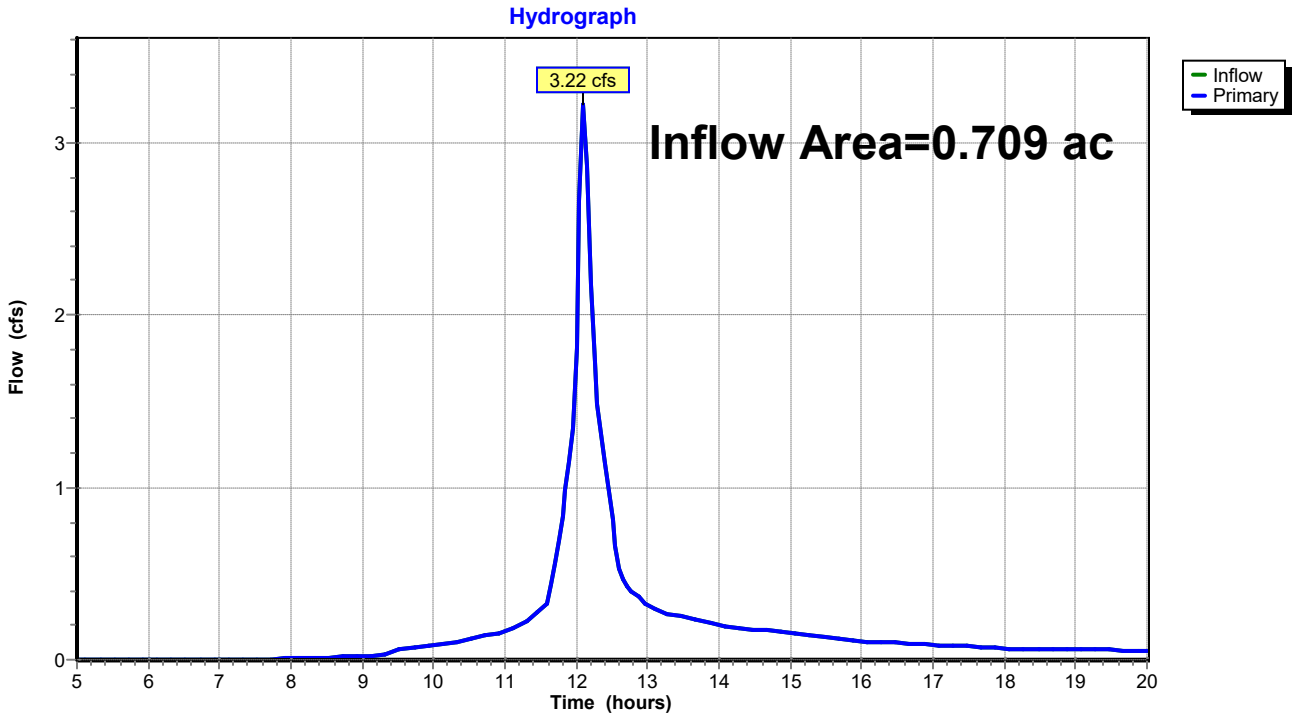

Time span=5.00-20.00 hrs, dt=0.05 hrs, 301 points
Runoff by SCS TR-20 method, UH=SCS, Weighted-CN
Reach routing by Stor-Ind method - Pond routing by Stor-Ind method

Subcatchment 1S: Post Subcatchment 1 Runoff Area=9,832 sf 50.01% Impervious Runoff Depth>6.75"
Flow Length=172' Tc=0.8 min CN=87 Runoff=2.01 cfs 0.127 af

Subcatchment 2S: Post Subcatchment 2 Runoff Area=11,488 sf 10.78% Impervious Runoff Depth>5.81"
Flow Length=133' Tc=3.4 min CN=79 Runoff=2.01 cfs 0.128 af

Subcatchment 3S: Post Subcatchment 3 Runoff Area=13,365 sf 33.49% Impervious Runoff Depth>6.40"
Flow Length=262' Tc=4.9 min CN=84 Runoff=2.37 cfs 0.164 af

Subcatchment 4S: Post Subcatchment 4 Runoff Area=17,529 sf 1.68% Impervious Runoff Depth>5.80"
Flow Length=126' Tc=7.2 min CN=79 Runoff=2.71 cfs 0.195 af

Subcatchment 5S: Post Subcatchment 5 Runoff Area=59,179 sf 4.06% Impervious Runoff Depth>5.92"
Flow Length=445' Tc=7.0 min CN=80 Runoff=9.35 cfs 0.670 af

Reach 1R: Reach 1 Inflow=1.97 cfs 0.126 af
Outflow=1.97 cfs 0.126 af

Reach 2R: Reach 2 Inflow=2.27 cfs 0.160 af
Outflow=2.27 cfs 0.160 af

Reach DP3: Shoreline 3 Inflow=9.35 cfs 0.670 af
Outflow=9.35 cfs 0.670 af

Reach SP1: SACO RIVER / OCEAN Inflow=17.21 cfs 1.278 af
Outflow=17.21 cfs 1.278 af

Pond 1P: Bioretention Filter Cell 1 Peak Elev=18.25' Storage=118 cf Inflow=2.01 cfs 0.127 af
Outflow=1.97 cfs 0.126 af

Pond 2P: CB-1 Peak Elev=14.54' Inflow=1.97 cfs 0.126 af
15.0" Round Culvert n=0.013 L=48.0' S=0.0365 '/' Outflow=1.97 cfs 0.126 af

Pond 3P: Bioretention Filter Cell 2 Peak Elev=23.79' Storage=103 cf Inflow=2.37 cfs 0.164 af
Outflow=2.35 cfs 0.163 af

Pond 4P: CB-2 Peak Elev=19.56' Inflow=2.35 cfs 0.163 af
18.0" Round Culvert n=0.013 L=40.0' S=0.0187 '/' Outflow=2.35 cfs 0.163 af

Pond 5P: Level Lip Speader Peak Elev=18.00' Storage=115 cf Inflow=2.35 cfs 0.163 af
Outflow=2.27 cfs 0.160 af

Link DP1: DP1 Inflow=3.88 cfs 0.253 af
Primary=3.88 cfs 0.253 af

Link DP2: DP2 Inflow=4.98 cfs 0.354 af
Primary=4.98 cfs 0.354 af

Total Runoff Area = 2.557 ac Runoff Volume = 1.283 af Average Runoff Depth = 6.02"
88.04% Pervious = 2.251 ac 11.96% Impervious = 0.306 ac

Summary for Subcatchment 1S: Post Subcatchment 1

Runoff = 2.01 cfs @ 12.01 hrs, Volume= 0.127 af, Depth> 6.75"
Routed to Pond 1P : Bioretention Filter Cell 1

Runoff by SCS TR-20 method, UH=SCS, Weighted-CN, Time Span= 5.00-20.00 hrs, dt= 0.05 hrs
Type III 24-hr 100-yr Rainfall=8.70"

	Area (sf)	CN	Description
	3,430	77	Woods, Good, HSG D
*	982	98	Ledge, HSG D
	595	80	>75% Grass cover, Good, HSG D
*	3,935	98	Paved Access Drive, HSG D
*	890	73	Bioretention Filter Cell, Good, HSG D
	9,832	87	Weighted Average
	4,915		49.99% Pervious Area
	4,917		50.01% Impervious Area

Tc (min)	Length (feet)	Slope (ft/ft)	Velocity (ft/sec)	Capacity (cfs)	Description
0.4	46	0.0500	1.73		**Sheet Flow, Tc-1** Smooth surfaces n= 0.011 P2= 3.30"
0.3	102	0.0500	5.25	15.74	**Channel Flow, Tc-2** Area= 3.0 sf Perim= 9.2' r= 0.33' n= 0.030 Earth, grassed & winding
0.1	24	0.0625	3.75		**Shallow Concentrated Flow, Tc-3** Grassed Waterway Kv= 15.0 fps
0.8	172	Total			

Subcatchment 1S: Post Subcatchment 1

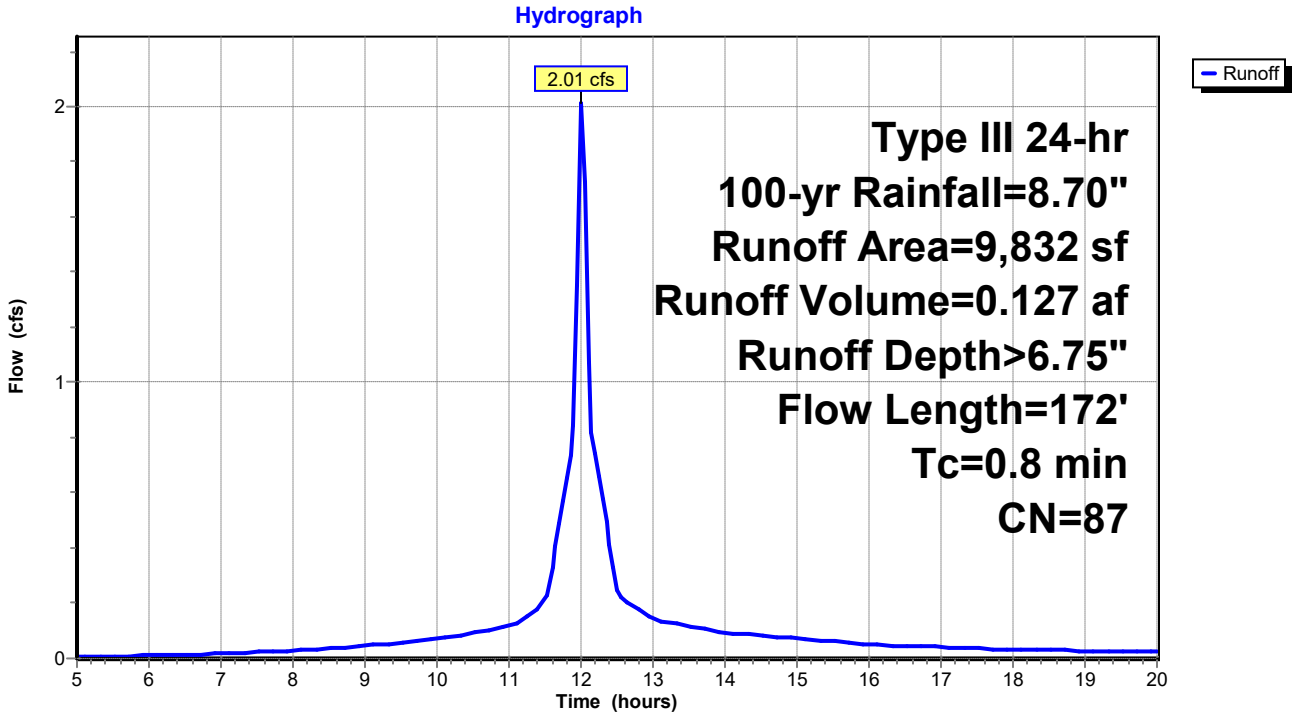

Summary for Subcatchment 2S: Post Subcatchment 2

Runoff = 2.01 cfs @ 12.05 hrs, Volume= 0.128 af, Depth> 5.81"
Routed to Link DP1 : DP1

Runoff by SCS TR-20 method, UH=SCS, Weighted-CN, Time Span= 5.00-20.00 hrs, dt= 0.05 hrs
Type III 24-hr 100-yr Rainfall=8.70"

Area (sf)	CN	Description
10,250	77	Woods, Good, HSG D
1,238	98	Paved parking, HSG D
11,488	79	Weighted Average
10,250		89.22% Pervious Area
1,238		10.78% Impervious Area

Tc (min)	Length (feet)	Slope (ft/ft)	Velocity (ft/sec)	Capacity (cfs)	Description
2.5	21	0.1905	0.14		**Sheet Flow, Tc-1** Woods: Light underbrush n= 0.400 P2= 3.30"
0.9	112	0.1696	2.06		**Shallow Concentrated Flow, Tc-2** Woodland Kv= 5.0 fps
3.4	133	Total			

Subcatchment 2S: Post Subcatchment 2

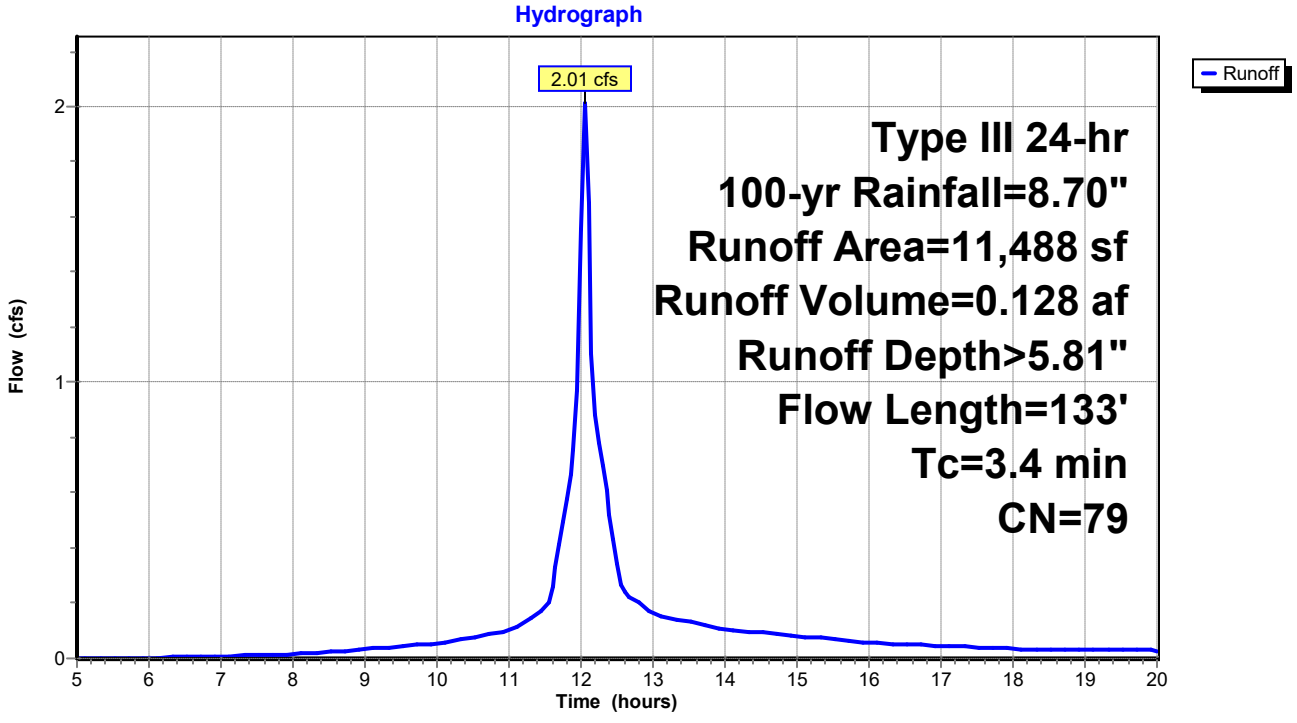

Summary for Subcatchment 3S: Post Subcatchment 3

Runoff = 2.37 cfs @ 12.07 hrs, Volume= 0.164 af, Depth> 6.40"
Routed to Pond 3P : Bioretention Filter Cell 2

Runoff by SCS TR-20 method, UH=SCS, Weighted-CN, Time Span= 5.00-20.00 hrs, dt= 0.05 hrs
Type III 24-hr 100-yr Rainfall=8.70"

	Area (sf)	CN	Description
	6,822	77	Woods, Good, HSG D
*	580	73	Biofiltration cell, Good, HSG D
*	3,768	98	Paved access drive, HSG D
	1,487	80	>75% Grass cover, Good, HSG D
*	708	98	Ledge, HSG D
	13,365	84	Weighted Average
	8,889		66.51% Pervious Area
	4,476		33.49% Impervious Area

Tc (min)	Length (feet)	Slope (ft/ft)	Velocity (ft/sec)	Capacity (cfs)	Description
4.2	43	0.2093	0.17		**Sheet Flow, Tc-1** Woods: Light underbrush n= 0.400 P2= 3.30"
0.7	214	0.0500	5.25	15.74	**Channel Flow, Tc-2** Area= 3.0 sf Perim= 9.2' r= 0.33' n= 0.030 Earth, grassed & winding
0.0	5	0.0500	3.35		**Shallow Concentrated Flow, Tc-3** Grassed Waterway Kv= 15.0 fps
4.9	262	Total			

Subcatchment 3S: Post Subcatchment 3

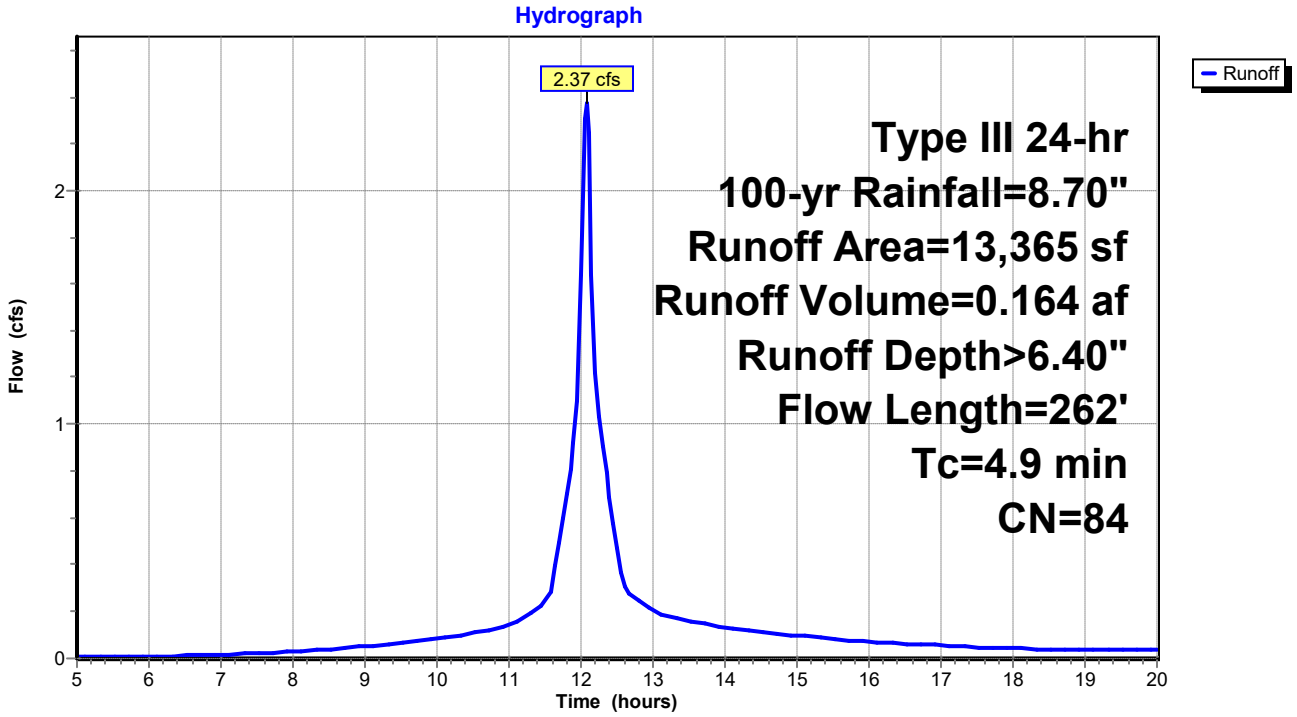

Summary for Subcatchment 4S: Post Subcatchment 4

Runoff = 2.71 cfs @ 12.10 hrs, Volume= 0.195 af, Depth> 5.80"
Routed to Link DP2 : DP2

Runoff by SCS TR-20 method, UH=SCS, Weighted-CN, Time Span= 5.00-20.00 hrs, dt= 0.05 hrs
Type III 24-hr 100-yr Rainfall=8.70"

	Area (sf)	CN	Description
*	295	98	Paved access drive, HSG D
	1,450	80	>75% Grass cover, Good, HSG D
	15,784	79	Woods, Fair, HSG D
	17,529	79	Weighted Average
	17,234		98.32% Pervious Area
	295		1.68% Impervious Area

Tc (min)	Length (feet)	Slope (ft/ft)	Velocity (ft/sec)	Capacity (cfs)	Description
6.8	62	0.1290	0.15		**Sheet Flow, Tc-1** Woods: Light underbrush n= 0.400 P2= 3.30"
0.4	64	0.2343	2.42		**Shallow Concentrated Flow, Tc-2** Woodland Kv= 5.0 fps
7.2	126	Total			

Subcatchment 4S: Post Subcatchment 4

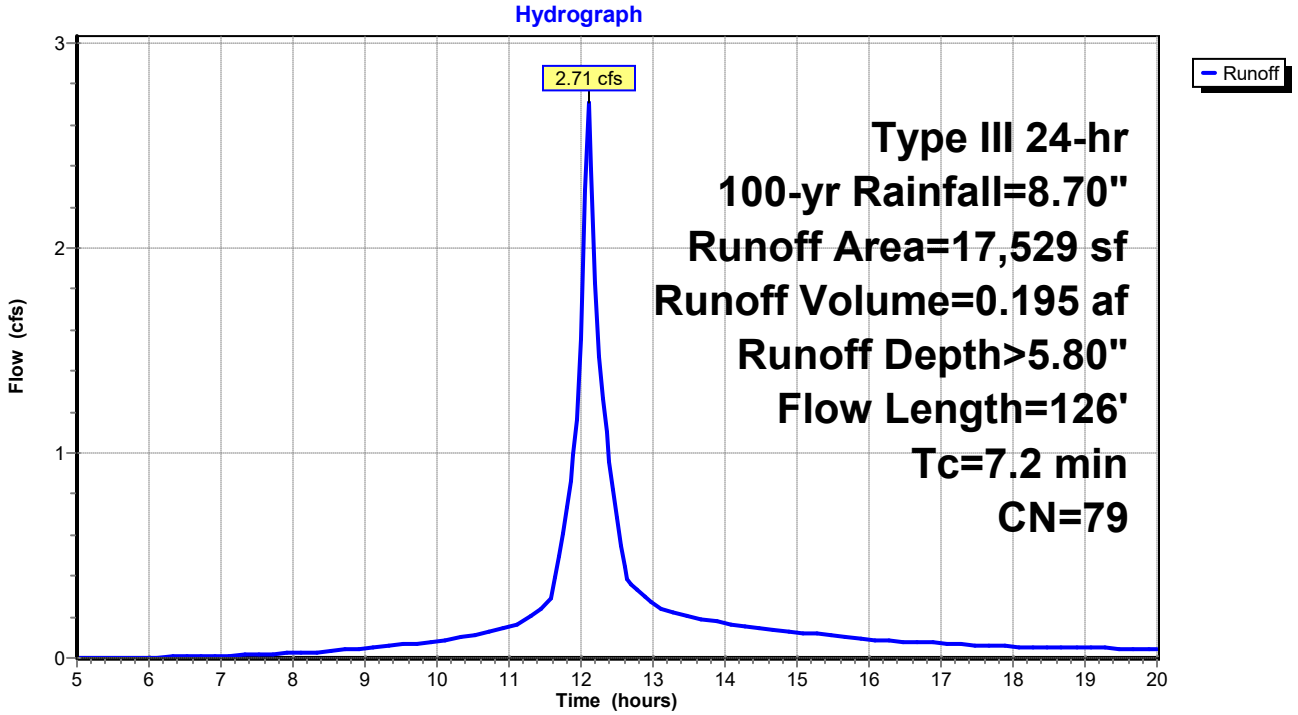

Summary for Subcatchment 5S: Post Subcatchment 5

Runoff = 9.35 cfs @ 12.10 hrs, Volume= 0.670 af, Depth> 5.92"
Routed to Reach DP3 : Shoreline 3

Runoff by SCS TR-20 method, UH=SCS, Weighted-CN, Time Span= 5.00-20.00 hrs, dt= 0.05 hrs
Type III 24-hr 100-yr Rainfall=8.70"

	Area (sf)	CN	Description
*	1,650	98	Paved acccess drive, HSG D
	751	98	Roofs, HSG D
*	6,955	88	Sand beach, HSG D
	3,872	96	Gravel surface, HSG D
	45,951	77	Woods, Good, HSG D
	59,179	80	Weighted Average
	56,778		95.94% Pervious Area
	2,401		4.06% Impervious Area

Tc (min)	Length (feet)	Slope (ft/ft)	Velocity (ft/sec)	Capacity (cfs)	Description
2.7	23	0.1740	0.14		**Sheet Flow, Tc-1** Woods: Light underbrush n= 0.400 P2= 3.30"
1.0	70	0.0574	1.20		**Shallow Concentrated Flow, Tc-2** Woodland Kv= 5.0 fps
0.5	170	0.1059	5.24		**Shallow Concentrated Flow, Tc-3** Unpaved Kv= 16.1 fps
2.5	140	0.0357	0.94		**Shallow Concentrated Flow, Tc-4** Woodland Kv= 5.0 fps
0.3	42	0.0714	2.67		**Shallow Concentrated Flow, Tc-5** Nearly Bare & Untilled Kv= 10.0 fps
7.0	445	Total			

Subcatchment 5S: Post Subcatchment 5

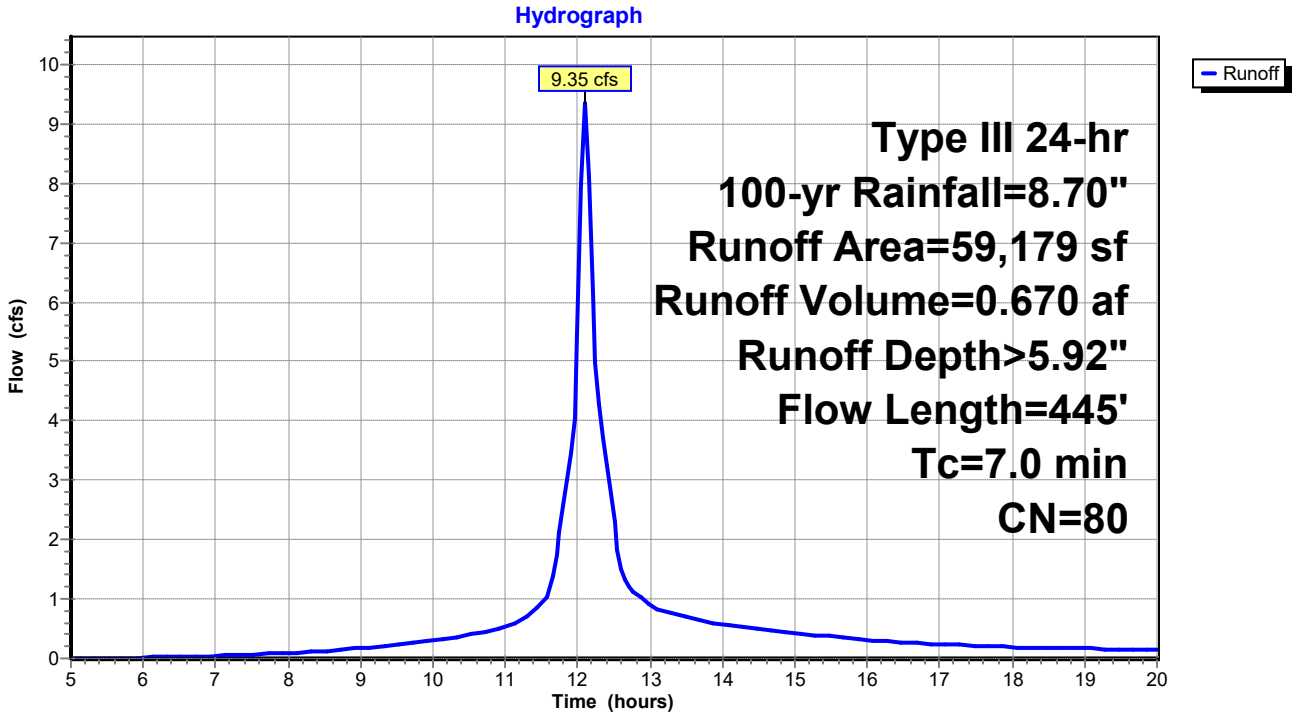

Summary for Reach 1R: Reach 1

Inflow Area = 0.226 ac, 50.01% Impervious, Inflow Depth > 6.68" for 100-yr event
Inflow = 1.97 cfs @ 12.02 hrs, Volume= 0.126 af
Outflow = 1.97 cfs @ 12.02 hrs, Volume= 0.126 af, Atten= 0%, Lag= 0.0 min
Routed to Link DP1 : DP1

Routing by Stor-Ind method, Time Span= 5.00-20.00 hrs, dt= 0.05 hrs

Reach 1R: Reach 1

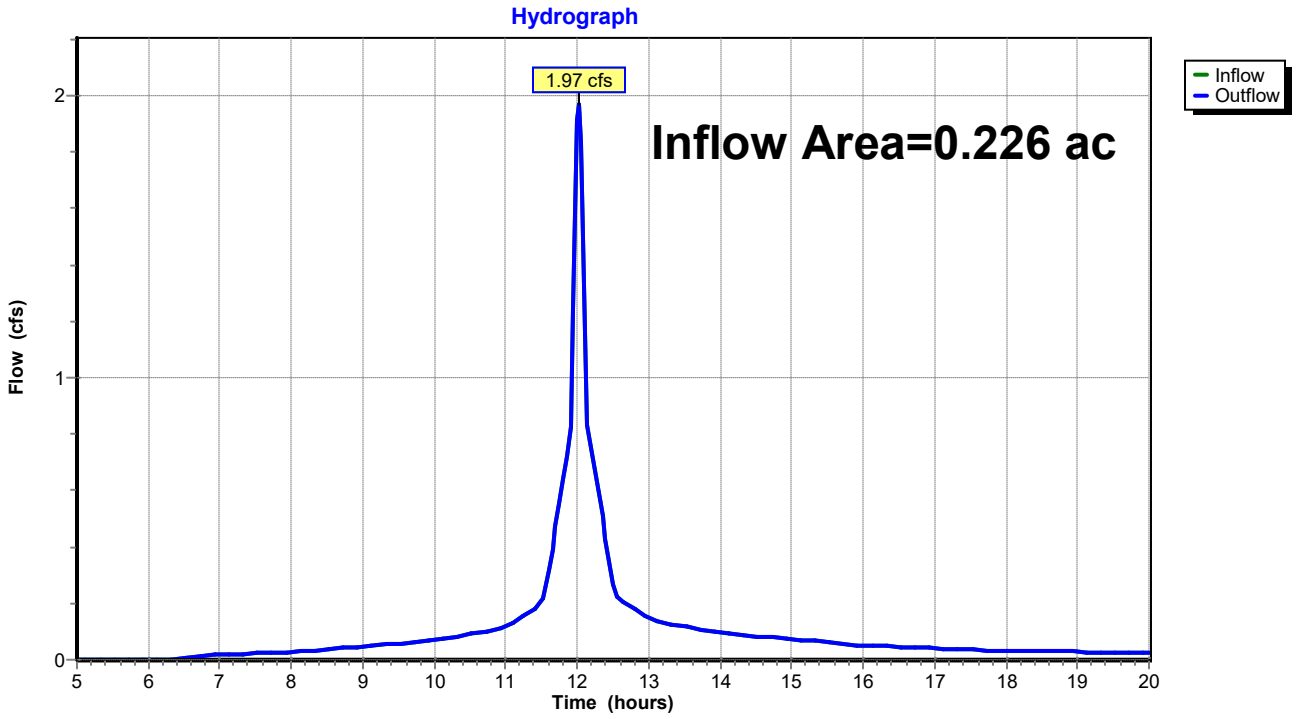

Summary for Reach 2R: Reach 2

Inflow Area = 0.307 ac, 33.49% Impervious, Inflow Depth > 6.25" for 100-yr event
Inflow = 2.27 cfs @ 12.10 hrs, Volume= 0.160 af
Outflow = 2.27 cfs @ 12.10 hrs, Volume= 0.160 af, Atten= 0%, Lag= 0.0 min
Routed to Link DP2 : DP2

Routing by Stor-Ind method, Time Span= 5.00-20.00 hrs, dt= 0.05 hrs

Reach 2R: Reach 2

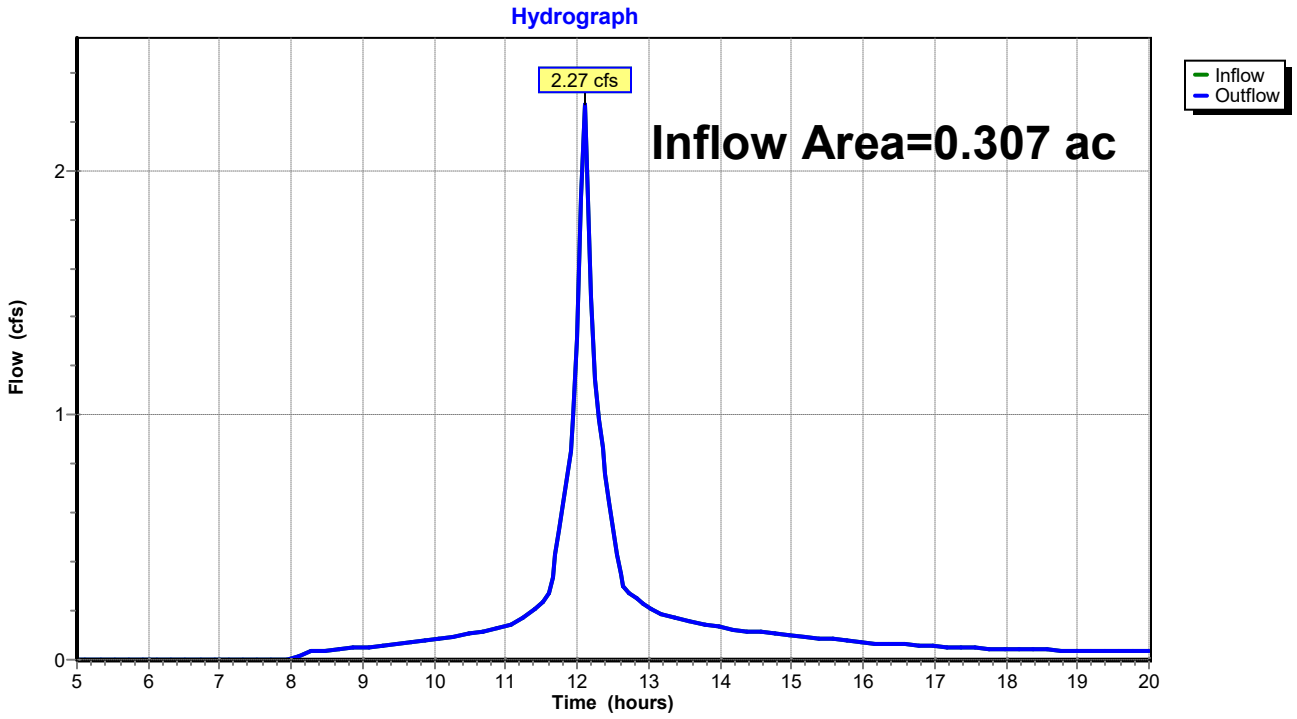

Summary for Reach DP3: Shoreline 3

Inflow Area = 1.359 ac, 4.06% Impervious, Inflow Depth > 5.92" for 100-yr event
Inflow = 9.35 cfs @ 12.10 hrs, Volume= 0.670 af
Outflow = 9.35 cfs @ 12.10 hrs, Volume= 0.670 af, Atten= 0%, Lag= 0.0 min
Routed to Reach SP1 : SACO RIVER / OCEAN

Routing by Stor-Ind method, Time Span= 5.00-20.00 hrs, dt= 0.05 hrs

Reach DP3: Shoreline 3

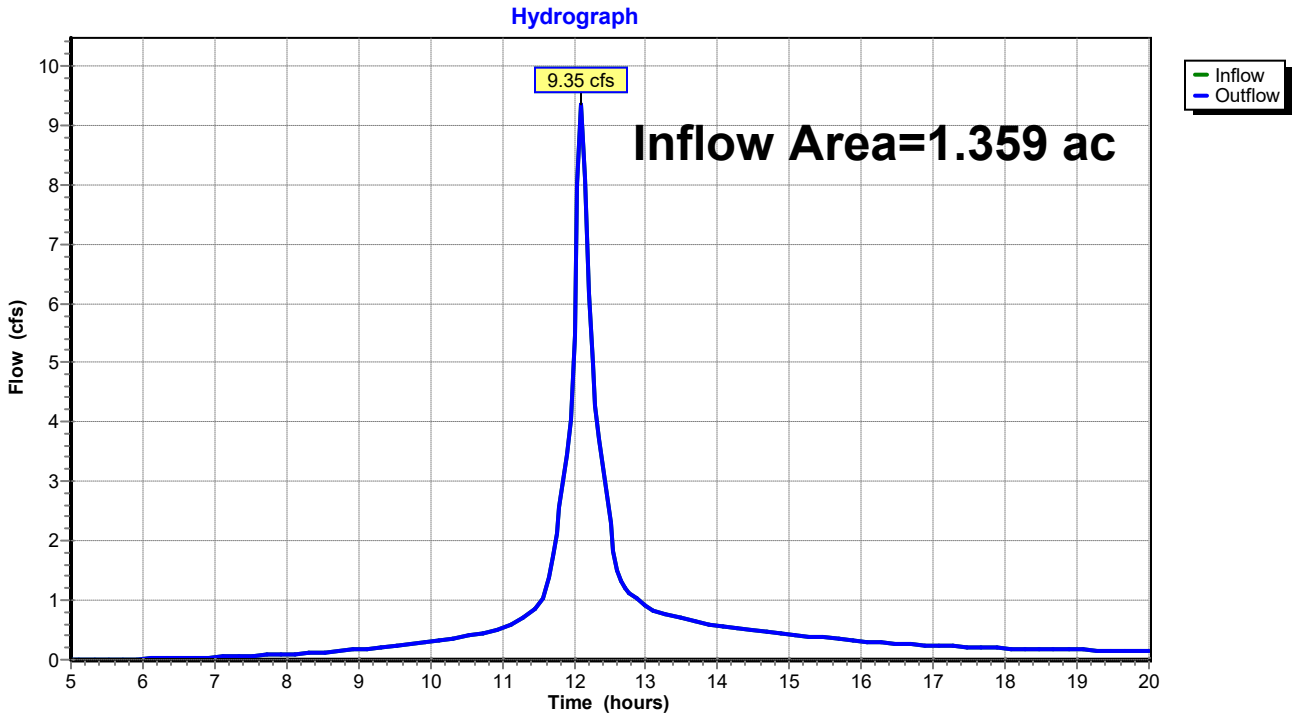

Summary for Reach SP1: SACO RIVER / OCEAN

Inflow Area = 2.557 ac, 11.96% Impervious, Inflow Depth > 6.00" for 100-yr event
Inflow = 17.21 cfs @ 12.09 hrs, Volume= 1.278 af
Outflow = 17.21 cfs @ 12.09 hrs, Volume= 1.278 af, Atten= 0%, Lag= 0.0 min

Routing by Stor-Ind method, Time Span= 5.00-20.00 hrs, dt= 0.05 hrs

Reach SP1: SACO RIVER / OCEAN

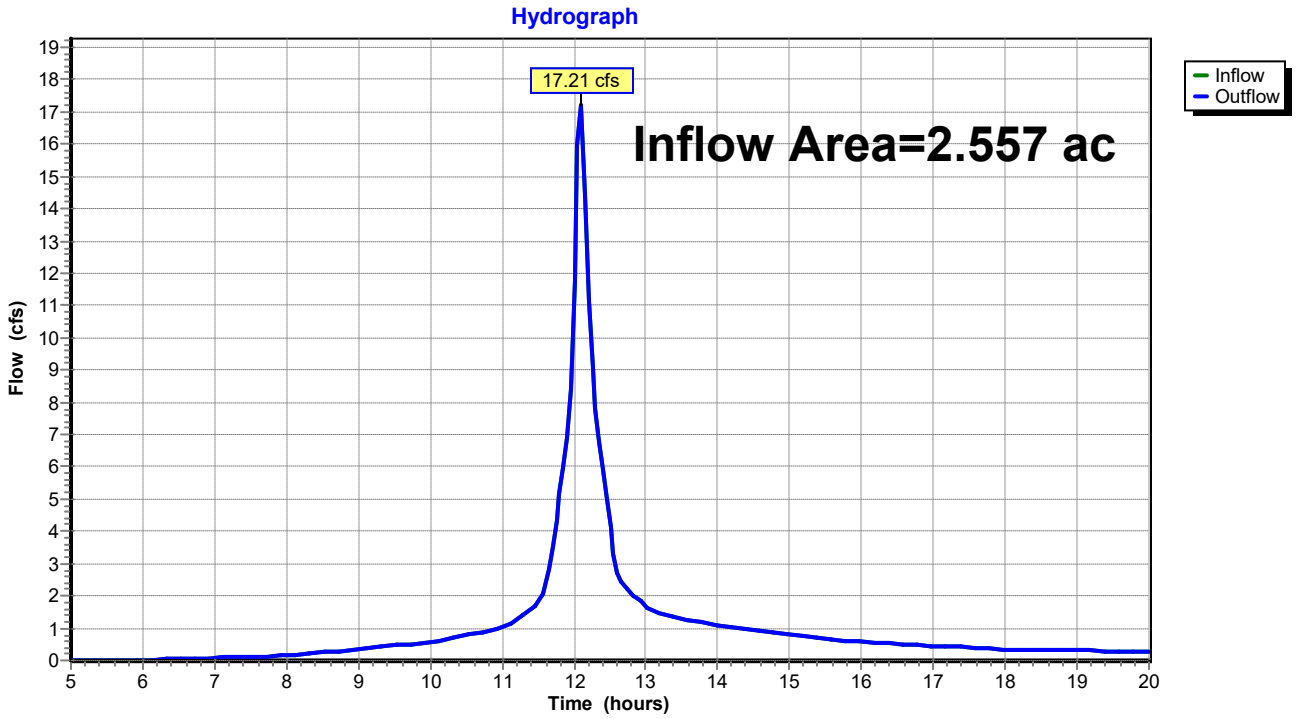

Summary for Pond 1P: Bioretention Filter Cell 1

Inflow Area = 0.226 ac, 50.01% Impervious, Inflow Depth > 6.75" for 100-yr event
Inflow = 2.01 cfs @ 12.01 hrs, Volume= 0.127 af
Outflow = 1.97 cfs @ 12.02 hrs, Volume= 0.126 af, Atten= 2%, Lag= 0.6 min
Primary = 1.97 cfs @ 12.02 hrs, Volume= 0.126 af
Routed to Pond 2P : CB-1

Routing by Stor-Ind method, Time Span= 5.00-20.00 hrs, dt= 0.05 hrs
Peak Elev= 18.25' @ 12.02 hrs Surf.Area= 294 sf Storage= 118 cf

Plug-Flow detention time= 9.1 min calculated for 0.125 af (99% of inflow)
Center-of-Mass det. time= 4.7 min (754.9 - 750.3)

Volume	Invert	Avail.Storage	Storage Description
#1	17.50'	200 cf	**Custom Stage Data (Prismatic)** Listed below (Recalc)

Elevation (feet)	Surf.Area (sq-ft)	Inc.Store (cubic-feet)	Cum.Store (cubic-feet)
17.50	0	0	0
18.00	213	53	53
18.50	372	146	200

Device	Routing	Invert	Outlet Devices
#1	Primary	18.00'	**18.0" Horiz. Orifice/Grate** C= 0.600 in 24.0" Grate (56% open area) Limited to weir flow at low heads

Primary OutFlow Max=1.88 cfs @ 12.02 hrs HW=18.25' (Free Discharge)
↑—**1=Orifice/Grate** (Weir Controls 1.88 cfs @ 1.62 fps)

Pond 1P: Bioretention Filter Cell 1

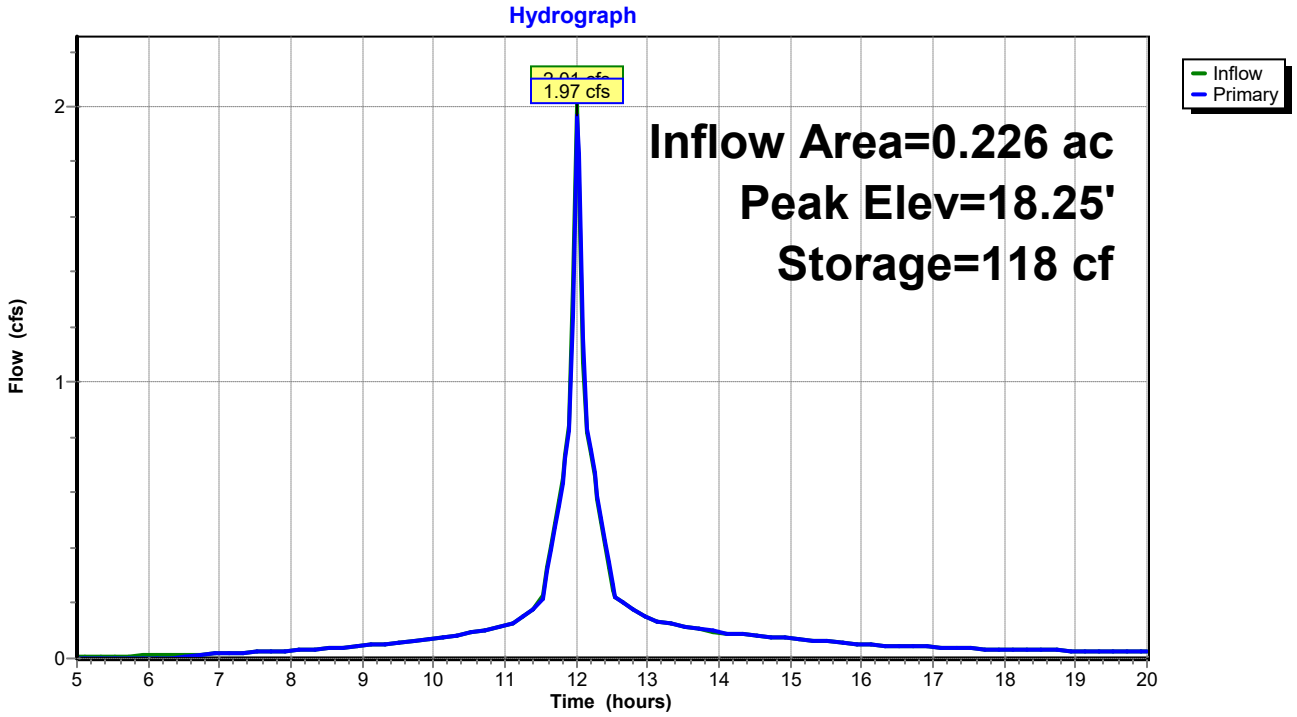

Summary for Pond 2P: CB-1

Inflow Area = 0.226 ac, 50.01% Impervious, Inflow Depth > 6.68" for 100-yr event
Inflow = 1.97 cfs @ 12.02 hrs, Volume= 0.126 af
Outflow = 1.97 cfs @ 12.02 hrs, Volume= 0.126 af, Atten= 0%, Lag= 0.0 min
Primary = 1.97 cfs @ 12.02 hrs, Volume= 0.126 af
Routed to Reach 1R : Reach 1

Routing by Stor-Ind method, Time Span= 5.00-20.00 hrs, dt= 0.05 hrs
Peak Elev= 14.54' @ 12.02 hrs

Device	Routing	Invert	Outlet Devices
#1	Primary	13.75'	**15.0" Round Culvert** L= 48.0' CPP, projecting, no headwall, Ke= 0.900 Inlet / Outlet Invert= 13.75' / 12.00' S= 0.0365 '/' Cc= 0.900 n= 0.013 Corrugated PE, smooth interior, Flow Area= 1.23 sf

Primary OutFlow Max=1.88 cfs @ 12.02 hrs HW=14.52' (Free Discharge)
1=Culvert (Inlet Controls 1.88 cfs @ 2.36 fps)

Pond 2P: CB-1

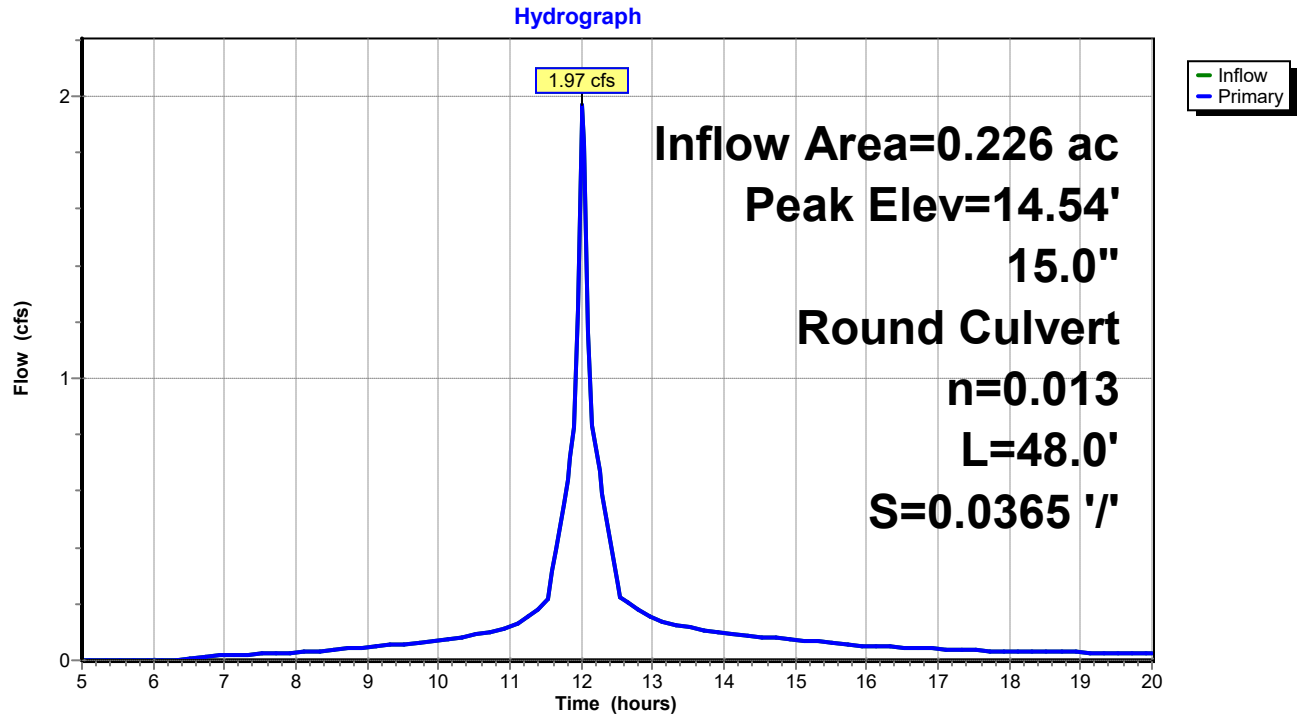

Summary for Pond 3P: Bioretention Filter Cell 2

Inflow Area = 0.307 ac, 33.49% Impervious, Inflow Depth > 6.40" for 100-yr event
Inflow = 2.37 cfs @ 12.07 hrs, Volume= 0.164 af
Outflow = 2.35 cfs @ 12.08 hrs, Volume= 0.163 af, Atten= 1%, Lag= 0.6 min
Primary = 2.35 cfs @ 12.08 hrs, Volume= 0.163 af
Routed to Pond 4P : CB-2

Routing by Stor-Ind method, Time Span= 5.00-20.00 hrs, dt= 0.05 hrs
Peak Elev= 23.79' @ 12.08 hrs Surf.Area= 263 sf Storage= 103 cf

Plug-Flow detention time= 5.8 min calculated for 0.163 af (99% of inflow)
Center-of-Mass det. time= 3.0 min (762.5 - 759.5)

Volume	Invert	Avail.Storage	Storage Description
#1	23.00'	380 cf	**Custom Stage Data (Prismatic)** Listed below (Recalc)

Elevation (feet)	Surf.Area (sq-ft)	Inc.Store (cubic-feet)	Cum.Store (cubic-feet)
23.00	0	0	0
24.00	335	168	168
24.50	515	213	380

Device	Routing	Invert	Outlet Devices
#1	Primary	23.50'	**18.0" Horiz. Orifice/Grate** C= 0.600 in 24.0" Grate (56% open area) Limited to weir flow at low heads

Primary OutFlow Max=2.28 cfs @ 12.08 hrs HW=23.78' (Free Discharge)
↑**1=Orifice/Grate** (Weir Controls 2.28 cfs @ 1.73 fps)

Pond 3P: Bioretention Filter Cell 2

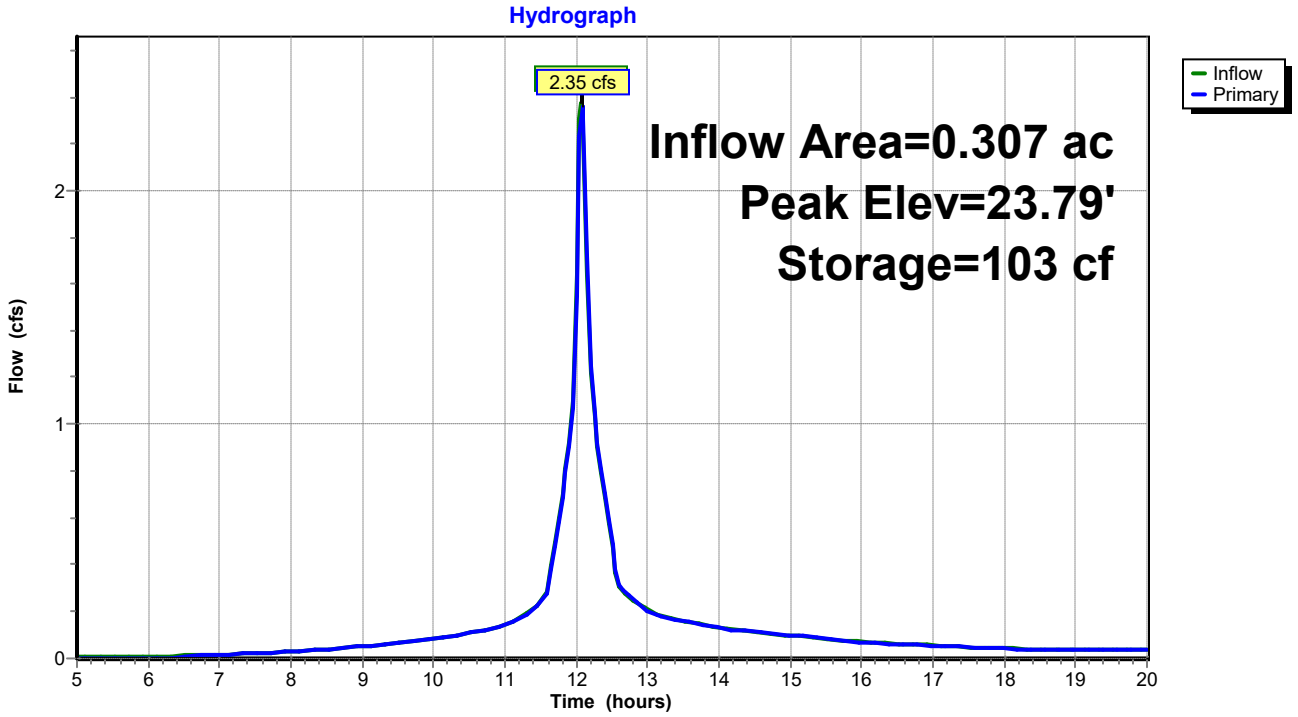

Summary for Pond 4P: CB-2

Inflow Area = 0.307 ac, 33.49% Impervious, Inflow Depth > 6.36" for 100-yr event
Inflow = 2.35 cfs @ 12.08 hrs, Volume= 0.163 af
Outflow = 2.35 cfs @ 12.08 hrs, Volume= 0.163 af, Atten= 0%, Lag= 0.0 min
Primary = 2.35 cfs @ 12.08 hrs, Volume= 0.163 af
Routed to Pond 5P : Level Lip Speader

Routing by Stor-Ind method, Time Span= 5.00-20.00 hrs, dt= 0.05 hrs
Peak Elev= 19.56' @ 12.08 hrs

Device	Routing	Invert	Outlet Devices
#1	Primary	18.75'	**18.0" Round Culvert** L= 40.0' CPP, projecting, no headwall, Ke= 0.900 Inlet / Outlet Invert= 18.75' / 18.00' S= 0.0187 '/' Cc= 0.900 n= 0.013 Corrugated PE, smooth interior, Flow Area= 1.77 sf

Primary OutFlow Max=2.28 cfs @ 12.08 hrs HW=19.54' (Free Discharge)
1=Culvert (Inlet Controls 2.28 cfs @ 2.40 fps)

Pond 4P: CB-2

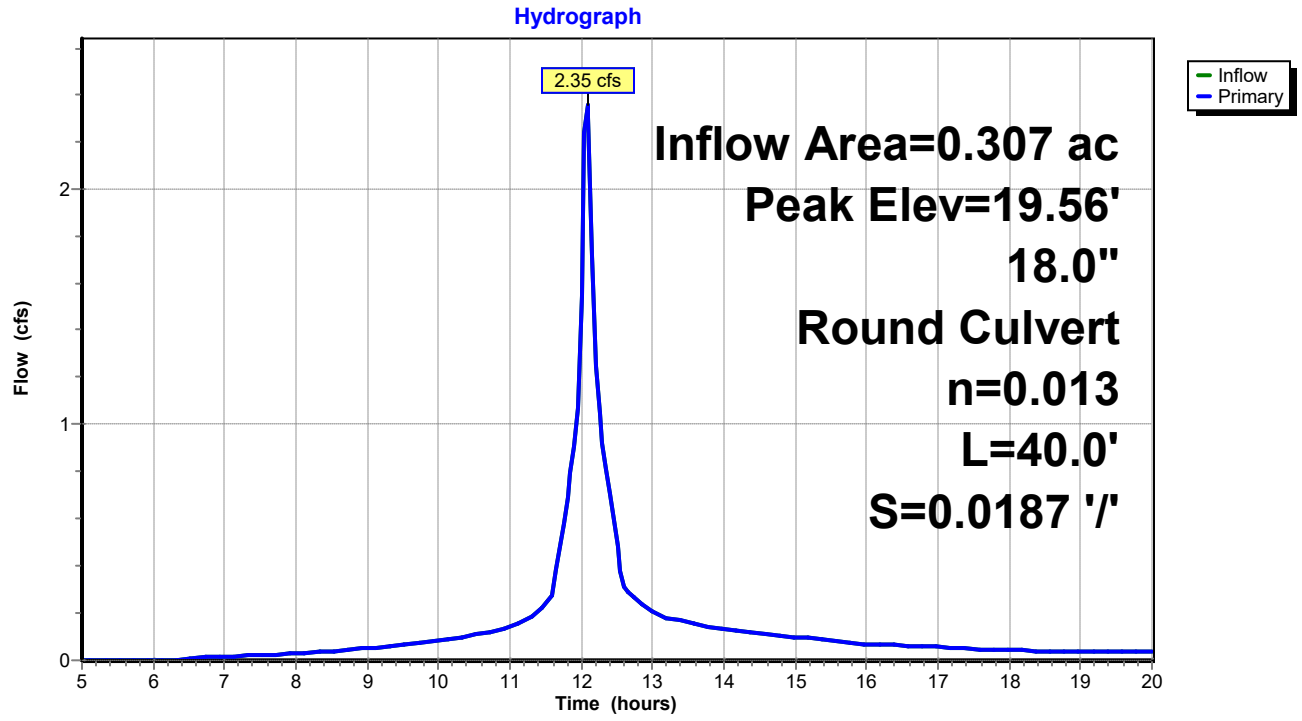

Summary for Pond 5P: Level Lip Speader

Inflow Area = 0.307 ac, 33.49% Impervious, Inflow Depth > 6.36" for 100-yr event
Inflow = 2.35 cfs @ 12.08 hrs, Volume= 0.163 af
Outflow = 2.27 cfs @ 12.10 hrs, Volume= 0.160 af, Atten= 4%, Lag= 1.5 min
Primary = 2.27 cfs @ 12.10 hrs, Volume= 0.160 af
Routed to Reach 2R : Reach 2

Routing by Stor-Ind method, Time Span= 5.00-20.00 hrs, dt= 0.05 hrs
Peak Elev= 18.00' @ 8.10 hrs Surf.Area= 168 sf Storage= 115 cf
Flood Elev= 20.00' Surf.Area= 168 sf Storage= 115 cf

Plug-Flow detention time= 13.3 min calculated for 0.160 af (98% of inflow)
Center-of-Mass det. time= 6.5 min (769.1 - 762.5)

Volume	Invert	Avail.Storage	Storage Description
#1	17.00'	115 cf	**Custom Stage Data (Prismatic)** Listed below (Recalc)

Elevation (feet)	Surf.Area (sq-ft)	Voids (%)	Inc.Store (cubic-feet)	Cum.Store (cubic-feet)
17.00	61	0.0	0	0
18.00	168	100.0	115	115

Device	Routing	Invert	Outlet Devices
#0	Primary	18.00'	**Automatic Storage Overflow** (Discharged without head)

Primary OutFlow Max=0.00 cfs @ 12.10 hrs HW=18.00' (Free Discharge)

Pond 5P: Level Lip Speader

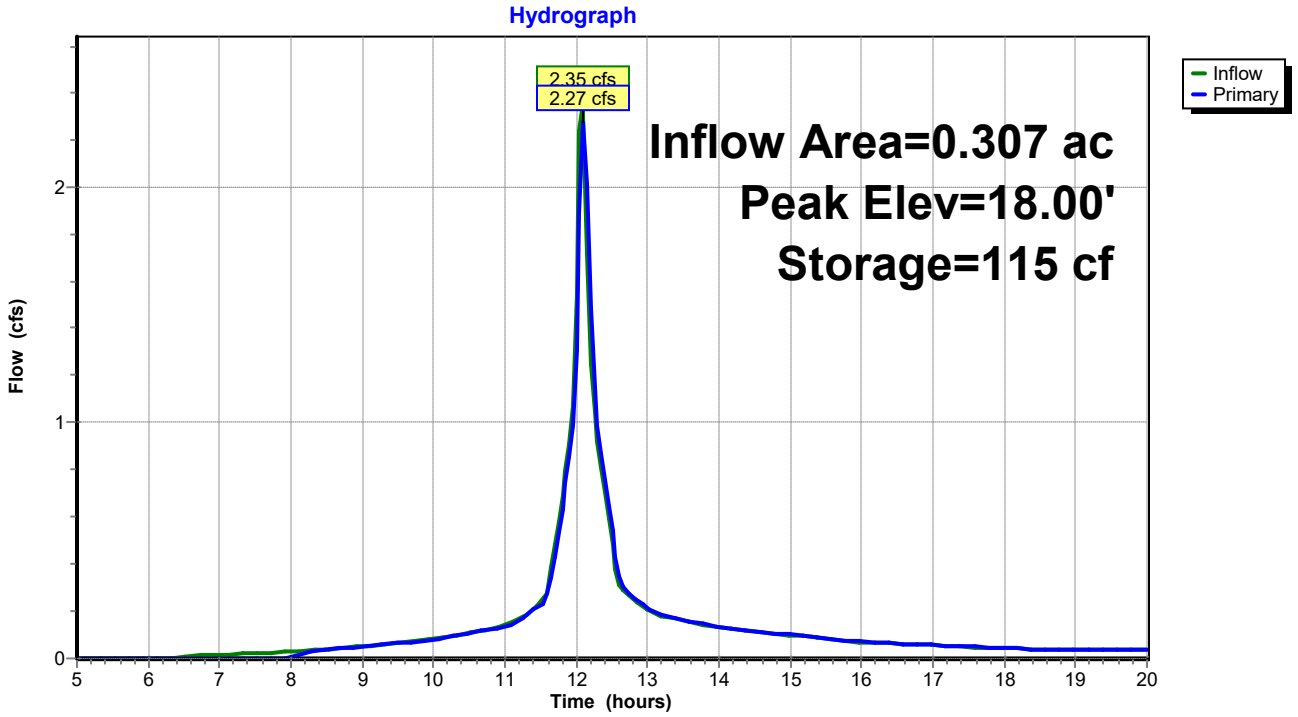

Summary for Link DP1: DP1

Inflow Area = 0.489 ac, 28.87% Impervious, Inflow Depth > 6.21" for 100-yr event
Inflow = 3.88 cfs @ 12.04 hrs, Volume= 0.253 af
Primary = 3.88 cfs @ 12.04 hrs, Volume= 0.253 af, Atten= 0%, Lag= 0.0 min
Routed to Reach SP1 : SACO RIVER / OCEAN

Primary outflow = Inflow, Time Span= 5.00-20.00 hrs, dt= 0.05 hrs

Link DP1: DP1

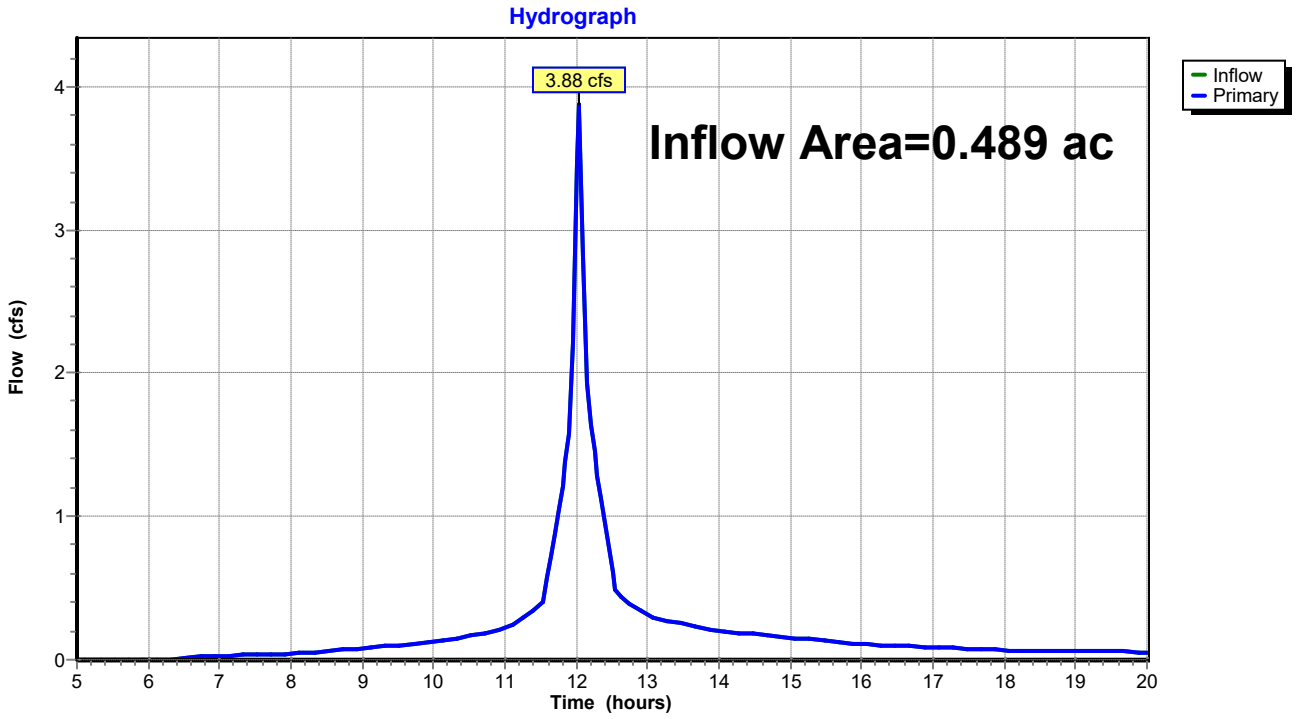

Summary for Link DP2: DP2

Inflow Area = 0.709 ac, 15.44% Impervious, Inflow Depth > 6.00" for 100-yr event
Inflow = 4.98 cfs @ 12.10 hrs, Volume= 0.354 af
Primary = 4.98 cfs @ 12.10 hrs, Volume= 0.354 af, Atten= 0%, Lag= 0.0 min
Routed to Reach SP1 : SACO RIVER / OCEAN

Primary outflow = Inflow, Time Span= 5.00-20.00 hrs, dt= 0.05 hrs

Link DP2: DP2

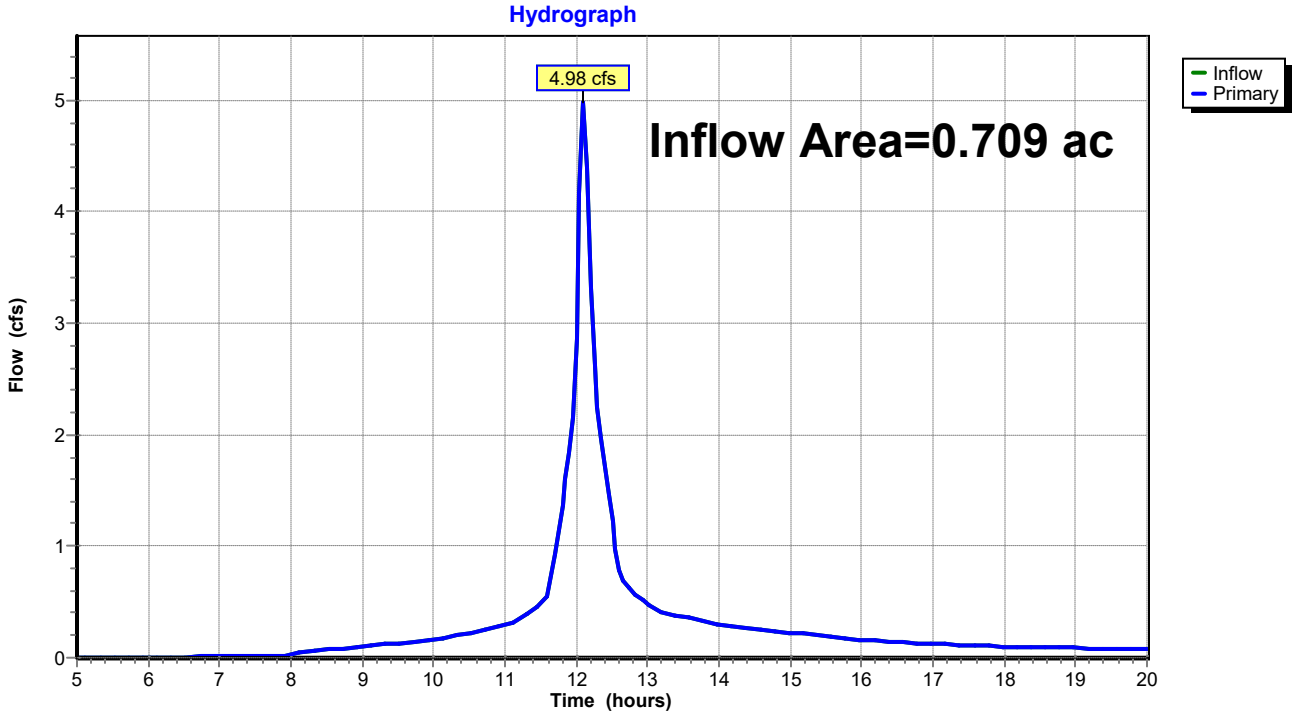

Time span=5.00-20.00 hrs, dt=0.05 hrs, 301 points
Runoff by SCS TR-20 method, UH=SCS, Weighted-CN
Reach routing by Stor-Ind method - Pond routing by Stor-Ind method

Subcatchment 1S: Post Subcatchment 1 Runoff Area=9,832 sf 50.01% Impervious Runoff Depth>0.20"
Flow Length=172' Tc=0.8 min CN=87 Runoff=0.06 cfs 0.004 af

Subcatchment 2S: Post Subcatchment 2 Runoff Area=11,488 sf 10.78% Impervious Runoff Depth>0.06"
Flow Length=133' Tc=3.4 min CN=79 Runoff=0.01 cfs 0.001 af

Subcatchment 3S: Post Subcatchment 3 Runoff Area=13,365 sf 33.49% Impervious Runoff Depth>0.13"
Flow Length=262' Tc=4.9 min CN=84 Runoff=0.04 cfs 0.003 af

Subcatchment 4S: Post Subcatchment 4 Runoff Area=17,529 sf 1.68% Impervious Runoff Depth>0.06"
Flow Length=126' Tc=7.2 min CN=79 Runoff=0.01 cfs 0.002 af

Subcatchment 5S: Post Subcatchment 5 Runoff Area=59,179 sf 4.06% Impervious Runoff Depth>0.07"
Flow Length=445' Tc=7.0 min CN=80 Runoff=0.05 cfs 0.008 af

Reach 1R: Reach 1 Inflow=0.02 cfs 0.003 af
Outflow=0.02 cfs 0.003 af

Reach 2R: Reach 2 Inflow=0.00 cfs 0.000 af
Outflow=0.00 cfs 0.000 af

Reach DP3: Shoreline 3 Inflow=0.05 cfs 0.008 af
Outflow=0.05 cfs 0.008 af

Reach SP1: SACO RIVER / OCEAN Inflow=0.09 cfs 0.014 af
Outflow=0.09 cfs 0.014 af

Pond 1P: Bioretention Filter Cell 1 Peak Elev=18.01' Storage=56 cf Inflow=0.06 cfs 0.004 af
Outflow=0.02 cfs 0.003 af

Pond 2P: CB-1 Peak Elev=13.83' Inflow=0.02 cfs 0.003 af
15.0" Round Culvert n=0.013 L=48.0' S=0.0365 '/' Outflow=0.02 cfs 0.003 af

Pond 3P: Bioretention Filter Cell 2 Peak Elev=23.51' Storage=44 cf Inflow=0.04 cfs 0.003 af
Outflow=0.02 cfs 0.002 af

Pond 4P: CB-2 Peak Elev=18.81' Inflow=0.02 cfs 0.002 af
18.0" Round Culvert n=0.013 L=40.0' S=0.0187 '/' Outflow=0.02 cfs 0.002 af

Pond 5P: Level Lip Speader Peak Elev=17.95' Storage=106 cf Inflow=0.02 cfs 0.002 af
Outflow=0.00 cfs 0.000 af

Link DP1: DP1 Inflow=0.03 cfs 0.004 af
Primary=0.03 cfs 0.004 af

Link DP2: DP2 Inflow=0.01 cfs 0.002 af
Primary=0.01 cfs 0.002 af

Total Runoff Area = 2.557 ac Runoff Volume = 0.018 af Average Runoff Depth = 0.09"
88.04% Pervious = 2.251 ac 11.96% Impervious = 0.306 ac

Summary for Subcatchment 1S: Post Subcatchment 1

Runoff = 0.06 cfs @ 12.03 hrs, Volume= 0.004 af, Depth> 0.20"
Routed to Pond 1P : Bioretention Filter Cell 1

Runoff by SCS TR-20 method, UH=SCS, Weighted-CN, Time Span= 5.00-20.00 hrs, dt= 0.05 hrs
Type III 24-hr WQ Rainfall=1.00"

	Area (sf)	CN	Description
	3,430	77	Woods, Good, HSG D
*	982	98	Ledge, HSG D
	595	80	>75% Grass cover, Good, HSG D
*	3,935	98	Paved Access Drive, HSG D
*	890	73	Bioretention Filter Cell, Good, HSG D
	9,832	87	Weighted Average
	4,915		49.99% Pervious Area
	4,917		50.01% Impervious Area

Tc (min)	Length (feet)	Slope (ft/ft)	Velocity (ft/sec)	Capacity (cfs)	Description
0.4	46	0.0500	1.73		**Sheet Flow, Tc-1** Smooth surfaces n= 0.011 P2= 3.30"
0.3	102	0.0500	5.25	15.74	**Channel Flow, Tc-2** Area= 3.0 sf Perim= 9.2' r= 0.33' n= 0.030 Earth, grassed & winding
0.1	24	0.0625	3.75		**Shallow Concentrated Flow, Tc-3** Grassed Waterway Kv= 15.0 fps
0.8	172	Total			

Subcatchment 1S: Post Subcatchment 1

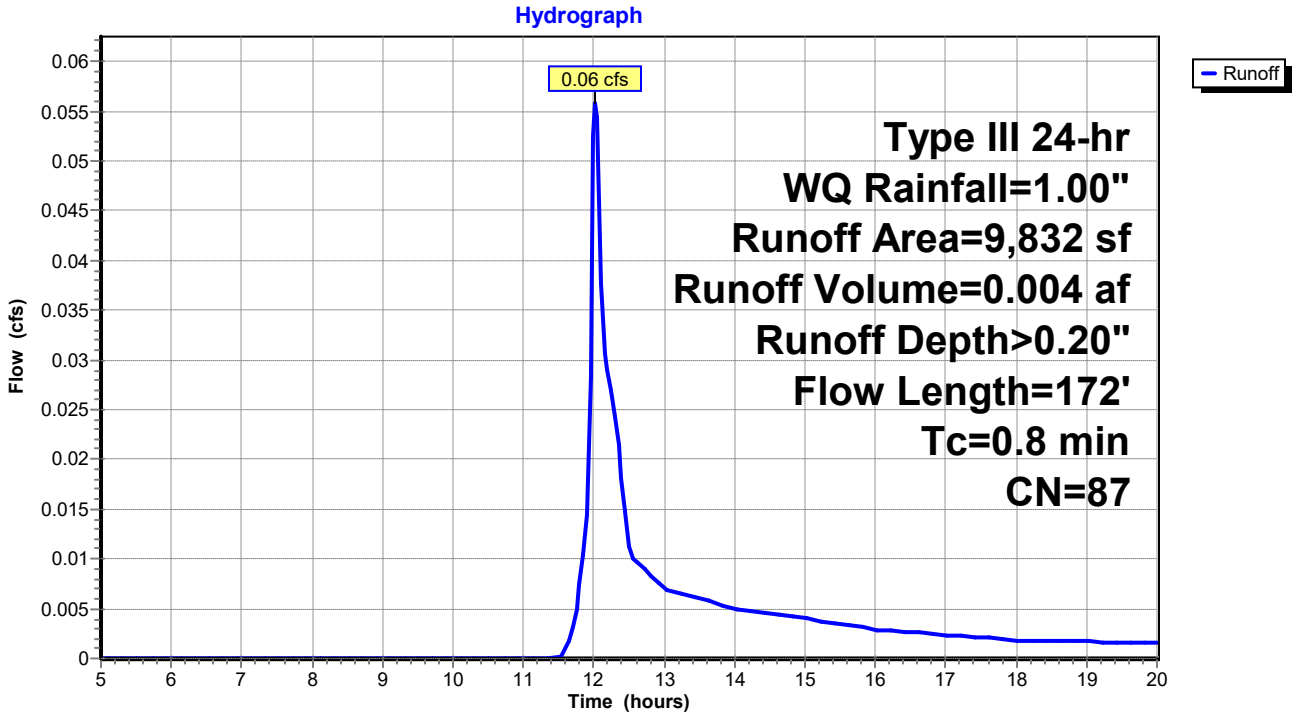

Summary for Subcatchment 2S: Post Subcatchment 2

Runoff = 0.01 cfs @ 12.31 hrs, Volume= 0.001 af, Depth> 0.06"
Routed to Link DP1 : DP1

Runoff by SCS TR-20 method, UH=SCS, Weighted-CN, Time Span= 5.00-20.00 hrs, dt= 0.05 hrs
Type III 24-hr WQ Rainfall=1.00"

Area (sf)	CN	Description
10,250	77	Woods, Good, HSG D
1,238	98	Paved parking, HSG D
11,488	79	Weighted Average
10,250		89.22% Pervious Area
1,238		10.78% Impervious Area

Tc (min)	Length (feet)	Slope (ft/ft)	Velocity (ft/sec)	Capacity (cfs)	Description
2.5	21	0.1905	0.14		**Sheet Flow, Tc-1** Woods: Light underbrush n= 0.400 P2= 3.30"
0.9	112	0.1696	2.06		**Shallow Concentrated Flow, Tc-2** Woodland Kv= 5.0 fps
3.4	133	Total			

Subcatchment 2S: Post Subcatchment 2

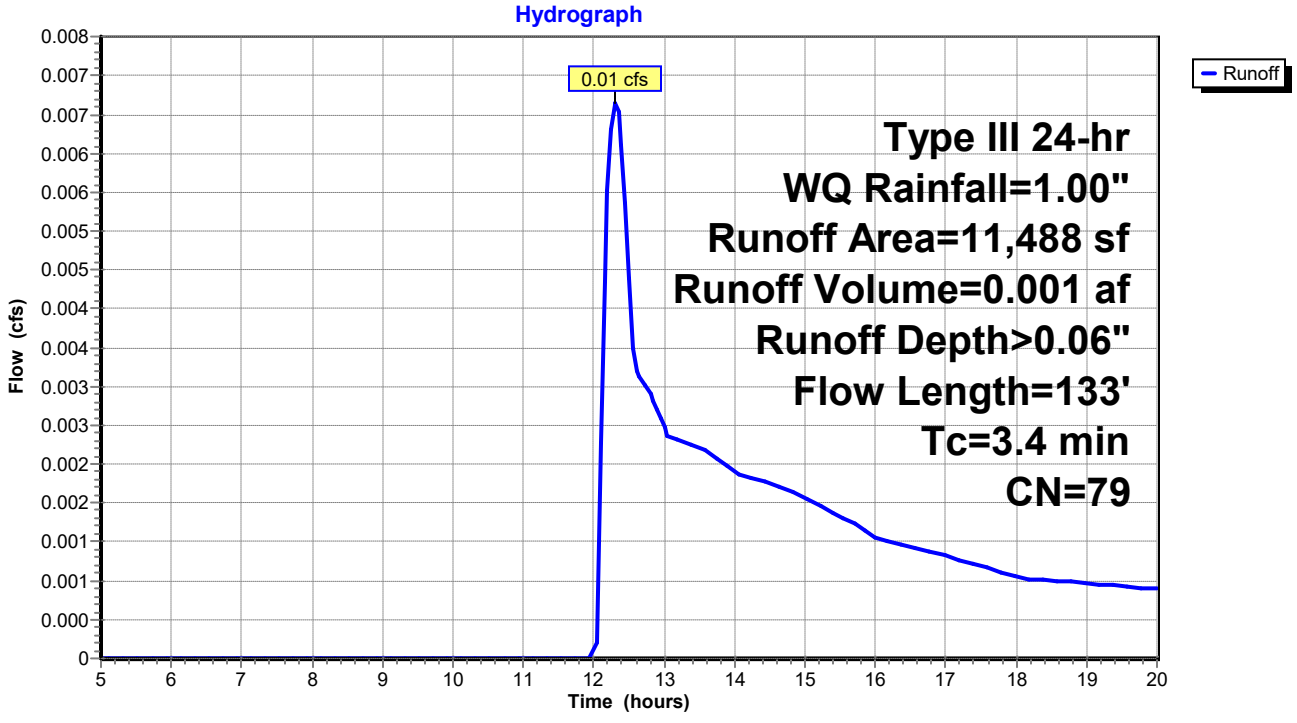

Summary for Subcatchment 3S: Post Subcatchment 3

Runoff = 0.04 cfs @ 12.11 hrs, Volume= 0.003 af, Depth> 0.13"
Routed to Pond 3P : Bioretention Filter Cell 2

Runoff by SCS TR-20 method, UH=SCS, Weighted-CN, Time Span= 5.00-20.00 hrs, dt= 0.05 hrs
Type III 24-hr WQ Rainfall=1.00"

	Area (sf)	CN	Description
	6,822	77	Woods, Good, HSG D
*	580	73	Biofiltration cell, Good, HSG D
*	3,768	98	Paved access drive, HSG D
	1,487	80	>75% Grass cover, Good, HSG D
*	708	98	Ledge, HSG D
	13,365	84	Weighted Average
	8,889		66.51% Pervious Area
	4,476		33.49% Impervious Area

Tc (min)	Length (feet)	Slope (ft/ft)	Velocity (ft/sec)	Capacity (cfs)	Description
4.2	43	0.2093	0.17		**Sheet Flow, Tc-1** Woods: Light underbrush n= 0.400 P2= 3.30"
0.7	214	0.0500	5.25	15.74	**Channel Flow, Tc-2** Area= 3.0 sf Perim= 9.2' r= 0.33' n= 0.030 Earth, grassed & winding
0.0	5	0.0500	3.35		**Shallow Concentrated Flow, Tc-3** Grassed Waterway Kv= 15.0 fps
4.9	262	Total			

Subcatchment 3S: Post Subcatchment 3

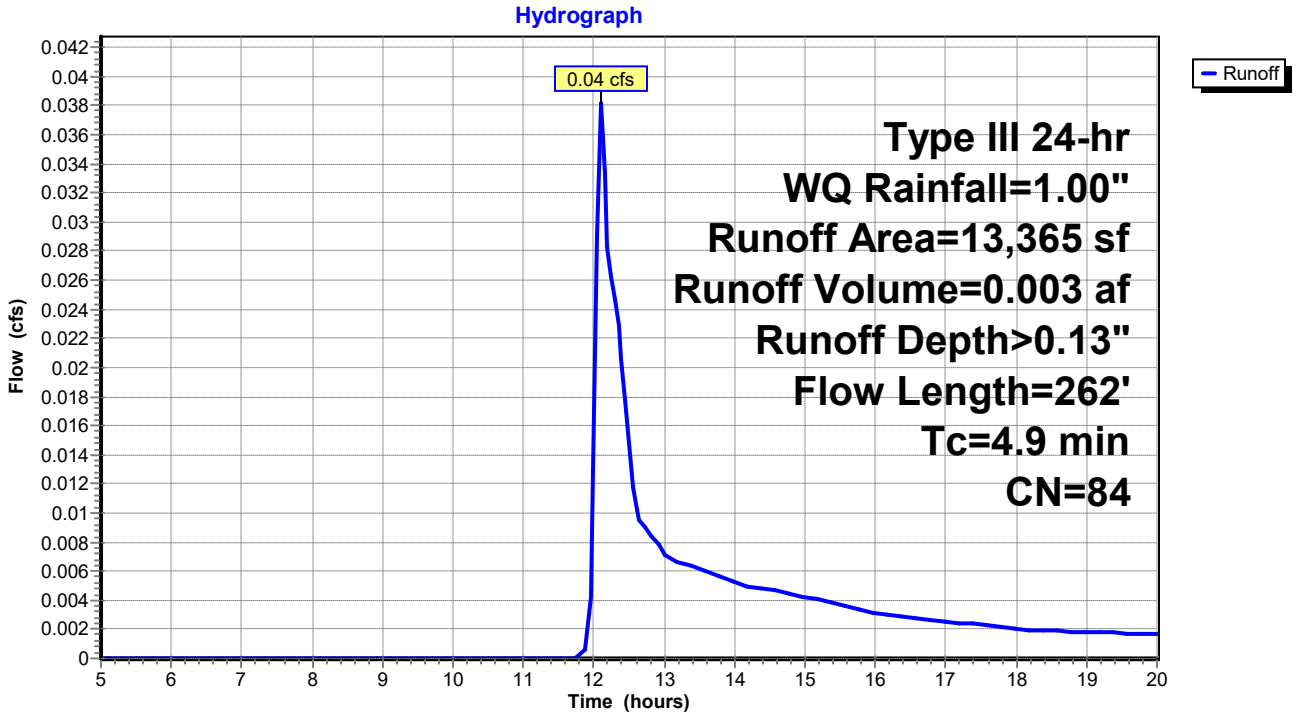

Summary for Subcatchment 4S: Post Subcatchment 4

Runoff = 0.01 cfs @ 12.38 hrs, Volume= 0.002 af, Depth> 0.06"
Routed to Link DP2 : DP2

Runoff by SCS TR-20 method, UH=SCS, Weighted-CN, Time Span= 5.00-20.00 hrs, dt= 0.05 hrs
Type III 24-hr WQ Rainfall=1.00"

	Area (sf)	CN	Description
*	295	98	Paved access drive, HSG D
	1,450	80	>75% Grass cover, Good, HSG D
	15,784	79	Woods, Fair, HSG D
	17,529	79	Weighted Average
	17,234		98.32% Pervious Area
	295		1.68% Impervious Area

Tc (min)	Length (feet)	Slope (ft/ft)	Velocity (ft/sec)	Capacity (cfs)	Description
6.8	62	0.1290	0.15		**Sheet Flow, Tc-1** Woods: Light underbrush n= 0.400 P2= 3.30"
0.4	64	0.2343	2.42		**Shallow Concentrated Flow, Tc-2** Woodland Kv= 5.0 fps
7.2	126	Total			

Subcatchment 4S: Post Subcatchment 4

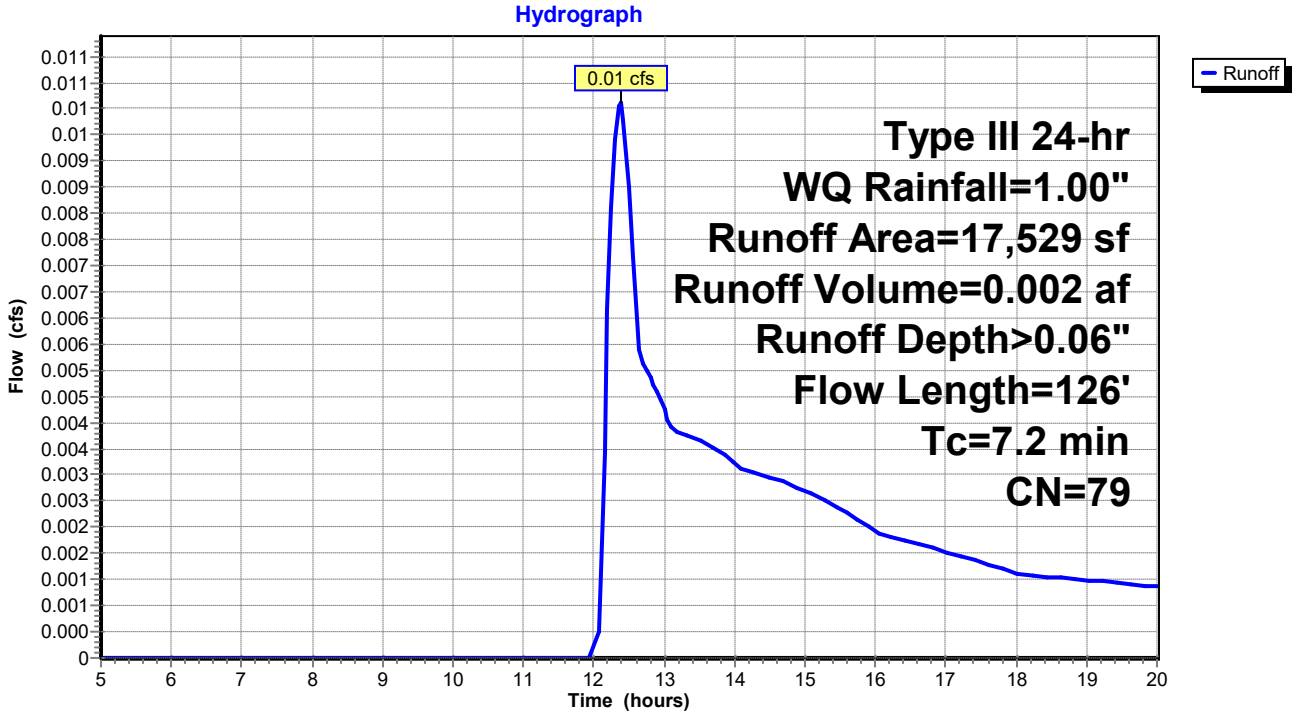

Summary for Subcatchment 5S: Post Subcatchment 5

Runoff = 0.05 cfs @ 12.34 hrs, Volume= 0.008 af, Depth> 0.07"
Routed to Reach DP3 : Shoreline 3

Runoff by SCS TR-20 method, UH=SCS, Weighted-CN, Time Span= 5.00-20.00 hrs, dt= 0.05 hrs
Type III 24-hr WQ Rainfall=1.00"

	Area (sf)	CN	Description
*	1,650	98	Paved acccess drive, HSG D
	751	98	Roofs, HSG D
*	6,955	88	Sand beach, HSG D
	3,872	96	Gravel surface, HSG D
	45,951	77	Woods, Good, HSG D
	59,179	80	Weighted Average
	56,778		95.94% Pervious Area
	2,401		4.06% Impervious Area

Tc (min)	Length (feet)	Slope (ft/ft)	Velocity (ft/sec)	Capacity (cfs)	Description
2.7	23	0.1740	0.14		**Sheet Flow, Tc-1** Woods: Light underbrush n= 0.400 P2= 3.30"
1.0	70	0.0574	1.20		**Shallow Concentrated Flow, Tc-2** Woodland Kv= 5.0 fps
0.5	170	0.1059	5.24		**Shallow Concentrated Flow, Tc-3** Unpaved Kv= 16.1 fps
2.5	140	0.0357	0.94		**Shallow Concentrated Flow, Tc-4** Woodland Kv= 5.0 fps
0.3	42	0.0714	2.67		**Shallow Concentrated Flow, Tc-5** Nearly Bare & Untilled Kv= 10.0 fps
7.0	445	Total			

Subcatchment 5S: Post Subcatchment 5

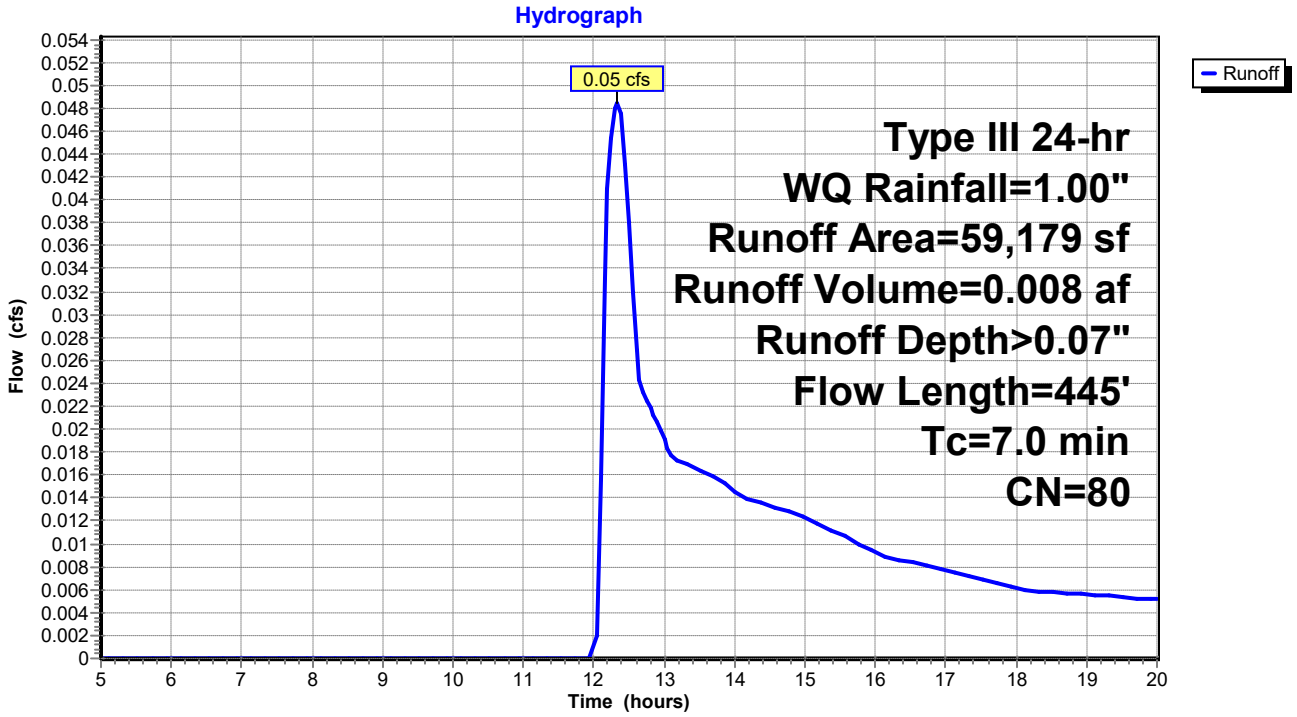

Summary for Reach 1R: Reach 1

Inflow Area = 0.226 ac, 50.01% Impervious, Inflow Depth > 0.14" for WQ event
Inflow = 0.02 cfs @ 12.36 hrs, Volume= 0.003 af
Outflow = 0.02 cfs @ 12.36 hrs, Volume= 0.003 af, Atten= 0%, Lag= 0.0 min
Routed to Link DP1 : DP1

Routing by Stor-Ind method, Time Span= 5.00-20.00 hrs, dt= 0.05 hrs

Reach 1R: Reach 1

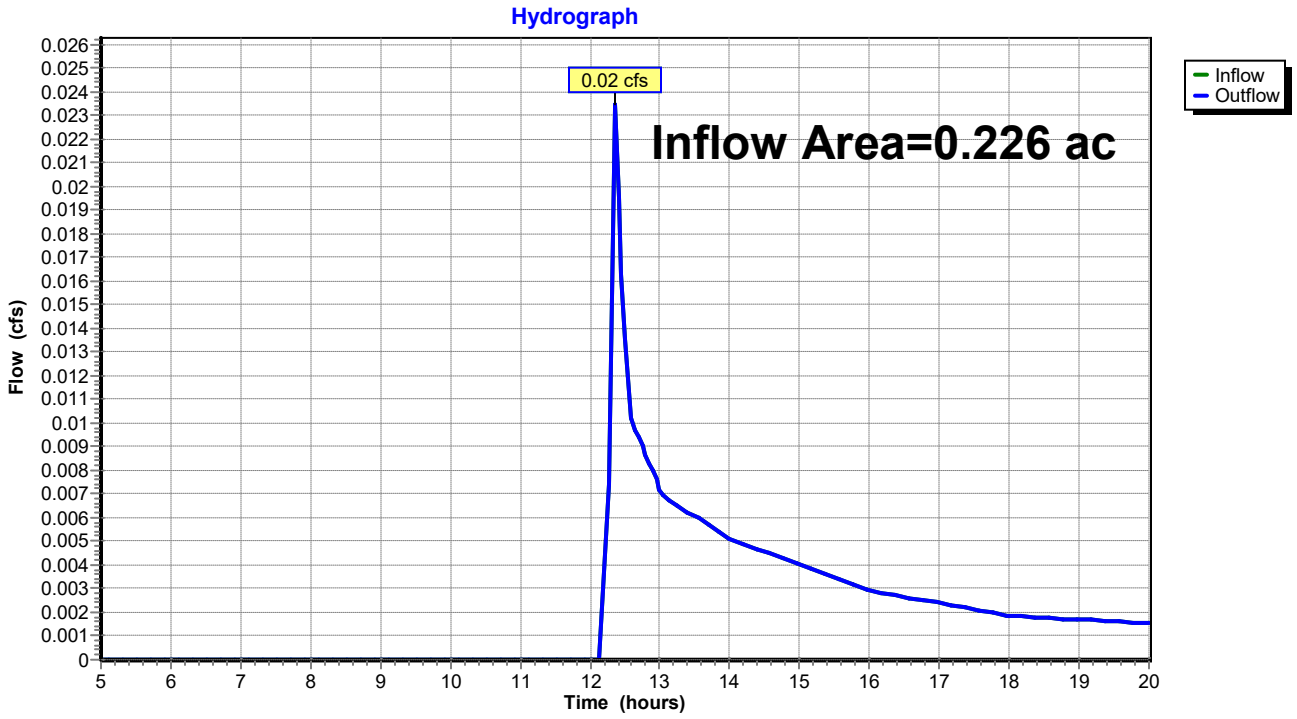

Summary for Reach 2R: Reach 2

Inflow Area = 0.307 ac, 33.49% Impervious, Inflow Depth = 0.00" for WQ event
Inflow = 0.00 cfs @ 5.00 hrs, Volume= 0.000 af
Outflow = 0.00 cfs @ 5.00 hrs, Volume= 0.000 af, Atten= 0%, Lag= 0.0 min
Routed to Link DP2 : DP2

Routing by Stor-Ind method, Time Span= 5.00-20.00 hrs, dt= 0.05 hrs

Reach 2R: Reach 2

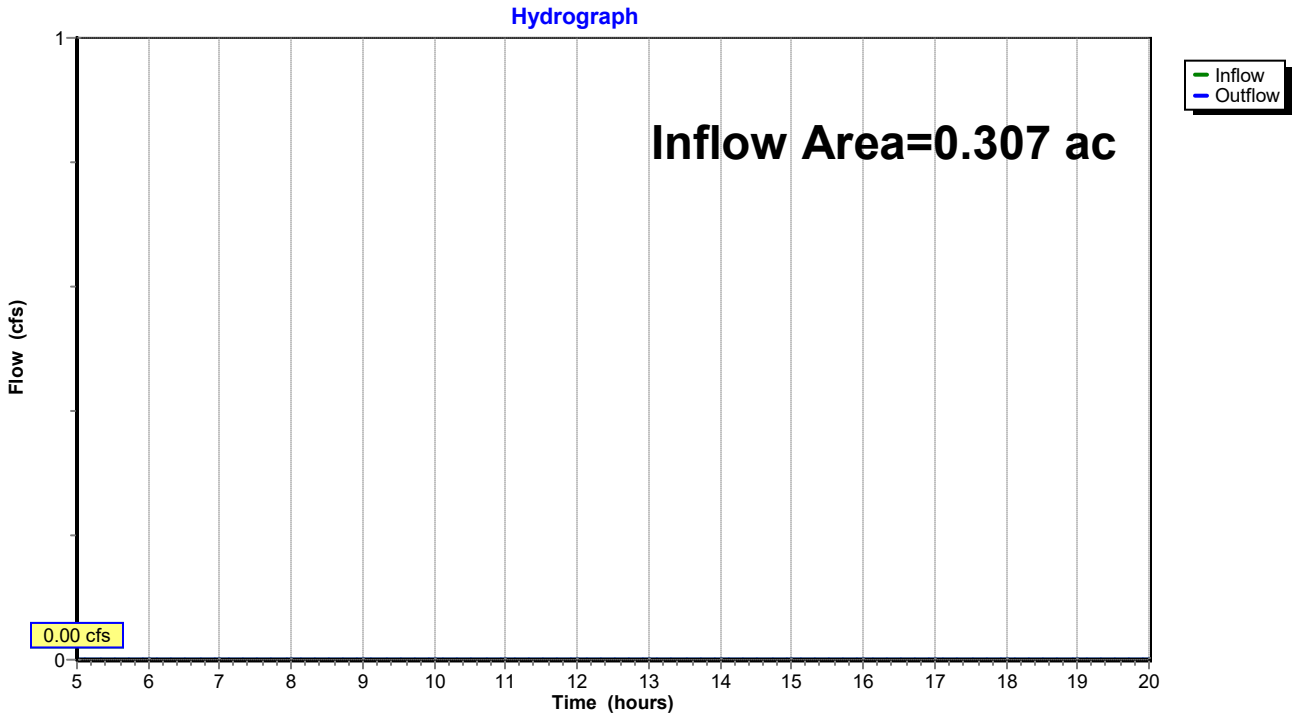

Summary for Reach DP3: Shoreline 3

Inflow Area = 1.359 ac, 4.06% Impervious, Inflow Depth > 0.07" for WQ event
Inflow = 0.05 cfs @ 12.34 hrs, Volume= 0.008 af
Outflow = 0.05 cfs @ 12.34 hrs, Volume= 0.008 af, Atten= 0%, Lag= 0.0 min
Routed to Reach SP1 : SACO RIVER / OCEAN

Routing by Stor-Ind method, Time Span= 5.00-20.00 hrs, dt= 0.05 hrs

Reach DP3: Shoreline 3

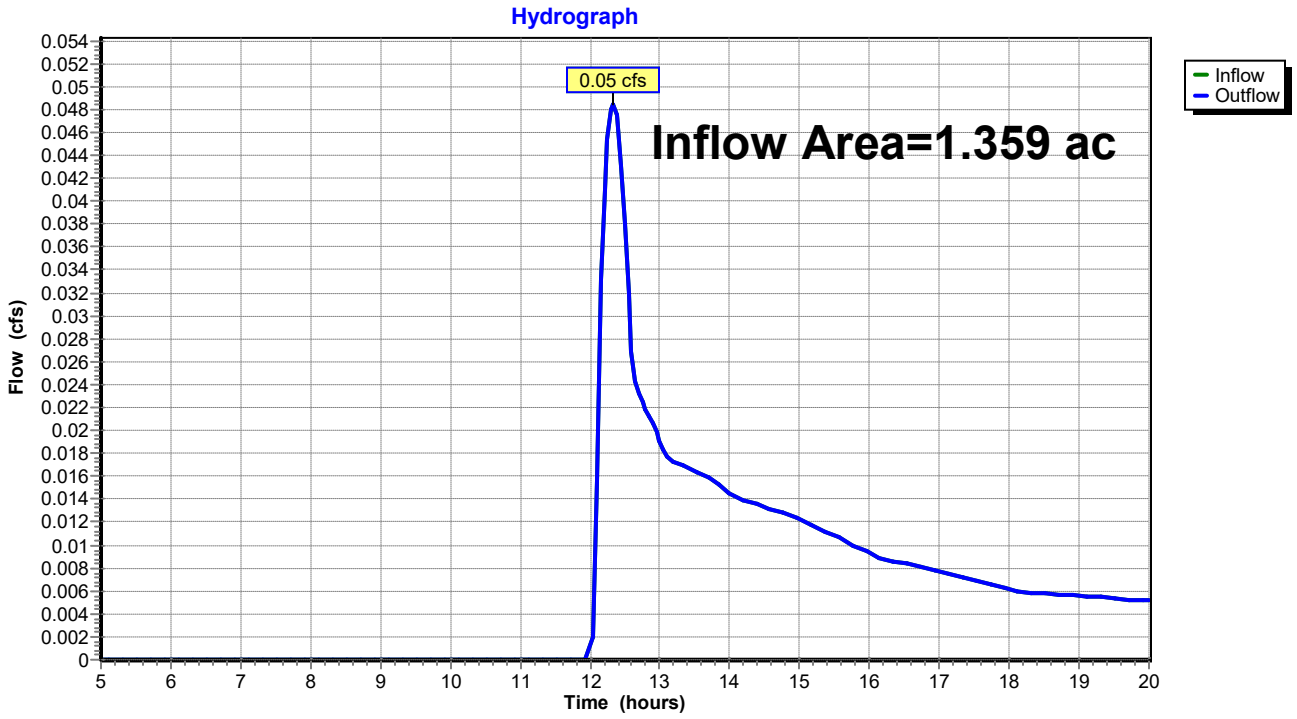

Summary for Reach SP1: SACO RIVER / OCEAN

Inflow Area = 2.557 ac, 11.96% Impervious, Inflow Depth > 0.06" for WQ event
Inflow = 0.09 cfs @ 12.36 hrs, Volume= 0.014 af
Outflow = 0.09 cfs @ 12.36 hrs, Volume= 0.014 af, Atten= 0%, Lag= 0.0 min

Routing by Stor-Ind method, Time Span= 5.00-20.00 hrs, dt= 0.05 hrs

Reach SP1: SACO RIVER / OCEAN

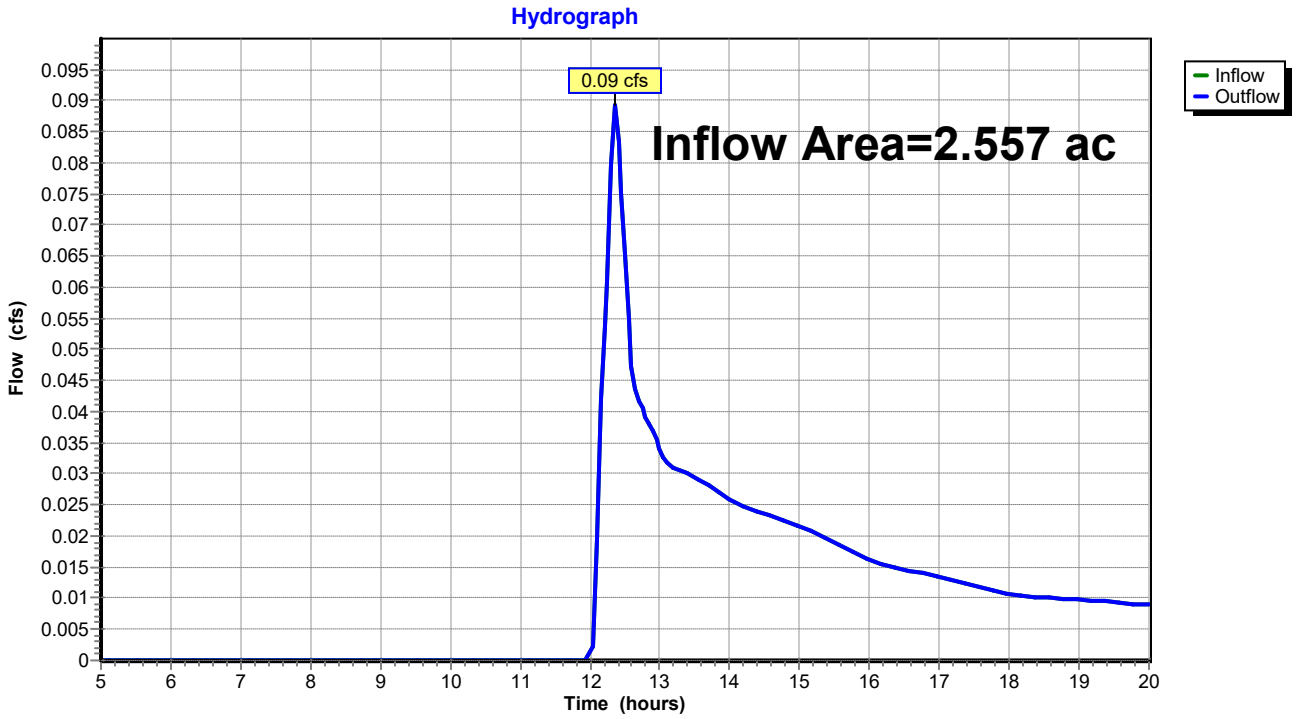

Summary for Pond 1P: Bioretention Filter Cell 1

Inflow Area = 0.226 ac, 50.01% Impervious, Inflow Depth > 0.20" for WQ event
Inflow = 0.06 cfs @ 12.03 hrs, Volume= 0.004 af
Outflow = 0.02 cfs @ 12.36 hrs, Volume= 0.003 af, Atten= 58%, Lag= 19.8 min
Primary = 0.02 cfs @ 12.36 hrs, Volume= 0.003 af
Routed to Pond 2P : CB-1

Routing by Stor-Ind method, Time Span= 5.00-20.00 hrs, dt= 0.05 hrs
Peak Elev= 18.01' @ 12.36 hrs Surf.Area= 217 sf Storage= 56 cf

Plug-Flow detention time= 130.6 min calculated for 0.003 af (67% of inflow)
Center-of-Mass det. time= 53.4 min (884.3 - 831.0)

Volume	Invert	Avail.Storage	Storage Description
#1	17.50'	200 cf	**Custom Stage Data (Prismatic)** Listed below (Recalc)

Elevation (feet)	Surf.Area (sq-ft)	Inc.Store (cubic-feet)	Cum.Store (cubic-feet)
17.50	0	0	0
18.00	213	53	53
18.50	372	146	200

Device	Routing	Invert	Outlet Devices
#1	Primary	18.00'	**18.0" Horiz. Orifice/Grate** C= 0.600 in 24.0" Grate (56% open area) Limited to weir flow at low heads

Primary OutFlow Max=0.02 cfs @ 12.36 hrs HW=18.01' (Free Discharge)
↑**1=Orifice/Grate** (Weir Controls 0.02 cfs @ 0.37 fps)

Pond 1P: Bioretention Filter Cell 1

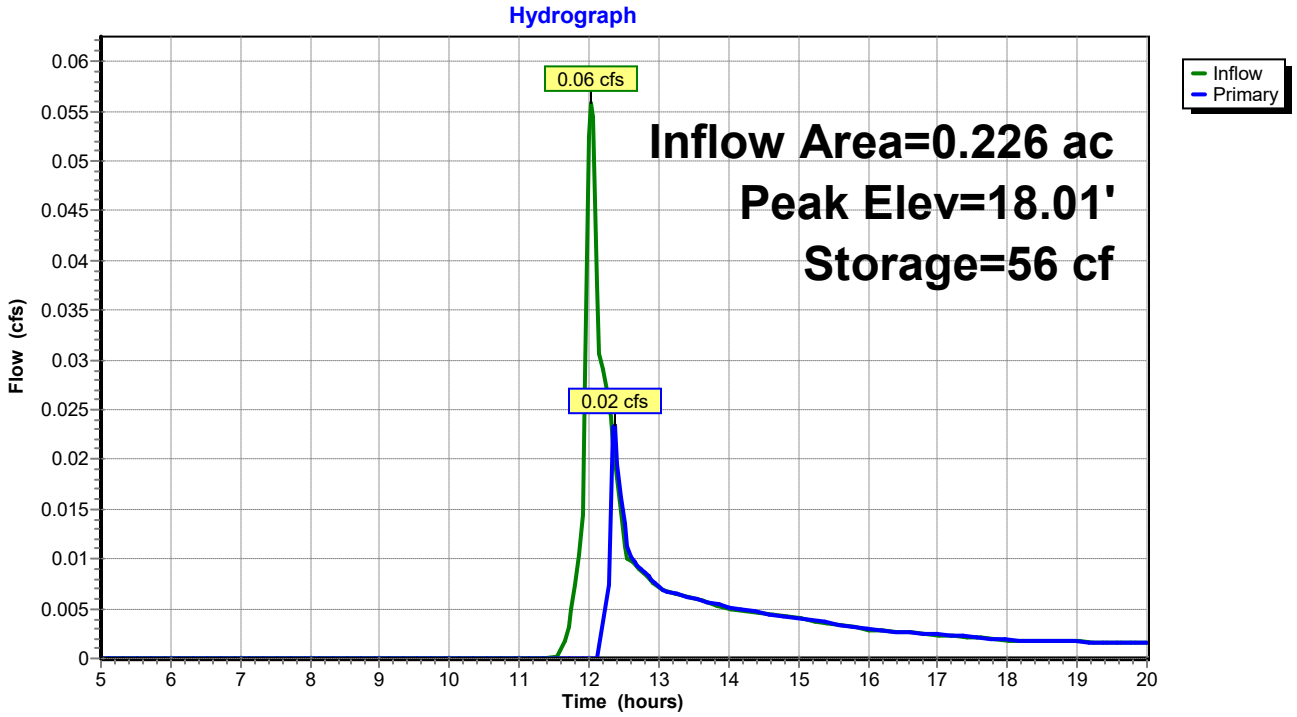

Summary for Pond 2P: CB-1

Inflow Area = 0.226 ac, 50.01% Impervious, Inflow Depth > 0.14" for WQ event
Inflow = 0.02 cfs @ 12.36 hrs, Volume= 0.003 af
Outflow = 0.02 cfs @ 12.36 hrs, Volume= 0.003 af, Atten= 0%, Lag= 0.0 min
Primary = 0.02 cfs @ 12.36 hrs, Volume= 0.003 af
Routed to Reach 1R : Reach 1

Routing by Stor-Ind method, Time Span= 5.00-20.00 hrs, dt= 0.05 hrs
Peak Elev= 13.83' @ 12.36 hrs

Device	Routing	Invert	Outlet Devices
#1	Primary	13.75'	**15.0" Round Culvert** L= 48.0' CPP, projecting, no headwall, Ke= 0.900 Inlet / Outlet Invert= 13.75' / 12.00' S= 0.0365 '/' Cc= 0.900 n= 0.013 Corrugated PE, smooth interior, Flow Area= 1.23 sf

Primary OutFlow Max=0.02 cfs @ 12.36 hrs HW=13.83' (Free Discharge)
1=Culvert (Inlet Controls 0.02 cfs @ 0.74 fps)

Pond 2P: CB-1

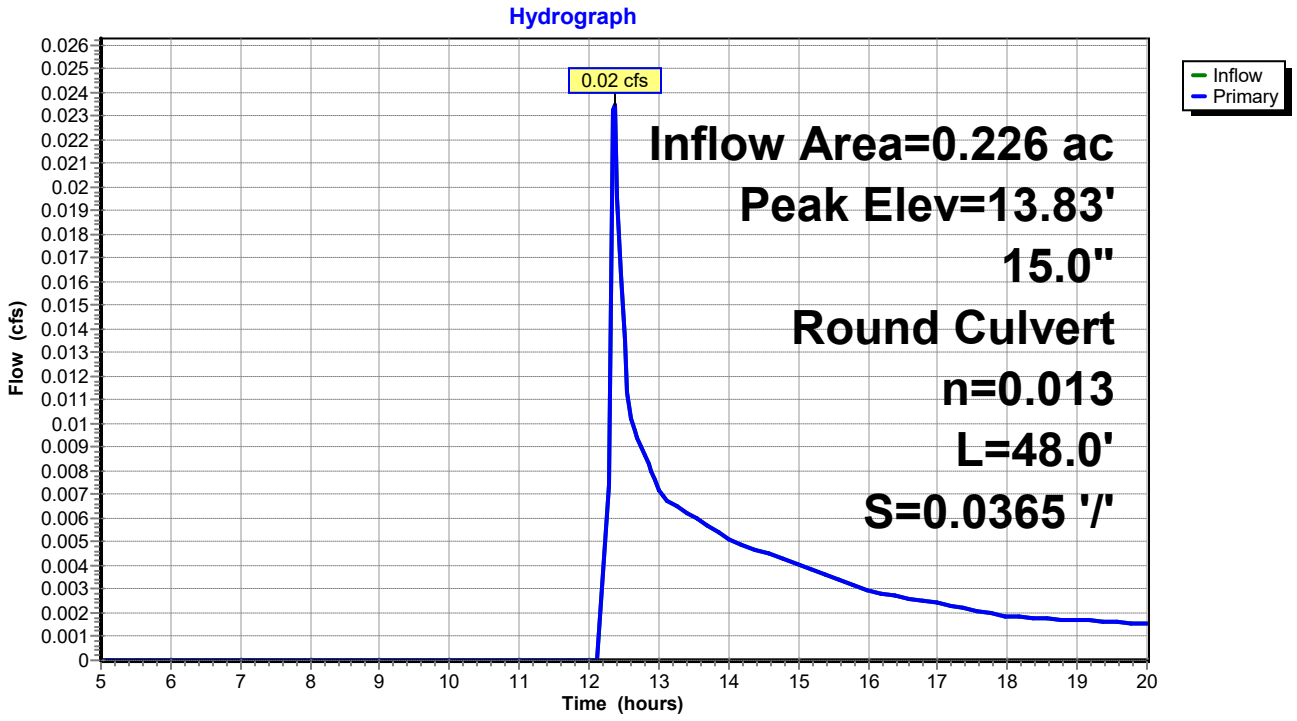

Summary for Pond 3P: Bioretention Filter Cell 2

Inflow Area = 0.307 ac, 33.49% Impervious, Inflow Depth > 0.13" for WQ event
Inflow = 0.04 cfs @ 12.11 hrs, Volume= 0.003 af
Outflow = 0.02 cfs @ 12.48 hrs, Volume= 0.002 af, Atten= 56%, Lag= 22.5 min
Primary = 0.02 cfs @ 12.48 hrs, Volume= 0.002 af
Routed to Pond 4P : CB-2

Routing by Stor-Ind method, Time Span= 5.00-20.00 hrs, dt= 0.05 hrs
Peak Elev= 23.51' @ 12.48 hrs Surf.Area= 171 sf Storage= 44 cf

Plug-Flow detention time= 120.8 min calculated for 0.002 af (72% of inflow)
Center-of-Mass det. time= 48.7 min (900.5 - 851.8)

Volume	Invert	Avail.Storage	Storage Description
#1	23.00'	380 cf	**Custom Stage Data (Prismatic)** Listed below (Recalc)

Elevation (feet)	Surf.Area (sq-ft)	Inc.Store (cubic-feet)	Cum.Store (cubic-feet)
23.00	0	0	0
24.00	335	168	168
24.50	515	213	380

Device	Routing	Invert	Outlet Devices
#1	Primary	23.50'	**18.0" Horiz. Orifice/Grate** C= 0.600 in 24.0" Grate (56% open area) Limited to weir flow at low heads

Primary OutFlow Max=0.02 cfs @ 12.48 hrs HW=23.51' (Free Discharge)
↑**1=Orifice/Grate** (Weir Controls 0.02 cfs @ 0.33 fps)

Pond 3P: Bioretention Filter Cell 2

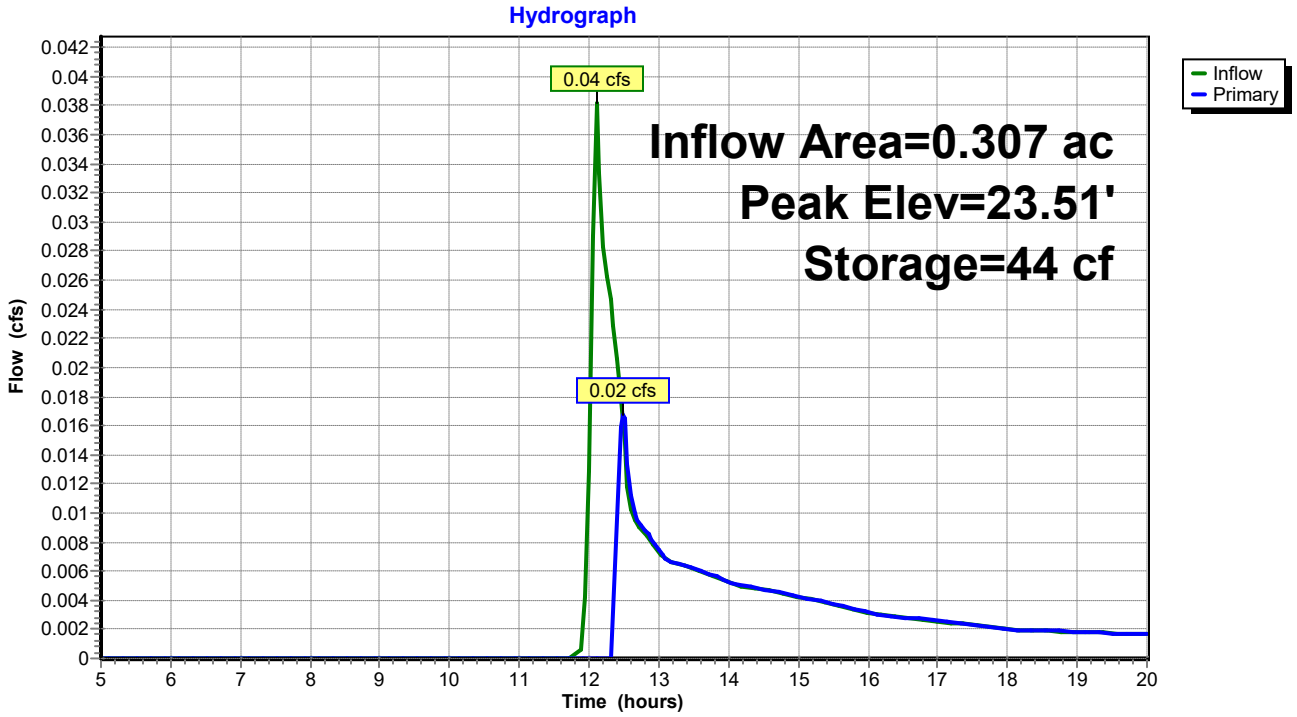

Summary for Pond 4P: CB-2

Inflow Area = 0.307 ac, 33.49% Impervious, Inflow Depth > 0.10" for WQ event
Inflow = 0.02 cfs @ 12.48 hrs, Volume= 0.002 af
Outflow = 0.02 cfs @ 12.48 hrs, Volume= 0.002 af, Atten= 0%, Lag= 0.0 min
Primary = 0.02 cfs @ 12.48 hrs, Volume= 0.002 af
Routed to Pond 5P : Level Lip Speader

Routing by Stor-Ind method, Time Span= 5.00-20.00 hrs, dt= 0.05 hrs
Peak Elev= 18.81' @ 12.48 hrs

Device	Routing	Invert	Outlet Devices
#1	Primary	18.75'	**18.0" Round Culvert** L= 40.0' CPP, projecting, no headwall, Ke= 0.900 Inlet / Outlet Invert= 18.75' / 18.00' S= 0.0187 '/' Cc= 0.900 n= 0.013 Corrugated PE, smooth interior, Flow Area= 1.77 sf

Primary OutFlow Max=0.02 cfs @ 12.48 hrs HW=18.81' (Free Discharge)
1=Culvert (Inlet Controls 0.02 cfs @ 0.66 fps)

Pond 4P: CB-2

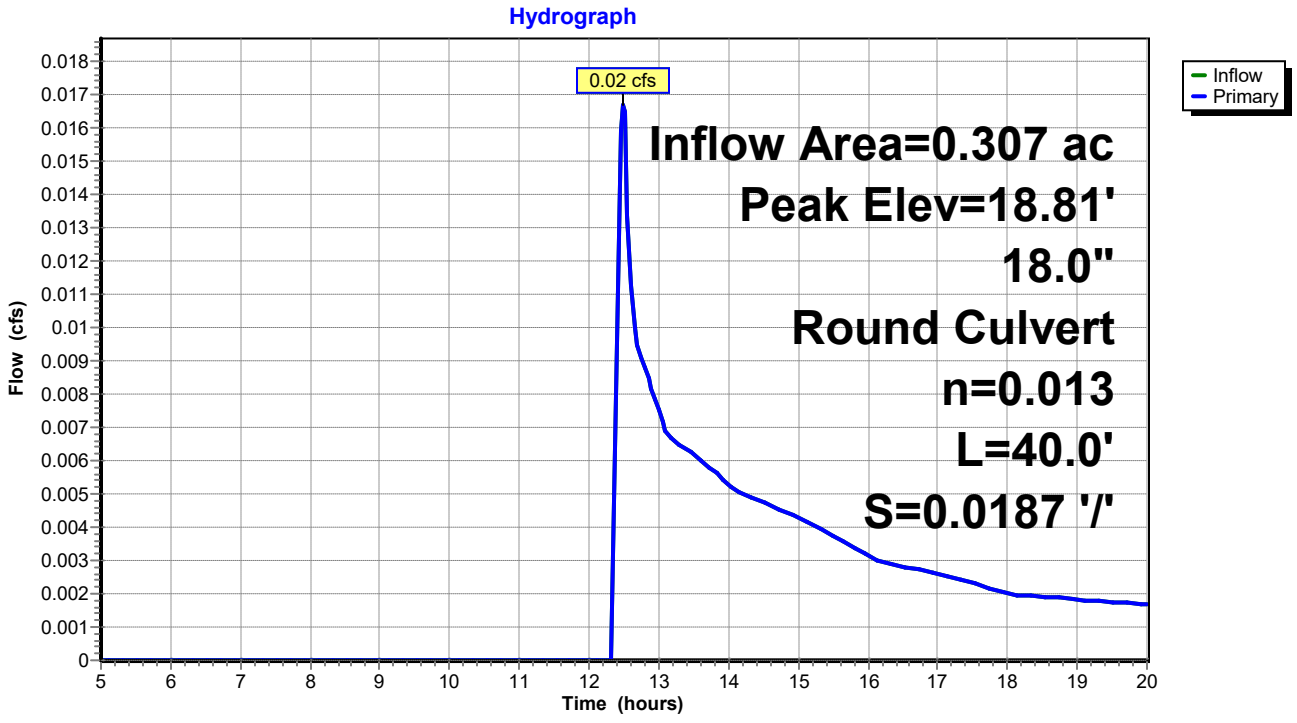

Summary for Pond 5P: Level Lip Speader

Inflow Area = 0.307 ac, 33.49% Impervious, Inflow Depth > 0.10" for WQ event
Inflow = 0.02 cfs @ 12.48 hrs, Volume= 0.002 af
Outflow = 0.00 cfs @ 5.00 hrs, Volume= 0.000 af, Atten= 100%, Lag= 0.0 min
Primary = 0.00 cfs @ 5.00 hrs, Volume= 0.000 af
Routed to Reach 2R : Reach 2

Routing by Stor-Ind method, Time Span= 5.00-20.00 hrs, dt= 0.05 hrs
Peak Elev= 17.95' @ 20.00 hrs Surf.Area= 163 sf Storage= 106 cf
Flood Elev= 20.00' Surf.Area= 168 sf Storage= 115 cf

Plug-Flow detention time= (not calculated: initial storage exceeds outflow)
Center-of-Mass det. time= (not calculated: no outflow)

Volume	Invert	Avail.Storage	Storage Description
#1	17.00'	115 cf	**Custom Stage Data (Prismatic)** Listed below (Recalc)

Elevation (feet)	Surf.Area (sq-ft)	Voids (%)	Inc.Store (cubic-feet)	Cum.Store (cubic-feet)
17.00	61	0.0	0	0
18.00	168	100.0	115	115

Device	Routing	Invert	Outlet Devices
#0	Primary	18.00'	**Automatic Storage Overflow** (Discharged without head)

Primary OutFlow Max=0.00 cfs @ 5.00 hrs HW=17.00' (Free Discharge)

Pond 5P: Level Lip Speader

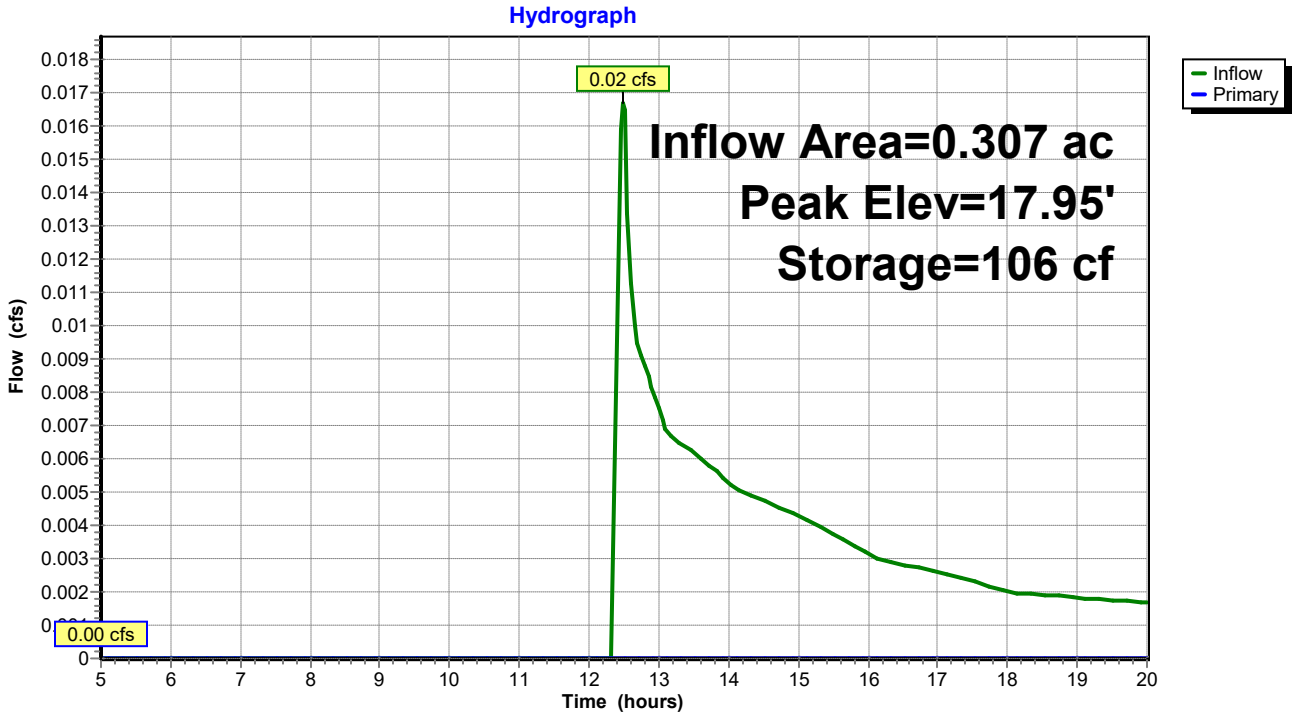

Summary for Link DP1: DP1

Inflow Area = 0.489 ac, 28.87% Impervious, Inflow Depth > 0.09" for WQ event
Inflow = 0.03 cfs @ 12.36 hrs, Volume= 0.004 af
Primary = 0.03 cfs @ 12.36 hrs, Volume= 0.004 af, Atten= 0%, Lag= 0.0 min
Routed to Reach SP1 : SACO RIVER / OCEAN

Primary outflow = Inflow, Time Span= 5.00-20.00 hrs, dt= 0.05 hrs

Link DP1: DP1

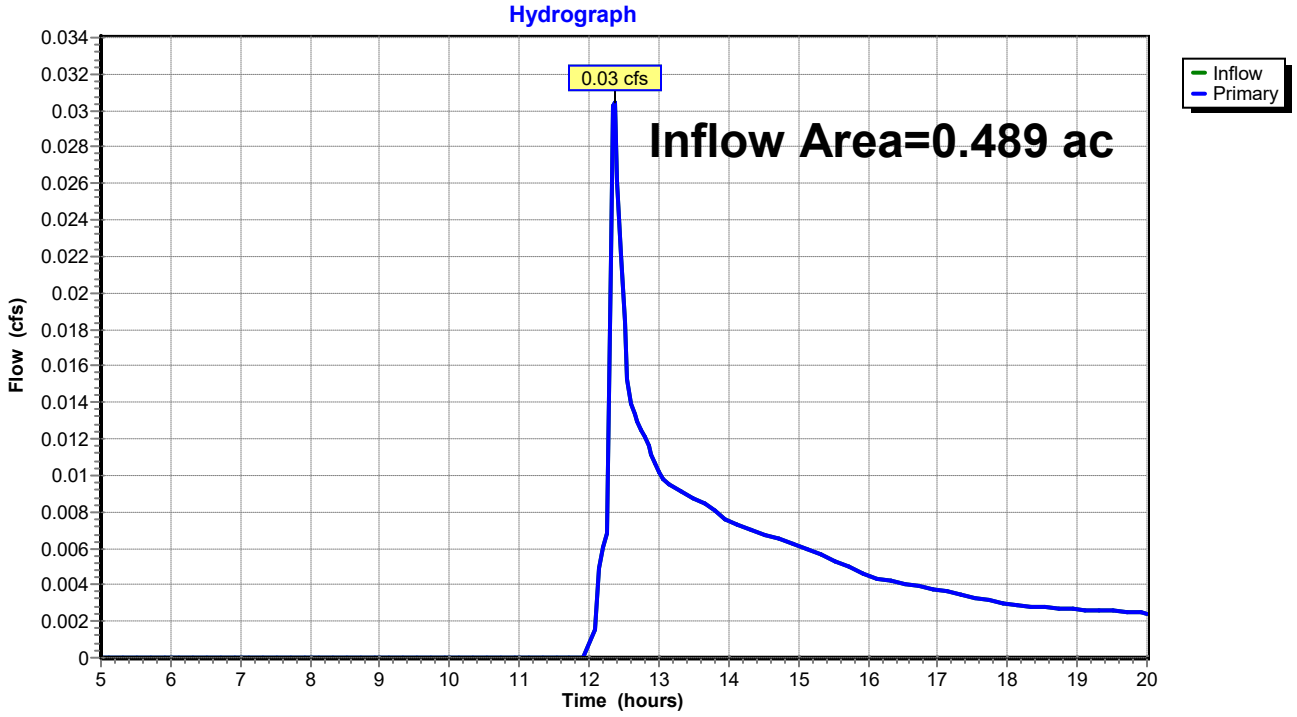

Summary for Link DP2: DP2

Inflow Area = 0.709 ac, 15.44% Impervious, Inflow Depth > 0.03" for WQ event
Inflow = 0.01 cfs @ 12.38 hrs, Volume= 0.002 af
Primary = 0.01 cfs @ 12.38 hrs, Volume= 0.002 af, Atten= 0%, Lag= 0.0 min
Routed to Reach SP1 : SACO RIVER / OCEAN

Primary outflow = Inflow, Time Span= 5.00-20.00 hrs, dt= 0.05 hrs

Link DP2: DP2

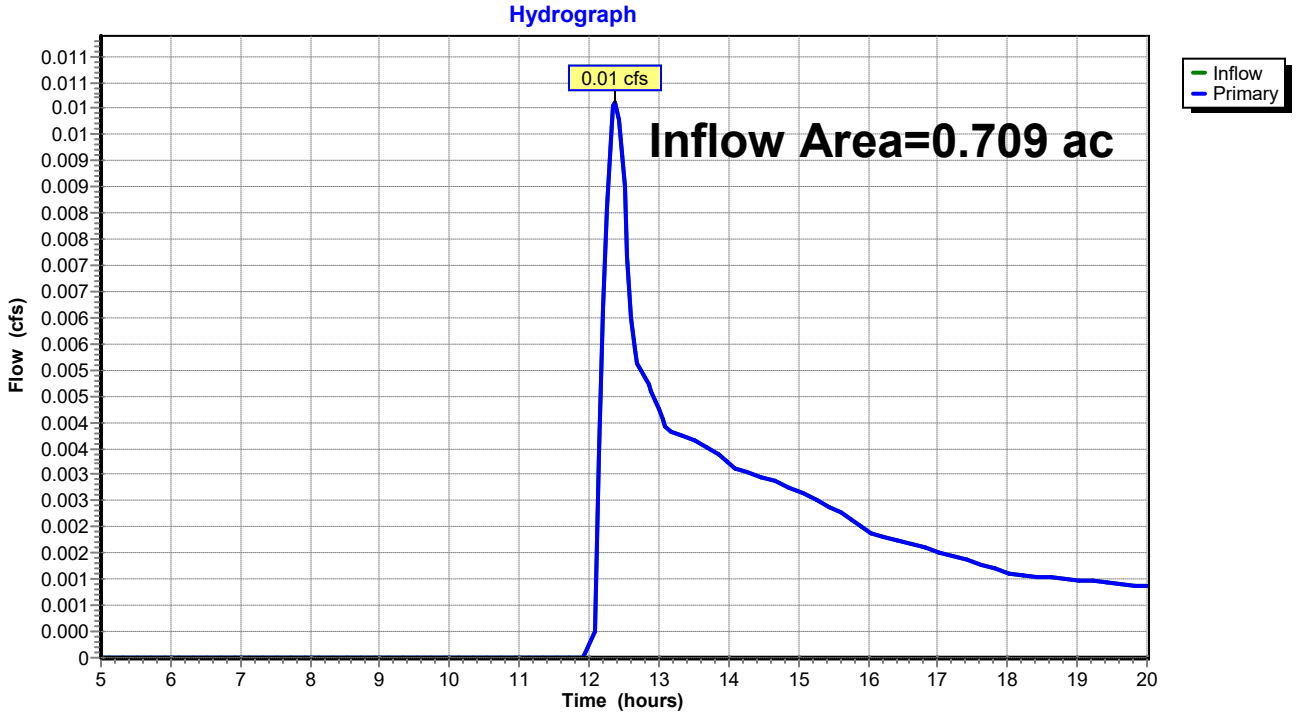

TABLE OF CONTENTS

Project Reports
1 Routing Diagram
2 Project Notes
3 Rainfall Events Listing
4 Area Listing (all nodes)
5 Soil Listing (all nodes)
6 Ground Covers (all nodes)
7 Pipe Listing (all nodes)

2-yr Event
8 Node Listing
10 Subcat 1S: Post Subcatchment 1
12 Subcat 2S: Post Subcatchment 2
13 Subcat 3S: Post Subcatchment 3
15 Subcat 4S: Post Subcatchment 4
16 Subcat 5S: Post Subcatchment 5
18 Reach 1R: Reach 1
19 Reach 2R: Reach 2
20 Reach DP3: Shoreline 3
21 Reach SP1: SACO RIVER / OCEAN
22 Pond 1P: Bioretention Filter Cell 1
24 Pond 2P: CB-1
25 Pond 3P: Bioretention Filter Cell 2
27 Pond 4P: CB-2
28 Pond 5P: Level Lip Speader
30 Link DP1: DP1
31 Link DP2: DP2

10-yr Event
32 Node Listing
34 Subcat 1S: Post Subcatchment 1
36 Subcat 2S: Post Subcatchment 2
37 Subcat 3S: Post Subcatchment 3
39 Subcat 4S: Post Subcatchment 4
40 Subcat 5S: Post Subcatchment 5
42 Reach 1R: Reach 1
43 Reach 2R: Reach 2
44 Reach DP3: Shoreline 3
45 Reach SP1: SACO RIVER / OCEAN
46 Pond 1P: Bioretention Filter Cell 1
48 Pond 2P: CB-1
49 Pond 3P: Bioretention Filter Cell 2
51 Pond 4P: CB-2
52 Pond 5P: Level Lip Speader
54 Link DP1: DP1
55 Link DP2: DP2

25-yr Event

56 Node Listing
58 Subcat 1S: Post Subcatchment 1
60 Subcat 2S: Post Subcatchment 2
61 Subcat 3S: Post Subcatchment 3
63 Subcat 4S: Post Subcatchment 4
64 Subcat 5S: Post Subcatchment 5
66 Reach 1R: Reach 1
67 Reach 2R: Reach 2
68 Reach DP3: Shoreline 3
69 Reach SP1: SACO RIVER / OCEAN
70 Pond 1P: Bioretention Filter Cell 1
72 Pond 2P: CB-1
73 Pond 3P: Bioretention Filter Cell 2
75 Pond 4P: CB-2
76 Pond 5P: Level Lip Speader
78 Link DP1: DP1
79 Link DP2: DP2

100-yr Event

80 Node Listing
82 Subcat 1S: Post Subcatchment 1
84 Subcat 2S: Post Subcatchment 2
85 Subcat 3S: Post Subcatchment 3
87 Subcat 4S: Post Subcatchment 4
88 Subcat 5S: Post Subcatchment 5
90 Reach 1R: Reach 1
91 Reach 2R: Reach 2
92 Reach DP3: Shoreline 3
93 Reach SP1: SACO RIVER / OCEAN
94 Pond 1P: Bioretention Filter Cell 1
96 Pond 2P: CB-1
97 Pond 3P: Bioretention Filter Cell 2
99 Pond 4P: CB-2
100 Pond 5P: Level Lip Speader
102 Link DP1: DP1
103 Link DP2: DP2

WQ Event

104 Node Listing
106 Subcat 1S: Post Subcatchment 1
108 Subcat 2S: Post Subcatchment 2
109 Subcat 3S: Post Subcatchment 3
111 Subcat 4S: Post Subcatchment 4
112 Subcat 5S: Post Subcatchment 5
114 Reach 1R: Reach 1
115 Reach 2R: Reach 2
116 Reach DP3: Shoreline 3

117 Reach SP1: SACO RIVER / OCEAN
118 Pond 1P: Bioretention Filter Cell 1
120 Pond 2P: CB-1
121 Pond 3P: Bioretention Filter Cell 2
123 Pond 4P: CB-2
124 Pond 5P: Level Lip Speader
126 Link DP1: DP1
127 Link DP2: DP2

Pipe Schedule
UNE Marine Sciene Center Pier
Biddeford, Maine

PROPOSED PIPES (BIORETENTION FILTER CELLS)

From	Inv	To	Inv	AREAS Paved 0.98	AREAS Open 'C' 0.61	AREAS Total (sf)	C	A (ac)	CA (ac)	ΣCA (ac)	Tc (min)	i25 (in/hr)	Q25 (req) (CFS)	Type	Pipe n	Leng (ft)	Dia (in)	Slope (%)	Vel ¼ Full (ft/sec)	Vel (ft/sec)	Q (prov) (CFS)	Q (Prov) > Q (Req'd)
SF-A	18.75	**18" Outfall**	18.00	3,935	5,897	9,832	FLOW FROM HYDROLOGY MODEL						1.33	HDPE	0.012	40	18	1.88%	6.18	8.82	15.58	good
SF-B	13.75	**15" Outfall**	12.00	3,768	9,597	13,365	FLOW FROM HYDROLOGY MODEL						1.56	HDPE	0.012	48	15	3.65%	7.63	10.89	13.36	good

Appendix D

Inspection and Maintenance Plan

Owner Responsible for Maintenance

All maintenance plans for stormwater management measures must include the following:

> The name, address, and telephone number of the person or persons responsible for the preventative and corrective maintenance of the stormwater management measure. If the plan identifies a party other than the owner or developer as having responsibility for maintenance, i.e., a public entity or homeowners' association, the plan must include a copy of the other party's written agreement to assume this responsibility. This agreement must include a copy of any ordinance or regulation that requires the owner or developer to dedicate the stormwater management measure and/or its maintenance to the other party.

Information of the Person Responsible for Maintenance:

Name:

Address:

Telephone:

If an entity other than the above listed property owner or the developer will have the responsibility for stormwater pond maintenance, then they will provide a copy of the designated party's written agreement to assume this responsibility.

University of New England
Biddeford, Maine
June 2025

INSPECTION AND MAINTENANCE PLAN OF STORMWATER MANAGEMENT FACILITIES

Stormwater Management Facilities include swales, paved surfaces, manholes and catch basins, drain pipe, riprapped aprons, level spreaders, wooded buffers, and bioretention filter cells. Periodic inspection and maintenance of these site features and devices is necessary to prevent erosion, protect roadways and other paved areas, and remove pollutants from stormwater runoff. Best management practices and stormwater facilities should be inspected as noted below, and after a rainfall event of 1" or more in 24 hours.

University of New England Facilities Department is responsible for the inspections and maintenance of stormwater facilities associated with this project.

SWALES, DITCHES, CURBS AND PAVED AREAS:

Swales, ditches, curbs and paved areas are easily inspected during a site walk or even a ride-by. Since visual inspection is easy, their condition should be assessed during and/or after significant rainfall events such as thunder showers and periods of heavy or extended rainfall and during periods of significant snowmelt. Any damage or unusual condition such as sedimentation of a ditch, erosion, damaged curb or dying vegetation should be recorded, dated and initialed by the inspector when observed. Even if there is no damage, the inspector should make record of these inspections at least twice annually.

Paved areas should be visually inspected monthly during the winter. The inspector should pay particular attention to the build up of sand around catch basin grates and remove accumulations that block the free flow of surface runoff to the catch basins. The date and initials of the inspector should be recorded on the forms provided as well as a notation of any cleanup effort that was made and the approximate volume of sand that was removed.

Open swales and ditches shall be inspected twice per year (in spring and fall) to assure that debris and/or sediments do not reduce the effectiveness of the system. Debris and sediments shall be removed at that time. Any sign of erosion or blockage shall be immediately repaired to assure a vigorous growth of vegetation for the stability of the ditches and slopes proper function. Maintenance shall include, but not be limited to, mowing, trimming and removal of vegetation in the ditches and slopes as required in order to prevent vegetation from blocking or diverting storm flows, replacement of riprap channel lining to prevent scour of the channel invert, removing vegetation and debris from the culverts.

Vegetated ditches should be mowed at least monthly during the growing season. Larger brush or trees must not be allowed to become established in the channel. Any areas where the vegetation fails will be subject to erosion and should be reseeded and mulched immediately.

CATCH BASINS, FIELD INLETS AND DRAIN MANHOLES:

Catch Basins and field inlets are precast concrete structures with sumps and cast iron grates used to collect stormwater and trap heavy sediments. Drain Manholes are similar structures constructed with a channel instead of a sump and a solid cast iron cover instead of a grate. Drain Manholes exist at changes in direction and/or size of storm drain pipe. Catch Basins, field inlets and drain manholes provide access to the closed storm drain system for inspection and maintenance.

Throughout the winter / spring sanding period, inspect catch basins and field inlets monthly and after every significant rainfall event or period of heavy snowmelt. Clean catch basin and field inlet sumps when sediment level is within 12 inches of the outlet pipe invert. At a minimum, remove floating debris and hydrocarbons at the time of the inspection. The removed material must be disposed of in accordance with the Maine Solid Waste Disposal Rules. Confined space entry safety procedures shall be practiced should entry into these structures be required.

Record dates of inspections, observations and maintenance measures implemented (if any) on the forms provided and initial the entry.

DRAIN PIPES:

Drain pipes are road culverts and pipes connecting drain manholes. Inspect drain pipes when inspecting other stormwater maintenance facilities. At least annually make a visual inspection of the pipe. During the daylight you should be able to see light through most pipes as they have been laid to a straight line and grade. In some cases (e.g. pipe runs to a drain manhole, or is blocked) you will need a light to inspect pipes.

Remove any obstructions to flow; remove accumulated sediments and debris at the inlet, at the outlet, and within the conduit; and to repair any erosion damage at the pipe inlet and outlet. Sediment should be removed when its level exceeds 20% of the pipe diameter. This may be accomplished by hydraulic flushing or any mechanical means; however, care should be taken to contain the sediment at the pipe outlet, and not flush the sediments into the stormwater filter or wetland areas.

Riprap aprons where stone is displaced should be replaced and chinked to assure stability. With time, additional riprap may be added. Vegetation growing through riprap should be removed on an annual basis.

Record inspections on the forms provided noting condition of pipe and any maintenance procedures implemented.

LEVEL SPREADERS:

Level Spreaders are shallow basins or ditches constructed at the ends of ditches or pipe outlets to disperse or "spread" concentrated flow thinly over a receiving area. Level Spreaders are constructed along the natural contour of the land to create a level "lip" on the outlet side. The integrity of the level lip is critical to the proper performance of this device.

Inspect the Level Spreader at least once each season and following significant rainfall events (1 inch or more of rain in 12 hours). Record inspections on the forms provided noting your observations and any corrective action taken. Any sign of erosion or blockage shall be immediately repaired to assure a vigorous growth of vegetation and stability of stone berms for the stability of the level spreader for proper function. Minor regrading, releveling of the stone “lip,” and reseeding

of the level lip on an annual basis should be anticipated. Mow level lips at least twice during the growing season. Maintenance may also include removal of sediment buildup especially on the inlet end.

BIORETENTION FILTER CELLS:

A bioretention filter cells is a landscaped depression with an under drained soil bed or soil filter that exfiltrates the stormwater. The depression is designed to temporarily store runoff, which will drain through the soil filter into the underdrains; excess runoff will flow into structures or over earthen spillways.

Soil Filter Inspection: The soil filter should be inspected after every major storm in the first few months to ensure proper function. Thereafter, the filter should be inspected at least once every six months to ensure that it is draining within 48 hours; and that, after storms that fill the system to overflow, it drains in no less than 24 hours. If the filter drains too rapidly, (i.e. prior to 24 hours), then an adjustable orifice shall be installed on the underdrain outlet pipe. The orifice shall be adjusted such that the filter completely drains within 24 to 72 hours.

Underdrain System: The soil filter outlet consists of a layer of planting loam and sand with a stone and perforated pipe underdrain. Outlet inspections shall include flushing of the underdrain through the cleanouts at the end of the pipes. Trash, sediment, and debris shall be removed from the vicinity of the outlet and must be disposed of in accordance with the Maine Solid Waste Disposal Rules.

Soil Filter Replacement: If the filter fails to drain within 72 hours, the surface of the pond shall be rototilled to promote aeration of the filter media and vegetation shall be re-established. If aeration of the surface soil fails to promote filtration of impounded water within 72 hours, then the filter media shall be replaced as necessary. The stone underdrain shall also be replaced at this time, along with the perforated pipe.

Sediment Removal: Sediment and plant debris should be removed from the pretreatment structure at least annually.

Mowing: Filters with grass cover should be mowed no more than 2 times per growing season to maintain grass heights less than 12 inches.

Fertilization: Fertilization of the bioretention filter cells should be avoided unless absolutely necessary to establish vegetation.

Harvesting and Weeding: Harvesting and pruning of excessive growth will need to be done occasionally. Weeding to control unwanted or invasive plants may also be necessary. Add new mulch as necessary for bioretention cells.

Bioretention Filter Cells shall not be used for snow storage area. Vehicular equipment used to maintain or rehabilitate Bioretention Filter Cells should work from the basin perimeter and not enter the basin area, as this will compact the soil surface and reduce the design infiltration rate. Record all maintenance on forms provided.

SEDIMENT DISPOSAL:

Any sediment or debris removed during maintenance of the stormwater system must be disposed of in accordance with the Maine Solid Waste Disposal Rules.

UNIVERSITY OF NEW ENGLAND
BIDDEFORD, MAINE

INSPECTION / MAINTENANCE LOG

SWALES, DITCHES, CURBS AND PAVED SURFACES

I: INSPECTED - C: CLEANED - S: SWEPT - R: REPAIRED

DATE	INITIALS	ACTION	COMMENT
5/10/19	RST	I, C	EXAMPLE: Removed sand around CB's 19 and 20. Heavy rain over the weekend.

UNIVERSITY OF NEW ENGLAND
BIDDEFORD, MAINE

INSPECTION / MAINTENANCE LOG

CATCH BASINS, FIELD INLETS, AND DRAIN MANHOLES

I: INSPECTED - C: CLEANED - R: REPAIRED

DATE	INITIALS	ACTION	COMMENT
6/13/19	JKL	I, C	EXAMPLE: Called ACME to clean catch basins.

UNIVERSITY OF NEW ENGLAND

BIDDEFORD, MAINE

INSPECTION / MAINTENANCE LOG

DRAIN PIPES

I: INSPECTED - C: CLEANED - R: REPAIRED

DATE	INITIALS	ACTION	COMMENT
4/19/18	JKL	I, C	EXAMPLE: Called ACME to clean debris from culvert inlets along Main Road and Loop Road.

UNIVERSITY OF NEW ENGLAND

BIDDEFORD, MAINE

INSPECTION / MAINTENANCE LOG

LEVEL SPREADERS

I: INSPECTED - C: CLEANED - R: REPAIRED

DATE	INITIALS	ACTION	COMMENT
8/16/19	JKL	I, C	EXAMPLE: Inspected level spreaders on site, found minimal sediment build up, stone lips appeared consistently level and functional. Mowed level lips.

UNIVERSITY OF NEW ENGLAND

BIDDEFORD, MAINE

INSPECTION / MAINTENANCE LOG

BIORETENTION FILTER CELLS

I: INSPECTED - C: CLEANED - R: REPAIRED

DATE	INITIALS	Unit #	ACTION	COMMENT
7/6/19	PQR	LA2	I, C	EXAMPLE: Cleared sediment and plant debris from inlet area, mowed filter area, crest, and sideslopes.

STORMWATER MANAGEMENT SYSTEM
MAINTENANCE PROGRAM
SUMMARY CHECKLIST

Item	Commentary	Frequency			
		Month	Semi-Annual	Annual	Long-Term
All Pond and Filter side slopes	Inspect slopes for sloughing, erosion or undesirable tree growth. Mow slopes to control vegetation, repair any structure flaws identified	**X Mow Summer**		**X**	
All Pond and Filter Sediment Removal	Remove sediment when it occupies 15% of volume.				**X 5 Years**
Open Swale, Ditches & Inlet Structures	Inspect for debris accumulation, erosion and excessive vegetation. Mow monthly, remove debris, repair and revegetate any area of erosion	**X Mow**		**X**	
Pavement	Review for damage and buildup of debris and sand.	**X**	**X Sweep**		
Level Spreaders	Review level lip for stability and grass growth, remove sediment and debris		**X**		
Catchbasin and Drain Manholes	Inspect grates to assure optimum water flows into the structures. Inspect sumps for blockage and sediment accumulation. Clean out sumps .	**X Inspect**		**X Sediment removal**	
Pipelines	Inspect for sediment build-up in pipe. Flush and remove as required.			**X**	
Bioretention Filter Cells	Mow twice per year. Inspect for erosion.		**X**		

Drawings

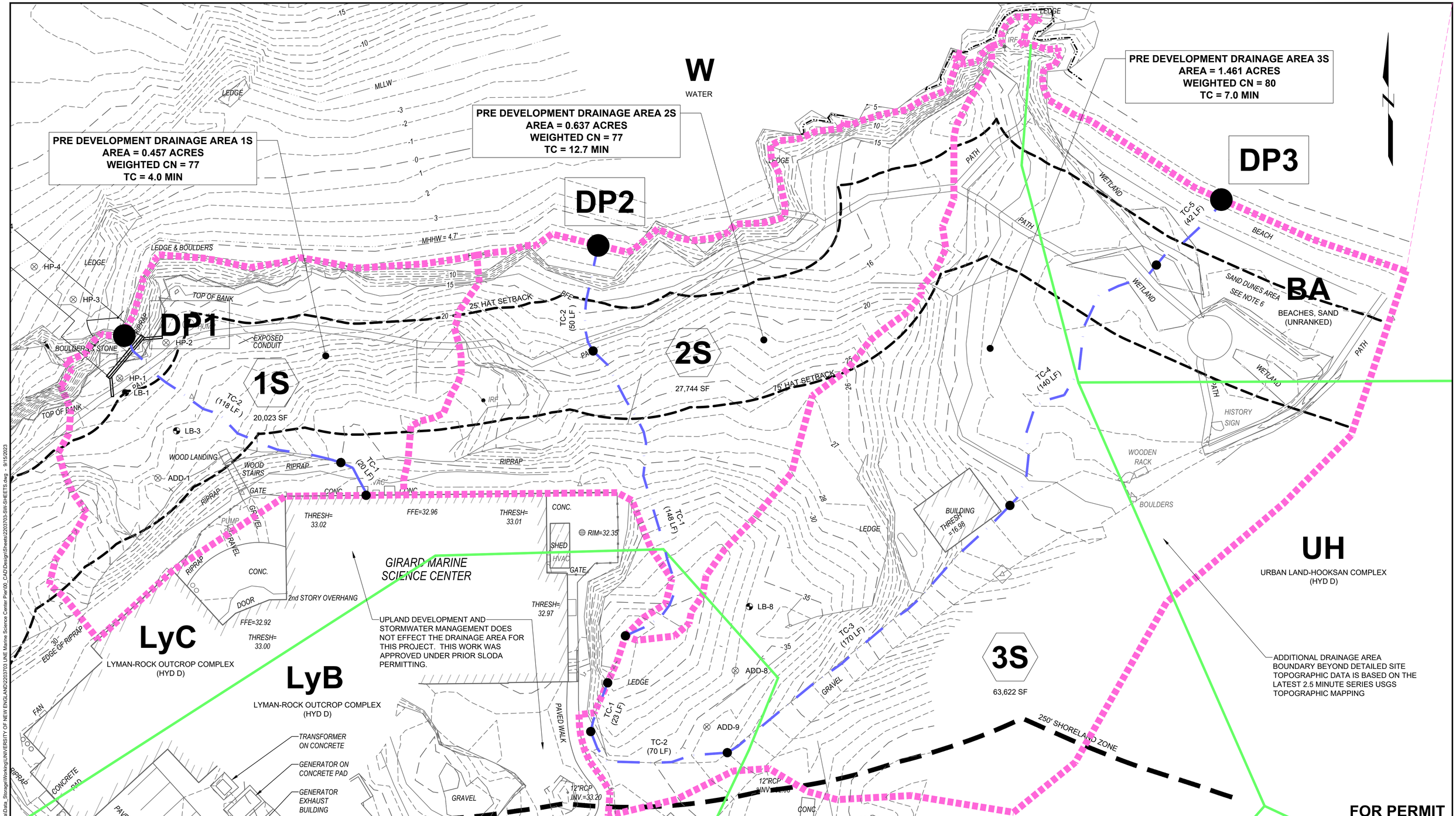

FOR PERMIT

0 20 40
SCALE, FEET

Attention:
0 1"
If this scale bar does not measure 1" then drawing is not original scale.

Designed:	DJB
Drawn:	JAM
Checked:	BJB
Approved:	BMM
P.E. No:	13033
GEI Project	2203703

GEI Consultants
GEI CONSULTANTS, INC.
5 MILK STREET
PORTLAND, ME 04101
(207)797-8901

UNE
UNIVERSITY OF NEW ENGLAND
11 HILLS BEACH RD.
BIDDEFORD, MAINE

UNIVERSITY OF NEW ENGLAND MARINE SCIENCE CENTER PIER
11 HILLS BEACH ROAD
BIDDEFORD, YORK COUNTY, MAINE

NO	DATE	ISSUE/REVISION	APP
4	9/14/2023	DEP PERMIT SET	DJB
3	6/28/2023	75% DESIGN SUBMISSION	DJB
2	2/15/2023	30% DESIGN SUBMISSION	DJB
1	12/9/2022	15% DESIGN SUBMISSIONREV	DJB
0	11/11/2022	15% DESIGN SUBMISSION	DJB

SHEET NAME
PRE-DEVELOPMENT DRAINAGE PLAN

SHEET NO.
SW-01

DICASTELNUOVO, VINNIE \\geiconsultants.com\Data\Data_Storage\Working\UNIVERSITY OF NEW ENGLAND\2203703 UNE Marine Science Center Pier\00_CAD\Design\Sheets\2203703-SW-SHEETS.dwg - 9/15/2023

POST DEVELOPMENT DRAINAGE AREA 2S
AREA=0.264 ACRES
WEIGHTED CN=79
TC=3.4 MIN

POST DEVELOPMENT DRAINAGE AREA 4S
AREA=0.402 ACRES
WEIGHTED CN=79
TC=7.2 MIN

POST DEVELOPMENT DRAINAGE AREA 1S
AREA=0.226 ACRES
WEIGHTED CN=87
TC=0.8 MIN

POST DEVELOPMENT DRAINAGE AREA 5S
AREA=1.359 ACRES
WEIGHTED CN=80
TC=7.0 MIN

POST DEVELOPMENT DRAINAGE AREA 3S
AREA=0.307 ACRES
WEIGHTED CN=84
TC=4.9 MIN

W
WATER

DP1
DP2
DP3

1S
1P
2S
3S
3P
4S
5S
5P
R1
R2

BA
BEACHES, SAND
(UNRANKED)

UH
URBAN LAND-HOOKSAN COMPLEX
(HYD D)

LyC
LYMAN-ROCK OUTCROP COMPLEX
(HYD D)

LyB
LYMAN-ROCK OUTCROP COMPLEX
(HYD D)

UPLAND DEVELOPMENT AND STORMWATER MANAGEMENT DOES NOT EFFECT THE DRAINAGE AREA FOR THIS PROJECT. THIS WORK WAS APPROVED UNDER PRIOR SLODA PERMITTING.

ADDITIONAL DRAINAGE AREA BOUNDARY BEYOND DETAILED SITE TOPOGRAPHIC DATA IS BASED ON THE LATEST 2.5 MINUTE SERIES USGS TOPOGRAPHIC MAPPING

10,250 SF
9,832 SF
830 SF
580 SF
13,365 SF
17,529 SF
59,179 SF

250' SHORELAND ZONE
25' HAT SETBACK
75' HAT SETBACK

FOR PERMIT

Attention:
0 1"
If this scale bar does not measure 1" then drawing is not original scale.

0 20 40
SCALE, FEET

Designed:	DJB
Drawn:	JAM
Checked:	BJB
Approved:	BMM
P.E. No:	13033
GEI Project	2203703

GEI Consultants
GEI CONSULTANTS, INC.
5 MILK STREET
PORTLAND, ME 04101
(207)797-8901

UNIVERSITY OF NEW ENGLAND
11 HILLS BEACH RD.
BIDDEFORD, MAINE

UNIVERSITY OF NEW ENGLAND MARINE SCIENCE CENTER PIER
11 HILLS BEACH ROAD
BIDDEFORD, YORK COUNTY, MAINE

NO	DATE	ISSUE/REVISION	APP
4	9/14/2023	DEP PERMIT SET	DJB
3	6/28/2023	75% DESIGN SUBMISSION	DJB
2	2/15/2023	30% DESIGN SUBMISSION	DJB
1	12/9/2022	15% DESIGN SUBMISSIONREV	DJB
0	11/11/2022	15% DESIGN SUBMISSION	DJB

SHEET NAME
POST-DEVELOPMENT DRAINAGE PLAN

SHEET NO.
SW-02

DICASTELNUOVO, VINNIE \\geiconsultants.com\Data\Data_Storage\Working\UNIVERSITY OF NEW ENGLAND\2203703 UNE Marine Science Center Pier\00_CAD\Design\Sheets\2203703-SW-SHEETS.dwg - 9/15/2023

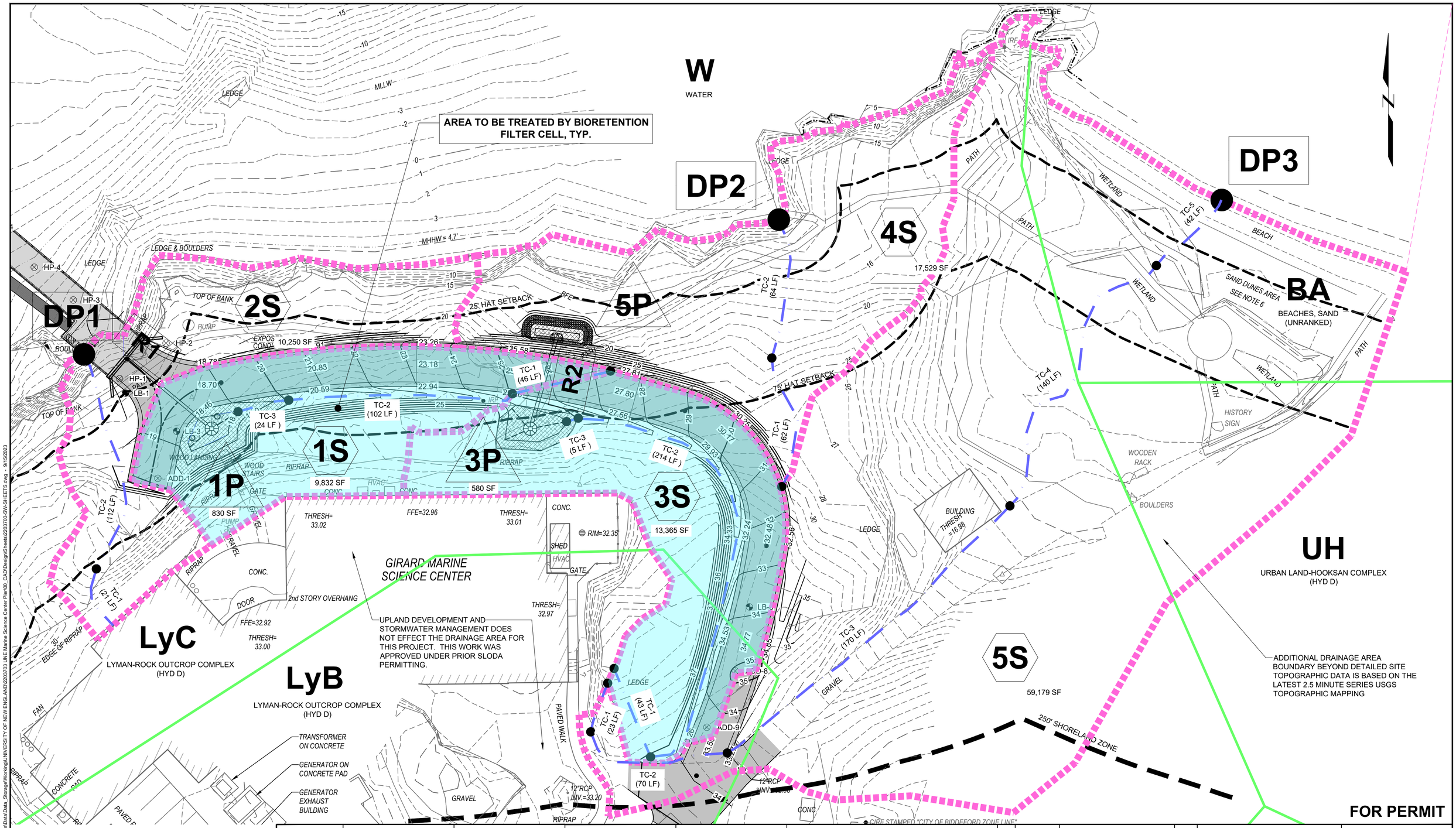

Attention:

0 1"

If this scale bar does not measure 1" then drawing is not original scale.

Designed:	DJB
Drawn:	JAM
Checked:	BJB
Approved:	BMM
P.E. No:	13033
GEI Project	2203703

GEI Consultants
GEI CONSULTANTS, INC.
5 MILK STREET
PORTLAND, ME 04101
(207)797-8901

UNE
UNIVERSITY OF NEW ENGLAND
11 HILLS BEACH RD.
BIDDEFORD, MAINE

UNIVERSITY OF NEW ENGLAND MARINE SCIENCE CENTER PIER

11 HILLS BEACH ROAD
BIDDEFORD, YORK COUNTY, MAINE

NO	DATE	ISSUE/REVISION	APP
4	9/14/2023	DEP PERMIT SET	DJB
3	6/28/2023	75% DESIGN SUBMISSION	DJB
2	2/15/2023	30% DESIGN SUBMISSION	DJB
1	12/9/2022	15% DESIGN SUBMISSIONREV	DJB
0	11/11/2022	15% DESIGN SUBMISSION	DJB

SHEET NAME: **TREATMENT AREA PLAN**

SHEET NO.: **SW-03**

FOR PERMIT

DiCASTELNUOVO, VINNIE \\geiconsultants.com\Data\Data_Storage\Working\UNIVERSITY OF NEW ENGLAND\2203703 UNE Marine Science Center Pier\00_CAD\Design\Sheets\2203703-SW-SHEETS.dwg - 9/15/2023

Attachment 8
Alternatives Analysis
and Memo

Alternatives Analysis

The Plans provided in attachments 5 and 6 detail the preferred alternative. This design was arrived at after extensive study of alternative locations and layouts for the pier over multiple years time. Alternatives considered in developing the proposed project are briefly described below.

2008-2010 Pier Feasibility Study

In 2008-2010, UNE completed a concept planning study for the proposed pier. In this study, nine alternative designs were developed for water access facilities along the UNE waterfront consisting of various configurations of piers, boat ramps, and upland access and support facilities. The alternatives were evaluated on a range of criteria including technical criteria, functionality, constructability, regulatory impacts, cost of construction, and others to identify a preferred facility location. The nine alternatives evaluated through this study are shown in the figure below. At the conclusion of this study, Site 7 (directly in front of the Marine Science Center building) was identified as the preferred facility location to develop a new pier facility that would consist of a pile-supported pier extending from shore out into the Saco River. This location is optimal for access to and from the MSC facility and on the water, and allows for all-tide berthing with a smaller structure and less impact than several adjacent alternatives that were considered. At the conclusion of this study it was determined that Site 7 was the preferred alternative to move forward with further planning and design.

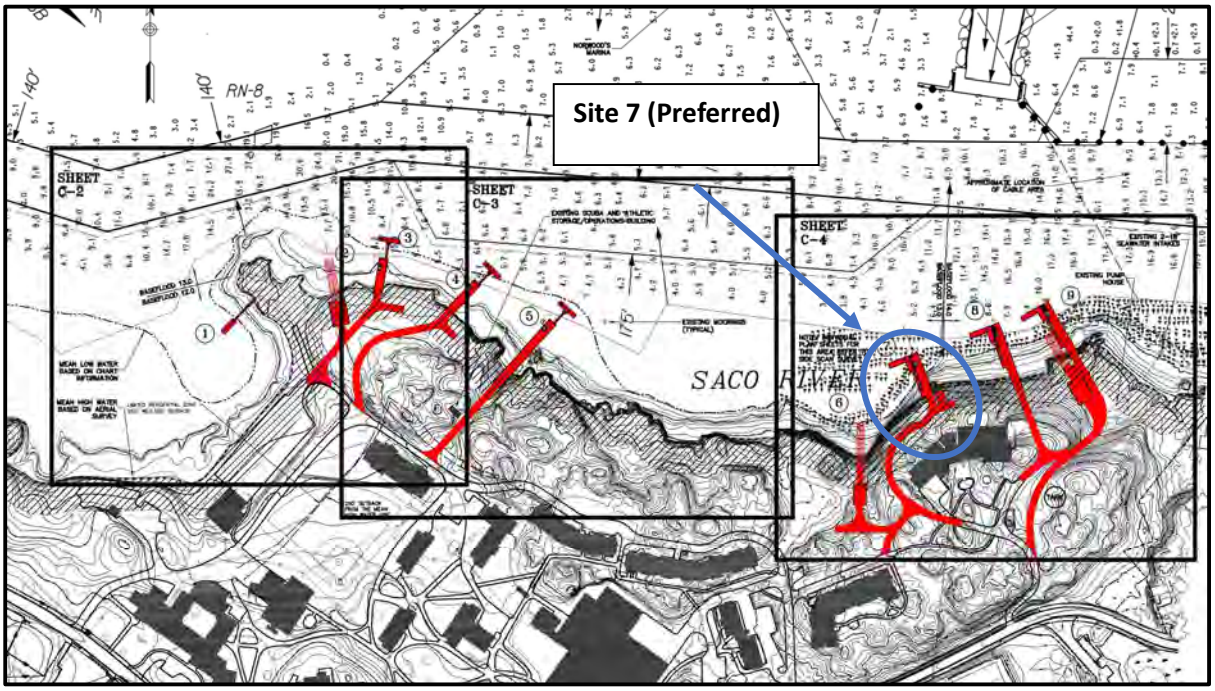

2015-2016 Pier Layout Study

After completion of the pier feasibility study described above, UNE undertook additional effort to study alternative pier layouts that would address the functional needs of the facility as well as the site exposure, berthing conditions, access requirements, and associated site impacts. During this study, numerous alternative pier layouts were considered which are depicted in the two figures that follow.

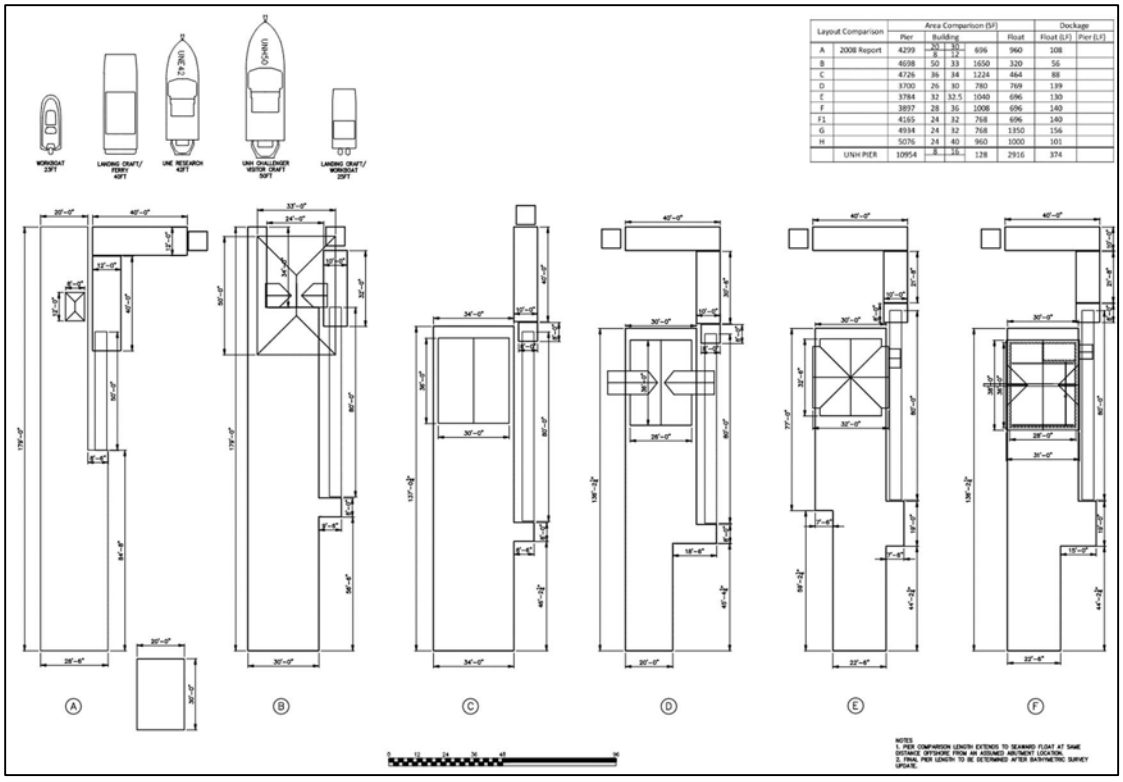

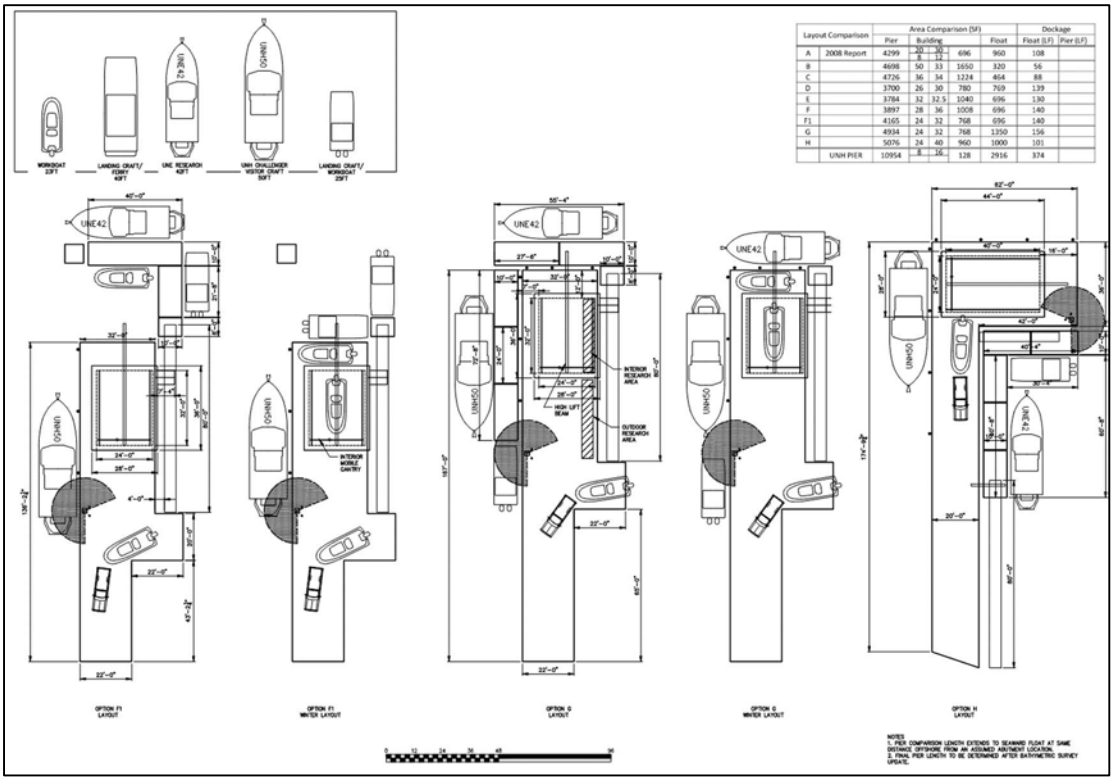

Further alternative development was completed in 2016 to address a realignment of the pier head parallel to the predominant direction of flow in the River for improved berth functionality. These alternatives considered input of the Biddeford Harbormaster and his knowledge of boating and

conditions on the Saco River after review of earlier layouts during a meeting in early 2016. The figure below depicts three alternatives considered during the study.

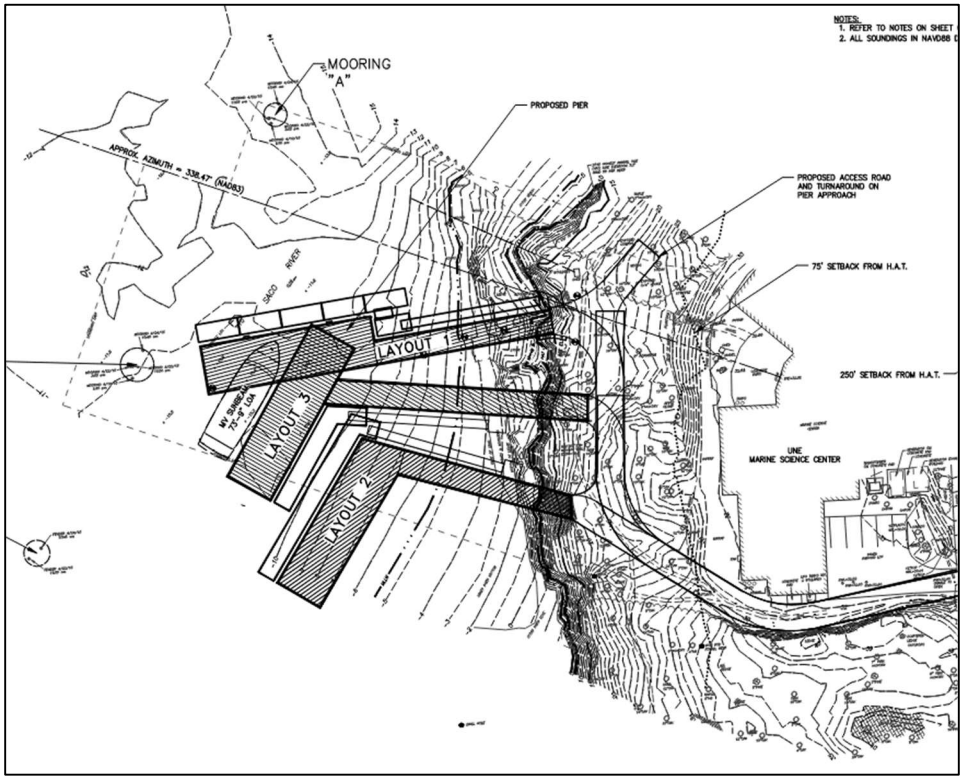

2023 Layout Refinement

During design refinement undertaken in 2023, the preferred alternative was identified as a combination of the pier approach from Layout 1, and the pier head from Layout 3, of the 2016 layout study. The Layout 1 pier approach represents the least impactful and most feasible option for upland site access. The Layout 3 pier head provides more desirable berthing conditions by aligning the main berth with flow directions in the River, and reaches sufficient depth to provide all-tide access for the range of vessels anticipated to use the facility. The layout was then refined somewhat to reduce the size of the structure to keep the dimensions to the minimum necessary to accomplish the functional goals of the project. During this refinement, the dimensions of the pier head were reduced from the initially proposed 28-feet wide by 100-feet long, to the currently proposed 23-feet 4 inches wide by 80-feet long. The dimensions of the float dock system were reduced somewhat, and the layout of fender piles was refined to reflect a functional design with minimum necessary dimensions and impacts.

The preferred alternative as currently presented represents a facility of the smallest dimensions possible to provide a functional facility that provides all-tide access for the range of vessels anticipated to use the facility, and ADA compliant access to the floating dock and gangway system and berthed vessels. While it could be possible to further reduce site impacts by further reducing the dimensions of the facility, any reduction beyond the size that is currently proposed would impact the proposed uses of the facility.

Do Nothing Alternative

A Do Nothing Alternative is the least impactful option, but would fail to address the goal of providing all-tide access to support UNE's marine research and educational programming through the marine science center. The existing seasonal floats and gangway located on the UNE campus upstream of the MSC building do not effectively meet these needs. Therefore, a Do Nothing alternative is not considered to be a feasible long-term solution.

Memo

To:	Andrew Philippe, Director of Campus Planning
From:	Daniel Bannon, P.E., CFM and Barney Baker, P.E.
c:	UNE – Alan Thibeault Site Design Associates – Tom Saucier, P.E. GEI Consultants, Inc. - John Gareau, E.I.
Date:	November 28, 2023
Re:	Proposed GMSC Pier Location University of New England, Girard Marine Science Center Pier Biddeford, Maine GEI Project No. 2203703

Summary and Purpose

The University of New England (UNE) proposes to construct a new pier on the Saco River adjacent to the Girard Marine Science Center (GMSC) to support research and educational programming. The project has been in development for more than 10 years and has gone through extensive planning and alternatives analysis in arriving at the design that is proposed. In October 2023, UNE staff held a meeting with several key stakeholders including the Biddeford and Saco Harbormasters, who raised questions as to the viability of relocating the pier further toward the east, downstream from the proposed location, in a revised alignment. The purpose of this memo is to summarize the process that has been undertaken for selecting the proposed pier location and to evaluate the advantages or disadvantages of the suggested alternative location compared to the proposed design.

Planning History

UNE has undertaken multiple studies to investigate locations and configurations for the proposed GMSC pier. These studies considered factors and constraints including but not limited to proximity to campus facilities, available water depths, site exposure to currents and wave action, upland site impacts, coastal wetland and habitat impacts, impacts to harbor uses such as fishing, recreational boating, and moorings, and estimated cost of construction. The proposed pier represents the preferred balance of these factors. The past studies that resulted in this design are briefly summarized below.

In 2008-2010, UNE completed a concept planning study to investigate opportunities for construction of improved water access to support marine science programs on campus. In this study, nine alternative design concepts were developed along the UNE waterfront consisting of various configurations of piers, boat ramps, and upland access and support facilities. The concept alternatives are shown in Fig. 1. The alternatives were evaluated on a range of criteria including technical criteria, functionality, constructability, regulatory impacts, costs of construction, and others to identify a preferred facility location. At the conclusion of this study, Site 7 (directly in front of the GMSC building) was identified as the preferred location to develop a new pier facility that would consist of a pile-supported pier extending from shore out into the Saco River. This location was determined to provide the best balance of site constraints and desired functions with good access from the GMSC, ability to achieve adequate water depths to allow for all-tide berthing of the anticipated vessels, and a location of river frontage semi-sheltered from currents and wave action.

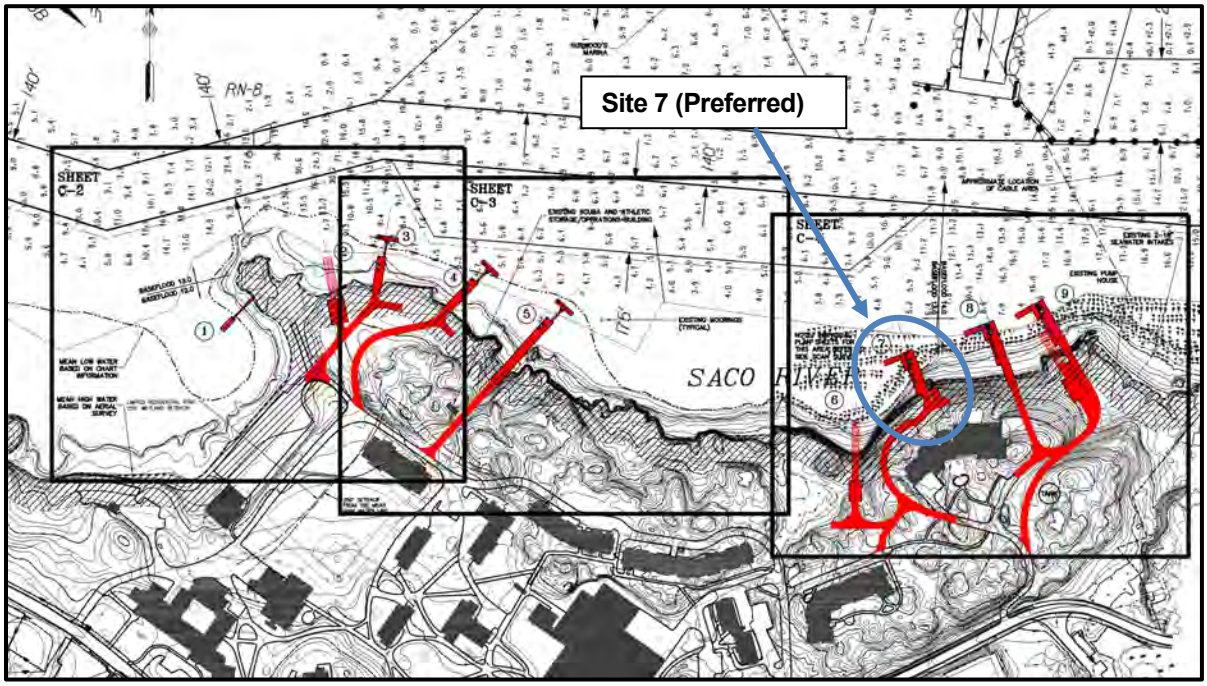

Fig. 1 – Alternative Sites Evaluated in 2008-2010 Study

After completing the pier feasibility study and identifying Site 7 as the preferred pier location, UNE undertook additional effort in 2015-2016 to study alternative pier layouts that would address the functional and vessel needs of the marine science curriculum as well as the site exposure, berthing conditions, access requirements, and associated site impacts. During this work, numerous alternative pier layouts were considered. Figs. 2 and 3 demonstrate some of the alternative layouts that were considered. This process allowed for consideration of desired pier dimensions and features, configurations of fixed structures and floating docks, pedestrian access needs, and other design criteria.

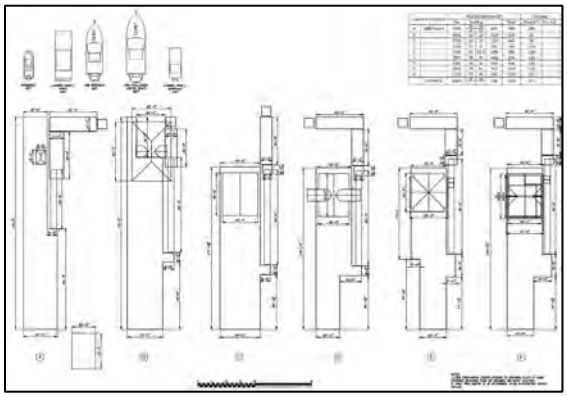

Fig. 2 – Sample of pier layout alternatives evaluated in 2015-2016 (1 of 2)

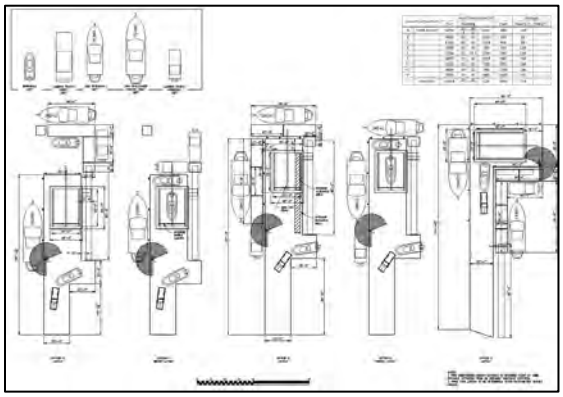

Fig. 3 – Sample of pier layout alternatives evaluated in 2015-2016 (2 of 2)

In February 2016, the proposed pier was reviewed with the with the Biddeford City Manager and key city representatives that included the Biddeford Harbormaster and Assistant Harbormaster and representatives from development staff and the Saco River Corridor Commission. Further input was gathered on river currents, recreational boating, and fishing activities resulting in the development of the three layout alternatives shown in Fig. 4 (labeled as Layout 1, Layout 2, and Layout 3). The

Harbormasters suggested that a layout with pier head oriented along the predominant direction of current such as shown in Layouts 2 and 3 would be preferable for vessels berthed at the facility. The Harbormasters also suggested that locating the pier closer to shore to minimize impacts to existing moorings and fishing activities would be preferable. These suggestions were taken into account in the next stages of design. A summary of the pier layout alternatives considered is provided in the attached memo from Baker Design Consultants dated March 22, 2016 titled "Consideration of an Alternate Pier Configuration as recommended by the City of Biddeford".

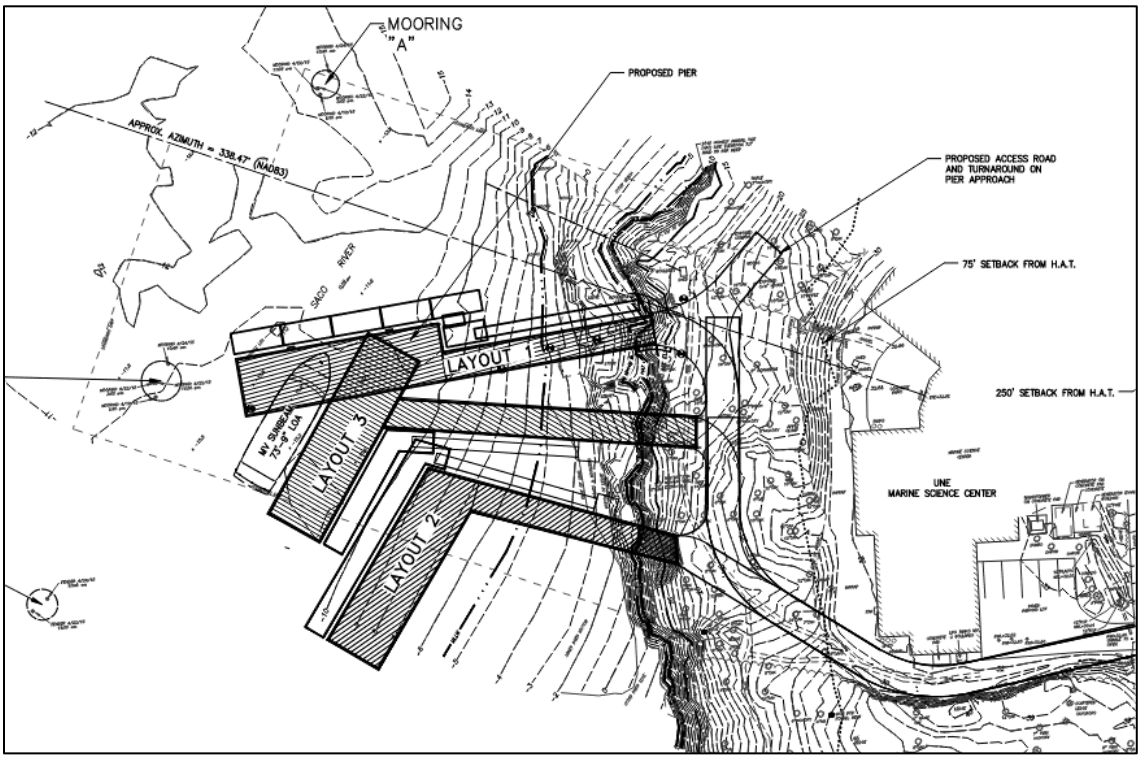

Fig. 4 – Pier layout alternatives developed in 2016 to address Harbormaster feedback

Final Design

In 2022, UNE resumed formal design development for the proposed GMSC Pier. At the start of this process, a layout was developed based on the 2016 layouts shown in Fig. 4 that reflected a combination of the pier head from Layout 3 and the pier approach from Layout 1. This new layout represented the optimal balance of site and functional constraints and upland access, with a pier head orientation that provides a main berth that is aligned with flow directions in the river, and sufficient depth to provide all-tide access for the range of vessels anticipated to use the facility.

The pier dimensions were refined through the design process to keep the structure to the minimum dimensions necessary to achieve the intended functions. This process resulted in a 22% reduction in footprint of the fixed pier, a 47% reduction in the footprint of floating docks, and a 17% reduction in the quantity of piles. Design development was advanced to 75% complete based on this design. The 75% design layout is shown in Figs. 5 and 6.



Fig. 5 – Proposed Pier Layout Vicinity Plan

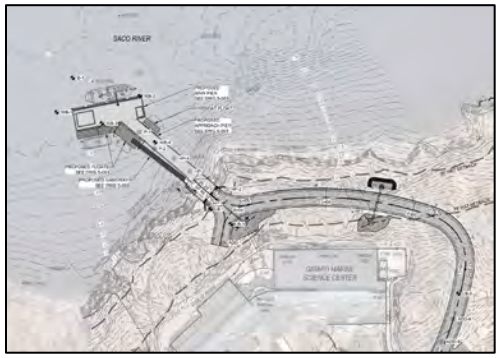

Fig. 6 – Proposed Pier Layout Site Plan

Alternative Location Analysis

In October 2023, UNE staff held a meeting to review the project with several key local stakeholders. During this meeting, the Biddeford and Saco Harbormasters suggested an alternative concept for the pier location that would relocate the pier further downstream from the proposed location as approximately shown in Fig. 7. In support of this alternative location, the Harbormasters cite deeper water, less impact to existing moorings, a location with more favorable water currents, and concerns of sediment deposition and potential need for dredging in the proposed pier location. Additionally, the Harbormasters have raised concerns about potential ice exposure given the history of icing issues at the Camp Ellis Pier directly across the River.

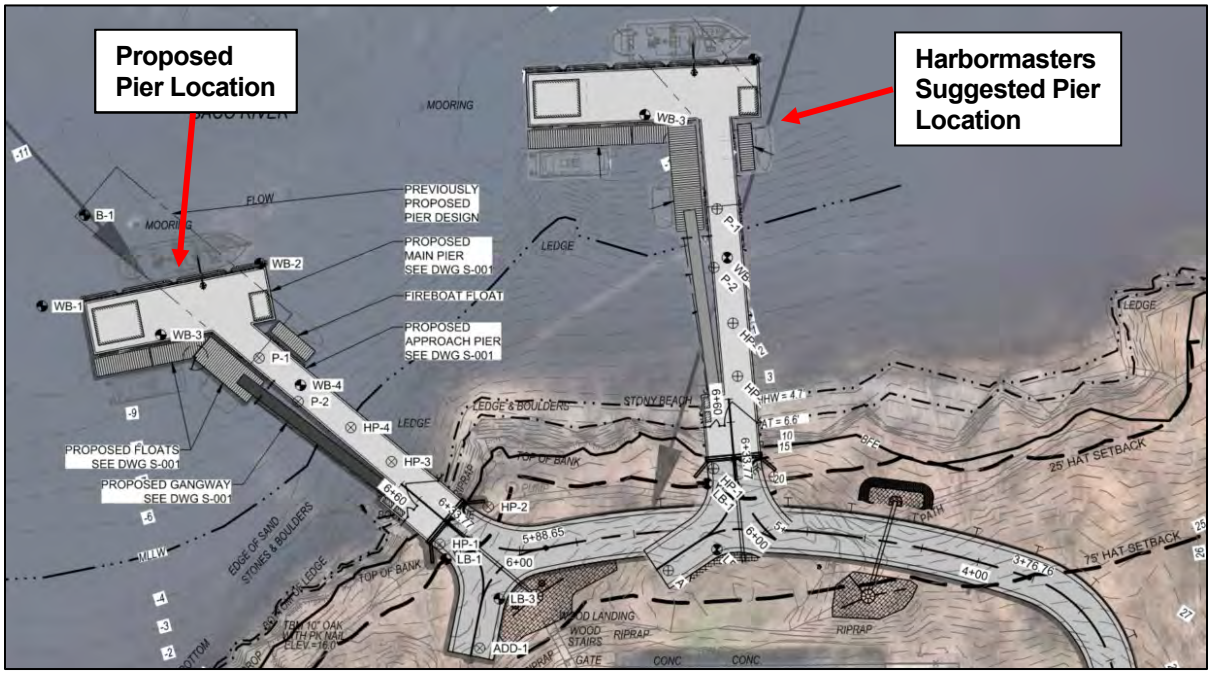

Fig. 7 – Alternative Suggested Pier Location

Review of Suggested Alternative Location

GEI has reviewed the suggested alternative layout and provided an evaluation of factors relating to the advantages and disadvantages of the proposed design versus the suggested alternative.

Water Depth

One reason for suggesting the alternative pier location is greater available water depths.

In the proposed design there is 5 to 6 feet of depth at mean lower low water (MLLW) at the main berth on the outer face of the pier which is sufficient for the proposed vessels using the facility. The suggested alternative location does have greater depth at the main berth, approximately 11 to 12 feet at MLLW. While this additional depth could allow larger vessels to use the pier, it is not needed to support the currently proposed and/or future envisioned uses.

The proposed design has 3.5 to 5 feet of depth at MLLW at the proposed floats on the inside of the pier, with sufficient distance to the MLLW line and a generally soft substrate near the floats to minimize risk of damage from vessels grounding out. In the suggested alternate location, the subtidal bottom slopes up rapidly behind the pier head. The available depth at the floats varies from 2 to 12 feet at MLLW, however the floats are in close proximity to a shallow ledge outcrop and there are concerns of hazardous conditions for vessels accessing these floats. In order to provide safe navigation to the floats the pier would need to be moved further downstream and/or extended further out into the River adding to its size, footprint, and cost.

From the standpoint of required water depths and navigational safety, the proposed design is preferred.

Exposure to Currents

The Saco River experiences currents due to tidal influence and riverine flows. To understand currents on the River, GEI has reviewed data gathered by the US Army Corps of Engineers as part of their study of erosion at Camp Ellis[1]. Figs. 8 through 11 demonstrate trends in current through differing stages of the tide. The magnitude of the current's velocity is represented by the length of the yellow arrows, with a reference arrow of 50 cm/s provided in the figures, while the current direction is indicated by the direction of the arrow. As can be seen from this data, the proposed pier location benefits from the natural shape of the shoreline which generally results in lower current velocities at the proposed location than at the downstream constriction of the River where the suggested alternate location would be located.

The lower current velocities at the proposed pier location compared to the suggested alternate result in more favorable conditions for vessels berthing at the pier, greater safety for vessels and users, and reduced structural loading on the pier. For these reasons, the proposed pier location is preferred from the standpoint of exposure to currents.

[1] Saco River and Camp Ellis Beach Section 111 Shore Damage Mitigation Study, Appendix C – Data Collection and Modeling Report, prepared by Woods Hole Group and Aubrey Consulting for the US Army Corps of Engineers, October 2006

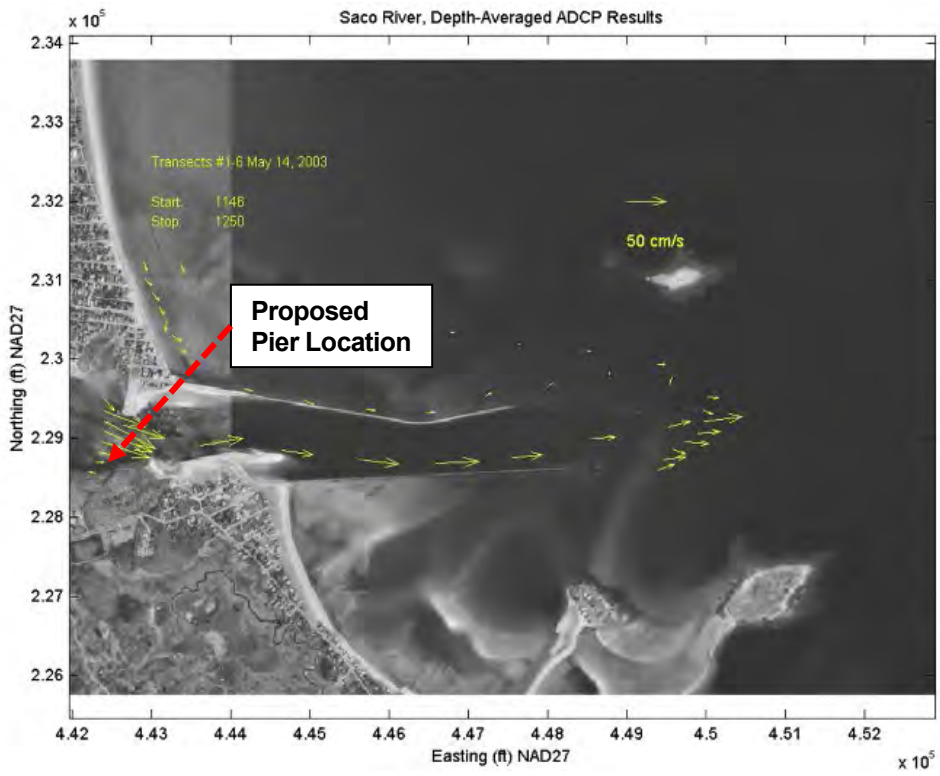

Fig. 8 – Sample of USACE Current Monitoring Data

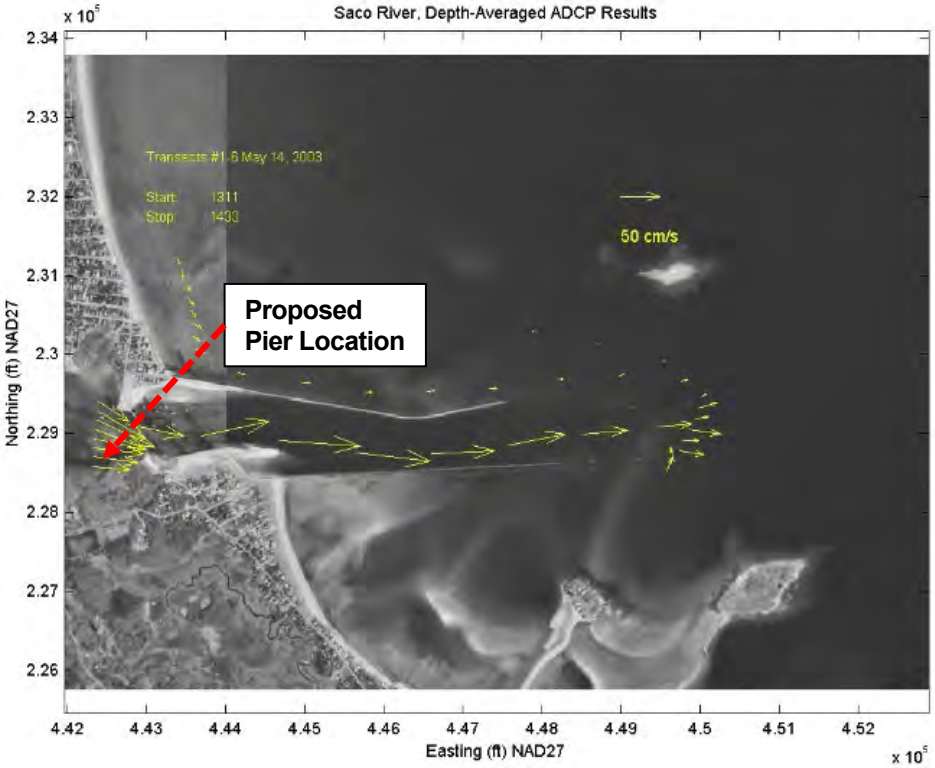

Fig. 9 – Sample of USACE Current Monitoring Data

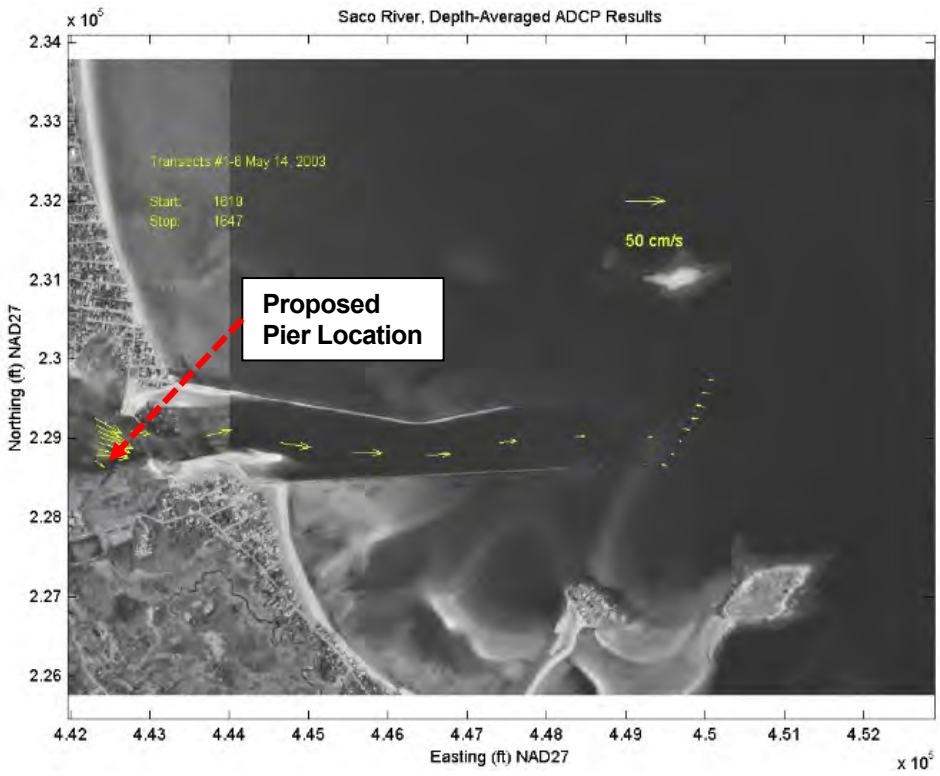

Fig. 10 – Sample of USACE Current Monitoring Data

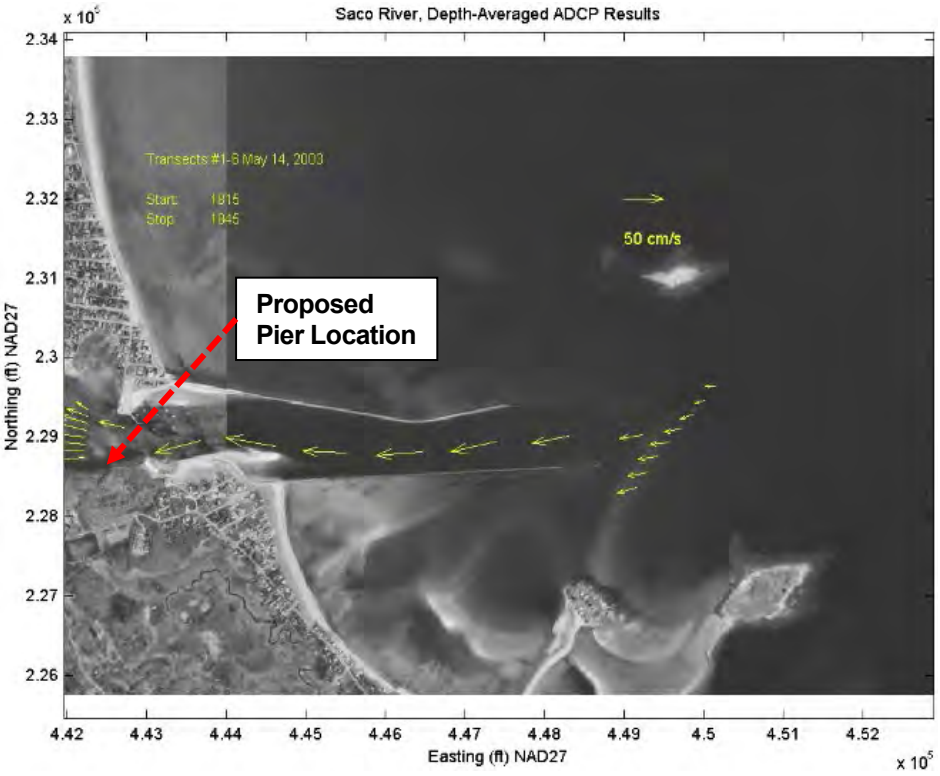

Fig. 11 – Sample of USACE Current Monitoring Data

Location Relative to River Sediment Deposition

The Harbormasters commented during the October 2023 meeting that the proposed pier location may be subject to sediment deposition that may impact pier navigation over time and require dredging in the future to restore water depths. As part of the project development, bathymetric surveys were completed in the pier area in May 2015 and again in November 2022. Fig. 9 provides an overlay of these two surveys (2022 contours are shown blue, 2015 contours are shown grey and red). In comparing these two surveys, there is negligible difference between the surveys that were taken 7.5 years apart. While there are minor differences that can be observed in contour locations and shapes, these could be attributed to the bathymetric survey accuracy and method of modeling the three-dimension surfaces used to create the contours. None of the differences are significant enough to suggest that there are large scale trends of deposition in the project area. Based upon this review, there is no indication that sediment deposition will be a substantial concern in the proposed area of the pier, and it does not appear that the suggested alternate pier location offers an advantage.

The proposed pier location does not appear to be in an area that is subject to notable sediment deposition and remains the preferred location.

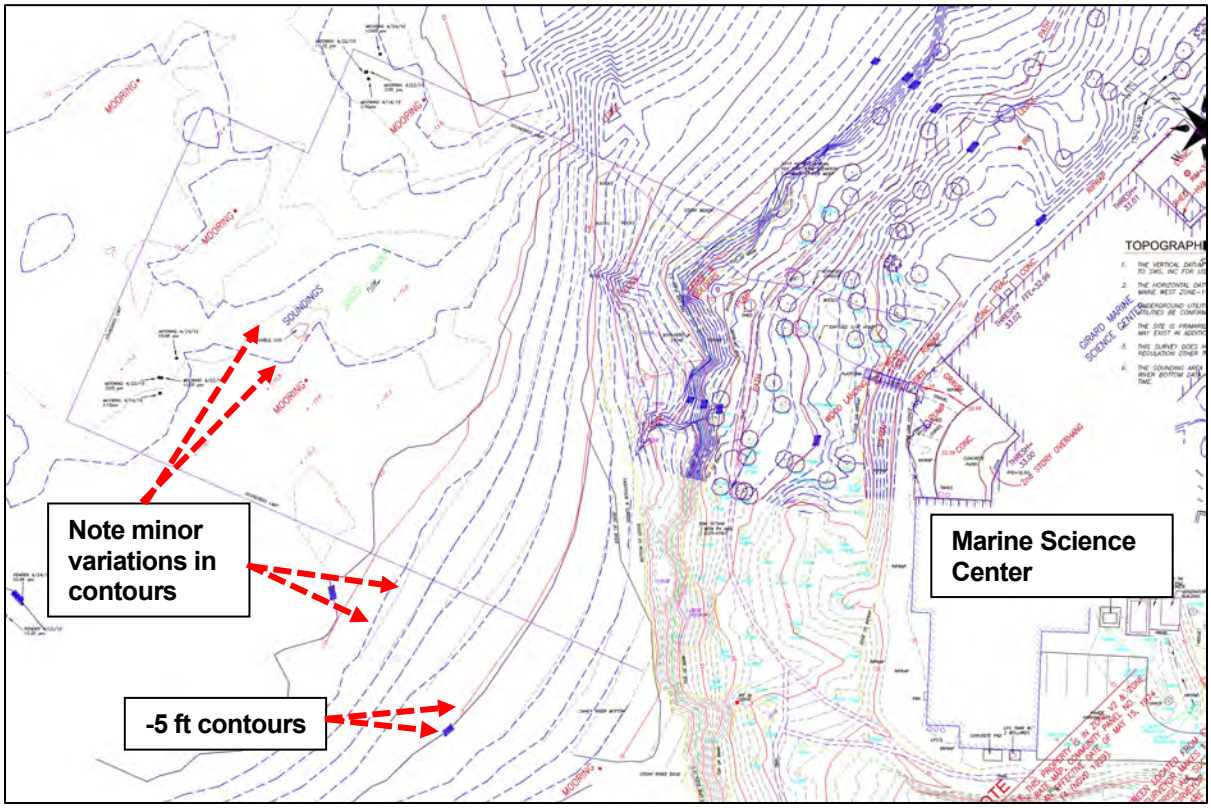

Fig. 12 – Comparison of 2022 (blue) and 2015 (grey and red) bathymetric contours

Exposure to Icing

The Harbormasters have raised concerns about exposure of the pier to winter icing. Icing on the Saco River is also a concern of UNE and the design team. The River is known to experience ice floes during the winter season that have historically been damaging to vessels at Camp Ellis. In terms of designing the fixed pier structure, the exposure to ice loading has been considered and the pile

supported pier structure will be able to sustain the forces from ice. The primary concern of the design team with winter icing is related to the impact on floating docks and berthed vessels. The ability to keep the facility in operation throughout the winter months when exposed to icing is still being evaluated by UNE. Additional steps are planned to monitor the site through winter conditions to better understand the extent of icing and potential impacts. The results of this investigation will inform the facility operations and vessel berthing plans. Methods being considered to mitigate the risks of ice impact to floats and vessels may involve the installation of additional temporary or permanent protective measures and/or limiting use of the pier during times when icing is anticipated. Irrespective of the ice protection and operational measures that may ultimately be included, the proposed pier location has less velocity exposure to icing than the suggested alternate location given its location and therefore reduced exposure. For this reason, the proposed design is preferred.

GEI has designed the fixed pier structure to resist the impact associated with river icing. Irrespective of pier location, the UNE will need to plan facility operation during periods of icing to manage risk associated with reduced facility use.

Impact to Moorings

The proposed pier layout is in close proximity to one existing known mooring which will likely need to be relocated to allow for the proposed construction. The suggested alternative is also in close proximity to one existing known mooring which would also need to be relocated if this alternative was used. Therefore, from the standpoint of mooring impacts, the proposed design and the alternative are believed to be similar.

To address anticipated impacts to moorings, GEI and UNE are prepared to work with City staff as necessary to allow for mooring adjustments to accommodate the proposed pier.

Conclusions and Closing

GEI has reviewed the concerns raised by the Saco and Biddeford Harbormasters and evaluated their impact on the proposed design, reviewed the history of planning that led to the current design location and layout, and reviewed the potential advantages and disadvantages offered by the suggested alternative pier location. While we respectfully value the input and suggestions for a layout alternative, it is our opinion that the proposed design represents the preferred balance of project requirements and site constraints. Compared to the suggested alternative, the proposed design achieves adequate water depth, provides safe navigation, results in a structure of smaller overall dimensions with less coastal wetland impact, does not appear to be subject to significant sediment deposition, and locates the pier in a location that is less exposed to current and icing impacts. For these reasons, GEI recommends that the current design and pier location be maintained.

We would be happy to discuss any elements of this memo at your convenience. Please contact Dan Bannon (dbannon@geiconsultants.com) or Barney Baker (bbaker@geiconsultants.com) with any questions.

Attachment
DJB:BJB:bdp
\\geiconsultants.com\data\Data_Storage\Working\UNIVERSITY OF NEW ENGLAND\2203703 UNE Marine Science Center Pier\11_SUBMISSIONS\2023-11-29 -Revised Memo on Suggested Alternative Location of Pier\UNE MSC Pier - MEMO_Alternative Pier Location_2023-11-28.docx

Attachment 1

2016 Pier Alternatives Memo

BAKER DESIGN CONSULTANTS
Civil, Marine and Structural Engineering

Project: **15-07 UNE Pier Layout Alternatives**

Date: March 22, 2016

To: Alan Thibeault; University of New England

Copy: Tom Saucier; Site Design Associates
Dan Bannon; Baker Design Consultants,

Subject: Consideration of an Alternate Pier Configuration as recommended by the City of Biddeford

\\BDC-SRV\PROJECTS\15\15-07 UNE MSC WATERFRONT\DESIGN\ALTERNATE PIER LOCATION STUDY\15-07 UNE PIER ALTERNATIVES MEMO MARCH 2016.DOCX

MEMO

Introduction

Baker Design Consultants (BDC) completed a pier feasibility study in 2010 study for the University. The work first defined the type of pier and parameters necessary to support the Marine Science program and then looked at the entire Saco River shoreline of the Biddeford Campus for suitable sites. Concept pier layouts for nine (9) sites were prepared and then compared in a matrix format that looked at the ability of the pier to meet the program objectives, the respective shore and waterside development challenges, the environmental impacts associated with each solution and the approximate cost and scope for construction. The pier was added to the long-term facility plan for the University.

In September 2015, BDC was retained to develop the design for a new pier at the site that had been most favorably rated in the 2010 study. Site No. 7 met the operational objectives for the pier and was located close to the Marine Science Facility pier with access to deep-water. The design has advanced through several stages of UNE MSC faculty review to define an optimum footprint and access for the pier. This was followed by site survey and geotechnical borings to verify water depths and subsurface conditions at the proposed pier location. Initial contact with the regulatory agencies has been made, but no permits applications have been filed to date. The Biddeford Harbormasters were invited to the site to review the pending (now complete) geotechnical exploration and the pier was discussed briefly at this meeting.

In February, Barney Baker and Alan Thibeault met with the City Manager and key city representatives that included the Harbormasters and representatives from development staff and the Saco River Corridor Commission. Preliminary plans for the pier were reviewed and discussed with an opportunity for staff to share comments on the proposed design. The Harbormasters were particularly keen advocates for design adjustments based on their knowledge and experience with the Harbor. All City staff was supportive of the pier and recognized the benefits it will provide to the Marine Science program at UNE.

This memo considers comments made by City staff on the current design and considers two Alternate Layouts to evaluate the changes requested. Refer to the appended drawings that show the three (3) Layouts discussed in this memo. Sheet C-1 shows the pier site in the relation to other features in the Saco River Basin.

Sheet C-1 - Saco River Basin
Sheet 1 of 4- Layout 1- Current Design
Sheet 2 of 4- Layout 2- Incorporating all City Recommendations
Sheet 3 of 4- Layout 3- Modification proposed by BDC
Sheet 4 of 4- Composite showing all 3 Layouts

Recommendations for Pier changes made by the City.

The City suggested changes to the proposed pier (Layout 1) at the February 2016 review meeting are outlined below with comments from Baker Design Consultants (BDC Response). These collectively advocate for the pier to be relocated inshore, upstream and realigned to be more parallel with the shore.

Alternate Pier configurations (Layout 2 and Layout 3) are appended. These were prepared to investigate and illustrate the changes that would be necessary to incorporate the recommended pier changes. The Table on page 4 provides a summary comparison of the proposed design (Layout 1) with the Alternate Layouts.

1. Place the pier closer to shore to minimize existing moorings impacts.

The Harbormasters were concerned that the proposed pier (Layout 1) impacted the location of several moorings and that this would create specific hardship for individual mooring holders and harbor management in general. The Harbor masters made general reference to several mooring holders, but did not have access to a plan to show where these were located.

BDC Response. Both Alternate Layouts (2 & 3) move the pier closer towards shore. Refer to tabulated mooring clearances in the Table that follows for each Layout considered.

The moorings in the pier area at the time of the April 2015 survey were put on the plan and a general search was made of google earth aerial photographs going back several years for others that might not have been in the water at the time of the field survey.

The three recorded moorings nearest the pier site are identified on the attached plans as Mooring "A", "B", and "C". For each of the pier layout alternates considered, the distance from the approximate mooring center point to the nearest point on the pier is tabulated. A clear distance in excess of 110 to 120-ft is considered an acceptable mooring clearance to the pier

2. Consider pier impacts to nearshore fishing.

The Harbormasters indicated the nearshore at the pier location was used by fishermen that use small boats to fish along the southern shore of the river from upstream to downstream. The proposed pier would require boaters to move out and around the pier and may be perceived as a barrier to the fishing activity. It was pointed out that any new pier at any waterfront location will have a similar impact on near shore navigation, but moving the pier inshore would reduce the necessary detour.

BDC Response: It is acknowledged that while the pier would influence nearshore navigation, it was well clear of the designated federal channel and boats moving around the pier would not conflict with channel traffic. The nearshore fisherman in small boats could pass under the approach section of the pier at all states of the tide in Layout No. 3 but would be restricted at low water by floats and gangway in Layouts 1 & 2.

3. Relocate pier further upstream and change orientation to reduce current exposure.

The Harbormasters confirmed that the channel restriction located just seaward of the pier created fast currents that ran parallel to shore. Based on their knowledge of the harbor, they suggested the pier would be better rotated upstream parallel to the current and moved upstream and inshore from the Layout 1 location. This would put the pier in water with less tidal current and make docking easier and safer.

BDC Response. BDC indicated they had studied a 2006 study by the Army Corps of Engineers of currents at the pier location and had already oriented the pier upstream and away from the highest tidal currents while maintaining deep water access to both sides of the pier. It is recognized that moving the pier upstream reduces the current exposure, but because the water shoals, the vessel berthing is less efficient. BDC feels strongly that dredging is a last resort because of high cost, unreliable timeframes for periodic maintenance.

Alternate Layouts 2 & 3 benefit from the local knowledge and recommendation of the Harbormasters by effectively placing the pier in calmer water with an improved docking angle to the current. However, in both alternate configurations there is a decrease in the pier face docking provided by the pier. Layout 3 also would require dredging to maintain float access. Refer to the attributes for each Layout in the Table that follows.

4. Reduce length of pier access road to reduce visual impact on shore.

This comment was made in consideration of tree cutting, vegetation removal, and regrading that would be necessary to create an access road to the pier. The road access is located within the 250' Shoreland Zone. The visual impact will be carefully reviewed by the Saco River Corridor Commission. It was suggested that the access road length to the pier could be reduced by relocating the pier upstream from the current Layout 1 location.

BDC Response. Preliminary road alignment and profiles are provided for each layout in the appended drawings and compared in the Table on page 4. In each case, the access road extends around the existing Marine Science Center building to provide equipment and vehicle access to the pier. At the pier abutment it is necessary to provide a vehicle turnaround. Options that locate the pier approach further upstream require a sloped pier approach connector in order to accommodate the steeper grades at the shore This undesirable feature is alleviated by providing a turn-around space on the Pierhead.

Alternatives Study Results summary

In summarizing the results of this Alternatives Study, the following points can be made.

- The local knowledge and insight provided by the City is both timely and helpful. The input provided both validates the Layout 1 design development to date and creates the opportunity to make small design improvements to reduce the tidal current exposure at the pier.
- Layout 2 does not work because of the steep shoreside access and the need to consider dredging in order to effectively use both sides of the pier.
- Layout 3 benefits from inside docking of small vessels, reduces access road impacts on shore with minimal concessions in water depth. However, the footprint of the pier (and cost) is increased and it is necessary to slope the connector pier to make the shore transition work. While the geotechnical fieldwork connected to date would be useful, additional geotechnical work is needed to verify subsurface conditions.

Moving forward, we recommend that Layout 3 be considered by UNE staff as a viable alternative for consensus approval with City stakeholders in advance of further design and regulatory discussion.

Please contact me with any questions.

Barney Baker, PE
Principal
JN 15-07

Table 1 – Pier Layout Alternatives Comparison

This Table below compares the proposed pier design (Layout 1) with two alternative layouts (Layouts 2 and 3) that were developed with consideration of City recommendations and key criteria that relate to size and type of impacts, facility safety and functionality that were used in the original site analysis.

	LAYOUT 1 Proposed Design	**LAYOUT 2 Alternate**	**LAYOUT 3 Alternate**
Outer face of Pier, Distance from HAT	193'	110'	152'
Orientation of Berth	40 DEG WNW	10 DEG WSW	11 DEG WSW
Setback to nearest mooring	A - 110' B - 37' C - 133'	A - 176' B - 120' C - 127'	A -121' B - 76' C - 117'
Impacted moorings	B	None	B
Setback to federal anchorage	147'	248'	204'
Water Depth Available at MLLW (no dredging)	Downstream Face – 6' Upstream Face – 5.5'	Seaward Face – 4.5' Landward Face – 1'	Seaward Face – 5.5' Landward Face – 5'
Berthing Available	Downstream Face – 100' Upstream Face – 100'	Seaward Face – 104' Landward Face* – 84' **Dredging Required*	Seaward Face – 110' Landward Face – 57'
Length of pier approach connector	100'	102'	147'
Slope of Pier Approach	No slope	1V:20H	1V:25H
Length of access road	390'	295'	330'
Access Road Gradient	*200' @ 2%* *150' @ 10%* *40' @ 0%*	*200' @ 2%* *95' @ 10%*	*200' @ 2%* *110' @ 10%* *20' @ 0%*
Length of pedestrian route from MSC building to Pier	120'	230'	170'
***Dredging Required**	No	*Yes	No
Berthed vessel alignment to currents	~40 deg	Parallel	Parallel
Pier Area	Approach – 1,400 SF Pier Head – 2,800 SF Total – 4,200 SF	Approach – 1,300 SF Pier Head – 2,800 SF Total – 4,100 SF	Approach – 2,100 SF Pier Head – 2,800 SF Total – 4,900 SF
Pier Support Conditions	Pier approach supported on shallow ledge, ability to span across transition area and support pier head on deep piles.	Pier head and majority of piles may be located in transition area with challenging geotechnical conditions. Need to confirm with additional geotechnical information.	Pier head likely located beyond transition area where the majority of piles can be driven to ledge without socketing. Need to confirm with additional geotechnical information.
Availability of geotechnical information	Geotechnical program completed	Pier is located a significant distance from any borings/probes, additional subsurface investigation required	Pier is located near the original boring/probe locations, but subsurface information will need to be supplemented with additional data.

Appendix A – Concept Plans

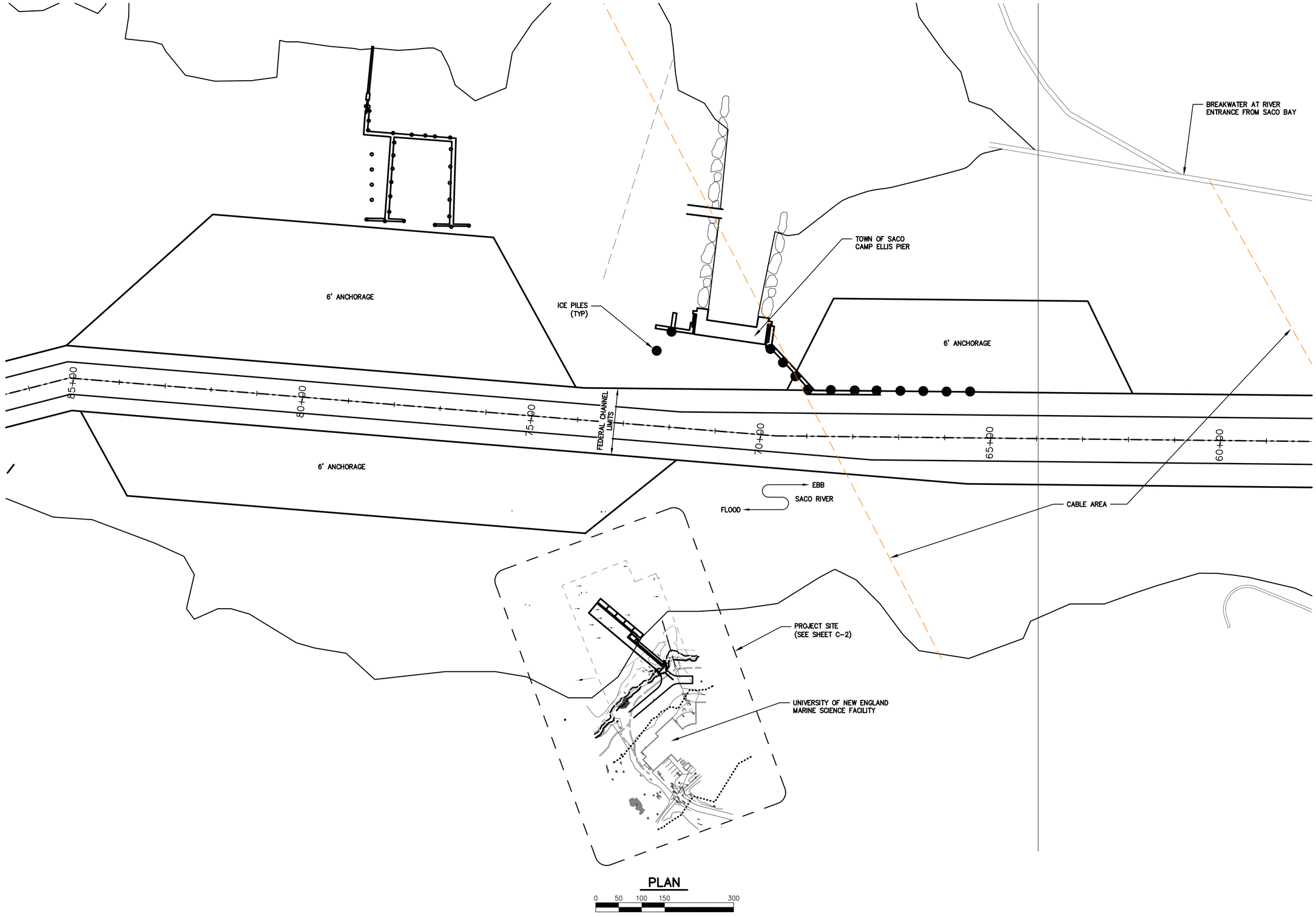

PLAN

0 50 100 150 300

N

BAKER DESIGN CONSULTANTS
Civil, Marine, and Structural Engineering
7 Spruce Road • Freeport • Maine • 04032 • 207-846-9724 • info@bakerdesignconsultants.com

NO.	PROGRESS REVIEW SUBMISSION	DATE	INT.
A		6-25-15	BJB

DESIGNED BY:
DRAWN BY: JJC
CHECKED BY: BJB
SCALE: AS SHOWN

SHEET TITLE: SACO RIVER BASIN

PROJECT: UNIVERSITY OF NEW ENGLAND
UNE MSC WATERFRONT
BIDDEFORD, MAINE

DATE
FEBRUARY 2015

CONTRACT NO.
15-07

SHEET NO. C-1

REV. A

\\bdc-srv\projects\15\15-07 une msc waterfront\cad\15-07 une msc waterfront civil3d (djb-nov-2015).dwg 1/25/2016

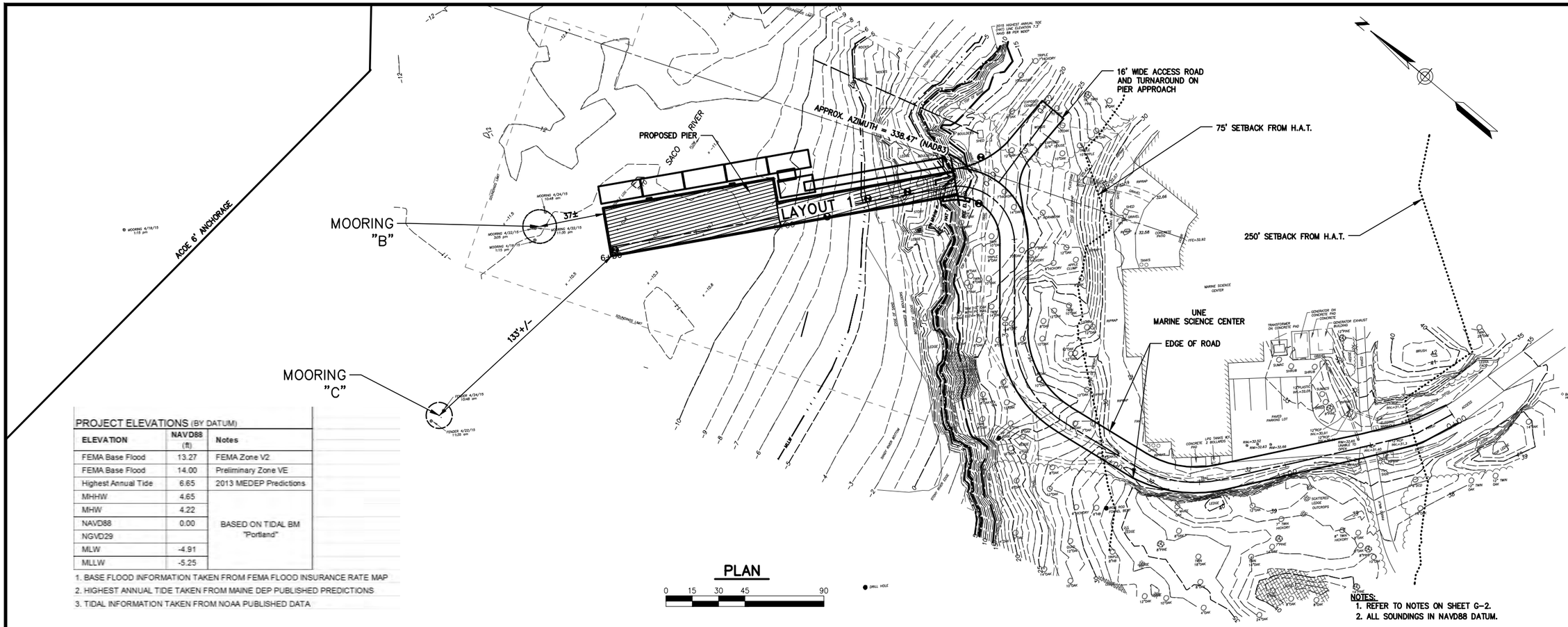

PLAN

0 15 30 45 90

PROJECT ELEVATIONS (BY DATUM)		
ELEVATION	NAVD88 (ft)	Notes
FEMA Base Flood	13.27	FEMA Zone V2
FEMA Base Flood	14.00	Preliminary Zone VE
Highest Annual Tide	6.65	2013 MEDEP Predictions
MHHW	4.65	BASED ON TIDAL BM "Portland"
MHW	4.22	
NAVD88	0.00	
NGVD29		
MLW	-4.91	
MLLW	-5.25	

1. BASE FLOOD INFORMATION TAKEN FROM FEMA FLOOD INSURANCE RATE MAP
2. HIGHEST ANNUAL TIDE TAKEN FROM MAINE DEP PUBLISHED PREDICTIONS
3. TIDAL INFORMATION TAKEN FROM NOAA PUBLISHED DATA

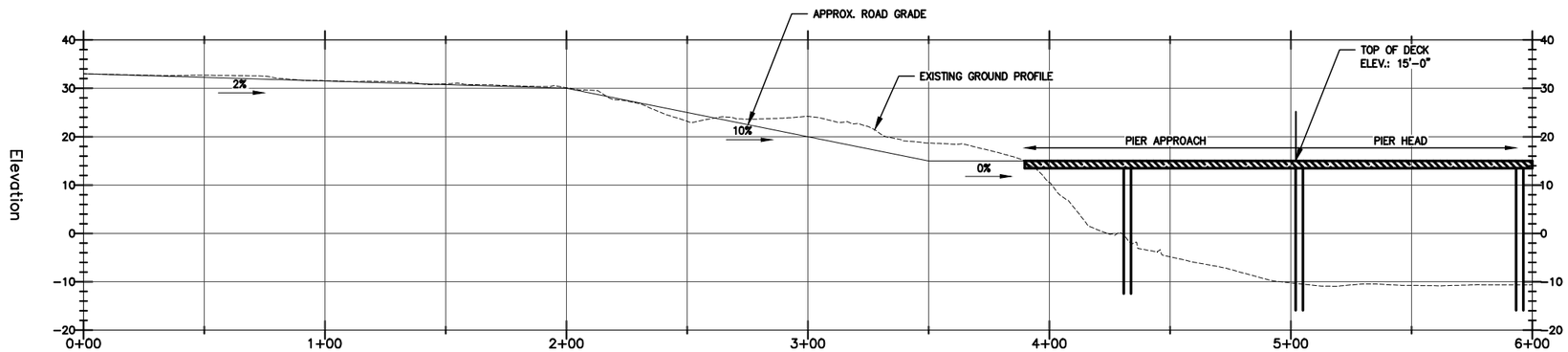

ACCESS ROAD PROFILE

0 15 30 45 90

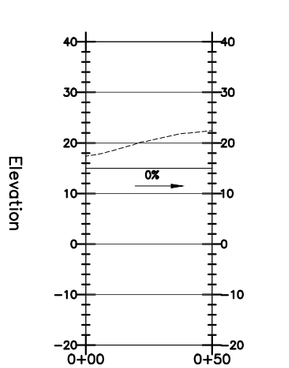

TURN AROUND PROFILE

0 15 30 45 90

BAKER DESIGN CONSULTANTS
Civil, Marine, and Structural Engineering
7 Spruce Road • Freeport • Maine • 04032 • 207-846-9724 • info@bakerdesignconsultants.com

NO.	DESCRIPTION	DATE	INT.
A	ALTERNATIVES MEMO SUBMISSION	3-15-16	BJB

STATE OF MAINE
BARNEY J. BAKER
No. 5737
LICENSED PROFESSIONAL ENGINEER

DESIGNED BY: DJB
DRAWN BY: KET
CHECKED BY: DJB
SCALE: AS SHOWN

SHEET TITLE: PIER LAYOUT 1 ACCESS ROAD PLAN AND PROFILE
PROJECT: UNIVERSITY OF NEW ENGLAND UNE MSC WATERFRONT BIDDEFORD, MAINE

DATE: MARCH 2016
CONTRACT NO.: 15-07
SHEET NO.: 1 OF 4
REV.: A

\\bdc-srv\projects\15\15-07 une msc waterfront\cad\15-07 une msc waterfront civil3d (alternate design review).dwg 3/22/2016

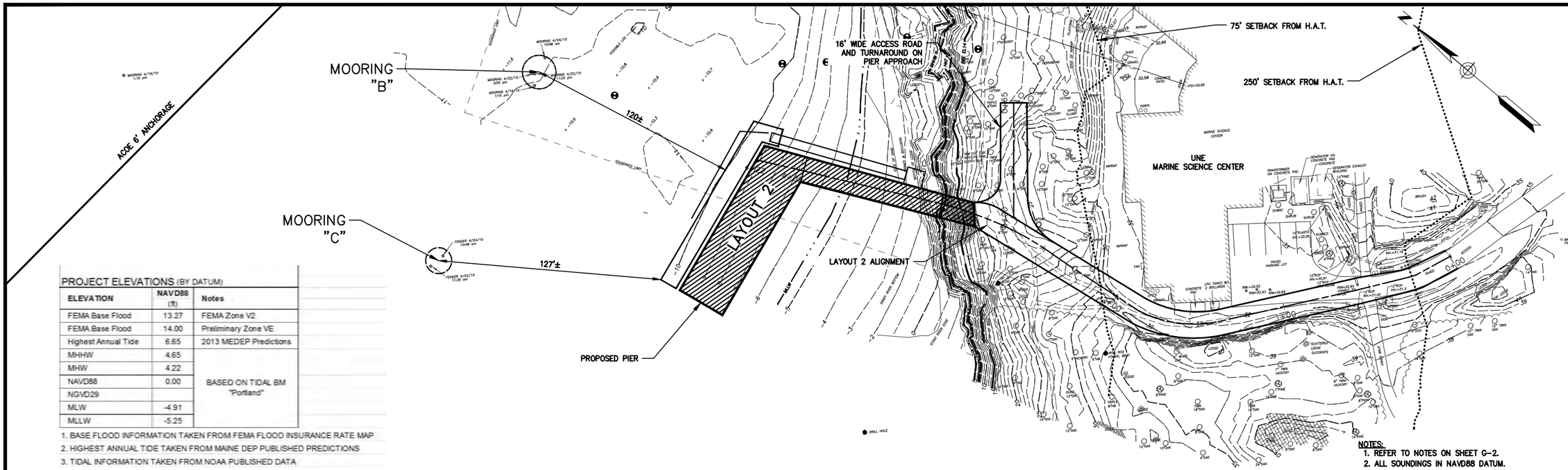

NOTES:
1. REFER TO NOTES ON SHEET G-2.
2. ALL SOUNDINGS IN NAVD88 DATUM.

PROJECT ELEVATIONS (BY DATUM)

ELEVATION	NAVD88 (ft)	Notes
FEMA Base Flood	13.27	FEMA Zone V2
FEMA Base Flood	14.00	Preliminary Zone VE
Highest Annual Tide	6.65	2013 MEDEP Predictions
MHHW	4.65	BASED ON TIDAL BM "Portland"
MHW	4.22	
NAVD88	0.00	
NGVD29		
MLW	-4.91	
MLLW	-5.25	

1. BASE FLOOD INFORMATION TAKEN FROM FEMA FLOOD INSURANCE RATE MAP
2. HIGHEST ANNUAL TIDE TAKEN FROM MAINE DEP PUBLISHED PREDICTIONS
3. TIDAL INFORMATION TAKEN FROM NOAA PUBLISHED DATA

PLAN

0 15 30 45 90

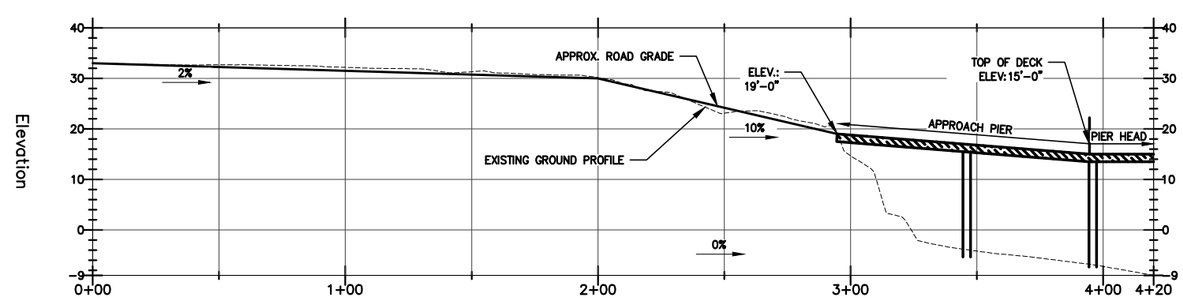

ACCESS ROAD PROFILE

0 15 30 45 90

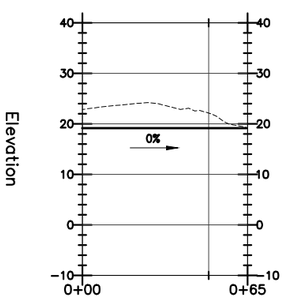

TURN AROUND PROFILE

0 15 30 45 90

BAKER DESIGN CONSULTANTS
Civil, Marine, and Structural Engineering

NO	SUBMISSION	DATE	INT
A	ALTERNATIVES MEMO	3-15-16	BJB

STATE OF MAINE
BARNEY J. BAKER
No. 5737
LICENSED
PROFESSIONAL ENGINEER

DESIGNED BY: DJB
DRAWN BY: KET
CHECKED BY: DJB
SCALE: AS SHOWN

SHEET TITLE: PIER LAYOUT 2 ACCESS ROAD PLAN AND PROFILE

PROJECT: UNIVERSITY OF NEW ENGLAND UNE MSC WATERFRONT RIDDEFORD, MAINE

DATE MARCH 2016
CONTRACT NO. 15-07
SHEET NO. 2 OF 4
REV A

\\bdc-srv\projects\15\15-07 une msc waterfront\cad\15-07 une msc waterfront civil3d (alternate design review).dwg 3/22/2016

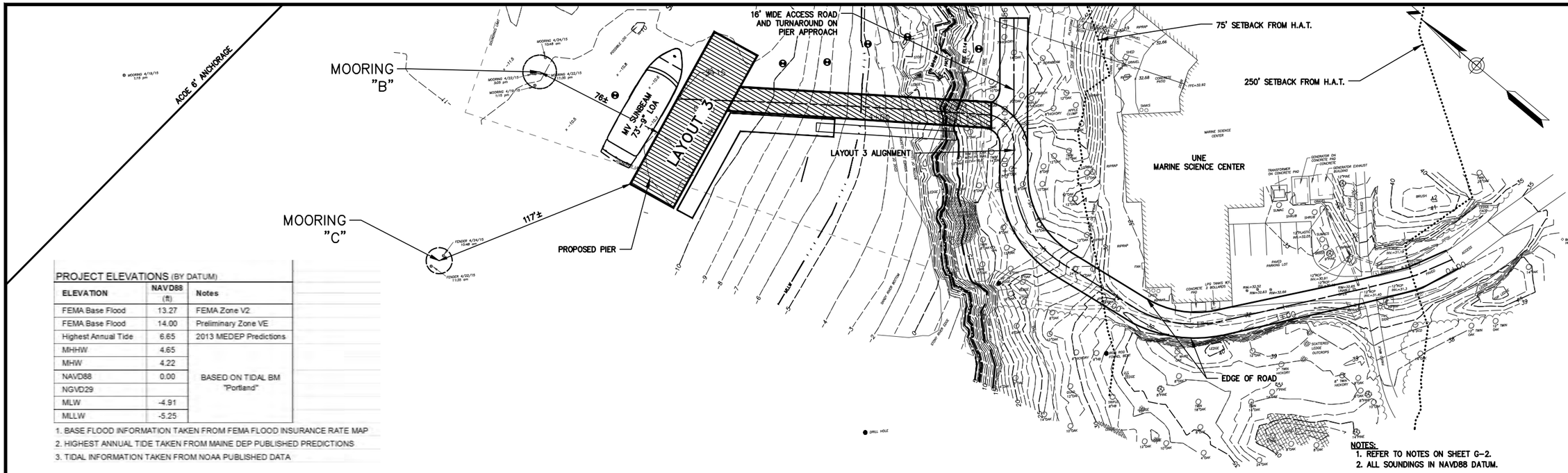

PROJECT ELEVATIONS (BY DATUM)

ELEVATION	NAVD88 (ft)	Notes
FEMA Base Flood	13.27	FEMA Zone V2
FEMA Base Flood	14.00	Preliminary Zone VE
Highest Annual Tide	6.65	2013 MEDEP Predictions
MHHW	4.65	BASED ON TIDAL BM "Portland"
MHW	4.22	
NAVD88	0.00	
NGVD29		
MLW	-4.91	
MLLW	-5.25	

1. BASE FLOOD INFORMATION TAKEN FROM FEMA FLOOD INSURANCE RATE MAP
2. HIGHEST ANNUAL TIDE TAKEN FROM MAINE DEP PUBLISHED PREDICTIONS
3. TIDAL INFORMATION TAKEN FROM NOAA PUBLISHED DATA

PLAN

0 15 30 45 90

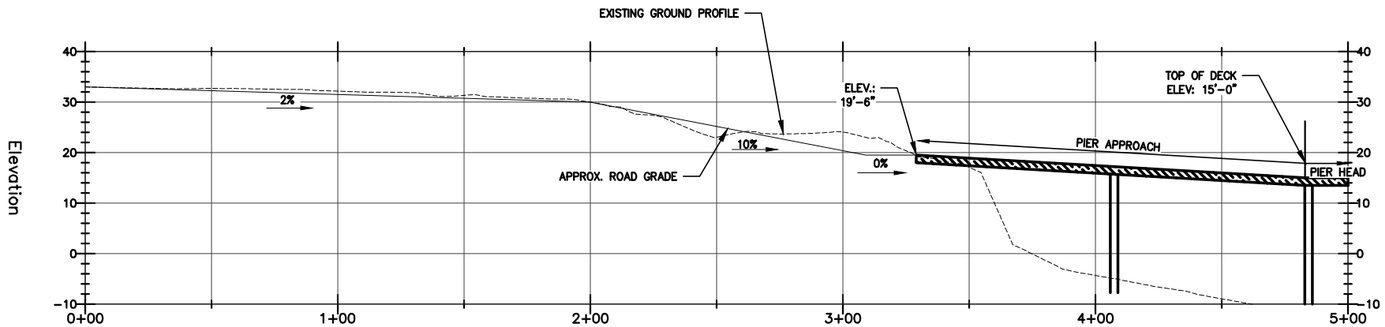

ACCESS ROAD PROFILE

0 15 30 45 90

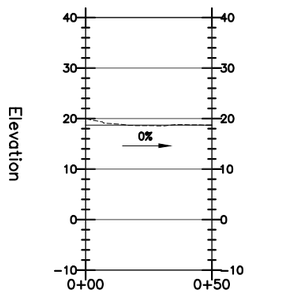

TURN AROUND PROFILE

0 15 30 45 90

BAKER DESIGN CONSULTANTS
Civil, Marine, and Structural Engineering
7 Spruce Road • Freeport • Maine • 04032 • 207-846-9724 • info@bakerdesignconsultants.com

NO.	DESCRIPTION	DATE	INT.
A	ALTERNATIVES MEMO SUBMISSION	3-15-16	BJB

BARNEY J. BAKER No. 5737 LICENSED PROFESSIONAL ENGINEER STATE OF MAINE

DESIGNED BY: DJB
DRAWN BY: KET
CHECKED BY: DJB
SCALE: AS SHOWN

SHEET TITLE: PIER SITE PLAN LAYOUT 3 SKETCH

PROJECT: UNIVERSITY OF NEW ENGLAND UNE MSC WATERFRONT BIDDEFORD, MAINE

DATE: MARCH 2016

CONTRACT NO.: 15-07

SHEET NO.: 3 OF 4

REV.: A

\\bdc-srv\projects\15\15-07 une msc waterfront\cad\15-07 une msc waterfront civil3d (alternate design review).dwg 3/22/2016

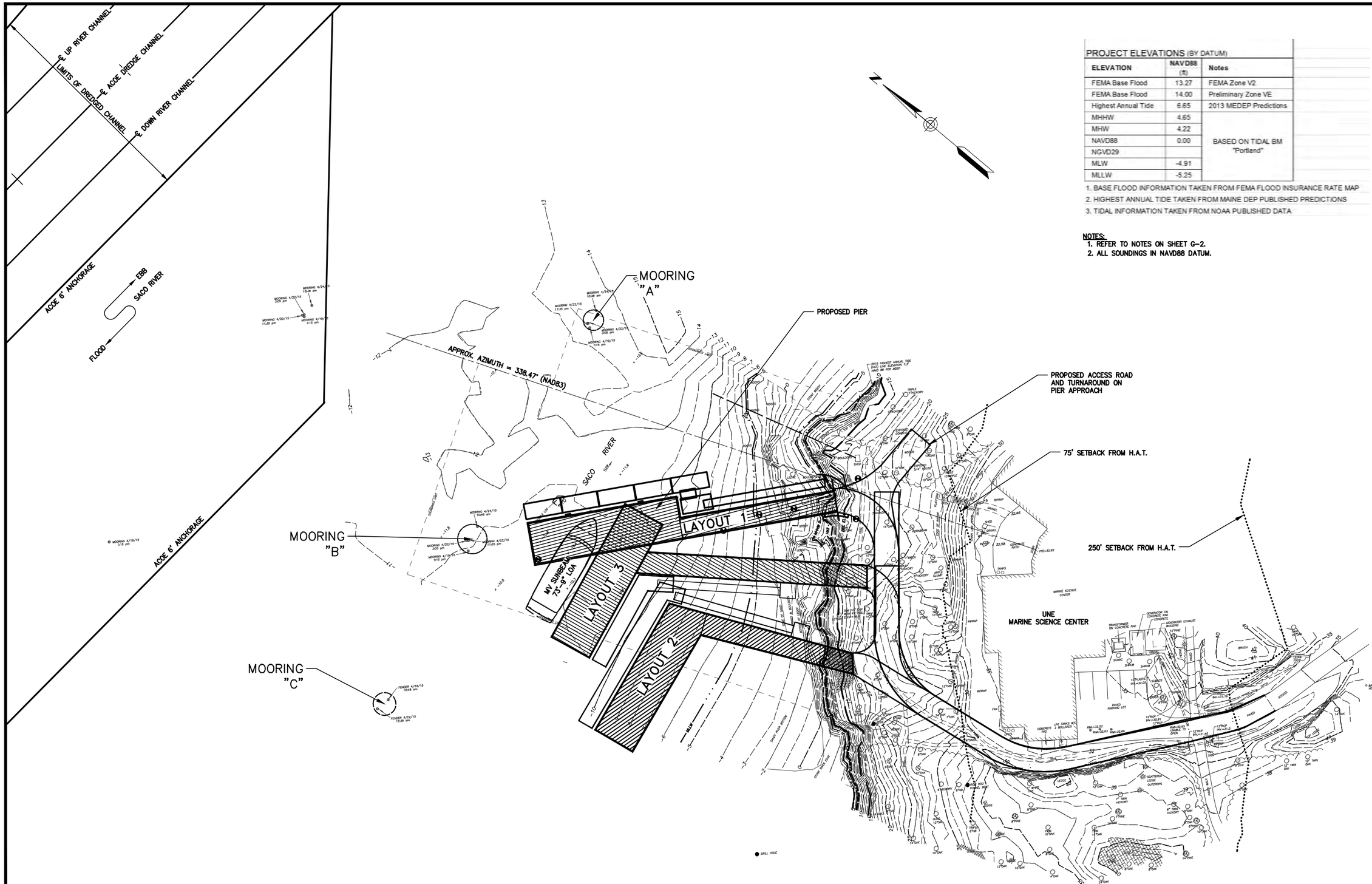

PLAN

0 15 30 45 90

PROJECT ELEVATIONS (BY DATUM)		
ELEVATION	NAVD88 (ft)	Notes
FEMA Base Flood	13.27	FEMA Zone V2
FEMA Base Flood	14.00	Preliminary Zone VE
Highest Annual Tide	6.65	2013 MEDEP Predictions
MHHW	4.65	BASED ON TIDAL BM "Portland"
MHW	4.22	
NAVD88	0.00	
NGVD29		
MLW	-4.91	
MLLW	-5.25	

1. BASE FLOOD INFORMATION TAKEN FROM FEMA FLOOD INSURANCE RATE MAP
2. HIGHEST ANNUAL TIDE TAKEN FROM MAINE DEP PUBLISHED PREDICTIONS
3. TIDAL INFORMATION TAKEN FROM NOAA PUBLISHED DATA

NOTES:
1. REFER TO NOTES ON SHEET G-2.
2. ALL SOUNDINGS IN NAVD88 DATUM.

BAKER DESIGN CONSULTANTS
Civil, Marine, and Structural Engineering
7 Spruce Road • Freeport • Maine • 04032 • 207-846-9724 • info@bakerdesignconsultants.com

NO.	DATE	INT.
A	3-15-16	BJB

ALTERNATIVES MEMO SUBMISSION

STATE OF MAINE
BARNEY J. BAKER
No. 5737
LICENSED PROFESSIONAL ENGINEER

DESIGNED BY: BJB
DRAWN BY: KET
CHECKED BY: BJB
SCALE: AS SHOWN

SHEET TITLE: PIER SITE PLAN ALTERNATIVES SKETCHES

PROJECT: UNIVERSITY OF NEW ENGLAND UNE MSC WATERFRONT BIDDEFORD, MAINE

DATE FEBRUARY 2015
CONTRACT NO. 15-07
SHEET NO. 4 OF 4
REV. A

\\bdc-srv\projects\15\15-07 une msc waterfront\cad\15-07 une msc waterfront civil3d (alternate design review).dwg 3/22/2016

Attachment 9
Permits

Saco River Corridor Commission
"Communities Working Together To Protect Our Rivers"

COMMISSION ORDER
IN THE MATTER OF

UNIVERSITY OF NEW ENGLAND 11 HILLS BEACH ROAD BIDDEFORD, ME 04005 PERMIT #20-491	SACO RIVER CORRIDOR ACT FINDINGS OF FACT AND ORDER

The Saco River Corridor Commission, created by the Maine State Legislature in the Saco River Corridor Act, 38 M.R.S.A. §951, et seq., (the Act), at a meeting held on August 28th, 2024, at the Porter Town Hall in Porter, Maine, and after a review of the application and supporting documents makes the following findings of fact:

PROJECT DESCRIPTION

1. The applicant is seeking a permit to construct a research pier with associated development, including a dock and float system, shed, and access road.

SITE LOCATION/DESCRIPTION

2. The property is described in the York County Registry of Deeds, Book 1484, Page 145.
3. Location: Lot 4 (Map 52) at 11 Hills Beach Road in Biddeford, Maine.
4. The 49.9-acre lot has approximately 3,500 feet of frontage on the Saco River
5. Most project activities are proposed within 250 feet of the high water line.
    a. The proposed pier, dock and float system, and shed (located on the pier) extend below the mean high water line of the Saco River.
    b. The access road begins slightly beyond the 250-foot buffer; as it turns parallel to the river, it enters the 75-foot buffer and only extends into the 25-foot buffer, where it connects to the pier at the shoreline of the Saco River. The proposed turnaround area is located outside of the 25-foot buffer.
6. The property is located in the General Development District.
7. The 100-year floodplain is limited to the immediate shoreline.

ANALYSIS

Pier Structure

8. The applicant proposes to construct a permanent vehicle-rated pier structure extending from the shore into the Saco River. The proposed pier consists of an approximately 130-foot-long approach section and an 80-foot-long pier head section oriented parallel to the flow of the river. The proposed pier consists of a concrete superstructure on 25 concrete-filled steel pipe piles (7 of which will be socketed to ledge, with the remaining 18 to be driven to ledge), with 30 untreated timber piles for vessel berthing and floating docks, and a pile-supported gangway lifting beam

which will allow the gangway to be removed from the water temporarily. All of the piles are located below the highest annual tide line.

9. The direct impact from all piles totals 84 square feet, while the indirect impact below the highest annual tide line from the pier footprint is 3,579 square feet.
10. A concrete abutment connecting the pier to the access road is located above the highest annual tide line.

Floating Dock System & Gangway

11. The proposed floating dock system consists of one 8 x 24-foot float, one 8 x 26-foot, 10-inch float, and one 12 x 30-foot gangway landing float to provide all-tide vessel access on the west side of the pier. A 6 x 20-foot floating dock (relocated from an existing upstream location on the property) is also proposed to provide a tie-up location for the City of Biddeford Fire Boat on the east side of the pier.
12. The applicant additionally proposes an 80 x 5-foot gangway on the west side of the pier to provide ADA-compliant access to the float system.
13. All floating docks are located below the mean lower low water line and are proposed to be restrained and guided by the timber piles. The proposal will allow vessels to tie up to the pier during all tide levels.
14. The floating dock system has a total indirect impact of 848 square feet, and the gangway has a total indirect impact of 357 square feet.

Pier Buildings

15. An 8 x 10-foot shed is proposed on the east side of the pier head to provide storage for small equipment and to house utility features (electric panels).

Access Drive

16. The applicant proposes to construct a 16-foot-wide paved access road with 2-foot-wide paved shoulders extending from the road near the Marine Science Center around the east side of the Marine Science Center to the proposed pier, as well as associated grading, drainage, and stormwater management features.
17. A turnaround is proposed adjacent to the pier to allow vehicles, including fire trucks, to redirect and exit via the access road.
18. The applicant reports that vehicles will use the existing parking spaces adjacent to the Marine Science Center and that no parking is proposed adjacent to the pier.
19. The applicant states that the proposed access road will provide construction access for the project and allow more staging to take place on land, minimizing impacts to the water.
20. They report that upland work includes stormwater management features that have been designed to meet Maine DEP Chapter 500 standards.

Summary of Statement of Necessity

21. The proposed pier will provide students and researchers year-round access to the river and ocean, including a "living laboratory" located on Ram Island in Saco Bay, which is currently inaccessible during the winter and spring when the seasonal dock and float system aren't in use. The applicant states that the pier will facilitate research activities and scientific and practical exchanges with local, regional, and national marine researchers and industry partners. They note

that the marine research afforded by the proposed year-round access will allow UNE to gather data to guide Maine's response to climate change and inform data-driven decisions impacting aquaculture, fisheries, marine law and policy, and related fields.

General Background

22. The applicant reports that the area where the pier will be located is ledge, with adjacent areas consisting of undeveloped sparsely wooded areas and coastal wetlands.
23. The applicant addressed the §959-A.(A-K) standards in the project description. Where applicable, the staff has added additional details gathered from site plans. In summary:
    a. Degradation of Air and Water Quality – no anticipated impacts.
        i. Vegetation swales and two bioretention filtration ponding areas are proposed along the access road as part of the stormwater management plans.
    b. Harmful Alteration of Wetlands – no anticipated significant impacts (84 square feet of direct impact as noted above in Item 9.)
    c. Increase in Erosion and Sedimentation –
        i. The soils in the project area are not highly erodible, and the pier is located over exposed ledge and ledge with overburden.
        ii. All construction and site alterations will be done in accordance with Maine Erosion and Sedimentation Control Best Management Practices, and the site will be permanently stabilized following completion of construction.
        iii. Site plans note that the siltation boom will be installed for the duration of the construction process.
    d. Danger of Increased Flood Damage –
        i. The structure has been designed to withstand flood impacts, and its elevation takes into account rising sea levels.
    e. Obstruction of Flood Flow – no significant impacts
    f. Damage to Fish and Wildlife Habitat – no significant impacts
    g. Despoliation of Scenic Rural, and Open Space Character of the Corridor –
        i. The project's limit of disturbance encompasses 0.92 acres, with vegetation removal taking place in that envelope to provide a cleared area for the access drive and stormwater facilities.
        ii. 44 trees, including stumps, are proposed for removal within the project area.
        iii. 10 to 25 feet of clearing is proposed on average along either side of the access road. Clearing in several areas is greater to accommodate stormwater structures.
        iv. The remaining open space will be maintained, natural surroundings will be preserved, and scenic views from neighboring properties will not be obstructed.
        v. Given the water-dependent nature of the project, it will be visible from the river.
    h. Overcrowding – no significant impacts
    i. Excessive noise – no significant impacts
    j. Obstruction to Navigation –
        i. The structures will be no closer than 208 feet from the Army Corps of Engineers anchorage area.
        ii. Site plans note that construction activities will not impact the federal navigation channel at any time.

k. Interference with Educational, Scenic, Scientific, Historic, or Archaeological Values of the Areas Designated and Approved for Inclusion within the Resource Protection District
    i. The project is not located in the Resource Protection District, and the applicant states that it will enhance the area's educational value.

24. At the August 14th, 2024, Rules Committee meeting, the Committee expressed concerns about the diminution of the vegetated buffer as a result of the proposed access road construction. They noted that the removal of vegetation in that area could increase the visual impact of the existing Marine Science Center and of the access road itself. The Committee suggested that, if possible (depending on site conditions), the applicant should propose additional plantings between the access road and the shoreline.
25. In response to the Rules Committee comments:
    a. The applicant's agent submitted an updated vegetation plan, which reduced the number of trees proposed for removal by five trees, most of which were in the 25-foot buffer. The updated vegetation plan also clarified the number of trees 8 inches in diameter and greater within the 25-foot buffer that would remain post-construction.
    b. The applicant's agent stated that it was not possible to reduce the width of the access drive to less than the currently proposed 20 feet due to the National Fire Protection Association codes.
    c. The applicant's agent submitted the Stormwater Inspection and Maintenance plans for the project, which will include routine inspections of the systems post-construction to ensure proper function.
26. Staff notes from the August 23rd, 2024, site visit state:
    a. The area has many smaller shrubby vegetation. Numerous large trees are also present, and they are proposed for removal.
    b. A cleared opening would be created between the River and the Marine Science Center.
    c. The proposed clearing (for the road) extends no closer than 25 feet from the mean high water line. However, little vegetation would remain in some areas.
27. At the August 28th, 2024, Commission meeting:
    a. Public comments were heard and considered for impacts on the Commission's standards.
    b. The applicant presented an updated revegetation plan using native plantings for a 1:1 replacement ratio.
    c. The Commission questioned the status of other agencies' review of the project.
        i. The applicant's agent stated that the US Fish and Wildlife Service had advised that the work window be limited to November to April.
    d. The applicant's representatives estimated that the finished pier, including railings, would be approximately 26 feet above the water at low tide.
    e. The applicant's agent clarified that the previously proposed classroom on the pier head had been removed from the proposal.

RELEVANT STANDARDS OF THE ACT

§957-A. Resource Protection District | §957-C. General Development District | §959-A. Requirements for granting permits | §962. General Performance Standards | Chapter 102: Standard Conditions of Approval | Chapter 103: Standards to Address the Environmental Factors

BASED ON THE ABOVE FINDINGS, as determined at a duly noticed Commission Meeting, the Commission draws the following conclusions:

1. The applicant has shown the proposed design to be within the meaning of the Act.
2. The proposed use will not unreasonably involve any of the factors enumerated in §959-A(1)(A)-(K) of the Act.

THEREFORE, the Commission APPROVES the application of the University of New England, #20-491, for a permit to construct a research pier with associated development on the property owned by them, provided the activity is carried out according to the application and UPON THE FOLLOWING CONDITIONS:

1. Standard Conditions of Approval (copy attached).
2. All in-water portions of the existing research pier shall be removed.

This decision, including any of its conditions, may be appealed pursuant to 38 M.R.S. §968, except that no appeal pursuant to 38 M.R.S. §968 shall be taken from a decision of the Commission which decision was made without a public hearing until a request for reconsideration has been submitted to the Commission, and the Commission has made a final determination in the matter. Any person wishing to file an appeal or to request reconsideration must do so within 30 days of the Commission's written decision and order. Requests for reconsideration must be submitted in accordance with applicable Commission regulations. To be valid, all permits must meet all federal, state, and local ordinances and regulations.

DONE AND DATED AT CORNISH, MAINE, THIS 13TH DAY OF SEPTEMBER 2024.

SACO RIVER CORRIDOR COMMISSION

BY: Ben Pinault 9/13/24

Benjamin Pinault, Chairperson — Dated



Registry of Deeds Notarization Form
Saco River Corridor Commission Permit #20-491 University of New England

Acknowledgment

State of Maine
County of York

This record was acknowledged before me on this 13th day of September 2024 by Benjamin Pinault.

Haley L. Lachance
Signature of Notary Public

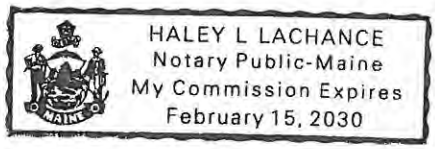

Haley Lachance
Notary Public, State of Maine
My commission expires: February 15, 2030

STATE OF MAINE
DEPARTMENT OF ENVIRONMENTAL PROTECTION
17 STATE HOUSE STATION AUGUSTA, MAINE 04333-0017

DEPARTMENT ORDER

IN THE MATTER OF

UNIVERSITY OF NEW ENGLAND	) NATURAL RESOURCES PROTECTION ACT
Biddeford, York County	) COASTAL WETLAND ALTERATION
COMMERCIAL PIER SYSTEM	) WATER QUALITY CERTIFICATION
L-18314-4P-BE-N (approval)	) FINDINGS OF FACT AND ORDER

Pursuant to the provisions of 38 M.R.S. §§ 480-A–480-JJ, Section 401 of the Clean Water Act (33 U.S.C. § 1341), and Chapters 310, 315, and 335 of Department rules, the Department of Environmental Protection (Department) has considered the application of UNIVERSITY OF NEW ENGLAND (applicant) with the supportive data, agency review comments, public comments, and other related materials on file and FINDS THE FOLLOWING FACTS:

1. PROJECT DESCRIPTION:

A. History of Project: In Department Order #L-18314-22-A-N, dated April 12, 1993, the Department granted after-the-fact approval to the University of New England for an expansion of the main campus. In Department Order #L-18314-22/31-J-M, dated December 19, 1996, the Department approved the construction of athletic facilities, a service road, a pier system, and seasonal floating dock on the Saco River. In Department Order #L-18314-22-L-A, dated May 31, 2000, the Department approved the construction of the Marine Science and Research Center and included a modification to the pier and floating dock. In Department Order #L-18314-22-AY-M/L-18314-4P-AZ-M, dated July 13, 2017, the Department approved the addition of two six-foot wide by 16-foot long seasonal floats attached seaward and perpendicular to the existing permanent floats oriented parallel to shore. A second, seasonal pier system was installed on Jordan Point in 2016. In Department Order #L-18314-22-BC-M/4P-BD-N, dated December 7, 2023, the Department approved the replacement of the second seasonal pier with a permanent pier system consisting of a six-foot wide by 63-foot long fixed pier, an existing four-foot wide by 48-foot long seasonal aluminum gangway, and an existing 10-foot long by 60-foot wide seasonal float system. The completed project resulted in 16 square feet of direct impacts and 1732 square feet of indirect impacts to the coastal wetland.

B. Summary: The applicant proposes to construct a new commercial size pier to provide all-tide access for the Marine Science Center and dock space for the City of Biddeford fireboat used for public safety. The proposed permanent pier structure will be built in three sections: section one consist of a 23-foot wide by 30-foot deck with a security gate, that connects to the second 14-foot wide by 100-foot long pier structure that seaward into the river, and the third pier section a 23-foot wide an 80-foot long pier head that will be oriented parallel to shore and a five-foot wide by 80-foot long permanent gangway perpendicular to the shore. The pier head and gangway will be flanked by four permanent floats running end to end parallel to shore; an 8-foot wide by

24-foot long float an 8-foot wide by 27-foot long float, a 12-foot wide by 30-foot long gangway landing float to provide all-tide access on the west side of the pier and a six-foot wide by 20-foot float to provide a tie-up location for the City of Biddeford's Fire Boat on the east side of the pier, both perpendicular to the shore. The pier system will be supported by 25 concrete-filled steel pipe piles and a concrete abutment which connects the pier to the proposed access road. The project as proposed will result in 84 square feet of direct impacts to the coastal wetland due to pilings, and 3,579 square feet of indirect impacts to the coastal wetland due to shading from the pier, ramp, and floats. The large size of the pier and gangway will accommodate an outdoor covered classroom, ADA-compliant access and fireboat tiedown float, and vehicular access to the pier for transportation of research and emergency equipment. Between this proposed pier and the currently existing pier system, cumulative direct impacts to the coastal wetland will total 100 square feet, and cumulative indirect impacts to the coastal wetland will total 5,311 square feet.

In addition to the proposed pier system, an upland access road connecting the existing road to the proposed pier will be constructed, including associated site grading, drainage, and stormwater management features. Work on the access road will result in approximately 475 square feet of impacts adjacent to the coastal wetland. Upland work proposed will not exceed 40,000 square feet of additional disturbed area and thus is exempt from permitting pursuant to M.R.S 38 §488(27)(A).

The proposed project is shown on a set of plans, the first of which is titled "University of New England Marine Science Center Pier", completed by GEI Consultants, Inc. and dated April 22, 2024. The project site is located at 11 Hills Beach Road in the Town of Biddeford.

C. Current Use of the Site: The project site is located on an approximately 50-acre parcel of land that is developed with various university buildings and a permanent pier system. The parcel is identified as Lot 4 on Map 52 of the City of Biddeford's tax maps.

D. Public Interest: The Department received emails from one individual between September 4 and December 11, 2024. The interested person expressed concerns related to the Town's project review process. Additionally, the interested person stated that the applicant did not consider alternative locations for the pier that would be less impactful to the resource. After reviewing the application, the Department determined that the applicant provided a sufficient alternative analysis which is further discussed in Section 4.

The interested person submitted a public hearing request on July 1, 2024. The request was reviewed by the Department and a response sent on August 20, 2024, citing that the application did not meet the Chapter 2 criteria for the Board to hold a hearing.

2. EXISTING SCENIC, AESTHETIC, RECREATIONAL OR NAVIGATIONAL USES:

The Natural Resources Protection Act (NRPA), in 38 M.R.S. § 480-D(1), requires the applicant to demonstrate that the proposed project will not unreasonably interfere with existing scenic, aesthetic, recreational and navigational uses.

In accordance with Chapter 315, *Assessing and Mitigating Impacts to Scenic and Aesthetic Uses* (06-096 C.M.R. ch. 315, effective June 29, 2003), the applicant submitted a copy of the Department's Visual Evaluation Field Survey Checklist as Appendix A to the application along with a description of the property and the proposed project. The applicant also submitted several photographs of the proposed project site and surroundings including an aerial photograph of the project site.

The proposed project is located in the Saco River, which is a scenic resource visited by the general public, in part, for the use, observation, enjoyment and appreciation of its natural and cultural visual qualities. Given the piers on abutting properties and the existing pier on the same parcel, the proposed pier will not substantially alter the visual aesthetic of the riverbank from the river. The proposed pier system is of similar size, scale, and design as nearby pier systems, including a commercial marina with slips located directly across the river and visible from the project site.

The Department staff utilized the Department's Visual Impact Assessment Matrix in its evaluation of the proposed project and the Matrix showed an acceptable potential visual impact rating for the proposed project. Based on the information submitted in the application and the visual impact rating, the Department determined that the location and scale of the proposed activity is compatible with the existing visual quality and landscape characteristics found within the viewshed of the scenic resource in the project area.

The Department of Marine Resources (DMR) reviewed the project and stated that the proposed project should not cause any significant adverse impact to navigation or recreation based on the nature of the project and its location.

The Department finds that the proposed activity will not unreasonably interfere with existing scenic, aesthetic, recreational or navigational uses of the river.

3. SOIL EROSION:

The NRPA, in 38 M.R.S. § 480-D(2), requires the applicant to demonstrate that the proposed project will not cause unreasonable erosion of soil or sediment nor unreasonably inhibit the natural transfer of soil from the terrestrial to the marine or freshwater environment.

Construction will take place from the upland and by barge. Access by land will occur on existing roads, and the proposed new road will be started early in construction to provide an additional route for construction access, material deliveries, and staging. When the site is being accessed by barge, the contractor will avoid the nearby federal navigation

channel and adjacent waterfront facilities during construction activity. Any work within the resource will be conducted in compliance with the standard November 8th-April 9th in-water work window discussed in Finding 4. A certified erosion control contractor will be on site.

The Department finds that the activity will not cause unreasonable erosion of soil or sediment nor unreasonably inhibit the natural transfer of soil from the terrestrial to the marine or freshwater environment.

4. HABITAT CONSIDERATIONS:

The NRPA, in 38 M.R.S. § 480-D(3), requires the applicant to demonstrate that the proposed project will not unreasonably harm significant wildlife habitat, freshwater wetland plant habitat, threatened or endangered plant habitat, aquatic or adjacent upland habitat, travel corridor, freshwater, estuarine or marine fisheries or other aquatic life.

The project site consists of ledge in the upper intertidal, grading to rockweed-covered rocky shore then to mixed coarse and fine sediments. Eelgrass resources were documented in the subtidal near the project area prior to 1997 but have not been mapped in recent years.

In its review, the Department of Marine Resources (DMR) stated that the project as proposed would have direct impacts to marine resources and habitat in the footprint of the pier, and recommended that if piles are driven outside of the winter work window of November 8th-April 9th. The mouth of the Saco River is utilized by diadromous fish species including Atlantic Salmon, alewife, and sea run brook trout. Atlantic and short nose sturgeon may be present year round in this area.. DMR further recommended that the applicant use a vibratory hammer or a bubble screen for noise mitigation.

The applicant concurred that work will only occur during the winter work window.

According to the Department's Geographic Information System (GIS) database there are no mapped Essential or Significant Wildlife Habitats located at the site. The Maine Department of Inland Fisheries and Wildlife (MDIFW) reviewed the proposed project and stated that the project is located adjacent to but outside of Tidal Waterfowl and Wading Bird Habitat (TWWH), a designated Significant Wildlife Habitat. MDIFW stated that minimal impacts to piping plover and Blanding's turtle habitat are anticipated and provided general recommendations including minimizing vegetation removal and soil disturbance, and that time spent in the water should be minimized to the greatest extent practicable.

The applicant responded to these comments, and agreed to minimize vegetation removal, soil disturbance, and time spent in the water.

The Department finds that the activity will not unreasonably harm any significant wildlife habitat, freshwater wetland plant habitat, threatened or endangered plant habitat, aquatic

or adjacent upland habitat, travel corridor, freshwater, estuarine or marine fisheries or other aquatic life provided in-water work is only conducted between November 8th-April 9th of any given year

5. WATER QUALITY CONSIDERATIONS:

The applicant proposes to use lumber treated with chromated copper arsenate (CCA) to construct the pier. To protect water quality, all CCA-treated lumber must be cured on dry land in a manner that exposes all surfaces to the air for 21 days prior to the start of construction.

Provided that CCA-treated lumber is cured as described above, the Department finds that the proposed project will not violate any state water quality law, including those governing the classification of the State's waters.

6. WETLANDS AND WATERBODIES PROTECTION RULES:

The proposed project will result in 84 square feet of direct impacts and 4,784 square feet of indirect impacts to the coastal wetland from the new pier system. The overall cumulative impacts from the existing pier and proposed project will be 100 square feet of direct impacts to the coastal resource and 5,311 square feet of indirect impacts to the coastal resource. Coastal wetlands are wetlands of special significance.

The *Wetlands and Waterbodies Protection Rules*, 06-096 C.M.R. ch. 310 (last amended November 11, 2018), interpret and elaborate on the Natural Resources Protection Act (NRPA) criteria for obtaining a permit. The rules guide the Department in its determination of whether a project's impacts would be unreasonable. A proposed project would generally be found to be unreasonable if it would cause a loss in wetland area, functions and values and there is a practicable alternative to the project that would be less damaging to the environment. Each application for a NRPA permit that involves a coastal wetland alteration must provide an analysis of alternatives in order to demonstrate that a practicable alternative does not exist.

A. Avoidance. An applicant must submit an analysis of whether there is a practicable alternative to the project that would be less damaging to the environment and this analysis is considered by the Department in its assessment of the reasonableness of any impacts. Additionally, for activities proposed in, on, or over wetlands of special significance the activity must be among the types listed in Chapter 310, § 5(A) or a practicable alternative less damaging to the environment is considered to exist and the impact is unreasonable. A pier is a water dependent use and its proposed construction is among the activities specifically provided for in Chapter 310, § 5(A)(1)(c). Additionally, any project related to health and safety is among the activities specifically provided for in Chapter 310, § 5(A)(1)(a).

The applicant submitted an alternatives analysis for the proposed project completed by Site Design Associates and dated June 17, 2024, with a last revision date of December

10, 2024. The purpose of the proposed project is to provide all-tide, year-round access to the resource for research and education operations associated with the Arthur P. Girard Marine Science Center (GMSC) at the University of New England. A secondary project purpose is to provide docking space for the City of Biddeford's fireboat for emergency response and safety. The applicant plans to launch a variety of research vessels from the proposed pier, including a 31-foot long research vessel and potentially larger ones in the future. The City's fireboat is 19 feet long. The applicant considered not building the new pier system and instead utilizing the existing pier on the parcel; however, this existing pier is seasonal, including the floats that are hauled out of the water each winter limiting year-round access that is required to support the a Universities' marine science programs. Additionally, the existing pier does not provide a docking area for the City of Biddeford's fireboat. Therefore, this alternative was rejected. The applicant considered a seasonal gangway and l floats; however, research and access to the water is required for emergency response from the City and for year-round, all-tide access to the resource for educational purposes. Finally, the applicant considered using public facilities including marinas, boat launches and moorings to moor and launch research vessels; however, access to the water can be time-sensitive due to course schedules or the need to access the water during certain tide cycles. With shuttling of staff, students, and equipment, and the lack of reliable parking, this alternative was rejected. The private marinas in the area have long waitlists for private slips and do not have the capacity to handle the frequent use and group size that the University requires to meet their education and research mission

B. Minimal Alteration. In support of an application and to address the analysis of the reasonableness of any impacts of a proposed project, an applicant must demonstrate that the amount of coastal wetland to be altered will be kept to the minimum amount necessary for meeting the overall purpose of the project. During the planning phase of this project, the applicant selected the pier location with the shortest length necessary to reach adequate water depths for all -tide access. In addition, the dimensions of the pier head were reduced from 28-feet wide by 100-feet long to the currently proposed 23-feet wide by 80-feet long to reduce impacts to the coastal resource.

C. Compensation. In accordance with Chapter 310, § 5(C)(6)(b), compensation may be required to achieve the goal of no net loss of coastal wetland functions and values. This project will not result in over 500 square feet of fill in the resource, which is the threshold over which compensation is generally required. Further, the proposed project will not have an adverse impact on marine resources or wildlife habitat as determined by DMR and MDIFW. For these reasons, the Department determined that compensation is not required.

The Department finds that the applicant has avoided and minimized coastal wetland impacts to the greatest extent practicable, and that the proposed project represents the least environmentally damaging alternative that meets the overall purpose of the project.

7. OTHER CONSIDERATIONS:

The Department finds, based on the design, proposed construction methods, and location, the proposed project will not inhibit the natural transfer of soil from the terrestrial to the marine environment, will not interfere with the natural flow of any surface or subsurface waters, and will not cause or increase flooding. The proposed project is not located in a coastal sand dune system, is not a crossing of an outstanding river segment, and does not involve dredge spoils disposal or the transport of dredge spoils by water.

BASED on the above findings of fact, and subject to the conditions listed below, the Department makes the following conclusions pursuant to 38 M.R.S. §§ 480-A–480-JJ and Section 401 of the Clean Water Act (33 U.S.C. § 1341):

A. The proposed activity will not unreasonably interfere with existing scenic, aesthetic, recreational, or navigational uses.

B. The proposed activity will not cause unreasonable erosion of soil or sediment.

C. The proposed activity will not unreasonably inhibit the natural transfer of soil from the terrestrial to the marine or freshwater environment.

D. The proposed activity will not unreasonably harm any significant wildlife habitat, freshwater wetland plant habitat, threatened or endangered plant habitat, aquatic or adjacent upland habitat, travel corridor, freshwater, estuarine, or marine fisheries or other aquatic life provided winter work windows are utilized as described in Finding 3.

E. The proposed activity will not unreasonably interfere with the natural flow of any surface or subsurface waters.

F. The proposed activity will not violate any state water quality law including those governing the classifications of the State's waters provided that CCA-treated lumber is cured as described in Finding 5.

G. The proposed activity will not unreasonably cause or increase the flooding of the alteration area or adjacent properties.

H. The proposed activity is not on or adjacent to a sand dune.

I. The proposed activity is not on an outstanding river segment as noted in 38 M.R.S. § 480-P.

THEREFORE, the Department APPROVES the above noted application of UNIVERSITY OF NEW ENGLAND to construct a research pier as described in Finding 1, SUBJECT TO THE ATTACHED CONDITIONS, and all applicable standards and regulations:

1. Standard Conditions of Approval, a copy attached.

2. The applicant shall take all necessary measures to ensure that their activities or those of their agents do not result in measurable erosion of soil on the site during the construction of the project covered by this approval.

3. Severability. The invalidity or unenforceability of any provision, or part thereof, of this License shall not affect the remainder of the provision or any other provisions. This License shall be construed and enforced in all respects as if such invalid or unenforceable provision or part thereof had been omitted.

4. Construction is only allowed from November 8th-April 9th of any given year.

5. All CCA-treated lumber shall be cured on dry land in a manner that exposes all surfaces to the air for 21 days prior to the start of construction.

THIS APPROVAL DOES NOT CONSTITUTE OR SUBSTITUTE FOR ANY OTHER REQUIRED STATE, FEDERAL OR LOCAL APPROVALS NOR DOES IT VERIFY COMPLIANCE WITH ANY APPLICABLE SHORELAND ZONING ORDINANCES.

DONE AND DATED IN AUGUSTA, MAINE, THIS 11TH DAY OF APRIL, 2025.

DEPARTMENT OF ENVIRONMENTAL PROTECTION

BY:_____
For: Melanie Loyzim, Commissioner

PLEASE NOTE THE ATTACHED SHEET FOR GUIDANCE ON APPEAL PROCEDURES.

PCS/L18314BEN/ATS#92653

DEPARTMENT OF THE ARMY
U.S. ARMY CORPS OF ENGINEERS, NEW ENGLAND DISTRICT
NEW ENGLAND DISTRICT OFFICE
696 VIRGINIA ROAD
CONCORD MASSACHUSETTS 01742-2751

March 28, 2025

Regulatory Division

Andrew Phillippe
University of New England
11 Hills Beach Road
Biddeford, Maine 04005
Via Email: aphilippe@une.edu

Dear Mr. Phillippe:

This letter is in response to the application you submitted to the U.S. Army Corps of Engineers (USACE), New England District on June 21, 2024 for a Department of the Army general permit verification. We have assigned this project file number NAE-2024-01628, which you should reference in all correspondence with this office.

A review of the information provided indicates the proposed work includes the construction of a permanent pier consisting of a 28-foot long by 24-foot-wide landing; a 90-foot long by 14-foot-wide approach pier; and an 80-foot long by 24-foot-long pier. Additionally, your project includes a floating dock system consisting of an 80-foot long by 5-foot-wide gangway; a 30-foot long by 12-foot wide float; a 24-foot long by 8-foot wide float; and a 27-foot long by 8-foot wide float, and a 20-foot long by 6-foot wide float. The project is located in the Saco River; at 11 Hills Beach Road, at Latitude 43.458630º and Longitude -70.389050º; in Biddeford, York County, Maine. The work is shown on the enclosed plans titled “University of New England Marine Science Center Pier”, on 38 sheets, and dated 8/14/2024.

Based on the information you have provided; we verify that the activity is authorized under General Permit *2. Structures, Floats, and Lifts* of the October 14, 2020, federal permit known as the Maine General Permits (GPs). If the extent of the project area and/or nature of the authorized impacts to waters are modified, a revised application must be submitted to this office for written approval before work is initiated. You can find a copy of these permits at:
https://www.nae.usace.army.mil/Missions/Regulatory/State-General-Permits/

Any deviation from the terms and conditions of the permit, or your submitted plans, may subject the permittee to the enforcement provisions of our regulations. Therefore, in the event changes to this project are contemplated, it is recommended you coordinate with this office prior to proceeding with the work. This office must approve any changes before you undertake them. You must perform this work in compliance

with the terms and conditions of the GPs listed above, and also in compliance with the following special conditions:

1. The permittee shall complete and return the enclosed Work-Start Notification Form to this office at least two weeks prior to the anticipated construction start date.

2. The permittee shall complete and return the enclosed Completion Certification Form to this office at least one month following the completion of the authorized work.

3. You must maintain the activity herein in good condition and in conformance with the terms and conditions of this authorization. You are not relieved of this requirement if you abandon the permitted activity, although you may make a good faith transfer to a third party in compliance with a general condition of these GPs. Should you wish to cease to maintain the authorized activities, or should you desire to abandon it without a good faith transfer, you must obtain a modification of this authorization from this office, which may require restoration of the area.

4. All construction shall be completed in accordance with the limits of construction and construction sequences detailed on the enclosed plan drawings, titled “University of New England Marine Science Center Pier,” on a total of 38 sheets, and dated 8/14/2024. If you change the plans or construction methods for work within or adjacent to the Saco River, please contact us immediately to discuss modification of this authorization. The USACE must approve any changes before you undertake them.

5. A “soft start” is required to allow animals an opportunity to leave the project vicinity before sound pressure levels increase. In addition to using a soft start at the beginning of the workday for pile driving, one must also be used at any time following cessation of pile driving for a period of 30 minutes or longer.

a) For impact pile driving: Pile driving will commence with an initial set of three strikes by the hammer at 40% energy, followed by a one-minute wait period, then two subsequent 3-strike sets at 40% energy, with one-minute waiting periods, before initiating continuous impact driving.

b) For vibratory pile installation: Pile driving will be initiated for 15 seconds at reduced energy followed by a one-minute waiting period. This sequence of 15 seconds of reduced energy driving, one-minute waiting period will be repeated two additional times, followed immediately by pile-driving at full rate and energy.

6. The work authorized herein shall not be conducted during the time of year (TOY) restriction of April 10 to November 7 in order to minimize adverse impacts to the Atlantic sturgeon, shortnose sturgeon.

This verification is valid until October 14, 2025. You must commence or be under contract to commence the work authorized herein by October 14, 2025 and complete

the work by October 14, 2026. If not, you must contact this office to determine the need for further authorization before beginning or continuing the activity. It is recommended that you contact this office before this authorization expires to discuss if permit reissuance is a possibility.

This GP verification and any associated authorizations does not preclude the necessity to obtain any other federal, state, or local permits, licenses, and/or certifications, which may be required.

If you have any questions related to this verification or have issues accessing documents referenced in this letter, please contact Jana Jacobson, Project Manager at (207) 233-2117, or by email at Jana.L.Jacobson@usace.army.mil. This agency continually strives to improve our customer service. To better serve you, please complete the Customer Service Survey located at: https://regulatory.ops.usace.army.mil/customer-service-survey/.

Sincerely,

Jon T. Coleman
Team Leader
Technical Regional Execution Center
North Atlantic Division

Enclosures

Cc (w/enclosures):
Tom Saucier, Site Design Associates (via tsaucier@sitedesignassociates.biz)

Attachment 10
MHPC Clearance

MAINE HISTORIC PRESERVATION COMMISSION
55 CAPITOL STREET
65 STATE HOUSE STATION
AUGUSTA, MAINE
04333

JANET T. MILLS
GOVERNOR

KIRK F. MOHNEY
DIRECTOR

May 15, 2023

Mr. Tom Saucier, P.E.
Site Design Associates
23 Whitney Way
Topsham, Maine 04086

Project: MHPC# 0500-23 University of New England; 11 Hills Beach Road
Permanent Pier and Float System

Town: Biddeford, ME

Dear Mr. Saucier:

In response to your recent request, I have reviewed the information received April 13, 2023 to initiate consultation on the above referenced projects in accordance with Section 106 of the National Historic Preservation Act of 1966, as amended (NHPA).

Dr. Arthur Spiess of my staff has carefully reviewed our February 7, 2000 letter concerning areas of archaeological site significance on the UNE campus, and the Phase III report that formed the background of these recommendations. We note that some of the areas of the proposed access road and the head of the pier fall outside of the areas found not to be contributing to the overall significance of the archaeological site(s) on the UNE campus (specifically areas 99.1, 99.2 and 99.8. Moreover, the intensity of previous archaeological testing along the now-proposed access road (especially within area 99.1).

Based on the information submitted, I have concluded that the proposed work will have **no adverse effect** upon historic properties.

However, our finding is *conditional* upon the following:

1) We recommend that one or more archaeologists monitor the initial clearing of soil from the route of the access road and be allowed enough time to recover information from any subsoil features that are present. It would be most important to monitor the access road from the curve in the road to be located just east of the north wall of the marine science center to the head of the proposed pier.

Please contact Megan M. Rideout at (207) 287-2992 or megan.m.rideout@maine.gov if we can be of further assistance in this matter.

Sincerely,

Kirk F. Mohney

Kirk F. Mohney
State Historic Preservation Officer

PHONE: (207) 287-2132 FAX: (207) 287-2335

Attachment 11
Notice to Proceed
With External Reviews

City of Biddeford, Maine

The Office of
City Manager
James A. Bennett
Email: james.bennett@biddefordmaine.org

August 19, 2024

University of New England
11 Hills Beach Road
Biddeford, Maine 04005

Attention: Mr. Alan Thibeault, VP of University Operations

RE: Notice to Proceed with External Reviews

Dear Mr. Thibeault,

On August 9, 2024, I received written clarification from Mr. Wayne Duffett, PE of TECAssociates that UNE's proposed Research Pier and Float System has complied with City Code 74-35 subsections (c) 1-10. Those sections are as follows:

(1) A formal boundary survey that has been documented at the Registry of Deeds.
(2) A copy of the boundary survey showing the littoral zone, established by extending property lines seaward.
(3) A location map from a portion of a USGS topographic map or coastal chart.
(4) Distance to navigable channels or any federal navigation project.
(5) Mean high- and low-water boundary.
(6) A plan view on the drawing(s) that shows the location and dimensions of the applicant's structure(s) in relation to the applicant's property lines.
(7) A typical cross section/side view of the applicant's structures on the drawing(s).
(8) Evidence that owners of abutting properties have been notified of the applicant's intended project.
(9) Evidence that the 1) Maine Historic Preservation Commission, 2) Aroostook Band of Micmac, 3) Passamaquoddy Tribe of Indians: Pleasant Point; Indian Township, 4) Houlton Band of Maliseet Indians, and 5) Penobscot Indian Nation have been notified of the applicant's intended project.
(10) Completed applications to the Army Corps of Engineers, Department of Environmental Protection and Biddeford Code Enforcement. A regulatory permit from the Saco River Corridor Commission may also be required in some instances.

Based on this information and in harmony with my earlier communications, please consider this as formal notification from the City of Biddeford that the application has been found in compliance with

the above mention City Code. That finding allows the application to proceed in the next steps of the review process; namely formal review by all agencies except those that are part of the City of Biddeford. After each and all of those processes are complete, the City will move forward with the final review(s) by agents and Committees of the City.

While I don't believe it is necessary, let me empathically state that this communication does not in any form, imply that the City has in any way made a determination that the location submitted has been approved. Said approval will considered after completion of all process and in compliance with applicable laws, regulations. This includes all local ordinances.

Please feel free to reach out to me if you have any questions

Sincerely,

James A. Bennett
City Manager

CC: Biddeford Mayor and City Council

Attachment 12
Photo of shed



Attachment 13
Light Fixture Information

BEACON
design . performance . technology

URBAN SERIES

URBAN LUMINAIRE

DATE: | LOCATION:

TYPE: | PROJECT:

CATALOG #:

FEATURES

- Decorative transitional style lighting fixture series is suitable for walkway lighting and wall mounting
- Two unique shade and style options
- LED turtle-friendly option available
- Integral Surge and Thermal Protection



Shown with arm

C US

*3000K and warmer CCTs only

CONTROL TECHNOLOGY

energeni

SPECIFICATIONS

CONSTRUCTION

- The drivers shall be located in the top cast housing and shall be accessible without tools by hinging the lower shade assembly. The driver and all electrical components shall be on a tray
- The lower shade shall be made from a one-piece aluminum spinning
- The housing is designed for LED thermal management without the use of metallic screens, cages, or fans. The top casting shall be able to be pendent mounted in place with a stainless steel safety pin and then permanently held in place with four stainless steel bolts

ELECTRICAL

- 100V through 277V, 50 Hz to 60 Hz (UNV), or 347V or 480V input
- Power factor is ≥0.90 at full load
- Dimming drivers are standard with connections for external dimming equipment available upon request
- Component-to-component wiring within the luminaire may carry no more than 80% of rated load and is listed by UL for use at 600VAC at 50°C or higher
- Plug disconnects are listed by UL for use at 600 VAC, 13A or higher. 13A rating applies to primary (AC) side only
- Fixture electrical compartment shall contain all LED driver components
- Button photocell available
- Ambient operating temperature -40°C to 40°C

ELECTRICAL (CONTINUED)

- Surge protection - 20KA
- Lifeshield™ Circuit - protects luminaire from excessive temperature. The device shall activate at a specific, factory-preset temperature, and progressively reduce power over a finite temperature range. A luminaire equipped with the device may be reliably operated in any ambient temperature up to 55°C (131°F). Operation shall be smooth and undetectable to the eye. Thermal circuit is designed to “fail on”, allowing the luminaire to revert to full power in the event of an interruption of its power supply, or faulty wiring connection to the drivers. The device shall be able to co-exist with other 0-10V control devices (occupancy sensors, external dimmers, etc.)

CONTROLS

- Available with Energeni for optional set dimming, timed dimming with simple delay, or timed dimming based on time of night visit

FINISH

- IFS polyester powder-coat electrostatically applied and thermocured
- IFS finish consists of a five stage pretreatment regimen with a polymer primer sealer and top coated with a thermoset super TGIC polyester powder coat finish
- The finish meets the AAMA 605.2 performance specification which includes passing a 3000 hour salt spray test for corrosion resistance and resists cracking or loss of adhesion per ASTM D522 and resists surface impacts of up to 160 inch-pounds

CERTIFICATIONS

- NRTL Certified, UL8750, UL 1598 and CSA22.2#250. 13-14 for wet locations
- IDA approved
- This product is approved by the Florida Fish and Wildlife Conservation Commission. Separate spec available.

WARRANTY

- 5 year warranty

KEY DATA	
Lumen Range	3,300–13,000
Wattage Range	27.8–137.5
Efficacy Range (LPW)	61–87

© 2024 Current Lighting Solutions, LLC. All rights reserved. Information and specifications subject to change without notice. All values are design or typical values when measured under laboratory conditions.

BEACON
design . performance . technology

URBAN SERIES
URBAN LUMINAIRE

DATE: LOCATION:
TYPE: PROJECT:
CATALOG #:

ORDERING GUIDE

Example: URB–CAP-21–36L-120–5K7–UNV–4–NRNW–BLT

CATALOG #

Model	Lens Option	Engine–Watts	CCT/CRI[4]	Voltage	Optics[2]	Electrical Options
URB Urban	**CAP-21** 21" Capitol	**18L-25** 25W, LED array	**3K7** 3000K, 70 CRI	**UNV** 120-277V	**FR** Type I	**PCU** Button Photocell, Universal
	MRDS-21 21" Miramar deep shade	**18L-39** 39W, LED array	**4K7** 4000K, 70 CRI	**347** 347V	**2** Type II	
	MAR-21 21" Maritas	**18L-50** 50W, LED array	**5K7** 5000K, 70 CRI	**480** 480V	**3** Type III	
	CAP-26 26" Capitol	**18L-70** 70W, LED array	**3K8** 3000K, 80 CRI		**4F** Type IV forward	
	MRSS-26 26" Miramar shallow shade	**18L-90** 90W, LED array	**4K8** 4000K, 80 CRI		**4W** Type IV wide	
	MRDS-26 26" Miramar deep shade	**18L-110** 110W, LED array	**5K8** 5000K, 80 CRI		**5QN** Type V square narrow	
	MAR-26 26" Maritas	**36L-120** 120W, LED array	**AM** Monochromatic Amber, 595nm		**5QW** Type V square wide	
		36L-135 135W, LED array			**5RW** Type V rectangular wide	
		36L-155 155W, LED array			**5W** Type V round wide	
		36L-175 175W, LED array			**BC** Backshield (available for FR, 2, 3, 4, 4W Opctics)	

Control Options	Mounting Style	Style	Finish	Options
GENI-XX Energeni[3]	**PM** Pendant mount	**NRNW** No rings	**BLT** Black Matte Textured	**BC** Backlight Control
XX - Please specify	**SM** Side mount	**3RNW** Three rings	**BLS** Black Gloss Smooth	
	YM3 Yoke mount, 3" OD		**DBT** Dark Bronze Matte Textured	
	YM4 Yoke mount, 4" OD		**DBS** Dark Bronze Gloss Smooth	
	YM5 Yoke mount, 5" OD		**GTT** Graphite Matte Textured	
			LGS Light Grey Gloss Smooth	
			PSS Platinum Silver Smooth	
			WHT White Matte Textured	
			WHS White Gloss Smooth	
			VGT Verde Green Textured	
			Color Option	
			CC Custom Color	

Notes:
1 26" only
2 To rotate optics left or right 90 degrees, specify L or R after the optical distribution example: 4L
3 When ordering Energeni, specify the routine setting code (Example GENI-04). See Energeni brochure and Energeni instructions for setting table and options. Not available with sensor options
4 This product is approved by the Florida Fish and Wildlife Conservation Commission. Separate spec available on our website.

© 2024 Current Lighting Solutions, LLC. All rights reserved. Information and specifications subject to change without notice. All values are design or typical values when measured under laboratory conditions.

BEACON
design . performance . technology

URBAN SERIES

URBAN LUMINAIRE

PENDANT MOUNT



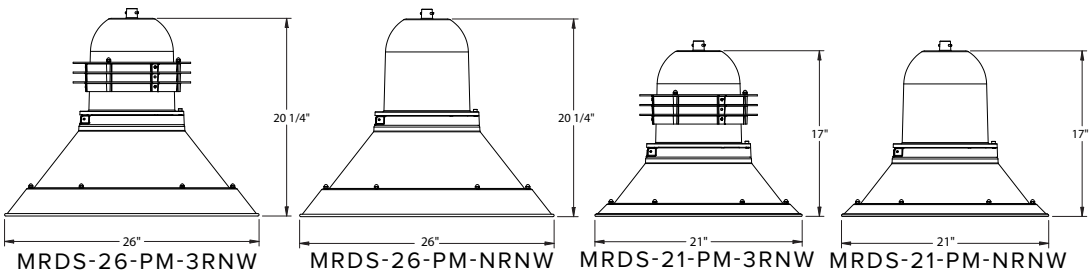

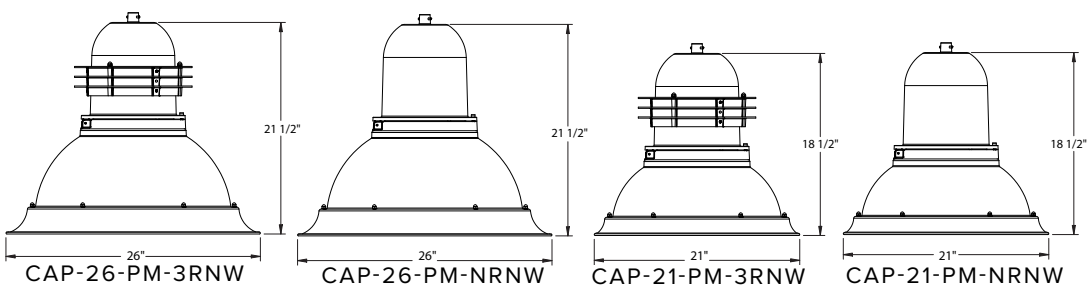

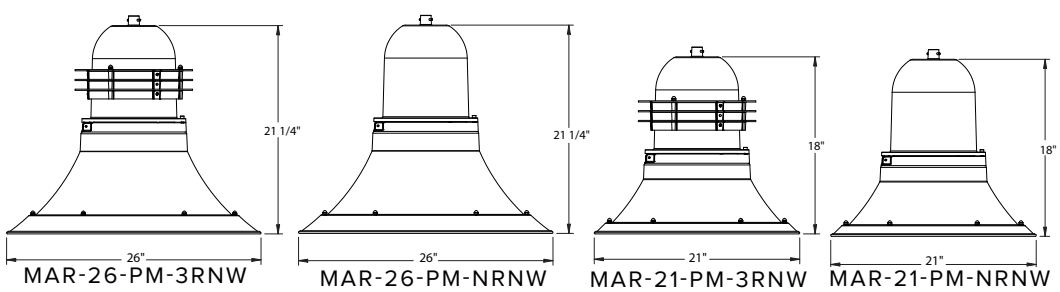

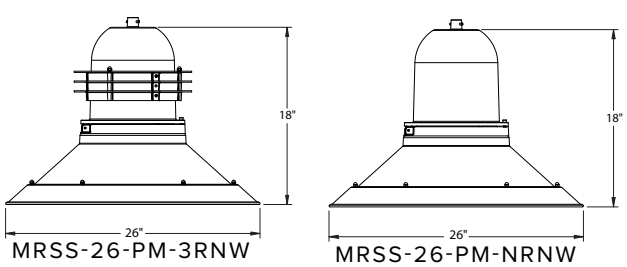

© 2024 Current Lighting Solutions, LLC. All rights reserved. Information and specifications subject to change without notice. All values are design or typical values when measured under laboratory conditions.

BEACON
design . performance . technology

URBAN SERIES

URBAN LUMINAIRE

SIDE MOUNT

* Arms ordered separately, arms mount over an open top pole, they do not mount to a tenon.



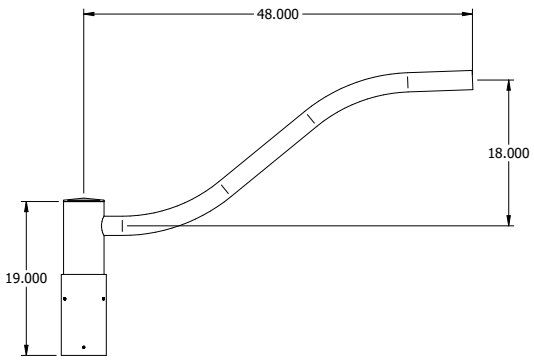

AA-10 COBRA

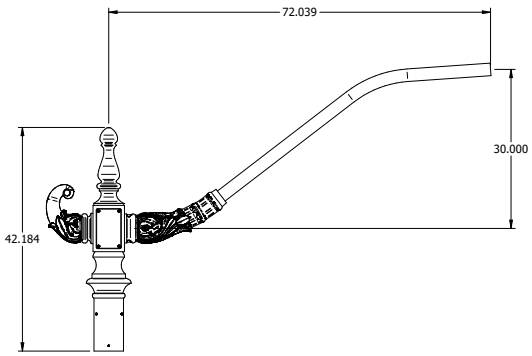

AA-10B COBRA BALBOA

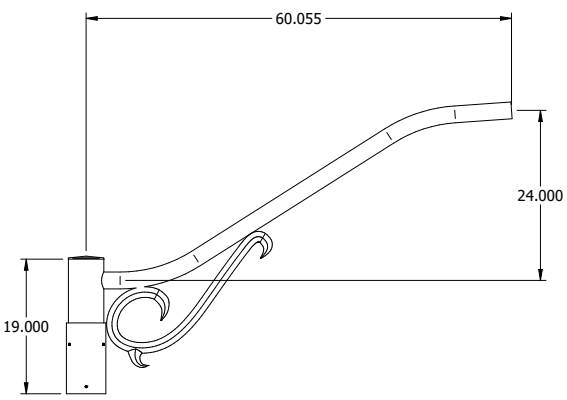

AA-10S COBRA SCROLL

© 2024 Current Lighting Solutions, LLC. All rights reserved. Information and specifications subject to change without notice. All values are design or typical values when measured under laboratory conditions.

BEACON
design . performance . technology

URBAN SERIES

URBAN LUMINAIRE

PENDANT MOUNT

* Arms ordered separately, arms mount over an open top pole, they do not mount to a tenon.



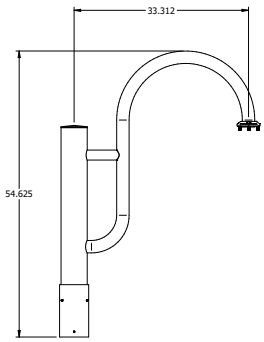

AA-41 RAILROAD STRAP

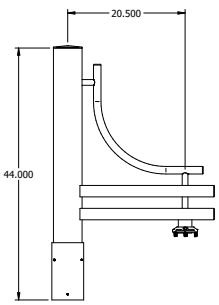

AA-10 SMALL PIERWALK

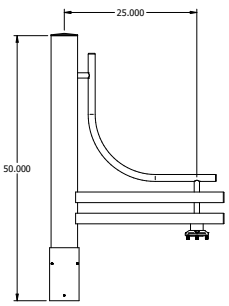

AA-38 LARGE PIERWALK

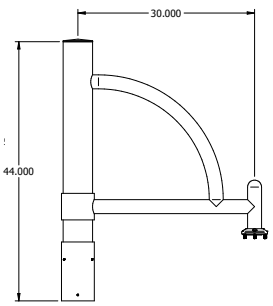

AA-49 RADIUS

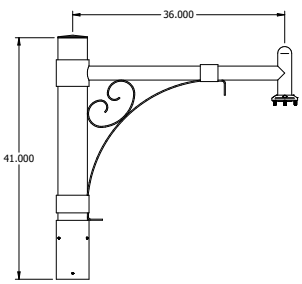

AA-27 STRATFORD

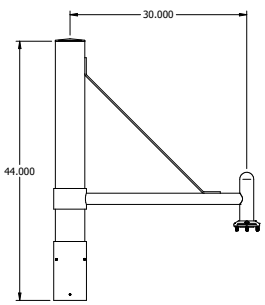

AA-44 STRUT

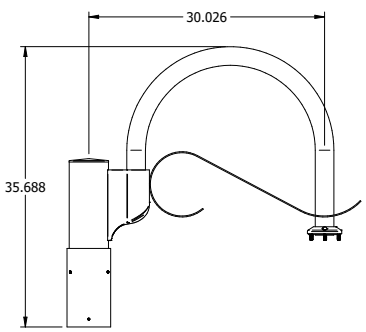

AA-45 TWIN EAGLES

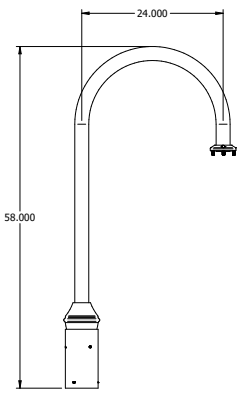

AA-39 RAILROAD

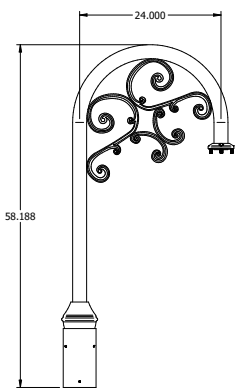

AA-39S RAILROAD SCROLL

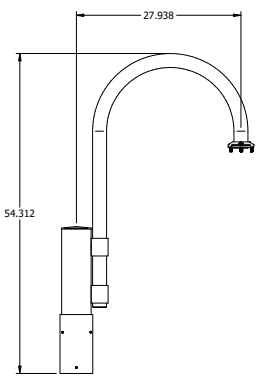

AA-42 RAILROAD SCS

© 2024 Current Lighting Solutions, LLC. All rights reserved. Information and specifications subject to change without notice. All values are design or typical values when measured under laboratory conditions.

BEACON
design . performance . technology

URBAN SERIES
URBAN LUMINAIRE

DELIVERED LUMENS

# of LEDs	NOMINAL WATTAGE (W)	SYSTEM WATTS (W)	DISTRIBUTION TYPE	5K7 (5000K nominal, 70 CRI)					4K7 (4000K nominal, 70 CRI)					3K7 (3000K nominal, 70 CRI)				
				LUMENS	LPW	B	U	G	LUMENS	LPW	B	U	G	LUMENS	LPW	B	U	G
18	25	27.8	FR	3428	123	0	0	0	3496	126	0	0	0	3233	116	0	0	0
			2	3236	117	1	0	1	3300	119	1	0	1	3052	110	1	0	1
			3	3164	114	1	0	1	3226	116	1	0	1	2983	107	1	0	1
			4F	3257	117	0	0	1	3321	120	0	0	1	3071	110	0	0	1
			4W	3114	112	1	0	1	3176	114	1	0	1	2937	106	1	0	1
			5QM	3398	122	2	0	0	3465	125	2	0	0	3204	115	2	0	0
			5QN	3431	124	2	0	0	3499	126	2	0	0	3236	116	2	0	0
			5QW	2937	106	2	0	1	2995	108	2	0	1	2770	100	0	0	0
			5RW	3150	113	2	0	2	3212	116	2	0	2	2970	107	2	0	2
			5W	3207	116	2	0	1	3271	118	2	0	1	3024	109	2	0	1
	39	45.1	FR	4977	110	0	0	0	5076	113	0	0	0	4694	104	0	0	0
			2	4699	104	1	0	1	4791	106	1	0	1	4431	98	1	0	1
			3	4593	102	1	0	1	4684	104	1	0	1	4332	96	1	0	1
			4F	4729	105	0	0	1	4822	107	0	0	1	4459	99	0	0	1
			4W	4522	100	1	0	1	4611	102	1	0	1	4264	95	1	0	1
			5QM	4934	110	2	0	0	5032	112	2	0	0	4653	103	2	0	0
			5QN	4982	111	2	0	0	5081	113	2	0	0	4698	104	2	0	0
			5QW	4522	100	3	0	1	4611	102	3	0	1	4264	95	3	0	1
			5RW	4573	101	2	0	2	4664	104	2	0	2	4313	96	2	0	2
			5W	4657	103	2	0	1	4749	105	2	0	1	4391	97	2	0	1
	50	57.5	FR	6019	105	0	0	0	6138	107	0	0	0	5676	99	0	0	0
			2	5682	99	1	0	1	5794	101	1	0	1	5358	93	1	0	1
			3	5555	97	1	0	1	5665	99	1	0	1	5238	91	1	0	1
			4F	5718	100	0	0	1	5831	101	0	0	1	5392	94	0	0	1
			4W	5468	95	1	0	1	5576	97	1	0	1	5156	90	1	0	1
			5QM	5967	104	2	0	0	6085	106	2	0	0	5627	98	2	0	0
			5QN	6025	105	2	0	0	6144	107	2	0	0	5682	99	2	0	0
			5QW	5468	95	3	0	1	5576	97	3	0	1	5156	90	3	0	1
			5RW	5531	96	2	0	2	5640	98	2	0	2	5215	91	2	0	2
			5W	5632	98	2	0	1	5743	100	2	0	1	5311	92	2	0	1
	70	62.4	FR	6650	107	0	0	0	6781	109	0	0	0	6271	100	0	0	0
			2	6277	101	1	0	1	6401	103	1	0	1	5919	95	1	0	1
			3	6137	98	1	0	1	6258	100	1	0	1	5787	93	1	0	1
			4F	6317	101	0	0	1	6442	103	0	0	1	5957	95	0	0	1
			4W	6041	97	1	0	1	6160	99	1	0	1	5696	91	1	0	1
			5QM	6592	106	2	0	0	6722	108	2	0	0	6216	100	2	0	0
			5QN	6656	107	2	0	0	6788	109	2	0	0	6277	101	2	0	0
			5QW	6041	97	3	0	1	6160	99	3	0	1	5696	91	3	0	1
			5RW	6110	98	2	0	2	6231	100	2	0	2	5762	92	2	0	2
			5W	6221	100	2	0	1	6344	102	2	0	1	5867	94	2	0	1

DELIVERED LUMENS CHART CONTINUED ONTO NEXT PAGE

Notes:

1 Lumen values are from photometric tests performed in accordance with IESNA LM-79-08. Data is considered to be representative of the configurations shown. Actual performance may differ as a result of end-user environment and application.

* Available in the 26" Urban only

© 2024 Current Lighting Solutions, LLC. All rights reserved. Information and specifications subject to change without notice. All values are design or typical values when measured under laboratory conditions.

BEACON
design . performance . technology

URBAN SERIES
URBAN LUMINAIRE

DELIVERED LUMENS (CONTINUED)

				5K7 (5000K nominal, 70 CRI)					4K7 (4000K nominal, 70 CRI)					3K7 (3000K nominal, 70 CRI)				
# of LEDs	NOMINAL WATTAGE (W)	SYSTEM WATTS (W)	DISTRIBUTION TYPE	LUMENS	LPW	B	U	G	LUMENS	LPW	B	U	G	LUMENS	LPW	B	U	G
18	90	82.3	FR	7681	93	0	0	0	7833	95	0	0	0	7244	88	0	0	0
			2	7251	88	1	0	1	7394	90	1	0	1	6838	83	1	0	1
			3	7089	86	1	0	1	7229	88	1	0	1	6685	81	1	0	1
			4F	7297	89	0	0	1	7442	90	0	0	1	6882	84	0	0	1
			4W	6978	85	1	0	1	7116	86	1	0	1	6580	80	1	0	1
			5QM	7614	93	2	0	0	7765	94	2	0	0	7180	87	2	0	0
			5QN	7689	93	2	0	0	7841	95	2	0	0	7251	88	2	0	0
			5QW	6978	85	3	0	1	7116	86	3	0	1	6580	80	3	0	1
			5RW	7058	86	2	0	2	7197	87	2	0	2	6656	81	2	0	2
			5W	7187	87	2	0	1	7329	89	2	0	1	6777	82	2	0	1
	110	98.7	FR	8346	85	0	0	0	8511	86	0	0	0	7870	80	0	0	0
			2	7878	80	1	0	1	8034	81	1	0	1	7429	75	1	0	1
			3	7702	78	1	0	1	7854	80	1	0	1	7263	74	1	0	1
			4F	7929	80	0	0	1	8085	82	0	0	1	7477	76	0	0	1
			4W	7582	77	1	0	1	7731	78	1	0	1	7150	72	1	0	1
			5QM	8273	84	2	0	0	8437	86	2	0	0	7802	79	2	0	0
			5QN	8354	85	2	0	0	8519	86	2	0	0	7878	80	2	0	0
			5QW	7582	77	3	0	2	7731	78	3	0	2	7150	72	3	0	2
			5RW	7668	78	2	0	2	7820	79	2	0	2	7231	73	2	0	2
			5W	7808	79	2	0	1	7963	81	2	0	1	7363	75	2	0	1
36	120	124.9	FR	12463	100	0	0	0	12709	102	0	0	0	11752	94	0	0	0
			2	11765	94	1	0	1	11997	96	1	0	1	11094	89	1	0	1
			3	11501	92	1	0	1	11728	94	1	0	1	10846	87	1	0	1
			4F	11840	95	0	0	1	12074	97	0	0	1	11165	89	0	0	1
			4W	11321	91	1	0	1	11545	92	1	0	1	10676	85	1	0	1
			5QM	12354	99	2	0	0	12598	101	2	0	0	11650	93	2	0	0
			5QN	12475	100	2	0	0	12722	102	2	0	0	11764	94	2	0	0
			5QW	11321	91	3	0	2	11545	92	3	0	2	10676	85	3	0	2
			5RW	11451	92	2	0	2	11677	93	2	0	2	10798	86	2	0	2
			5W	11660	93	2	0	1	11890	95	2	0	1	10995	88	2	0	1
	135	137.5	FR	13255	96	0	0	0	13517	98	0	0	0	12500	91	0	0	0
			2	12513	91	1	0	1	12760	93	1	0	1	11799	86	1	0	1
			3	12232	89	1	0	1	12474	91	1	0	1	11535	84	1	0	1
			4F	12593	92	0	0	1	12841	93	0	0	1	11875	86	0	0	1
			4W	12041	88	1	0	1	12279	89	1	0	1	11355	83	1	0	1
			5QM	13140	96	2	0	0	13399	97	2	0	0	12391	90	2	0	0
			5QN	13268	97	2	0	0	13531	98	2	0	0	12512	91	2	0	0
			5QW	12041	88	3	0	2	12279	89	3	0	2	11355	83	3	0	2
			5RW	12179	89	2	0	2	12420	90	2	0	2	11485	84	2	0	2
			5W	12401	90	2	0	1	12646	92	2	0	1	11695	85	2	0	1
			TCR	13051	95	0	0	0	13308	97	0	0	0	12307	90	0	0	0

DELIVERED LUMENS CHART CONTINUED ONTO NEXT PAGE

Notes:

1 Lumen values are from photometric tests performed in accordance with IESNA LM-79-08. Data is considered to be representative of the configurations shown. Actual performance may differ as a result of end-user environment and application.

* Available in the 26" Urban only

© 2024 Current Lighting Solutions, LLC. All rights reserved. Information and specifications subject to change without notice. All values are design or typical values when measured under laboratory conditions.

BEACON
design . performance . technology

URBAN SERIES
URBAN LUMINAIRE

DELIVERED LUMENS (CONTINUED)

				5K7 (5000K nominal, 70 CRI)					4K7 (4000K nominal, 70 CRI)					3K7 (3000K nominal, 70 CRI)				
# of LEDs	NOMINAL WATTAGE (W)	SYSTEM WATTS (W)	DISTRIBUTION TYPE	LUMENS	LPW	B	U	G	LUMENS	LPW	B	U	G	LUMENS	LPW	B	U	G
36	155	150.6	FR	13992	93	0	0	0	14268	95	0	0	0	13194	88	0	0	0
			2	13208	88	1	0	1	13469	89	1	0	1	12455	83	1	0	1
			3	12912	86	1	0	1	13167	87	1	0	1	12176	81	1	0	1
			4F	13293	88	0	0	1	13555	90	0	0	1	12535	83	0	0	1
			4W	12711	84	1	0	1	12962	86	1	0	1	11986	80	1	0	1
			5QM	13870	92	2	0	0	14144	94	2	0	0	13079	87	2	0	0
			5QN	14006	93	2	0	0	14283	95	2	0	0	13208	88	2	0	0
			5QW	12711	84	3	0	2	12962	86	3	0	2	11986	80	3	0	2
			5RW	12856	85	2	0	2	13110	87	2	0	2	12123	80	2	0	2
			5W	13091	87	2	0	1	13349	89	2	0	1	12345	82	2	0	1
	175	167.3	FR	14784	88	0	0	0	15076	90	0	0	0	13942	83	0	0	0
			2	13956	83	1	0	1	14232	85	1	0	1	13161	79	1	0	1
			3	13644	82	1	0	1	13913	83	1	0	1	12866	77	1	0	1
			4F	14045	84	0	0	1	14323	86	0	0	1	13245	79	0	0	1
			4W	13430	80	1	0	1	13696	82	1	0	1	12665	76	1	0	1
			5QM	14655	88	2	0	0	14945	89	2	0	0	13820	83	2	0	0
			5QN	14799	88	2	0	0	15091	90	2	0	0	13956	83	2	0	0
			5QW	13430	80	3	0	2	13696	82	3	0	2	12665	76	3	0	2
			5RW	13584	81	2	0	2	13852	83	2	0	2	12810	77	2	0	2
			5W	13832	83	2	0	1	14105	84	2	0	1	13044	78	2	0	1

Notes:

1 Lumen values are from photometric tests performed in accordance with IESNA LM-79-08. Data is considered to be representative of the configurations shown. Actual performance may differ as a result of end-user environment and application.

* Available in the 26" Urban only

ELECTRICAL DATA

# LED's	Nominal Wattage (W)	Input Voltage (Volts)	Oper. Current (Amps)	System Power (W)
18	25	120	0.23	27.8
		277	0.10	
		347	0.08	
		480	0.06	
	39	120	0.38	45.1
		277	0.16	
		347	0.13	
		480	0.09	
	50	120	0.48	57.7
		277	0.21	
		347	0.17	
		480	0.12	
	70	120	0.52	62.4
		277	0.23	
		347	0.18	
		480	0.13	
	90	120	0.69	82.3
		277	0.30	
		347	0.24	
		480	0.17	
	110	120	0.82	98.7
		277	0.36	
		347	0.28	
		480	0.21	

# LED's	Nominal Wattage (W)	Input Voltage (Volts)	Oper. Current (Amps)	System Power (W)
36	120	120	1.04	124.9
		277	0.45	
		347	0.36	
		480	0.26	
	135	120	1.15	137.5
		277	0.50	
		347	0.40	
		480	0.29	
	155	120	1.26	150.6
		277	0.54	
		347	0.43	
		480	0.31	
	175	120	1.39	167.3
		277	0.60	
		347	0.48	
		480	0.35	

© 2024 Current Lighting Solutions, LLC. All rights reserved. Information and specifications subject to change without notice. All values are design or typical values when measured under laboratory conditions.

BEACON
design . performance . technology

URBAN SERIES

URBAN LUMINAIRE

PROJECTED LUMEN MAINTENANCE

Ambient Temperature	OPERATING HOURS					
	0	25,000	*TM-21-11 36,000	50,000	100,000	L70 (Hours)
25°C / 77°F	1.00	0.97	0.96	0.95	0.91	408,000
40°C / 104°F	0.99	0.96	0.95	0.94	0.89	356,000

Notes:

* Projected per IESNA TM-21-11. Data references the extrapolated performance projections for thebase model in a 40°C ambient, based on 10,000 hours of LED testing per IESNA LM-80-08.

LUMINAIRE AMBIENT TEMPERATURE FACTOR (LATF)

Ambient Temperature		Lumen Multiplier
0°C	32°F	1.03
10°C	50°F	1.01
20°C	68°F	1.00
25°C	77°F	1.00
30°C	86°F	0.99
40°C	104°F	0.98
50°C	122°F	0.97

Use these factors to determine relative lumen output for average ambient temperatures from 0-40°C (32-104°F).

EPA

EPA: X.XX sqft		PM	SM	YM
CAP	21	1.04	1.14	1.39
	26	1.39	1.49	1.79
MAR	21	1.00	1.10	1.35
	26	1.25	1.35	1.65
MRDS	21	1.00	1.10	1.35
	26	1.25	1.35	1.65
MRSS	26	1.17	1.27	1.57

FOR ALL CONFIGURATIONS LINE DRAWINGS PLEASE SEE:

URB-HD-P.PDF
URB-HD-S.PDF
URB-HD-YM.PDF

© 2024 Current Lighting Solutions, LLC. All rights reserved. Information and specifications subject to change without notice. All values are design or typical values when measured under laboratory conditions.

BEACON design . performance . technology

DATE: LOCATION:

TYPE: PROJECT:

CATALOG #:

RSA-B-KENS Series Poles

ROUND STRAIGHT ALUMINUM

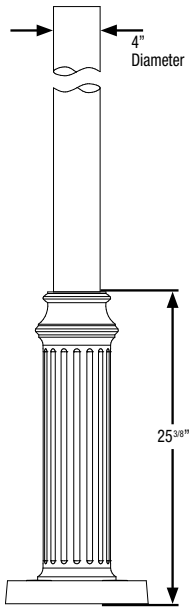

APPLICATIONS

- Lighting installations for side and top mounting of luminaires with effective projected area (EPA) not exceeding maximum allowable loading of the specified pole in its installed geographic location

CONSTRUCTION

- SHAFT: One-piece straight aluminum with fluted or smooth cross section; Extruded shafts of 6061-T6 aluminum in 1/8", 3/16", or 1/4" thickness. Decorative base of 356 cast aluminum.
- POLE CAP OR FINALS: Cap or decorative finials available for side mounted luminaires. Open top or tenons provided for post top mounted luminaires.
- HAND HOLE: Hand hole provided in cast base; Mounting provisions for grounding lug located behind cover
- ANCHOR BOLTS: Four galvanized anchor bolts provided per pole with minimum yield of 55,000 psi (ASTM F1554). Galvanized hardware with two washers and two nuts per bolt for leveling

FINISH

- Durable thermoset polyester powder coat paint finish with nominal 3.0 mil thickness
- Powder paint finish coat available in twelve standard colors; Custom colors available; RAL number preferable.

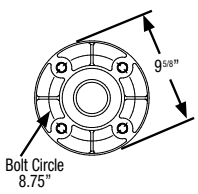

TENONS & POLE CAPS

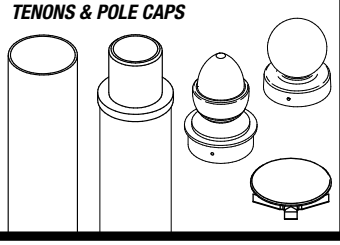

BASE DETAIL

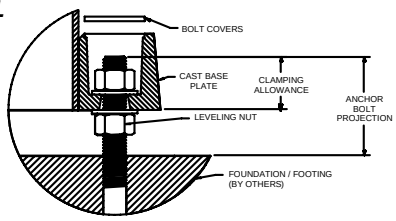

ORDERING EXAMPLE:

RSA-B-KENS - S/F - 16 - 40 - A/B/C - 2L - B3 - DBT - VM2

SERIES	STYLE	HEIGHT	SHAFT	THICKNESS
RSA-B-KENS Round Straight Aluminum Pole Beacon	**S** Smooth **F** Fluted	Reference page 2 Ordering matrix **12'**	Reference page 2 Ordering matrix **40**	Reference page 2 Ordering matrix **B**

MOUNTING ORIENTATION

Denotes handhole location

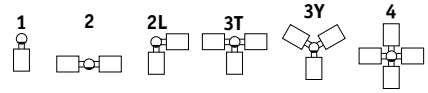

MOUNTING
1 Single arm mount
2 Two fixtures at 180˚
2L Two fixtures at 90˚
3T Three fixtures at 90˚
3Y Three at 120˚
4 Four fixtures at 90˚
OT Open top (includes pole cap)
TN3 Tenon 3 x 3
TN4 Tenon 3 x 4
CAP Cap
ARC Acorn Finial
BAL Ball Finial

FINISH
BLT Black Matte Textured
BLS Black Gloss Smooth
DBT Dark Bronze Matte Textured
DBS Dark Bronze Gloss Smooth
GTT Graphite Matte Textured
LGS Light Grey Gloss Smooth
PSS Platinum Silver Smooth
WHT White Matte Textured
WHS White Gloss Smooth
VGT Verde Green Textured

Color Option
CC Custom Color

OPTIONS	
GFI'	20 Amp GFCI Receptacle and Cover
EHH'	Extra Handhole
C05'	.5" Coupling
C07'	.75" Coupling
C20'	2" Coupling
VM2	2nd mode vibration damper
LAB	Less Anchor Bolts

DRILL PATTERN
B1 Cruzer, "AM" arm
B3 2 bolt (2-½" spacing), Viper "A" arm
S2 2 bolt (3-½" spacing), Viper "AD" arm

1 Specify option location using logic found on page 2 **(Option Orientation)**

***ACCESSORIES*- Order Separately**

Catalog Number	Description
VM2SXX	2nd mode vibration damper

© 2023 HLI Solutions, Inc. All rights reserved. Information and specifications subject to change without notice. All values are design or typical values when measured under laboratory conditions.

BEACON
design . performance . technology

DATE: LOCATION:

TYPE: PROJECT:

CATALOG #:

RSA-B-KENS Series Poles

ROUND STRAIGHT ALUMINUM

ORDERING INFORMATION Cont.

Catalog Number	Height		Nominal Shaft Dimensions	Wall Thickness	Bolt Circle (suggested)	Bolt Square	Base Plate Size	Anchor Bolt Size	Bolt Projection	Pole weight (lbs)
	Feet	Meters								
RSA-B-KENS-S-10-40-A	10	3.0	4" Round	0.125"	8-3/4"	6.19"	11-5/8" x 25-3/8" Tall	3/4 x 30 x 3	2-3/4"	39
RSA-B-KENS-S-12-40-A	12	3.7	4" Round	0.125"	8-3/4"	6.19"	11-5/8" x 25-3/8" Tall	3/4 x 30 x 3	2-3/4"	43
RSA-B-KENS-S-14-40-A	14	4.3	4" Round	0.125"	8-3/4"	6.19"	11-5/8" x 25-3/8" Tall	3/4 x 30 x 3	2-3/4"	46
RSA-B-KENS-S-16-40-A	16	4.9	4" Round	0.125"	8-3/4"	6.19"	11-5/8" x 25-3/8" Tall	3/4 x 30 x 3	2-3/4"	50
RSA-B-KENS-S-18-40-A	18	5.5	4" Round	0.125"	8-3/4"	6.19"	11-5/8" x 25-3/8" Tall	3/4 x 30 x 3	2-3/4"	53
RSA-B-KENS-S-20-40-A	20	6.1	4" Round	0.125"	8-3/4"	6.19"	11-5/8" x 25-3/8" Tall	3/4 x 30 x 3	2-3/4"	57
RSA-B-KENS-S-10-40-B	10	3.0	4" Round	0.188"	8-3/4"	6.19"	11-5/8" x 25-3/8" Tall	3/4 x 30 x 3	2-3/4"	47
RSA-B-KENS-S-12-40-B	12	3.7	4" Round	0.188"	8-3/4"	6.19"	11-5/8" x 25-3/8" Tall	3/4 x 30 x 3	2-3/4"	53
RSA-B-KENS-S-14-40-B	14	4.3	4" Round	0.188"	8-3/4"	6.19"	11-5/8" x 25-3/8" Tall	3/4 x 30 x 3	2-3/4"	58
RSA-B-KENS-S-16-40-B	16	4.9	4" Round	0.188"	8-3/4"	6.19"	11-5/8" x 25-3/8" Tall	3/4 x 30 x 3	2-3/4"	63
RSA-B-KENS-S-18-40-B	18	5.5	4" Round	0.188"	8-3/4"	6.19"	11-5/8" x 25-3/8" Tall	3/4 x 30 x 3	2-3/4"	69
RSA-B-KENS-S-20-40-B	20	6.1	4" Round	0.188"	8-3/4"	6.19"	11-5/8" x 25-3/8" Tall	3/4 x 30 x 3	2-3/4"	74
RSA-B-KENS-S-22-40-B	22	6.7	4" Round	0.188"	8-3/4"	6.19"	11-5/8" x 25-3/8" Tall	3/4 x 30 x 3	2-3/4"	79
RSA-B-KENS-S-24-40-B	24	7.3	4" Round	0.188"	8-3/4"	6.19"	11-5/8" x 25-3/8" Tall	3/4 x 30 x 3	2-3/4"	84
RSA-B-KENS-S-10-40-C	10	3.0	4" Round	0.25"	8-3/4"	6.19"	11-5/8" x 25-3/8" Tall	3/4 x 30 x 3	2-3/4"	56
RSA-B-KENS-S-12-40-C	12	3.7	4" Round	0.25"	8-3/4"	6.19"	11-5/8" x 25-3/8" Tall	3/4 x 30 x 3	2-3/4"	62
RSA-B-KENS-S-14-40-C	14	4.3	4" Round	0.25"	8-3/4"	6.19"	11-5/8" x 25-3/8" Tall	3/4 x 30 x 3	2-3/4"	69
RSA-B-KENS-S-16-40-C	16	4.9	4" Round	0.25"	8-3/4"	6.19"	11-5/8" x 25-3/8" Tall	3/4 x 30 x 3	2-3/4"	76
RSA-B-KENS-S-18-40-C	18	5.5	4" Round	0.25"	8-3/4"	6.19"	11-5/8" x 25-3/8" Tall	3/4 x 30 x 3	2-3/4"	83
RSA-B-KENS-S-20-40-C	20	6.1	4" Round	0.25"	8-3/4"	6.19"	11-5/8" x 25-3/8" Tall	3/4 x 30 x 3	2-3/4"	90
RSA-B-KENS-S-22-40-C	22	6.7	4" Round	0.25"	8-3/4"	6.19"	11-5/8" x 25-3/8" Tall	3/4 x 30 x 3	2-3/4"	97
RSA-B-KENS-S-24-40-C	24	7.3	4" Round	0.25"	8-3/4"	6.19"	11-5/8" x 25-3/8" Tall	3/4 x 30 x 3	2-3/4"	104
RSA-B-KENS-F-10-40-B	10	3.0	4" Fluted	0.188"	8-3/4"	6.19"	11-5/8" x 25-3/8" Tall	3/4 x 30 x 3	2-3/4"	50
RSA-B-KENS-F-12-40-B	12	3.7	4" Fluted	0.188"	8-3/4"	6.19"	11-5/8" x 25-3/8" Tall	3/4 x 30 x 3	2-3/4"	55
RSA-B-KENS-F-14-40-B	14	4.3	4" Fluted	0.188"	8-3/4"	6.19"	11-5/8" x 25-3/8" Tall	3/4 x 30 x 3	2-3/4"	61
RSA-B-KENS-F-16-40-B	16	4.9	4" Fluted	0.188"	8-3/4"	6.19"	11-5/8" x 25-3/8" Tall	3/4 x 30 x 3	2-3/4"	67
RSA-B-KENS-F-18-40-B	18	5.5	4" Fluted	0.188"	8-3/4"	6.19"	11-5/8" x 25-3/8" Tall	3/4 x 30 x 3	2-3/4"	72
RSA-B-KENS-F-20-40-B	20	6.1	4" Fluted	0.188"	8-3/4"	6.19"	11-5/8" x 25-3/8" Tall	3/4 x 30 x 3	2-3/4"	78
RSA-B-KENS-F-22-40-B	22	6.7	4" Fluted	0.188"	8-3/4"	6.19"	11-5/8" x 25-3/8" Tall	3/4 x 30 x 3	2-3/4"	84
RSA-B-KENS-F-24-40-B	24	7.3	4" Fluted	0.188"	8-3/4"	6.19"	11-5/8" x 25-3/8" Tall	3/4 x 30 x 3	2-3/4"	90

NOTE Factory supplied template must be used when setting anchor bolts. Current will deny any claim for incorrect anchorage placement resulting from failure to use factory supplied template and anchor bolts.

EHH - EXTRA HANDHOLE

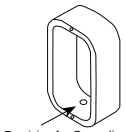

C05 - C07 - C20 - COUPLING

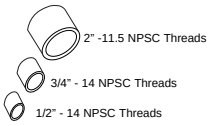

VM2 - VIBRATION DAMPER 2ND MODE

Factory installed, internal damper designed to alter pole resonance to reduce movement and material fatigue caused by 2nd mode vibration.



GFI – 20 AMP GFCI RECEPTACLE & COVER

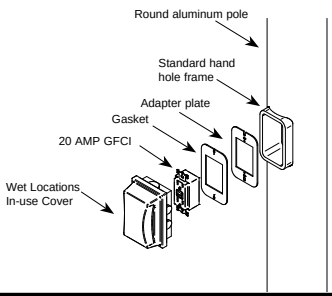

OPTION ORIENTATION

Follow the logic below when ordering location specific options. For each option, include its orientation (in degrees) and its height (in feet). Example: Option C07 should be ordered as: **RSA-B-KENS-F16-40B-TN3-DBT-C05-0-5** (.5" coupling on the handhole/arm side of pole, 15 feet up from the pole base) 1' spacing required between option. Consult factory for other configurations.

VM2SXX - VIBRATION DAMPER 2ND MODE

Field installed, internal damper designed to alter pole resonance to reduce movement and material fatigue caused by 2nd mode vibration.



VM2S08 – 8'
VM2S12 – 12'
VM2S16 – 16'
VM2S20 – 20'
VM2S24 – 24'

For more information about pole vibration and vibration dampers, please consult Pole Vibration Application Guide.
Due to our continued efforts to improve our products, product specifications are subject to change without notice.

© 2023 HLI Solutions, Inc. All rights reserved. Information and specifications subject to change without notice. All values are design or typical values when measured under laboratory conditions.

BEACON
design . performance . technology

DATE: LOCATION:

TYPE: PROJECT:

CATALOG #:

RSA-B-KENS Series Poles

ROUND STRAIGHT ALUMINUM

ASCE7-05 WIND MAP

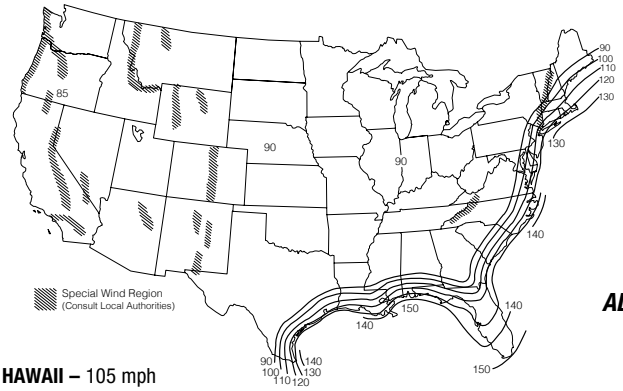

HAWAII – 105 mph
PUERTO RICO – 145 mph

***PRINTED WITH PERMISSION FROM ASCE**

FLORIDA REGION WIND MAP

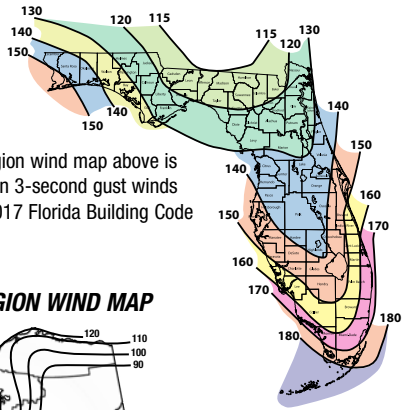

Florida region wind map above is based upon 3-second gust winds and the 2017 Florida Building Code

ALASKA REGION WIND MAP

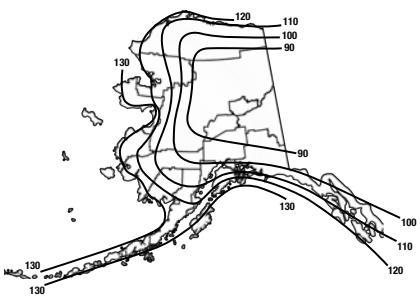

ASCE 7-05 wind map EPA Load Rating - 3 second gust wind speeds										
Catalog Number	**85**	**90**	**100**	**105**	**110**	**120**	**130**	**140**	**145**	**150**
RSA-B-KENS-S-10-40-A	12.2	10.8	8.7	7.8	7.0	5.8	4.9	4.2	3.9	3.6
RSA-B-KENS-S-12-40-A	9.0	7.9	6.2	5.5	4.9	3.9	3.3	2.8	2.6	2.4
RSA-B-KENS-S-14-40-A	6.8	5.9	4.5	3.9	3.4	2.6	2.2	1.8	1.6	1.5
RSA-B-KENS-S-16-40-A	5.1	4.4	3.2	2.7	2.3	1.6	1.3	1.0	0.9	0.8
RSA-B-KENS-S-18-40-A	3.8	3.1	2.1	1.7	1.3	0.8	0.5	NR	NR	NR
RSA-B-KENS-S-20-40-A	2.6	2.1	1.2	0.8	0.5	NR	NR	NR	NR	NR
RSA-B-KENS-S-10-40-B	18.0	16.1	13.0	11.8	10.6	8.9	7.5	6.5	6.0	5.6
RSA-B-KENS-S-12-40-B	13.6	12.1	9.7	8.7	7.8	6.4	5.4	4.6	4.3	4.0
RSA-B-KENS-S-14-40-B	10.6	9.3	7.3	6.5	5.8	4.7	3.9	3.3	3.0	2.8
RSA-B-KENS-S-16-40-B	8.3	7.3	5.6	4.9	4.3	3.3	2.7	2.3	2.1	1.9
RSA-B-KENS-S-18-40-B	6.5	5.6	4.1	3.5	3.0	2.2	1.8	1.4	1.3	1.2
RSA-B-KENS-S-20-40-B	5.0	4.2	2.9	2.4	2.0	1.3	1.0	0.7	0.6	0.5
RSA-B-KENS-S-22-40-B	3.7	3.0	1.9	1.5	1.1	0.5	NR	NR	NR	NR
RSA-B-KENS-S-24-40-B	2.7	2.1	1.1	0.7	NR	NR	NR	NR	NR	NR
RSA-B-KENS-S-10-40-C	23.3	20.8	16.9	15.3	13.9	11.6	9.9	8.5	7.9	7.4
RSA-B-KENS-S-12-40-C	17.7	15.8	12.7	11.5	10.4	8.6	7.3	6.2	5.8	5.4
RSA-B-KENS-S-14-40-C	14.0	12.4	9.8	8.8	7.9	6.5	5.4	4.6	4.3	4.0
RSA-B-KENS-S-16-40-C	11.2	9.9	7.7	6.8	6.1	4.8	4.1	3.4	3.1	2.9
RSA-B-KENS-S-18-40-C	8.9	7.8	5.9	5.2	4.5	3.5	2.9	2.4	2.2	2.0
RSA-B-KENS-S-20-40-C	7.0	6.1	4.5	3.8	3.3	2.4	1.9	1.5	1.4	1.2
RSA-B-KENS-S-22-40-C	5.5	4.7	3.3	2.7	2.2	1.5	1.1	0.8	0.7	0.6
RSA-B-KENS-S-24-40-C	4.3	3.5	2.3	1.8	1.3	0.7	NR	NR	NR	NR
RSA-B-KENS-F-10-40-B	17.9	16.0	12.9	11.6	10.5	8.7	7.2	6.1	5.6	5.1
RSA-B-KENS-F-12-40-B	13.5	12.0	9.5	8.5	7.6	6.2	5.0	4.1	3.7	3.3
RSA-B-KENS-F-14-40-B	10.4	9.2	7.2	6.3	5.6	4.4	3.5	2.7	2.4	2.1
RSA-B-KENS-F-16-40-B	8.1	7.1	5.4	4.7	4.1	3.0	2.2	1.6	1.3	1.0
RSA-B-KENS-F-18-40-B	6.3	5.4	3.9	3.3	2.8	1.9	1.2	0.6	NR	NR
RSA-B-KENS-F-20-40-B	4.7	3.9	2.7	2.2	1.7	0.9	NR	NR	NR	NR
RSA-B-KENS-F-22-40-B	3.4	2.8	1.6	1.2	0.8	NR	NR	NR	NR	NR
RSA-B-KENS-F-24-40-B	2.4	1.8	0.8	NR	NR	NR	NR	NR	NR	NR

Florida Building Code 2017 EPA Load Rating - 3 second gust wind speeds								
Catalog Number	**115**	**120**	**130**	**140**	**150**	**160**	**170**	**180**
RSA-10-40-A-S-KENS	9.0	8.2	6.9	5.8	4.9	4.1	3.8	3.6
RSA-12-40-A-S-KENS	6.5	5.8	4.8	3.9	3.2	2.6	2.5	2.4
RSA-14-40-A-S-KENS	4.7	4.1	3.2	2.5	1.9	1.4	1.2	1.1
RSA-16-40-A-S-KENS	3.2	2.8	2.0	1.4	0.9	0.5	NR	NR
RSA-18-40-A-S-KENS	2.1	1.7	1.0	0.5	NR	NR	NR	NR
RSA-20-40-A-S-KENS	1.1	0.8	NR	NR	NR	NR	NR	NR
RSA-10-40-B-S-KENS	13.6	12.4	10.5	8.9	7.6	6.6	6.3	5.5
RSA-12-40-B-S-KENS	10.1	9.2	7.6	6.4	5.4	4.5	4.3	4.0
RSA-14-40-B-S-KENS	7.6	6.9	5.6	4.6	3.7	3.0	2.9	2.7
RSA-16-40-B-S-KENS	5.7	5.1	4.0	3.2	2.4	1.8	1.6	1.4
RSA-18-40-B-S-KENS	4.2	3.6	2.7	2.0	1.4	0.8	0.6	NR
RSA-20-40-B-S-KENS	2.9	2.4	1.6	1.0	0.5	NR	NR	NR
RSA-22-40-B-S-KENS	1.9	1.4	0.7	NR	NR	NR	NR	NR
RSA-24-40-B-S-KENS	0.9	0.6	NR	NR	NR	NR	NR	NR
RSA-10-40-C-S-KENS	17.6	16.2	13.7	11.7	10.1	8.8	8.2	7.3
RSA-12-40-C-S-KENS	13.3	12.1	10.2	8.6	7.3	6.2	5.8	5.4
RSA-14-40-C-S-KENS	10.3	9.3	7.7	6.4	5.3	4.5	4.3	4.0
RSA-16-40-C-S-KENS	7.9	7.1	5.8	4.7	3.8	3.0	2.7	2.5
RSA-18-40-C-S-KENS	6.0	5.4	4.2	3.3	2.5	1.9	1.7	1.5
RSA-20-40-C-S-KENS	4.5	3.9	2.9	2.1	1.4	0.9	0.7	0.5
RSA-22-40-C-S-KENS	3.2	2.7	1.9	1.1	0.5	NR	NR	NR
RSA-24-40-C-S-KENS	2.2	1.7	0.9	NR	NR	NR	NR	NR
RSA-10-40-B-F-KENS	13.6	12.4	10.5	8.9	7.6	6.6	5.7	4.9
RSA-12-40-B-F-KENS	10.1	9.2	7.6	6.4	5.4	4.5	3.8	3.2
RSA-14-40-B-F-KENS	7.6	6.9	5.6	4.6	3.7	3.0	2.4	1.9
RSA-16-40-B-F-KENS	5.7	5.1	4.0	3.2	2.4	1.8	1.3	0.9
RSA-18-40-B-F-KENS	4.2	3.6	2.7	2.0	1.4	0.8	NR	NR
RSA-20-40-B-F-KENS	2.9	2.4	1.6	1.0	0.5	NR	NR	NR
RSA-22-40-B-F-KENS	1.9	1.4	0.7	NR	NR	NR	NR	NR
RSA-24-40-B-F-KENS	0.9	0.6	NR	NR	NR	NR	NR	NR

© 2023 HLI Solutions, Inc. All rights reserved. Information and specifications subject to change without notice. All values are design or typical values when measured under laboratory conditions.

BEACON
design . performance . technology

DATE: LOCATION:

TYPE: PROJECT:

CATALOG #:

RSA-B-KENS Series Poles

ROUND STRAIGHT ALUMINUM

NOTES

Wind-speed Website disclaimer:
Current has no connection to the linked website and makes no representations as to its accuracy. While the information presented on this third-party website provides a useful starting point for analyzing wind conditions, Current has not verified any of the information on this third party website and assumes no responsibility or liability for its accuracy. The material presented in the windspeed website should not be used or relied upon for any specific application without competent examination and verification of its accuracy, suitability and applicability by engineers or other licensed professionals. Current does not intend that the use of this information replace the sound judgment of such competent professionals, having experience and knowledge in the field of practice, nor to substitute for the standard of care required of such professionals in interpreting and applying the results of the windspeed report provided by this website. Users of the information from this third party website assume all liability arising from such use. Use of the output of these referenced websites do not imply approval by the governing building code bodies responsible for building code approval and interpretation for the building site described by latitude/longitude location in the windspeed report. http://windspeed.atcouncil.org

- Allowable EPA, to determine max pole loading weight, multiply allowable EPA by 30 lbs.
- The tables for allowable pole EPA are based on the ASCE 7-05 Wind Map or the Florida Region Wind Map for the 2010 Florida Building Code. The Wind Maps are intended only as a general guide and cannot be used in conjunction with other maps. Always consult local authorities to determine maximum wind velocities, gusting and unique wind conditions for each specific application
- Allowable pole EPA for jobsite wind conditions must be equal to or greater than the total EPA for fixtures, arms, and accessories to be assembled to the pole. Responsibility lies with the specifier for correct pole selection. Installation of poles without luminaires or attachment of any unauthorized accessories to poles is discouraged and shall void the manufacturer's warranty
- Wind speeds and listed EPAs are for ground mounted installations. Poles mounted on structures (such as bridges and buildings) must consider vibration and coefficient of height factors beyond this general guide; Consult local and federal standards
- Wind Induced Vibration brought on by steady, unidirectional winds and other unpredictable aerodynamic forces are not included in wind velocity ratings. Consult Pole Vibration Application Guide for environmental risk factors and design considerations.
- Extreme Wind Events like, Hurricanes, Typhoons, Cyclones, or Tornadoes may expose poles to flying debris, wind shear or other detrimental effects not included in wind velocity ratings

Due to our continued efforts to improve our products, product specifications are subject to change without notice.

© 2023 HLI Solutions, Inc. All rights reserved. Information and specifications subject to change without notice. All values are design or typical values when measured under laboratory conditions.

BEACON
design . performance . technology

AA-37 Nautilus

ARMS

DATE: LOCATION:

TYPE: PROJECT:

CATALOG #:

Sample	*AA-37*	*S*	*4*	*B*	*P*	*BBT*
Ordering		/	/	/	/	/
	A	**B**	**C**	**D**	**E**	**F**

DETAILS

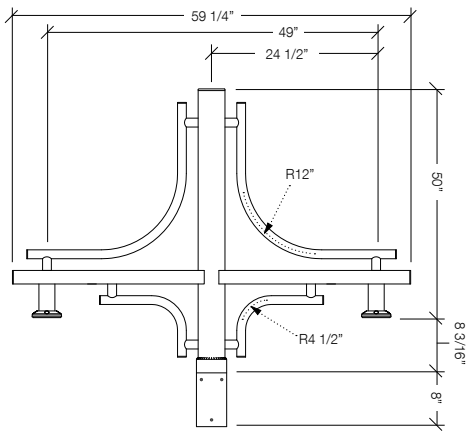

WALL BRACKET DETAILS

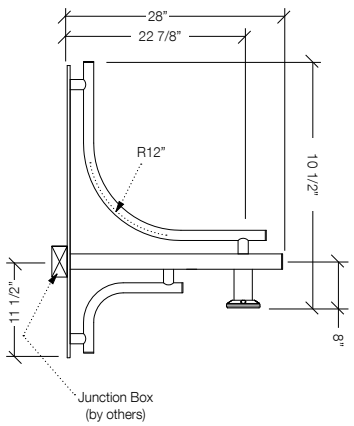

WALL PLATE DETAILS

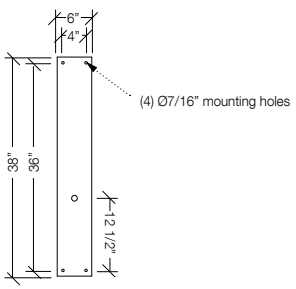

A. MODEL

AA-37	Nautilus

B. POST SHAFT PROFILE

W	wall mount
S	smooth
F	fluted

C. POST SHAFT DIAMETER

4	4"
5	5"
6	6"
OTHER	_____

D. ARRANGEMENT

B *see arrangement table below*

E. LUMINAIRE MOUNTING

P pendant

F. COLOR

BLS - Black Gloss Smooth

BBT	basic black textured
BMT	black matte textured
WHT	white textured
MBT	metallic bronze textured
BZT	bronze textured
DBT	dark bronze textured
GYS	gray smooth
DPS	dark platinum smooth
GNT	green textured
MST	metallic silver textured
MTT	metallic titanium textured
OWI	old world iron
RAL	_____

Construction: All cast aluminum parts shall be low copper alloy A356. All extruded aluminum parts shall be alloy 6061-T6, 6063-T5 or equal.

EPA (effective projected area): EPA is de¬fined as (projected surface area X drag factor) and measured in ft2. Allowable post, luminaire arm, luminaire and accessory EPAs are derived from the most current published AASHTO (American Association of State Highway and Transportation Officials) standard, currently AASHTO 2001 (50yr design life). Customer assumes all responsibility for selecting the ap¬propriate post for installation (consult factory for assistance). Luminaire arm, luminaire and accessory EPA must be equal to or less than allowable EPA of post. Consult a professional engineer for compliance with local codes and standards.

Fasteners: All fasteners shall be Corrosion Resistant. When tamper resistant fasteners are required, spanner HD (snake eye) style shall be provided (special tool required, available at additional cost).

Finish: Finish shall be a Beacote V polyester powder-coat electro-statically applied and thermocured. Beacote V finish shall consist of a five stage iron phosphate chemical pretreatment regimen with a polymer primer sealer, oven dry off, and top coated with a thermoset super TGIC polyester pow¬der coat finish. The finish shall meet the AAMA 605.2 performance specification which includes passing a 3000 hour salt spray test for corrosion resistance and resists cracking or loss of adhesion per ASTM D522 and resists surface impacts of up to 160 inch-pound.

Limited Warranty: Beacon Products warrants its products, to the original purchaser, against defects in materials and workmanship for proper usage for a period of 5 years after date of production, when properly installed, maintained and appropriately specified. See Warranty Information on www.beaconproducts.com for complete details and exclusions.

2CC - 2" Cast Coupling

		arrangement (EPA index ft² / weight (lbs))									
shaft Ø		A	B	C	D	E	F	G	H	I	J
wall	weight	18	-	-	-	-	-	-	-	-	-
Ø4"	EPA	-	3.37	5.04	5.04	-	5.19	5.19	-	-	-
	weight	-	26	36	38	-	46	48	-	-	-
Ø5"	EPA	-	3.80	5.47	5.47	4.49	5.62	5.62	6.07	6.85	6.85
	weight	-	30	40	42	40	50	52	50	60	62
Ø6"	EPA	-	4.22	5.89	5.89	4.91	6.04	6.04	6.49	7.27	7.27
	weight	-	34	44	46	44	54	56	54	64	66

© 2022 HLI Solutions, Inc. All rights reserved. Information and specifications subject to change without notice. All values are design or typical values when measured under laboratory conditions.

BEACON
design . performance . technology

Banner Arms
ARMS

DATE: | LOCATION:

TYPE: | PROJECT:

CATALOG #:

Banner Arm Mounting Styles

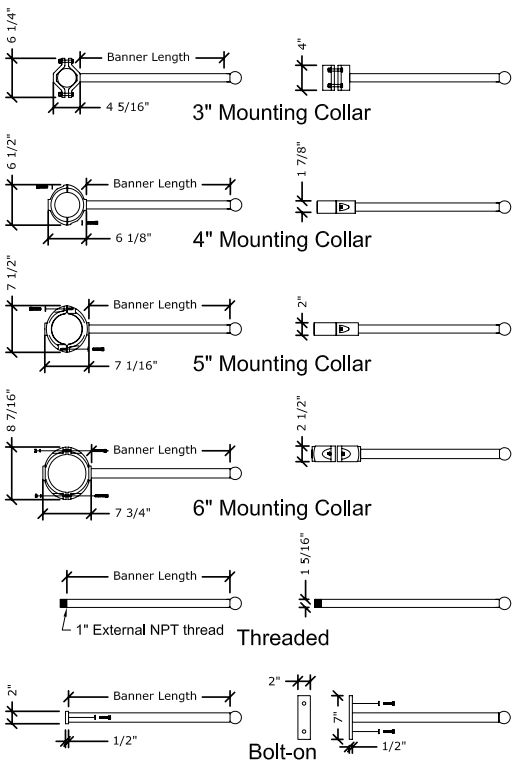

Specifications

Construction:
All cast aluminum parts shall low copper alloy A356. All extruded aluminum parts shall be alloy 6061-T6, 6063-T5 or equal.

Fasteners:
All fasteners shall be stainless steel. When tamper resistant fasteners are required, spanner HD (snake eye) style shall be provided (special tool required, available at additional cost), consult factory for availability.

Finish:
Finish shall be Beacote III polyester powdercoat electrostatically applied and thermocured. Poles shall be subjected to chemical pre-treatment prior to painting by immersion process.

Options

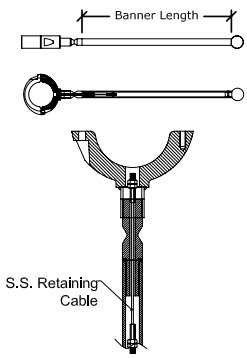

Breakaway Coupler System
breakaway speed varies with banner size (consult factory)

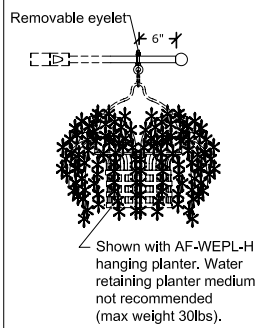

Planter Eyelet

Ordering Example:
AA-0024 / 4"MTC / BA / BKT

AA-00 ___ / _____ / ___ / ___ ____

Length
- ☐ 18 18"
- ☐ 20 20"
- ☐ 22 22"
- ☐ 24 24"
- ☐ 30 30"

Mounting
- ☐ 3"MTC mounting collar for 3" shaft
- ☐ 4"MTC mounting collar for 4" shaft
- ☐ 5"MTC mounting collar for 5" shaft
- ☐ 6"MTC mounting collar for 6" shaft
- ☐ BO bolted connection
- ☐ TO threaded connection

Options
- ☐ BA breakaway coupler system*
- ☐ PA removable planter eyelet*
- ☐ 2X two banner arms at 180°

Finish
- ☐ BB black
- ☐ BZ bronze
- ☐ BG green
- ☐ BW white
- ☐ BY gray
- ☐ RAL RAL-
- ☐ OTHER

Consult factory for premium and verde finishes. Custom colors available.

BLS - Black Gloss Smooth

Notes:
* Consult factory

© 2022 HLI Solutions, Inc. All rights reserved. Information and specifications subject to change without notice. All values are design or typical values when measured under laboratory conditions.

BEACON
design . performance . technology

Domus
POLES & BASES

DATE: LOCATION:

TYPE: PROJECT:

CATALOG #:

RSAB-BC-60-BLS-DOMU

	DOMU		*5*		*BBT*
Sample Ordering		/		/	
	A		**B**		**C**

DETAILS

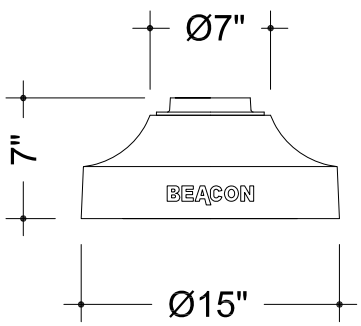

A. MODEL

DOMU	Domus

B. POST SHAFT DIAMETER

3	3"
4	4"
5	5"
6	6"

C. COLOR

BBT	basic black textured
BMT	black matte textured
WHT	white textured
MBT	metallic bronze textured
BZT	bronze textured
DBT	dark bronze textured
GYS	gray smooth
DPS	dark platinum smooth
GNT	green textured
MST	metallic silver textured
MTT	metallic titanium textured
OWI	old world iron
RAL	_____

BLS - Black Gloss Smooth

Construction: All cast aluminum parts shall be low copper alloy A356. All extruded aluminum parts shall be alloy 6061-T6, 6063-T5 or equal. Standard fluted shaft profile shall be 16-flat flutes for 3"OD and 12-flat flutes for 4", 5", & 6"OD.

Base Covers: require specification of smooth or fluted shafts of the size required to meet wind load requirements

Vibration Dampeners: Vibration dampener pads shall be provided when required by customer or deemed necessary by Beacon Products. Please consult factory for bridge mounted applications.

EPA (effective projected area): EPA is defined as (projected surface area X drag factor) and measured in ft2. Allowable post, luminaire arm, luminaire and accessory EPAs are derived from the most current published AASHTO (American Association of State Highway and Transportation Officials) standard, currently AASHTO 2001 (50yr design life). Customer assumes all responsibility for selecting the appropriate post for installation (consult factory for assistance). Luminaire arm, luminaire and accessory EPA must be equal to or less than allowable EPA of post. Consult a professional engineer for compliance with local codes and standards.

Anchor Bolt: Anchor bolts, sized as required, double hex nuts and flat washers shall be hot dipped galvanized steel. A bolt circle template shall be provided for installation.

Fasteners: All fasteners shall be Corrosion Resistant. When tamper resistant fasteners are required, spanner HD (snake eye) style shall be provided (special tool required, available at additional cost).

Finish: Finish shall be a Beacote V polyester powdercoat electrostatically applied and thermocured. Beacote V finish shall consist of a five stage iron phosphate chemical pretreatment regimen with a polymer primer sealer, oven dry off, and top coated with a thermoset super TGIC polyester powder coat finish. The finish shall meet the AAMA 605.2 performance specification which includes passing a 3000 hour salt spray test for corrosion resistance and resists cracking or loss of adhesion per ASTM D522 and resists surface impacts of up to 160 inch-pound.

Limited Warranty: Beacon Products warrants its products, to the original purchaser, against defects in materials and workmanship for proper usage for a period of 5 years after date of production, when properly installed, maintained and appropriately specified.

Due to our continued efforts to improve our products, product specifications are subject to change without notice.

© 2022 HLI Solutions, Inc. All rights reserved. Information and specifications subject to change without notice. All values are design or typical values when measured under laboratory conditions.

Attachment 15
Drawings

UNIVERSITY OF NEW ENGLAND
MARINE SCIENCE CENTER PIER

BIDDEFORD, MAINE

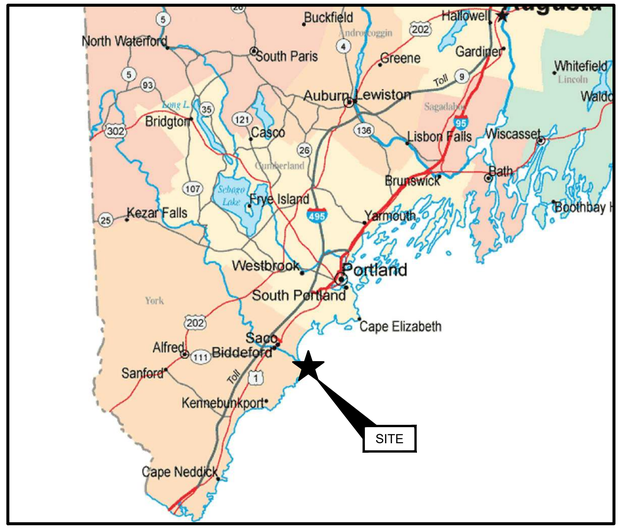

SOURCE:
MAINE ROAD MAP, GOOGLE IMAGES, ACCESSED SEPTEMBER 2023.

STATE MAP
(NOT TO SCALE)

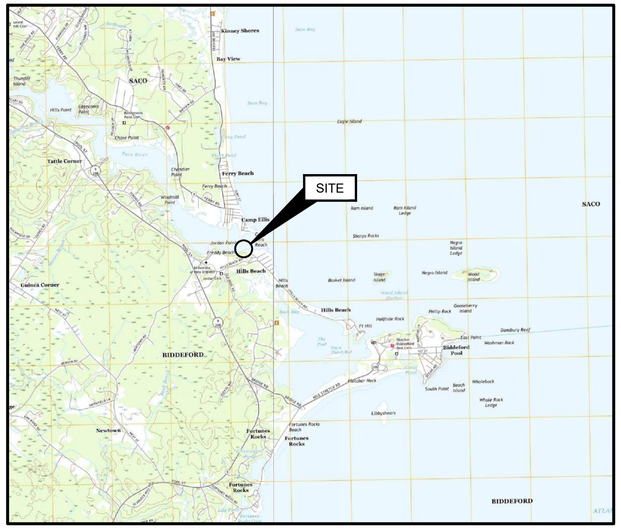

SOURCE:
USGS TOPOGRAPHICAL MAP OF BIDDEFORD, MAINE 2022

SITE LOCATION MAP
(NOT TO SCALE)

PROJECT INFO:

ZONING DISTRICT: INSTITUTIONAL (IN) ZONE WITH LIMITED RESIDENTIAL (LR) SHORELAND OVERLAY
EXISTING AND PROPOSED USE: MARINE RESEARCH CENTER
WATERSHED: SACO RIVER
WITHIN MS4 URBANIZED AREA: YES
WITHIN 100-YEAR FLOOD ZONE: NO
PUBLIC ROAD PROPOSED: NO
PRIVATE ROAD PROPOSED: YES
PUBLIC SEWER CONNECTION: YES, EXISTING
PUBLIC STORM DRAIN CONNECTION: NO

PERVIOUS COVERAGE: EXISTING= 105,843 SF
PROPOSED=95,194 SF

IMPERVIOUS COVERAGE: EXISTING=5,546 SF
PROPOSED=16,195 SF

BUILDING ROOF SQUARE FOOTAGE=751 WITHIN LIMIT OF DISTURBANCE

WAIVERS REQUESTED:
- ARTICLE XI.II. SECTION 5.B.1.A. - SEE COVER LETTER
- ARTICLE XI.II. SECTION 5.B.1.E.3. - SLOPES STEEPER THAN 2:1 IN LEDGE
- ARTICLE VI. SECTION 26.F. - SLOPES STEEPER THAN 3:1 IN CUT/FILL SLOPES
- ARTICLE XIV SECTION 15.H.4 - ROADWAY BANKS STEEPER THAN 2:1

811 DigSafe

THIS DOCUMENT, AND THE IDEAS AND DESIGNS INCORPORATED HEREIN, IS AN INSTRUMENT OF PROFESSIONAL SERVICE, IS THE PROPERTY OF GEI CONSULTANTS AND IS NOT TO BE USED, IN WHOLE OR IN PART, FOR ANY OTHER PROJECT WITHOUT THE WRITTEN AUTHORIZATION OF GEI CONSULTANTS.

PREPARED FOR:

UNIVERSITY OF NEW ENGLAND
11 HILLS BEACH ROAD
BIDDEFORD, MAINE
(207)283-0171

PREPARED BY:

GEI CONSULTANTS, INC.
5 MILK STREET
PORTLAND, ME 04101
(207)797-8901

CITY OF BIDDEFORD PLANNING BOARD
PROJECT NO. 2024.34
GEI PROJECT NO. 2203703

SHEET INDEX

SHEET NO.	DRAWING NO.	TITLE
1	G-001	COVER SHEET
2	G-002	GENERAL NOTES
3	G-003	VICINITY PLAN
4	B-001	BORING LOCATION PLAN
5	B-002	BORING LOGS (1 OF 3)
6	B-003	BORING LOGS (2 OF 3)
7	B-004	BORING LOGS (3 OF 3)
8	B-005	INTERPRETIVE SUBSURFACE PROFILE
9	C-001	EXISTING CONDITIONS PLAN
10	C-002	DEMOLITION AND CONSTRUCTION STAGING
11	C-003	SITE PLAN
12	C-004	GRADING AND DRAINAGE PLAN
13	C-005	EROSION CONTROL PLAN
	ES1.1	ELECTRICAL SITE PLAN
14	C-006	ACCESS ROAD PLAN AND PROFILE STA 1+00 TO MATCHLINE STA 4+00
15	C-007	ACCESS ROAD PLAN AND PROFILE MATCHLINE STA 4+00 TO STA 6+60
16	C-008	ACCESS ROAD TYPICAL SECTION
17	C-009	ACCESS ROAD SECTIONS 2+00 TO 3+75
18	C-010	ACCESS ROAD SECTIONS 4+00 TO 5+75
19	C-011	SITE DETAILS I
20	C-012	EROSION CONTROL NOTES
21	C-013	EROSION CONTROL DETAILS I
22	C-014	EROSION CONTROL DETAILS II
23	C-015	REVEGETATION PLAN
24	C-016	REVEGETATION NOTES, DETAILS AND SCHEDULES
25	S-001	PIER LAYOUT PLAN
26	S-002	PIER PLANS AND ELEVATIONS
27	S-003	TYPICAL PIER SECTIONS (1 OF 2)
28	S-004	TYPICAL PIER SECTIONS (2 OF 2)
29	S-005	PILE PLAN
30	S-006	PRECAST PILE CAP PLAN (1 OF 2)
31	S-007	PRECAST PILE CAP PLAN (1 OF 2)
32	S-008	PRECAST DECK PLANK PLAN
33	S-009	MISCELLANEOUS DETAILS (1 OF 5)
34	S-010	MISCELLANEOUS DETAILS (2 OF 5)
35	S-011	MISCELLANEOUS DETAILS (3 OF 5)
36	S-012	MISCELLANEOUS DETAILS (4 OF 5)
37	S-013	MISCELLANEOUS DETAILS (5 OF 5)
38	S-014	ABUTMENT DETAILS
39	F-001	FLOAT PLAN AND DETAILS

FOR PERMIT

NO.	DATE	ISSUE/REVISION	APP
8	6/5/2025	ADDRESS PB COMMENTS	DJB
7	4/16/2025	BIDDEFORD PERMIT APP.	DJB
6	9/17/2024	REVISED PERMIT SET	DJB
5	6/27/2024	REVISED PERMIT SET	DJB
4	9/14/2023	DEP PERMIT SET	DJB

STATE OF MAINE
BRIAN M. MCDEVITT
PE18260
LICENSED PROFESSIONAL ENGINEER
6/9/2025

DWG. NO.
G-001

SHEET NO.
1 OF 39

DICASTELNUOVO, VINNIE B:\Working\UNIVERSITY OF NEW ENGLAND\2203703 UNE Marine Science Center Pier\00_CAD\Design\Sheets\2203703-G-001.dwg - 6/9/2025

COORDINATION OF WORK:

1. THE CONTRACTOR SHALL SCHEDULE ALL ACTIVITIES SO AS TO LIMIT IMPACT TO MARINE AND LANDSIDE USES.
2. WORK SHALL BE COORDINATED WITH THE OWNER AND THEIR REPRESENTATIVES:

UNE:A:A:A:	ANDREW PHILIPPE	207-602-2365 (OFFICE)	207-400-6166 (CELL)
GEI:A:A:B:	DANIEL BANNON	207-347-2372 (OFFICE)	207-671-2583 (CELL)
SDA:A:A:C:	TOM SAUCIER	207-449-4275	

3. WORK IS SUBJECT TO THE FOLLOWING TIME OF YEAR AND TIMING OF ACTIVITY RESTRICTIONS:
   - TO BE DEFINED UPON PERMIT APPROVAL.
4. CONTRACTOR ACCESS TO THE SITE BY WATER SHALL AT NO TIME IMPACT USE OF THE ADJACENT FEDERAL NAVIGATION CHANNEL.
5. THE OWNER WILL PERMIT THE CONTRACTOR TO HAVE A LAYDOWN AREA ON THE UPLAND PROPERTY FOR USE DURING CONSTRUCTION. AN APPROXIMATE LAYDOWN AREA IS SHOWN ON SHEET C-005. THE FINAL LOCATION AND DIMENSIONS OF THE LAYDOWN AREA SHALL BE APPROVED BY THE OWNER.

SITE ENVIRONMENTAL CONTROLS:

1. ALL WORK SHALL BE PERFORMED IN COMPLIANCE WITH CITY, STATE, AND FEDERAL PERMITS. COPIES OF PERMIT APPROVALS ARE PROVIDED IN THE PROJECT MANUAL.

OSHA REQUIREMENTS:

1. PURSUANT TO 26 M.R.S.A. §565, THE CONTRACTOR SHALL ADHERE TO THE OCCUPATIONAL SAFETY AND HEALTH STANDARDS AS PROMULGATED BY THE FEDERAL OCCUPATIONAL SAFETY AND HEALTH ADMINISTRATION (OSHA) AT 29-CFR PART 1926 AS MOST RECENTLY AMENDED.

EROSION CONTROL:

1. EROSION AND SEDIMENTATION CONTROL MEASURES ARE PROPOSED TO CONTROL ACCELERATED EROSION AND SEDIMENTATION AND REDUCE ADVERSE IMPACTS FROM RUNOFF AND EROSION AT THE WORK SITE.
2. APPLICATION OF TEMPORARY AND PERMANENT EROSION CONTROL MEASURES SHALL BE IN ACCORDANCE WITH THE LATEST EDITION OF THE MAINE EROSION AND SEDIMENT CONTROL BMP'S PUBLISHED BY MAINE DEP AND AVAILABLE AT: HTTPS://WWW.MAINE.GOV/DEP/LAND/EROSION/ESCBMPS/
3. THE WORK SHALL BE PERFORMED BY A CONTRACTOR THAT IS CERTIFIED BY MAINE DEP IN EROSION AND SEDIMENT CONTROL MEASURES. A CERTIFIED INDIVIDUAL SHALL BE ONSITE DURING ALL CONSTRUCTION ACTIVITY.
4. EROSION AND SEDIMENTATION DUE TO RUNOFF, TIDAL EXPOSURE, AND WAVE ACTION SHALL BE CONTROLLED BY STAGING CONSTRUCTION ACTIVITY TO MINIMIZE AREA AND TIME OF DISTURBANCE, APPLICATION OF SILT FENCE, BARRIERS, AND OTHER EROSION CONTROL MEASURES, AND PRESERVING NATURAL VEGETATION WHENEVER POSSIBLE.
5. THE CONTRACTOR'S SEQUENCE OF OPERATIONS AND SCHEDULE FOR WORK ACTIVITIES SHALL ACT TO MINIMIZE EXPOSURE TO EROSION.
6. THE CONTRACTOR SHALL TAKE CARE TO LIMIT THE AREA OF SOIL DISTURBANCE TO THE MINIMUM NECESSARY TO COMPLETE THE WORK.
7. EROSION CONTROL MEASURES, SEEDING, AND VEGETATION SHALL BE INSPECTED WEEKLY AND AFTER RAINSTORMS, RUNOFF EVENTS, AND STORM EVENTS UNTIL FINAL ACCEPTANCE. REPAIRS SHALL BE MADE WHEN NO LONGER SERVICEABLE DUE TO DAMAGE OR ACCUMULATION OF SEDIMENT.
8. AT THE COMPLETION OF CONSTRUCTION, ALL DISTURBED AREAS SHALL BE RESTORED TO THEIR ORIGINAL CONDITION AND CONTOUR, UNLESS OTHERWISE INDICATED ON THE PLANS.

SITE PREPARATION:

1. CONTRACTOR SHALL INSTALL ALL SIGNAGE PRIOR TO INITIATION OF CONSTRUCTION ACTIVITIES. INCLUDE OWNER PROJECT SIGNAGE AND FEDERAL AND STATE MANDATED WORK PLACE SIGNAGE.
2. CONTRACTOR SHALL HAVE IN-PLACE TRASH AND SANITARY FACILITIES FOR THE WORK PLACE.
3. DISCOVERY OF INCONSISTENT SITE INFORMATION OR CONDITIONS ARE TO BE IMMEDIATELY CONVEYED TO THE OWNER AND ENGINEER PRIOR TO COMMENCING OR CONTINUING CONSTRUCTION.
4. THE CONTRACTOR SHALL NOTIFY DIG SAFE PRIOR TO COMMENCING ANY WORK.
5. LOCATIONS OF EXISTING UTILITIES SHOWN ARE APPROXIMATE. THE CONTRACTOR SHALL VERIFY LOCATIONS OF UTILITIES AS MAY BE REQUIRED. THE CONTRACTOR SHALL BE FULLY RESPONSIBLE FOR ANY AND ALL DAMAGES OCCURRING AS A RESULT OF THE CONTRACTOR'S FAILURE TO LOCATE AND PROTECT UNDERGROUND UTILITIES. ALL REPAIRS SHALL BE MADE AT THE CONTRACTOR'S EXPENSE.
6. CONTRACTOR SHALL MAINTAIN AND PROTECT ALL EXISTING UTILITIES AND DRAINAGE AT ALL TIMES. THE CONTRACTOR SHALL REPAIR ANY DAMAGE AND RESTORE TO THE PRE-EXISTING CONDITION AT NO COST TO THE OWNER.
7. CONTRACTOR SHALL PROTECT ALL EXISTING STRUCTURES AND SHALL PERFORM THE WORK IN A MANNER THAT AVOIDS DAMAGE TO EXISTING STRUCTURES. STRUCTURES INCLUDE, BUT ARE NOT LIMITED TO, BUILDINGS, PIERS, BULKHEADS, FLOATS, PIER UTILITIES AND FIXTURES, AND RIPRAP SLOPES. CONTRACTOR SHALL REPAIR ANY DAMAGE AT NO ADDITIONAL COST TO THE CITY.
8. CONTRACTOR SHALL SUPPLY ALL NECESSARY TEMPORARY UTILITIES FOR CONSTRUCTION INCLUDING, BUT NOT LIMITED TO; WATER, POWER, LIGHTING, DATA, AND TELEPHONE.
9. CONTRACTOR SHALL READ AND UNDERSTAND ALL REGULATORY CONDITIONS ASSOCIATED WITH THE PROJECT AND SHALL COMPLY WITH ALL ENVIRONMENTAL REQUIREMENTS AND PERMIT CONDITIONS.
10. CONTRACTOR SHALL PROVIDE A CONFINED CONCRETE TRUCK WASHDOWN AREA AT A LOCATION TO BE APPROVED BY THE ENGINEER. WASHDOWN AREA SHALL INCLUDE PROTECTION TO PAVEMENT, A PERIMETER WALL AND A FILTER FABRIC LINER. NO RUNOFF CONTAINING CEMENT OR OTHER SUSPENDED SOLIDS WILL BE PERMITTED. ALL MATERIALS SHALL BE COMPLETELY REMOVED UPON COMPLETION OF CONSTRUCTION AND DISPOSED OF AT AN APPROVED DISPOSAL LOCATION.

CODES:

1. MAINE DOT STANDARD SPECIFICATIONS, MARCH 2020 ED. WITH SUPPLEMENTAL SPECIFICATIONS THROUGH JUNE 16,2023.
2. MAINE UNIFORM BUILDING AND ENERGY CODE (MUBEC).
3. AMERICAN CONCRETE INSTITUTE (ACI) 318-14: BUILDING CODE REQUIREMENTS FOR STRUCTURAL CONCRETE, 2014 ED.
4. CONCRETE REINFORCING STEEL INSTITUTE (CRSI):
5. AMERICAN INSTITUTE FOR STEEL CONSTRUCTION (AISC) STEEL CONSTRUCTION MANUAL, 15TH ED.
6. ALUMINUM ASSOCIATION, ALUMINUM DESIGN MANUAL, 2015 ED.
7. AMERICAN WOOD COUNCIL, NATIONAL DESIGN SPECIFICATIONS (NDS) FOR WOOD CONSTRUCTION, 2015 ED.

SITE CONTROL AND BASELINES:

1. PROJECT BASE PLAN HAS BEEN DEVELOPED FROM A COMPILATION OF MULTIPLE SURVEYS AS DESCRIBED UNDER "SURVEY AND PROPERTY NOTES".
2. ELEVATIONS ARE PROVIDED IN NAVD88 VERTICAL DATUM UNLESS OTHERWISE NOTED.
3. THE CONTRACTOR SHALL INSTALL SURVEY CONTROL AS NECESSARY TO PERFORM THE WORK. PERMANENT SURVEY CONTROL (AT LEAST 2 POINTS) SHALL BE ESTABLISHED FOR THE PROJECT AND PROTECTED FROM DAMAGE DURING CONSTRUCTION AND PROVIDED ON AS-BUILT DRAWINGS.
4. THE CONTRACTOR SHALL ESTABLISH AND MAINTAIN PROJECT BASELINES AND CONTROL AS REQUIRED TO ENSURE ACCURATE LOCATION OF ALL ELEMENTS OF THE PROJECT.

SURVEY AND PROPERTY NOTES:

1. LOCUS PARCEL IS DEPICTED ON CITY OF BIDDEFORD, TAX MAP 52, LOT 4 AND IS LOCATED IN THE INSTITUTIONAL (IN) ZONE. A PORTION OF THE SITE IS LOCATED IN THE LIMITED RESIDENTIAL (LR) SHORELAND OVERLAY DISTRICT.
2. THE RECORD OWNER IS THE UNIVERSITY OF NEW ENGLAND, BY DEED DATED APRIL 18, 1962, RECORDED IN THE YORK COUNTY REGISTRY OF DEEDS IN BOOK 1484, PAGE 0145.
3. UPLAND TOPOGRAPHY AND BASE SURVEY INFORMATION DEPICTED HEREON ARE BASED ON THE FOLLOWING SURVEYS:
   - "TOPOGRAPHIC SURVEY, MARINE SCIENCE CENTER, UNIVERSITY OF NEW ENGLAND" BY OWEN HASKELL, INC. DATED DEC. 13, 2022.
   - "TOPOGRAPHIC SURVEY AT MARINE SCIENCE CENTER" BY STATEWIDE SURVEYS, INC., DATED MAY 4, 2015.
4. HYDROGRAPHIC DATA DEPICTED HEREON IS BASED ON 2022 SURVEY BY OWEN HASKELL SURVEY.
5. FEDERAL CHANNEL LIMITS ARE DEPICTED BASED ON THE PLAN. "SACO RIVER, SACE AND BIDDEFORD, MAINE, CONDITION SURVEY" PUBLISHED BY THE U.S. ARMY CORPS OF ENGINEERS, DATED JULY 3, 2021.
6. HORIZONTAL COORDINATES ARE BASED ON NAD83 MAINE STATE PLANE WEST ZONE-1801 AND ARE EXPRESSED IN FEET. ELEVATIONS ARE BASED ON NAVD88 VERTICAL DATUM AND CONTROL POINTS PROVIDED BY UNE.
7. UTILITY INFORMATION DEPICTED HEREON IS BASED ON FEBRUARY 2023 UTILITY LOCATION SURVEY PERFORMED BY BLOOD HOUND, LLC UNDERGROUND UTILITY LOCATORS AND MAY NOT NECESSARILY REPRESENT ALL EXISTING UTILITIES. CONTACT DIG SAFE (1-888-DIG-SAFE) AND VERIFY EXISTING UTILITIES PRIOR TO ANY CONSTRUCTION OR EXCAVATION.
8. PORTIONS OF THE PROPERTY ARE DEPICTED AS BEING IN A SPECIAL FLOOD HAZARD AREA BASED ON FEMA PRELIMINARY FIRM 23031C0459G DATED APRIL 14, 2017. THE SITE IS LOCATED IN A VE ZONE HAVING BASE FLOOD ELEVATION OF 14 FT NAVD88.
9. SUBSURFACE INFORMATION IS BASED ON EXPLORATIONS PERFORMED IN 2015 AND 2022 CONSISTING OF BORINGS, PROBES, AND TEST PITS. REFER TO SHEETS B-001 - B-005 FOR SUBSURFACE INFORMATION.

CONCRETE

1. CAST IN PLACE CONCRETE SHALL CONFORM TO THE FOLLOWING SPECIFICATIONS BASED ON THE MAINE DOT STANDARD SPECIFICATION:

LOCATION	MDOT CLASS	f'c
ALL CONCRETE	CLASS LP	5,000 PSI

2. ALL REINFORCEMENT SHALL BE NEW DEFORMED BARS, GRADE 60 CONFORMING TO ASTM A615, HOT DIP GALVANIZED ACCORDING TO ASTM A767/A767M OR ASTM A1094/A1094M.
3. REINFORCEMENT ACCESSORIES SHALL BE DIELECTRIC COATED STEEL OR APPROVED PLASTIC.
3. GROUT SHALL BE A HIGH STRENGTH, NON-SHRINK GROUT WITH SALT WATER RESISTANCE.
4. CONCRETE COVER SHALL BE A MINIMUM OF 3 INCHES UNLESS NOTED OTHERWISE.
5. ALL EXPOSED EDGES OF CONCRETE AT COLD JOINTS SHALL HAVE A ROUGHENED FINISH AND BE COATED WITH EPOXY BONDING AGENT PRIOR TO CASTING ADJACENT POUR.
6. PROVIDE 1 INCH CHAMFER ON ALL EXPOSED EDGES UNLESS NOTED OR DIRECTED OTHERWISE.
7. TOP SURFACE OF EXPOSED CONCRETE SHALL RECEIVE A BROOM FINISH.
8. COAT FINISHED SURFACES OF CONCRETE WITH A 100% SILANE PENETRATING CONCRETE SEALER SUITABLE FOR USE IN A MARINE ENVIRONMENT. SEALER SHALL BE LISTED ON THE MAINE DOT QUALIFIED PRODUCTS LIST.
9. REINFORCEMENT DEVELOPMENT AND LAP SPLICE LENGTHS SHALL BE IN ACCORDANCE WITH ACI 318.
10. CONCRETE MIX DESIGN SHALL INCLUDE THE USE OF CORROSION INHIBITING ADMIXTURE AT DOSAGE SUITABLE FOR USE IN AN AGGRESSIVE MARINE ENVIRONMENT. CORROSION INHIBITOR SHALL BE LISTED ON THE MAINE DOT QUALIFIED PRODUCTS LIST.

EPOXY ANCHORS

1. ANCHOR ROD, WASHERS, AND NUTS SHALL CONFORM TO ASTM F1554, GRADE 36, AND SHALL BE HOT DIP GALVANIZED.
2. THE MINIMUM EDGE DISTANCE AND MINIMUM SPACING FOR ALL ANCHORS SHALL BE 6 BOLT DIAMETERS.
3. ALL HOLES SHALL BE DRILLED TO THE RECOMMENDED DIAMETER PER MANUFACTURERS REQUIREMENTS USING CARBIDE DRILL BITS MEETING ANSI B212.5-1994.
4. HOLES SHALL BE BRUSHED WITH NYLON BRUSH AND BLOWN CLEAN USING OIL-FREE COMPRESSED AIR A MINIMUM OF TWO TIMES.
5. ALL HOLES SHALL BE FREE OF STANDING WATER BEFORE INSTALLING ANCHORS.
6. EPOXY SHALL HAVE MINIMUM BOND STRENGTH OF 1,600 PSI @ 14 DAYS.

EARTHWORK

1. EARTHWORK MATERIALS SHALL MEET THE FOLLOWING SPECIFICATIONS:

AGGREGATE BASE	TYPE A (MDOT 703.06A)
AGGREGATE SUBBASE	TYPE D (MDOT 703.06C)
WALL BACKFILL	CRUSHED STONE ¾" (MDOT 703.13)
DRAINAGE STONE	CRUSHED STONE 2 INCH (MDOT 703.31)
ORDINARY BORROW	SEE #2 BELOW.

2. ORDINARY BORROW SHALL BE EXISTING GRANULAR SOIL WITH MAXIMUM 4 INCH STONE SUBJECT TO APPROVAL BY THE ENGINEER. ALL DEBRIS OR OTHER DELETERIOUS MATERIALS SHALL BE REMOVED FROM ORDINARY BORROW PRIOR TO REUSE.

STEEL

1. STEEL ANGLE, STRAPS, AND MISCELLANEOUS FABRICATIONS SHALL BE ASTM A36 HOT DIP GALVANIZED AFTER FABRICATION, UNLESS OTHERWISE NOTED.
2. ALL FASTENERS SHALL BE HOT-DIP GALVANIZED OR STAINLESS STEEL.
3. ALL BOLTS SHALL CONFORM TO ASTM A307. MINIMUM SIZE SHALL BE ⅝ INCH UNLESS OTHERWISE NOTED.

HEAVY TIMBER

1. UNLESS OTHERWISE SPECIFIED, ALL TIMBER FRAMING TO BE USED SHALL BE NO. 1 AND BETTER SOUTHERN PINE AS GRADED BY SPIB AND WITH DESIGN VALUES PER NDS 2015.
2. ALL TIMBER SHALL BE NEW AND SUPPLIED WITH NOMINAL DIMENSIONS UNLESS OTHERWISE NOTED.
3. ALL NEW SOUTHERN YELLOW PINE TIMBER MEMBERS TO WHICH THE PUBLIC MAY BE EXPOSED SHALL BE TREATED WITH ALKALINE COPPER QUATERNARY (ACQ) IN ACCORDANCE WITH AWPA & AWPB W/ MINIMUM RETENTION OF 0.60 LBS. PER CUBIC FOOT. ALL OTHER SOUTHERN YELLOW PINE MEMBERS SHALL BE CCA TREATED TO 2.5 PCF RETENTION.
4. ALL EXPOSED EDGES SHALL BE PLANED OR SANDED TO PROVIDE SMOOTH SURFACE FREE OF ROUGH EDGES OR DEFECTS.
5. ALL EXPOSED FASTENERS SHALL BE COUNTERSUNK.
6. DOCK WASHERS SHALL BE PROVIDED BENEATH NUT OR BOLT HEAD OF ALL TIMBER BOLTED CONNECTIONS. TIMBER BOLTS SHALL BE CONSIDERED AN ACCEPTABLE ALTERNATIVE TO HEX HEADED BOLTS WITH DOCK WASHERS.
7. STANDARD WASHERS SHALL BE PERMISSIBLE WHERE CONNECTED PARTS INCLUDE STEEL PLATES, ANGLES, BRACKETS, OR BACKER PLATES.

TIMBER PILES

1. TIMBER PILES SHALL BE TROPICAL GREENHEART AND SHALL CONFORM TO ASTM D25.
2. PROVIDE PROTECTION TO PILE TIP AND BUTT TO AVOID DAMAGE DURING DRIVING.
3. PILES SHALL BE ORDERED MINIMUM 5 FT LONGER THAN TABULATED LENGTHS TO ALLOW FOR INSTALLATION VARIABILITY AND CUTOFF.
4. ALL TIMBER PILES SHALL BE DRIVEN TO THE MINIMUM EMBEDMENT OR CAPACITY CRITERIA INDICATED IN THE PILE SCHEDULE. FENDER PILES MAY BE INSTALLED TO THE REQUIRED DEPTH USING A VIBRATORY HAMMER. IN THE EVENT THAT A VIBRATORY HAMMER IS UNABLE TO ACHIEVE THE MINIMUM REQUIRED EMBEDMENT, THE CONTRACTOR WILL BE RESPONSIBLE FOR COMPLETING FINAL SET USING AN IMPACT HAMMER.
5. GREENHEART PILES SHALL BE BANDED WITH 1½ INCH STAINLESS STEEL UTILITY STRAPPING PRIOR TO CUTOFF. REFER TO DETAIL ON SHEET S-009.

ASPHALT

1. PAVING GRADES SHALL PITCH TO EXISTING STRUCTURES.
2. PAVEMENT SHALL CONSIST OF 4" OF HOT MIX ASPHALT PLACED IN TWO COURSES, SEE DETAIL.
3. CONTRACTOR TO SAW CUT PAVEMENT AT LIMIT OF REMOVAL.
4. CONTRACTOR TO PROVIDE SMOOTH TRANSITIONS BETWEEN NEW AND EXISTING ASPHALT.
5. CONTRACTOR TO SEAL JOINT BETWEEN NEW AND EXISTING ASPHALT WITH BITUMINOUS JOINT SEALANT.

GEOTEXTILE

1. GEOTEXTILE SEPARATION FABRIC SHALL BE MIRAFI FW700 OR EQUIVALENT.
2. OVERLAP ALL SEAMS MINIMUM 2 FT.
3. INSTALL PER MANUFACTURERS RECOMMENDATIONS.

STEEL PIPE PILES

1. STEEL PIPE PILES SHALL CONFORM TO ASTM A252, GRADE 3.
2. ALL PILES SHALL BE SEAMLESS.
3. AN OPEN CUTTING SHOE IS REQUIRED.
4. PIPE PILES SHALL BE COATED WITH FUSION BONDED EPOXY, COLOR BROWN. MINIMUM COATING THICKNESS SHALL BE 18-20 MIL. COATING SHALL EXTEND FROM TOP OF PILE DOWN TO MINIMUM 5-FEET BELOW GRADE.
5. DAMAGE TO ANY STEEL COATING SHALL BE TOUCHED UP BY THE CONTRACTOR USING APPROVED MATERIALS AND METHODS.
6. ALL PILES SHALL BE FILLED TO THE TOP WITH CONCRETE AFTER INSTALLATION. ROCK-SOCKETED PILES SHALL BE CLEANED OUT AND FILLED FOR THEIR ENTIRE LENGTH PRIOR TO CONCRETE FILLING. DRIVEN PILES SHALL BE CLEANED OUT TO MINIMUM 10-FEET BELOW ADJACENT MUDLINE.
7. REFER TO PILE SCHEDULE ON SHEET S-005 FOR ESTIMATED PILE LENGTHS, COATING LENGTHS, SIZES, AND SOCKETING REQUIREMENTS.

TIMBER FLOATS

1. FLOAT MANUFACTURER SHALL SUBMIT SHOP DRAWINGS AND CALCULATIONS SIGNED AND SEALED BY A MAINE LICENSED PROFESSIONAL ENGINEER. MANUFACTURER SHALL BE RESPONSIBLE FOR FINAL DETERMINATION OF FLOAT FRAMING AND DRUM LAYOUT TO MEET BOUYANCY, LOADING, AND ENVIRONMENTAL EXPOSURE REQUIREMENTS IN ACCORDANCE WITH THE SPECIFICATIONS.
2. UNLESS OTHERWISE SPECIFIED, ALL TIMBER TO BE USED SHALL BE NO. 1 AND BETTER SOUTHERN PINE AS GRADED BY SPIB AND WITH DESIGN VALUES PER NFPA NATIONAL DESIGN SPECIFICATION OR THE EQUIVALENT FOR DOUGLAS FIR AS GRADED BY WCLIB AND WWPA.
3. ALL TIMBER SHALL BE NEW AND SUPPLIED WITH NOMINAL DIMENSIONS.
4. ALL TIMBER MEMBERS TO WHICH THE PUBLIC MAY BE EXPOSED SHALL BE TREATED WITH ALKALINE COPPER QUATERNARY (ACQ) IN ACCORDANCE WITH AWPA & AWPB W/ MINIMUM RETENTION OF 0.40 LBS. PER CUBIC FOOT. ALL OTHER SOUTHERN YELLOW PINE MEMBERS SHALL BE CCA TREATED TO 2.5 PCF RETENTION.
5. DECKING SHALL BE NO. 1 SOUTHERN PINE, MINIMUM SIZE 2X6.
6. MISC. HARDWARE: GALVANIZED STEEL PLATES AND ALL BOLTS AND RELATED HARDWARE SHALL BE FASHIONED FROM STEEL AND GALVANIZED AFTER FABRICATION AND IN ACCORDANCE WITH REQUIREMENTS OF ASTM A123, AND/OR A153. BOLTS AND NUTS SHALL CONFORM TO ASTM A307.
7. CONNECTION HARDWARE SHALL BE FABRICATED FROM ASTM-A36 GRADE STEEL WITH MINIMUM THICKNESS ¼".
8. PROVIDE GUIDE/WEARING BRACKETS AT GANGWAY LANDING ON FLOAT 'C' PER DETAIL A ON SHEET S-012. BRACKETS SHALL BE LOCATED IN FIELD TO BE CENTERED ON GANGWAY RANGE OF TRAVEL AT MID-TIDE ELEVATION.
9. TRANSITIONS BETWEEN FLOATING DOCKS SHALL INCLUDE ADA COMPLIANT TRANSITION PLATES ACROSS GAPS AT HINGE LOCATIONS.
10. FLOATING DOCKS SHALL MEET THE FOLLOWING LOADING AND FREEBOARD CRITERIA:

DEAD LOAD	20 INCH FREEBOARD
20 PSF UNIFORM LIVE LOAD	MINIMUM 8 INCH FREEBOARD
40 PSF UNIFORM LIVE LOAD	MINIMUM ZERO FREEBOARD

DEAD LOADS SHALL INCLUDE ALL COMPONENTS AND ATTACHMENTS INCLUDING WEIGHT OF ALUMINUM GANGWAY BEARING ON FLOAT 'C'.

ALUMINUM GANGWAY

1. GANGWAY MANUFACTURER SHALL SUBMIT SHOP DRAWINGS AND CALCULATIONS SIGNED AND SEALED BY A MAINE LICENSED PROFESSIONAL ENGINEER. MANUFACTURER SHALL BE RESPONSIBLE FOR FINAL DETERMINATION OF GANGWAY FRAMING AND CONFIGURATION TO MEET STRUCTURAL, PERFORMANCE, AND ACCESSIBILITY REQUIREMENTS IN ACCORDANCE WITH THE SPECIFICATIONS.
2. GANGWAY SHALL MEET THE FOLLOWING LOADING AND DEFLECTION CRITERIA:
   - DEAD LOAD SHALL CONSIST OF WEIGHT OF THE ENTIRE GANGWAY STRUCTURE PLUS ANY UTILITIES AND ATTACHMENTS.
   - ALLOWABLE STRESSES IN DECK SURFACE, GANGWAY FRAMING, AND MOUNTING COMPONENTS SHALL NOT BE EXCEEDED AT A UNIFORM LIVE LOAD OF 100 PSF.
   - 50 PSF UNIFORM LIVE LOAD MAX. DEFLECTION L/360
   - 100 PSF UNIFORM LIVE LOAD MAX. DEFLECTION NOT TO EXCEED GANGWAY CAMBER
   - ALL HANDRAIL AND POSTS SHALL BE DESIGNED TO WITHSTAND A 200 LB LOAD APPLIED IN ANY DIRECTION OR A 50 LB/FT LOAD APPLIED ALONG THE HANDRAIL LENGTH.
3. GANGWAY HINGES SHALL BE CAPABLE OF TRAVELING FREELY AND WITHOUT BINDING THROUGH THE ENTIRE RANGE OF WATER LEVELS FROM MLLW TO BASE FLOOD ELEVATION PLUS TWO-FEET OF ADDITIONAL ELEVATION IN EITHER DIRECTION.

FOR PERMIT

Attention:
0 1"
If this scale bar does not measure 1" then drawing is not original scale.

STATE OF MAINE
BRIAN M. MCDEVITT
PE18260
LICENSED
PROFESSIONAL ENGINEER
6/9/2025

Designed:	DJB
Drawn:	JAM
Checked:	BJB
Approved:	BMM
P.E. No:	13033
GEI Project	2203703

GEI Consultants
GEI CONSULTANTS, INC.
5 MILK STREET
PORTLAND, ME 04101
(207)797-8901

UNE
UNIVERSITY OF NEW ENGLAND
11 HILLS BEACH RD.
BIDDEFORD, MAINE

UNIVERSITY OF NEW ENGLAND MARINE SCIENCE CENTER PIER

11 HILLS BEACH ROAD
BIDDEFORD, YORK COUNTY, MAINE

NO	DATE	ISSUE/REVISION	APP
8	6/5/2025	ADDRESS PB COMMENTS	DJB
7	4/16/2025	BIDDEFORD PERMIT APP.	DJB
6	9/17/2024	REVISED PERMIT SET	DJB
5	6/27/2024	REVISED PERMIT SET	DJB
4	9/14/2023	DEP PERMIT SET	DJB
3	6/28/2023	75% DESIGN SUBMISSION	DJB
2	2/15/2023	30% DESIGN SUBMISSION	DJB
1	12/9/2022	15% DESIGN SUB REV	DJB
0	11/11/2022	15% DESIGN SUBMISSION	DJB

SHEET NAME
GENERAL NOTES

SHEET NO.
G-002

DIGASTELNJOVO, VINNIE B:\Working\UNIVERSITY OF NEW ENGLAND\2203703 UNE Marine Science Center Pier\00_CAD\Design\Sheets\2203703-G-002.dwg - 6/9/2025



0 200 400
SCALE, FEET

FOR PERMIT

Attention:
0 1"
If this scale bar does not measure 1" then drawing is not original scale.

STATE OF MAINE
BRIAN M. MCDEVITT
PE18260
LICENSED
PROFESSIONAL ENGINEER
6/9/2025

Designed:	DJB
Drawn:	JAM
Checked:	BJB
Approved:	BMM
P.E. No:	13033
GEI Project	2203703

GEI Consultants
GEI CONSULTANTS, INC.
5 MILK STREET
PORTLAND, ME 04101
(207)797-8901

UNE
UNIVERSITY OF NEW ENGLAND
11 HILLS BEACH RD.
BIDDEFORD, MAINE

UNIVERSITY OF NEW ENGLAND MARINE SCIENCE CENTER PIER

11 HILLS BEACH ROAD
BIDDEFORD, YORK COUNTY, MAINE

NO	DATE	ISSUE/REVISION	APP
8	6/5/2025	ADDRESS PB COMMENTS	DJB
7	4/16/2025	BIDDEFORD PERMIT APP.	DJB
6	9/17/2024	REVISED PERMIT SET	DJB
5	6/27/2024	REVISED PERMIT SET	DJB
4	9/14/2023	DEP PERMIT SET	DJB
3	6/28/2023	75% DESIGN SUBMISSION	DJB
2	2/15/2023	30% DESIGN SUBMISSION	DJB
1	12/9/2022	15% DESIGN SUB REV	DJB
0	11/11/2022	15% DESIGN SUBMISSION	DJB

SHEET NAME: **VICINITY PLAN**

SHEET NO.: **G-003**

DICASTELNUOVO, VINNIE B:\Working\UNIVERSITY OF NEW ENGLAND\2203703 UNE Marine Science Center Pier\00_CAD\Design\Sheets\2203703-G-003.dwg - 6/8/2025

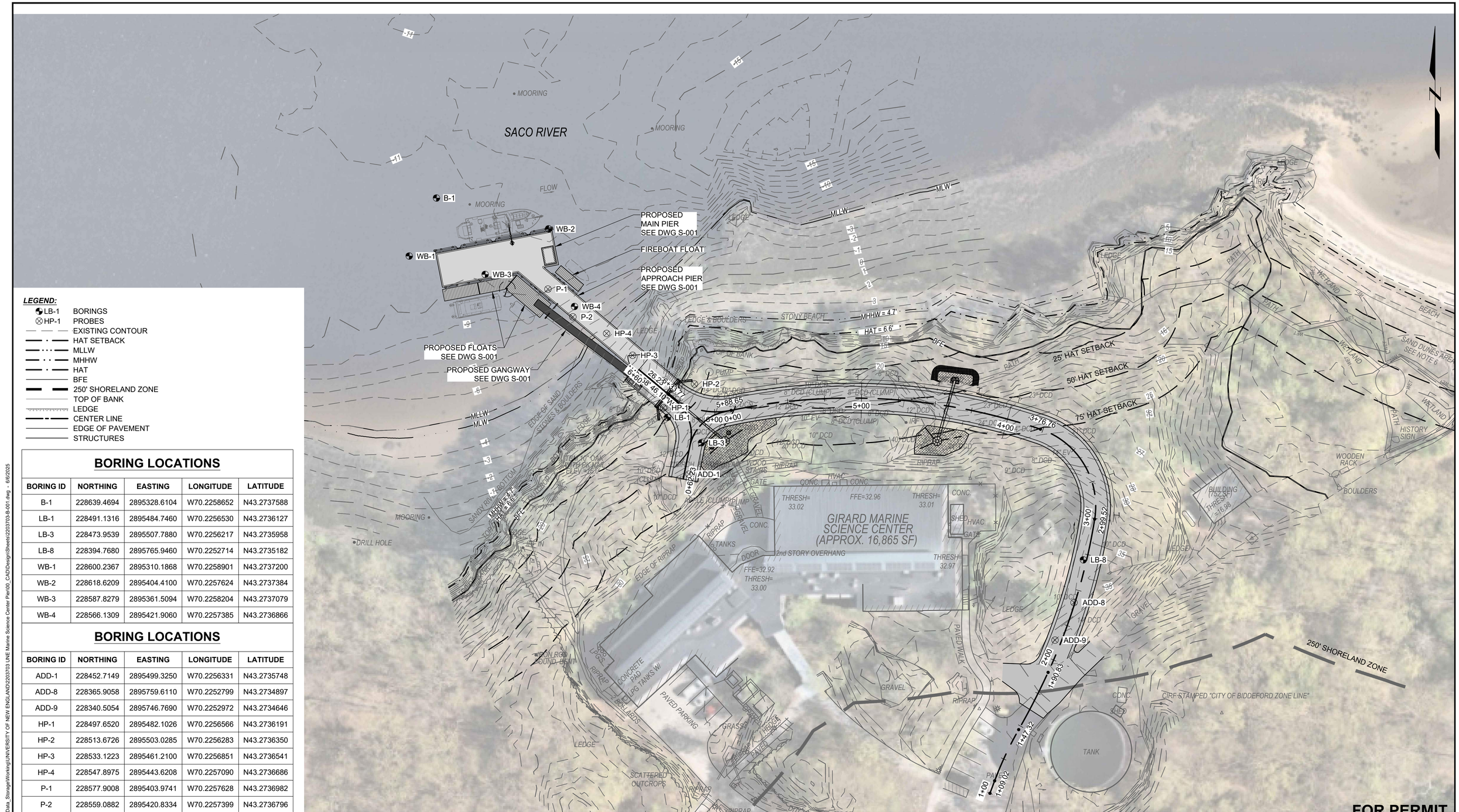

LEGEND:

- LB-1 BORINGS
- HP-1 PROBES
- EXISTING CONTOUR
- HAT SETBACK
- MLLW
- MHHW
- HAT
- BFE
- 250' SHORELAND ZONE
- TOP OF BANK
- LEDGE
- CENTER LINE
- EDGE OF PAVEMENT
- STRUCTURES

BORING LOCATIONS

BORING ID	NORTHING	EASTING	LONGITUDE	LATITUDE
B-1	228639.4694	2895328.6104	W70.2258652	N43.2737588
LB-1	228491.1316	2895484.7460	W70.2256530	N43.2736127
LB-3	228473.9539	2895507.7880	W70.2256217	N43.2735958
LB-8	228394.7680	2895765.9460	W70.2252714	N43.2735182
WB-1	228600.2367	2895310.1868	W70.2258901	N43.2737200
WB-2	228618.6209	2895404.4100	W70.2257624	N43.2737384
WB-3	228587.8279	2895361.5094	W70.2258204	N43.2737079
WB-4	228566.1309	2895421.9060	W70.2257385	N43.2736866

BORING LOCATIONS

BORING ID	NORTHING	EASTING	LONGITUDE	LATITUDE
ADD-1	228452.7149	2895499.3250	W70.2256331	N43.2735748
ADD-8	228365.9058	2895759.6110	W70.2252799	N43.2734897
ADD-9	228340.5054	2895746.7690	W70.2252972	N43.2734646
HP-1	228497.6520	2895482.1026	W70.2256566	N43.2736191
HP-2	228513.6726	2895503.0285	W70.2256283	N43.2736350
HP-3	228533.1223	2895461.2100	W70.2256851	N43.2736541
HP-4	228547.8975	2895443.6208	W70.2257090	N43.2736686
P-1	228577.9008	2895403.9741	W70.2257628	N43.2736982
P-2	228559.0882	2895420.8334	W70.2257399	N43.2736796

ELEVATION	MLLW	NAVD88*
BFE	+19.0	+14.0
HAT	+11.6	+6.6
MHHW	+9.7	+4.7
MHW	+9.3	+4.3
MSL	+4.8	-0.2
MLW	+0.3	-4.7
MLLW	0.0	-5.0

*PROJECT DATUM

Attention: 0 1"

If this scale bar does not measure 1" then drawing is not original scale.

STATE OF MAINE · BRIAN M. MCDEVITT · PE18260 · LICENSED PROFESSIONAL ENGINEER

6/9/2025

Designed:	DJB
Drawn:	JAM
Checked:	BJB
Approved:	BMM
P.E. No:	13033
GEI Project	2203703

GEI Consultants
GEI CONSULTANTS, INC.
5 MILK STREET
PORTLAND, ME 04101
(207)797-8901

UNE
UNIVERSITY OF NEW ENGLAND
11 HILLS BEACH RD.
BIDDEFORD, MAINE

UNIVERSITY OF NEW ENGLAND MARINE SCIENCE CENTER PIER

11 HILLS BEACH ROAD
BIDDEFORD, YORK COUNTY, MAINE

NO	DATE	ISSUE/REVISION	APP
8	6/5/2025	ADDRESS PB COMMENTS	DJB
7	4/16/2025	BIDDEFORD PERMIT APP.	DJB
6	9/17/2024	REVISED PERMIT SET	DJB
5	6/27/2024	REVISED PERMIT SET	DJB
4	9/14/2023	DEP PERMIT SET	DJB
3	6/28/2023	75% DESIGN SUBMISSION	DJB
2	2/15/2023	30% DESIGN SUBMISSION	DJB
1	12/9/2022	15% DESIGN SUB REV	DJB
0	11/11/2022	15% DESIGN SUBMISSION	DJB

SHEET NAME

BORING LOCATION PLAN

SHEET NO.

B-001

FOR PERMIT

DJCASTELNUOVO, VINNIE \\geiconsultants.com\data\Data_Storage\Working\UNIVERSITY OF NEW ENGLAND\2203703 UNE Marine Science Center Pier\00_CAD\Design\Sheets\2203703-B-001.dwg - 6/6/2025

TEST BORING LOG

GZA GeoEnvironmental, Inc. *Engineers and Scientists*

University of New England
Marine Science Center Pier
Biddeford, Maine

EXPLORATION NO.: B-1
SHEET: 1 of 3
PROJECT NO: 09.0025897.00
REVIEWED BY:

Logged By: B. Cardali
Drilling Co.: New England Boring
Foreman: Brad Enos

Type of Rig: Barge
Rig Model:
Drilling Method: Drive and Wash

Boring Location: See Plan
Ground Surface Elev. (ft.): ~10.6
Final Boring Depth (ft.): 65.8
Date Start - Finish: 11/9/2015 - 11/10/2015

H. Datum:
V. Datum: NAVD 88

Hammer Type: Safety
Hammer Weight (lb.): 140
Hammer Fall (in.): 30
Auger or Casing O.D./I.D Dia (in.):

Sampler Type: SS
Sampler O.D. (in.): 2.0
Sampler Length (in.): 24
Rock Core Size: NQ

Groundwater Depth (ft.)

Date	Time	Water Depth	Stab. Time

Depth (ft)	Casing Blows/ Core Rate	Sample No.	Sample Depth (ft.)	Sample Pen (in)	Sample Rec (in)	Sample Blows (per 6 in.)	SPT Value	Sample Description and Identification (Modified Burmister Procedure)	Remark	Field Test Data	Depth (ft)	Stratum Description	Elev. (ft.)
0													
		S-1	0-2	24	5	1 2 1 2	3	S-1: Very loose, brown, fine to coarse SAND, trace Silt.					
5		S-2	5-7	24	4	3 2 2 2	4	S-2: Loose, brown, fine to coarse SAND, trace Silt.					
10		S-3	10-12	24	3	1 2 2 2	4	S-3: Loose, brown, fine to coarse SAND, trace Silt.				SAND	
15		S-4	15-17	24	8	2 2 2 4	4	S-4: Loose, brown, fine to coarse SAND, trace Silt.					
20	OPEN	S-5	20-22	24	17	7 3 1 2	4	S-5: Medium Stiff, gray, Silty CLAY, little fine Sand.		1	19.5		-26.1
25		S-6	25-27	24	24	2 1 2 1	3	S-6: Soft, gray, Silty CLAY, little fine Sand.				SILTY CLAY	
30													

REMARKS

1 - 4" casing installed to 20.0' below mudline (bml), then wash ahead to 51.0' bml.

See Log Key for exploration of sample description and identification procedures. Stratification lines represent approximate boundaries between soil and bedrock types. Actual transitions may be gradual. Water level readings have been made at the times and under the conditions stated. Fluctuations of groundwater may occur due to other factors than those present at the times the measurements were made.

Exploration No.: B-1

GZA TEMPLATE TEST BORING, 12/7/2015, 1:02:01 PM

TEST BORING LOG

GZA GeoEnvironmental, Inc. *Engineers and Scientists*

University of New England
Marine Science Center Pier
Biddeford, Maine

EXPLORATION NO.: B-1
SHEET: 2 of 3
PROJECT NO: 09.0025897.00
REVIEWED BY:

Logged By: B. Cardali
Drilling Co.: New England Boring
Foreman: Brad Enos

Type of Rig: Barge
Rig Model:
Drilling Method: Drive and Wash

Boring Location: See Plan
Ground Surface Elev. (ft.): ~10.6
Final Boring Depth (ft.): 65.8
Date Start - Finish: 11/9/2015 - 11/10/2015

H. Datum:
V. Datum: NAVD 88

Hammer Type: Safety
Hammer Weight (lb.): 140
Hammer Fall (in.): 30
Auger or Casing O.D./I.D Dia (in.):

Sampler Type: SS
Sampler O.D. (in.): 2.0
Sampler Length (in.): 24
Rock Core Size: NQ

Groundwater Depth (ft.)

Date	Time	Water Depth	Stab. Time

Depth (ft)	Casing Blows/ Core Rate	Sample No.	Sample Depth (ft.)	Sample Pen (in)	Sample Rec (in)	Sample Blows (per 6 in.)	SPT Value	Sample Description and Identification (Modified Burmister Procedure)	Remark	Field Test Data	Depth (ft)	Stratum Description	Elev. (ft.)
35													
40		S-7	40-42	24	24	WOR WOR WOH WOH	0	S-7: Very soft, gray, Silty CLAY, trace fine Sand.				SILTY CLAY	
45											51		-41.6
50	16	S-8	51-53	24	8	18 6 15 29	21	S-8: Medium dense, gray, fine to coarse SAND, some Gravel, trace Silty Clay.		2		GLACIAL TILL	
55	13 30 26 27												
60	38 24 29 9	S-9	56-58	24	5	10 19 27 24	46	S-9: Dense, gray, GRAVEL, some fine to coarse Sand, trace Silty Clay.					

REMARKS

2 - Advanced 3" casing to 61.6' bml to core bedrock.

See Log Key for exploration of sample description and identification procedures. Stratification lines represent approximate boundaries between soil and bedrock types. Actual transitions may be gradual. Water level readings have been made at the times and under the conditions stated. Fluctuations of groundwater may occur due to other factors than those present at the times the measurements were made.

Exploration No.: B-1

GZA TEMPLATE TEST BORING, 12/7/2015, 1:02:01 PM

TEST BORING LOG

GZA GeoEnvironmental, Inc. *Engineers and Scientists*

University of New England
Marine Science Center Pier
Biddeford, Maine

EXPLORATION NO.: B-1
SHEET: 3 of 3
PROJECT NO: 09.0025897.00
REVIEWED BY:

Logged By: B. Cardali
Drilling Co.: New England Boring
Foreman: Brad Enos

Type of Rig: Barge
Rig Model:
Drilling Method: Drive and Wash

Boring Location: See Plan
Ground Surface Elev. (ft.): ~10.6
Final Boring Depth (ft.): 65.8
Date Start - Finish: 11/9/2015 - 11/10/2015

H. Datum:
V. Datum: NAVD 88

Hammer Type: Safety
Hammer Weight (lb.): 140
Hammer Fall (in.): 30
Auger or Casing O.D./I.D Dia (in.):

Sampler Type: SS
Sampler O.D. (in.): 2.0
Sampler Length (in.): 24
Rock Core Size: NQ

Groundwater Depth (ft.)

Date	Time	Water Depth	Stab. Time

Depth (ft)	Casing Blows/ Core Rate	Sample No.	Sample Depth (ft.)	Sample Pen (in)	Sample Rec (in)	Sample Blows (per 6 in.)	SPT Value	Sample Description and Identification (Modified Burmister Procedure)	Remark	Field Test Data	Depth (ft)	Stratum Description	Elev. (ft.)
60												GLACIAL TILL	
65		C-1	61.6-61.7	32	32			C-1: Hard, fresh, fine grained, gray, GNEISS. Joints are very close to closely spaced, moderately dipping, planar, rough, fresh to discolored. RQD = 31%	3		61.6		-73.0
		C-2	64.3-65.8	18	18			C-2: Hard, fresh, fine grained, gray, GNEISS. Joints are extremely close to closely spaced, moderately dipping to high angle, planar, rough to smooth, fresh to discolored. RQD = 0%				GNEISS	
70								End of exploration at 65.8 feet.			65.8		-74.4
75													
80													
85													
90													

REMARKS

3 - Casing refusal at 61.6' bml. Set up to core.

See Log Key for exploration of sample description and identification procedures. Stratification lines represent approximate boundaries between soil and bedrock types. Actual transitions may be gradual. Water level readings have been made at the times and under the conditions stated. Fluctuations of groundwater may occur due to other factors than those present at the times the measurements were made.

Exploration No.: B-1

GZA TEMPLATE TEST BORING, 12/7/2015, 1:02:01 PM

2015 BORING B-1

TEST BORING LOG

GZA GeoEnvironmental, Inc. *Engineers and Scientists*

University of New England
Marine Science Center Pier
Biddeford, Maine

EXPLORATION NO.: P-1
SHEET: 1 of 2
PROJECT NO: 09.0025897.00
REVIEWED BY:

Logged By: B Cardali
Drilling Co.: New England Boring
Foreman: Brad Enos

Type of Rig: Barge
Rig Model:
Drilling Method: Rod Probe

Boring Location: See Plan
Ground Surface Elev. (ft.): -10.2
Final Boring Depth (ft.): 52.3
Date Start - Finish: 11/10/2015 - 11/10/2015

H. Datum:
V. Datum: NAVD 88

Hammer Type: Safety
Hammer Weight (lb.): 300
Hammer Fall (in.): 24
Auger or Casing O.D./I.D Dia (in.):

Sampler Type:
Sampler O.D. (in.):
Sampler Length (in.):
Rock Core Size:

Groundwater Depth (ft.)

Date	Time	Water Depth	Stab. Time

Depth (ft)	Casing Blows/ Core Rate	Sample No.	Sample Depth (ft.)	Sample Pen (in)	Sample Rec (in)	Sample Blows (per 6 in.)	SPT Value	Sample Description and Identification (Modified Burmister Procedure)	Remark	Field Test Data	Depth (ft)	Stratum Description	Elev. (ft.)
0													
5												POSSIBLE SAND	
10													
15										1	17		-27.2
20												POSSIBLE SILTY CLAY	
25													
30													

REMARKS

1 - Possible transition to Silty Clay at approximately 17.0' below mudline (bml) (El. -26.9'), based on increased driving resistance to advance probe.

See Log Key for exploration of sample description and identification procedures. Stratification lines represent approximate boundaries between soil and bedrock types. Actual transitions may be gradual. Water level readings have been made at the times and under the conditions stated. Fluctuations of groundwater may occur due to other factors than those present at the times the measurements were made.

Exploration No.: P-1

GZA TEMPLATE TEST BORING, 12/7/2015, 1:02:02 PM

TEST BORING LOG

GZA GeoEnvironmental, Inc. *Engineers and Scientists*

University of New England
Marine Science Center Pier
Biddeford, Maine

EXPLORATION NO.: P-1
SHEET: 2 of 2
PROJECT NO: 09.0025897.00
REVIEWED BY:

Logged By: B Cardali
Drilling Co.: New England Boring
Foreman: Brad Enos

Type of Rig: Barge
Rig Model:
Drilling Method: Rod Probe

Boring Location: See Plan
Ground Surface Elev. (ft.): -10.2
Final Boring Depth (ft.): 52.3
Date Start - Finish: 11/10/2015 - 11/10/2015

H. Datum:
V. Datum: NAVD 88

Hammer Type: Safety
Hammer Weight (lb.): 300
Hammer Fall (in.): 24
Auger or Casing O.D./I.D Dia (in.):

Sampler Type:
Sampler O.D. (in.):
Sampler Length (in.):
Rock Core Size:

Groundwater Depth (ft.)

Date	Time	Water Depth	Stab. Time

Depth (ft)	Casing Blows/ Core Rate	Sample No.	Sample Depth (ft.)	Sample Pen (in)	Sample Rec (in)	Sample Blows (per 6 in.)	SPT Value	Sample Description and Identification (Modified Burmister Procedure)	Remark	Field Test Data	Depth (ft)	Stratum Description	Elev. (ft.)
35												POSSIBLE SILTY CLAY	
40										2	42		-42.2
45												POSSIBLE GLACIAL TILL	
50	50/3"									3	52.3		-52.5
55													
60													

REMARKS

2 - Possible transition to Glacial Till at approximately 42.0' bml (El. -51.9').
3 - Probe refusal at 52.3' bml (El. -62.2').

See Log Key for exploration of sample description and identification procedures. Stratification lines represent approximate boundaries between soil and bedrock types. Actual transitions may be gradual. Water level readings have been made at the times and under the conditions stated. Fluctuations of groundwater may occur due to other factors than those present at the times the measurements were made.

Exploration No.: P-1

GZA TEMPLATE TEST BORING, 12/7/2015, 1:02:04 PM

2015 PROBE P-1

TEST BORING LOG

GZA GeoEnvironmental, Inc. *Engineers and Scientists*

University of New England
Marine Science Center Pier
Biddeford, Maine

EXPLORATION NO.: P-2
SHEET: 1 of 2
PROJECT NO: 09.0025897.00
REVIEWED BY:

Logged By: B Cardali
Drilling Co.: New England Boring
Foreman: Brad Enos

Type of Rig: Barge
Rig Model:
Drilling Method: Rod Probe

Boring Location: See Plan
Ground Surface Elev. (ft.): -7.3
Final Boring Depth (ft.): 54.2
Date Start - Finish: 11/10/2015 - 11/10/2015

H. Datum:
V. Datum: NAVD 88

Hammer Type: Safety
Hammer Weight (lb.): 300
Hammer Fall (in.): 24
Auger or Casing O.D./I.D Dia (in.):

Sampler Type:
Sampler O.D. (in.):
Sampler Length (in.):
Rock Core Size:

Groundwater Depth (ft.)

Date	Time	Water Depth	Stab. Time

Depth (ft)	Casing Blows/ Core Rate	Sample No.	Sample Depth (ft.)	Sample Pen (in)	Sample Rec (in)	Sample Blows (per 6 in.)	SPT Value	Sample Description and Identification (Modified Burmister Procedure)	Remark	Field Test Data	Depth (ft)	Stratum Description	Elev. (ft.)
0													
5												POSSIBLE SAND	
10													
15													
20											20		-27.3
25												POSSIBLE SILTY CLAY	
30											30		-37.3

REMARKS

1 - Upon retrieval of probe rods, bottom 30' of rods was bent at an angle approximately 30-45 degrees off of the vertical indicating possible sloping rock at approximately 30.0' bml (El. 37.3').

See Log Key for exploration of sample description and identification procedures. Stratification lines represent approximate boundaries between soil and bedrock types. Actual transitions may be gradual. Water level readings have been made at the times and under the conditions stated. Fluctuations of groundwater may occur due to other factors than those present at the times the measurements were made.

Exploration No.: P-2

GZA TEMPLATE TEST BORING, 12/7/2015, 1:02:04 PM

TEST BORING LOG

GZA GeoEnvironmental, Inc. *Engineers and Scientists*

University of New England
Marine Science Center Pier
Biddeford, Maine

EXPLORATION NO.: P-2
SHEET: 2 of 2
PROJECT NO: 09.0025897.00
REVIEWED BY:

Logged By: B Cardali
Drilling Co.: New England Boring
Foreman: Brad Enos

Type of Rig: Barge
Rig Model:
Drilling Method: Rod Probe

Boring Location: See Plan
Ground Surface Elev. (ft.): -7.3
Final Boring Depth (ft.): 54.2
Date Start - Finish: 11/10/2015 - 11/10/2015

H. Datum:
V. Datum: NAVD 88

Hammer Type: Safety
Hammer Weight (lb.): 300
Hammer Fall (in.): 24
Auger or Casing O.D./I.D Dia (in.):

Sampler Type:
Sampler O.D. (in.):
Sampler Length (in.):
Rock Core Size:

Groundwater Depth (ft.)

Date	Time	Water Depth	Stab. Time

Depth (ft)	Casing Blows/ Core Rate	Sample No.	Sample Depth (ft.)	Sample Pen (in)	Sample Rec (in)	Sample Blows (per 6 in.)	SPT Value	Sample Description and Identification (Modified Burmister Procedure)	Remark	Field Test Data	Depth (ft)	Stratum Description	Elev. (ft.)
35													
40										2	54.2		-61.5
45													
50													
55	100/2"												
60													

REMARKS

2 - Probe refusal at 54.2' bml (El. -61.5').

See Log Key for exploration of sample description and identification procedures. Stratification lines represent approximate boundaries between soil and bedrock types. Actual transitions may be gradual. Water level readings have been made at the times and under the conditions stated. Fluctuations of groundwater may occur due to other factors than those present at the times the measurements were made.

Exploration No.: P-2

GZA TEMPLATE TEST BORING, 12/7/2015, 1:02:04 PM

2015 PROBE P-2

FOR PERMIT

ELEVATION	MLLW	NAVD88*
BFE	+19.0	+14.0
HAT	+11.6	+6.6
MHHW	+9.7	+4.7
MHW	+9.3	+4.3
MSL	+4.8	-0.2
MLW	+0.3	-4.7
MLLW	0.0	-5.0

*PROJECT DATUM

Attention:
0 1"
If this scale bar does not measure 1" then drawing is not original scale.

STATE OF MAINE
BRIAN M. MCDEVITT
PE18260
LICENSED
PROFESSIONAL ENGINEER
6/9/2025

Designed:	DJB
Drawn:	JAM
Checked:	BJB
Approved:	BMM
P.E. No:	13033
GEI Project	2203703

GEI Consultants
GEI CONSULTANTS, INC.
5 MILK STREET
PORTLAND, ME 04101
(207)797-8901

UNIVERSITY OF NEW ENGLAND
11 HILLS BEACH RD.
BIDDEFORD, MAINE

UNIVERSITY OF NEW ENGLAND MARINE SCIENCE CENTER PIER

11 HILLS BEACH ROAD
BIDDEFORD, YORK COUNTY, MAINE

NO	DATE	ISSUE/REVISION	APP
8	6/5/2025	ADDRESS PB COMMENTS	DJB
7	4/16/2025	BIDDEFORD PERMIT APP.	DJB
6	9/17/2024	REVISED PERMIT SET	DJB
5	6/27/2024	REVISED PERMIT SET	DJB
4	9/14/2023	DEP PERMIT SET	DJB
3	6/28/2023	75% DESIGN SUBMISSION	DJB
2	2/15/2023	30% DESIGN SUBMISSION	DJB
1	12/9/2022	15% DESIGN SUB REV	DJB
0	11/11/2022	15% DESIGN SUBMISSION	DJB

SHEET NAME
BORING LOGS (SHEET 1 OF 3)

SHEET NO.
B-002

DJCASTELNUOVO, VINNIE \\geiconsultants.com\data\Data_Storage\Working\UNIVERSITY OF NEW ENGLAND\2203703 UNE Marine Science Center Pier\00_CAD\Design\Sheets\2203703-B-002.dwg - 6/6/2025

BORING INFORMATION
NORTHING (ft): 228,600 | EASTING (ft): 2,895,310
GROUND SURFACE EL. (ft): -10.1 | DATE START/END: 12/12/2022 - 12/13/2022
VERT./HORZ. DATUMS: NAVD 88/NAD83 ME West Zone | DRILLING COMPANY: New England Boring
TOTAL DEPTH (ft): 70.0 | DRILLER NAME: B. Enos
LOGGED BY: K. Gleichauf | RIG TYPE: CME 21

BORING WB-1 — PAGE 1 of 3

DRILLING INFORMATION
HAMMER TYPE: Safety Hammer - rope and cathead | CASING I.D./O.D.: 4 inch/ 4.5 inch | CORE BARREL TYPE: NX
AUGER I.D./O.D.: NA / NA | DRILL ROD O.D.: NM | CORE BARREL I.D./O.D.: 1.8 inch / 3 inch
DRILLING METHOD: Drive and Wash/Open Hole
WATER LEVEL DEPTHS (ft): water boring

ABBREVIATIONS:
Pen. = Penetration Length; Rec. = Recovery Length; RQD = Rock Quality Designation (Sum of lengths of core pieces>4 in / Pen., %; WOH = Weight of Rods; WOH = Weight of Hammer
S = Split Spoon Sample; C = Core Sample; U = Undisturbed Sample; V = Vane Test; DP = Direct Push Sample; HSA = Hollow-Stem Auger
Qp = Pocket Penetrometer Strength; Sv = Pocket Torvane Shear Strength; LL = Liquid Limit; PL = Plastic Limit; PID = Photoionization Detector; I.D./O.D. = Inside Diameter/Outside Diameter
NA, NM = Not Applicable, Not Measured; Blows per 6 in. : 140-lb hammer falling 30 inches to drive a 2-inch-O.D. split spoon sampler.

Elev. (ft)	Depth (ft)	Sample No.	Sample Depth (ft)	Pen./ Rec. (in)	Blows per 6 in. or RQD	Drilling Remarks/ Field Test Data	Layer Name	Soil and Rock Description
	0	S1	0 to 2	24/2	WOR-WOH/18"		SAND/SILT	S1: NARROWLY GRADED GRAVEL WITH SAND (GP); ~80% coarse gravel (one piece), ~20% fine to coarse sand. Dark Gray.
	5	S2	5.5 to 7.5	24/9	5-3-4-6	Sand and shells in wash 0-5'.		S2: WIDELY GRADED SAND (SW); ~95% fine to coarse sand, ~5% nonplastic fines, gray. shells.
-20	10	S3	10.5 to 12.5	24/8	1-1-3-4	Sand and wood in wash 5.5-10.5'.		S3: WIDELY GRADED SAND (SW); Similar to S2.
	15	S4	15.5 to 17.5	24/9	3-4-2-WOH			S4: WIDELY GRADED SAND (SW); Similar to S2. pieces of wood.
-30	20	S5	20.5 to 22.5	24/24	2-1-1-2	Qp= 0.5 tsf (0-3') Sv= 2.5 tsf (0-3') Qp= 0.25 tsf (3-24") Sv= 1.5 tsf (3-24")	CLAY	S5: LEAN CLAY (CL); ~95% low plasticity fines, ~5% fine sand. Gray; Shells (0-10"). Sand seam at 20".

NOTES:
PROJECT NAME: UNE Marine Science Center Pier
CITY/STATE: Biddeford, Maine
GEI PROJECT NUMBER: 2203703

BORING WB-1 — PAGE 2 of 3

Elev. (ft)	Depth (ft)	Sample No.	Sample Depth (ft)	Pen./ Rec. (in)	Blows per 6 in. or RQD	Drilling Remarks/ Field Test Data	Layer Name	Soil and Rock Description
-40	25	S6	25.5 to 27.5	24/24	WOR-WOH/18"	Drove 4" casing to 25.5'. Drilled open hole 25.5-45.5'. Drilled with 3" casing from 45.5' to top of rock. Qp= 0.25 tsf Sv= 1.5 tsf	CLAY	S6: LEAN CLAY (CL); ~95% low plasticity fines, ~5% fine sand. Gray.
	30	S7	30.5 to 32.5	24/24	WOR/18"-2	Qp= 0.25 tsf Sv= 1.5 tsf		S7: LEAN CLAY (CL); Similar to S6.
-60	35	S8	35.5 to 37.5	24/24	WOR/18"-WOH	Qp= 0.25 tsf Sv= 1.5 tsf		S8: LEAN CLAY (CL); Similar to S6.
	40	S9	40.5 to 42.5	24/24	WOR/18"-WOH	Qp= 0.25 tsf Sv= 1.5 tsf		S9: LEAN CLAY (CL); Similar to S6.
-80	45	S10	45.5 to 47.5	24/24	WOR/18"-3	Qp= 0.5 tsf Sv= 1.5 tsf		S10: SANDY LEAN CLAY (CL); ~70% low plasticity fines, ~30% fine sand. Gray. Layered sand and clay.
	50	S11	50.5 to 52.5	24/4	14-14-16-22	Casing hard driving starting at 49.7'.	TILL	S11: CLAYEY GRAVEL WITH SAND (GC); ~50% fine to coarse gravel, ~30% fine to coarse sand, ~20% low plasticity fines. Gray.
	55							

NOTES:
PROJECT NAME: UNE Marine Science Center Pier
CITY/STATE: Biddeford, Maine
GEI PROJECT NUMBER: 2203703

BORING WB-1 — PAGE 3 of 3

Elev. (ft)	Depth (ft)	Sample No.	Sample Depth (ft)	Pen./ Rec. (in)	Blows per 6 in. or RQD	Drilling Remarks/ Field Test Data	Layer Name	Soil and Rock Description
-70	60	S12	55.5 to 57.4	11/6	37-50/5"		TILL	S11: WIDELY GRADED GRAVEL WITH SAND AND CLAY (GW-GC); ~60% fine to coarse gravel, ~30% fine to coarse sand, ~10% low plasticity fines. Gray.
		C1	57.4 to 59.3	35/35	0	Core Times (min/ft): 4-6-6/0.9' C1 jammed at 2.9'.		C1: GNEISS, Dark Gray with white banding, hard to med. hard. Slightly weathered (0-24"), highly weathered (24-35"). Joints at 75 to 90 degrees. Highly fractured.
-80	65	C2	59.3 to 60.8	18/18	0	Core Times (min/ft): 40.5'-10.5'-40.5' C2 jammed at 0.5, 1.5'.	ROCK	C2: GNEISS. Similar to C1. Highly weathered (0-10"), moderately weathered (10-18"), dissolved quartz bands.
	70	C3	60.8 to 65.8	60/60	71	Core Times (min/ft): 7/1.2'-2/0.8'-4-4/0.7'-2/0.3'-6 C3 jammed at 1.2, 3.7'.		C3: GNEISS, hard. Fresh throughout. joints spaced 1-19" at 0 to 60 degrees.
-90	75	C4	65.8 to 70	50/36	24	Core Times (min/ft): 6-5-5-3/1.2'		C4: GNEISS. Fresh (0-12"). Moderately weathered and highly fractured (12-36").
	80							Bottom of boring at depth 70 ft.
	85							

NOTES:
PROJECT NAME: UNE Marine Science Center Pier
CITY/STATE: Biddeford, Maine
GEI PROJECT NUMBER: 2203703

2022 BORING WB-1

BORING INFORMATION
NORTHING (ft): 228,619 | EASTING (ft): 2,895,396
GROUND SURFACE EL. (ft): -11.6 | DATE START/END: 12/7/2022 - 12/8/2022
VERT./HORZ. DATUMS: NAVD 88/NAD83 ME West Zone | DRILLING COMPANY: New England Boring
TOTAL DEPTH (ft): 68.4 | DRILLER NAME: B. Enos
LOGGED BY: K. Gleichauf | RIG TYPE: CME 21

BORING WB-2 — PAGE 1 of 3

DRILLING INFORMATION
HAMMER TYPE: Safety Hammer - rope and cathead | CASING I.D./O.D.: 4 inch/ 4.5 inch | CORE BARREL TYPE: NX
AUGER I.D./O.D.: NA / NA | DRILL ROD O.D.: NM | CORE BARREL I.D./O.D.: 1.8 inch / 3 inch
DRILLING METHOD: Drive and Wash/Open Hole
WATER LEVEL DEPTHS (ft): water boring

ABBREVIATIONS:
Pen. = Penetration Length; Rec. = Recovery Length; RQD = Rock Quality Designation (Sum of lengths of core pieces>4 in / Pen., %; WOH = Weight of Rods; WOH = Weight of Hammer
S = Split Spoon Sample; C = Core Sample; U = Undisturbed Sample; V = Vane Test; DP = Direct Push Sample; HSA = Hollow-Stem Auger
Qp = Pocket Penetrometer Strength; Sv = Pocket Torvane Shear Strength; LL = Liquid Limit; PL = Plastic Limit; PID = Photoionization Detector; I.D./O.D. = Inside Diameter/Outside Diameter
NA, NM = Not Applicable, Not Measured; Blows per 6 in. : 140-lb hammer falling 30 inches to drive a 2-inch-O.D. split spoon sampler.

Elev. (ft)	Depth (ft)	Sample No.	Sample Depth (ft)	Pen./ Rec. (in)	Blows per 6 in. or RQD	Drilling Remarks/ Field Test Data	Layer Name	Soil and Rock Description
	0	S1	0 to 2	24/0	WOH/12"-2-2		SAND/SILT	S1: No recovery. Redrove 3" spoon. S1 (redrive): WIDELY GRADED SAND (SW); ~95% fine to coarse sand, ~5% nonplastic fines. Gray. Shells.
	5	S2	4 to 6	24/5	6-4-4-9			S2: WIDELY GRADED SAND (SW); Similar to S1.
-20	10	S3	9 to 11	24/0	1-2-3-4			S3: No recovery. Redrove 3" spoon. S3 (redrive): No recovery. Probable loose sand. Split spoon returned clean. Sand and shells in wash.
	15	S4	14 to 16	24/0	1-2-2-3			S4: No Recovery. Redrove 3" spoon. S4 (redrive): NARROWLY GRADED GRAVEL (GP); ~100% coarse gravel. Probable wash material, gravel is clean.
-30	20	S5	19 to 21	24/11	10-7-6-28			S5: SANDY SILT (ML); ~ 60% nonplastic fines, ~40% fine sand. Gray. Traces of wood. Organic odor.
						Clay in wash. Driller noted reduced resistance.	CLAY	

NOTES:
PROJECT NAME: UNE Marine Science Center Pier
CITY/STATE: Biddeford, Maine
GEI PROJECT NUMBER: 2203703

BORING WB-2 — PAGE 2 of 3

Elev. (ft)	Depth (ft)	Sample No.	Sample Depth (ft)	Pen./ Rec. (in)	Blows per 6 in. or RQD	Drilling Remarks/ Field Test Data	Layer Name	Soil and Rock Description
-40	25	S6	24 to 26	24/24	WOH/18"-1	Qp=0.25 tsf Sv=0.05 tsf	CLAY	S6: LEAN CLAY (CL); ~100% low plasticity fines. Gray.
	30	S7	29 to 31	24/24	WOR-WOH/12"-3	Qp=0.25 tsf Sv=0.05 tsf		S7: LEAN CLAY (CL); ~95% low plasticity fines, ~5% fine sand. Gray. Sand seam in tip.
-60	35	S8	34 to 36	24/24	WOR/12"-WOH/12"	Drove 4" casing to 32'. Drilled open hole 32-44'. Drilled with 3" casing 44' to top of rock. Qp=0.25 tsf Sv=0.05 tsf		S8: LEAN CLAY (CL); Similar to S7.
	40	S9	39 to 41	24/24	WOH/12"-3-3			S9 (0-6"): SANDY SILT (ML); ~60% nonplastic fines, ~40% fine sand. Gray. S9 (6-13"): LEAN CLAY (CL): Similar to S8. S9 (13-19"): SANDY SILT (ML): Similar to (0-9"). S9 (19-24") LEAN CLAY (CL): Similar to S8.
-80	45	S10	44 to 46	24/16	10-14-8-5		TILL	S10: SILTY SAND (SM); ~75% fine sand, ~25% nonplastic fines. Gray. More silt (0-8") more sand (8-16").
	50	S11	49 to 51	24/22	6-10-13-33			S11: NARROWLY GRADED SAND with Silt (SP-SM); ~90% fine sand, ~10% nonplastic fines. Gray (0-10"), Gray/brown (10-22"). One piece of gravel at 18".
	55	S12	54 to 56	24/15	10-7-10-18			S12: NARROWLY GRADED SAND with Silt (SP-SM); Similar to S11. Gravel seam (3-5").

NOTES:
PROJECT NAME: UNE Marine Science Center Pier
CITY/STATE: Biddeford, Maine
GEI PROJECT NUMBER: 2203703

BORING WB-2 — PAGE 3 of 3

Elev. (ft)	Depth (ft)	Sample No.	Sample Depth (ft)	Pen./ Rec. (in)	Blows per 6 in. or RQD	Drilling Remarks/ Field Test Data	Layer Name	Soil and Rock Description
-70	60						TILL	
		C1	59 to 63.8	57/57	17	Core Times (min/ft): 2-2-2/0.7'-1/0.3'-4-5/0.6' C1 jammed at 2.7, 4.6'.		C1: GNEISS, hard, dark gray with white banding. Highly weathered (0-19"), slightly weathered (19-57"), joints spaced 0 to 5" at 30 to 75 degrees. weathering occurs in quartzy seams.
-80	65	C2	63.8 to 68.4	55/55	13	Core Times (min/ft): 2-2-1/0.6'-2-5 C2 jammed at 2.6, 4.6'.	ROCK	C2: GNEISS. Similar to C1. Slightly weathered (0-22"), highly weathered (22-31"), slightly weathered (31-55"). Weathering in quartz bands.
	70							Bottom of boring at depth 68.4 ft.
-90	75							
	80							
	85							

NOTES:
PROJECT NAME: UNE Marine Science Center Pier
CITY/STATE: Biddeford, Maine
GEI PROJECT NUMBER: 2203703

2022 BORING WB-2

ELEVATION	MLLW	NAVD88*
BFE	+19.0	+14.0
HAT	+11.6	+6.6
MHHW	+9.7	+4.7
MHW	+9.3	+4.3
MSL	+4.8	-0.2
MLW	+0.3	-4.7
MLLW	0.0	-5.0

*PROJECT DATUM

FOR PERMIT

Attention:
0 1"
If this scale bar does not measure 1" then drawing is not original scale.

STATE OF MAINE — BRIAN M. MCDEVITT — PE18260 — LICENSED — PROFESSIONAL ENGINEER
6/9/2025

Designed:	DJB
Drawn:	JAM
Checked:	BJB
Approved:	BMM
P.E. No:	13033
GEI Project	2203703

GEI Consultants
GEI CONSULTANTS, INC.
5 MILK STREET
PORTLAND, ME 04101
(207)797-8901

UNIVERSITY OF NEW ENGLAND
11 HILLS BEACH RD.
BIDDEFORD, MAINE

UNIVERSITY OF NEW ENGLAND MARINE SCIENCE CENTER PIER
11 HILLS BEACH ROAD
BIDDEFORD, YORK COUNTY, MAINE

NO	DATE	ISSUE/REVISION	APP
8	6/5/2025	ADDRESS PB COMMENTS	DJB
7	4/16/2025	BIDDEFORD PERMIT APP.	DJB
6	9/17/2024	REVISED PERMIT SET	DJB
5	6/27/2024	REVISED PERMIT SET	DJB
4	9/14/2023	DEP PERMIT SET	DJB
3	6/28/2023	75% DESIGN SUBMISSION	DJB
2	2/15/2023	30% DESIGN SUBMISSION	DJB
1	12/9/2022	15% DESIGN SUB REV	DJB
0	11/11/2022	15% DESIGN SUBMISSION	DJB

SHEET NAME
BORING LOGS (SHEET 2 OF 3)

SHEET NO.
B-003

DICASTELNUOVO, VINNIE \\geiconsultants.com\data\Data_Storage\Working\UNIVERSITY OF NEW ENGLAND\2203703 UNE Marine Science Center Pier\00_CAD\Design\Sheets\2203703-B-003.dwg - 6/6/2025

2022 BORING WB-3

BORING WB-3 — PAGE 1 of 3

BORING INFORMATION
NORTHING (ft): 228,591 — EASTING (ft): 2,895,359
GROUND SURFACE EL. (ft): -10.2 — DATE START/END: 12/9/2022 - 12/9/2022
VERT./HORIZ. DATUMS: NAVD 88/NAD83 ME West Zone — DRILLING COMPANY: New England Boring
TOTAL DEPTH (ft): 63.4 — DRILLER NAME: B. Enos
LOGGED BY: K. Gleichauf — RIG TYPE: CME 21

DRILLING INFORMATION
HAMMER TYPE: Safety Hammer - rope and cathead — CASING I.D./O.D.: 4 inch/ 4.5 inch — CORE BARREL TYPE: NX
AUGER I.D./O.D.: NA / NA — DRILL ROD O.D.: NM — CORE BARREL I.D./O.D.: 1.8 inch / 3 inch
DRILLING METHOD: Drive and Wash/Open Hole
WATER LEVEL DEPTHS (ft): water boring

ABBREVIATIONS: Pen. = Penetration Length; Rec. = Recovery Length; RQD = Rock Quality Designation = Length of Sound Cores>4 in / Pen.,%; WOR = Weight of Rods; WOH = Weight of Hammer; S = Split Spoon Sample; C = Core Sample; U = Undisturbed Sample; SC = Sonic Core; DP = Direct Push Sample; HSA = Hollow-Stem Auger; Qp = Pocket Penetrometer Strength; Sv = Pocket Torvane Shear Strength; LL = Liquid Limit; PI = Plasticity Index; PID = Photoionization Detector; I.D./O.D.= Inside Diameter/Outside Diameter; NA, NM = Not Applicable, Not Measured; Blows per 6 in.: 140-lb hammer falling 30 inches to drive a 2-inch-O.D. split spoon sampler.

Sample No.	Depth (ft)	Pen./Rec. (in)	Blows per 6 in. or RQD	Drilling Remarks/Field Test Data	Layer Name	Soil and Rock Description
S1	0 to 2	24/5	WOH/18"-1		SAND/SILT	S1: SILTY SAND (SM); ~80% fine to coarse sand, ~20% nonplastic/organic fines. Gray. wood. organic odor.
S2	3 to 5	24/9	2-1-2-3		SAND/SILT	S2: WIDELY GRADED SAND (SW); ~100% fine to coarse sand. Gray. organic odor.
S3	8 to 10	24/12	1-2-3-4		SAND/SILT	S3: WIDELY GRADED SAND (SW); Similar to S2. Shells.
S4	13 to 15	24/7	1-2-3-6		SAND/SILT	S4: NARROWLY GRADED SAND (SP); ~100% coarse sand. Gray. shells.
S5	18 to 20	24/12	9-4-8-8		SAND/SILT	S5: SILTY SAND (SM); ~65% fine sand, ~25% nonplastic fines, ~10% fine to coarse gravel. wood. shells.
S6	23 to	24/24	WOR-	clay in wash at 22'. Qp<0.25 tsf Sv=0.05 tsf	CLAY	S6: LEAN CLAY (CL); ~95% low plasticity fines, ~5% fine sand. Gray. Sand seams (8-9"), (19-20").

NOTES:
PROJECT NAME: UNE Marine Science Center Pier
CITY/STATE: Biddeford, Maine
GEI PROJECT NUMBER: 2203703
GEI WOBURN STD 5-NORTH-EAST-LAYER NAME 2203703 UNE PIER TYPED LOGS.GPJ 1/19/23

BORING WB-3 — PAGE 2 of 3

NORTHING (ft): 228,591 — EASTING (ft): 2,895,359
GROUND SURFACE EL. (ft): -10.2 — DATE START/END: 12/9/2022 - 12/9/2022
VERT./HORIZ. DATUMS: NAVD 88/NAD83 ME West Zone — DRILLING COMPANY: New England Boring

Sample No.	Depth (ft)	Pen./Rec. (in)	Blows per 6 in. or RQD	Drilling Remarks/Field Test Data	Layer Name	Soil and Rock Description
	25		1/12"-1		CLAY	
S7	28 to 30	24/24	WOR/12"-WOH-1	drove 4" casing to 28'. Drilled open hole 28-48. Drilled with 3" casing 48' to top of rock.Qp<0.25 tsf Sv=0.05 tsf	CLAY	S7: LEAN CLAY (CL); Similar to S6.
S8	33 to 35	24/24	WOR/12"-WOH-2	Qp<0.25 tsf Sv=0.05 tsf	CLAY	S8: LEAN CLAY (CL) Similar to S6.
S9	38 to 40	24/24	WOR/12"-WOH-2	Qp<0.25 tsf Sv=0.05 tsf	CLAY	S9: LEAN CLAY (CL); Similar to S6. Fine sand seams (6-8"), (20-24").
S10	43 to 45	24/24	WOR-1/12"-4		CLAY	S10 (0-6"): LEAN CLAY (CL); Similar to S6. S10(6-24"): CLAYEY SAND (SC); ~75% fine sand, ~25% low plasticity fines. Gray. Brown (20-24").
S11	48 to 50	24/5	45-29-14-15		TILL	S11: CLAYEY SAND with Gravel (SC); ~50% fine sand, ~30% fine to coarse gravel up to 1.25", ~20% low plasticity fines. Gray.
S12	53 to 53.3	4/4	50/4"	casing refusal at 53.3'.Core Times (min/ft): 4-2/0.2' C1 jammed at 1.2'.	TILL	S12: NARROWLY GRADED GRAVEL with Sand (GP); ~75% coarse gravel, ~20% fine to coarse sand, ~5% nonplastic fines. Gray/Brown.
C1	53.3	15/15	33		ROCK	C1: GNEISS, hard, dark gray. Slightly weathered. joints spaced 0-5" at 60 to 90 degrees.
C2	to	60/57	88		ROCK	

NOTES:
PROJECT NAME: UNE Marine Science Center Pier
CITY/STATE: Biddeford, Maine
GEI PROJECT NUMBER: 2203703
GEI WOBURN STD 5-NORTH-EAST-LAYER NAME 2203703 UNE PIER TYPED LOGS.GPJ 1/19/23

BORING WB-3 — PAGE 3 of 3

NORTHING (ft): 228,591 — EASTING (ft): 2,895,359
GROUND SURFACE EL. (ft): -10.2 — DATE START/END: 12/9/2022 - 12/9/2022
VERT./HORIZ. DATUMS: NAVD 88/NAD83 ME West Zone — DRILLING COMPANY: New England Boring

Sample No.	Depth (ft)	Pen./Rec. (in)	Blows per 6 in. or RQD	Drilling Remarks/Field Test Data	Layer Name	Soil and Rock Description
	54.6 / 54.6 to 59.6			Core Times (min/ft): 2-2-3-3-4	ROCK	C2: GNEISS, hard, dark gray with white banding. fresh throughout. joints spaced 3-12" at 60 degrees. calcite seam horizontal at 48".
C3	59.6 to 63.4	45/48	31	Core Times (min/ft):2-3-2/0.2'-3-2/0.6' C3 jammed at 2.2'.	ROCK	C3: GNEISS, hard, dark gray. fresh throughout. joints spaced 1-5" at 60 degrees. Horizontal calcite seam at 15". Highly fractured (23-25").
						Bottom of boring at depth 63.4 ft.

NOTES:
PROJECT NAME: UNE Marine Science Center Pier
CITY/STATE: Biddeford, Maine
GEI PROJECT NUMBER: 2203703
GEI WOBURN STD 5-NORTH-EAST-LAYER NAME 2203703 UNE PIER TYPED LOGS.GPJ 1/19/23

2022 BORING WB-3

2022 BORING WB-4

BORING WB-4 — PAGE 1 of 2

BORING INFORMATION
NORTHING (ft): 228,566 — EASTING (ft): 2,895,422
GROUND SURFACE EL. (ft): -8.3 — DATE START/END: 12/6/2022 - 12/6/2022
VERT./HORIZ. DATUMS: NAVD 88/NAD83 ME West Zone — DRILLING COMPANY: New England Boring
TOTAL DEPTH (ft): 46.7 — DRILLER NAME: B. Enos
LOGGED BY: K. Gleichauf — RIG TYPE: CME 21

DRILLING INFORMATION
HAMMER TYPE: Safety Hammer - rope and cathead — CASING I.D./O.D.: 4 inch/ 4.5 inch — CORE BARREL TYPE: NX
AUGER I.D./O.D.: NA / NA — DRILL ROD O.D.: NM — CORE BARREL I.D./O.D.: 1.8 inch / 3 inch
DRILLING METHOD: Drive and Wash/Open Hole
WATER LEVEL DEPTHS (ft): water boring

ABBREVIATIONS: (as above)

Sample No.	Depth (ft)	Pen./Rec. (in)	Blows per 6 in. or RQD	Drilling Remarks/Field Test Data	Layer Name	Soil and Rock Description
S1	0 to 2	24/4	WOR/12"-WOH/12"		SAND/SILT	S1: SILTY SAND (SM); ~60% fine to coarse sand, ~35% organic fines, ~5% fine gravel. Gray. Shells. Wood. Organic odor.
S2	5 to 7	24/4	1-1-1/12"	Casing increased resistance at 7.5'.	SAND/SILT	S2: SILTY SAND (SM); Similar to S1.
S3	10 to 12	24/15	9-4-1/12"		SAND/SILT	S3: SANDY SILT (ML); ~60% nonplastic fines, ~40% fine to coarse sand. Gray. Shells. (0-7") mostly fine sand, (7-15") fine to coarse sand. Organic odor.
S4	15 to 17	24/0	WOH-1/12"-1		SAND/SILT	S4: No recovery. Redrove 3" spoon. S4 (redrive): SANDY SILT (ML); Similar to S3. One ~2.5" piece of gravel on top. Wood. Shells.
S5	20 to 22	24/24	1/24"	Qp<0.25 tsf Sv=0.05 tsf	CLAY	S5: LEAN CLAY (CL); ~95% low plasticity fines, ~5% fine sand. Gray.

NOTES:
PROJECT NAME: UNE Marine Science Center Pier
CITY/STATE: Biddeford, Maine
GEI PROJECT NUMBER: 2203703
GEI WOBURN STD 5-NORTH-EAST-LAYER NAME 2203703 UNE PIER TYPED LOGS.GPJ 1/19/23

BORING WB-4 — PAGE 2 of 2

NORTHING (ft): 228,566 — EASTING (ft): 2,895,422
GROUND SURFACE EL. (ft): -8.3 — DATE START/END: 12/6/2022 - 12/6/2022
VERT./HORIZ. DATUMS: NAVD 88/NAD83 ME West Zone — DRILLING COMPANY: New England Boring

Sample No.	Depth (ft)	Pen./Rec. (in)	Blows per 6 in. or RQD	Drilling Remarks/Field Test Data	Layer Name	Soil and Rock Description
S6	25 to 27	24/4	1-1-2-4	Qp<0.25 tsf Sv=0.05 tsf	CLAY	S6: LEAN CLAY (CL); Similar to S5.
S7	30 to 32	24/24	5-2-2-1	Qp<0.25 tsf Sv=0.05 tsf	CLAY	S7: LEAN CLAY (CL); Similar to S5. Some gravel seams.
S8	35 to 36.7	20/9	WOR/18"-50/2"	Qp<0.25 tsf Sv=0.05 tsf	CLAY	S8: LEAN CLAY (CL); Similar to S5.
C1	36.7 to 39.7	36/31	14	Core Times (min/ft): 4-6-6 C1 jammed at 3'.	ROCK	C1: GNEISS, hard, dark gray/green. Slightly weathered. Joints spaced 0-5" at 0-90 degrees.
C2	39.7 to 42.4	32/37	94	Core Times (min/ft): 3-6-4/0.7'	ROCK	C2: GNEISS. Similar to C1. Joints spaced 1-18".
C3	42.4 to 43.2	9/9	0	Core Times (min/ft): 5/0.7'	ROCK	C3: GNEISS. Similar to C1. Highly fractured.
C4	43.1 to 44.7	19/19	26	Core Times (min/ft): 5-5/0.6'	ROCK	C4: GNEISS, hard, dark gray/black with white banding. Slightly weathered. Joints spaced 0-5" at 75 degrees.
C5	44.7 to 46.7	24/24	38	Core Times (min/ft): 5-8	ROCK	C5: GNEISS. Similar to C4.
						Bottom of boring at depth 46.7 ft.

NOTES:
PROJECT NAME: UNE Marine Science Center Pier
CITY/STATE: Biddeford, Maine
GEI PROJECT NUMBER: 2203703
GEI WOBURN STD 5-NORTH-EAST-LAYER NAME 2203703 UNE PIER TYPED LOGS.GPJ 1/19/23

2022 BORING WB-4

2023 BORING LB-1

BORING LB-1 — PAGE 1 of 1

BORING INFORMATION
LOCATION: Proposed Pier Near Shore
GROUND SURFACE EL. (ft): NM — DATE START/END: 3/9/2023 - 3/9/2023
VERTICAL DATUM: — DRILLING COMPANY: New England Boring
TOTAL DEPTH (ft): 8.5 — DRILLER NAME: Mike M.
LOGGED BY: D. Pelletier — RIG TYPE: M1 ATV

DRILLING INFORMATION
HAMMER TYPE: Manual — CASING I.D./O.D.: 4 inch / NA — CORE BARREL TYPE:
AUGER I.D./O.D.: NA / NA — DRILL ROD O.D.: NM — CORE BARREL I.D./O.D. NA / NA
DRILLING METHOD: Drive and Wash
WATER LEVEL DEPTHS (ft): Not measured

ABBREVIATIONS: (as above)

Sample No.	Depth (ft)	Pen./Rec. (in)	Blows per 6 in. or RQD	Drilling Remarks/Field Test Data	Layer Name	Soil and Rock Description
S1	0 to 2	24/4	3-3-5-13			S1: SANDY ORGANIC SOIL (OL), 60% nonplastic fines, 40% fine sand, dark brown, organic topsoil.
S2	2 to 2.2	2/2	50/0.25	Ledge at 2.2 ft. Switch to Drive and Wash. Rollerbit to 3 ft.		S2: WIDELY GRADED GRAVEL WITH SAND (GP), 85% angular gravel, 10% fine to coarse sand, 5% nonplastic fines, dark gray (WEATHERED BEDROCK).
C1	3 to 7	48/40	10			C1: GNEISS, hard, metamorphic, fine-grained, joints slightly to moderately weathered, close, some cavaties throughout, gray. RQD 10% MPF 10-11-12-15
C2	7 to 8.5	18/16	50			C2: GNEISS, hard, metamorphic, fine-grained, joints slightly to moderately weathered, very close except 0-9 inches one piece, gray. RQD 50% MPF 18-11
						Finished hole at 5.5 ft. coring (8.5 ft. depth) due to time constraints.

NOTES:
PROJECT NAME: UNE Marine Science Center Pier
CITY/STATE: Biddeford, ME
GEI PROJECT NUMBER: 2203703
GEI WOBURN STD 1-LOCATION-LAYER NAME UNE BORING LOGS.GPJ 4/3/23

2023 BORING LB-1

2023 BORING LB-3

BORING LB-3 — PAGE 1 of 1

BORING INFORMATION
LOCATION: Near Stairway
GROUND SURFACE EL. (ft): NM — DATE START/END: 3/9/2023 - 3/9/2023
VERTICAL DATUM: — DRILLING COMPANY: New England Boring
TOTAL DEPTH (ft): 1.2 — DRILLER NAME: Mike M.
LOGGED BY: D. Pelletier — RIG TYPE: M1 ATV

DRILLING INFORMATION
HAMMER TYPE: Manual — CASING I.D./O.D.: 4 inch / NA — CORE BARREL TYPE:
AUGER I.D./O.D.: NA / NA — DRILL ROD O.D.: NM — CORE BARREL I.D./O.D. NA / NA
DRILLING METHOD: Drive and Wash
WATER LEVEL DEPTHS (ft): Not measured

ABBREVIATIONS: (as above)

Sample No.	Depth (ft)	Pen./Rec. (in)	Blows per 6 in. or RQD	Drilling Remarks/Field Test Data	Layer Name	Soil and Rock Description
S1	0 to 1.2	14/6	2-8-50/2"			S1: SANDY ORGANIC SOIL (OL), 60% nonplastic fines, 40% fine sand, dark brown, organic topsoil.
						Bottom of boring at depth 1.2 ft.

NOTES:
PROJECT NAME: UNE Marine Science Center Pier
CITY/STATE: Biddeford, ME
GEI PROJECT NUMBER: 2203703
GEI WOBURN STD 1-LOCATION-LAYER NAME UNE BORING LOGS.GPJ 4/3/23

2023 BORING LB-3

FOR PERMIT

ELEVATION	MLLW	NAVD88*
BFE	+19.0	+14.0
HAT	+11.6	+6.6
MHHW	+9.7	+4.7
MHW	+9.3	+4.3
MSL	+4.8	-0.2
MLW	+0.3	-4.7
MLLW	0.0	-5.0

*PROJECT DATUM

Attention: 0 — 1"
If this scale bar does not measure 1" then drawing is not original scale.

STATE OF MAINE — BRIAN M. MCDEVITT — PE18260 — LICENSED PROFESSIONAL ENGINEER
6/9/2025

Designed:	DJB
Drawn:	JAM
Checked:	BJB
Approved:	BMM
P.E. No:	13033
GEI Project	2203703

GEI Consultants
GEI CONSULTANTS, INC.
5 MILK STREET
PORTLAND, ME 04101
(207)797-8901

UNE
UNIVERSITY OF NEW ENGLAND
11 HILLS BEACH RD.
BIDDEFORD, MAINE

UNIVERSITY OF NEW ENGLAND MARINE SCIENCE CENTER PIER
11 HILLS BEACH ROAD
BIDDEFORD, YORK COUNTY, MAINE

NO	DATE	ISSUE/REVISION	APP
8	6/5/2025	ADDRESS PB COMMENTS	DJB
7	4/16/2025	BIDDEFORD PERMIT APP.	DJB
6	9/17/2024	REVISED PERMIT SET	DJB
5	6/27/2024	REVISED PERMIT SET	DJB
4	9/14/2023	DEP PERMIT SET	DJB
3	6/28/2023	75% DESIGN SUBMISSION	DJB
2	2/15/2023	30% DESIGN SUBMISSION	DJB
1	12/9/2022	15% DESIGN SUB REV	DJB
0	11/11/2022	15% DESIGN SUBMISSION	DJB

SHEET NAME: **BORING LOGS (SHEET 3 OF 3)**
SHEET NO.: **B-004**

DICASTELNUOVO, VINNIE \\geiconsultants.com\data\Data_Storage\Working\UNIVERSITY OF NEW ENGLAND\2203703 UNE Marine Science Center Pier\00_CAD\Design\Sheets\2203703-B-004.dwg - 6/6/2025

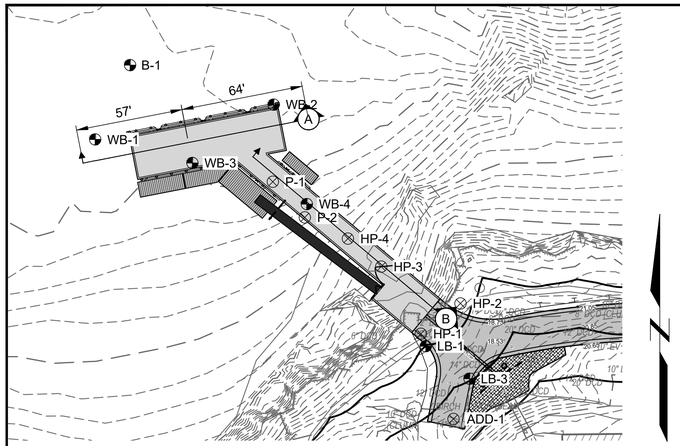

KEY PLAN
SCALE: 1" = 40'

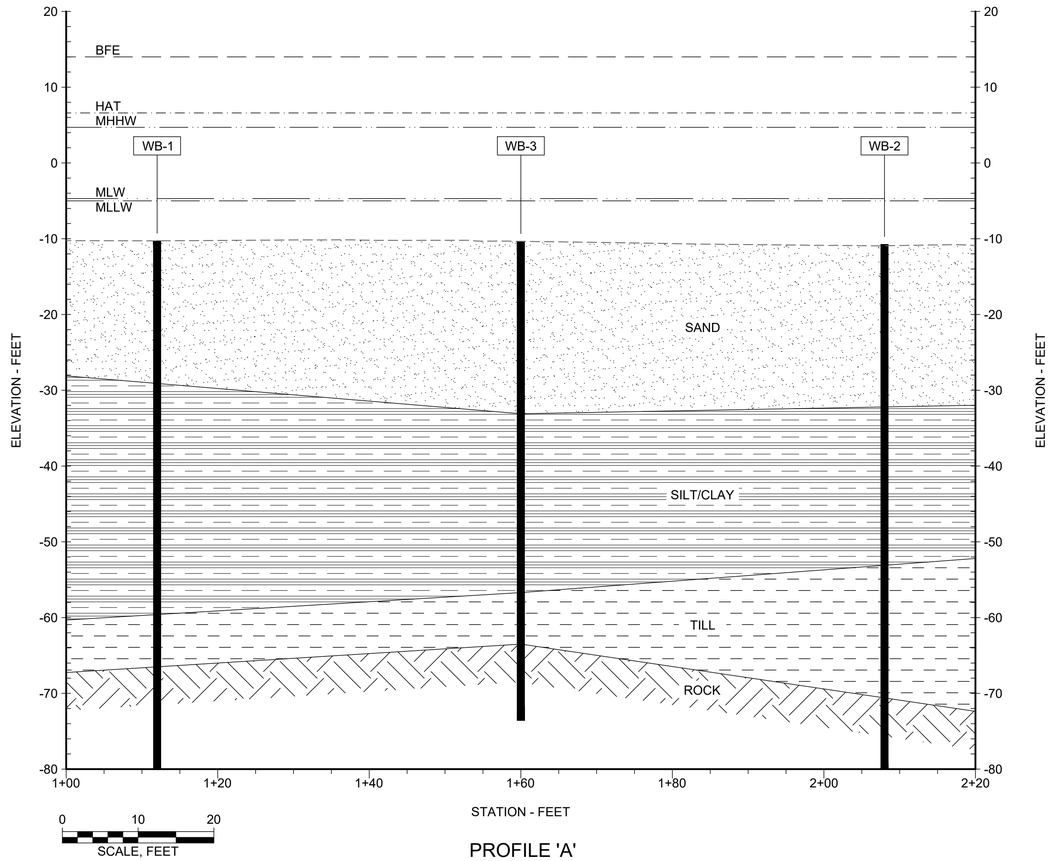

PROFILE 'A'
SCALE: 1" = 10'

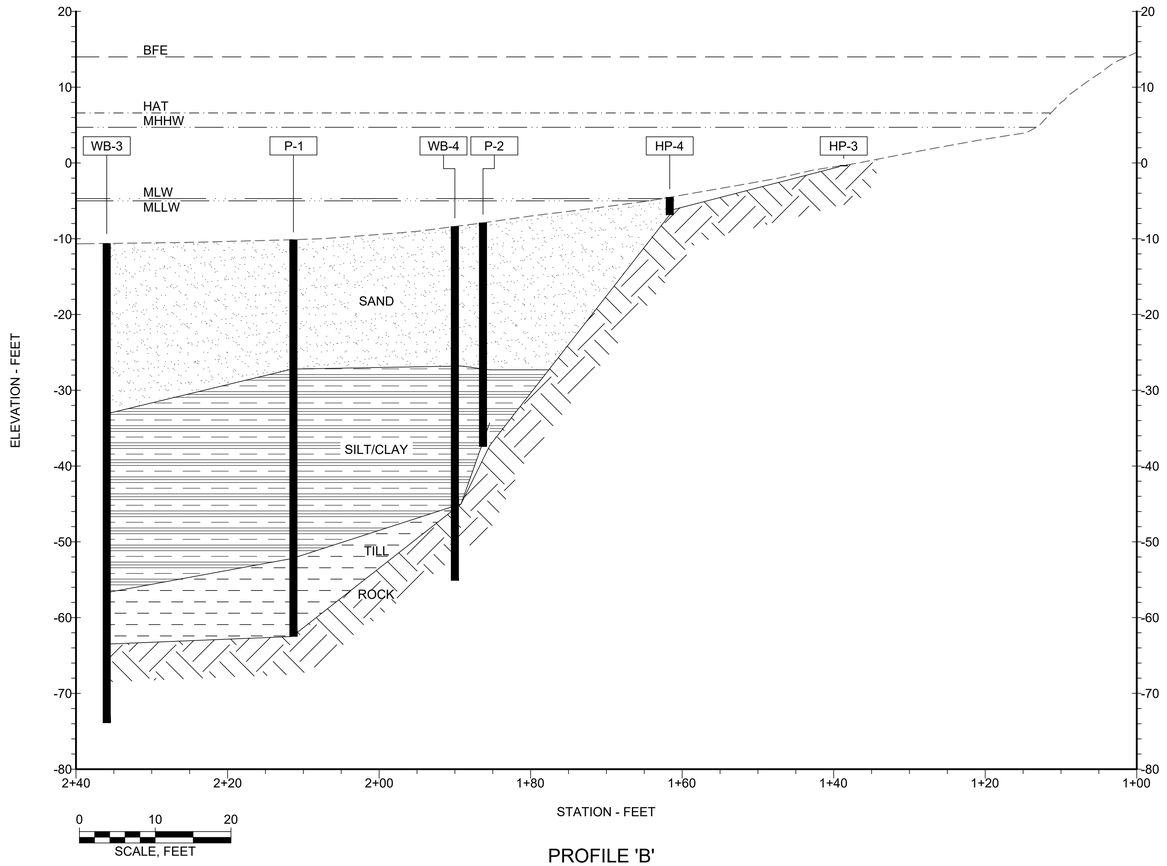

PROFILE 'B'
SCALE: 1" = 10'

FOR PERMIT

ELEVATION	MLLW	NAVD88*
BFE	+19.0	+14.0
HAT	+11.6	+6.6
MHHW	+9.7	+4.7
MHW	+9.3	+4.3
MSL	+4.8	-0.2
MLW	+0.3	-4.7
MLLW	0.0	-5.0

*PROJECT DATUM

Attention:
0 1"
If this scale bar does not measure 1" then drawing is not original scale.

STATE OF MAINE
BRIAN M. MCDEVITT
PE18260
LICENSED
PROFESSIONAL ENGINEER
6/9/2025

Designed:	DJB
Drawn:	JAM
Checked:	BJB
Approved:	BMM
P.E. No:	13033
GEI Project	2203703

GEI Consultants
GEI CONSULTANTS, INC.
5 MILK STREET
PORTLAND, ME 04101
(207)797-8901

UNIVERSITY OF NEW ENGLAND
11 HILLS BEACH RD.
BIDDEFORD, MAINE

UNIVERSITY OF NEW ENGLAND MARINE SCIENCE CENTER PIER

11 HILLS BEACH ROAD
BIDDEFORD, YORK COUNTY, MAINE

NO	DATE	ISSUE/REVISION	APP
8	6/5/2025	ADDRESS PB COMMENTS	DJB
7	4/16/2025	BIDDEFORD PERMIT APP.	DJB
6	9/17/2024	REVISED PERMIT SET	DJB
5	6/27/2024	REVISED PERMIT SET	DJB
4	9/14/2023	DEP PERMIT SET	DJB
3	6/28/2023	75% DESIGN SUBMISSION	DJB
2	2/15/2023	30% DESIGN SUBMISSION	DJB
1	12/9/2022	15% DESIGN SUB REV	DJB
0	11/11/2022	15% DESIGN SUBMISSION	DJB

SHEET NAME
INTERPRETIVE SUBSURFACE PROFILE

SHEET NO.
B-005

DICASTELNUOVO, VINNIE \\geiconsultants.com\data\Data_Storage\Working\UNIVERSITY OF NEW ENGLAND\2203703 UNE Marine Science Center Pier\00_CAD\Design\Sheets\2203703-B-005.dwg - 6/6/2025

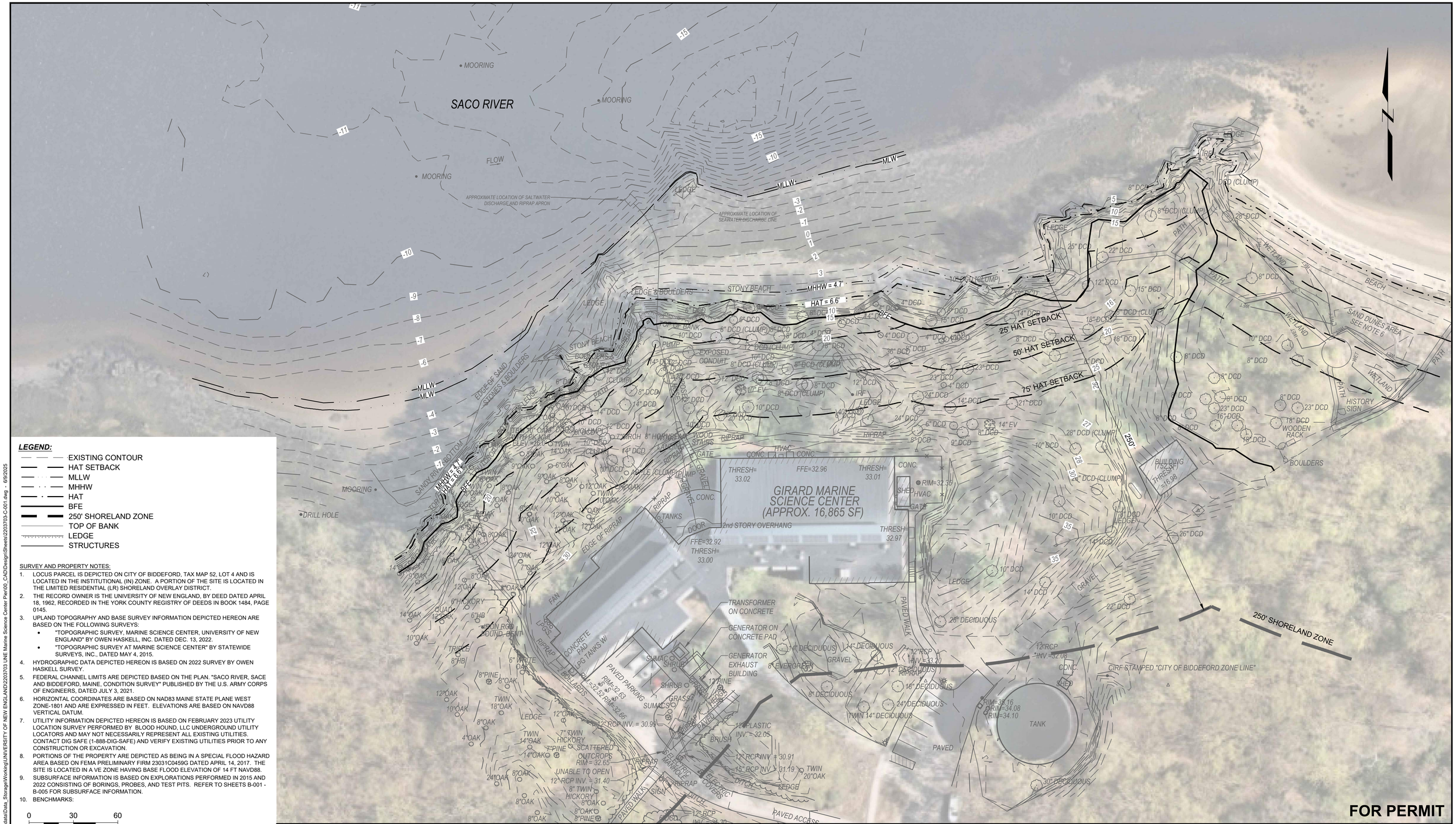

FOR PERMIT

LEGEND:

- EXISTING CONTOUR
- HAT SETBACK
- MLLW
- MHHW
- HAT
- BFE
- 250' SHORELAND ZONE
- TOP OF BANK
- LEDGE
- STRUCTURES

SURVEY AND PROPERTY NOTES:

1. LOCUS PARCEL IS DEPICTED ON CITY OF BIDDEFORD, TAX MAP 52, LOT 4 AND IS LOCATED IN THE INSTITUTIONAL (IN) ZONE. A PORTION OF THE SITE IS LOCATED IN THE LIMITED RESIDENTIAL (LR) SHORELAND OVERLAY DISTRICT.
2. THE RECORD OWNER IS THE UNIVERSITY OF NEW ENGLAND, BY DEED DATED APRIL 18, 1962, RECORDED IN THE YORK COUNTY REGISTRY OF DEEDS IN BOOK 1484, PAGE 0145.
3. UPLAND TOPOGRAPHY AND BASE SURVEY INFORMATION DEPICTED HEREON ARE BASED ON THE FOLLOWING SURVEYS:
   - "TOPOGRAPHIC SURVEY, MARINE SCIENCE CENTER, UNIVERSITY OF NEW ENGLAND" BY OWEN HASKELL, INC. DATED DEC. 13, 2022.
   - "TOPOGRAPHIC SURVEY AT MARINE SCIENCE CENTER" BY STATEWIDE SURVEYS, INC., DATED MAY 4, 2015.
4. HYDROGRAPHIC DATA DEPICTED HEREON IS BASED ON 2022 SURVEY BY OWEN HASKELL SURVEY.
5. FEDERAL CHANNEL LIMITS ARE DEPICTED BASED ON THE PLAN. "SACO RIVER, SACE AND BIDDEFORD, MAINE, CONDITION SURVEY" PUBLISHED BY THE U.S. ARMY CORPS OF ENGINEERS, DATED JULY 3, 2021.
6. HORIZONTAL COORDINATES ARE BASED ON NAD83 MAINE STATE PLANE WEST ZONE-1801 AND ARE EXPRESSED IN FEET. ELEVATIONS ARE BASED ON NAVD88 VERTICAL DATUM.
7. UTILITY INFORMATION DEPICTED HEREON IS BASED ON FEBRUARY 2023 UTILITY LOCATION SURVEY PERFORMED BY BLOOD HOUND, LLC UNDERGROUND UTILITY LOCATORS AND MAY NOT NECESSARILY REPRESENT ALL EXISTING UTILITIES. CONTACT DIG SAFE (1-888-DIG-SAFE) AND VERIFY EXISTING UTILITIES PRIOR TO ANY CONSTRUCTION OR EXCAVATION.
8. PORTIONS OF THE PROPERTY ARE DEPICTED AS BEING IN A SPECIAL FLOOD HAZARD AREA BASED ON FEMA PRELIMINARY FIRM 23031C0459G DATED APRIL 14, 2017. THE SITE IS LOCATED IN A VE ZONE HAVING BASE FLOOD ELEVATION OF 14 FT NAVD88.
9. SUBSURFACE INFORMATION IS BASED ON EXPLORATIONS PERFORMED IN 2015 AND 2022 CONSISTING OF BORINGS, PROBES, AND TEST PITS. REFER TO SHEETS B-001 - B-005 FOR SUBSURFACE INFORMATION.
10. BENCHMARKS:

0 30 60
SCALE, FEET

ELEVATION	MLLW	NAVD88*
BFE	+19.0	+14.0
HAT	+11.6	+6.6
MHHW	+9.7	+4.7
MHW	+9.3	+4.3
MSL	+4.8	-0.2
MLW	+0.3	-4.7
MLLW	0.0	-5.0

*PROJECT DATUM

Attention:
0 1"
If this scale bar does not measure 1" then drawing is not original scale.

STATE OF MAINE
BRIAN M. MCDEVITT
PE18260
LICENSED
PROFESSIONAL ENGINEER
6/9/2025

Designed:	DJB
Drawn:	JAM
Checked:	BJB
Approved:	BMM
P.E. No:	13033
GEI Project	2203703

GEI Consultants
GEI CONSULTANTS, INC.
5 MILK STREET
PORTLAND, ME 04101
(207)797-8901

UNE
UNIVERSITY OF NEW ENGLAND
11 HILLS BEACH RD.
BIDDEFORD, MAINE

UNIVERSITY OF NEW ENGLAND MARINE SCIENCE CENTER PIER

11 HILLS BEACH ROAD
BIDDEFORD, YORK COUNTY, MAINE

NO	DATE	ISSUE/REVISION	APP
8	6/5/2025	ADDRESS PB COMMENTS	DJB
7	4/16/2025	BIDDEFORD PERMIT APP.	DJB
6	9/17/2024	REVISED PERMIT SET	DJB
5	6/27/2024	REVISED PERMIT SET	DJB
4	9/14/2023	DEP PERMIT SET	DJB
3	6/28/2023	75% DESIGN SUBMISSION	DJB
2	2/15/2023	30% DESIGN SUBMISSION	DJB
1	12/9/2022	15% DESIGN SUB REV	DJB
0	11/11/2022	15% DESIGN SUBMISSION	DJB

SHEET NAME
EXISTING CONDITIONS PLAN

SHEET NO.
C-001

DJCASTELNUOVO, VINNIE \\geiconsultants.com\data\Data_Storage\Working\UNIVERSITY OF NEW ENGLAND\2203703 UNE Marine Science Center Pier\00_CAD\Design\Sheets\2203703-C-001.dwg - 6/9/2025

REMOVE LEDGE
SEE NOTE 2

MHHW = 4.7'
HAT = 6.6'
MLLW
MLW
MHHW = 4.7'
HAT = 6.6'
BFE

25' HAT SETBACK
50' HAT SETBACK
75' HAT SETBACK

GIRARD MARINE
SCIENCE CENTER
(APPROX. 16,865 SF)

FFE=32.96
THRESH= 33.02
THRESH= 33.01
FFE=32.92
THRESH= 33.00
THRESH= 32.97

BUILDING (752 SF)
THRESH =16.98

REMOVE/DEMOLISH
TREE & STUMP,
TYP OF (49)

250' SHORELAND ZONE

CIRA STAMPED "CITY OF BIDDEFORD ZONE LINE"

LEGEND:

— — — LIMIT OF WORK

TREE TO BE REMOVED

NOTES:

1. CONTRACTOR SHALL COORDINATE STAGING OF ALL EQUIPMENT AND MATERIALS OUTSIDE OF THE LIMITS OF WORK AT OFF-SITE LOCATIONS AS APPROVED BY OWNER.
2. FIELD VERIFY EXTENTS OF EXPOSED LEDGE AND REVIEW WITH ENGINEER PRIOR TO REMOVAL.

0 20 40
SCALE, FEET

ELEVATION	MLLW	NAVD88*
BFE	+19.0	+14.0
HAT	+11.6	+6.6
MHHW	+9.7	+4.7
MHW	+9.3	+4.3
MSL	+4.8	-0.2
MLW	+0.3	-4.7
MLLW	0.0	-5.0

*PROJECT DATUM

FOR PERMIT

Attention:
0 1"
If this scale bar does not measure 1" then drawing is not original scale.

STATE OF MAINE
BRIAN M. MCDEVITT
PE18260
LICENSED
PROFESSIONAL ENGINEER
6/9/2025

Designed:	DJB
Drawn:	JAM
Checked:	BJB
Approved:	BMM
P.E. No:	13033
GEI Project	2203703

GEI Consultants
GEI CONSULTANTS, INC.
5 MILK STREET
PORTLAND, ME 04101
(207)797-8901

UNIVERSITY OF NEW ENGLAND
11 HILLS BEACH RD.
BIDDEFORD, MAINE

UNIVERSITY OF NEW ENGLAND MARINE SCIENCE CENTER PIER

11 HILLS BEACH ROAD
BIDDEFORD, YORK COUNTY, MAINE

NO	DATE	ISSUE/REVISION	
8	6/5/2025	ADDRESS PB COMMENTS	DJB
7	4/16/2025	BIDDEFORD PERMIT APP.	DJB
6	9/17/2024	REVISED PERMIT SET	DJB
5	6/27/2024	REVISED PERMIT SET	DJB
4	9/14/2023	DEP PERMIT SET	DJB
3	6/28/2023	75% DESIGN SUBMISSION	DJB
2	2/15/2023	30% DESIGN SUBMISSION	DJB
1	12/9/2022	15% DESIGN SUB REV	DJB
0	11/11/2022	15% DESIGN SUBMISSION	DJB

SHEET NAME
DEMOLITION AND CONSTRUCTION STAGING

SHEET NO.
C-002

DJCASTELNUOVO, VINNIE \\geiconsultants.com\data\Data_Storage\Working\UNIVERSITY OF NEW ENGLAND\2203703 UNE Marine Science Center Pier\00_CAD\Design\Sheets\2203703-C-002.dwg - 6/9/2025

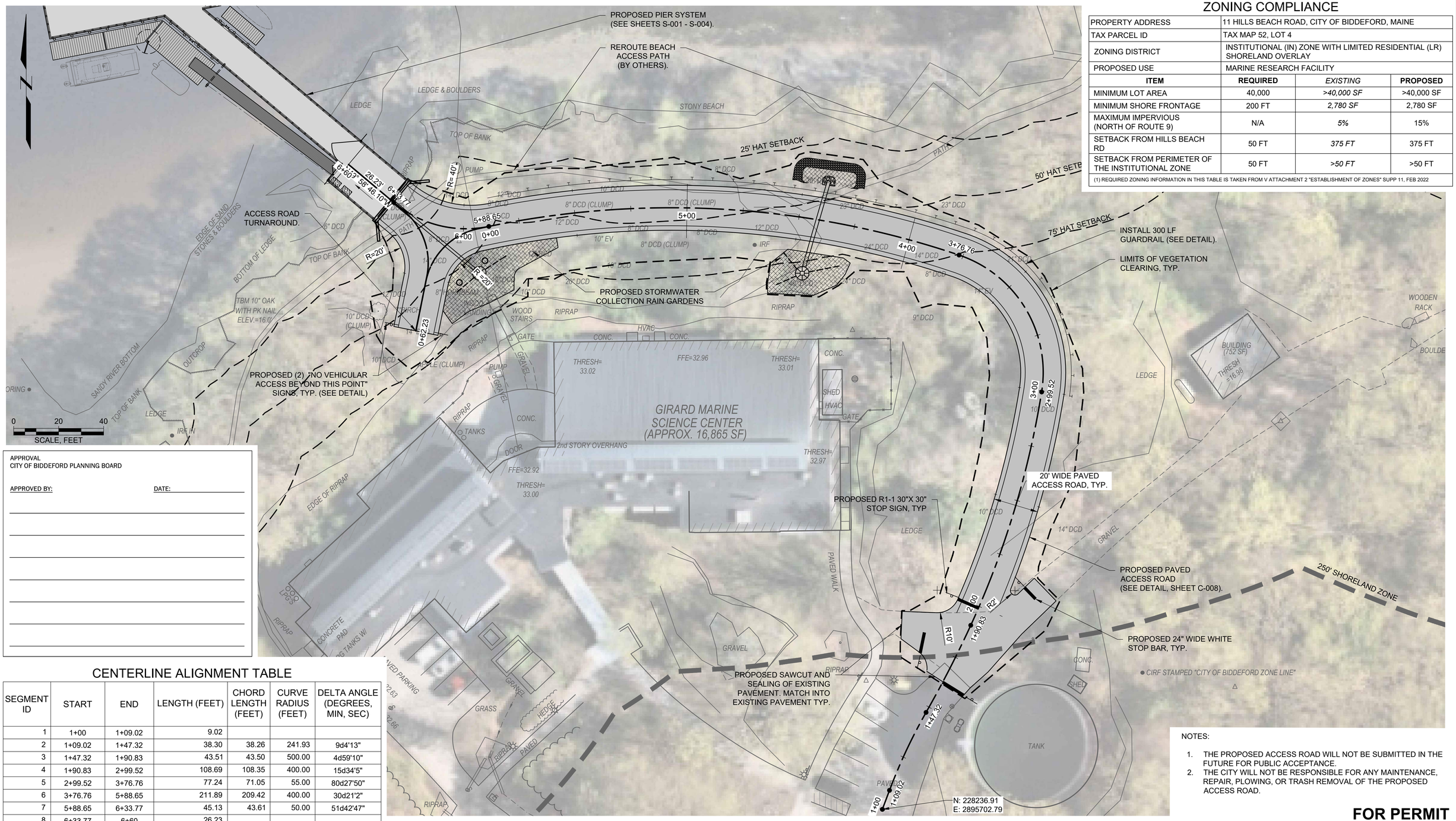

ZONING COMPLIANCE

PROPERTY ADDRESS	11 HILLS BEACH ROAD, CITY OF BIDDEFORD, MAINE		
TAX PARCEL ID	TAX MAP 52, LOT 4		
ZONING DISTRICT	INSTITUTIONAL (IN) ZONE WITH LIMITED RESIDENTIAL (LR) SHORELAND OVERLAY		
PROPOSED USE	MARINE RESEARCH FACILITY		
ITEM	**REQUIRED**	*EXISTING*	**PROPOSED**
MINIMUM LOT AREA	40,000	*>40,000 SF*	>40,000 SF
MINIMUM SHORE FRONTAGE	200 FT	*2,780 SF*	2,780 SF
MAXIMUM IMPERVIOUS (NORTH OF ROUTE 9)	N/A	*5%*	15%
SETBACK FROM HILLS BEACH RD	50 FT	*375 FT*	375 FT
SETBACK FROM PERIMETER OF THE INSTITUTIONAL ZONE	50 FT	*>50 FT*	>50 FT

(1) REQUIRED ZONING INFORMATION IN THIS TABLE IS TAKEN FROM V ATTACHMENT 2 "ESTABLISHMENT OF ZONES" SUPP 11, FEB 2022

APPROVAL
CITY OF BIDDEFORD PLANNING BOARD

APPROVED BY: DATE:

CENTERLINE ALIGNMENT TABLE

SEGMENT ID	START	END	LENGTH (FEET)	CHORD LENGTH (FEET)	CURVE RADIUS (FEET)	DELTA ANGLE (DEGREES, MIN, SEC)
1	1+00	1+09.02	9.02			
2	1+09.02	1+47.32	38.30	38.26	241.93	9d4'13"
3	1+47.32	1+90.83	43.51	43.50	500.00	4d59'10"
4	1+90.83	2+99.52	108.69	108.35	400.00	15d34'5"
5	2+99.52	3+76.76	77.24	71.05	55.00	80d27'50"
6	3+76.76	5+88.65	211.89	209.42	400.00	30d21'2"
7	5+88.65	6+33.77	45.13	43.61	50.00	51d42'47"
8	6+33.77	6+60	26.23			

ELEVATION	MLLW	NAVD88*
BFE	+19.0	+14.0
HAT	+11.6	+6.6
MHHW	+9.7	+4.7
MHW	+9.3	+4.3
MSL	+4.8	-0.2
MLW	+0.3	-4.7
MLLW	0.0	-5.0

*PROJECT DATUM

NOTES:

1. THE PROPOSED ACCESS ROAD WILL NOT BE SUBMITTED IN THE FUTURE FOR PUBLIC ACCEPTANCE.
2. THE CITY WILL NOT BE RESPONSIBLE FOR ANY MAINTENANCE, REPAIR, PLOWING, OR TRASH REMOVAL OF THE PROPOSED ACCESS ROAD.

FOR PERMIT

Attention:
0 1"
If this scale bar does not measure 1" then drawing is not original scale.

STATE OF MAINE
BRIAN M. MCDEVITT
PE18260
LICENSED
PROFESSIONAL ENGINEER
6/9/2025

Designed:	DJB
Drawn:	JAM
Checked:	BJB
Approved:	BMM
P.E. No:	13033
GEI Project	2203703

GEI Consultants
GEI CONSULTANTS, INC.
5 MILK STREET
PORTLAND, ME 04101
(207)797-8901

UNE
UNIVERSITY OF NEW ENGLAND
11 HILLS BEACH RD.
BIDDEFORD, MAINE

UNIVERSITY OF NEW ENGLAND MARINE SCIENCE CENTER PIER

11 HILLS BEACH ROAD
BIDDEFORD, YORK COUNTY, MAINE

NO	DATE	ISSUE/REVISION	APP
8	6/5/2025	ADDRESS PB COMMENTS	DJB
7	4/16/2025	BIDDEFORD PERMIT APP.	DJB
6	9/17/2024	REVISED PERMIT SET	DJB
5	6/27/2024	REVISED PERMIT SET	DJB
4	9/14/2023	DEP PERMIT SET	DJB
3	6/28/2023	75% DESIGN SUBMISSION	DJB
2	2/15/2023	30% DESIGN SUBMISSION	DJB
1	12/9/2022	15% DESIGN SUB REV	DJB
0	11/11/2022	15% DESIGN SUBMISSION	DJB

SHEET NAME: **SITE PLAN**

SHEET NO.: **C-003**

DICASTELNUOVO, VINNIE B:\Working\UNIVERSITY OF NEW ENGLAND\2203703 UNE Marine Science Center Pier\00_CAD\Design\Sheets\2203703-C-003.dwg - 6/10/2025

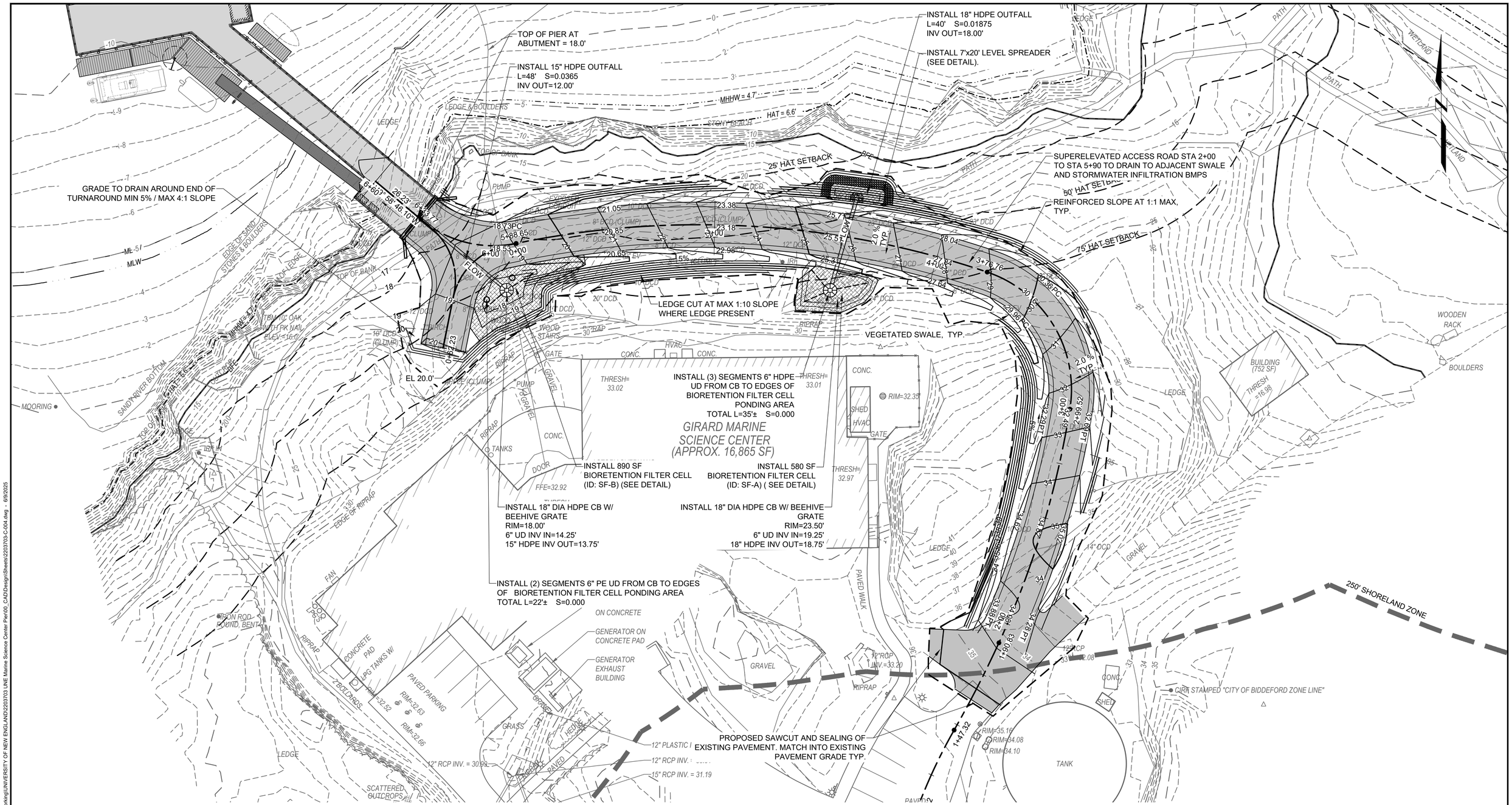

PLAN
SCALE: 1" = 20'

FOR PERMIT

Attention:
0 1"
If this scale bar does not measure 1" then drawing is not original scale.

0 20 40
SCALE, FEET

STATE OF MAINE
BRIAN M. MCDEVITT
PE18260
LICENSED
PROFESSIONAL ENGINEER
6/9/2025

Designed:	DJB
Drawn:	JAM
Checked:	BJB
Approved:	BMM
P.E. No:	13033
GEI Project	2203703

GEI Consultants
GEI CONSULTANTS, INC.
5 MILK STREET
PORTLAND, ME 04101
(207)797-8901

UNIVERSITY OF NEW ENGLAND
11 HILLS BEACH RD.
BIDDEFORD, MAINE

UNIVERSITY OF NEW ENGLAND MARINE SCIENCE CENTER PIER

11 HILLS BEACH ROAD
BIDDEFORD, YORK COUNTY, MAINE

NO	DATE	ISSUE/REVISION	APP
8	6/5/2025	ADDRESS PB COMMENTS	DJB
7	4/16/2025	BIDDEFORD PERMIT APP.	DJB
6	9/17/2024	REVISED PERMIT SET	DJB
5	6/27/2024	REVISED PERMIT SET	DJB
4	9/14/2023	DEP PERMIT SET	DJB
3	6/28/2023	75% DESIGN SUBMISSION	DJB
2	2/15/2023	30% DESIGN SUBMISSION	DJB
1	12/9/2022	15% DESIGN SUB REV	DJB
0	11/11/2022	15% DESIGN SUBMISSION	DJB

SHEET NAME
GRADING AND DRAINAGE PLAN

SHEET NO.
C-004

DICASTELNUOVO, VINNIE \\geiconsultants.com\data\Data_Storage\Working\UNIVERSITY OF NEW ENGLAND\2203703 UNE Marine Science Center Pier\00_CAD\Design\Sheets\2203703-C-004.dwg - 6/9/2025

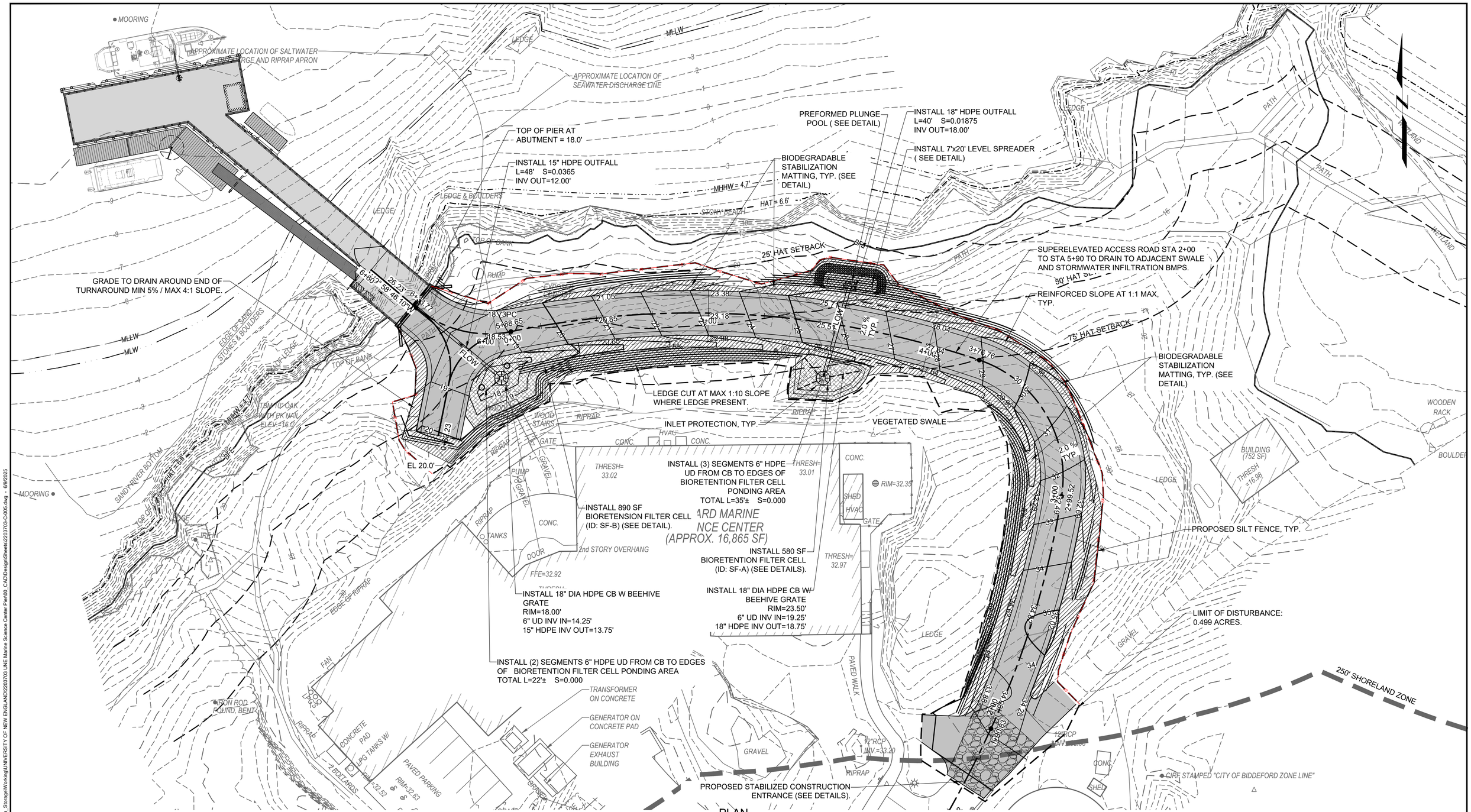

PLAN
SCALE: 1" = 20'

FOR PERMIT

0 NOTE:
1. CONTRACTOR SHALL INSTALL BIODEGRADABLE STABILIZATION MATTING WHEREVER PROPOSED SLOPES EXCEED 5H:1V.

Attention:
0 1"
If this scale bar does not measure 1" then drawing is not original scale.

STATE OF MAINE
BRIAN M. MCDEVITT
PE18260
LICENSED
PROFESSIONAL ENGINEER
6/9/2025

Designed:	DJB
Drawn:	JAM
Checked:	BJB
Approved:	BMM
P.E. No:	13033
GEI Project	2203703

GEI Consultants
GEI CONSULTANTS, INC.
5 MILK STREET
PORTLAND, ME 04101
(207)797-8901

UNIVERSITY OF NEW ENGLAND
11 HILLS BEACH RD.
BIDDEFORD, MAINE

UNIVERSITY OF NEW ENGLAND MARINE SCIENCE CENTER PIER
11 HILLS BEACH ROAD
BIDDEFORD, YORK COUNTY, MAINE

NO	DATE	ISSUE/REVISION	APP
8	6/5/2025	ADDRESS PB COMMENTS	DJB
7	4/16/2025	BIDDEFORD PERMIT APP.	DJB
6	9/17/2024	REVISED PERMIT SET	DJB
5	6/27/2024	REVISED PERMIT SET	DJB
4	9/14/2023	DEP PERMIT SET	DJB
3	6/28/2023	75% DESIGN SUBMISSION	DJB
2	2/15/2023	30% DESIGN SUBMISSION	DJB
1	12/9/2022	15% DESIGN SUB REV	DJB
0	11/11/2022	15% DESIGN SUBMISSION	DJB

SHEET NAME
EROSION CONTROL PLAN

SHEET NO.
C-005

DICASTELNUOVO, VINNIE \\geiconsultants.com\data\Data_Storage\Working\UNIVERSITY OF NEW ENGLAND\2203703 UNE Marine Science Center Pier\00_CAD\Design\Sheets\2203703-C-005.dwg - 6/9/2025

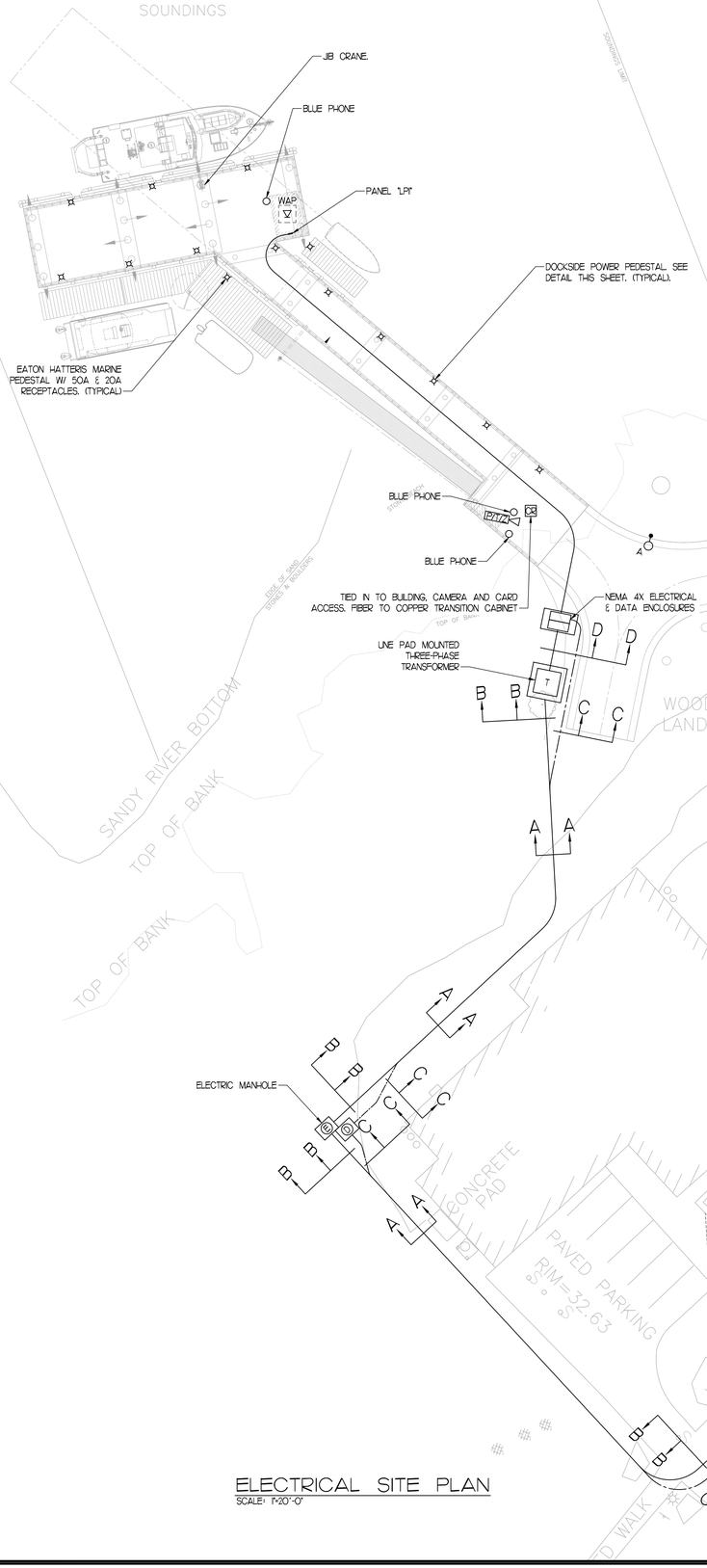

ELECTRICAL SITE PLAN
SCALE: 1"-20'-0"

Hatteras Light Power Pedestal - Specifications

Product Features (cont.)

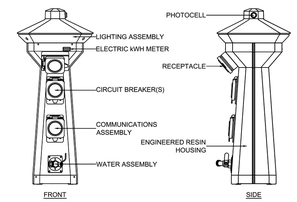

Dimensions

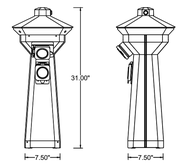

www.marinapower.com 1-800-723-8009 **Hatteras Light** - Product Specifications

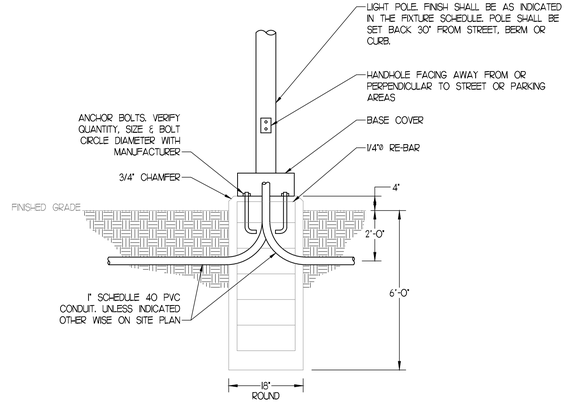

POLE BASE DETAIL
NOT TO SCALE

VINCENT A. DiORIO, INC.
CONSULTING ENGINEERS
89 Access Rd. Suite 18
Norwood, MA 02062
(781)255-9754 | vadjr@vadeng.com
www.vadeng.com

REVISIONS:

REV.:	DATE:	DESCRIPTION:

CLIENT:
UNIVERSITY OF NEW ENGLAND

PROJECT:
MARINE SCIENCE CENTER PIER
11 HILLS BEACH ROAD
BIDDEFORD, MAINE

DRAWING TITLE
ELECTRICAL SITE PLAN

DRAWN:	CWQ
CHECKED:	VAD Jr
SCALE:	AS INDICATED
DATE:	APRIL 15, 2025

ES1.1

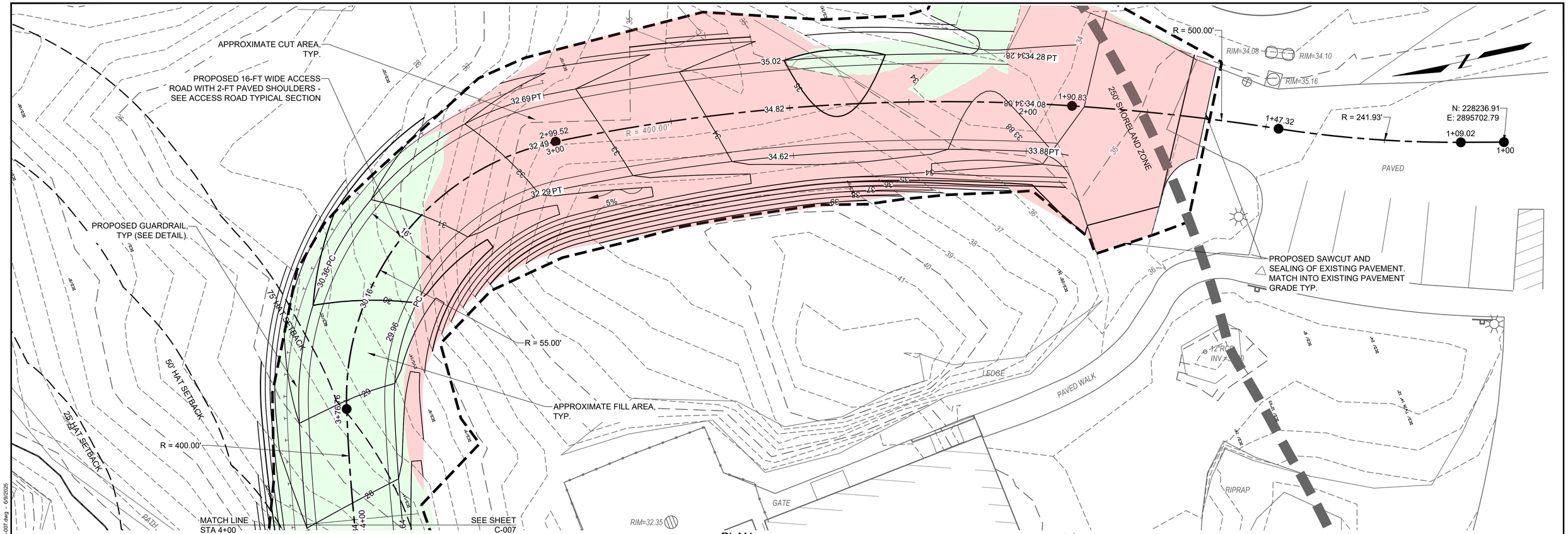

PLAN

SCALE: 1" = 10'

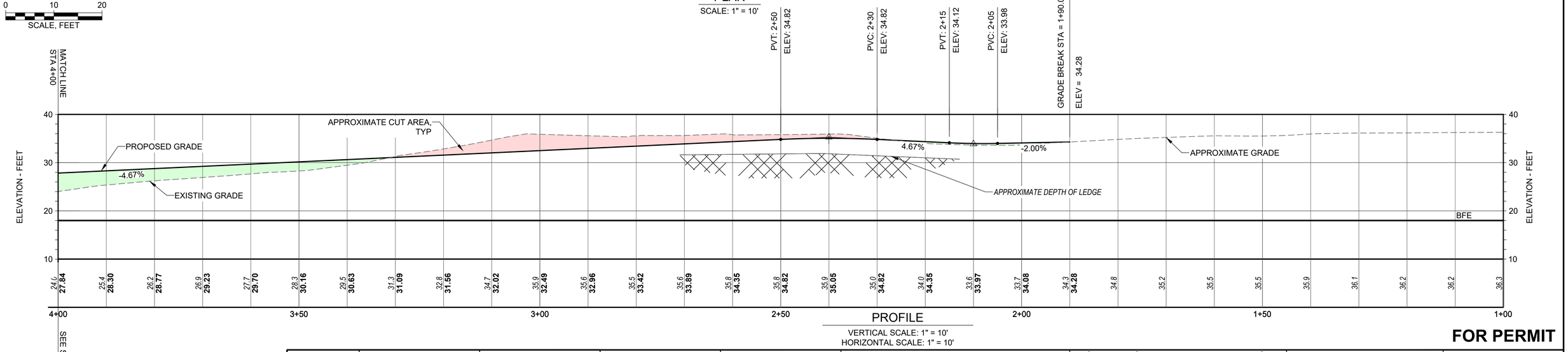

PROFILE

VERTICAL SCALE: 1" = 10'
HORIZONTAL SCALE: 1" = 10'

FOR PERMIT

CUT/FILL ANALYSIS

STRUCTURE	QUANTITY (CY)
CUT	2174.50
FILL	782.30
NET (FILL)	1392.20

Attention:
0 1"
If this scale bar does not measure 1" then drawing is not original scale.

STATE OF MAINE
BRIAN M. MCDEVITT
PE18260
LICENSED PROFESSIONAL ENGINEER
6/9/2025

Designed:	DJB
Drawn:	JAM
Checked:	BJB
Approved:	BMM
P.E. No:	13033
GEI Project	2203703

GEI Consultants
GEI CONSULTANTS, INC.
5 MILK STREET
PORTLAND, ME 04101
(207)797-8901

UNE
UNIVERSITY OF NEW ENGLAND
11 HILLS BEACH RD.
BIDDEFORD, MAINE

UNIVERSITY OF NEW ENGLAND MARINE SCIENCE CENTER PIER

11 HILLS BEACH ROAD
BIDDEFORD, YORK COUNTY, MAINE

NO	DATE	ISSUE/REVISION	APP
8	6/5/2025	ADDRESS PB COMMENTS	DJB
7	4/16/2025	BIDDEFORD PERMIT APP.	DJB
6	9/17/2024	REVISED PERMIT SET	DJB
5	6/27/2024	REVISED PERMIT SET	DJB
4	9/14/2023	DEP PERMIT SET	DJB
3	6/28/2023	75% DESIGN SUBMISSION	DJB
2	2/15/2023	30% DESIGN SUBMISSION	DJB
1	12/9/2022	15% DESIGN SUB REV	DJB
0	11/11/2022	15% DESIGN SUBMISSION	DJB

SHEET NAME

ACCESS ROAD PLAN AND PROFILE STA 1+00 TO 4+00

SHEET NO.

C-006

DICASTELNUOVO, VINNIE \\geiconsultants.com\data\Data_Storage\Working\UNIVERSITY OF NEW ENGLAND\2203703 UNE Marine Science Center Pier\00_CAD\Design\Sheets\2203703-C-006 C-007.dwg - 6/9/2025

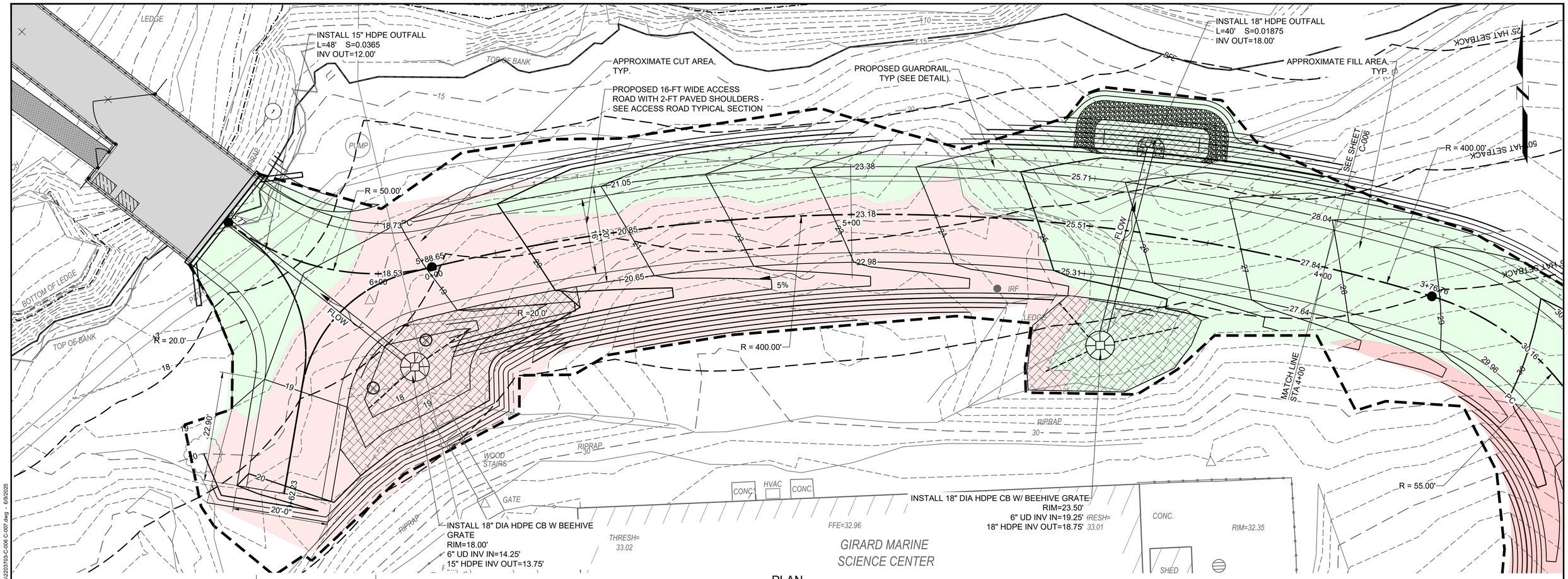

PLAN
SCALE: 1" = 10'

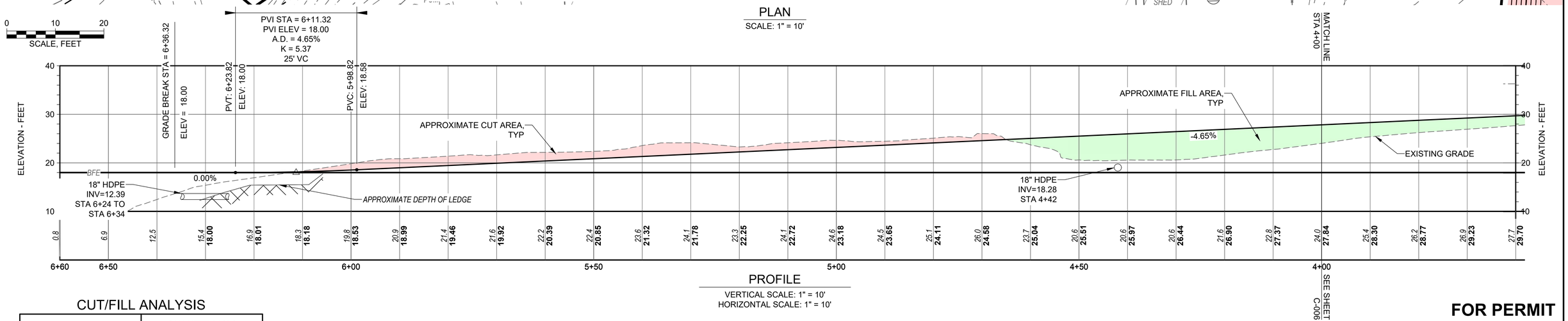

PROFILE
VERTICAL SCALE: 1" = 10'
HORIZONTAL SCALE: 1" = 10'

CUT/FILL ANALYSIS

STRUCTURE	QUANTITY (CY)
CUT	2174.50
FILL	782.30
NET (FILL)	1392.20

FOR PERMIT

Attention:
0 1"
If this scale bar does not measure 1" then drawing is not original scale.

STATE OF MAINE
BRIAN M. MCDEVITT
PE18260
LICENSED
PROFESSIONAL ENGINEER
6/9/2025

Designed:	DJB
Drawn:	JAM
Checked:	BJB
Approved:	BMM
P.E. No:	13033
GEI Project	2203703

GEI Consultants
GEI CONSULTANTS, INC.
5 MILK STREET
PORTLAND, ME 04101
(207)797-8901

UNE
UNIVERSITY OF NEW ENGLAND
11 HILLS BEACH RD.
BIDDEFORD, MAINE

UNIVERSITY OF NEW ENGLAND MARINE SCIENCE CENTER PIER

11 HILLS BEACH ROAD
BIDDEFORD, YORK COUNTY, MAINE

NO	DATE	ISSUE/REVISION	APP
8	6/5/2025	ADDRESS PB COMMENTS	DJB
7	4/16/2025	BIDDEFORD PERMIT APP.	DJB
6	9/17/2024	REVISED PERMIT SET	DJB
5	6/27/2024	REVISED PERMIT SET	DJB
4	9/14/2023	DEP PERMIT SET	DJB
3	6/28/2023	75% DESIGN SUBMISSION	DJB
2	2/15/2023	30% DESIGN SUBMISSION	DJB
1	12/9/2022	15% DESIGN SUB REV	DJB
0	11/11/2022	15% DESIGN SUBMISSION	DJB

SHEET NAME
ACCESS ROAD PLAN AND PROFILE STA 4+00 TO STA 6+60

SHEET NO.
C-007

DJCASTELNUOVO, VINNIE \\geiconsultants.com\data\Data_Storage\Working\UNIVERSITY OF NEW ENGLAND\2203703 UNE Marine Science Center Pier\00_CAD\Design\Sheets\2203703-C-006 C-007.dwg - 6/9/2025

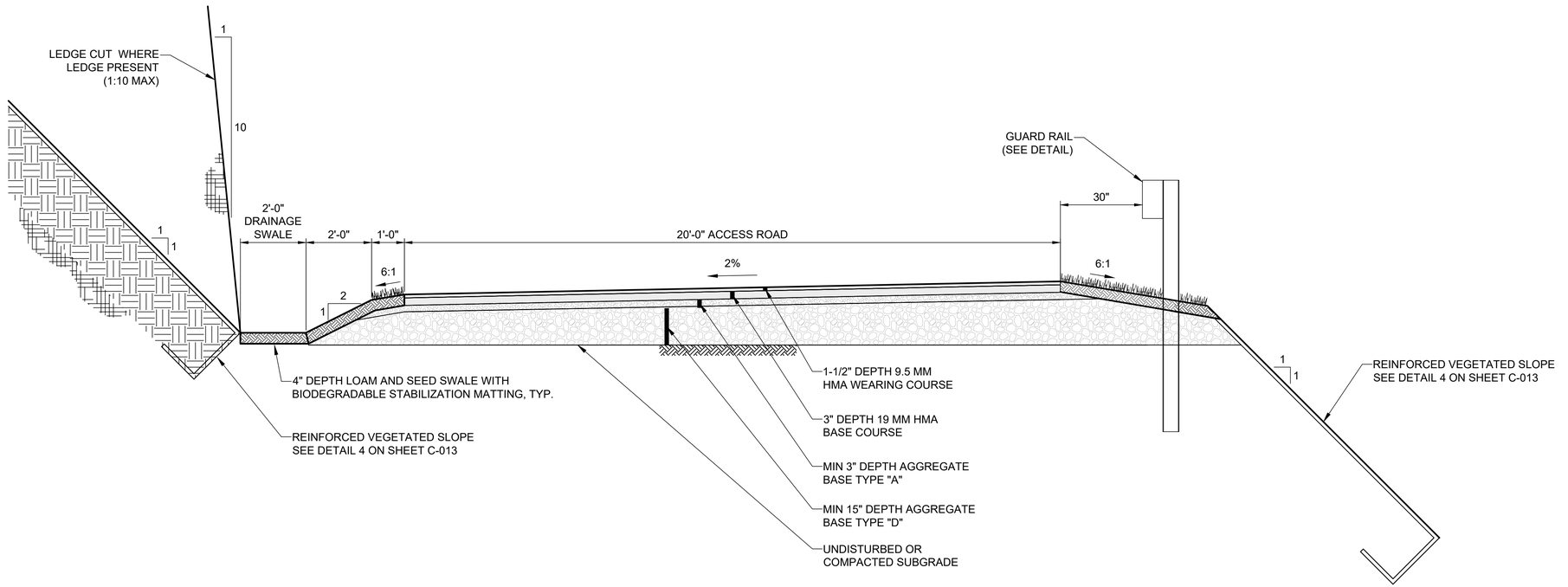

TYPICAL ACCESS ROAD SECTION

SCALE: NTS

FOR PERMIT

Attention:

0 1"

If this scale bar does not measure 1" then drawing is not original scale.

STATE OF MAINE
BRIAN M. MCDEVITT
PE18260
LICENSED
PROFESSIONAL ENGINEER

6/9/2025

Designed:	DJB
Drawn:	JAM
Checked:	BJB
Approved:	BMM
P.E. No:	13033
GEI Project	2203703

GEI Consultants
GEI CONSULTANTS, INC.
5 MILK STREET
PORTLAND, ME 04101
(207)797-8901

UNE
UNIVERSITY OF NEW ENGLAND
11 HILLS BEACH RD.
BIDDEFORD, MAINE

UNIVERSITY OF NEW ENGLAND MARINE SCIENCE CENTER PIER
11 HILLS BEACH ROAD
BIDDEFORD, YORK COUNTY, MAINE

NO	DATE	ISSUE/REVISION	APP
8	6/5/2025	ADDRESS PB COMMENTS	DJB
7	4/16/2025	BIDDEFORD PERMIT APP.	DJB
6	9/17/2024	REVISED PERMIT SET	DJB
5	6/27/2024	REVISED PERMIT SET	DJB
4	9/14/2023	DEP PERMIT SET	DJB
3	6/28/2023	75% DESIGN SUBMISSION	DJB
2	2/15/2023	30% DESIGN SUBMISSION	DJB
1	12/9/2022	15% DESIGN SUB REV	DJB
0	11/11/2022	15% DESIGN SUBMISSION	DJB

SHEET NAME
ACCESS ROAD TYPICAL SECTION

SHEET NO.
C-008

D:\CASTELNUOVO, VINNIE \\geiconsultants.com\data\Data_Storage\Working\UNIVERSITY OF NEW ENGLAND\2203703 UNE Marine Science Center Pier\00_CAD\Design\Sheets\2203703-C-008.dwg - 6/9/2025

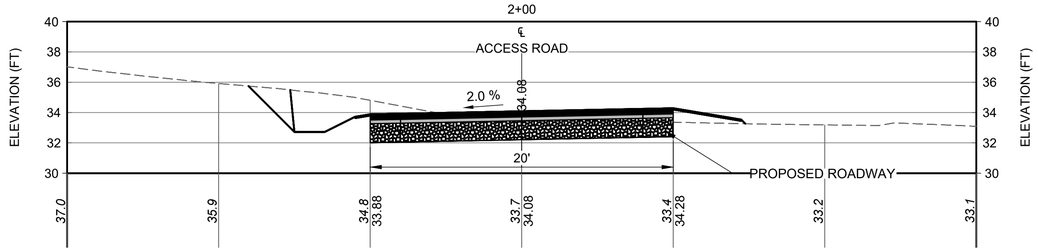

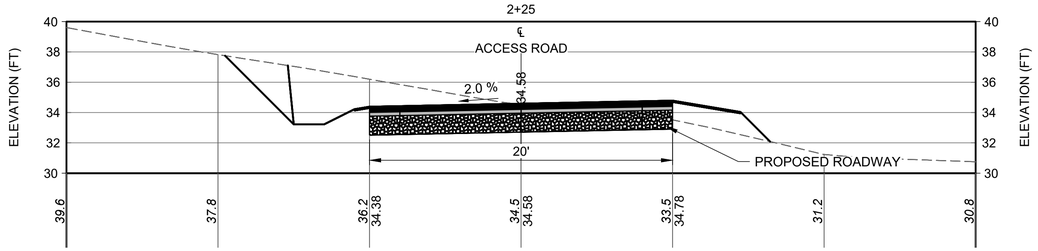

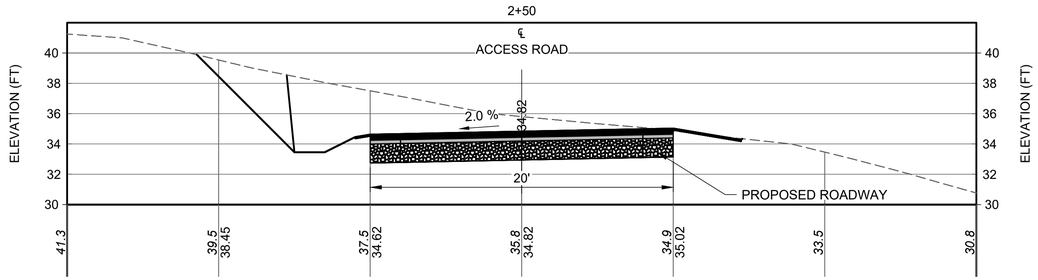

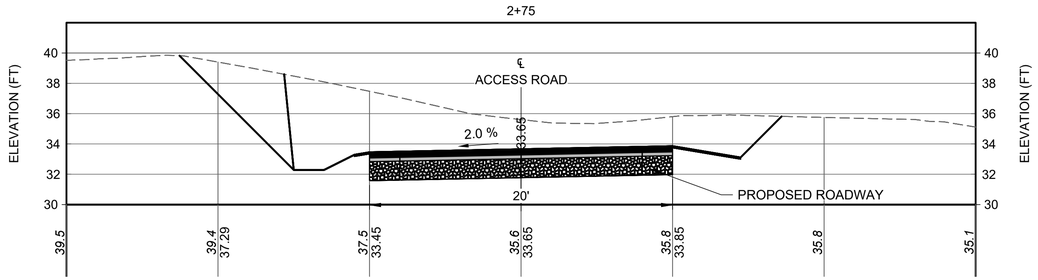

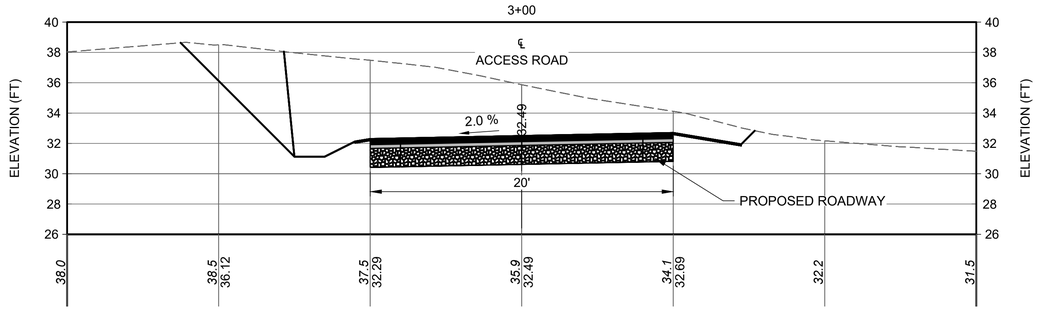

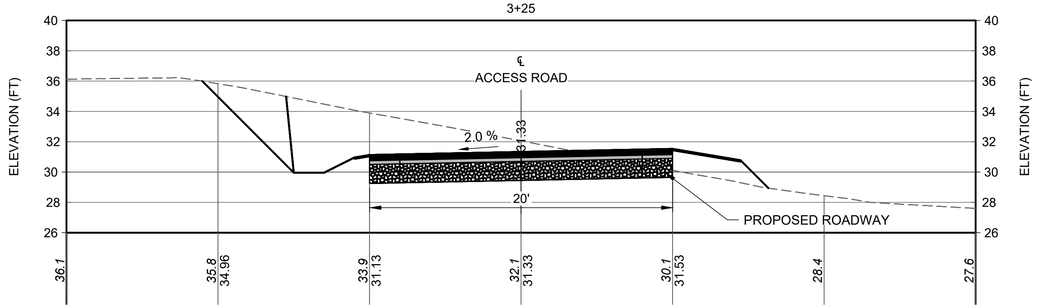

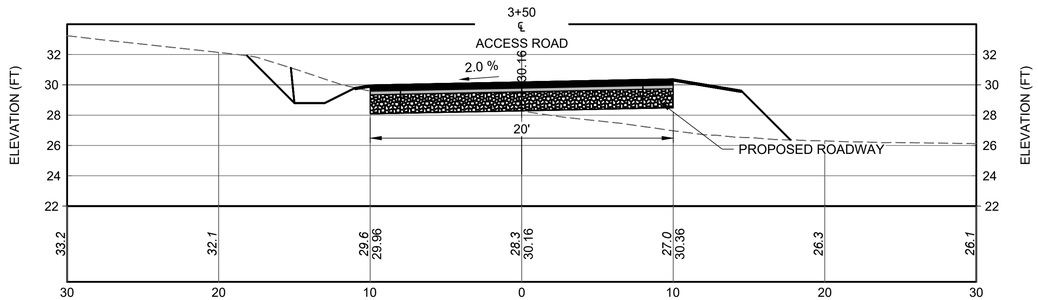

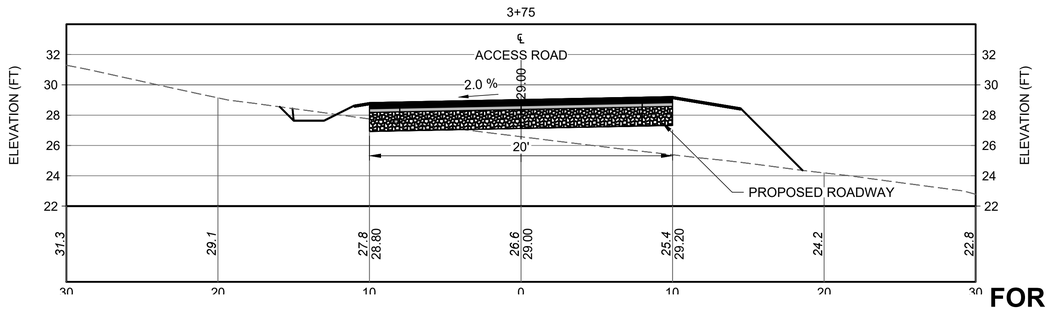

FOR PERMIT

0 2.5 5 10
SCALE, FEET

Attention:
0 1"
If this scale bar does not measure 1" then drawing is not original scale.

STATE OF MAINE
BRIAN M. MCDEVITT
PE18260
LICENSED
PROFESSIONAL ENGINEER
6/9/2025

Designed:	DJB
Drawn:	JAM
Checked:	BJB
Approved:	BMM
P.E. No:	13033
GEI Project	2203703

GEI Consultants
GEI CONSULTANTS, INC.
5 MILK STREET
PORTLAND, ME 04101
(207)797-8901

UNIVERSITY OF NEW ENGLAND
11 HILLS BEACH RD.
BIDDEFORD, MAINE

UNIVERSITY OF NEW ENGLAND MARINE SCIENCE CENTER PIER

11 HILLS BEACH ROAD
BIDDEFORD, YORK COUNTY, MAINE

NO	DATE	ISSUE/REVISION	APP
8	6/5/2025	ADDRESS PB COMMENTS	DJB
7	4/16/2025	BIDDEFORD PERMIT APP.	DJB
6	9/17/2024	REVISED PERMIT SET	DJB
5	6/27/2024	REVISED PERMIT SET	DJB
4	9/14/2023	DEP PERMIT SET	DJB
3	6/28/2023	75% DESIGN SUBMISSION	DJB
2	2/15/2023	30% DESIGN SUBMISSION	DJB
1	12/9/2022	15% DESIGN SUB REV	DJB
0	11/11/2022	15% DESIGN SUBMISSION	DJB

SHEET NAME
ROAD ACCESS SECTIONS STA 2+00 TO 3+75

SHEET NO.
C-009

DICASTELNUOVO, VINNIE \\geiconsultants.com\data\Data_Storage\Working\UNIVERSITY OF NEW ENGLAND\2203703 UNE Marine Science Center Pier\00_CAD\Design\Sheets\2203703-C-009 C-010.dwg - 6/9/2025

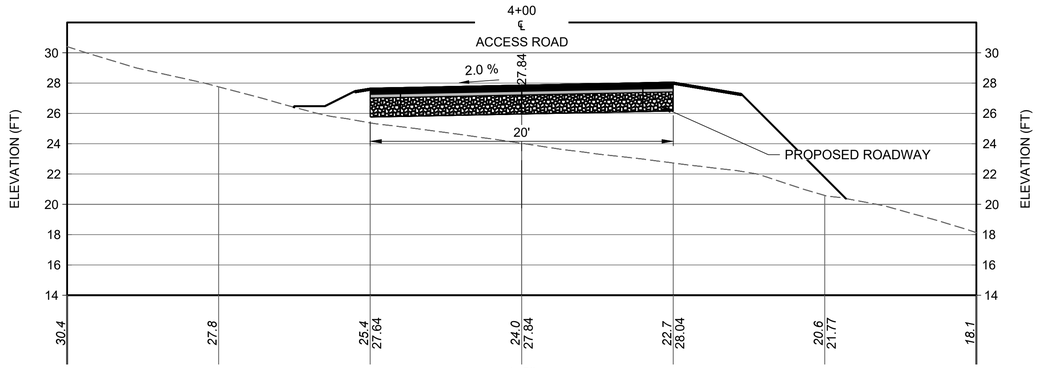

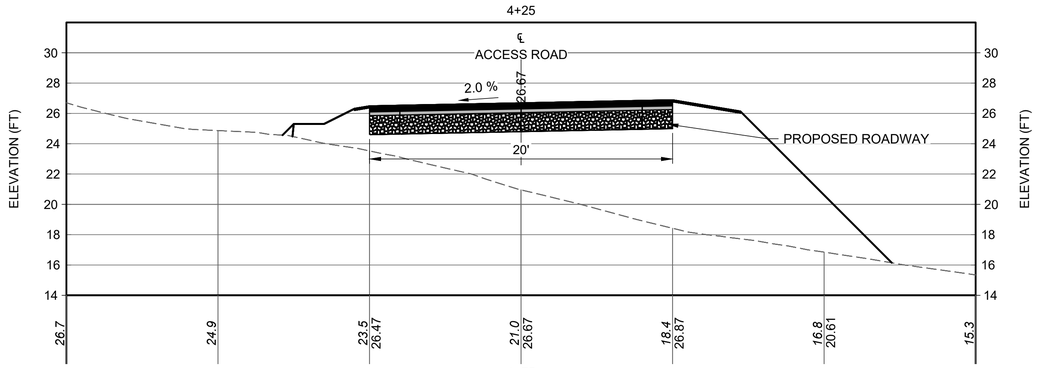

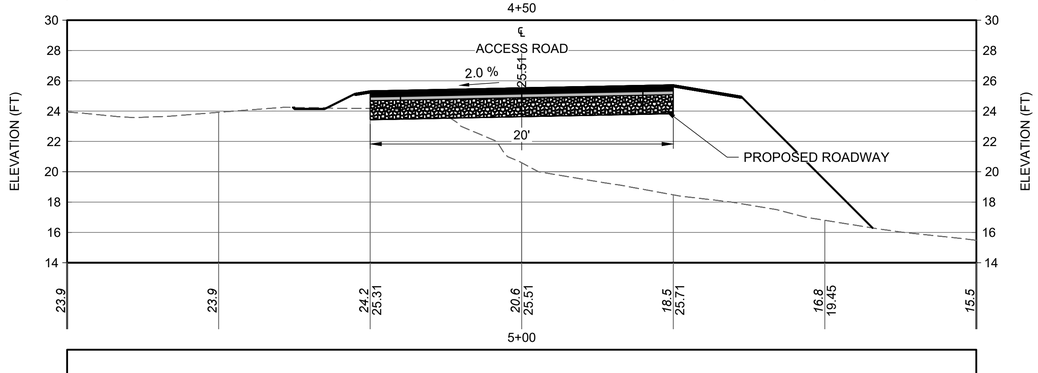

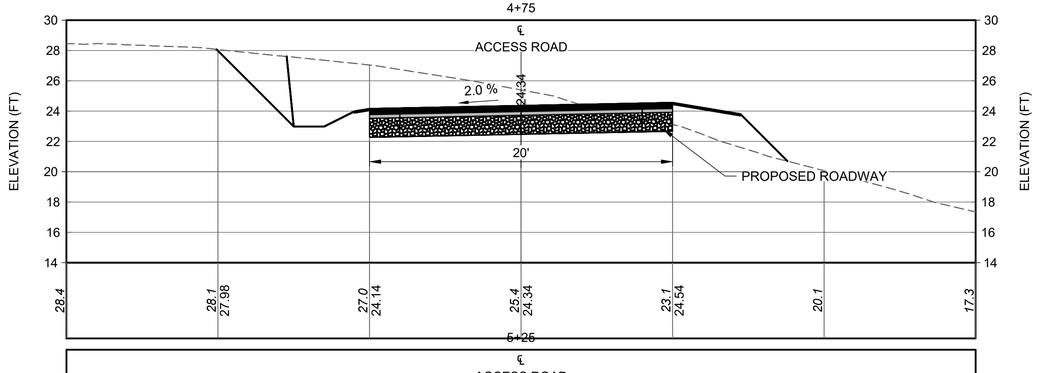

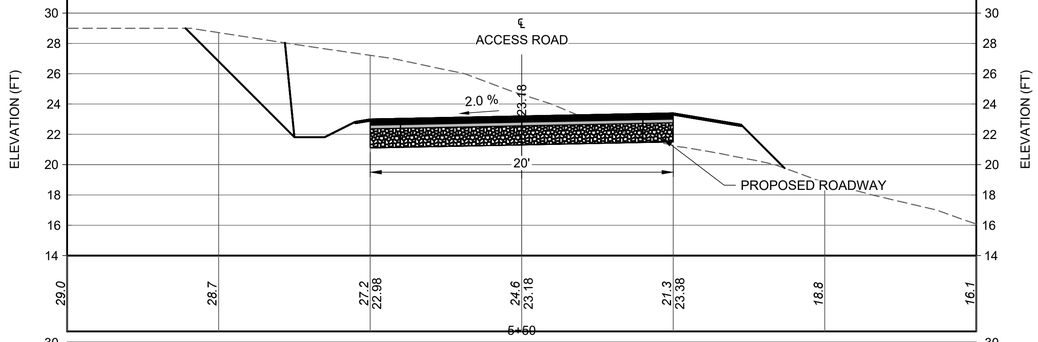

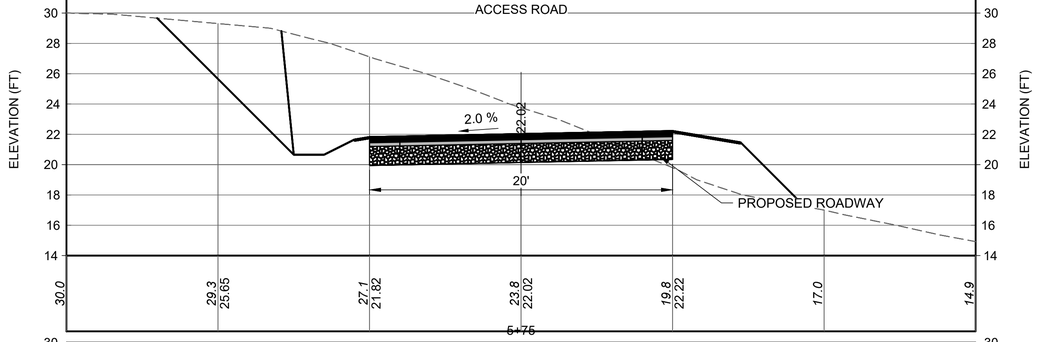

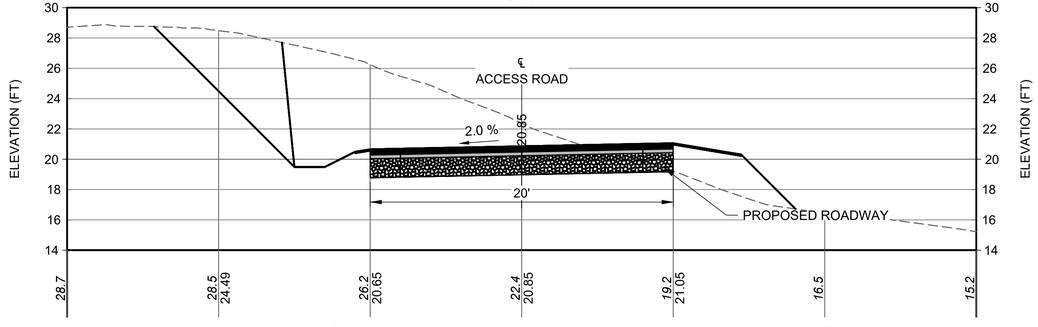

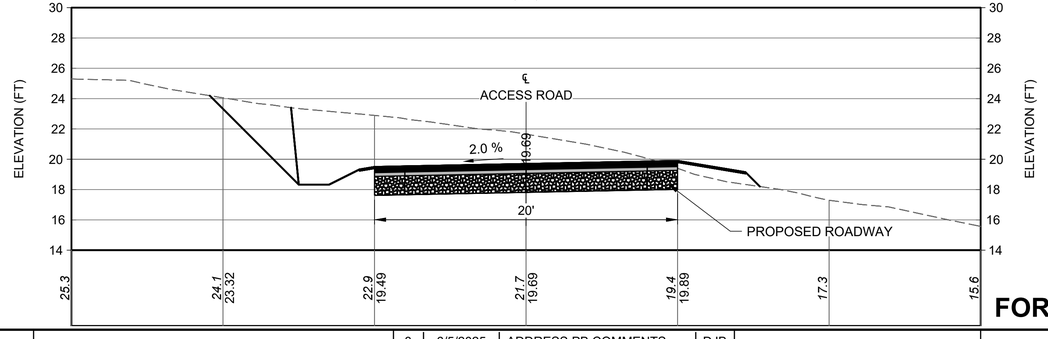

FOR PERMIT

0 2.5 5 10
SCALE, FEET

Attention:
0 1"
If this scale bar does not measure 1" then drawing is not original scale.

STATE OF MAINE
BRIAN M. MCDEVITT
PE18260
LICENSED
PROFESSIONAL ENGINEER
6/9/2025

Designed:	DJB
Drawn:	JAM
Checked:	BJB
Approved:	BMM
P.E. No:	13033
GEI Project	2203703

GEI Consultants
GEI CONSULTANTS, INC.
5 MILK STREET
PORTLAND, ME 04101
(207)797-8901

UNE
UNIVERSITY OF NEW ENGLAND
11 HILLS BEACH RD.
BIDDEFORD, MAINE

UNIVERSITY OF NEW ENGLAND MARINE SCIENCE CENTER PIER

11 HILLS BEACH ROAD
BIDDEFORD, YORK COUNTY, MAINE

NO	DATE	ISSUE/REVISION	APP
8	6/5/2025	ADDRESS PB COMMENTS	DJB
7	4/16/2025	BIDDEFORD PERMIT APP.	DJB
6	9/17/2024	REVISED PERMIT SET	DJB
5	6/27/2024	REVISED PERMIT SET	DJB
4	9/14/2023	DEP PERMIT SET	DJB
3	6/28/2023	75% DESIGN SUBMISSION	DJB
2	2/15/2023	30% DESIGN SUBMISSION	DJB
1	12/9/2022	15% DESIGN SUB REV	DJB
0	11/11/2022	15% DESIGN SUBMISSION	DJB

SHEET NAME

ROAD ACCESS SECTIONS STA 4+00 TO 5+75

SHEET NO.

C-010

DICASTELNUOVO, VINNIE \\geiconsultants.com\data\Data_Storage\Working\UNIVERSITY OF NEW ENGLAND\2203703 UNE Marine Science Center Pier\00_CAD\Design\Sheets\2203703-C-009 C-010.dwg - 6/9/2025

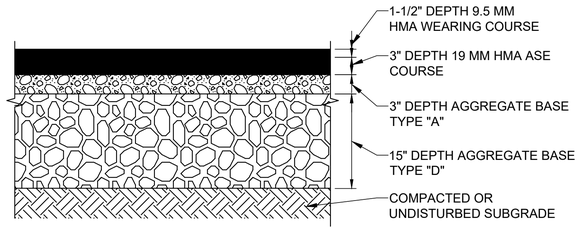

NOTES:
1. PAVEMENT DESIGN SHALL HAVE A MAINEDOT APPROVED JOB MIX FORMULA (JMF) WITHIN THE LATEST CALENDAR YEAR UNLESS OTHERWISE APPROVED BY OWNER.

1 HMA TRAVELWAY/SHOULDER TYPICAL SECTION

NO SCALE

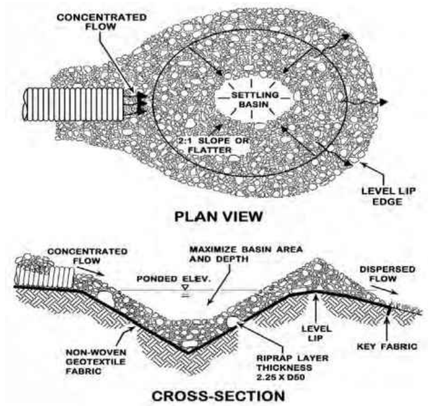

PLUNGE POOL SIZING (minimum)				
SIZE	RIPRAP SIZING (D_{50})	WIDTH At the narrow end of pipe	LENGTH For slow flows (no pressure head)	LENGTH For high flows (with pressure head)
12"	5"	3-4'	4-6'	8-10'
18"	8"	4-6'	6-8'	12-18'
24"	10"	6-8'	8-10'	18-22'
30"	12"	8-10'	12-14'	22-28'
36"	14"	10-12'	14-16'	28-32'

The diameter of the largest stone size in the mix should be about 1.5 times the D_{50} and the smallest one about one half the size. The thickness of riprap should never be less than 2 times the rock D_{50}.

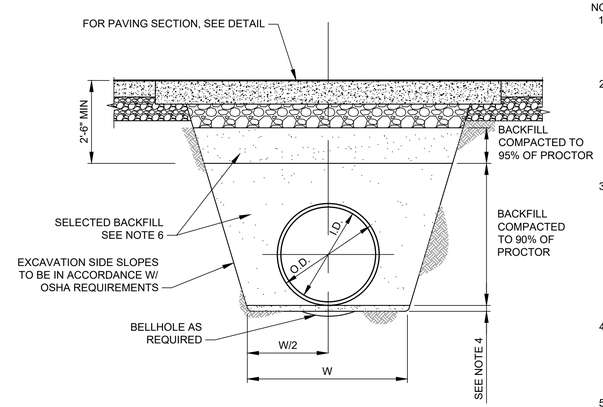

NOTES:
1. TRENCH BOTTOM OR BEDDING FOR ALL PIPE SHALL BE GRADED TO PROVIDE UNIFORM SUPPORT FOR THE ENTIRE LENGTH OF THE PIPE EXCEPT AT BELLHOLES.
2. BELLHOLES FOR PIPES SHALL HAVE A CLEARANCE OF 3" BETWEEN THE BOTTOM OF THE BELLHOLE AND THE EXTERIOR OF THE PIPE BARREL, BUT IN NO CASE SHALL BELLHOLES BE SMALLER THAN REQUIRED TO FACILITATE PLACING OF THE PIPE OR PROPER JOINING OF THE PIPE.
3. COMPACTION BACKFILL SHALL BE COMPACTED TO A DEGREE AT LEAST EQUIVALENT TO THE EXISTING DEGREE OF COMPACTING OF ADJACENT IN-PLACE EARTH MATERIALS AGAINST WHICH SUCH COMPACTED BACKFILL IS TO BE PLACED, OR TO A MIN OF 95% OF THE LABORATORY STANDARD MAX ASTM D698 DENSITY, WHICHEVER IS GREATER.
4. MIN 3" DEEP LAYER OF SCARIFIED MATERIAL WHEN IN HARD MATERIAL. IN UNSUITABLE MATERIAL, OVER EXCAVATE AS DIRECTED BY ENGINEER (6" MIN) AND REPLACE WITH COMPACTED BACKFILL.
5. W = PIPE O.D. + 24" MIN
6. ALL SELECTED BACKFILL IS TO BE IN CONFORMANCE WITH STATE STANDARD SPECIFICATION.

3 TRENCH

NO SCALE

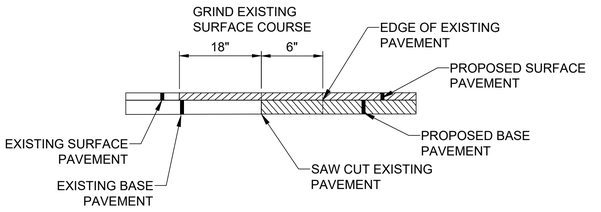

4 HMA PAVEMENT BUTT JOINT

NO SCALE

NOTES:
1. IF THE PIPE DISCHARGES ONTO A FLAT AREA, THE APRON SHOULD HAVE A WIDTH THAT IS THREE TIMES THE OUTLET PIPE'S DIAMETER. IF THE PIPE FLOWS HAVE THE POTENTIAL OF CAUSING A GULLY, A LEVEL SPREADER SHOULD BE PROVIDED.
2. THE CHANNEL SIDE SLOPES SHOULD BE NO STEEPER THAN 2:1. RIPRAP ON THE SIDES OF THE PLUNGE POOL SHOULD EXTEND TO THE TOP OF THE CHANNEL.
3. THE PLUNGE POOL SIZING AND THE MEDIAN SIZED RIPRAP CAN BE DETERMINED FROM THE FOLLOWING TABLE. THE THICKNESS OF RIPRAP SHOULD NOT BE LESS THAN 2 TIMES THE ROCK D50.
4. A GEOTEXTILE OR APPROPRIATE GRAVEL FILTER SHOULD BE USED TO PROTECT AGAINST PIPING OF SOIL FINES FROM BENEATH THE ROCK.
5. IN A CHANNEL THAT CAN BE REVEGETATED, SEED AND MULCH SHOULD BE APPLIED WITHIN 7 DAYS FROM FINAL CONSTRUCTION..

2 PLUNGE POOL

NO SCALE

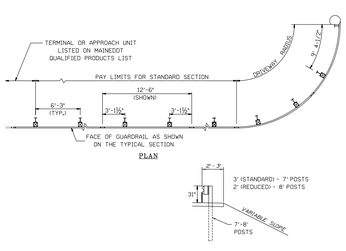

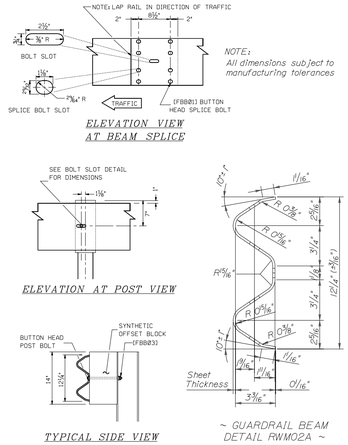

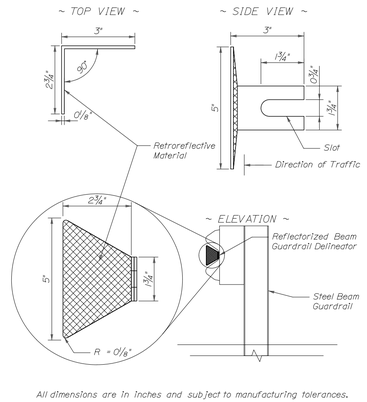

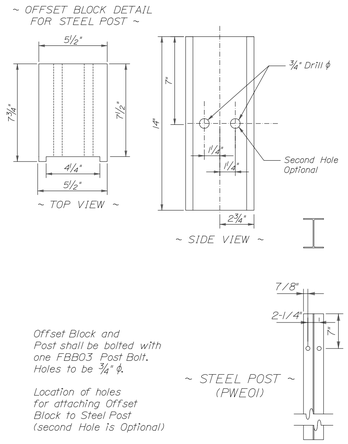

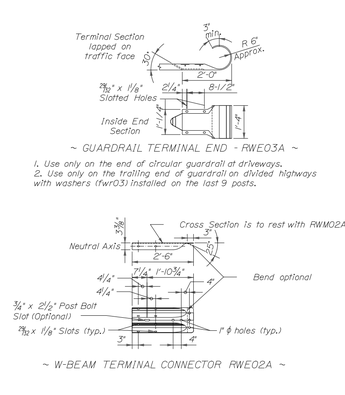

5 GUARD RAIL DETAILS

NO SCALE

FOR PERMIT

Attention: 0 1" — If this scale bar does not measure 1" then drawing is not original scale.

STATE OF MAINE — BRIAN M. MCDEVITT — PE18260 — LICENSED PROFESSIONAL ENGINEER

6/9/2025

Designed:	DJB
Drawn:	JAM
Checked:	BJB
Approved:	BMM
P.E. No:	13033
GEI Project	2203703

GEI Consultants
GEI CONSULTANTS, INC.
5 MILK STREET
PORTLAND, ME 04101
(207)797-8901

UNIVERSITY OF NEW ENGLAND
11 HILLS BEACH RD.
BIDDEFORD, MAINE

UNIVERSITY OF NEW ENGLAND MARINE SCIENCE CENTER PIER
11 HILLS BEACH ROAD
BIDDEFORD, YORK COUNTY, MAINE

NO	DATE	ISSUE/REVISION	APP
8	6/5/2025	ADDRESS PB COMMENTS	DJB
7	4/16/2025	BIDDEFORD PERMIT APP.	DJB
6	9/17/2024	REVISED PERMIT SET	DJB
5	6/27/2024	REVISED PERMIT SET	DJB
4	9/14/2023	DEP PERMIT SET	DJB
3	6/28/2023	75% DESIGN SUBMISSION	DJB
2	2/15/2023	30% DESIGN SUBMISSION	DJB
1	12/9/2022	15% DESIGN SUB REV	DJB
0	11/11/2022	15% DESIGN SUBMISSION	DJB

SHEET NAME: **SITE DETAILS**

SHEET NO.: **C-011**

DICASTELNUOVO, VINNIE \\geiconsultants.com\data\Data_Storage\Working\UNIVERSITY OF NEW ENGLAND\2203703 UNE Marine Science Center Pier\00_CAD\Design\Sheets\2203703-C-DETAILS.dwg - 6/9/2025

EROSION AND SEDIMENTATION CONTROL NOTES:

INTRODUCTION

THE FOLLOWING PLAN FOR CONTROLLING SEDIMENTATION AND EROSION IN THIS PROJECT IS BASED ON CONSERVATION PRACTICES FOUND IN THE MAINE EROSION & SEDIMENT CONTROL BMPS MANUAL, OCTOBER 2016, AND MAINE EROSION AND SEDIMENT CONTROL PRACTICE FIELD GUIDE FOR CONTRACTORS, REVISED 2014, MAINE DEPARTMENT OF ENVIRONMENTAL PROTECTION. THE CONTRACTOR WHO IMPLEMENTS THIS PLAN SHALL BE FAMILIAR WITH THESE PUBLICATIONS AND ADHERE TO THEM AND THE PRACTICES PRESENTED HEREIN REFERENCE IS MADE TO THE EROSION CONTROL PLANS AND DETAILS (C-005 AND C-013) WITHIN THE PLAN SET, SHOWING THE LOCATIONS AND TYPES OF PROPOSED MEASURES TO BE IMPLEMENTED.

GENERAL EROSION AND SEDIMENTATION CONTROL NOTES:

1. EROSION AND SEDIMENTATION CONTROL MEASURES ARE PROPOSED TO CONTROL ACCELERATED EROSION AND SEDIMENTATION AND REDUCE ADVERSE IMPACTS FROM RUNOFF AND EROSION AT THE WORK SITE.
2. APPLICATION OF TEMPORARY AND PERMANENT EROSION CONTROL MEASURES SHALL BE IN ACCORDANCE WITH THE LATEST EDITION OF THE MAINE EROSION AND SEDIMENT CONTROL BMP'S PUBLISHED BY MAINE DEP AND AVAILABLE AT: HTTPS://WWW.MAINE.GOV/DEP/LAND/EROSION/ESCBMPS/
3. THE WORK SHALL BE PERFORMED BY A CONTRACTOR THAT IS CERTIFIED BY MAINE DEP IN EROSION AND SEDIMENT CONTROL MEASURES. A CERTIFIED INDIVIDUAL SHALL BE ONSITE DURING ALL CONSTRUCTION ACTIVITY.
4. EROSION AND SEDIMENTATION DUE TO RUNOFF, TIDAL EXPOSURE, AND WAVE ACTION SHALL BE CONTROLLED BY STAGING CONSTRUCTION ACTIVITY TO MINIMIZE AREA AND TIME OF DISTURBANCE, APPLICATION OF SILT FENCE, BARRIERS, AND OTHER EROSION CONTROL MEASURES, AND PRESERVING NATURAL VEGETATION WHENEVER POSSIBLE.
5. THE CONTRACTOR'S SEQUENCE OF OPERATIONS AND SCHEDULE FOR WORK ACTIVITIES SHALL ACT TO MINIMIZE EXPOSURE TO EROSION.
6. THE CONTRACTOR SHALL TAKE CARE TO LIMIT THE AREA OF SOIL DISTURBANCE TO THE MINIMUM NECESSARY TO COMPLETE THE WORK.
7. EROSION CONTROL MEASURES, SEEDING, AND VEGETATION SHALL BE INSPECTED WEEKLY AND AFTER RAINSTORMS, RUNOFF EVENTS, AND STORM EVENTS UNTIL FINAL ACCEPTANCE. REPAIRS SHALL BE MADE WHEN NO LONGER SERVICEABLE DUE TO DAMAGE OR ACCUMULATION OF SEDIMENT.
8. AT THE COMPLETION OF CONSTRUCTION, ALL DISTURBED AREAS SHALL BE RESTORED TO THEIR ORIGINAL CONDITION AND CONTOUR, UNLESS OTHERWISE INDICATED ON THE PLANS.

GENERAL EROSION AND SEDIMENTATION CONTROL PRACTICES

THE FOLLOWING IS A LIST OF GENERAL EROSION CONTROL PRACTICES THAT WILL BE USED TO PREVENT EROSION AND SEDIMENTATION BEFORE, DURING AND AFTER THE CONSTRUCTION OF THIS PROJECT. IN ADDITION, SPECIAL CARE SHALL BE USED AT ALL TIMES TO:

LIMIT DISTURBANCE AND, HENCE, EROSION

1. CORRECT ANY EROSION PROBLEMS IMMEDIATELY.
2. REGULARLY MONITOR THE IMPLEMENTED PRACTICES, ESPECIALLY AFTER EVERY RAINFALL.
3. REVEGETATE DISTURBED AREAS AS SOON AS POSSIBLE AFTER CONSTRUCTION.
4. CONFORM TO ALL REQUIREMENTS/STANDARDS OF THE SITE'S MAINE DEP EROSION & SEDIMENT CONTROL BMP MANUAL.

SILT FENCE AND/OR EROSION CONTROL MIX SEDIMENT BARRIERS

SILT FENCE AND/OR EROSION CONTROL MIX SEDIMENT BARRIERS WILL BE INSTALLED ALONG THE DOWN GRADIENT SIDE OF THE PROPOSED GROUND DISTURBANCE AREAS PRIOR TO ANY CONSTRUCTION ACTIVITIES WHERE SLOPES EXCEED 8% OR THERE IS FLOWING WATER BOTH SILT FENCE AND EROSION CONTROL MATTING BERMS SHALL BE USED.

CATCH BASIN PROTECTION

CATCH BASIN PROTECTION WILL BE INSTALLED AT THE FIRST DOWNGRADIENT CATCH BASIN IN STREET ADJACENT TO ANY CONSTRUCTION ACTIVITIES AND IN ALL ONSITE CATCH BASINS UNTIL SITE HAS BEEN COMPLETELY STABILIZED.

CONSTRUCTION PHASE

THE FOLLOWING GENERAL PRACTICES WILL BE IMPLEMENTED TO PREVENT EROSION DURING CONSTRUCTION ON THIS PROJECT:

1. EROSION AND SEDIMENTATION CONTROL BMPS SHALL BE INTALLED PRIOR TO THE COMMENCEMENT OF EARTHWORK ACTIVITIES.
2. ONLY THOSE AREAS UNDER ACTIVE CONSTRUCTION WILL BE CLEARED AND LEFT IN AN UNTREATED OR UNVEGETATED CONDITION. AN AREA NO LARGER THAN WHAT CAN BE MULCHED IN ONE DAY MAY BE OPEN AT ONCE. ONCE CONSTRUCTION OF AN AREA IS COMPLETE, FINAL GRADING, LOAMING AND SEEDING SHALL OCCUR IMMEDIATELY (REFER TO "POST CONSTRUCTION REVEGETATION" SECTION). IF DURING FINAL GRADING, LOAMING AND SEEDING CAN NOT OCCUR IMMEDIATELY, IT SHALL BE DONE PRIOR TO ANY STORM EVENT AND WITHIN 15 DAYS OF COMPLETING CONSTRUCTION IN THE AREA. IF FINAL GRADING, LOAMING AND SEEDING CANNOT OCCUR WITHIN 7 DAYS, OR IF THE AREA IS NOT UNDER ACTIVE CONSTRUCTION FOR A PERIOD LONGER THAN 7 DAYS, SEE ITEM NO. 4 BELOW.
3. PRIOR TO THE START OF CONSTRUCTION IN A SPECIFIC AREA, SILT FENCING SHALL BE INSTALLED ON DOWNGRADIENT PORTIONS OF THE SITE AS LOCATED ON THE PLANS TO PROTECT AGAINST ANY CONSTRUCTION RELATED EROSION.
4. TOPSOIL WILL BE STOCKPILED WHEN NECESSARY IN AREAS WHICH HAVE MINIMUM POTENTIAL FOR EROSION AND WILL BE KEPT AS FAR AS POSSIBLE FROM EXISTING DRAINAGE AREAS AND WETLANDS. ALL STOCKPILES EXPECTED TO REMAIN LONGER THAN 7 DAYS SHALL BE:
   A. TREATED WITH ANCHORED MULCH (WITHIN 5 DAYS OF THE LAST DEPOSIT OF STOCKPILED SOIL).
   B. SEEDED WITH CONSERVATION MIX AND MULCHED IMMEDIATELY.
   C. STOCKPILES SHALL BE EITHER PLACED UPHILL OF AN EXISTING SEDIMENT BARRIER ON THE SITE OR ENCIRCLED BY A HAY BALE OR SILT FENCE BARRIER THE FIRST DAY THAT STOCKPILING COMMENCES.
5. ALL DISTURBED AREAS EXPECTED TO REMAIN LONGER THAN 7 DAYS SHALL BE:
   A. TREATED WITH STRAW AT A RATE OF 70-90 LBS. PER 1000 SQUARE FEET FROM 4/16 TO 10/1, OR AT A RATE OF 150-200 LBS. PER 1000 SQUARE FEET FROM 10/1 TO 4/15.
   B. SEEDED WITH CONSERVATION MIX OF PERENNIAL RYE GRASS (1.0 LBS/1000 SQ.FT.) AND MULCHED IMMEDIATELY. FROM 10/1 TO 4/15, FOLLOW THE SEEDING RATES AS OUTLINED BELOW IN SUB-SECTION 4.D. OF THE "POST CONSTRUCTION REVEGETATION" SECTION.
   C. MONITORED EVERY TWO WEEKS UNTIL SEEDING CAN OCCUR AND REMULCHED AS NEEDED TO PROTECT SLOPES.
6. ALL GRADING WILL BE HELD TO A MAXIMUM 3:1 SLOPE WHERE PRACTICAL. GREATER SLOPES MAY BE USED WHERE THE BANKS ARE PROTECTED WITH SOFT ARMOUR MATTING, EROSION CONTROL MATTING, OR RIPRAP. ALL SLOPES WILL BE STABILIZED WITH PERMANENT SEEDING IMMEDIATELY AFTER FINAL GRADING IS COMPLETE. (IT IS UNDERSTOOD THAT IMMEDIATELY MEANS WITHIN 5 DAYS OF THE COMPLETION OF WORK. SEE POST-CONSTRUCTION REVEGETATION FOR SEEDING SPECIFICATION).
7. APPLICATION RATE MUST BE 2 BALES (70-90 LBS.) PER 1,000 SQUARE FEET OR 1.5 TO 2 TONS (90-100 BALES) PER ACRE TO COVER 75 TO 90% OF THE GROUND SURFACE. DRIVE OVER WITH TRACKED CONSTRUCTION EQUIPMENT ON GRADES OF 5% AND LESS.
8. CONSTRUCTION TRAFFIC WILL BE DIRECTED OVER THE EXISTING SITE ENTRANCE. THE ROAD SHALL BE SWEPT AND VACUUMED DAILY SHOULD SEDIMENT BE TRACKED ONTO IT.
9. ALL AREAS DRAINING TO A STORMWATER FILTER OR BMP SHALL BE STABILIZED PRIOR TO CONSTRUCTION OF FILTER MEDIA TO PREVENT SEDIMENT FROM CLOGGING MEDIA.

DEWATERING

1. ALL DEWATERING DISCHARGE LOCATIONS SHALL BE LOCATED ON RELATIVELY FLAT GROUND AT LEAST 75' FROM STREAMS AND 25' FROM WETLANDS. THE CONTRACTOR SHALL UTILIZE DIRTBAGS, EROSION CONTROL MIX BERMS, OR SIMILAR METHODS FOR FILTRATION OF DEWATERING AND SHALL CONFORM TO THE MAINE EROSION AND SEDIMENT CONTROL BMPS G-1, G-2, AND G-3.

POST CONSTRUCTION REVEGETATION

THE FOLLOWING GENERAL PRACTICES WILL BE IMPLEMENTED TO PREVENT EROSION AS SOON AS AN AREA IS READY TO UNDERGO FINAL GRADING:

1. A MINIMUM OF 6" OF LOAM WILL BE SPREAD OVER DISTURBED AREAS AND GRADED TO A UNIFORM DEPTH AND NATURAL APPEARANCE.
2. LAWN AREAS: "PARK MIX" GRASS SEED BY ALLEN, STERLING & LOTHROP (FALMOUTH, MAINE), OR APPROVED EQUAL.
3. MULCH SHALL BE HAY OR STRAW MULCHES THAT ARE DRY AND FREE FROM UNDESIRABLE SEEDS AND COURSE MATERIALS.
   A. APPLICATION RATE MUST BE 2 BALES (70-90 LBS.) PER 1,000 SQUARE FEET OR 1.5 TO 2 TONS (90-100 BALES) PER ACRE TO COVER 75 TO 90% OF THE GROUND SURFACE.
   B. DRIVE OVER WITH TRACKED CONSTRUCTION EQUIPMENT ON GRADES OF 5% AND LESS.
   C. BLANKET WITH TACKED PHOTODEGRADABLE/BIODEGRADABLE NETTING ON GRADES GREATER THAN 5%.
4. HYDRO-MULCH SHALL CONSIST OF A MIXTURE OF ASPHALT, WOOD FIBRE OR PAPER FIBRE AND WATER, WHICH IS SPRAYED OVER A SEEDED AREA. HYDRO-MULCH SHALL NOT BE USED BETWEEN 10/1 AND 4/15.
5. CONSTRUCTION SHALL BE PLANNED TO ELIMINATE THE NEED FOR SEEDING BETWEEN OCTOBER 1ST AND APRIL 15TH. SHOULD SEEDING BE NECESSARY BETWEEN THESE DATES, THE FOLLOWING PROCEDURE SHALL BE FOLLOWED:
   A. ONLY UNFROZEN LOAM SHALL BE USED.
   B. LOAMING, SEEDING AND MULCHING WILL NOT BE DONE OVER SNOW OR ICE COVER. IF SNOW EXISTS, IT MUST BE REMOVED PRIOR TO PLACEMENT OF SEED.
   C. WHERE PERMANENT SEEDING IS NECESSARY, ANNUAL WINTER RYE (1.2 LBS/1000 S.F.) SHALL BE SOWN INSTEAD OF THE PREVIOUSLY NOTED SEEDING RATE.
   D. WHERE TEMPORARY SEEDING IS REQUIRED, ANNUAL WINTER RYE (2.5 LBS/1000 S.F.) SHALL BE SOWN INSTEAD OF THE PREVIOUSLY NOTED SEEDING RATE.
   E. FERTILIZING, SEEDING AND MULCHING SHALL BE DONE ON LOAM THE DAY THE LOAM IS SPREAD.
   F. HAY MULCH SHALL BE SECURED WITH PHOTODEGRADABLE/BIODEGRADABLE NETTING. TRACKING BY MACHINERY ALONE WILL NOT SUFFICE. WINTER MULCHING RATES, SHALL BE DOUBLE AS SPECIFIED ABOVE IN SUBSECTION 3.A OF THE "POST CONSTRUCTION REVEGETATION" SECTION, SHOULD BE APPLIED DURING THIS PERIOD.
6. FOLLOWING FINAL SEEDING, THE SITE WILL BE INSPECTED EVERY 30 DAYS UNTIL 90% COVER HAS BEEN ESTABLISHED. RESEEDING WILL BE CARRIED OUT BY THE CONTRACTOR WITHIN 10 DAYS OF NOTIFICATION BY THE DESIGN PROFESSIONAL THAT THE EXISTING CATCH IS INADEQUATE.

MONITORING SCHEDULE

THE CONTRACTOR SHALL BE RESPONSIBLE FOR INSTALLING, MONITORING, MAINTAINING, REPAIRING, REPLACING AND REMOVING ALL OF THE EROSION AND SEDIMENTATION CONTROLS OR APPOINTING A QUALIFIED SUBCONTRACTOR TO DO SO. MAINTENANCE MEASURES WILL BE APPLIED AS NEEDED DURING THE ENTIRE CONSTRUCTION CYCLE. IMMEDIATELY FOLLOWING ANY SIGNIFICANT RAINFALL, AND AT LEAST ONCE A WEEK, A VISUAL INSPECTION WILL BE MADE OF ALL EROSION AND SEDIMENTATION CONTROLS AS FOLLOWS:

1. SILT FENCE SHALL BE INSPECTED AND REPAIRED. SEDIMENT TRAPPED BEHIND THESE BARRIERS SHALL BE EXCAVATED WHEN IT REACHES A DEPTH OF 6" AND REDISTRIBUTED TO AREAS UNDERGOING FINAL GRADING.
2. CONSTRUCTION ENTRANCE SHALL BE VISUALLY INSPECTED AND REPAIRED AS NEEDED. ANY AREAS SUBJECT TO RUTTING SHALL BE STABILIZED IMMEDIATELY. IF THE VOIDS OF THE CONSTRUCTION ENTRANCE BECOME FILLED WITH MUD, MORE CRUSHED STONE SHALL BE ADDED AS NEEDED. THE PUBLIC ROADWAY SHALL BE SWEPT AND VACUUMED SHOULD MUD BE DEPOSITED/TRACKED ONTO THEM.

STANDARDS FOR STABILIZING SITES FOR THE WINTER

THE FOLLOWING STANDARDS AND METHODOLOGIES SHALL BE USED FOR STABILIZING THE SITE DURING THE WINTER CONSTRUCTION PERIOD:

1. STANDARD FOR THE TIMELY STABILIZATION OF DISTURBED SLOPES (ANY AREA HAVING A GRADE GREATER THAN 25%) - THE CONTRACTOR WILL SEED AND MULCH ALL SLOPES TO BE VEGETATED BY SEPTEMBER 15TH. IF THE CONTRACTOR FAILS TO STABILIZE ANY SLOPE TO BE VEGETATED BY SEPTEMBER 15TH, THEN THE CONTRACTOR WILL TAKE ONE OF THE FOLLOWING ACTIONS TO STABILIZE THE SLOPE FOR LATE FALL AND WINTER.
   A. STABILIZE THE SOIL WITH TEMPORARY VEGETATION AND EROSION CONTROL MATS: BY OCTOBER 1ST THE CONTRACTOR WILL SEED THE DISTURBED SLOPE WITH WINTER RYE AT A RATE OF 3 POUNDS PER 1000 SQUARE FEET AND THEN INSTALL EROSION CONTROL MATS OR ANCHORED HAY MULCH OVER THE SEEDING AT TWICE THE RATE AS SPECIFIED ABOVE IN SUBSECTION 3.A OF THE "POST CONSTRUCTION REVEGETATION" SECTION. THE CONTRACTOR WILL MONITOR GROWTH OF THE RYE OVER THE NEXT 30 DAYS.
   B. STABILIZE THE SLOPE WITH WOOD-WASTE COMPOST: THE CONTRACTOR WILL PLACE A SIX-INCH LAYER OF WOOD-WASTE COMPOST ON THE SLOPE BY NOVEMBER 15TH. THE CONTRACTOR WILL NOT USE WOOD-WASTE COMPOST TO STABILIZE SLOPES HAVING GRADES GREATER THAN 50% (2H:IV) OR HAVING GROUNDWATER SEEPS ON THE SLOPE FACE.
   C. STABILIZE THE SLOPE WITH STONE RIPRAP: THE CONTRACTOR WILL PLACE A LAYER OF STONE RIPRAP ON THE SLOPE BY NOVEMBER 15TH. THE DEVELOPMENT'S OWNER WILL HIRE A REGISTERED PROFESSIONAL ENGINEER TO DETERMINE THE STONE SIZE NEEDED FOR STABILITY ON THE SLOPE AND TO DESIGN A FILTER LAYER FOR UNDERNEATH THE RIPRAP.

STANDARD FOR THE TIMELY STABILIZATION OF DISTURBED SOILS - BY SEPTEMBER 15TH THE CONTRACTOR WILL SEED AND MULCH ALL DISTURBED SOILS ON THE SITE. IF THE CONTRACTOR FAILS TO STABILIZE THESE SOILS BY THIS DATE, THEN THE CONTRACTOR WILL TAKE ON OF THE FOLLOWING ACTIONS TO STABILIZE THE SOIL FOR LATE FALL AND WINTER.

   A. STABILIZE THE SOIL WITH TEMPORARY VEGETATION: BY OCTOBER 1ST THE CONTRACTOR WILL SEED THE DISTURBED SOIL WITH WINTER RYE AT A SEEDING RATE OF 3 POUNDS PER 1000 SQUARE FEET, LIGHTLY MULCH THE SEEDED SOIL WITH HAY OR STRAW AT 75 POUNDS PER 1000 SQUARE FEET, AND ANCHOR THE MULCH WITH PLASTIC NETTING. THE CONTRACTOR WILL MONITOR GROWTH OF THE RYE OVER THE NEXT 30 DAYS. IF THE RYE FAILS TO GROW AT LEAST THREE INCHES OR FAILS TO COVER AT LEAST 75% OF THE DISTURBED SOIL BEFORE NOVEMBER, 1, THEN THE CONTRACTOR WILL MULCH THE AREA FOR OVER-WINTER PROTECTION AS DESCRIBED IN ITEM III OF THIS STANDARD.
   B. STABILIZE THE SOIL WITH SOD: THE CONTRACTOR WILL STABILIZE THE DISTURBED SOIL WITH PROPERLY INSTALLED SOD BY OCTOBER 1ST. PROPER INSTALLATION INCLUDES THE CONTRACTOR PINNING THE SOD ONTO THE SOIL WITH WIRE PINS, ROLLING THE SOD TO GUARANTEE CONTACT BETWEEN THE SOD AND UNDERLYING SOIL, AND WATERING THE SOD TO PROMOTE ROOT GROWTH INTO THE DISTURBED SOIL.
   C. STABILIZE THE SOIL WITH MULCH: BY NOVEMBER 15TH THE CONTRACTOR WILL MULCH THE DISTURBED SOIL BY SPREADING HAY OR STRAW AT A RATE OF AT LEAST 150 POUNDS PER 1000 SQUARE FEET ON THE AREA SO THAT NO SOIL IS VISIBLE THROUGH THE MULCH. IMMEDIATELY AFTER APPLYING THE MULCH, THE CONTRACTOR WILL ANCHOR THE MULCH WITH NETTING OR OTHER METHOD TO PREVENT WIND FROM MOVING THE MULCH OFF THE DISTURBED SOIL.

EROSION CONTROL REMOVAL

AN AREA IS CONSIDERED STABLE IF IT IS PAVED OR IF 90% GROWTH OF PLANTED SEEDS IS ESTABLISHED. ONCE AN AREA IS CONSIDERED STABLE, THE EROSION CONTROL MEASURES CAN BE REMOVED AS FOLLOWS:

1. SILT FENCE: SILT FENCE SHALL BE DISPOSED OF LEGALLY AND PROPERLY OFF-SITE. ALL SEDIMENT TRAPPED BEHIND THESE CONTROLS SHALL BE DISTRIBUTED TO AN AREA UNDERGOING FINAL GRADING OR REMOVED AND RELOCATED OFF-SITE.
2. STABILIZED CONSTRUCTION ENTRANCE: THE STABILIZED CONSTRUCTION ENTRANCE SHALL BE REMOVED ONCE THE COMPACTED ROADWAY BASE IN IN PLACE. STONE AND SEDIMENT FROM THE CONSTRUCTION ENTRANCE SHALL BE REDISTRIBUTED TO AN AREA UNDERGOING GRADING OR REMOVED AND RELOCATED OFFSITE.
3. MISCELLANEOUS: ONCE ALL THE TRAPPED SEDIMENTS HAVE BEEN REMOVED FROM THE TEMPORARY SEDIMENTATION DEVICES THE DISTURBED AREAS MUST BE REGRADED IN AN AESTHETIC MANNER TO CONFORM TO THE SURROUNDING TOPOGRAPHY. ONCE GRADED THESE DISTURBED AREAS MUST BE LOAMED (IF NECESSARY), FERTILIZED, SEEDED AND MULCHED IN ACCORDANCE WITH THE RATES PREVIOUSLY STATED.

THE ABOVE EROSION CONTROLS MUST BE REMOVED WITHIN 30 DAYS OF FINAL STABILIZATION OF THE SITE. CONFORMANCE WITH THIS PLAN AND FOLLOWING THESE PRACTICES WILL RESULT IN A PROJECT THAT COMPLIES WITH THE STATE REGULATIONS AND THE STANDARDS OF THE NATURAL RESOURCES PROTECTION ACT, AND WILL PROTECT WATER QUALITY IN AREAS DOWNSTREAM ROM THE PROJECT.

MAINE CONSTRUCTION GENERAL PERMIT REQUIRED

SUBMISSION OF A MAINE CONSTRUCTION GENERAL PERMIT (MCGP) IS REQUIRED PRIOR TO COMMENCEMENT OF ANY EXCAVATION ACTIVITIES.

INSPECTION AND MAINTENANCE (APPENDIX B)

1. INSPECTION AND MAINTENANCE REQUIREMENTS: INSPECT DISTURBED AND IMPERVIOUS AREAS, EROSION AND STORMWATER CONTROL MEASURES, AREAS USED FOR STORAGE THAT ARE EXPOSED TO PRECIPITATION, AND LOCATIONS WHERE VEHICLES ENTER OR EXIT THE SITE. INSPECT THESE AREAS AT LEAST ONCE A WEEK AS WELL AS BEFORE AND AFTER A SIGNIFICANT STORM EVENT (0.5 INCHES OF RAINFALL IN A 24-HOUR PERIOD) AND PRIOR TO COMPLETION OF PERMANENT STABILIZATION MEASURES. A PERSON WITH KNOWLEDGE OF EROSION AND STORMWATER CONTROL, INCLUDING THE STANDARDS IN THE MCGP AND ANY DEPARTMENTAL COMPANION DOCUMENT TO THE MCGP, MUST CONDUCT THE INSPECTION. THIS PERSON MUST BE IDENTIFIED IN THE INSPECTION LOG. IF BEST MANAGEMENT PRACTICES (BMPS) NEED TO BE MODIFIED OR IF ADDITIONAL BMPS ARE NECESSARY, IMPLEMENTATION MUST BE STARTED BY THE END OF THE NEXT WORKIN DAY AND COMPLETED WITHIN 7 CALENDAR DAYS AND PRIOR TO ANY STORM EVENT (RAINFALL). ALL MEASURES MUST BE MAINTAINED IN EFFECTIVE OPERATING CONDITION UNTIL AREAS AREA PERMANENTLY STABILIZED. DOCUMENTATION OF CORRECTION ACTIONS SHALL BE MAINTAINED WITH THE INSPECTION FORMS.
2. INSPECTION LOG (REPORT): A LOG (REPORT) MUST BE KEPT SUMMARIZING THE SCOPE OF THE INSPECTION, NAME(S) AND QUALIFICATIONS OF THE PERSONNEL MAKING THE INSPECTION, THE DATE(S) OF THE INSPECTION, AND MAJOR OBSERVATIONS RELATING TO OPERATION OF EROSION AND SEDIMENTATION CONTROLS AND POLLUTION PREVENTION MEASURES. MAJOR OBSERVATIONS MUST INCLUDE BMPS THAT NEED MAINTENANCE, BMPS THAT FAILED TO OPERATE AS DESIGNED OR PROVED INADEQUATE FOR A PARTICULAR LOCATION, AND LOCATIONS(S) WHERE ADDITIONAL BMPS ARE NEEDED. FOR EACH BMP REQUIRING MAINTENANCE, BMP NEEDING REPLACEMENT, AND LOCATION NEEDING ADDITIONAL BMPS, NOTE IN THE INSPECTION LOG THE CORRECT ACTION TAKEN AND WHEN IT WAS TAKEN. THE LOG MUST BE MADE ACCESSIBLE TO THE DEPARTMENT STAFF AND A COPY MUST BE PROVIDED UPON REQUEST. THE PERMITTEE SHALL RETAIN A COPY OF THE LOG FOR A PERIOD OF AT LEAST THREE YEARS FROM THE COMPLETION OF THE PERMANENT STABILIZATION.

HOUSEKEEPING (APPENDIX C)

1. SPILL PREVENTION: CONTROLS MUST BE USED TO PREVENT POLLUTANTS FROM CONSTRUCTION AND WASTE MATERIALS STORED ON SITE TO ENTER STORMWATER, WHICH INCLUDES STORAGE PRACTICES TO MINIMIZE EXPOSURE OF THE MATERIALS TO STORMWATER. THE SITE CONTRACTOR OR OPERATOR MUST DEVELOP, AND IMPLEMENT AS NECESSARY, APPROPRIATE SPILL PREVENTION, CONTAINMENT, AND RESPONSE PLANNING MEASURES.

NOTE: ANY SPILL OR RELEASE OF TOXIC OR HAZARDOUS SUBSTANCES MUST BE REPORTED TO THE DEPARTMENT. FOR OIL SPILLS, CALL 1-800-482-0777 WHICH IS AVAILABLE 24 HOURS A DAY. FOR SPILLS OF TOXIC OR HAZARDOUS MATERIAL, CALL 1-800-452-4664 WHICH IS AVAILABLE 24 HOURS A DAY. FOR MORE INFORMATION, VISIT THE DEPARTMENT'S WEBSITE AT: HTTP://WWW.MAINE.GOV/DEP/SPILLS/EMERGSPILLRESP/

2. GROUNDWATER PROTECTION: DURING CONSTRUCTION, LIQUID PETROLEUM PRODUCTS AND OTHER HAZARDOUS MATERIALS WITH THE POTENTIAL TO CONTAMINATE GROUNDWATER MAY NOT BE STORED OR HANDLED IN AREAS OF THE SITE DRAINING TO AN INFILTRATION AREA. AN "INFILTRATION AREA" IS ANY AREA OF THE SITE THAT BY DESIGN OR AS A RESULT OF SOILS, TOPOGRAPHY AND OTHER RELEVANT FACTORS ACCUMULATES RUNOFF THAT INFILTRATES INTO THE SOIL. DIKES, BERMS, SUMPS, AND OTHER FORMS OF SECONDARY CONTAINMENT THAT PREVENT DISCHARGE TO GROUNDWATER MAY BE USED TO ISOLATE PORTIONS OF THE SITE FOR THE PURPOSES OF STORAGE AND HANDLING OF THESE MATERIALS. ANY PROJECT PROPOSING INFILTRATION OF STORMWATER MUST PROVIDE ADEQUATE PRE-TREATMENT OF STORMWATER PRIOR TO DISCHARGE OF STORMWATER TO THE INFILTRATION AREA, OR PROVIDE FOR TREATMENT WITHIN THE INFILTRATION AREA, IN ORDER TO PREVENT THE ACCUMULATION OF FINES, REDUCTION IN INFILTRATION RATE, AND CONSEQUENT FLOODING AND DESTABILIZATION.

NOTE: LACK OF APPROPRIATE POLLUTANT REMOVAL BEST MANAGEMENT PRACTICES (BMPS) MAY RESULT IN VIOLATIONS OF THE GROUNDWATER QUALITY STANDARD ESTABLISHED BY 38 M.R.S.A. §465-C(1).

3. FUGITIVE SEDIMENT AND DUST: ACTIONS MUST BE TAKEN TO ENSURE THAT ACTIVITIES DO NOT RESULT IN NOTICEABLE EROSION OF SOILS OR FUGITIVE DUST EMISSIONS DURING OR AFTER CONSTRUCTION. OIL MAY NOT BE USED FOR DUST CONTROL, BUT OTHER WATER ADDITIVES MAY BE CONSIDERED AS NEEDED. A STABILIZED CONSTRUCTION ENTRANCE (SCE) SHOULD BE INCLUDED TO MINIMIZE TRACKING OF MUD AND SEDIMENT. IF OFF-SITE TRACKING OCCURS, PUBLIC ROADS SHOULD BE SWEPT IMMEDIATELY AND NO LESS THAN ONCE A WEEK AND PRIOR TO SIGNIFICANT STORM EVENTS. OPERATIONS DURING DRY MONTHS, THAT EXPERIENCE FUGITIVE DUST PROBLEMS, SHOULD WET DOWN UNPAVED ACCESS ROADS ONCE A WEEK OR MORE FREQUENTLY AS NEEDED WITH A WATER ADDITIVE TO SUPPRESS FUGITIVE SEDIMENT AND DUST.

NOTE: DEWATERING A STREAM WITHOUT A PERMIT FROM THE DEPARTMENT MAY VIOLATE STATE WATER QUALITY STANDARDS AND THE NATURAL RESOURCES PROTECTION ACT.

4. DEBRIS AND OTHER MATERIALS: MINIMIZE THE EXPOSURE OF CONSTRUCTION DEBRIS, BUILDING AND LANDSCAPING MATERIALS, TRASH, FERTILIZERS, PESTICIDES, HERBICIDES, DETERGENTS, SANITARY WASTE AND OTHER MATERIALS TO PRECIPITATION AND STORMWATER RUNOFF. THESE MATERIALS MUST BE PREVENTED FROM BECOMING A POLLUTANT SOURCE.

NOTE: TO PREVENT THESE MATERIALS FROM BECOMING A SOURCE OF POLLUTANTS, CONSTRUCTION AND POST-CONSTRUCTION ACTIVITIES RELATED TO A PROJECT MAY BE REQUIRED TO COMPLY WITH APPLICABLE PROVISION OF RULES RELATED TO SOLID, UNIVERSAL, AND HAZARDOUS WASTE, INCLUDING, BUT NOT LIMITED TO, THE MAINE SOLID WASTE AND HAZARDOUS WASTE MANAGEMENT RULES; MAINE HAZARDOUS WASTE MANAGEMENT RULES; MAINE OIL CONVEYANCE AND STORAGE RULES; AND MAINE PESTICIDE REQUIREMENTS.

5. EXCAVATION DEWATERING: EXCAVATION DEWATERING IS THE REMOVAL OF WATER FROM TRENCHES, FOUNDATIONS, COFFER DAMS, PONDS, AND OTHER AREAS WITHIN THE CONSTRUCTION AREA THAT RETAIN WATER AFTER EXCAVATION. IN MOST CASES THE COLLECTED WATER IS HEAVILY SILTED AND HINDERS CORRECT AND SAFE CONSTRUCTION PRACTICES. THE COLLECTED WATER REMOVED FROM THE PONDED AREA, EITHER THROUGH GRAVITY OR PUMPING, MUST BE SPREAD THROUGH NATURAL WOODED BUFFERS OR REMOVED TO AREAS THAT ARE SPECIFICALLY DESIGNED TO COLLECT THE MAXIMUM AMOUNT OF SEDIMENT POSSIBLE, LIKE A COFFERDAM SEDIMENTATION BASIN. AVOID ALLOWING THE WATER TO FLOW OVER DISTURBED AREAS OF THE SITE. EQUIVALENT MEASURES MAY BE TAKEN IF APPROVED BY THE DEPARTMENT.

NOTE: DEWATERING CONTROLS ARE DISCUSSED IN THE "MAINE EROSION AND SEDIMENT CONTROL BMPS, MAINE DEPARTMENT OF ENVIRONMENTAL PROTECTION."

6. AUTHORIZED NON-STORMWATER DISCHARGES: IDENTIFY AND PREVENT CONTAMINATION BY NON-STORMWATER DISCHARGES. WHERE ALLOWED NON-STORMWATER DISCHARGES EXIST, THEY MUST BE IDENTIFIED AND STEPS SHOULD BE TAKEN TO ENSURE THE IMPLEMENTATION OF APPROPRIATE POLLUTION PREVENTION MEASURES FOR THE NON-STORMWATER COMPONENT(S) OF THE DISCHARGE. AUTHORIZED NON-STORMWATER DISCHARGES ARE:.
   - DISCHARGES FROM FIREFIGHTING ACTIVITY;
   - FIRE HYDRANT FLUSHINGS;
   - VEHICLE WASHWATER IF DETERGENTS ARE NOT USED AND WASHING IS LIMITED TO THE EXTERIOR OF VEHICLES (ENGINE, UNDERCARRIAGE, AND TRANSMISSION WASHING IS PROHIBITED);
   - DUST CONTROL RUNOFF IN ACCORDANCE WITH PERMIT CONDITIONS AND APPENDIX (C)(3);
   - ROUTINE EXTERNAL BUILDING WASHDOWN, NOT INCLUDING SURFACE PAINT REMOVAL, THAT DOES NOT INVOLVE DETERGENTS;
   - PAVEMENT WASHWATER (WHERE SPILLS/LEAKS OF TOXIC OR HAZARDOUS MATERIALS HAVE NOT OCCURRED, UNLESS ALL SPILLED MATERIAL HAD BEEN REMOVED) IF DETERGENTS ARE NOT USED;
   - UNCONTAMINATED AIR CONDITIONING OR COMPRESSOR CONDENSATE;
   - UNCONTAMINATED GROUNDWATER OR SPRING WATER;
   - FOUNDATION OR FOOTER DRAIN-WATER WHERE FLOWS ARE NOT CONTAMINATED;
   - UNCONTAMINATED EXCAVATION DEWATERING (SEE REQUIREMENTS IN APPENDIX C(5));
   - POTABLE WATER SOURCES INCLUDING WATERLINE FLUSHINGS; AND
   - LANDSCAPE IRRIGATION
7. UNAUTHORIZED NON-STORMWATER DISCHARGES: THE DEPARTMENT'S APPROVAL UNDER THIS CHAPTER DOES NOT AUTHORIZE A DISCHARGE THAT IS MIXED WITH A SOURCE OF NON-STORMWATER, OTHER THAN THOSE DISCHARGES IN COMPLIANCE WITH APPENDIX C (6). SPECIFICALLY, THE DEPARTMENT'S APPROVAL DOES NOT AUTHORIZE DISCHARGES OF THE FOLLOWING:
   - WASTEWATER FROM THE WASHOUT OR CLEANOUT OF CONCRETE, STUCCO, PAINT, FORM RELEASE OILS, CURING COMPOUNDS OR OTHER CONSTRUCTION MATERIALS;
   - FUELS, OILS OR OTHER POLLUTANTS USED IN VEHICLE AND EQUIPMENT OPERATION AND MAINTENANCE;
   - SOAPS, SOLVENTS, OR DETERGENTS USED IN VEHICLE AND EQUIPMENT WASHING; AND
   - TOXIC OR HAZARDOUS SUBSTANCES FROM A SPILL OR OTHER RELEASE.

ADDITIONAL REQUIREMENTS: ADDITIONAL REQUIREMENTS MAY BE APPLIED ON A SITE-SPECIFIC BASIS.

CONSTRUCTION OVERSITE

THE APPLICANT WILL RETAIN THE SERVICES OF A PROFESSIONAL ENGINEER TO INSPECT THE CONSTRUCTION AND STABILIZATION FOR ALL STORMWATER MANAGEMENT STRUCTURES. IF NECESSARY, THE INSPECTING ENGINEER WILL INTERPRET THE POND'S CONSTRUCTION PLAN FOR THE CONTRACTOR. ONCE ALL STORMWATER MANAGEMENT STRUCTURES ARE CONSTRUCTED AND STABILIZED, THE INSPECTING ENGINEER WILL NOTIFY THE DEPARTMENT IN WRITING WITHIN 30 DAY

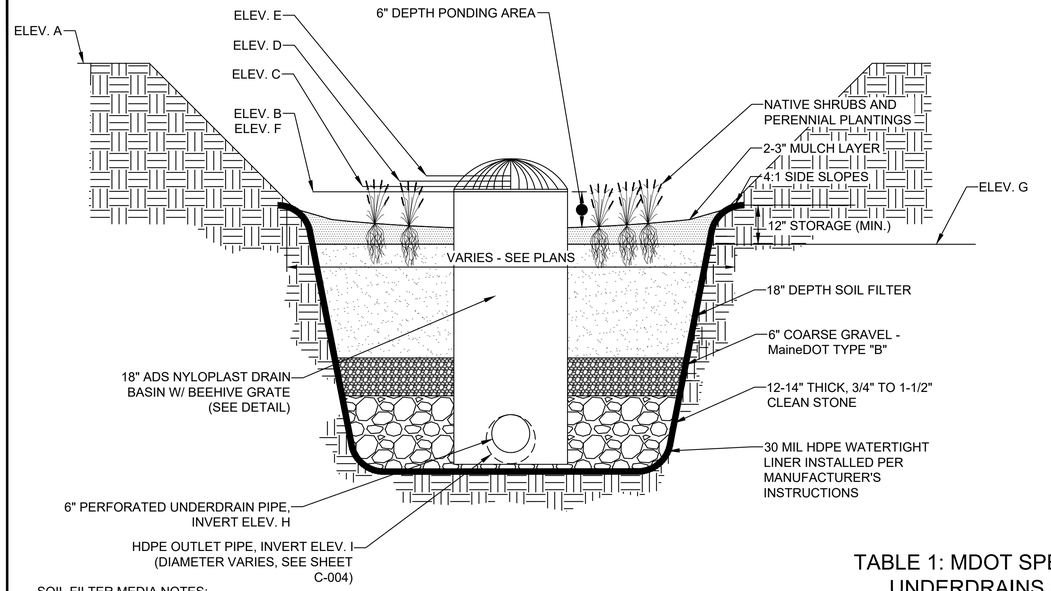

SOIL FILTER MEDIA NOTES:

SOIL FILTER MEDIA SHALL CONFORM TO MAINE DEP SOIL FILTER MEDIA OPTION 1, PER MAINE DEP STORMWATER BMP MANUAL CHAPTER 7.1. AS FOLLOWS:

1.1. SOIL FILTER MEDIA SHALL CONSIST OF A SILTY SAND SOIL OR SOIL MIXTURE COMBINED WITH A MATURE, MODERATELY FINE SHREDDED BARK OR WOOD FIBER MULCH.
1.2. THE RESULTING MIX SHALL CONTAIN NO LESS THAN 10% BY DRY WEIGHT ORGANIC MATERIAL.
1.3. THE RESULTING MIX SHALL CONTAIN 8% TO 12% PASSING THE NO. 200 SIEVE.
1.4. THE RESULTING MIX SHALL CONTAIN A MAXIMUM CLAY CONTENT OF 2%.

UNDERDRAIN OUTLET VALVE CALIBRATION NOTES:

AFTER THE COMPLETION OF INSTALLATION OF THE SOIL FILTER MEDIA, THE CONTRACTOR SHALL PERFORM THE FOLLOWING PROCEDURE TO CALIBRATE THE UNDERDRAIN OUTLET VALVE TO ACHIEVE THE 0.75"/HOUR DESIGN FLOW RATE.

1. BEGIN WITH VALVE HALF-OPEN.
2. CAREFULLY FLOOD THE BASIN UNTIL THERE IS 18" OF WATER STORED ABOVE THE SOIL FILTER MEDIA (UP TO THE HEIGHT OF OUTLET STRUCTURE RIM) WITHOUT CAUSING EROSION OF THE SOIL FILTER MEDIA.
3. RECORD THE TIME IT TAKES FOR THE 18" OF WATER TO DRAIN TO THE TOP OF THE SOIL FILTER MEDIA. THE TARGET DRAINDOWN TIME IS 24 HOURS.
4. IF THE 18" OF WATER DRAINS IN LESS THAN 24 HOURS, CLOSE THE VALVE SLIGHTLY AND REPEAT STEPS 2 & 3 ABOVE.
5. IF THE 18" OF WATER DRAINS IN MORE THAN 24 HOURS, OPEN THE VALVE SLIGHTLY AND REPEAT STEPS 2 & 3 ABOVE.
6. REPEAT THIS PROCESS UNTIL THE 18" OF WATER DRAINS IN 24 HOURS.

TABLE 1: MDOT SPECIFICATIONS FOR UNDERDRAINS (MDOT #703.22)

SIEVE SIZE	% BY WEIGHT
UNDERDRAIN TYPE B	
0'-1"	90-100
0'-0 1/2"	75-100
#4	50-100
#20	15-80
#50	0-15
#200	0-5

BIORETENTION FILTER CELL SCHEDULE

BIORETENTION FILTER CELL ID	EMBKMT. ELEV. A	WATER QUALITY STORM ELEV. B	2-YR STORM ELEV. C	10-YR STORM ELEV. D	25-YR STORM ELEV. E	TOP OF OUTLET STRUCT ELEV. F	BOTTOM OF STORAGE ELV. G	INTERIOR UNDERDRAIN INVERT (START) H	UNDERDRAIN OUTLET INVERT I	FILTER AREA (SQ. FT.)
SF-A	24.50	23.50	23.62	23.67	23.71	23.50	23.00	19.25	18.75	580
SF-B	18.50	18.00	18.11	18.16	18.19	18.00	17.50	14.25	13.75	890

2 BIORETENTION FILTER CELL

NO SCALE

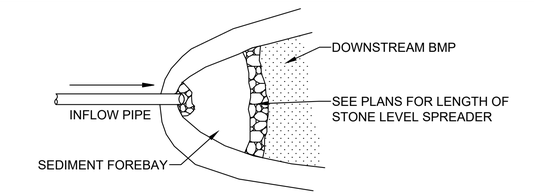

NOTES:
1. STONE SHALL BE AASHTO #3 STONE, UNIFORMLY GRADED, CLEAN.

3 LEVEL SPREADER DESIGN

NO SCALE

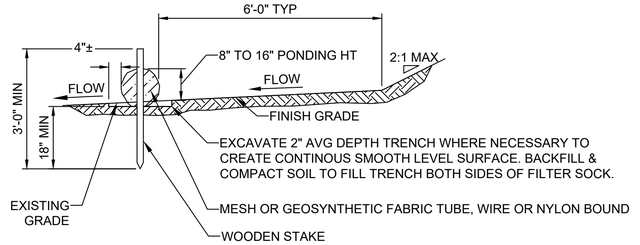

NOTES:
1. FILTER SOCKS SHALL BE INSTALLED IN CONTINUOUS SEGMENT AND IN FULL CONTACT WITH THE GROUND ON A SMOOTH LEVEL SURFACE.
2. FOLLOW MANUFACTURER'S REQUIREMENTS FOR INSTALLATION, MAINTENANCE AND REMOVAL OF FILTER SOCK MATERIALS.
3. AREAS DISTURBED BY EROSION BARRIERS SHALL BE STABILIZED AFTER REMOVAL.

1 SEDIMENT BARRIER - FILTER SOCK

NO SCALE

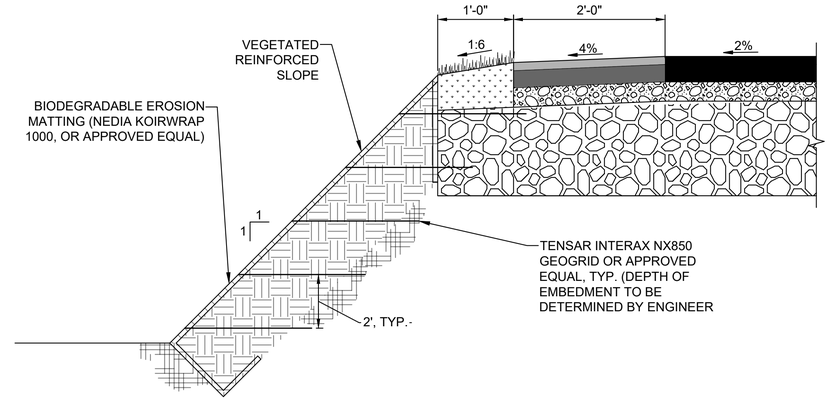

4 1:1 VEGETATED REINFORCED SLOPE

NO SCALE

FOR PERMIT

Attention: 0 1" — If this scale bar does not measure 1" then drawing is not original scale.

STATE OF MAINE — BRIAN M. MCDEVITT — PE18260 — LICENSED PROFESSIONAL ENGINEER — 6/9/2025

Designed:	DJB
Drawn:	JAM
Checked:	BJB
Approved:	BMM
P.E. No:	13033
GEI Project	2203703

GEI Consultants
GEI CONSULTANTS, INC.
5 MILK STREET
PORTLAND, ME 04101
(207)797-8901

UNIVERSITY OF NEW ENGLAND
11 HILLS BEACH RD.
BIDDEFORD, MAINE

UNIVERSITY OF NEW ENGLAND MARINE SCIENCE CENTER PIER
11 HILLS BEACH ROAD
BIDDEFORD, YORK COUNTY, MAINE

NO	DATE	ISSUE/REVISION	APP
8	6/5/2025	ADDRESS PB COMMENTS	DJB
7	4/16/2025	BIDDEFORD PERMIT APP.	DJB
6	9/17/2024	REVISED PERMIT SET	DJB
5	6/27/2024	REVISED PERMIT SET	DJB
4	9/14/2023	DEP PERMIT SET	DJB
3	6/28/2023	75% DESIGN SUBMISSION	DJB
2	2/15/2023	30% DESIGN SUBMISSION	DJB
1	12/9/2022	15% DESIGN SUB REV	DJB
0	11/11/2022	15% DESIGN SUBMISSION	DJB

SHEET NAME: **EROSION CONTROL DETAILS I**

SHEET NO.: **C-013**

DJCASTELNUOVO, VINNIE \\geiconsultants.com\data\Data_Storage\Working\UNIVERSITY OF NEW ENGLAND\2203703 UNE Marine Science Center Pier\00_CAD\Design\Sheets\2203703-C-DETAILS.dwg - 6/9/2025

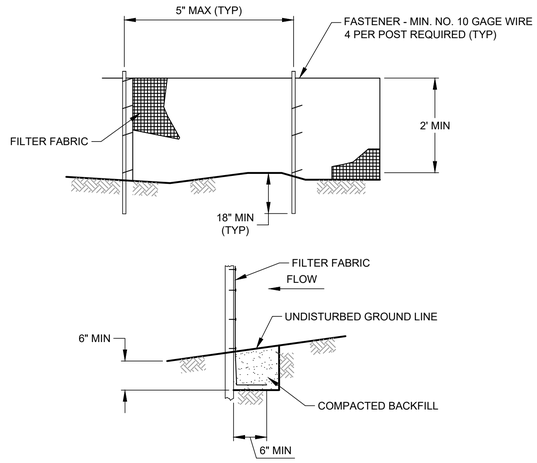

NOTES:
1. TEMPORARY SEDIMENT FENCE SHALL BE INSTALLED PRIOR TO ANY GRADING WORK IN THE AREA TO BE PROTECTED. THEY SHALL BE MAINTAINED THROUGHOUT THE CONSTRUCTION PERIOD AND REMOVED IN CONJUNCTION WITH THE FINAL GRADING AND SITE STABILIZATION.
2. FILTER FABRIC SHALL MEET THE REQUIREMENTS OF MATERIAL SPECIFICATION 592 GEOTEXTILE TABLE 1 OR 2, CLASS L WITH EQUIVALENT OPENING SIZE OF AT LEAST 30 FOR NONWOVEN AND 50 FOR WOVEN.
3. FENCE POSTS SHALL BE EITHER WOOD POST WITH A MINIMUM CROSS-SECTIONAL AREA OF 3 SQ. IN. OR A STANDARD STEEL POST.

5 SILT FENCE

NO SCALE

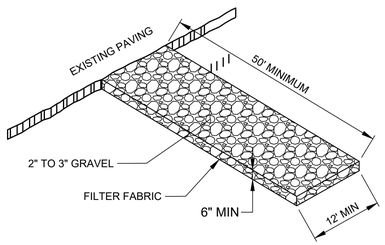

8 STABILIZED CONSTRUCTION ENTRANCE

NO SCALE

NOTES:
1. THE ENTRANCE/EXIT PAD SHOULD HAVE A LENGTH OF 50 FEET OR MORE AND A 12-FOOT MINIMUM WIDTH (OR AS APPROPRIATE TO CONTAIN THE WHEEL BASE OF CONSTRUCTION VEHICLES PLUS 3 FEET ON EITHER SIDE).
2. THE PAD SHOULD BE 6 INCHES OR MORE THICK WITH ANGULAR AGGREGATE (2-3 INCH DIAMETER). APPROPRIATE RECLAIMED CONCRETE MATERIAL MAY BE USED.
3. THE AGGREGATE SHOULD BE PLACED OVER A GEOTEXTILE FILTER TO PREVENT THE STONES FROM PUSHING INTO THE NATIVE SOIL.
4. AT THE BOTTOM OF SLOPES, A DIVERSION RIDGE SHOULD BE PROVIDED TO INTERCEPT RUNOFF.
5. BERMS MAY BE NECESSARY TO DIVERT WATER AROUND ANY EXPOSED SOIL, AND RUNOFF SHOULD BE DIRECTED TO A SEDIMENT TRAP.
6. THE WHEELS OF CONSTRUCTION EQUIPMENT MAY BE WASHED PRIOR TO EXITING THE SITE. WASHING SHOULD BE PERFORMED IN AN AREA THAT DRAINS TO A SEDIMENT TRAP OR BASIN.
7. THE PAD SHOULD BE INSPECTED WEEKLY, AND BEFORE AND AFTER EACH STORM. THE PAD MAY HAVE TO BE REPLACED IF THE VOIDS BECOME FILLED WITH SEDIMENT. STREET SWEEPING MAY BE NECESSARY

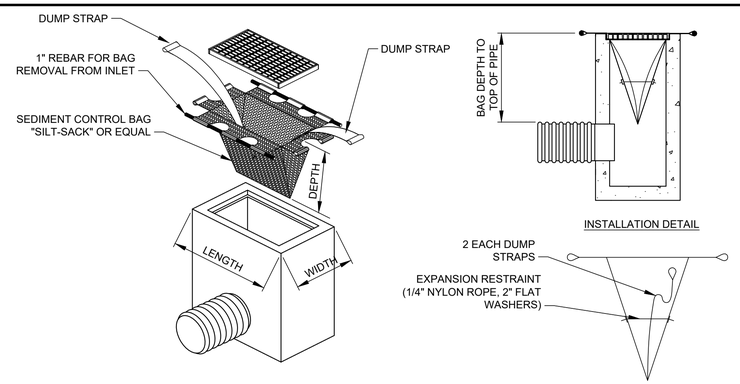

CB STYLE	LENGTH	WIDTH	DEPTH
TYPE 1 CB	2'-0"	1'-8"	VARIES
TYPCE 1 CCI	2'-5 1/2"	2'-0"	VARIES
USA G2	2'-8 1/2"	2'-3 1/2"	VARIES

NOTES:
1. THE DIMENSION CHART ABOVE IS FOR STANDARD CATCH BASINS AND INLETS ONLY. THE CONTRACTOR IS RESPONSIBLE FOR PROVIDING THE CORRECT SIZE DEVICE FOR EACH INLET.
2. FOR NON-STANDARD CATCH BASINS AND INLETS, THE CONTRACTOR SHALL MEASURE DIMENSIONS IN THE FIELD AND ORDER THE APPROPRIATE SIZE(S).
3. THE INLET SEDIMENT CONTROL DEVICE SHALL BE OF HIGH FLOW DESIGN (200 GAL/MIN/FT), AS PER THE MANUFACTURER'S SPECS.
4. THE SEDIMENT CONTROL DEVICE SHALL BE INSPECTED DAILY BY THE CONTRACTOR AND MAINTAINED A MINIMUM ONCE PER MONTH OR WITHIN THE 48 HOURS FOLLOWING A STORM EVENT. FILTER SHALL BE CLEANED IN A MANNER WHICH ENSURES THAT ALL SEDIMENT REMAINS ON SITE.
5. SUBSTITUTION OF A SHEET OF FILTER FABRIC PLACED OVER THE OPENING OF THE INLET IS NOT APPROVED.
6. RECESSED CURB INLET CATCH BASINS MUST BE BLOCKED WHEN USING FILTER FABRIC INLET SACKS, SIZE OF FILTER INLET SACK TO BE DETERMINED BY MANUFACTURER.
7. THE FILTER SHALL BE REPLACED OR CLEANED WHEN THE BAG BECOMES HALF FULL.
8. SEE INLET PROTECTION NOTES STD. DETAIL E3.

6 SILT SACK INLET PROTECTION

SCALE: N.T.S.

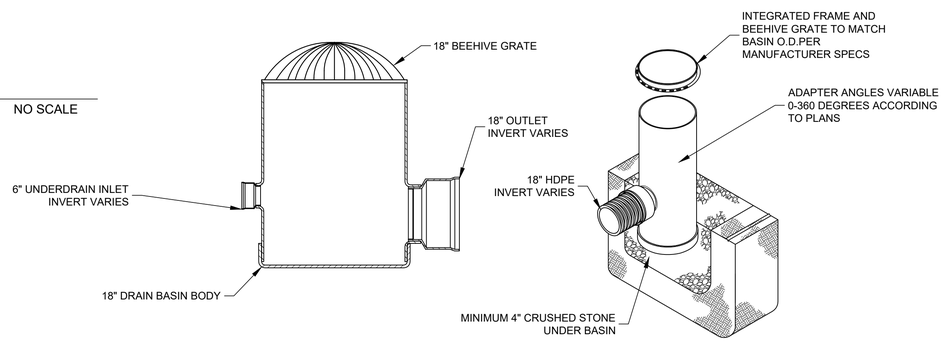

9 ADS NYLOPLAST 18"DRAIN BASIN W/BEEHIVE GRATE

NO SCALE

NOTES:
1. THE SOIL SURFACE SHOULD BE FINELY GRADED AND SMOOTH FOR THE BLANKET TO HAVE DIRECT CONTACT WITH THE SOIL AND TO PREVENT UNDERMINING. EROSION CONTROL BLANKETS PERFORM BEST ON LOAMY SOILS AND SHOULD NOT BE USED ON ROCKY SITES OR SHALLOW SOILS.
2. SEED SHOULD BE SOWN BEFORE INSTALLING THE EROSION CONTROL BLANKET.
3. ALWAYS UNROLL THE BLANKET DOWNHILL WITHOUT STRETCHING AND ANCHOR THE UPSLOPE EDGE IN A 12 INCH DEEP TRENCH THAT IS BACKFILLED AND TAMPED.
4. OVERLAP SHINGLE STYLE A MINIMUM OF 12 INCHES AT THE TOP OF EACH ROW AND 4 INCHES AT THE EDGES OF PARALLEL ROWS. ANCHOR ALONG THE OVERLAP WITH A MAXIMUM SPACING OF 3 FEET OR AS REQUIRED BY THE MANUFACTURER.

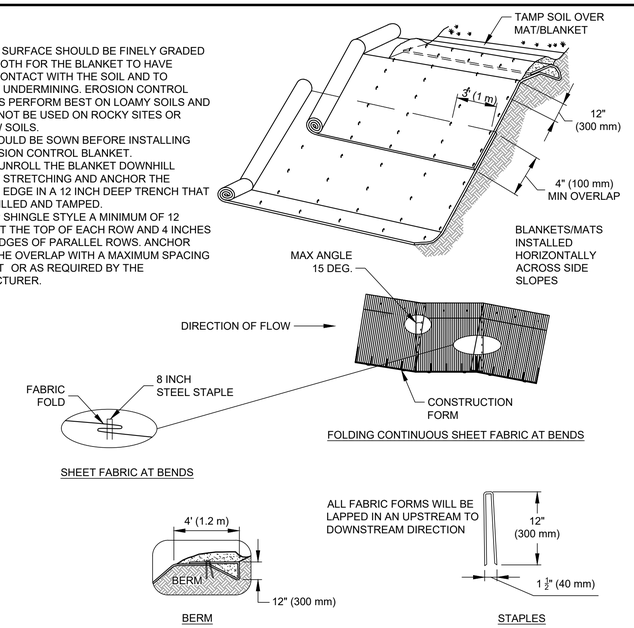

7 BIODEGRADABLE STABILIZATION MATTING

NO SCALE

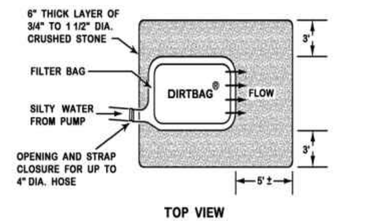

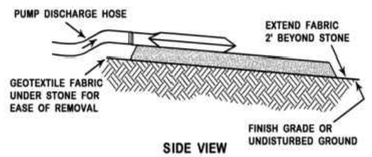

NOTES:
1. INSTALL THE FILTER BAG PRIOR TO INITIATING ANY ACTIVITIES WHICH WILL REQUIRE DEWATERING.
2. THE TYPE OF FABRIC SHOULD BE BASED ON THE SIZE OF SOIL PARTICLES TO BE TRAPPED (I.E. A WOVEN MATERIAL FOR COARSE PARTICLES AND A NONWOVEN MATERIAL FOR FINER PARTICLES).
3. A FILTER BAG SHOULD BE LOCATED IN AN AREA MOSTLY LEVEL (WITH LESS THAN 5% SLOPE). A PAD OF CRUSHED GRAVEL MAY BE PROVIDED.
4. AVOID DISCHARGING TO AN AREA THAT IS BARE OF VEGETATION OR NEWLY VEGETATED. ANY SIGN OF EROSION OR CHANNELIZATION FROM THE DISCHARGED WATER REQUIRES IMMEDIATELY CORRECTION.
5. FILTER BAGS HAVE A FINITE CAPACITY FOR SEDIMENT COLLECTION AND MAY BE PRONE TO PLUGGING. AVOID OVER-PRESSURIZING THE BAG OR IT MAY BURST.

10 GEOTEXTILE FILTER BAG

NO SCALE

FOR PERMIT

Attention:
0 1"
If this scale bar does not measure 1" then drawing is not original scale.

STATE OF MAINE
BRIAN M. MCDEVITT
PE18260
LICENSED
PROFESSIONAL ENGINEER
6/9/2025

Designed:	DJB
Drawn:	JAM
Checked:	BJB
Approved:	BMM
P.E. No:	13033
GEI Project	2203703

GEI Consultants
GEI CONSULTANTS, INC.
5 MILK STREET
PORTLAND, ME 04101
(207)797-8901

UNIVERSITY OF NEW ENGLAND
11 HILLS BEACH RD.
BIDDEFORD, MAINE

UNIVERSITY OF NEW ENGLAND MARINE SCIENCE CENTER PIER
11 HILLS BEACH ROAD
BIDDEFORD, YORK COUNTY, MAINE

NO	DATE	ISSUE/REVISION	APP
8	6/5/2025	ADDRESS PB COMMENTS	DJB
7	4/16/2025	BIDDEFORD PERMIT APP.	DJB
6	9/17/2024	REVISED PERMIT SET	DJB
5	6/27/2024	REVISED PERMIT SET	DJB
4	9/14/2023	DEP PERMIT SET	DJB
3	6/28/2023	75% DESIGN SUBMISSION	DJB
2	2/15/2023	30% DESIGN SUBMISSION	DJB
1	12/9/2022	15% DESIGN SUB REV	DJB
0	11/11/2022	15% DESIGN SUBMISSION	DJB

SHEET NAME
EROSION CONTROL DETAILS II

SHEET NO.
C-014

DICASTELNUOVO, VINNIE \\geiconsultants.com\data\Data_Storage\Working\UNIVERSITY OF NEW ENGLAND\2203703 UNE Marine Science Center Pier\00_CAD\Design\Sheets\2203703-C-DETAILS.dwg - 6/9/2025

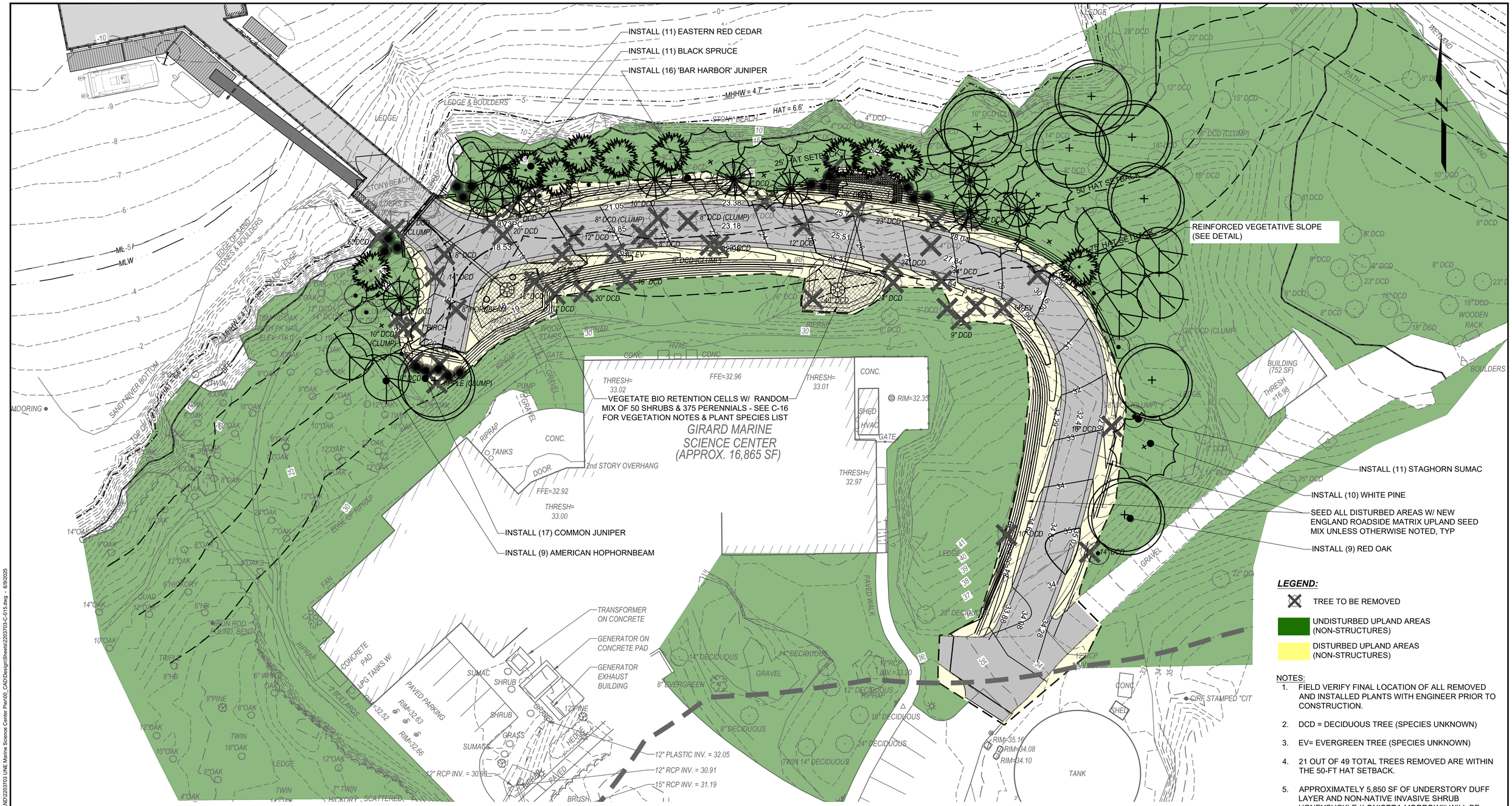

PLAN
SCALE: 1" = 20'

LEGEND:

- TREE TO BE REMOVED
- UNDISTURBED UPLAND AREAS (NON-STRUCTURES)
- DISTURBED UPLAND AREAS (NON-STRUCTURES)

NOTES:

1. FIELD VERIFY FINAL LOCATION OF ALL REMOVED AND INSTALLED PLANTS WITH ENGINEER PRIOR TO CONSTRUCTION.
2. DCD = DECIDUOUS TREE (SPECIES UNKNOWN)
3. EV= EVERGREEN TREE (SPECIES UNKNOWN)
4. 21 OUT OF 49 TOTAL TREES REMOVED ARE WITHIN THE 50-FT HAT SETBACK.
5. APPROXIMATELY 5,850 SF OF UNDERSTORY DUFF LAYER AND NON-NATIVE INVASIVE SHRUB HONEYSUCKLE (*LONICERA MORROWII*) WILL BE REMOVED WITHIN THE 50-FT HAT SETBACK.

FOR PERMIT

Attention:
0 1"
If this scale bar does not measure 1" then drawing is not original scale.

STATE OF MAINE
BRIAN M. MCDEVITT
PE18260
LICENSED
PROFESSIONAL ENGINEER
6/9/2025

Designed:	DJB
Drawn:	JAM
Checked:	BJB
Approved:	BMM
P.E. No:	13033
GEI Project	2203703

GEI Consultants
GEI CONSULTANTS, INC.
5 MILK STREET
PORTLAND, ME 04101
(207)797-8901

UNE
UNIVERSITY OF NEW ENGLAND
11 HILLS BEACH RD.
BIDDEFORD, MAINE

UNIVERSITY OF NEW ENGLAND MARINE SCIENCE CENTER PIER
11 HILLS BEACH ROAD
BIDDEFORD, YORK COUNTY, MAINE

NO	DATE	ISSUE/REVISION	APP
8	6/5/2025	ADDRESS PB COMMENTS	DJB
7	4/16/2025	BIDDEFORD PERMIT APP.	DJB
6	9/17/2024	REVISED PERMIT SET	DJB
5	6/27/2024	REVISED PERMIT SET	DJB
4	9/14/2023	DEP PERMIT SET	DJB
3	6/28/2023	75% DESIGN SUBMISSION	DJB
2	2/15/2023	30% DESIGN SUBMISSION	DJB
1	12/9/2022	15% DESIGN SUB REV	DJB
0	11/11/2022	15% DESIGN SUBMISSION	DJB

SHEET NAME
REVEGETATION PLAN

SHEET NO.
C-015

DICASTELNUOVO, VINNIE B:\Working\UNIVERSITY OF NEW ENGLAND\2203703 UNE Marine Science Center Pier\00_CAD\Design\Sheets\2203703-C-015.dwg - 6/9/2025

VEGETATION GENERAL NOTES:

1. VEGETATION MANAGEMENT (INSTALLATION AND MAINTENANCE) SHALL COMPLY WITH CITY OF BIDDEFORD SHORELAND ZONING ORDINANCE REQUIREMENTS.
   - 1.1. ALL REVEGETATION MUST OCCUR ALONG THE SAME SEGMENT OF SHORELINE AND IN AS CLOSE OF PROXIMITY AS PRACTICAL TO THE LOCATION WHERE THE VEGETATION WAS REMOVED.
   - 1.2. ALL VEGETATION REMOVED MUST BE REPLACED WITH NATIVE, NON-INVASIVE SPECIES.
   - 1.3. AT LEAST THREE DIFFERENT SPECIES OF TREES AND WOODY VEGETATION UNDER THREE FEET IN HEIGHT SHALL BE USED.
   - 1.4. NO MORE THAN ONE SPECIES OF TREES AND WOODY VEGETATION UNDER THREE FEET IN HEIGHT SHALL MAKE UP MORE THAN 50% OF THE TOTAL NUMBER OF TREES AND WOOD VEGETATION UNDER THREE FEET IN HEIGHT PLANTED.
   - 1.5. SURVIVAL OF ALL VEGETATION MUST BE MAINTAINED FOR A MINIMUM OF FIVE YEARS.
2. ALL REMOVED NON-NATIVE PLANT MATERIAL SHALL BE PROPERLY DISPOSED OF BY BURNING ON-SITE OR DISPOSAL AT A WASTE RECEIVING FACILITY.
3. AN UPDATED LIST OF NON-NATIVE INVASIVE VEGETATION IS MAINTAINED BY THE DEPARTMENT OF AGRICULTURE, CONSERVATION AND FORESTRY'S NATURAL AREAS PROGRAM:
4. HTTPS://WWW.MAINE.GOV/DACF/MNAP/FEATURES/INVASIVE_PLANTS/INVASIVES.HTM
5. PLANT SPECIES SUBSTITUTIONS SHALL BE APPROVED BY THE OWNER. CONTRACTOR SHALL REFERENCE THE FOLLOWING RESOURCES FOR COASTAL PLANT LIST GUIDELINES: CUMBERLAND COUNTY SOIL & WATER CONSERVATION DISTRICT - COASTAL PLANTING GUIDE; UNIVERSITY OF MAINE COOPERATE EXTENSION; AND/OR THE WILD SEED PROJECT.

VEGETATION INSTALLATION NOTES:

1. THE CONTRACTOR SHALL TAKE CARE NOT TO DAMAGE VEGETATION WITHIN THE CONSTRUCTION AREA UNLESS NOTED TO BE REMOVED, LIMBED OR PRUNED. THIS MAY REQUIRE HAND EXCAVATION WITHIN TREE DRIPLINES.
2. ALL PLANT MATERIAL SELECTIONS SHALL BE APPROVED BY THE OWNER PRIOR TO INSTALLATION.
3. ALL NEW PLANTING MATERIAL SHALL CONFORM TO THE MINIMUM GUIDELINES ESTABLISHED FOR NURSERY STOCK PUBLISHED BY THE AMERICAN ASSOCIATION OF NURSERYMEN, INC. IN ADDITION ALL NEW PLANT MATERIAL FOR THE PROJECT SHALL BE OF THE HIGHEST SPECIMEN QUALITY.
4. ALL NEW PLANTS SHALL BE BALLED AND BURLAPPED OR CONTAINER GROWN UNLESS OTHERWISE NOTED ON THE PLANT LIST.
5. CONTRACTOR SHALL SUPPLY ALL NEW PLANT MATERIAL IN QUANTITIES SUFFICIENT TO COMPLETE THE PLANTING SHOWN ON THE DRAWINGS.
6. NO TREES SHALL BE PLANTED BEFORE ACCEPTANCE OF ROUGH GRADING. TREES SHALL BEAR SAME RELATIONSHIP TO FINISH GRADE AS THEY BORE TO PREVIOUS GRADE.
7. STAKE LOCATION OF ALL PROPOSED PLANTING FOR APPROVAL BY THE OWNER PRIOR TO COMMENCEMENT OF PLANTING.
8. ALL EXISTING TREES TO REMAIN SHALL BE PROPERLY PROTECTED, PRUNED AND FERTILIZED PER THE SPECIFICATIONS.
9. ALL LAWN AREAS DISTURBED BY CONSTRUCTION OPERATIONS INSIDE AND OUTSIDE THE LIMIT OF WORK SHALL BE LOAMED AND SEEDED AS SPECIFIED.
10. ALL PLANT BEDS ARE TO RECEIVE THREE INCHES (4") OF SHREDDED BARK MULCH AS SPECIFIED.
11. ANY PROPOSED SUBSTITUTIONS OF PLANT SPECIES SHALL BE MADE WITH PLANTS OF EQUIVALENT OVERALL FORM, HEIGHT, BRANCHING HABIT, FLOWER, LEAF, COLOR, FRUIT AND CULTURE ONLY AS APPROVED BY OWNER.
12. ALL AREAS TO BE SEEDED SHALL RECEIVE SOIL PREPARATION AS SPECIFIED PRIOR TO SEEDING, UNLESS OTHERWISE NOTED ON PLAN.
13. PREPARE ALL PLANT PITS WITH PLANTING SOIL TO A MINIMUM DEPTH MATCHING THE DEPTH OF ROOT BALLS.
14. NATIVE PLANT SPECIES REMOVED SHALL BE REPLANTED WITH IN-KIND SPECIES AND/OR THOSE PROVIDE IN THE PLANT LIST.

PLANT LIST

KEY	QTY	*SCIENTIFIC NAME* COMMON NAME	SIZE	SPACING	ROOTING	MATURE SIZE	NOTES
TREES							
CC	9	*CARPINUS CAROLINIANA* AMERICAN HORNBEAM	1" CAL	10' O.C.	B&B / CONT	25' HT / 25' W	REPLACE REMOVED TREES 1 FOR 1 AT LOCATIONS AS INDICATED ON THE REVEGETATION PLAN.
JV	10	*JUNIPERUS VIRGINIANA* EASTERN RED CEDAR	3'-4' HT	10' O.C.	B&B / CONT	35' HT / 15' W	
PM	10	*PICEA MARIANA* BLACK SPRUCE	5'-6' HT	10' O.C.	B&B / CONT	35' HT / 15' W	
PS	10	*PINUS STROBUS* WHITE PINE	6'-7' HT	15' O.C.	B&B / CONT	75' HT / 35' W	
QR	9	*QUERCUS RUBRA* RED OAK	1.5 - 2" CAL	25' O.C.	B&B / CONT	75' HT / 50' W	
SHRUBS							
JC	17	*JUNIPERUS COMMUNIS* COMMON JUNIPER	18"-24" HT	5' O.C.	CONT	10' HT / 10' W	PLANT SHRUBS AT LOCATIONS AS INDICATED ON THE REVEGETATION PLAN.
JH	16	*JUNIPERUS HORIZONTALS 'BAR HARBOR'* BAR HARBOR CREEPING JUNIPER	5-7 PPP	6' O.C.	CONT	1.5' HT / 10' W	
RT	11	*RHUS TYPHINA* STAGHORN SUMAC	18"-24" HT	10' O.C.	B&B / CONT	20' HT / 25' W	
BIORETENTION CELL PLANTING							
AS	75	*ASCLEPIAS SYRIACA* COMMON MILKWEED	5-7 PPP	18" O.C.	CONT	2' HT / 3' W	PROVIDE A RANDOM MIX OF EQUAL QUANTITIES OF EACH PERENNIAL AND SHRUB SPECIES THROUGHOUT BIO RETENTION CELLS. PLANT EACH SPECIES AS INDIVIDUALS OR IN GROUPINGS OF THREE.
IR	75	*IRIS VERSICOLOR* BLUE FLAG IRIS	5-7 PPP	18" O.C.	CONT	18"' HT / 2' W	
IV	25	*ILEX VERTICILLATA* WINTERBERRY	12"-18" HT	3' O.C.	CONT	8' HT / 8' W	
MP	25	*MYRICA PENSYLVANICA* NORTHERN BAYBERRY	12"-18" HT	3' O.C.	CONT	8' HT / 8' W	
PV	75	*PANICUM VIRGATUM* SWITCHGRASS	5-7 PPP	18" O.C.	CONT	3' HT / 2' W	
SN	75	*SYMPHYOTRICHUM NOVAE-ANGLIAE* NEW ENGLAND ASTER	5-7 PPP	18" O.C.	CONT	2' HT / 3' W	
SS	75	*SOLIDAGO SEMPERVIRENS* SEASIDE GOLDENROD	5-7 PPP	18" O.C.	CONT	2' HT / 3' W	
SEED MIX							
SOW NEW ENGLAND ROADSIDE MATRIX UPLAND SEED MIX ON ALL DISTURBED AREAS UNLESS OTHERWISE NOTED ON REVEGETATION PLAN.							

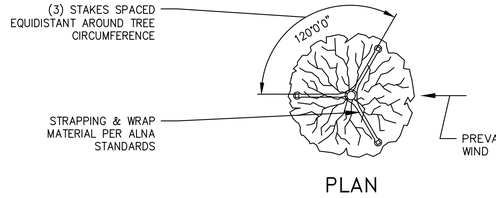

PLAN

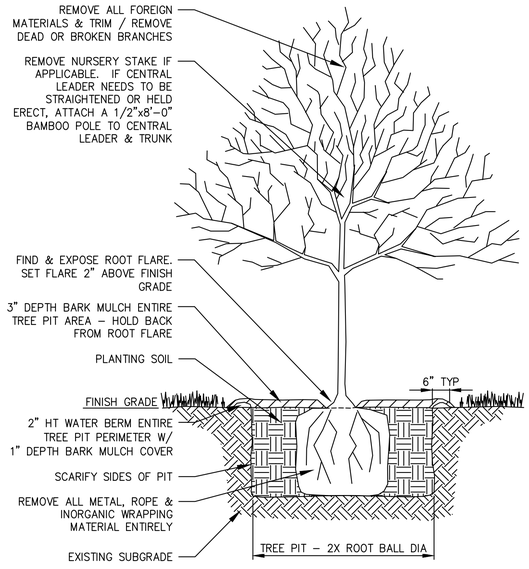

TREE INSTALLATION </= 10–FT

NOT TO SCALE

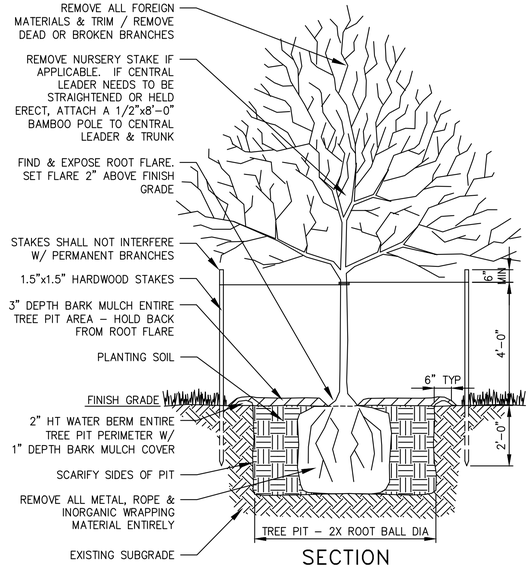

SECTION

TREE INSTALLATION > 10–FT

NOT TO SCALE

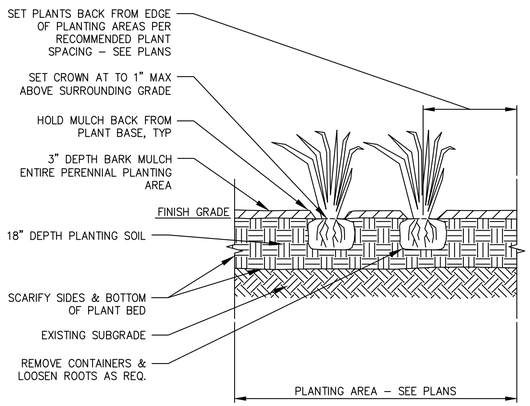

PERENNIAL INSTALLATION

NOT TO SCALE

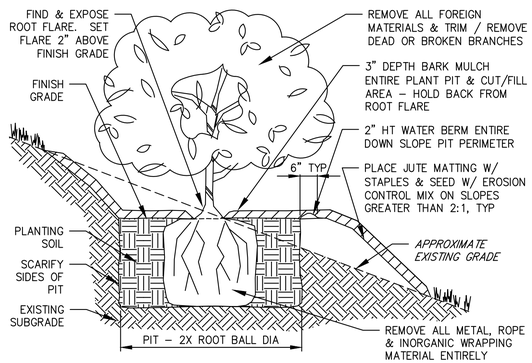

SHRUB INSTALLATION ON SLOPE

NOT TO SCALE

FOR PERMIT

ELEVATION	MLLW	NAVD88*
BFE	+19.0	+14.0
HAT	+11.6	+6.6
MHHW	+9.7	+4.7
MHW	+9.3	+4.3
MSL	+4.8	-0.2
MLW	+0.3	-4.7
MLLW	0.0	-5.0

*PROJECT DATUM

Attention:

0 1"

If this scale bar does not measure 1" then drawing is not original scale.

STATE OF MAINE BRIAN M. MCDEVITT PE18260 LICENSED PROFESSIONAL ENGINEER

6/9/2025

Designed:	DJB
Drawn:	JAM
Checked:	BJB
Approved:	BMM
P.E. No:	13033
GEI Project	2203703

GEI Consultants

GEI CONSULTANTS, INC.
5 MILK STREET
PORTLAND, ME 04101
(207)797-8901

UNIVERSITY OF NEW ENGLAND

11 HILLS BEACH RD.
BIDDEFORD, MAINE

UNIVERSITY OF NEW ENGLAND MARINE SCIENCE CENTER PIER

11 HILLS BEACH ROAD
BIDDEFORD, YORK COUNTY, MAINE

NO	DATE	ISSUE/REVISION	APP
8	6/5/2025	ADDRESS PB COMMENTS	DJB
7	4/16/2025	BIDDEFORD PERMIT APP.	DJB
6	9/17/2024	REVISED PERMIT SET	DJB
5	6/27/2024	REVISED PERMIT SET	DJB
4	9/14/2023	DEP PERMIT SET	DJB
3	6/28/2023	75% DESIGN SUBMISSION	DJB
2	2/15/2023	30% DESIGN SUBMISSION	DJB
1	12/9/2022	15% DESIGN SUB REV	DJB
0	11/11/2022	15% DESIGN SUBMISSION	DJB

SHEET NAME

REVEGETATION NOTES, DETAILS AND SCHEDULES

SHEET NO.

C-016

DICASTELNUOVO, VINNIE \\geiconsultants.com\data\Data_Storage\Working\UNIVERSITY OF NEW ENGLAND\2203703 UNE Marine Science Center Pier\00_CAD\Design\Sheets\2203703-C-016.dwg - 6/6/2025

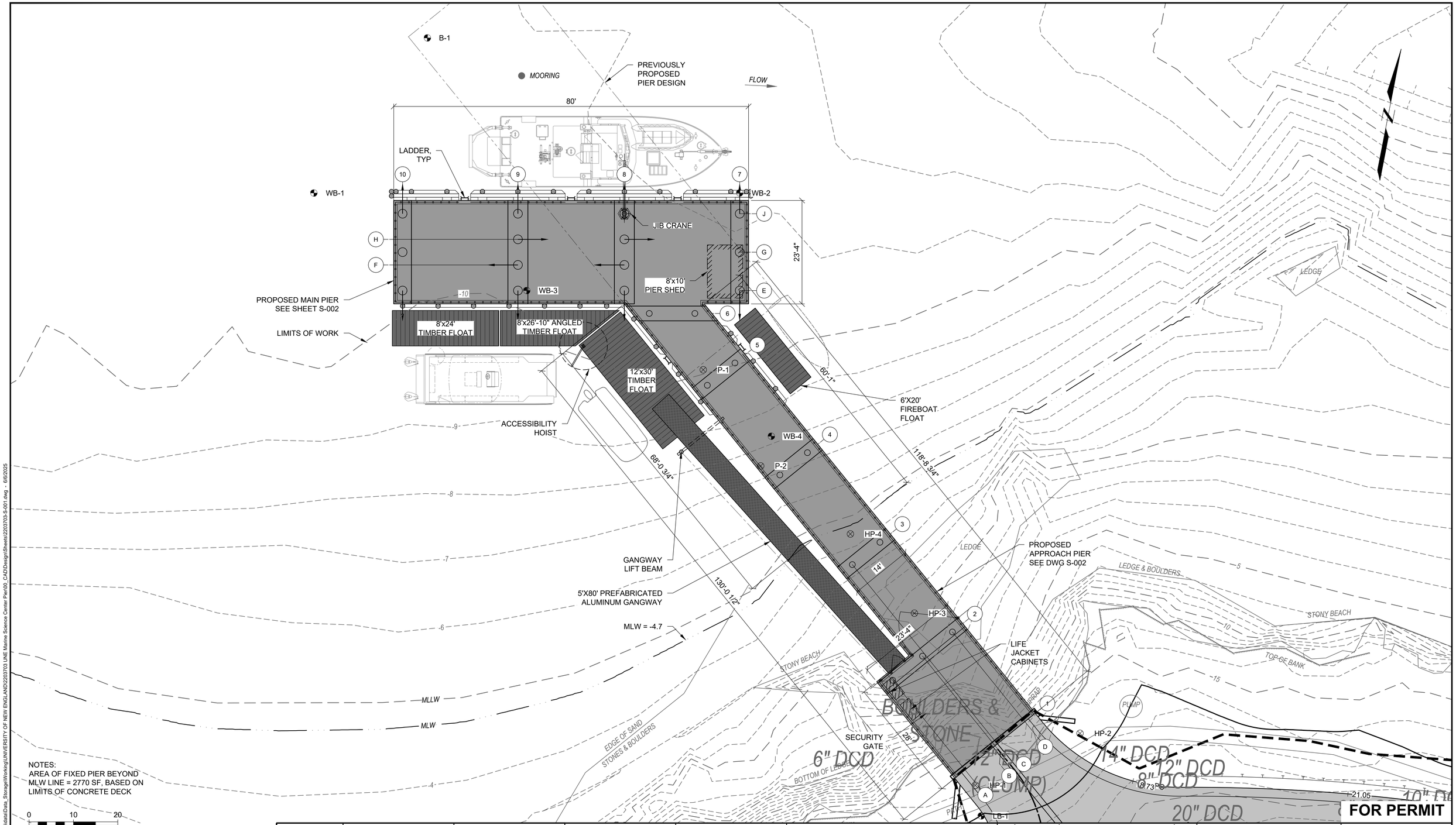

NOTES:
AREA OF FIXED PIER BEYOND MLW LINE = 2770 SF, BASED ON LIMITS OF CONCRETE DECK

0 10 20
SCALE, FEET

ELEVATION	MLLW	NAVD88*
BFE	+19.0	+14.0
HAT	+11.6	+6.6
MHHW	+9.7	+4.7
MHW	+9.3	+4.3
MSL	+4.8	-0.2
MLW	+0.3	-4.7
MLLW	0.0	-5.0

*PROJECT DATUM

Attention:
0 1"
If this scale bar does not measure 1" then drawing is not original scale.

STATE OF MAINE
DANIEL J. BANNON
No. 13033
LICENSED PROFESSIONAL ENGINEER
06/10/2025

Designed:	DJB
Drawn:	JAM
Checked:	BJB
Approved:	BMM
P.E. No:	13033
GEI Project	2203703

GEI Consultants
GEI CONSULTANTS, INC.
5 MILK STREET
PORTLAND, ME 04101
(207)797-8901

UNIVERSITY OF NEW ENGLAND
11 HILLS BEACH RD.
BIDDEFORD, MAINE

UNIVERSITY OF NEW ENGLAND MARINE SCIENCE CENTER PIER

11 HILLS BEACH ROAD
BIDDEFORD, YORK COUNTY, MAINE

NO	DATE	ISSUE/REVISION	APP
8	6/5/2025	ADDRESS PB COMMENTS	DJB
7	4/16/2025	BIDDEFORD PERMIT APP.	DJB
6	9/17/2024	REVISED PERMIT SET	DJB
5	6/27/2024	REVISED PERMIT SET	DJB
4	9/14/2023	DEP PERMIT SET	DJB
3	6/28/2023	75% DESIGN SUBMISSION	DJB
2	2/15/2023	30% DESIGN SUBMISSION	DJB
1	12/9/2022	15% DESIGN SUB REV	DJB
0	11/11/2022	15% DESIGN SUBMISSION	DJB

SHEET NAME
PIER LAYOUT PLAN

SHEET NO.
S-001

FOR PERMIT

DICASTELNUOVO, VINNIE \\geiconsultants.com\data\Data_Storage\Working\UNIVERSITY OF NEW ENGLAND\2203703 UNE Marine Science Center Pier\00_CAD\Design\Sheets\2203703-S-001.dwg - 6/6/2025

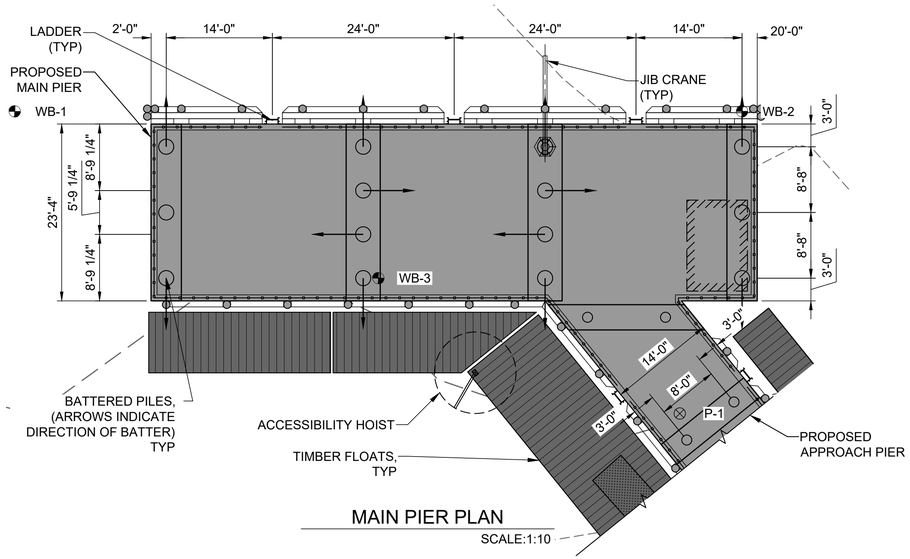

MAIN PIER PLAN

SCALE:1:10

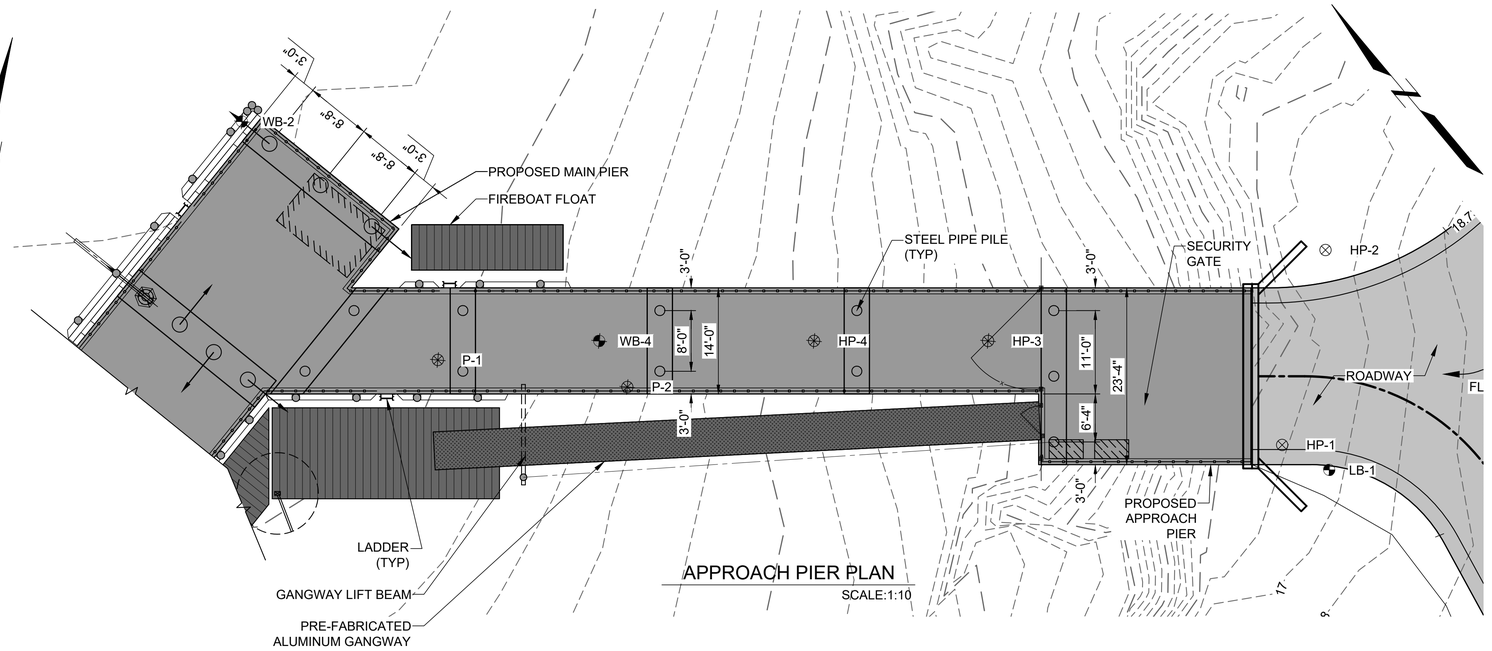

APPROACH PIER PLAN

SCALE:1:10

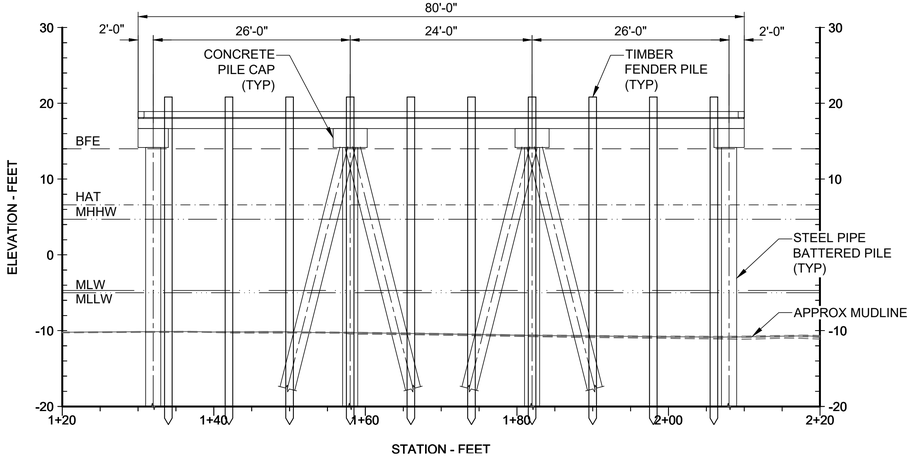

MAIN PIER ELEVATION

SCALE:1:10

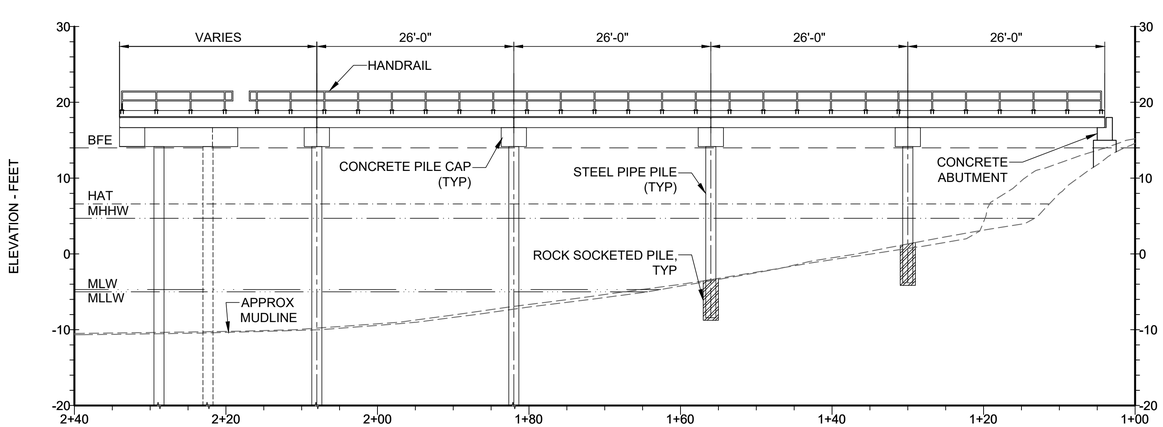

APPROACH PIER ELEVATION

SCALE:1:10

0 10 20

SCALE, FEET

ELEVATION	MLLW	NAVD88*
BFE	+19.0	+14.0
HAT	+11.6	+6.6
MHHW	+9.7	+4.7
MHW	+9.3	+4.3
MSL	+4.8	-0.2
MLW	+0.3	-4.7
MLLW	0.0	-5.0

*PROJECT DATUM

FOR PERMIT

Attention:

0 1"

If this scale bar does not measure 1" then drawing is not original scale.

STATE OF MAINE
DANIEL J. BANNON
No. 13033
LICENSED PROFESSIONAL ENGINEER

06/10/2025

Designed:	DJB
Drawn:	JAM
Checked:	BJB
Approved:	BMM
P.E. No:	13033
GEI Project	2203703

GEI Consultants

GEI CONSULTANTS, INC.
5 MILK STREET
PORTLAND, ME 04101
(207)797-8901

UNIVERSITY OF NEW ENGLAND

11 HILLS BEACH RD.
BIDDEFORD, MAINE

UNIVERSITY OF NEW ENGLAND MARINE SCIENCE CENTER PIER

11 HILLS BEACH ROAD
BIDDEFORD, YORK COUNTY, MAINE

NO	DATE	ISSUE/REVISION	APP
8	6/5/2025	ADDRESS PB COMMENTS	DJB
7	4/16/2025	BIDDEFORD PERMIT APP.	DJB
6	9/17/2024	REVISED PERMIT SET	DJB
5	6/27/2024	REVISED PERMIT SET	DJB
4	9/14/2023	DEP PERMIT SET	DJB
3	6/28/2023	75% DESIGN SUBMISSION	DJB
2	2/15/2023	30% DESIGN SUBMISSION	DJB
1	12/9/2022	15% DESIGN SUB REV	DJB
0	11/11/2022	15% DESIGN SUBMISSION	DJB

SHEET NAME

PIER PLANS AND ELEVATIONS

SHEET NO.

S-002

DJCASTELNUOVO, VINNIE \\gisconsultants.com\data\Data_Storage\Working\UNIVERSITY OF NEW ENGLAND\2203703 UNE Marine Science Center Pier\00_CAD\Design\Sheets\2203703-S-002.dwg - 6/6/2025

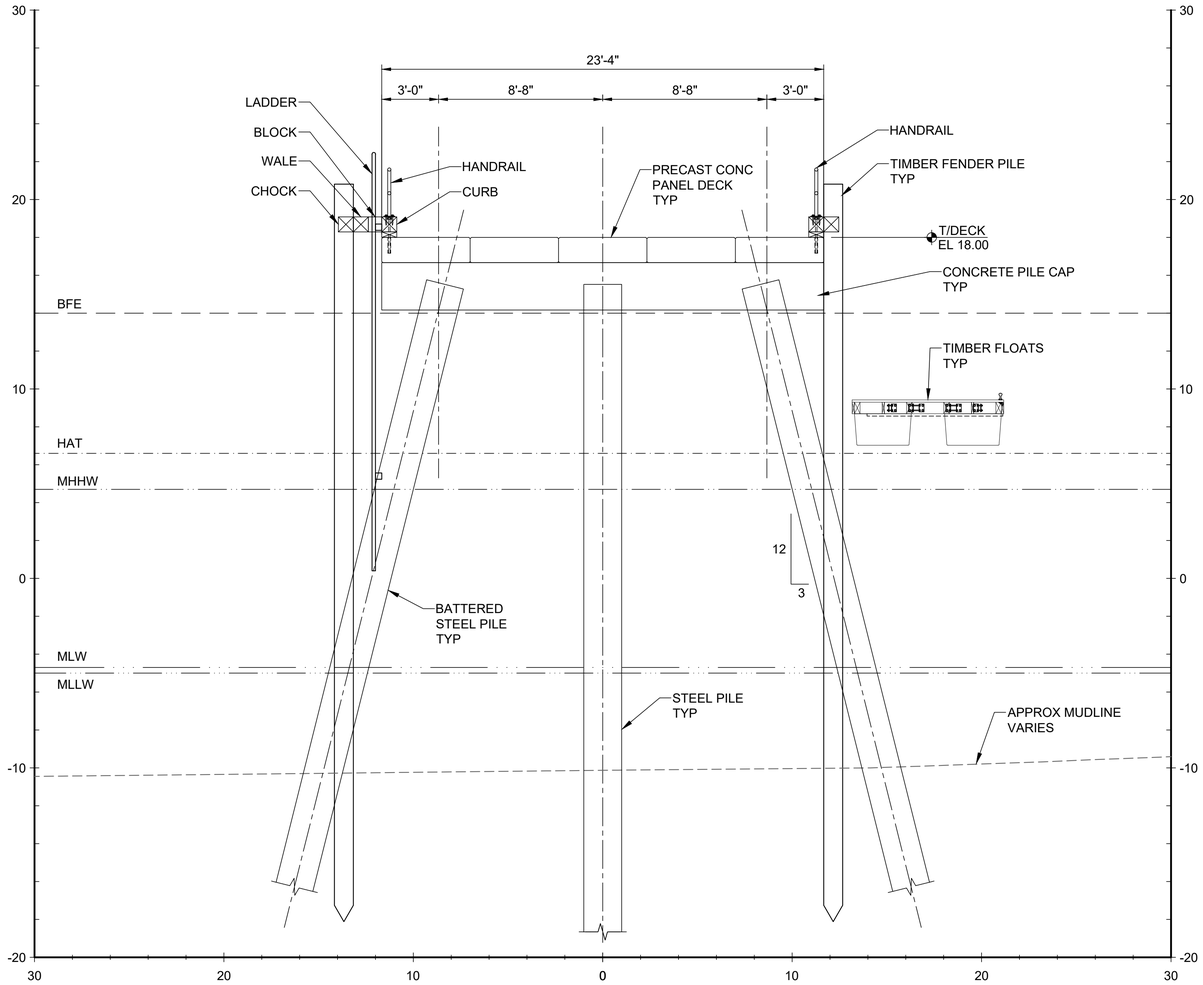

SECTION
MAIN PIER AT BENT 10 SCALE: 1"=4'

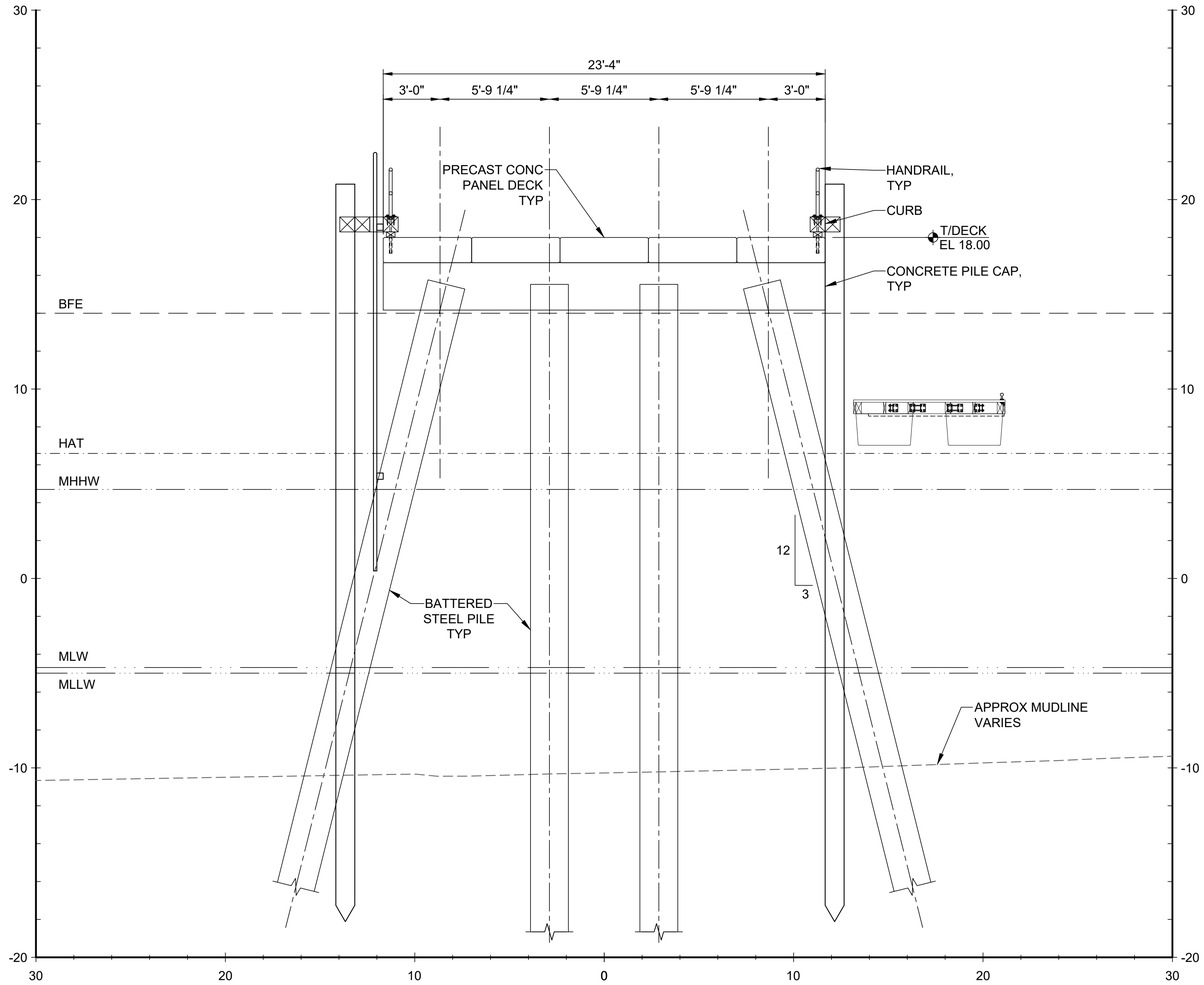

SECTION
MAIN PIER AT BENT 9 SCALE: 1"=4'

0 2 4 8
SCALE, FEET

ELEVATION	MLLW	NAVD88*
BFE	+19.0	+14.0
HAT	+11.6	+6.6
MHHW	+9.7	+4.7
MHW	+9.3	+4.3
MSL	+4.8	-0.2
MLW	+0.3	-4.7
MLLW	0.0	-5.0

*PROJECT DATUM

FOR PERMIT

Attention:
0 1"
If this scale bar does not measure 1" then drawing is not original scale.

STATE OF MAINE
DANIEL J. BANNON
No. 13033
LICENSED PROFESSIONAL ENGINEER
06/10/2025

Designed:	DJB
Drawn:	JAM
Checked:	BJB
Approved:	BMM
P.E. No:	13033
GEI Project	2203703

GEI Consultants
GEI CONSULTANTS, INC.
5 MILK STREET
PORTLAND, ME 04101
(207)797-8901

UNE
UNIVERSITY OF NEW ENGLAND
11 HILLS BEACH RD.
BIDDEFORD, MAINE

UNIVERSITY OF NEW ENGLAND MARINE SCIENCE CENTER PIER

11 HILLS BEACH ROAD
BIDDEFORD, YORK COUNTY, MAINE

NO	DATE	ISSUE/REVISION	APP
8	6/5/2025	ADDRESS PB COMMENTS	DJB
7	4/16/2025	BIDDEFORD PERMIT APP.	DJB
6	9/17/2024	REVISED PERMIT SET	DJB
5	6/27/2024	REVISED PERMIT SET	DJB
4	9/14/2023	DEP PERMIT SET	DJB
3	6/28/2023	75% DESIGN SUBMISSION	DJB
2	2/15/2023	30% DESIGN SUBMISSION	DJB
1	12/9/2022	15% DESIGN SUB REV	DJB
0	11/11/2022	15% DESIGN SUBMISSION	DJB

SHEET NAME
TYPICAL PIER SECTIONS (1 OF 2)

SHEET NO.
S-003

DJCASTELNUOVO, VINNIE \\geiconsultants.com\data\Data_Storage\Working\UNIVERSITY OF NEW ENGLAND\2203703 UNE Marine Science Center Pier\00_CAD\Design\Sheets\2203703-S-003.dwg - 6/6/2025

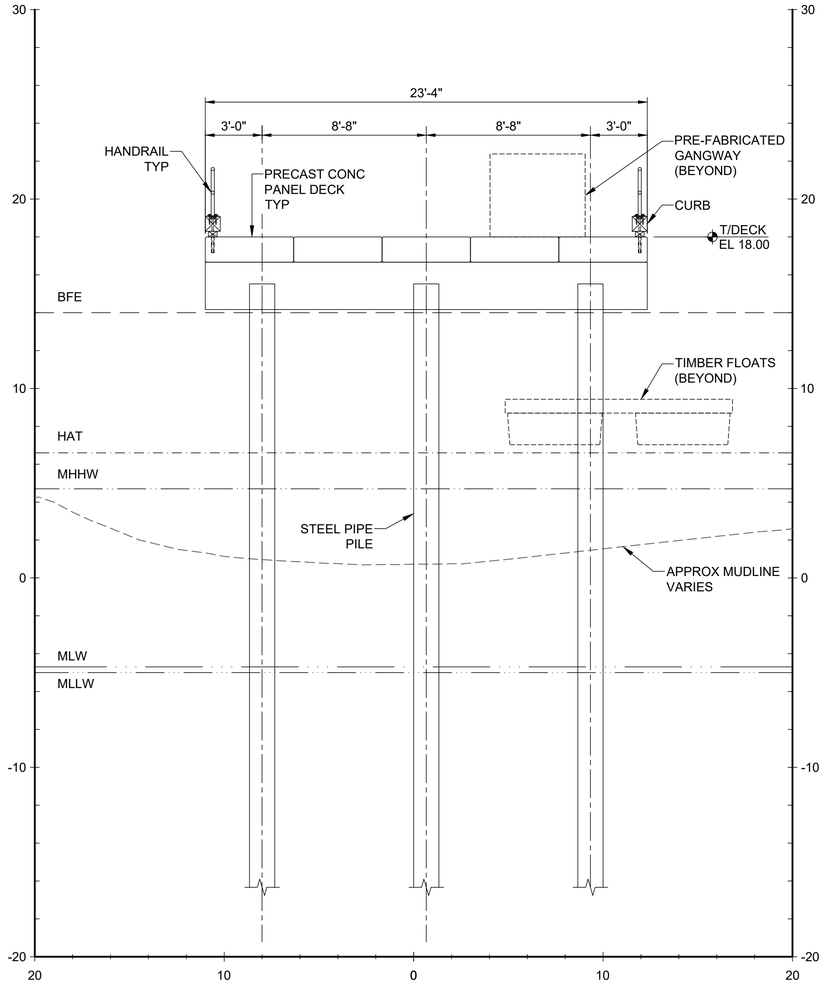

SECTION
28' WIDE APPROACH PIER AT BENT 2 SCALE: 1"=4'

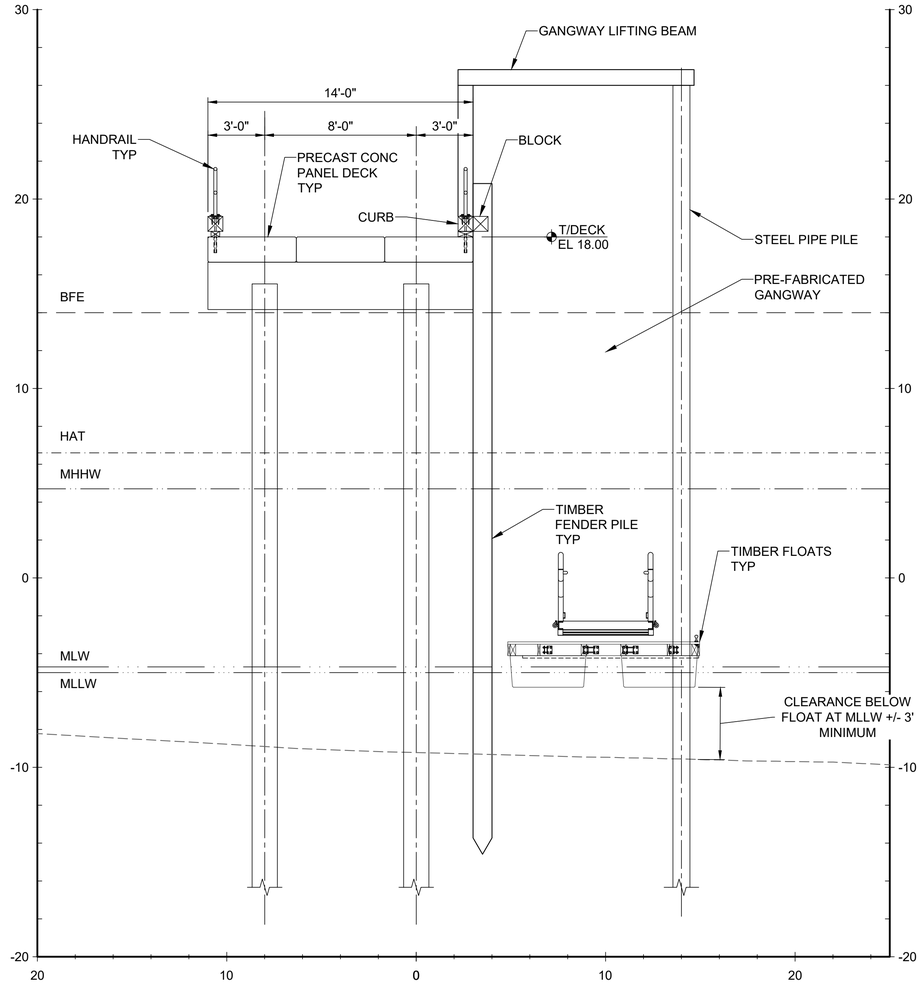

SECTION
14' WIDE APPROACH PIER AT GANGWAY HOIST SCALE: 1"=4'

0 2 4 8
SCALE, FEET

ELEVATION	MLLW	NAVD88*
BFE	+19.0	+14.0
HAT	+11.6	+6.6
MHHW	+9.7	+4.7
MHW	+9.3	+4.3
MSL	+4.8	-0.2
MLW	+0.3	-4.7
MLLW	0.0	-5.0

*PROJECT DATUM

FOR PERMIT

Attention:
0 1"
If this scale bar does not measure 1" then drawing is not original scale.

STATE OF MAINE
DANIEL J. BANNON
No. 13033
LICENSED PROFESSIONAL ENGINEER
06/10/2025

Designed:	DJB
Drawn:	JAM
Checked:	BJB
Approved:	BMM
P.E. No:	13033
GEI Project	2203703

GEI Consultants
GEI CONSULTANTS, INC.
5 MILK STREET
PORTLAND, ME 04101
(207)797-8901

UNIVERSITY OF NEW ENGLAND
11 HILLS BEACH RD.
BIDDEFORD, MAINE

UNIVERSITY OF NEW ENGLAND MARINE SCIENCE CENTER PIER
11 HILLS BEACH ROAD
BIDDEFORD, YORK COUNTY, MAINE

NO	DATE	ISSUE/REVISION	APP
8	6/5/2025	ADDRESS PB COMMENTS	DJB
7	4/16/2025	BIDDEFORD PERMIT APP.	DJB
6	9/17/2024	REVISED PERMIT SET	DJB
5	6/27/2024	REVISED PERMIT SET	DJB
4	9/14/2023	DEP PERMIT SET	DJB
3	6/28/2023	75% DESIGN SUBMISSION	DJB
2	2/15/2023	30% DESIGN SUBMISSION	DJB
1	12/9/2022	15% DESIGN SUB REV	DJB
0	11/11/2022	15% DESIGN SUBMISSION	DJB

SHEET NAME
TYPICAL PIER SECTIONS (2 OF 2)

SHEET NO.
S-004

DJCASTELNUOVO, VINNIE \\geiconsultants.com\data\Data_Storage\Working\UNIVERSITY OF NEW ENGLAND\2203703 UNE Marine Science Center Pier\00_CAD\Design\Sheets\2203703-S-004.dwg - 6/6/2025

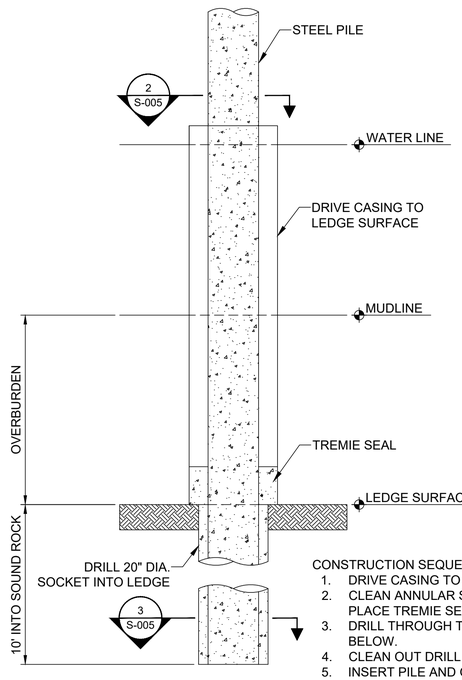

CONSTRUCTION SEQUENCE

1. DRIVE CASING TO LEDGE SURFACE.
2. CLEAN ANNULAR SPACE TO LEDGE SURFACE, PLACE TREMIE SEAL.
3. DRILL THROUGH TREMIE INTO SOUND ROCK BELOW.
4. CLEAN OUT DRILL HOLE.
5. INSERT PILE AND GROUT TO SURFACE.
6. REMOVE CASING.
7. FILL STEEL PIPE PILE TO TOP WITH CONCRETE.

1 DETAIL
PILE SOCKET SCALE: 1" = 2'

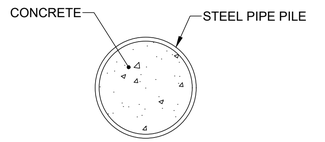

2 SECTION
CONCRETE FILLED STEEL PIPE PILE SCALE: 1" = 1'

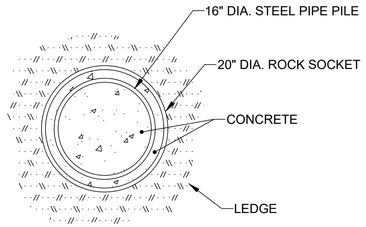

3 SECTION
ROCK SOCKET SCALE: 1" = 1'

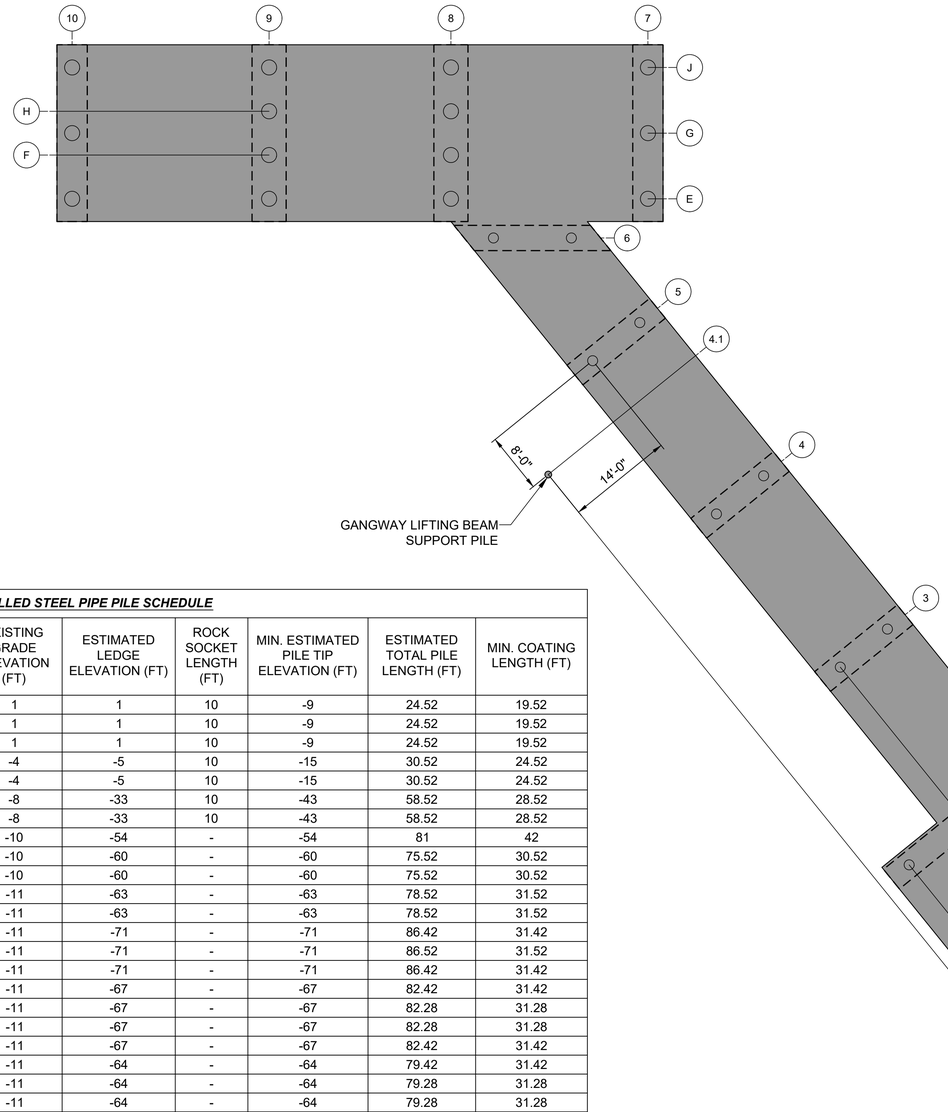

DETAIL
MAIN PIER SCALE: 1" = 10"

CONCRETE FILLED STEEL PIPE PILE SCHEDULE

PILE DESIGNATION	PILE SIZE (INCHES)	BATTER	CUTOFF ELEVATION (FT)	EXISTING GRADE ELEVATION (FT)	ESTIMATED LEDGE ELEVATION (FT)	ROCK SOCKET LENGTH (FT)	MIN. ESTIMATED PILE TIP ELEVATION (FT)	ESTIMATED TOTAL PILE LENGTH (FT)	MIN. COATING LENGTH (FT)
2A	16x5/8	VERTICAL	15.52	1	1	10	-9	24.52	19.52
2B	16x5/8	VERTICAL	15.52	1	1	10	-9	24.52	19.52
2D	16x5/8	VERTICAL	15.52	1	1	10	-9	24.52	19.52
3C	16x5/8	VERTICAL	15.52	-4	-5	10	-15	30.52	24.52
3D	16x5/8	VERTICAL	15.52	-4	-5	10	-15	30.52	24.52
4C	16x5/8	VERTICAL	15.52	-8	-33	10	-43	58.52	28.52
4D	16x5/8	VERTICAL	15.52	-8	-33	10	-43	58.52	28.52
4.1-A.1	10.75x5/8	VERTICAL	27	-10	-54	-	-54	81	42
5C	16x5/8	VERTICAL	15.52	-10	-60	-	-60	75.52	30.52
5D	16x5/8	VERTICAL	15.52	-10	-60	-	-60	75.52	30.52
6C	16x5/8	VERTICAL	15.52	-11	-63	-	-63	78.52	31.52
6D	16x5/8	VERTICAL	15.52	-11	-63	-	-63	78.52	31.52
7E	24x5/8	3:12	15.42	-11	-71	-	-71	86.42	31.42
7G	24x5/8	VERTICAL	15.52	-11	-71	-	-71	86.52	31.52
7J	24x5/8	3:12	15.42	-11	-71	-	-71	86.42	31.42
8E	24x5/8	3:12	15.42	-11	-67	-	-67	82.42	31.42
8F	24x5/8	3:12	15.28	-11	-67	-	-67	82.28	31.28
8H	24x5/8	3:12	15.28	-11	-67	-	-67	82.28	31.28
8J	24x5/8	3:12	15.42	-11	-67	-	-67	82.42	31.42
9E	24x5/8	3:12	15.42	-11	-64	-	-64	79.42	31.42
9F	24x5/8	3:12	15.28	-11	-64	-	-64	79.28	31.28
9H	24x5/8	3:12	15.28	-11	-64	-	-64	79.28	31.28
9J	24x5/8	3:12	15.42	-11	-64	-	-64	79.42	31.42
10E	24x5/8	3:12	15.42	-11	-66	-	-66	81.42	31.42
10G	24x5/8	VERTICAL	15.52	-11	-66	-	-66	81.52	31.52
10J	24x5/8	3:12	15.42	-11	-66	-	-66	81.42	31.42
							TOTAL	1821.5	

SCHEDULE NOTES

1. ALL ELEVATIONS REFERENCED IN TABLE ARE IN NAVD88 DATUM.

0 10 20
SCALE, FEET

0 1 2 4
SCALE, FEET

ELEVATION	MLLW	NAVD88*
BFE	+19.0	+14.0
HAT	+11.6	+6.6
MHHW	+9.7	+4.7
MHW	+9.3	+4.3
MSL	+4.8	-0.2
MLW	+0.3	-4.7
MLLW	0.0	-5.0

*PROJECT DATUM

FOR PERMIT

Attention:
0 1"
If this scale bar does not measure 1" then drawing is not original scale.

STATE OF MAINE
DANIEL J. BANNON
No. 13033
LICENSED PROFESSIONAL ENGINEER
06/10/2025

Designed:	DJB
Drawn:	JAM
Checked:	BJB
Approved:	BMM
P.E. No:	13033
GEI Project	2203703

GEI Consultants
GEI CONSULTANTS, INC.
5 MILK STREET
PORTLAND, ME 04101
(207)797-8901

UNIVERSITY OF NEW ENGLAND
11 HILLS BEACH RD.
BIDDEFORD, MAINE

UNIVERSITY OF NEW ENGLAND MARINE SCIENCE CENTER PIER

11 HILLS BEACH ROAD
BIDDEFORD, YORK COUNTY, MAINE

NO	DATE	ISSUE/REVISION	APP
8	6/5/2025	ADDRESS PB COMMENTS	DJB
7	4/16/2025	BIDDEFORD PERMIT APP.	DJB
6	9/17/2024	REVISED PERMIT SET	DJB
5	6/27/2024	REVISED PERMIT SET	DJB
4	9/14/2023	DEP PERMIT SET	DJB
3	6/28/2023	75% DESIGN SUBMISSION	DJB
2	2/15/2023	30% DESIGN SUBMISSION	DJB
1	12/9/2022	15% DESIGN SUB REV	DJB
0	11/11/2022	15% DESIGN SUBMISSION	DJB

SHEET NAME: **PILE PLAN**

SHEET NO.: **S-005**

DICASTELNUOVO, VINNIE \\geiconsultants.com\data\Data_Storage\Working\UNIVERSITY OF NEW ENGLAND\2203703 UNE Marine Science Center Pier\00_CAD\Design\Sheets\2203703-S-005.dwg - 6/6/2025

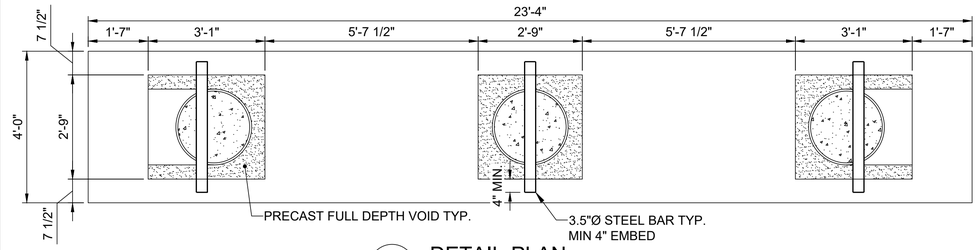

1 DETAIL-PLAN
MAIN PIER
BENT 7 & 10
SCALE: 1" = 2'

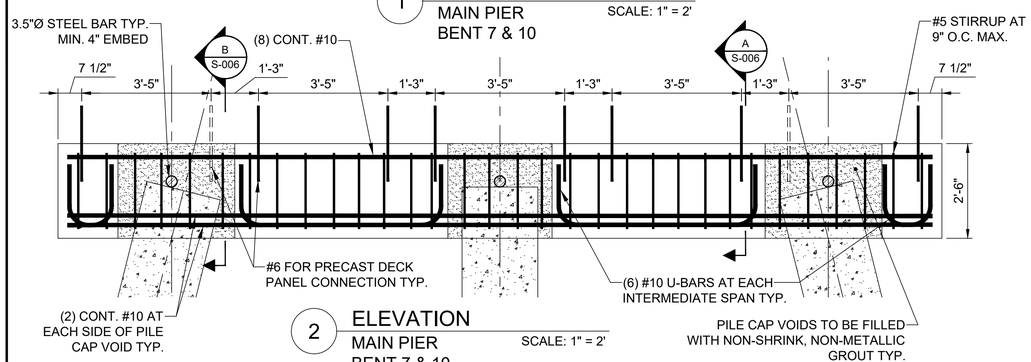

2 ELEVATION
MAIN PIER
BENT 7 & 10
SCALE: 1" = 2'

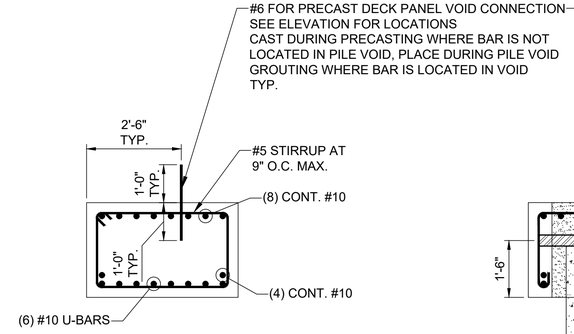

A SECTION
MAIN PIER
BENT 7 & 10
SCALE: 1" = 2'

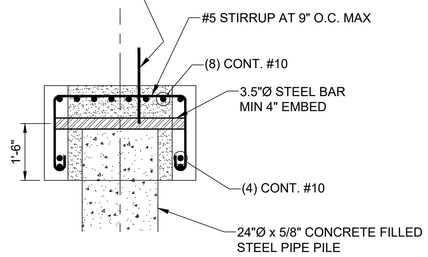

B SECTION
MAIN PIER
BENT 7 & 10
SCALE: 1" = 2'

5 DETAIL
MAIN PIER
N.T.S.

3 DETAIL-PLAN
MAIN PIER
BENT 8 & 9
SCALE: 1" = 2'

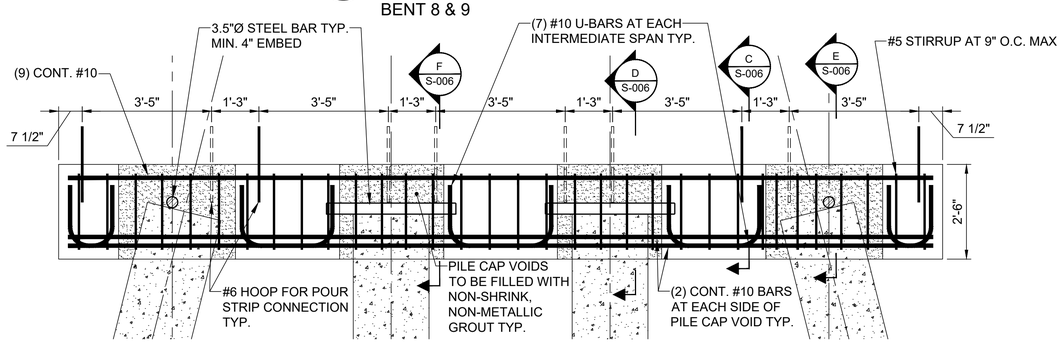

4 ELEVATION
MAIN PIER
BENT 8 & 9
SCALE: 1" = 2'

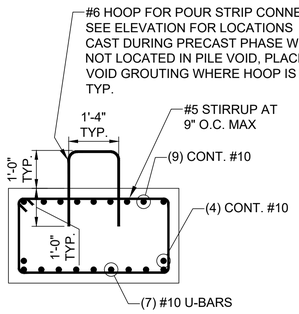

C SECTION
MAIN PIER
BENT 8 & 9
SCALE: 1" = 2'

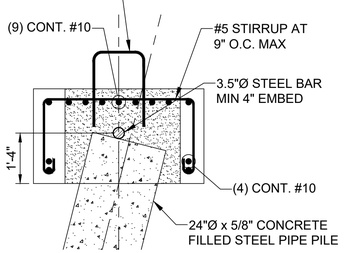

D SECTION
MAIN PIER
BENT 8 & 9
SCALE: 1" = 2'

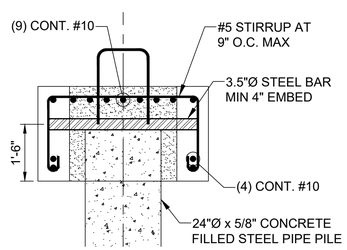

E SECTION
MAIN PIER
BENT 8 & 9
SCALE: 1" = 2'

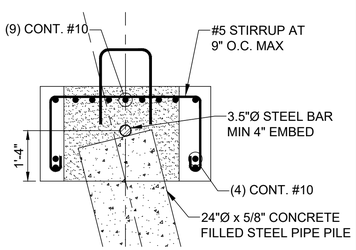

F SECTION
MAIN PIER
BENT 8 & 9
SCALE: 1" = 2'

FOR PERMIT

0 1 2 4
SCALE, FEET

ELEVATION	MLLW	NAVD88*
BFE	+19.0	+14.0
HAT	+11.6	+6.6
MHHW	+9.7	+4.7
MHW	+9.3	+4.3
MSL	+4.8	-0.2
MLW	+0.3	-4.7
MLLW	0.0	-5.0

*PROJECT DATUM

Attention:
0 1"
If this scale bar does not measure 1" then drawing is not original scale.

STATE OF MAINE
DANIEL J. BANNON
No. 13033
LICENSED PROFESSIONAL ENGINEER
06/10/2025

Designed:	DJB
Drawn:	JAM
Checked:	BJB
Approved:	BMM
P.E. No:	13033
GEI Project	2203703

GEI Consultants
GEI CONSULTANTS, INC.
5 MILK STREET
PORTLAND, ME 04101
(207)797-8901

UNE
UNIVERSITY OF NEW ENGLAND
11 HILLS BEACH RD.
BIDDEFORD, MAINE

UNIVERSITY OF NEW ENGLAND MARINE SCIENCE CENTER PIER
11 HILLS BEACH ROAD
BIDDEFORD, YORK COUNTY, MAINE

NO	DATE	ISSUE/REVISION	APP
8	6/5/2025	ADDRESS PB COMMENTS	DJB
7	4/16/2025	BIDDEFORD PERMIT APP.	DJB
6	9/17/2024	REVISED PERMIT SET	DJB
5	6/27/2024	REVISED PERMIT SET	DJB
4	9/14/2023	DEP PERMIT SET	DJB
3	6/28/2023	75% DESIGN SUBMISSION	DJB
2	2/15/2023	30% DESIGN SUBMISSION	DJB
1	12/9/2022	15% DESIGN SUB REV	DJB
0	11/11/2022	15% DESIGN SUBMISSION	DJB

SHEET NAME
PRECAST PILE CAP PLAN AND SECTIONS 1 OF 2

SHEET NO.
S-006

DICASTELNUOVO, VINNIE \\geiconsultants.com\data\Data_Storage\Working\UNIVERSITY OF NEW ENGLAND\2203703 UNE Marine Science Center Pier\00_CAD\Design\Sheets\2203703-S-006.dwg - 6/6/2025

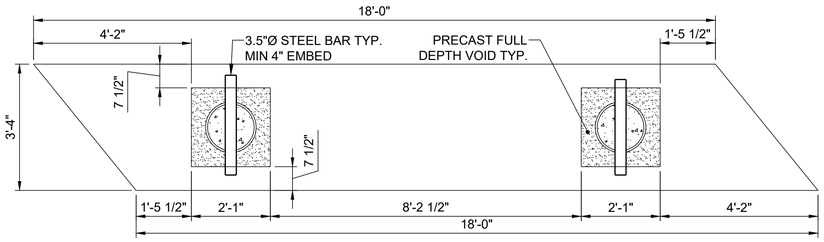

1 DETAIL-PLAN
APPROACH PIER BENT 6 — SCALE: 1" = 2'

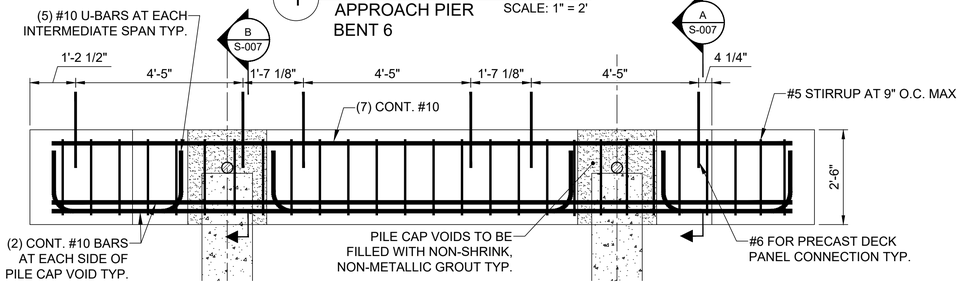

2 ELEVATION
APPROACH PIER BENT 6 — SCALE: 1" = 2'

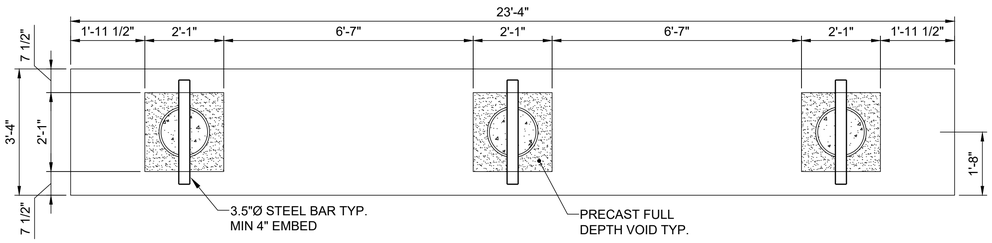

3 DETAIL-PLAN
APPROACH PIER BENT 2 — SCALE: 1" = 2'

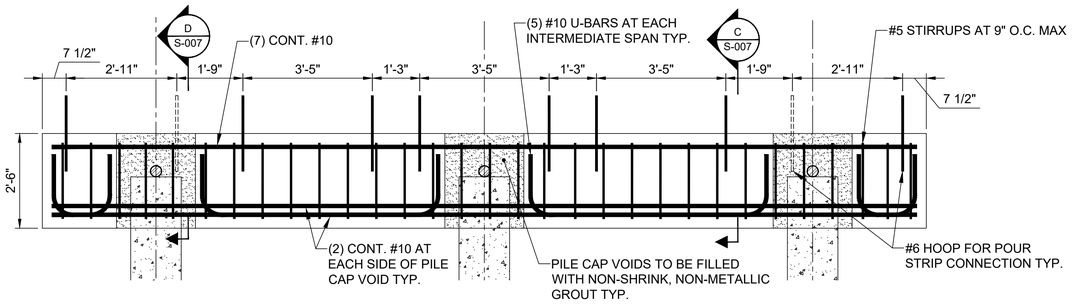

4 ELEVATION
APPROACH PIER BENT 2 — SCALE: 1" = 2'

0 1 2 4
SCALE, FEET

ELEVATION	MLLW	NAVD88*
BFE	+19.0	+14.0
HAT	+11.6	+6.6
MHHW	+9.7	+4.7
MHW	+9.3	+4.3
MSL	+4.8	-0.2
MLW	+0.3	-4.7
MLLW	0.0	-5.0

*PROJECT DATUM

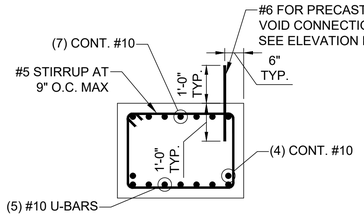

A SECTION
APPROACH PIER BENT 6 — SCALE: 1" = 2'

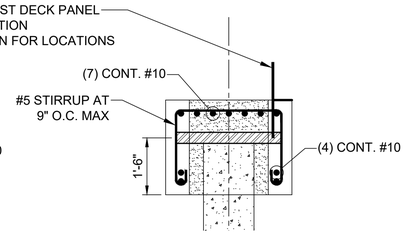

B SECTION
APPROACH PIER BENT 6 — SCALE: 1" = 2'

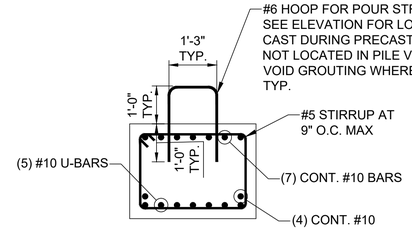

C SECTION
APPROACH PIER BENTS 2-5 — SCALE: 1" = 2'

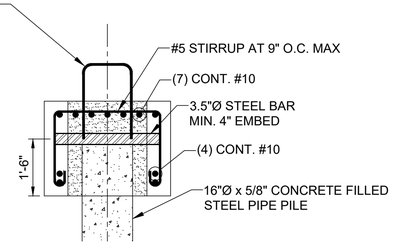

D SECTION
APPROACH PIER BENTS 2-5 — SCALE: 1" = 2'

7 DETAIL
MAIN PIER — N.T.S.

5 DETAIL-PLAN
APPROACH PIER BENTS 3-5 — SCALE: 1" = 2'

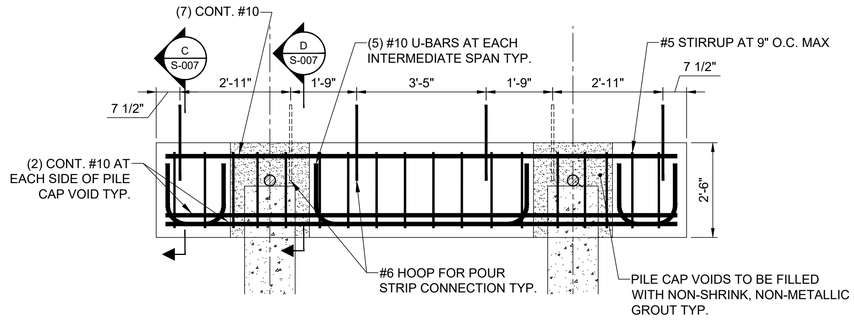

6 ELEVATION
APPROACH PIER BENTS 3-5 — SCALE: 1" = 2'

FOR PERMIT

Attention:
0 1"
If this scale bar does not measure 1" then drawing is not original scale.

STATE OF MAINE
DANIEL J. BANNON
No. 13033
LICENSED PROFESSIONAL ENGINEER
06/10/2025

Designed:	DJB
Drawn:	JAM
Checked:	BJB
Approved:	BMM
P.E. No:	13033
GEI Project	2203703

GEI Consultants
GEI CONSULTANTS, INC.
5 MILK STREET
PORTLAND, ME 04101
(207)797-8901

UNE
UNIVERSITY OF NEW ENGLAND
11 HILLS BEACH RD.
BIDDEFORD, MAINE

UNIVERSITY OF NEW ENGLAND MARINE SCIENCE CENTER PIER
11 HILLS BEACH ROAD
BIDDEFORD, YORK COUNTY, MAINE

NO	DATE	ISSUE/REVISION	
8	6/5/2025	ADDRESS PB COMMENTS	DJB
7	4/16/2025	BIDDEFORD PERMIT APP.	DJB
6	9/17/2024	REVISED PERMIT SET	DJB
5	6/27/2024	REVISED PERMIT SET	DJB
4	9/14/2023	DEP PERMIT SET	DJB
3	6/28/2023	75% DESIGN SUBMISSION	DJB
2	2/15/2023	30% DESIGN SUBMISSION	DJB
1	12/9/2022	15% DESIGN SUB REV	DJB
0	11/11/2022	15% DESIGN SUBMISSION	DJB

SHEET NAME
PRECAST PILE CAP PLAN AND SECTIONS 2 OF 2

SHEET NO.
S-007

DIGASTELNUOVO, VINNIE \\bos1v-fs02\Data_Storage\Working\UNIVERSITY OF NEW ENGLAND\2203703 UNE Marine Science Center Pier\00_CAD\Design\Sheets\2203703-S-007.dwg - 6/6/2025

PRECAST DECK PANEL SCHEDULE					
PANEL ID	A	B	C	D	QTY.
A	4'-8"	25'-2"	-	-	5
B	4'-8"	24'-3"	-	-	9
C	4'-8"	-	13'-3"	17'-0"	1
D	4'-8"	-	17'-0"	20'-9 1/2"	1
E	4'-8"	-	20'-9 1/2"	24'-7"	1
F	4'-8"	26'-0"	-	-	10
G	4'-8"	22'-0"	-	-	5

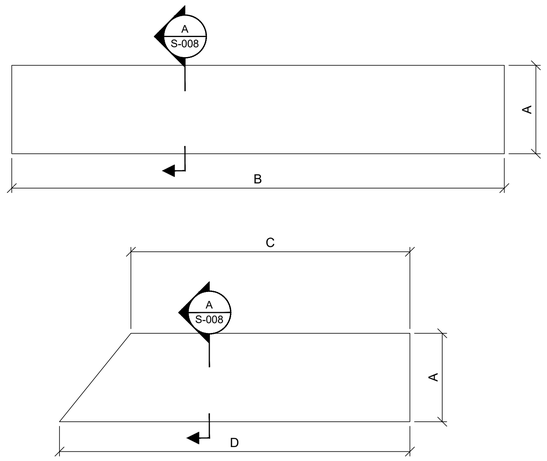

1 DETAIL-PLAN
PRECAST DECK PANEL SCALE: 1"=4'

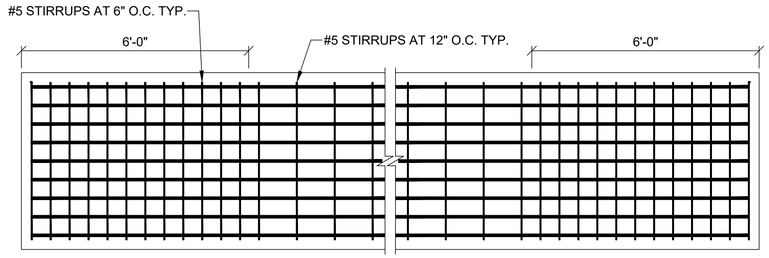

3 DETAIL-PLAN PLANKS A, B, F, & G
PRECAST DECK PANEL
STIRRUP SPACING SCALE: 1"=2'

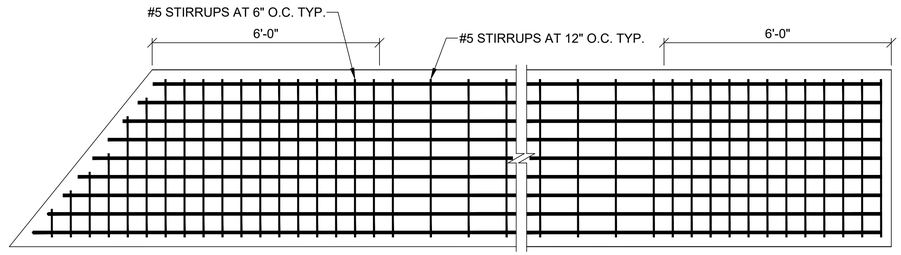

4 DETAIL-PLAN PLANKS C, D, & E
PRECAST DECK PANEL
STIRRUP SPACING SCALE: 1"=2'

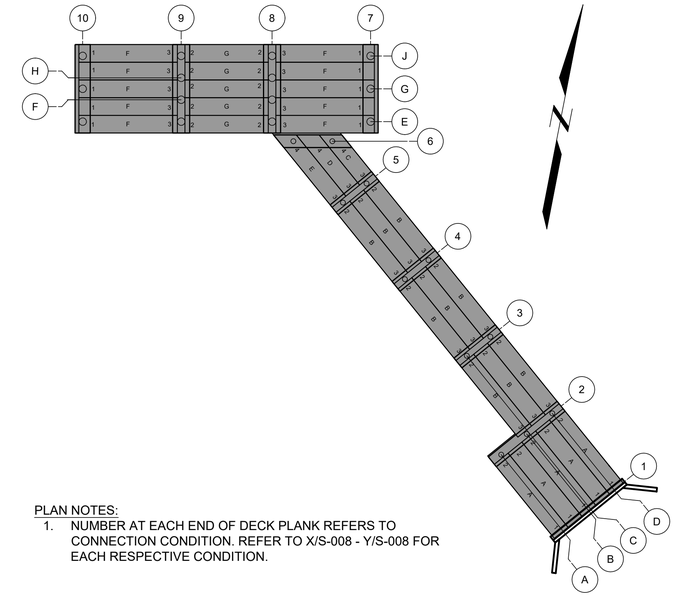

PLAN NOTES:
1. NUMBER AT EACH END OF DECK PLANK REFERS TO CONNECTION CONDITION. REFER TO X/S-008 - Y/S-008 FOR EACH RESPECTIVE CONDITION.

9 DETAIL
PIER DECK PANELS N.T.S.

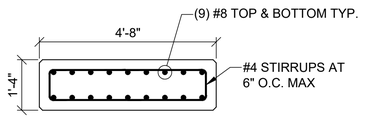

A SECTION
PRECAST DECK PANEL SCALE: 1"=2'

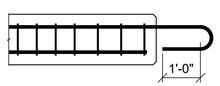

B SECTION
PRECAST DECK PANEL
CONNECTION END 2 & 3 SCALE: 1"=2'

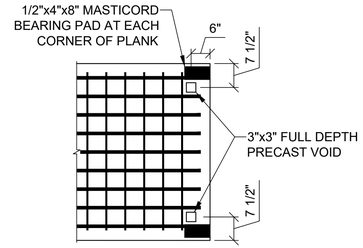

5 DETAIL - PLAN
DECK PANEL
CONNECTION 1 SCALE: 1"=2'

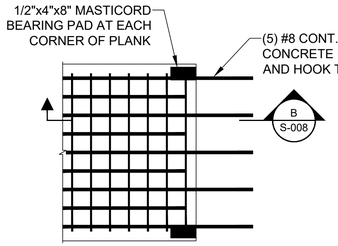

6 DETAIL - PLAN
DECK PANEL
CONNECTION 2 SCALE: 1"=2'

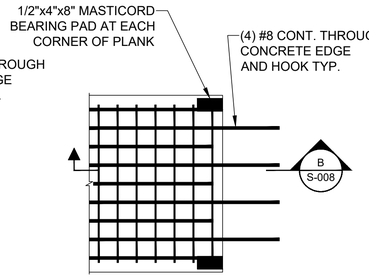

7 DETAIL - PLAN
DECK PANEL
CONNECTION 3 SCALE: 1"=2'

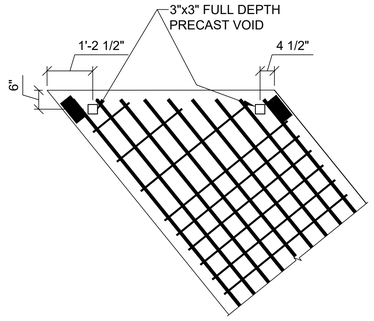

8 DETAIL - PLAN
DECK PANEL
CONNECTION 1 SCALE: 1"=2'

0 10 20
SCALE, FEET

0 1 2 4
SCALE, FEET

ELEVATION	MLLW	NAVD88*
BFE	+19.0	+14.0
HAT	+11.6	+6.6
MHHW	+9.7	+4.7
MHW	+9.3	+4.3
MSL	+4.8	-0.2
MLW	+0.3	-4.7
MLLW	0.0	-5.0

*PROJECT DATUM

FOR PERMIT

Attention:
0 1"
If this scale bar does not measure 1" then drawing is not original scale.

STATE OF MAINE
DANIEL J. BANNON
No. 13033
LICENSED PROFESSIONAL ENGINEER
06/10/2025

Designed:	DJB
Drawn:	JAM
Checked:	BJB
Approved:	BMM
P.E. No:	13033
GEI Project	2203703

GEI Consultants
GEI CONSULTANTS, INC.
5 MILK STREET
PORTLAND, ME 04101
(207)797-8901

UNIVERSITY OF NEW ENGLAND
11 HILLS BEACH RD.
BIDDEFORD, MAINE

UNIVERSITY OF NEW ENGLAND MARINE SCIENCE CENTER PIER
11 HILLS BEACH ROAD
BIDDEFORD, YORK COUNTY, MAINE

NO	DATE	ISSUE/REVISION	APP
8	6/5/2025	ADDRESS PB COMMENTS	DJB
7	4/16/2025	BIDDEFORD PERMIT APP.	DJB
6	9/17/2024	REVISED PERMIT SET	DJB
5	6/27/2024	REVISED PERMIT SET	DJB
4	9/14/2023	DEP PERMIT SET	DJB
3	6/28/2023	75% DESIGN SUBMISSION	DJB
2	2/15/2023	30% DESIGN SUBMISSION	DJB
1	12/9/2022	15% DESIGN SUB REV	DJB
0	11/11/2022	15% DESIGN SUBMISSION	DJB

SHEET NAME
PRECAST DECK PANEL PLAN

SHEET NO.
S-008

D:\CASTELNUOVO, VINNIE \\cos1v-fs02\Data_Storage\Working\UNIVERSITY OF NEW ENGLAND\2203703 UNE Marine Science Center Pier\00_CAD\Design\Sheets\2203703-S-008.dwg - 6/6/2025

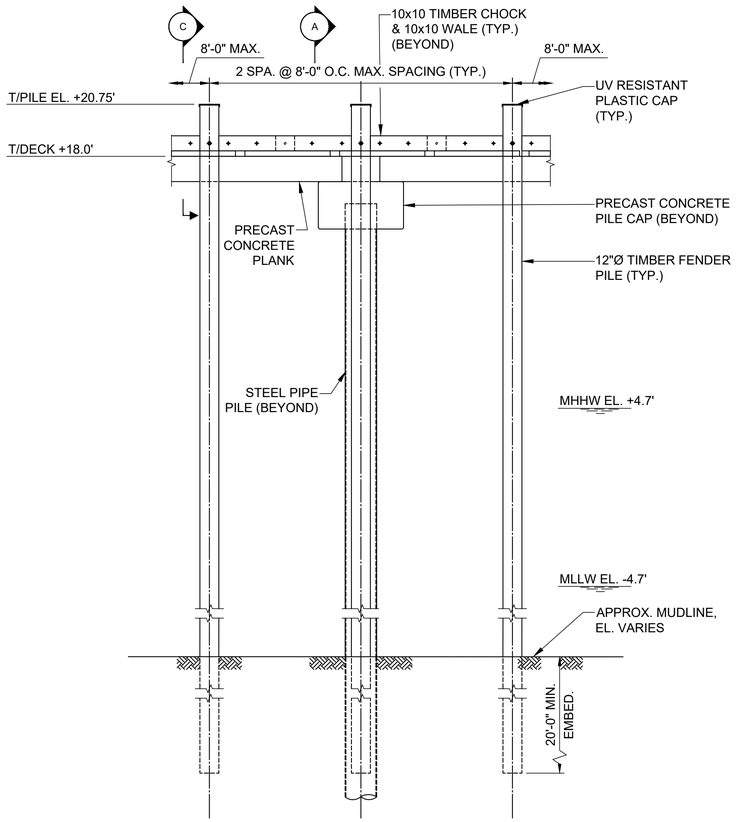

TIMBER FENDER DETAIL

SCALE: 1/4" = 1'-0"

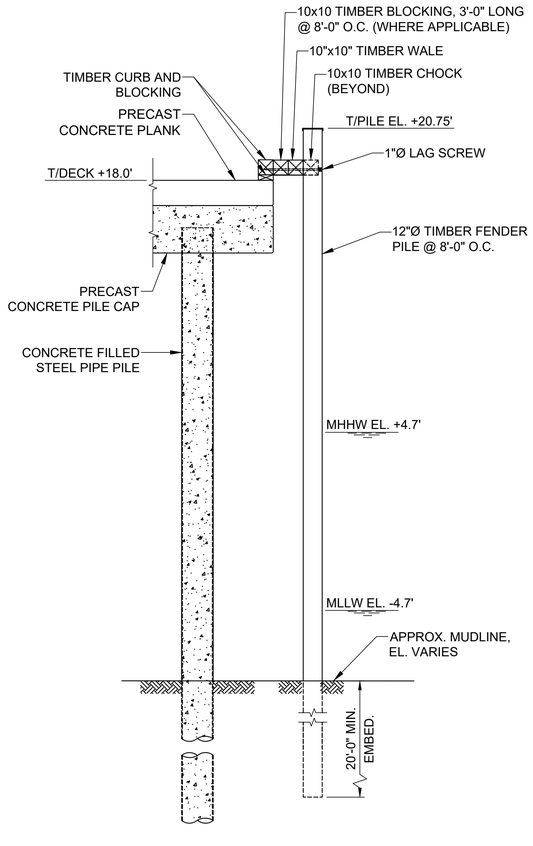

A TIMBER FENDER SECTION

SCALE: 1/4" = 1'-0"

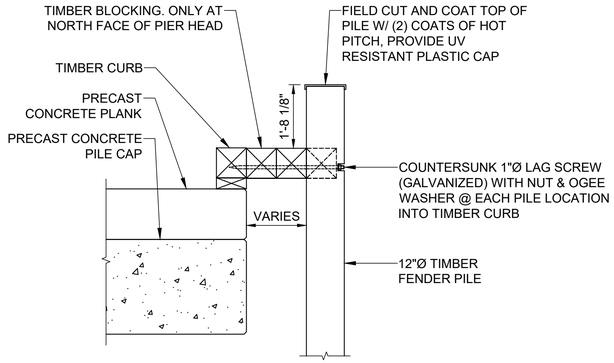

C FENDER PILE CONNECTION

SCALE: 1/2" = 1'-0"

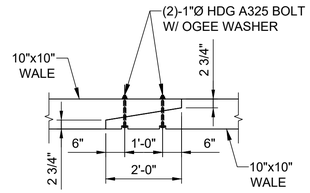

D WALE SPLICE DETAIL

SCALE: 1/2" = 1'-0"

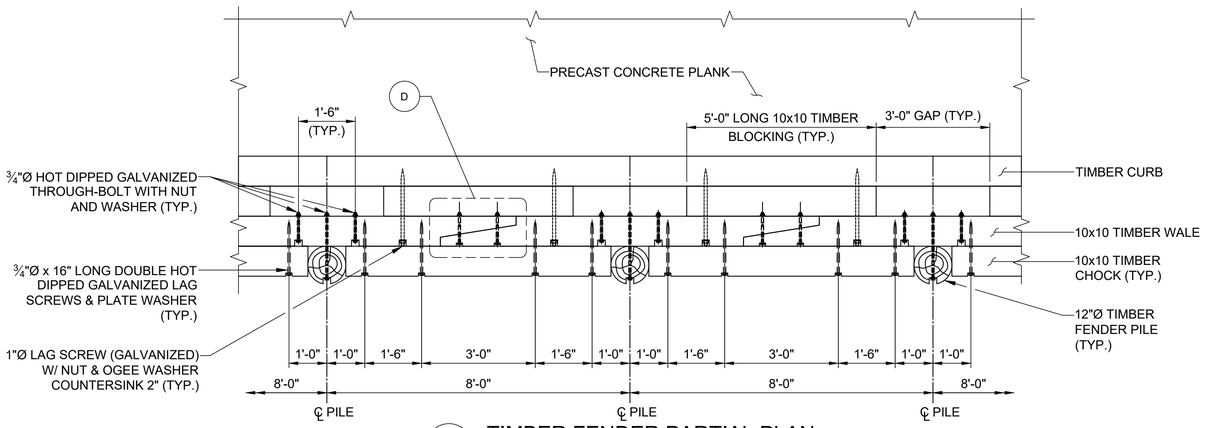

B TIMBER FENDER PARTIAL PLAN

SCALE: 1/2" = 1'-0"

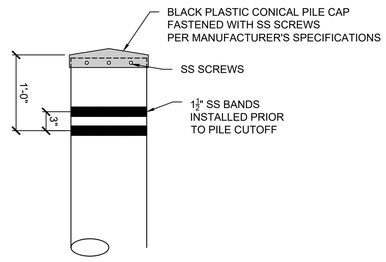

E PILE BANDING DETAIL

SCALE: 1" = 1'-0"

ELEVATION	MLLW	NAVD88*
BFE	+19.0	+14.0
HAT	+11.6	+6.6
MHHW	+9.7	+4.7
MHW	+9.3	+4.3
MSL	+4.8	-0.2
MLW	+0.3	-4.7
MLLW	0.0	-5.0

*PROJECT DATUM

FOR PERMIT

Attention:

0 1"

If this scale bar does not measure 1" then drawing is not original scale.

STATE OF MAINE DANIEL J. BANNON No. 13033 LICENSED PROFESSIONAL ENGINEER

06/10/2025

Designed:	DJB
Drawn:	JAM
Checked:	BJB
Approved:	BMM
P.E. No:	13033
GEI Project	2203703

GEI Consultants
GEI CONSULTANTS, INC.
5 MILK STREET
PORTLAND, ME 04101
(207)797-8901

UNE
UNIVERSITY OF NEW ENGLAND
11 HILLS BEACH RD.
BIDDEFORD, MAINE

UNIVERSITY OF NEW ENGLAND MARINE SCIENCE CENTER PIER
11 HILLS BEACH ROAD
BIDDEFORD, YORK COUNTY, MAINE

NO	DATE	ISSUE/REVISION	APP
8	6/5/2025	ADDRESS PB COMMENTS	DJB
7	4/16/2025	BIDDEFORD PERMIT APP.	DJB
6	9/17/2024	REVISED PERMIT SET	DJB
5	6/27/2024	REVISED PERMIT SET	DJB
4	9/14/2023	DEP PERMIT SET	DJB
3	6/28/2023	75% DESIGN SUBMISSION	DJB
2	2/15/2023	30% DESIGN SUBMISSION	DJB
1	12/9/2022	15% DESIGN SUB REV	DJB
0	11/11/2022	15% DESIGN SUBMISSION	DJB

SHEET NAME: **MISCELLANEOUS DETAILS (1 OF 5)**

SHEET NO.: **S-009**

DiCASTELNUOVO, VINNIE \\bost1v-fs02\Data_Storage\Working\UNIVERSITY OF NEW ENGLAND\2203703 UNE Marine Science Center Pier\00_CAD\Design\Sheets\2203703-S-009.dwg - 6/6/2025

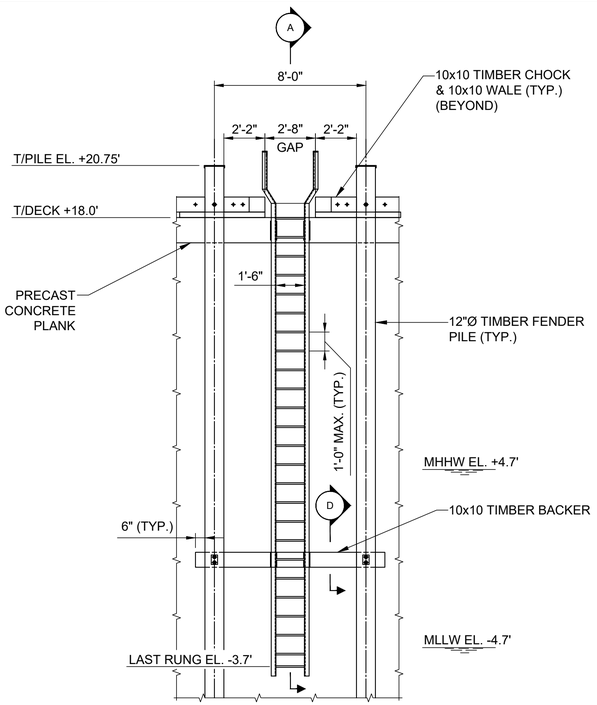

LADDER DETAIL

SCALE: 1/4" = 1'-0"

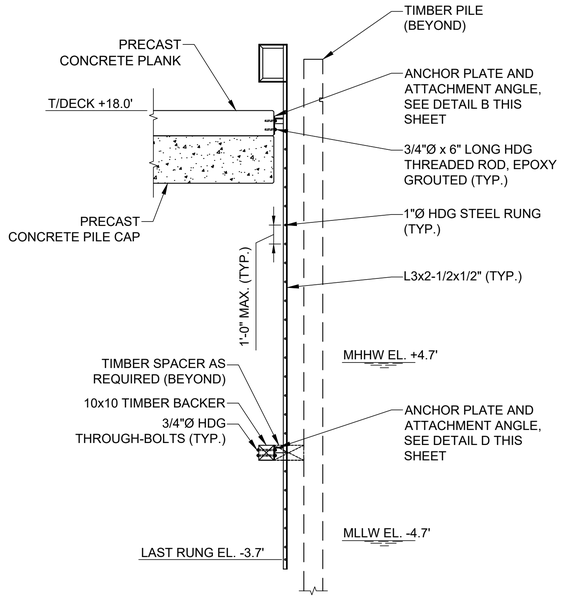

A LADDER SECTION

SCALE: 1/4" = 1'-0"

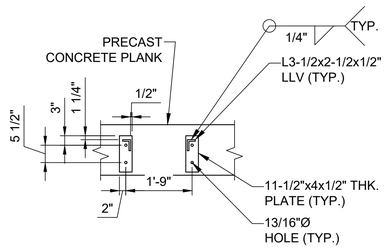

B LADDER CONNECTION (TOP)

SCALE: 1/2" = 1'-0"

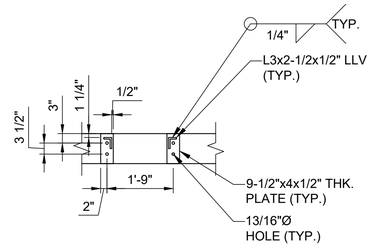

C LADDER CONNECTION (BOTTOM)

SCALE: 1/2" = 1'-0"

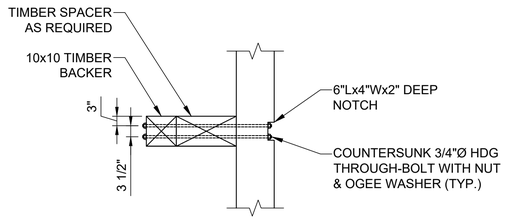

D TIMBER BACKER CONNECTION

SCALE: 1/2" = 1'-0"

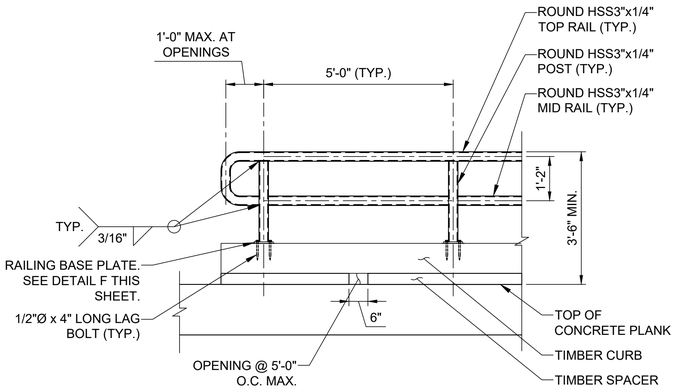

E RAILING SECTION

SCALE: 1/2" = 1'-0"

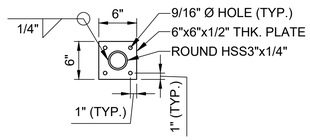

F RAILING BASEPLATE DETAIL

SCALE: 1" = 1'-0"

ELEVATION	MLLW	NAVD88*
BFE	+19.0	+14.0
HAT	+11.6	+6.6
MHHW	+9.7	+4.7
MHW	+9.3	+4.3
MSL	+4.8	-0.2
MLW	+0.3	-4.7
MLLW	0.0	-5.0

*PROJECT DATUM

FOR PERMIT

Attention:

0 1"

If this scale bar does not measure 1" then drawing is not original scale.

STATE OF MAINE
DANIEL J. BANNON
No. 13033
LICENSED PROFESSIONAL ENGINEER

06/10/2025

Designed:	DJB
Drawn:	JAM
Checked:	BJB
Approved:	BMM
P.E. No:	13033
GEI Project	2203703

GEI Consultants
GEI CONSULTANTS, INC.
5 MILK STREET
PORTLAND, ME 04101
(207)797-8901

UNE
UNIVERSITY OF NEW ENGLAND
11 HILLS BEACH RD.
BIDDEFORD, MAINE

UNIVERSITY OF NEW ENGLAND MARINE SCIENCE CENTER PIER
11 HILLS BEACH ROAD
BIDDEFORD, YORK COUNTY, MAINE

NO	DATE	ISSUE/REVISION	APP
8	6/5/2025	ADDRESS PB COMMENTS	DJB
7	4/16/2025	BIDDEFORD PERMIT APP.	DJB
6	9/17/2024	REVISED PERMIT SET	DJB
5	6/27/2024	REVISED PERMIT SET	DJB
4	9/14/2023	DEP PERMIT SET	DJB
3	6/28/2023	75% DESIGN SUBMISSION	DJB
2	2/15/2023	30% DESIGN SUBMISSION	DJB
1	12/9/2022	15% DESIGN SUB REV	DJB
0	11/11/2022	15% DESIGN SUBMISSION	DJB

SHEET NAME
MISCELLANEOUS DETAILS (2 OF 5)

SHEET NO.
S-010

DICASTELNUOVO, VINNIE \\bos1v-fs02\Data_Storage\Working\UNIVERSITY OF NEW ENGLAND\2203703.UNE Marine Science Center Pier\00_CAD\Design\Sheets\2203703-S-010.dwg - 6/6/2025

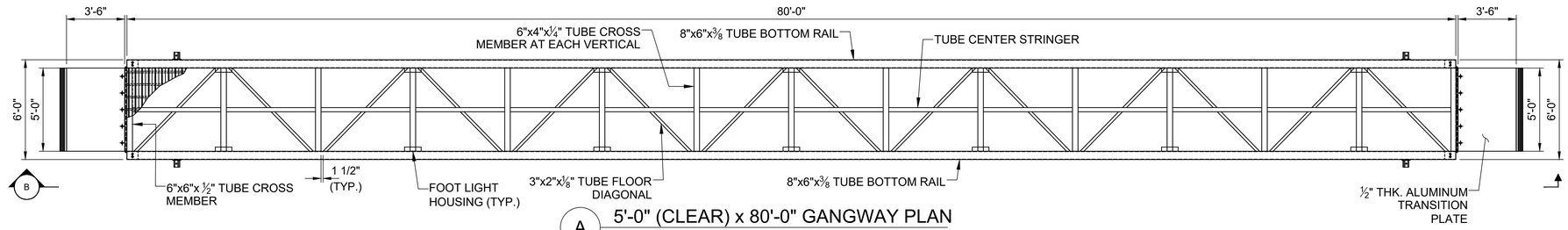

A 5'-0" (CLEAR) x 80'-0" GANGWAY PLAN

SCALE: 1/4" = 1'-0"

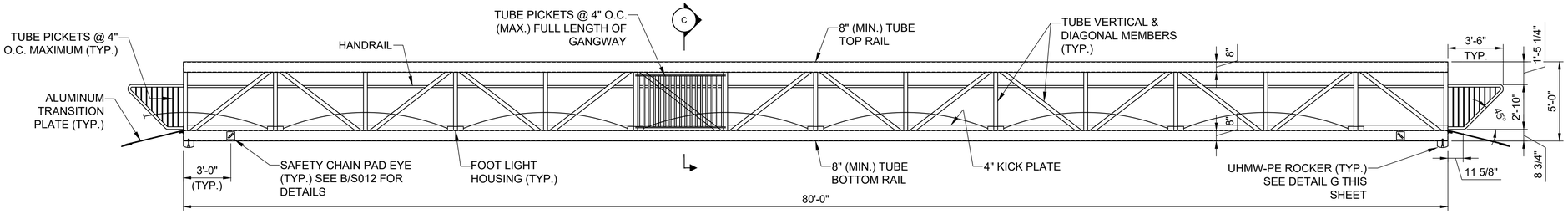

B GANGWAY ELEVATION

SCALE: 1/4" = 1'-0"

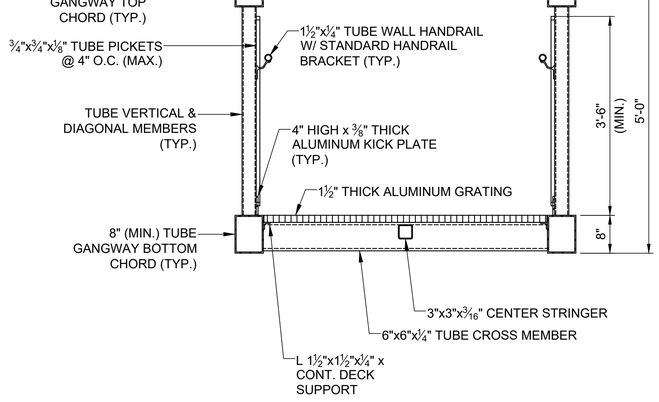

C TYPICAL GANGWAY SECTION

SCALE: 3/4" = 1'-0"

NOTE(S):
1. CONTRACTOR AND GANGWAY MANUFACTURER SHALL DETERMINE FINAL GANGWAY MEMBER SIZES AND SUBMIT TO ENGINEER FOR REVIEW AND APPROVAL.
2. ALUMINUM GRATING SHALL MEET ADA REQUIREMENTS.

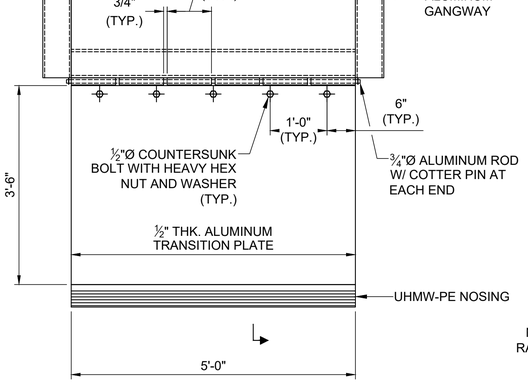

D TRANSITION PLATE DETAIL

SCALE: 3/4" = 1'-0"

NOTES:
1. CONTRACTOR SHALL DETERMINE FINAL GANGWAY MEMBER SIZES. MEMBERS ONLY SHOWN SCHEMATICALLY FOR REFERENCE.
2. CONTRACTOR SHALL SUBMIT FINAL GANGWAY SHOP DRAWINGS AND CALCULATION PACKAGE SIGNED AND SEALED BY A PROFESSIONAL ENGINEER LICENSED IN THE STATE OF MAINE.
3. ALL GANGWAY TUBE MEMBERS SHALL BE 6061-T6 ALUMINUM.
4. ALL GANGWAY TUBE MEMBERS SHALL BE CAPPED AND SEALED W/ ALUMINUM PLATES AT EXPOSED ENDS.

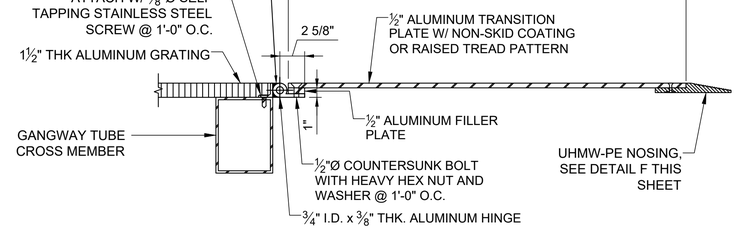

E GANGWAY TRANSITION PLATE SECTION

SCALE: 1-1/2" = 1'-0"

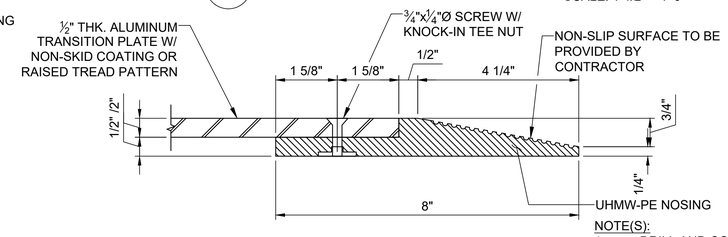

F UHMW-PE NOSING DETAIL

SCALE: 6" = 1'-0"

NOTE(S):
1. DRILL AND COUNTER BORE TRANSITION PLATES. COUNTERSINK HOLES FOR TEE NUTS TO TWICE BASE THICKNESS. SCREWS TO BE COUNTERSUNK INTO PLATE. INSTALL NEW SCREWS OVER SILICONE TO COVER EXPOSED ALUMINUM.
2. UHMW-PE NOSING DETAILS TO BE DETERMINED AFTER TRANSITION PLATE INSTALLATION AND SHALL BE IN COMPLIANCE WITH THE REQUIREMENTS SET FORTH IN ADA.

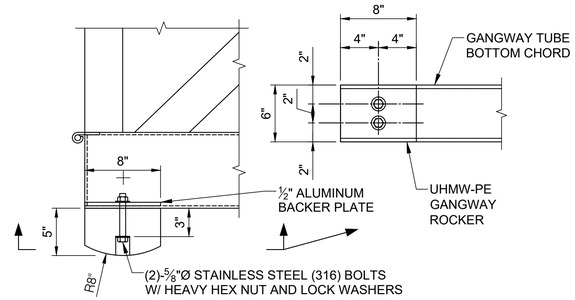

G GANGWAY ROCKER DETAIL

SCALE: 1-1/2" = 1'-0"

NOTES:
1. ROCKER MATERIAL SHALL BE VIRGIN UHMW-PE, BLACK IN COLOR.
2. ALUMINUM BACKER PLATE PLAN DIMENSIONS SHALL MATCH ROCKER PLAN DIMENSIONS.

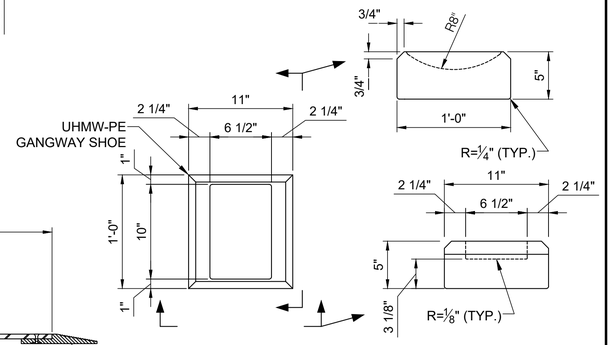

J GANGWAY SHOE DETAIL

SCALE: 1-1/2" = 1'-0"

NOTE: SHOE MATERIAL SHALL BE VIRGIN UHMW-PE, BLACK IN COLOR.

FOR PERMIT

ELEVATION	MLLW	NAVD88*
BFE	+19.0	+14.0
HAT	+11.6	+6.6
MHHW	+9.7	+4.7
MHW	+9.3	+4.3
MSL	+4.8	-0.2
MLW	+0.3	-4.7
MLLW	0.0	-5.0

*PROJECT DATUM

Attention:
0 1"
If this scale bar does not measure 1" then drawing is not original scale.

STATE OF MAINE — DANIEL J. BANNON No. 13033 — PROFESSIONAL ENGINEER — LICENSED
06/10/2025

Designed:	DJB
Drawn:	JAM
Checked:	BJB
Approved:	BMM
P.E. No:	13033
GEI Project	2203703

GEI Consultants
GEI CONSULTANTS, INC.
5 MILK STREET
PORTLAND, ME 04101
(207)797-8901

UNE
UNIVERSITY OF NEW ENGLAND
11 HILLS BEACH RD.
BIDDEFORD, MAINE

UNIVERSITY OF NEW ENGLAND MARINE SCIENCE CENTER PIER
11 HILLS BEACH ROAD
BIDDEFORD, YORK COUNTY, MAINE

NO	DATE	ISSUE/REVISION	APP
8	6/5/2025	ADDRESS PB COMMENTS	DJB
7	4/16/2025	BIDDEFORD PERMIT APP.	DJB
6	9/17/2024	REVISED PERMIT SET	DJB
5	6/27/2024	REVISED PERMIT SET	DJB
4	9/14/2023	DEP PERMIT SET	DJB
3	6/28/2023	75% DESIGN SUBMISSION	DJB
2	2/15/2023	30% DESIGN SUBMISSION	DJB
1	12/9/2022	15% DESIGN SUB REV	DJB
0	11/11/2022	15% DESIGN SUBMISSION	DJB

SHEET NAME: **MISCELLANEOUS DETAILS (3 OF 5)**

SHEET NO.: **S-011**

DICASTELNUOVO, VINNIE \\bos1v-fs02\Data_Storage\Working\UNIVERSITY OF NEW ENGLAND\2203703 UNE Marine Science Center Pier\00_CAD\Design\Sheets\2203703-S-011.dwg - 6/6/2025

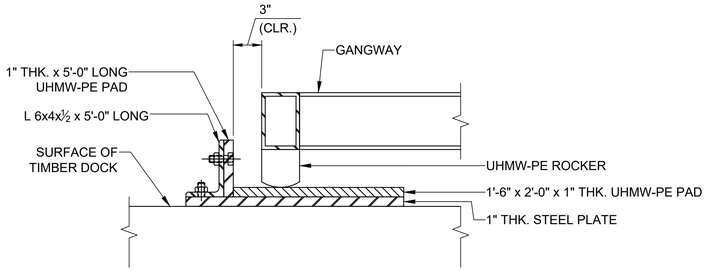

A GANGWAY LANDING AT DOCKS
SCALE: 1-1/2" = 1'-0"

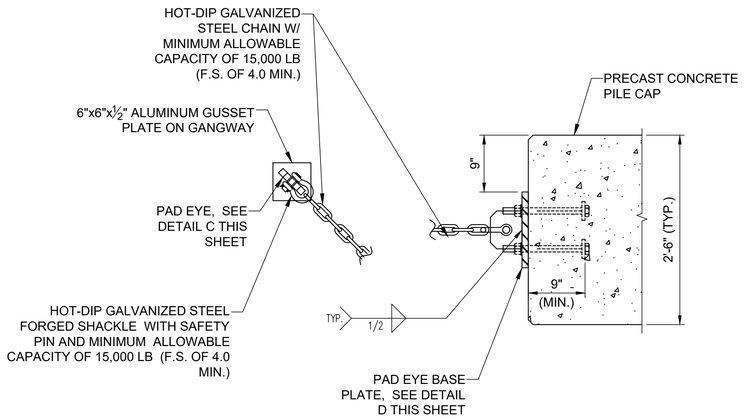

B SAFETY CHAIN ASSEMBLY
SCALE: 1" = 1'-0"

NOTE: CONTRACTOR TO DETERMINE ASSEMBLY LENGTH BASED ON PAD EYE LOCATION ON GANGWAY SUCH THAT UHMW-PE SHOE CANNOT MOVE OFF THE SUPPORTING PLATE.

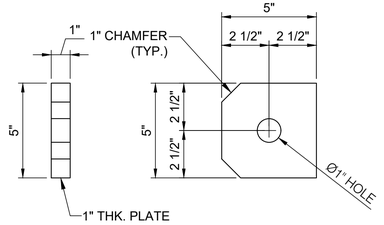

C PAD EYE DETAIL
SCALE: 3" = 1'-0"

NOTE: PAD EYE ON GANGWAY SHALL BE ALUMINUM.
PAD EYE ON PILE CAP SHALL BE HDG STEEL.

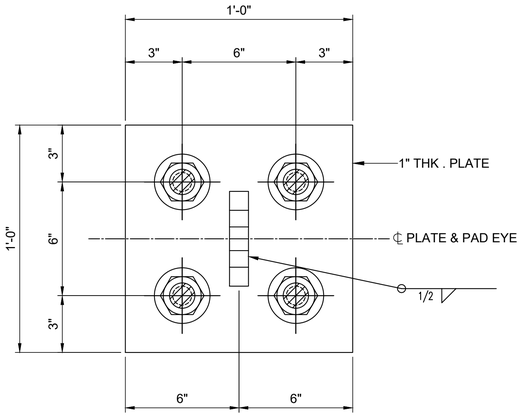

D PAD EYE BASE PLATE DETAIL
SCALE: 3" = 1'-0"

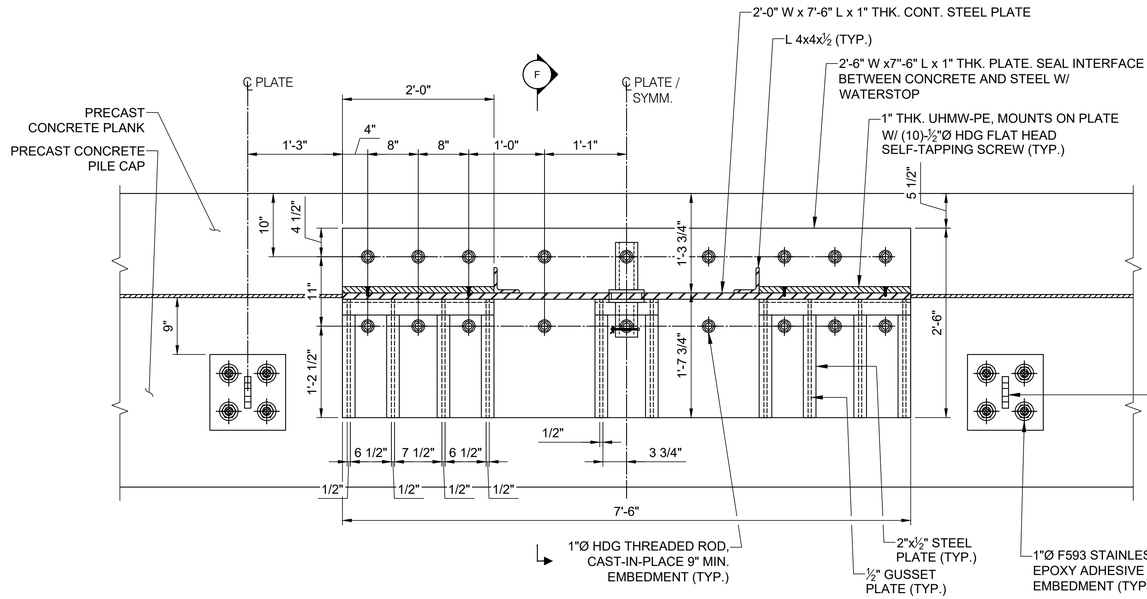

E FIFTH WHEEL ASSEMBLY - ELEVATION
SCALE: 1" = 1'-0"

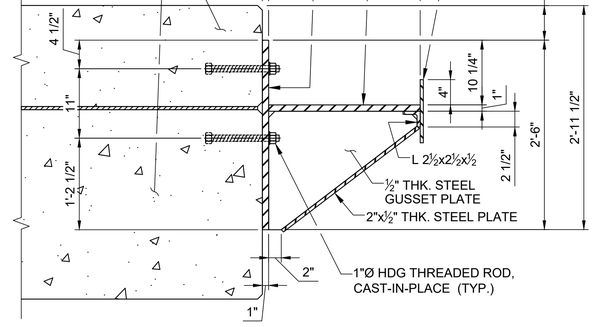

F FIFTH WHEEL ASSEMBLY - TYPICAL SECTION
SCALE: 1" = 1'-0"

ELEVATION	MLLW	NAVD88*
BFE	+19.0	+14.0
HAT	+11.6	+6.6
MHHW	+9.7	+4.7
MHW	+9.3	+4.3
MSL	+4.8	-0.2
MLW	+0.3	-4.7
MLLW	0.0	-5.0

*PROJECT DATUM

FOR PERMIT

Attention:
0 1"
If this scale bar does not measure 1" then drawing is not original scale.

STATE OF MAINE
DANIEL J. BANNON
No. 13033
LICENSED PROFESSIONAL ENGINEER
06/10/2025

Designed:	DJB
Drawn:	JAM
Checked:	BJB
Approved:	BMM
P.E. No:	13033
GEI Project	2203703

GEI Consultants
GEI CONSULTANTS, INC.
5 MILK STREET
PORTLAND, ME 04101
(207)797-8901

UNE
UNIVERSITY OF NEW ENGLAND
11 HILLS BEACH RD.
BIDDEFORD, MAINE

UNIVERSITY OF NEW ENGLAND MARINE SCIENCE CENTER PIER
11 HILLS BEACH ROAD
BIDDEFORD, YORK COUNTY, MAINE

NO	DATE	ISSUE/REVISION	APP
8	6/5/2025	ADDRESS PB COMMENTS	DJB
7	4/16/2025	BIDDEFORD PERMIT APP.	DJB
6	9/17/2024	REVISED PERMIT SET	DJB
5	6/27/2024	REVISED PERMIT SET	DJB
4	9/14/2023	DEP PERMIT SET	DJB
3	6/28/2023	75% DESIGN SUBMISSION	DJB
2	2/15/2023	30% DESIGN SUBMISSION	DJB
1	12/9/2022	15% DESIGN SUB REV	DJB
0	11/11/2022	15% DESIGN SUBMISSION	DJB

SHEET NAME
MISCELLANEOUS DETAILS (4 OF 5)

SHEET NO.
S-012

DICASTELNUOVO, VINNIE \\bos1v-fs02\Data_Storage\Working\UNIVERSITY OF NEW ENGLAND\2203703 UNE Marine Science Center Pier\00_CAD\Design\Sheets\2203703-S-012.dwg - 6/6/2025

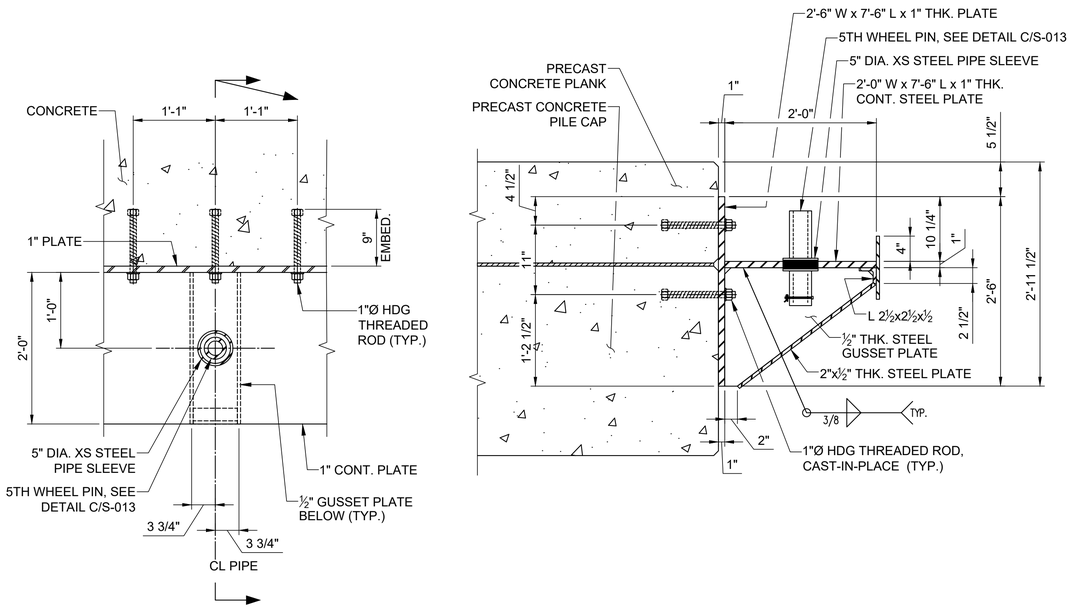

A TYPICAL 5TH WHEEL PLAN AND SECTION

SCALE: 1" = 1'-0"

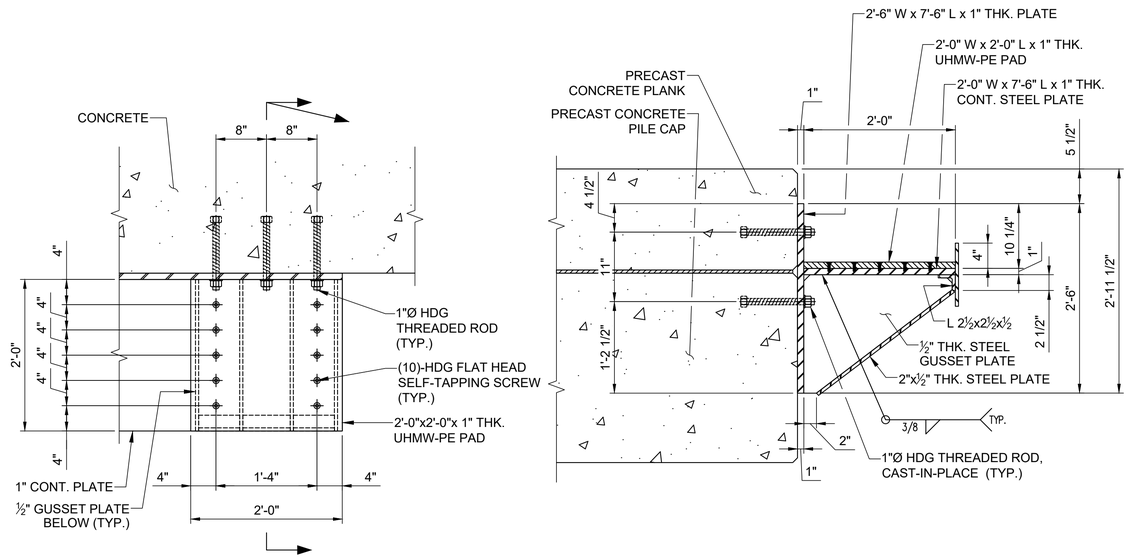

B TYPICAL UHMW-PE PAD DETAIL

SCALE: 1" = 1'-0"

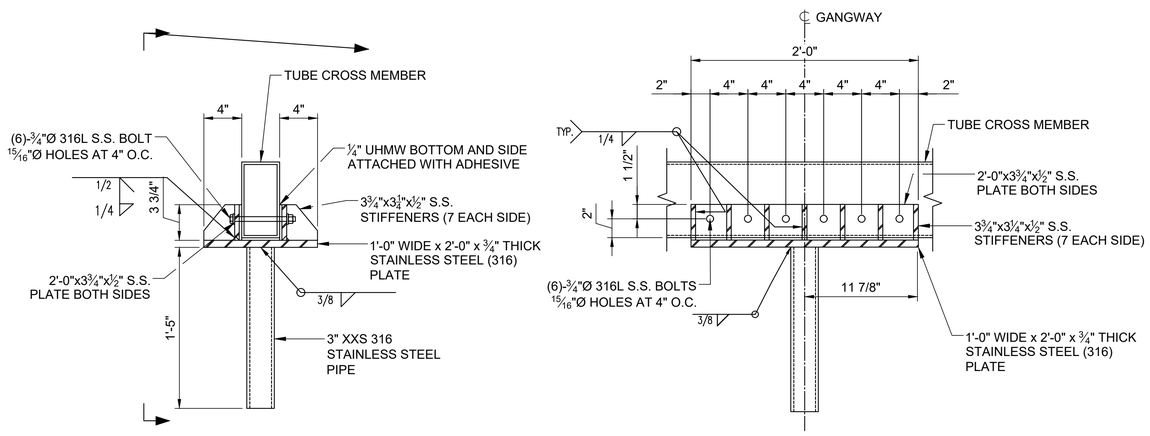

C 5TH WHEEL PIN DETAIL

SCALE: 1-1/2" = 1'-0"

ELEVATION	MLLW	NAVD88*
BFE	+19.0	+14.0
HAT	+11.6	+6.6
MHHW	+9.7	+4.7
MHW	+9.3	+4.3
MSL	+4.8	-0.2
MLW	+0.3	-4.7
MLLW	0.0	-5.0

*PROJECT DATUM

FOR PERMIT

Attention:

0 1"

If this scale bar does not measure 1" then drawing is not original scale.

STATE OF MAINE — DANIEL J. BANNON No. 13033 — LICENSED PROFESSIONAL ENGINEER

06/10/2025

Designed:	DJB
Drawn:	JAM
Checked:	BJB
Approved:	BMM
P.E. No:	13033
GEI Project	2203703

GEI Consultants

GEI CONSULTANTS, INC.
5 MILK STREET
PORTLAND, ME 04101
(207)797-8901

UNIVERSITY OF NEW ENGLAND

11 HILLS BEACH RD.
BIDDEFORD, MAINE

UNIVERSITY OF NEW ENGLAND MARINE SCIENCE CENTER PIER

11 HILLS BEACH ROAD
BIDDEFORD, YORK COUNTY, MAINE

NO	DATE	ISSUE/REVISION	APP
8	6/5/2025	ADDRESS PB COMMENTS	DJB
7	4/16/2025	BIDDEFORD PERMIT APP.	DJB
6	9/17/2024	REVISED PERMIT SET	DJB
5	6/27/2024	REVISED PERMIT SET	DJB
4	9/14/2023	DEP PERMIT SET	DJB
3	6/28/2023	75% DESIGN SUBMISSION	DJB
2	2/15/2023	30% DESIGN SUBMISSION	DJB
1	12/9/2022	15% DESIGN SUB REV	DJB
0	11/11/2022	15% DESIGN SUBMISSION	DJB

SHEET NAME

MISCELLANEOUS DETAILS (5 OF 5)

SHEET NO.

S-013

DICASTELNUOVO, VINNIE \\bos1v-fs02\Data_Storage\Working\UNIVERSITY OF NEW ENGLAND\2203703.UNE Marine Science Center Pier\00_CAD\Design\Sheets\2203703-S-013.dwg - 6/6/2025

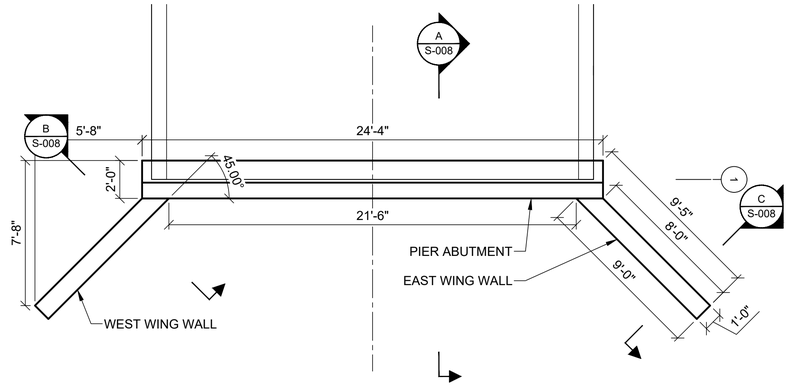

ABUTMENT PLAN
SCALE: SCALE: 3" = 1'-0"

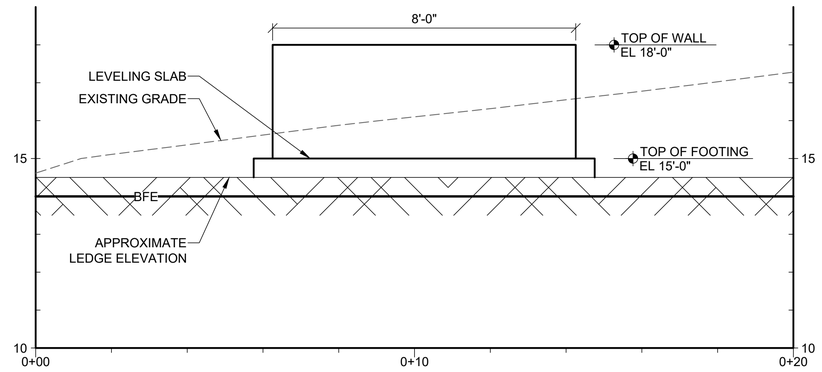

WEST WING WALL ELEVATION
SCALE: 6" = 1'-0"

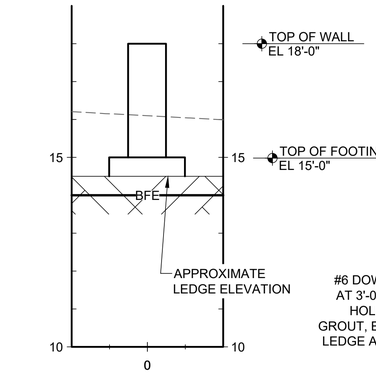

B WEST WING WALL SECTION
SCALE: 6" = 1'-0"

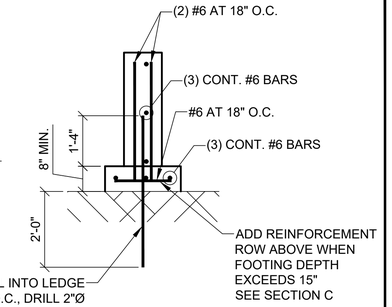

B SECTION
WEST WING WALL REINFORCEMENT
SCALE: 6" = 1'-0"

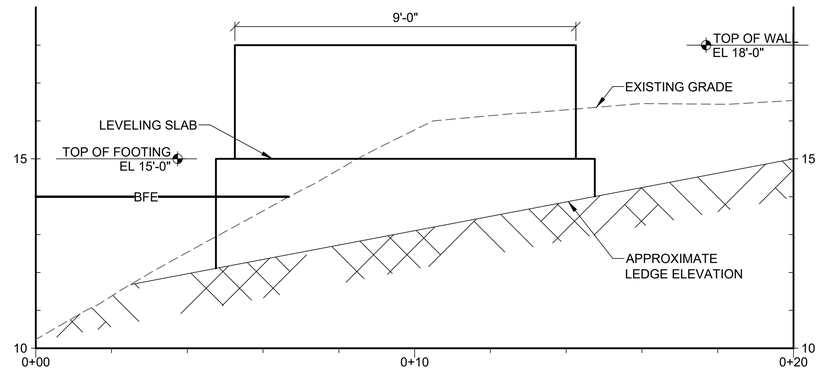

EAST WING WALL ELEVATION
SCALE: 6" = 1'-0"

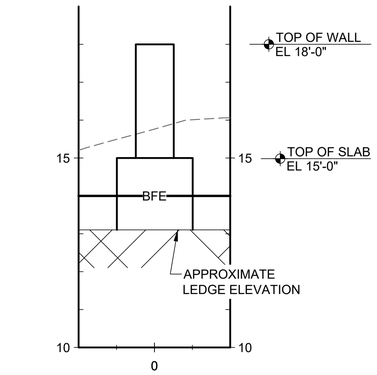

C EAST WING WALL SECTION
SCALE: 6" = 1'-0"

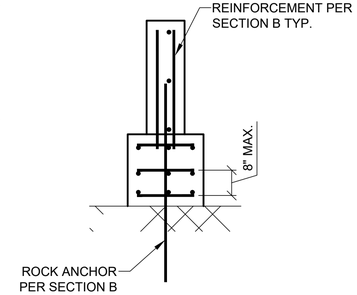

C SECTION
EAST WING WALL REINFORCEMENT
SCALE: 6" = 1'-0"

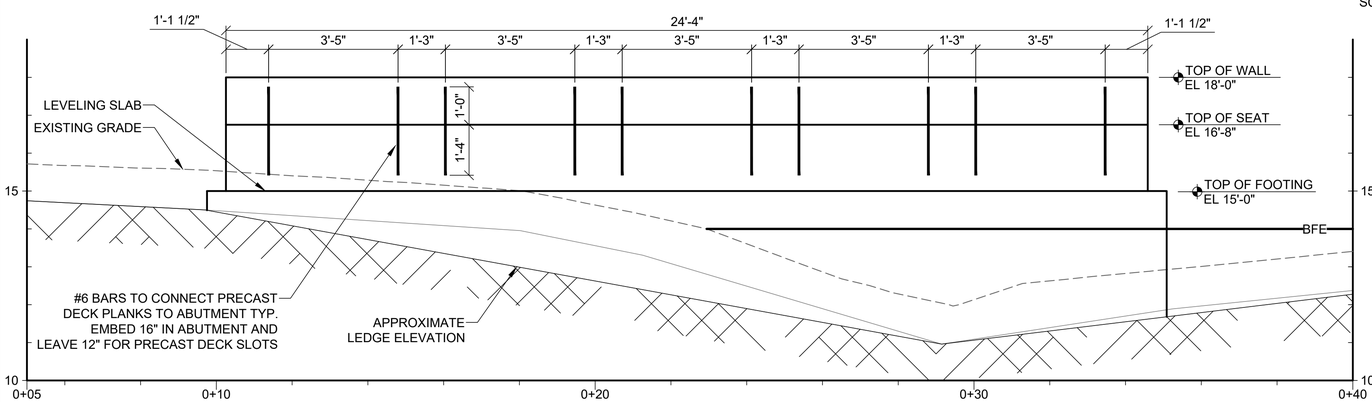

ABUTMENT ELEVATION A
SCALE: 3" = 1'-0"

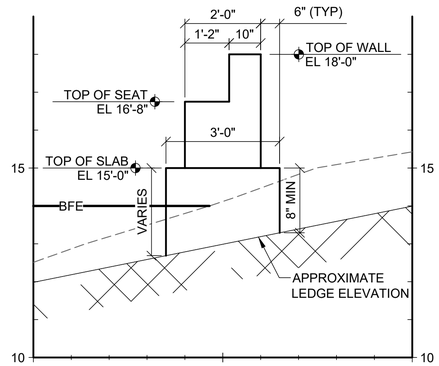

A ABUTMENT SECTION
SCALE: 6" = 1'-0"

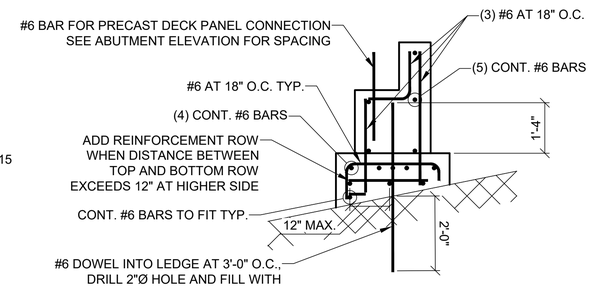

A SECTION
ABUTMENT REINFORCEMENT
SCALE: 6" = 1'-0"

FOR PERMIT

ELEVATION	MLLW	NAVD88*
BFE	+19.0	+14.0
HAT	+11.6	+6.6
MHHW	+9.7	+4.7
MHW	+9.3	+4.3
MSL	+4.8	-0.2
MLW	+0.3	-4.7
MLLW	0.0	-5.0

*PROJECT DATUM

Attention:
0 1"
If this scale bar does not measure 1" then drawing is not original scale.

STATE OF MAINE
DANIEL J. BANNON
No. 13033
LICENSED PROFESSIONAL ENGINEER
06/10/2025

Designed:	DJB
Drawn:	JAM
Checked:	BJB
Approved:	BMM
P.E. No:	13033
GEI Project	2203703

GEI Consultants
GEI CONSULTANTS, INC.
5 MILK STREET
PORTLAND, ME 04101
(207)797-8901

UNIVERSITY OF NEW ENGLAND
11 HILLS BEACH RD.
BIDDEFORD, MAINE

UNIVERSITY OF NEW ENGLAND MARINE SCIENCE CENTER PIER
11 HILLS BEACH ROAD
BIDDEFORD, YORK COUNTY, MAINE

NO	DATE	ISSUE/REVISION	APP
8	6/5/2025	ADDRESS PB COMMENTS	DJB
7	4/16/2025	BIDDEFORD PERMIT APP.	DJB
6	9/17/2024	REVISED PERMIT SET	DJB
5	6/27/2024	REVISED PERMIT SET	DJB
4	9/14/2023	DEP PERMIT SET	DJB
3	6/28/2023	75% DESIGN SUBMISSION	DJB
2	2/15/2023	30% DESIGN SUBMISSION	DJB
1	12/9/2022	15% DESIGN SUB REV	DJB
0	11/11/2022	15% DESIGN SUBMISSION	DJB

SHEET NAME: **ABUTMENT DETAILS**

SHEET NO.: **S-014**

DJCASTELNUOVO, VINNIE \\bost1-fs02\Data_Storage\Working\UNIVERSITY OF NEW ENGLAND\2203703 UNE Marine Science Center Pier\00_CAD\Design\Sheets\2203703-S-014.dwg - 6/6/2025

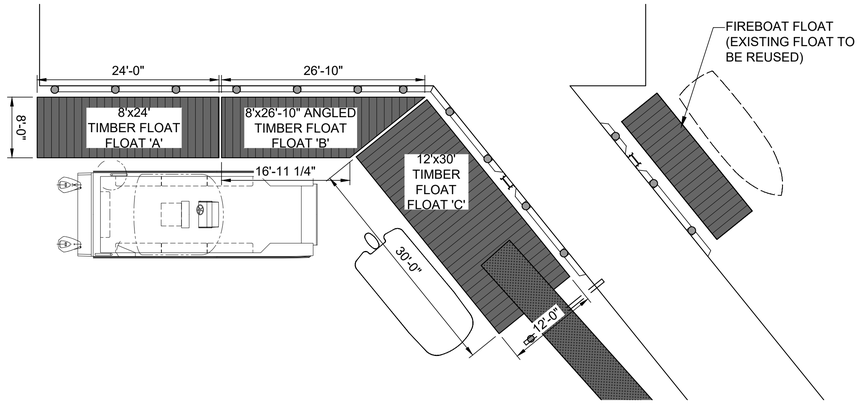

1 PLAN
FLOAT LAYOUT SCALE: 1" = 10'

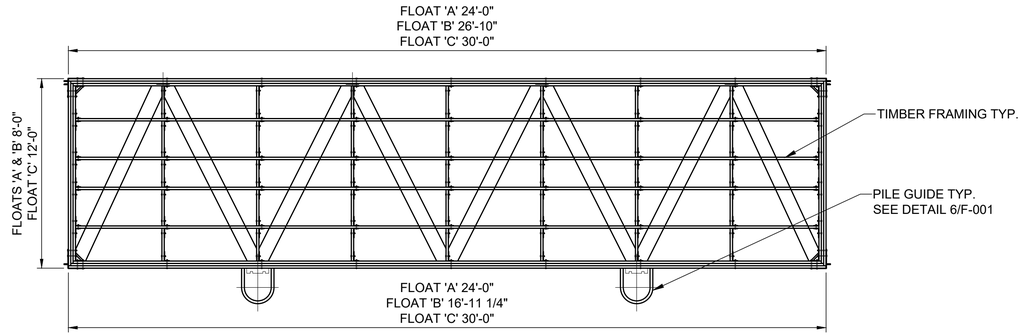

NOTES:
1. CONTRACTOR/FABRICATOR TO DETERMINE ACTUAL MEMBER SIZES PER LOADING REQUIREMENTS.

2 PLAN
TYP. FLOATING DOCK SCALE: 1" = 4'

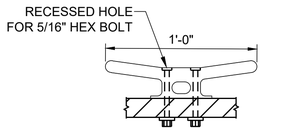

CLEAT LAYOUT:
FLOAT 'A' (4) @ EQ. SP ON SOUTH FACE
FLOAT 'B' (3) @ EQ. SP ON SOUTH FACE
FLOAT 'C' (4) @ EQ. SP ON WEST FACE

4 DETAIL
12" CLEAT SCALE: 2:1

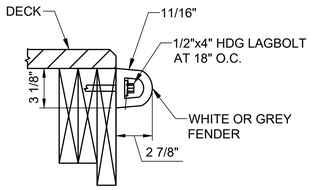

5 DETAIL
DOCK FENDER SCALE: 2:1

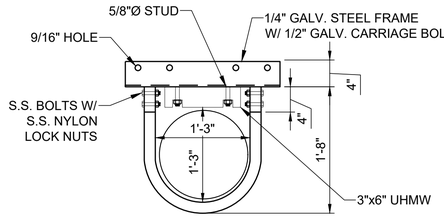

PILE GUIDE LAYOUT:
PROVIDE PILE GUIDES AT ALL TIMBER PILE LOCATIONS
FLOAT 'A' (3) REQ
FLOAT 'B' (4) REQ
FLOAT 'C' (4) REQ

6 DETAIL
PILE GUIDE SCALE: 1:1

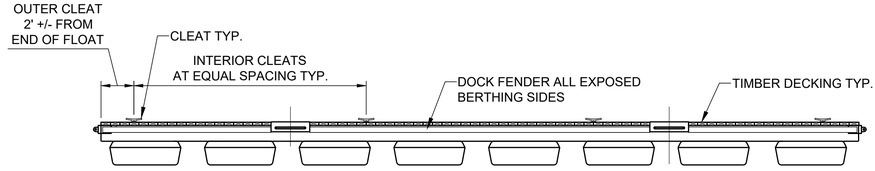

NOTES:
1. FLOTATION UNITS SHOWN ARE FOR GRAPHIC REPRESENTATION ONLY, CONTRACTOR/MANUFACTURER SHALL DETERMINE SIZE AND QUANTITY PER LOADING REQUIREMENTS.

3 ELEVATION
TYP. FLOATING DOCK SCALE: 1" = 4'

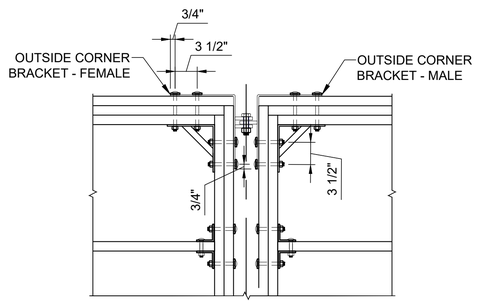

7 DETAIL
FLOAT CONNECTION SCALE: 1:1

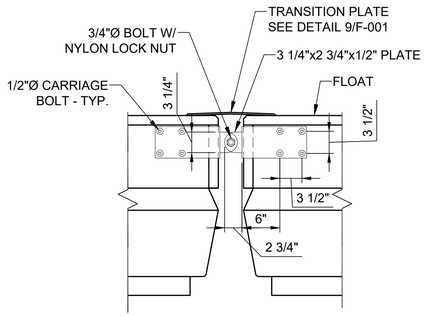

8 SECTION
FLOAT CONNECTION SCALE: 1:1

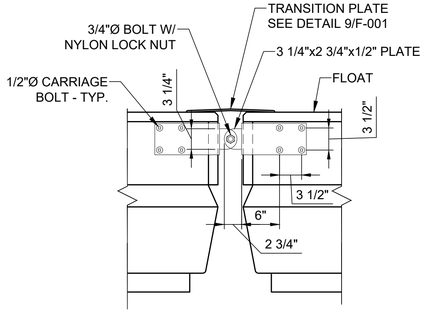

9 DETAIL
TRANSITION PLATE SCALE: 1:1

0 10 20
SCALE, FEET

0 1 2 4
SCALE, FEET

0 40 80
SCALE, FEET

ELEVATION	MLLW	NAVD88*
BFE	+19.0	+14.0
HAT	+11.6	+6.6
MHHW	+9.7	+4.7
MHW	+9.3	+4.3
MSL	+4.8	-0.2
MLW	+0.3	-4.7
MLLW	0.0	-5.0

*PROJECT DATUM

FOR PERMIT

Attention:
0 1"
If this scale bar does not measure 1" then drawing is not original scale.

STATE OF MAINE
DANIEL J. BANNON
No. 13033
LICENSED PROFESSIONAL ENGINEER
06/10/2025

Designed:	DJB
Drawn:	JAM
Checked:	BJB
Approved:	BMM
P.E. No:	13033
GEI Project	2203703

GEI Consultants
GEI CONSULTANTS, INC.
5 MILK STREET
PORTLAND, ME 04101
(207)797-8901

UNIVERSITY OF NEW ENGLAND
11 HILLS BEACH RD.
BIDDEFORD, MAINE

UNIVERSITY OF NEW ENGLAND MARINE SCIENCE CENTER PIER
11 HILLS BEACH ROAD
BIDDEFORD, YORK COUNTY, MAINE

NO	DATE	ISSUE/REVISION	APP
8	6/5/2025	ADDRESS PB COMMENTS	DJB
7	4/16/2025	BIDDEFORD PERMIT APP.	DJB
6	9/17/2024	REVISED PERMIT SET	DJB
5	6/27/2024	REVISED PERMIT SET	DJB
4	9/14/2023	DEP PERMIT SET	DJB
3	6/28/2023	75% DESIGN SUBMISSION	DJB
2	2/15/2023	30% DESIGN SUBMISSION	DJB
1	12/9/2022	15% DESIGN SUB REV	DJB
0	11/11/2022	15% DESIGN SUBMISSION	DJB

SHEET NAME
FLOAT PLAN AND DETAILS

SHEET NO.
F-001

DJCASTELNUOVO, VINNIE - \\geiconsultants.com\data\Data_Storage\Working\UNIVERSITY OF NEW ENGLAND\2203703 UNE Marine Science Center Pier\00_CAD\Design\Sheets\2203703-F-001.dwg - 6/6/2025

Harbor Master

City Of Biddeford
205 Main Street
P.O. Box 586
Biddeford, ME 04005-0586

APPLICATION DUE DATE: MARCH 15TH

Read Carefully Before Signing

MOORING PERMIT APPLICATION

(Please Print Or Type)

Date of Application _____ Permit# _____

USE: Personal Rental Comm. Fish Other _____ Summer Year Round City Tag# _____
(Circle One) (Circle One) (By Harbor Master)

TYPE: Granite Block Cement Block WEIGHT_____ HEAVY CHAIN _____ LIGHT CHAIN/NYLON _____ BOWLINE_____
(Nylon Only; Non-Floating)

BOAT REG./DOC# _____ BOAT NAME _____ MAKE _____ YEAR BUILT _____

OWNER NAME _____ HOME TEL: _____ BUS TEL: _____

MAILING ADDRESS _____ CELL. TEL: _____

PERMANENT ADDRESS _____ TEL: _____

_____ EMAIL _____

(Name, address & telephone number of local person responsible for boat, if non-resident REQUIRED)

BOAT DESCRIPTION: Color_____ Trim_____ Length _____ Draft_____ Propulsion _____

OPEN CABIN CANOPY LOBSTER CRUISER SAIL WORK ROW OTHER_____

SPECIFIC LOCATION OF MOORING AREA REQUESTED _____

DATE PRESENT MOORING PUT DOWN _____ LAST INSPECTED _____ BY WHOM_____

By signing this mooring permit application for the City of Biddeford I hereby expressly give my permission to the Harbor Master, the Assistant Harbor Master or anyone lawfully designated by the Harbor Master to raise, lift, possess, transfer or otherwise handle any lobster traps, buoys, cars, wharfs, weirs, nets or any other sort of fishing gear belonging to me as the licensed owner which appears in any channel to and from any harbor which is designated by the Biddeford City Ordinance as an area in which lobster gear or fishing gear of any type is prohibited or which appears within 100 feet of any mooring in violation of an ordinance for the city of Biddeford. I further give my permission to the Harbor Master, Assistant Harbor Master or the Harbor Master's designated agent permission to remove, transfer and secure any fishing gear of any type or nature which is found in violation of any ordinance of the city of Biddeford. I further agree to pay for any and all costs related to the removal, transfer, transportation and storage of said fishing gear. Permission by me, by signing this permit, is given pursuant of Title 12, M.R.S.A. §6434.
This permit is non-transferable and is for the use of the above named boat only, except on a temporary basis at discretion of Harbor Master. The location is subject to change at any time at discretion of Harbor Master or Deputy as conditions dictate. Holder of permit is responsible to set mooring and make adjustments as required for the safety of adjacent boats. Permit numbers must be painted on mooring float in at least 3" letters of a contrasting color.
If mooring is already in place the Harbor Master/Assistant will go to location with owner to identify and approve or reassign location. If a new mooring, Harbor Master/Assistant will inspect and oversee placement of mooring.
Any boat on a licensed mooring taking on water and in danger of sinking, the Harbor Master may authorize a private contractor to pump out said boat at the expense of the owner. The owner must pay contractor within 60 days or lose mooring privileges.
Registration form and fee must be received before March 15 and mooring in before June 30 or mooring will be considered abandoned and location reassigned, unless prior arrangements have been made with the Harbor Master.
Application permit fee $10.00 to be applied against the mooring fee.

Signed _____ Date _____

THIS PERMIT APPLICATION APPROVED BY HARBOR MASTER/ASSISTANT _____

REQUEST APPROVED YES ☐ NO ☐ DATE _____ EXPIRATION DATE_____

FEE: ~~$125~~ 180

DATE RECEIVED _____ NEXT INSPECTION DUE DATE_____

BY _____

CHECK/MONEY ORDER #_____ CASH

Whitten, Nan

From: Paul Lamontagne <paullamontagne.maine@gmail.com>
Sent: Saturday, July 5, 2025 7:38 PM
To: Planning Board
Subject: This UNE pier decision seems pretty simple

Caution: This is an external email. Please take care when clicking links or opening attachments. When in doubt, contact the IT Department

Dear Planning Board,

Although I now live in western Maine near the NH border, my grandparents allowed me to spend many, many hours with them on the Saco River when I was growing up. They lived in Biddeford all their lives. These days I will still come over to Biddeford fairly regularly with my own boat, putting in at Marblehead and enjoying the day, as I did on the 4th of July this year.

A fellow boater I've known for many years told me about the UNE thing yesterday, so this morning I went to the Biddeford website, downloaded all the documents, and watched all the videos. Here's my point of view:

--- The chairperson of the planning board made an excellent point during the May 21st meeting. You are guided by a code of ethics to make sure every claim that UNE makes is documented.
--- It's pretty clear that the guys who have moorings where UNE wants to build are not moving, so I don't see how you can approve UNE's application. Other people are already there.
--- The pier has not been reviewed or approved by a real harbor master.
--- The engineering outfit that UNE hired to sell their pier to you wrote in a memo, contained in the materials that you have reviewed, that the place Biddeford's harbor master suggested has deeper water than the location UNE wants. I mean…c'mon! Why can't the university use common sense?
--- I read your code of ethics very carefully. You are each required to obtain what information and knowledge is necessary to make the wisest decision possible. It seems to me there's a better location than what UNE proposed, and the planning board has no choice but to investigate that issue.

To conclude, UNE's own consultant says there's deeper water where the harbormaster wanted the pier to go all along, making it a better place for a 60-foot research vessel. Also, putting it in the deeper water would avoid the entire problem of current mooring owners, who have made it clear that they're not moving.

I don't see that you have any choice but to deny this application, and invite UNE to submit another one that is thought out in a much better way.

That's my opinion, and thanks for listening.

Paul

Whitten, Nan

From: Hills Beach John <hillsbeachjohn@yahoo.com>
Sent: Monday, July 7, 2025 9:49 AM
To: Center, Harry; attorney.general@maine.gov
Cc: Lewis, Kayla; Plotkin, Alexa; Beaudette, Stephen; Dubois, Matthew; Angers, Roch; Patoine, Larry; susan.deschambault@biddefordmaine.org; Planning Board; Whitten, Nan; Grohman, Martin; Phinney, Brian; Randy Seaver; newsdesk@sacobaynews.com; Dina Mendros; srichelieu@metln.org; Galbraith, David
Subject: Biddeford people trust Planning Board's ethics

Caution: This is an external email. Please take care when clicking links or opening attachments. When in doubt, contact the IT Department

Hi Harry,

The City Planner wrote, “The Board may only base their decision on the specific criteria listed in the Site Plan and Shoreland Zoning laws as they specifically relate to Piers & Docks.” You wrote, “I concur with David’s position.”

After that explanation circulated in the community, I got a ton of feedback. I regret to say some of it was angry feedback. If I had to paraphrase, I would say community sentiment is that the Planner’s analysis is an extremely narrow interpretation, concocted to encourage the Planning Board to approve UNE’s application. It was pointed out to me that, better than a single opinion, a controlling and legally binding document exists, “Biddeford Planning Board RULES OF PROCEDURE AND CODE OF ETHICS.” Excerpts:

- “The Planning Board’s purpose is to implement the Comprehensive Plan and to foster coordinated and harmonious development…that will…best and most efficiently promote the public health, safety, and general welfare.”

- “Appointment to the Planning Board…represents a public trust…”

- “Board members are therefore expected to keep consideration of the general public interest foremost in their deliberations.”

- “Board members are also expected to retain an open mind to all viewpoints.”

- “…the Board should attempt to draw out and clarify the positions of people on all sides of the issue…”

- “Each Planning Board member has the responsibility to acquire whatever information and knowledge is necessary to fully understand and make wise decisions and recommendations in the interest of the City.”

- “Members are encouraged to expand their knowledge and understanding of planning issues…”

- "…members have the responsibility to insist that they are provided…information of sufficient scope and depth to allow them to fully understand the issues before the Board and the alternative actions available to the Board."

- "If the application….and other documents…are insufficient to enable a Board member to fully understand the issues immediately before the Board, that Board member has the responsibility to ask questions…to acquire the necessary understanding."

- The Planning Board has the responsibility to ensure that the decision-making process it applies to any issue before it is not only rational, but is also perceived as rational."

- "Furthermore…findings should be supported by information available to the Board, whether it is information…contained in…(a) document submitted to the Board, or included in testimony presented before the Board…"

- "The Board should thus explicitly evaluate all facts, alternatives, means, and consequences relevant to its decisions."

I have been asked by my neighbors to point out that members of the Planning Board took an oath not to faithfully adhere to the opinion of the City Planner, but to faithfully adhere to the Rules of Procedure and Code of Ethics.

The Planner is trying to persuade the Board ***not*** to look at important information. Whereas the Code of Ethics specifically instructs each Board member to "evaluate all facts, alternatives, means, and consequences." Further, "Each Planning Board member has the responsibility to acquire whatever information and knowledge is necessary to fully understand and make wise decisions and recommendations in the interest of the City."

We suggest that the Planner's advice to the Board directly contradicts the Rules of Procedure and Code of Ethics. This is alarming, given the fact that the Planning Board has been left completely unadvised by the Harbormaster, the Assistant Harbormaster and the Biddeford Harbor Commission. And as the Maine Harbor Masters Association has pointed out, no certified Harbormaster has reviewed or approved UNE's application.

With all that said, despite the unprecedented and highly irregular circumstances of this situation, I think Biddeford citizens are very confident that each member of the Planning Board will adhere to the Rules of Procedure and the Code of Ethics. In our opinion, that includes the certainty that Board members will "acquire the necessary understanding" of water depth, current, wind, silt build-up, extreme weather events, extreme high tides, extreme low tides, boat traffic on the river, moorings in the immediate area, etc.

As always, Harry, thank you for your professional and courteous consideration of information that this community submits to you.

Respectfully,

JS

Whitten, Nan

From: Hills Beach John <hillsbeachjohn@yahoo.com>
Sent: Tuesday, July 8, 2025 10:41 AM
To: Lewis, Kayla; Patoine, Larry; Dubois, Matthew; Beaudette, Stephen; Whitten, Nan; Galbraith, David; Deschambault, Susan; Angers, Roch
Subject: For the record, UNE denied Mr. Patoine's request

Caution: This is an external email. Please take care when clicking links or opening attachments. When in doubt, contact the IT Department

During the May 21 Planning Board meeting, member Larry Patoine appropriately asked that the Board be supplied with a copy of the application that UNE filed with the National Institute of Standards & Technology (NIST.)

Buried in the almost one thousand pages of materials that the Planning Board has made available online is notification to the Board and Mr. Patoine that UNE has refused Mr. Patoine's request. That is made clear at the bottom of page 5 in a memo written by Alan Thibeault and submitted to the City on June 11, 2025.

Sincerely,

JS

Whitten, Nan

From: Hills Beach John <hillsbeachjohn@yahoo.com>
Sent: Monday, June 30, 2025 10:26 AM
To: Center, Harry; attorney.general@maine.gov
Cc: Galbraith, David; Planning Board; Whitten, Nan; Phinney, Brian; Grohman, Martin
Subject: A request for legal analysis: city's regulatory process

Caution: This is an external email. Please take care when clicking links or opening attachments. When in doubt, contact the IT Department

Good morning, Harry, I hope you had a great weekend.

Al Thibeault said during the site walk on June 9 that he knows nothing about boats and nothing about the river. The Maine Harbor Masters Association has confirmed that Wayne Duffett of TEC Associates is not a Harbormaster. Just like Al Thibeault, he doesn't know the river --- no Harbormaster has approved UNE's application. Biddeford went totally unrepresented at the Saco River Corridor Commission --- our delegate abstained completely from all discussion, did not raise concerns, and did not vote. The DEP Commissioner denied a request for a public hearing. The U.S. Army Corps confirmed that all public input submitted until they made their decision was tossed into the garbage can and not considered.

Further, the Maine Harbor Masters wrote to Jim Bennett on June 4, 2024, "...we recommend that you work within the review hierarchy laid out in your harbor ordinance." But as he was busy ruining the city's finances, Bennett also made sure that the Harbormaster could not review the UNE proposal. He made sure the Assistant Harbormaster could not review the UNE proposal. As a result, he in effect liquidated the Harbor Commission, which has ceased to function or even meet. It never reviewed the UNE proposal.

Clearly UNE is fast-tracked on their way to a clean sweep. Their threat to sue the City if their exact location is not approved has been extremely effective. The largest structure ever built on the lower Saco River, in the busiest part of the river, subject to very dynamic tidal and weather forces, is going to slip by with absolutely nobody in authority looking at those dynamic forces to which the pier and a 60-foot vessel will be subjected. That's like Big Pharma rushing a new opioid onto the market without the FDA looking at potential side effects.

Many suspect Bennett intended this specific outcome all along --- easy approval without meaningful review. Certainly UNE is delighted with how far they have come without anybody in authority looking at actual river conditions.

As I have written before, I have the highest respect for your integrity and legal analysis. And therefore I am quite sure you were 100% accurate when you wrote the following:

“At this time, I see no basis for the City’s Planning Board to deny this permit based upon the water depth at the location, the current, or any of the accusations made at the last meeting - as there are no standards within the City’s Code of Ordinances/Shoreland Zoning Ordinance that would justify or support the denial of a pier based on such claims by the opponents.”

I understand and respect your strict interpretation of the Code. For the benefit of local residents and of Planning Board members, I’d like to ask one question. Do the City’s Code of Ordinances/Shore Ordinance in any way *prohibit* members of the Planning Board from asking questions about water depth, current, wind, silt build-up, extreme weather events, extreme high tides, extreme low tides, boat traffic on the river, moorings in the immediate area, etc.?

Thank you, Harry. I understand that the complete disintegration of the normal regulatory process has put you into a very difficult position, unfairly so. We are grateful for your continued service to the people of Biddeford.

Whitten, Nan

From: Hills Beach John <hillsbeachjohn@yahoo.com>
Sent: Monday, June 23, 2025 8:47 AM
To: Randy Seaver; sean.a.murphy@charter.com; desk@newscentermaine.com; wmtw@wmtw.com; tvmail@wgme.com; dinamendros@gmail.com; newsdesk@sacobaynews.com
Cc: Emily.Horton@mail.house.gov; pam_buck@collins.senate.gov; Sarah_Stanley@king.senate.gov
Subject: Collins, King, Pingree staffers lock arms, advance UNE pier secrecy
Attachments: 25.06.23 communications HISTORY.pdf

Caution: This is an external email. Please take care when clicking links or opening attachments. When in doubt, contact the IT Department

Collins, King, Pingree staffers lock arms, advance UNE pier secrecy

PRESS CONTACT: John Schafer, HillsBeachJohn@yahoo.com, 207-294-2410

(Biddeford, Maine) It appears Saco and Biddeford residents will not get information requested from Maine's federal delegation about components of a federal grant awarded to the University of New England (UNE) by the National Institute of Standards & Technology (NIST).

Several months ago a community organizer asked if the $3.5 million grant to help build a new marine research pier on the Saco River has a portion of its funds set aside for "administration" of the grant and if it does, what percentage of the funds UNE would pocket for that function. Local field representatives for U.S. Senator Susan Collins, U.S. Senator Angus King and U.S. Representative Chellie Pingree won't answer the two questions.

"Today I'm distributing the email history. It shows constituents have been polite in requesting the information, and it seems clear that the failure to even reply is intentional," said John Schafer, former Chair of the Biddeford Harbor Commission.

(One document attached: 1) email messages to Collins, King, & Pingree staffers, followed by 2) Schafer dialogue with Collins' staff about NIST grant.)

Schafer said he's not surprised by the stonewalling, because it follows a successful effort earlier this year by Collins' office to dodge a request for contact info at NIST so that he could file a FOIA request and obtain a copy of the application UNE filed to secure the grant.

"I made several requests, they tried several times to talk to me on the phone instead of just giving me the information, and ultimately never provided the contact information after promising it to send it. They also denied ever having been in contact with NIST via email, which I found hard to believe. After all, Senator Collins sent out a press release taking full credit for securing the grant for the university," Schafer said.

Last Wednesday the Biddeford Planning Board tabled UNE’s effort to secure approval for the proposes research pier.

---30---

Dear Biddeford Planning Board,

I wrote to you recently, and to re-cap very briefly, I spent 46 years in the commercial fishing industry. I was appointed to Saco's very first Coastal Waters Commission, was executive director of the local Chamber of Commerce for several years, served as Director of Transportation for BSOOB Transit, and founded the Northwest Atlantic Marine organization (NAMA), an organization that emphasized *collaboration* and *rational discussion* between commercial fishermen and federal regulators. Hardly an easy task, I assure you!

I have a positive relationship with UNE and its president, and always look forward to teaching my seminars with students who are in the Marine Science Program. My relationship with UNE spans over 15 years. I agree 100% that UNE needs a new pier for its ambitious and critical research activities.

I attended the May 21 Planning Board meeting, and the Board left no doubt that it will do a site survey. Mr. Dubois correctly surmised that this should happen at low tide, and Mr. Patoine asked that a system for easily determining river depth be in place. Since getting the Board onto the river is now a certainty, I would like to volunteer my services to help the Planning Board achieve this mission. And of course in the spirit of transparency and openness, which as a common theme during the planning board meeting, entrusting me as a third party, we can assure you these important criteria will be addressed.

I've been brainstorming just a bit, and here are some initial thoughts:

- I assume UNE will want at least two or three people on board. The City will want Board members, the Planner, and probably a reporter or two to act as the eyes and ears for the public. I anticipate a handful of others as well, so my guess is between 12 and 15 people in total.
- Most likely you'll need three boats, and it's less likely but possible you'll need four.
- At least one of the boats should have a depth finder. Two would be better. I can help round up the boats.
- You'll want at least one independent person who knows the river extremely well, and who can serve as a captain for the expedition. That person would coordinate navigation of the boats, and serve as an authority figure for any questions that the Board, UNE or the press may have about how the river flows. That person should anticipate coordinating the outing with the Biddeford Planning Department. I'd be happy to assist.
- Off the top of my head, I think Saco's present Harbormaster would be a good candidate. I am unaware of any public statements he has made about UNE's application. Together, he and I can provide the necessary expertise and knowledge to accomplish this important sight visit.

- Since the main question at hand is depth at two locations on the river, the captain of the expedition will be able to figure out the best way to safely acquire the data that the site visit is intended to collect.
- A good launching point for the site visit would be the Camp Ellis pier. Mr. Angers mentioned that he would like to see the site from the Saco side as well, so his request would be satisfied. I would be happy to work with Saco City Hall to see if free parking passes could be arranged for everyone who will be on the boats that day.

That's just a brief sketch, but I hope it illustrates the type of planning that's going to be necessary. Several months ago I wrote to James Herbert, president of UNE, and offered my services to help bring parties in the community together so that the rancor could be reduced, and important work completed. If I can help the City of Biddeford complete the mission of a professional site survey, then I volunteer in the same spirit of collaboration with which I offered my assistance to President Herbert.

You can reach me by phone at 207-590-9614 or by email at cpendle5@gmail.com.

Sincerely,

Craig A. Pendleton

Craig A. Pendleton
81 Cascade Road
Old Orchard Beach, ME 04064

Tonight, we need to remove the passion from the conversation and focus on the technical and legal aspects of this proposal.

And based on these alone I would argue that you cannot approve this project.

15 part C The facility shall be no larger in dimension than necessary to carry on the activity and be consistent with the surrounding character and uses of the area

The site walk was helpful to appreciate the size and scale of this project. Speaking of scale, this site walk confirmed that the numerous regulatory requirements make this so massive it is no longer meet Sec 15c

I implore the University provide a scaled 3D computer rendering to demonstrate this. This will severe restrict movement in and around this area forever.

A 3D rendering will affirm if this is approved, this will be Biddeford's new MERC.

Sec 15 sec 10a When necessary, the removal of trees and other vegetation to allow for construction equipment access to the stabilization site via land must be limited to no more than 12 feet in width. When the stabilization project is complete, the construction equipment accessway must be restored.

The entrance will be a 20' road (not `12 per the law), combined with the turn around and the building as a backdrop will rip open the vegetation to a massive scale. Fire department requirements conflict with an ordinance, the ordinance-the law- still stands.

I also believe it's a violation of original the conditions of approval for the Marine Science Center.

Harry center who gave guidance to the board on the relevant technical sections of the shoreland zone. In addition to the technical areas they were provided, but there are other sections I want to bring to your attention.

Section 1. Purposes. [Ord. of 9-15-1998(4)]

The purposes of this ordinance are to:

to protect fish spawning grounds, aquatic life, bird and other wildlife habitat;

to protect commercial fishing and maritime industries; This project does not

help me as a Maine guide or any of the working fisher people. It will negatively impact us.

to conserve shore cover, and visual as well as actual points of access to inland and coastal waters; to conserve natural beauty and open space; We all use this area to access the river, the beach and the fish. How does this project conserve natural beauty and open space?

UNE by its own admission doesn't have or need the capacity this provides. They already have facilities that can be expanded. Where I come from, we focus on needs, not wants. UNE doesn't need it,, and we don't want it or need it.

Sec 7. Whenever a provision of this ordinance conflicts with or is inconsistent with another provision of this ordinance or of any other ordinance, regulation or statute administered by the City of Biddeford, the more restrictive provision shall control, except that where there are conflicts or inconsistencies between Section 12 (Nonconformance) of this ordinance and any other ordinance, regulation or statute administered by the City of Biddeford, Section 12 (Nonconformance) of this ordinance shall prevail.

This is the second part

In 2001 the SRCC imposed a 250 no build zone. Its important not only to recognize the requirement and that it relates to the ordnance conflicts provision of this ordinance. But let's understand the intent.

During the meeting at the SRCC where this was agreed in order to gain 50' height on the dormitories, in response, Sandra Featherman stated on the record that "the University has absolutely no intention to build within the 250 of the river, and that the city as well as the University believe the buffer the be very sensitive and necessary for the protection of the river."

The intent of UNE accepting this condition was clear. The SRCC reason was crystal clear as the minutes indicated. No more building in the 250 buffer zone period. No exceptions.

This project does not meet the purpose or intent of the shoreland zone and is in direct conflict with the SRCC and UNEs previously stated in intentions, and previous conditions of approval.

To the planning board, you are not responsible for the city administrations failure to guide UNE. Its not your Fault UNE overreached. Under article 10, section 1.b.3 It's your job only to review and approve, approve with conditions or disapprove. Based on the ordinance, based on the law, you must disapprove.

I submit these comments and the minutes from the SRCC from 2001 and 2017 for the record.

Whitten, Nan

From: Pier Review <unepierreview@yahoo.com>
Sent: Tuesday, July 8, 2025 3:17 PM
To: Randy Seaver; wmtw@wmtw.com; tvmail@wgme.com; desk@newscentermaine.com
Subject: In UNE pier review, Biddeford planner puts heavy thumb on scale
Attachments: galbraith to chief.pdf

Caution: This is an external email. Please take care when clicking links or opening attachments. When in doubt, contact the IT Department

In UNE pier review, Biddeford planner puts heavy thumb on scale

MEDIA CONTACT: Kyle Noble, UNEPierReview@yahoo.com, 207-468-5296

(Biddeford, Maine) After the Biddeford City Council and Planning Board publicly scolded the city's planner for repeatedly pressuring them to approve development projects without full documentation, it has come to light that the planner personally tried to pave the way for approval of an application that the University of New England (UNE) has in front of the planning board.

(VIDEO, planner reprimanded by Biddeford Planning Board and City Council: https://youtu.be/-Kfno9gmvAY)

Galbraith discovered that a key agreement between the Biddeford Fire Department and UNE doesn't exist, so he tried to manufacture one.

On May 28, a Hills Beach resident had written, "The Board should request any evidence of a signed agreement between the City and UNE about hosting a fireboat. If one doesn't exist, the need isn't documented, and the pier is over-designed and too large by definition." On June 9, a planning board member asked Galbraith for a copy of the agreement. The next day Galbraith wrote to Biddeford's fire chief, "I would love to provide a letter to the Board" about an agreement between the fire department and UNE. (Email excerpts attached.)

"It is not the planner's job to write UNE's application for them," said Kyle Noble, a Biddeford resident and former city councilor. "He is way out of line. Begging the fire chief to manufacture a document is an insult to the intelligence and integrity of this board."

Coincidentally, discovery of the planner's appeal to the fire chief came after he wrote to the city attorney last week trying to limit the scope of planning board review. On Thursday he wrote that for UNE's proposed dock, a very large structure that would dominate the lower Saco River, the planning board must strictly avoid looking at tides, river depth, currents, silt build-up, and many other issues that typically affect any marine structure. "The Board may only base their decision on the specific criteria listed in the Site Plan and Shoreland Zoning laws as they specifically relate to Piers & Docks," he wrote.

Noble said area residents have faith in Biddeford's planning board members, despite efforts by other

government authorities to circumvent normal regulatory review and ignore public input.

“The general feeling is that the planning board members will successfully ward off all attempts by UNE and city staff to unfairly manipulate the process, as they have been trying to do all along. This board is capable of resisting maneuvers to short-circuit proper procedures,” he said.

---30---

Whitten, Nan

From: Fishing Woes <fishingwoes@gmail.com>
Sent: Wednesday, July 9, 2025 4:34 PM
To: Whitten, Nan
Cc: Lewis, Kayla; Deschambault, Susan; Patoine, Larry; Angers, Roch; Beaudette, Stephen; Dubois, Matthew; Plotkin, Alexa; Galbraith, David; Center, Harry; randyseaver01@gmail.com; dinamendros@gmail.com; srichelieu@metln.org; newsdesk@sacobaynews.com; Iriqat, Adi
Subject: Re: Repeating official request to Biddeford City Planner

Caution: This is an external email. Please take care when clicking links or opening attachments. When in doubt, contact the IT Department

The mooring owners are anything but anonymous. We have been very public. We are:

Tom Hatch, mooring #12, Bob Brackett, mooring #150, Gregg McPherson, mooring #138, William Mitchell, mooring #48, Captain Shawn Tibbetts, mooring #126, Mike Ramunno, mooring # 46, and Steve Goebeil, mooring number 248.

We are unified, and we're not moving. We submitted a signed Letter of Notice to the Planning Board on May 21, 2025, and we sent a letter to UNE president James Herbert on July 3, 2025.

The site on the Saco River that the Planning Board is looking at this evening is unavailable to UNE. That's a fact.

On Tue, Jul 8, 2025 at 1:43 PM Whitten, Nan <Nan.Whitten@biddefordmaine.org> wrote:

> ***Good Afternoon***
>
> ***The purpose of the site walk is a workshop for the Planning Board; it is not a forum to make decisions or announcements as such. If he feels it is appropriate, the City Planner will make the announcements you request at the Planning Board meeting of July 16th.***
>
> ***If you would like to identify yourself, we would be happy to post the letter with the agenda packet but where it is anonymous, it will be kept in the file.***

Thank you for your input, we will pass it onto the applicant and keep it on file.

Nan Whitten

City of Biddeford

Office Manager

Planning & Development

207-284-9115

From: Fishing Woes <fishingwoes@gmail.com>
Sent: Tuesday, July 8, 2025 1:05 PM
To: Lewis, Kayla <kayla.lewis@biddefordmaine.org>; Deschambault, Susan <Susan.Deschambault@biddefordmaine.org>; Patoine, Larry <Larry.Patoine@biddefordmaine.org>; Angers, Roch <Roch.Angers@biddefordmaine.org>; Beaudette, Stephen <Stephen.Beaudette@biddefordmaine.org>; Dubois, Matthew <Matthew.Dubois@biddefordmaine.org>; Plotkin, Alexa <Alexa.Plotkin@biddefordmaine.org>; Galbraith, David <David.Galbraith@biddefordmaine.org>; Whitten, Nan <Nan.Whitten@Biddefordmaine.org>
Cc: randyseaver01@gmail.com; dinamendros@gmail.com; srichelieu@metln.org; newsdesk@sacobaynews.com
Subject: Repeating official request to Biddeford City Planner

Caution: This is an external email. Please take care when clicking links or opening attachments. When in doubt, contact the IT Department

Since so much time and effort has been invested to arrange tomorrow's site walk at UNE, it is crucially important that Biddeford's city planner verbally inform everyone who makes the effort to attend, at the start of the meeting, that the viewing party will be looking out on a site on the river that is unavailable to UNE for building a pier. Thank you in advance for being fully transparent about this.

FACTS:

1. UNE has proposed a pier in a location that is unavailable to them. Other mariners are already legally moored in that spot, and have been for many years.

2. The current mooring holders categorically reject UNE's offer to pay for our relocation.

SUPPORTING INFORMATION IN DOCUMENTS:

1. Al Thibeault, memo June 11, 2025: "The Biddeford Mooring Permit Application clearly states 'The location is subject to change at any time **at the discretion of Harbor Master** or Deputy…'"

2. Biddeford Harbormaster, email to mooring holders, April 12, 2025: "Several mooring owners in the lower part of the Saco River have recently expressed concerns to me about the imminent removal or relocation of their mooring. You may have a similar concern. I am writing to let you know that, as Harbormaster, I have no plans to remove or relocate any existing mooring."

3. Mooring owners, letter to UNE president James Herbert, July 7, 2025: "We are the local mooring owners. We will all be affected by your proposed pier location, and two of us sit directly *on* your coveted location. *None of us are moving*."

Whitten, Nan

From: Pier Review <unepierreview@yahoo.com>
Sent: Thursday, July 10, 2025 9:59 AM
To: Randy Seaver; srichelieu@metln.org; newsdesk@sacobaynews.com; dinamendros@gmail.com; wmtw@wmtw.com; tvmail@wgme.com; desk@newscentermaine.com; sean.a.murphy@charter.com
Subject: Media update after yesterday's UNE pier site walk
Attachments: Put Pier Here Composite.jpg

Caution: This is an external email. Please take care when clicking links or opening attachments. When in doubt, contact the IT Department

- Regulatory review of UNE's proposed marine sciences research pier on the lower Saco River continued yesterday, Wednesday, July 9, 2025. The site walk began at 5:00 p.m. and was a repeat of the June 9 site walk, which Biddeford's city planner had scheduled despite knowing that three planning board members could not attend.
- The planner did not attend the site walk last night. His absence came after Tuesday's press announcement revealing his hasty attempt last month to persuade the planning board that some of some sort of official agreement was in place between the Biddeford Fire Department and UNE. (No such agreement exists.)
- Photo attached. In advance of the site walk, residents erected a sign on public land at the low tide mark. Text on the sign read, "PUT THE PIER HERE, LESS IMPACT ON THE MOORING FIELD AND NAVIGATION."
- The sign was in the suggested alternative location that Biddeford's harbormaster recommends for the pier. (The harbormaster is under orders from the City to remain silent about UNE's application.)
- The sign is in the general location UNE's attorney Ron Schneider claimed has no deep water, and therefore a pier there "would sit in water too shallow to use." Schneider made his false declaration while threatening to sue the City of Biddeford.
- During the site walk last night, Schneider ordered the former chairman of Biddeford's Harbor Commission to tell whoever put the sign up to remove it.
- The sign, however, was not on UNE's property.
- The sign was in the general location GEI Consultants described in a memo to UNE that directly contradicts Schneider. GEI is UNE's hired consultant. On November 28, 2023 they wrote, "The suggested alternative location does have greater depth at the main berth, approximately 11 to 12 feet at MLLW."
- Last week the city planner instructed the planning board that, in reaching a decision, it cannot consider factors like water depth, current, tides, other moorings, ice flow, etc.
- Even at this late stage of regulatory review, no certified Harbormaster has reviewed or approved UNE's application.

The Biddeford Planning Board meets next Wednesday, July 16, to continue its deliberations on UNE's application. The meeting will be at 6:00 p.m. at Biddeford City Hall.

CITY OF BIDDEFORD

Planning and Development Department

David C.M. Galbraith
Deputy Director/City Planner
205 Main Street
P.O. Box 586
Biddeford, ME 04005
(207) 284-9115
David.Galbraith@biddefordmaine.org

PLANNING BOARD STAFF REPORT

TO: Chair Plotkin and Members of the Biddeford Planning Board

FROM: David C.M. Galbraith, Deputy Director/City Planner

DATE: July 28, 2025

RE: 2024.34 Final Plan Review – Site Plan and Shoreland Zoning Review for the University of New England (UNE) / Proposed Construction of a Marine Science Center Research Pier to be located at 11 Hills Beach Road (Map #52, Lot 4) located in the City's Institutional (IN) Zoning District.

MEETING DATE: August 6, 2025, at 6:00 PM

1. REVIEW HISTORY:

The subject application has had the following hearings/meetings:

Planning Board Review History:
Sketch Plan Review - May 21, 2025;
Site Walk June 9, 2025;
Preliminary Review (Tabled)- June 18, 2025;
Site Walk #2 – July 9, 2025;
Preliminary Review (#2) – July 16, 2025 – Preliminary Approval and Waivers approved.
Final Plan Review – August 6, 2025.

This project was last discussed during the July 16, 2025, Planning Board meeting where the project was granted preliminary plan approval. During the same hearing the Applicant requested four (4) waivers which were also granted by the Board. The requested / granted waivers are outlined below:

Waivers Requested / Granted:

A. Article XI.II. Section 5.B.1.a. (post development runoff)
B. Article XI.II. Section 5.B.1.e.3. (Slopes steeper than 2:1 in ledge).
C. Article VI. Section 26.F.: (cut or fill slopes that exceed 3 horizontals to 1 vertical).
D. Article XIV. Section 15.H.4. (Road and driveway banks shall be no steeper than a slope of 2 horizontal to 1 vertical).

The Site Plan and Shoreland Zoning approval and the four (4) requested waivers were approved by a 3-2 vote by the Board with members Plotkin, Patoine and Deschambault voting in the affirmative and two (2) members voting in the negative (Angers and Dubois).

The application before the Planning Board is a request for Final Plan Approval.

RE: Case # 2024.34 Final Plan Review – Site Plan and Shoreland Zoning Review for the University of New England (UNE) / Proposed Construction of a Marine Science Center Research Pier to be located at 11 Hills Beach Road (Map #52, Lot 4) located in the City's Institutional (IN) Zoning District.

MEETING DATE: August 6, 2025, at 6:00 PM

2. INTRODUCTION

Tom Saucier, PE of Site Design Associates, is representing the University of New England (UNE) who is applying for Final Site Plan Review within the Shoreland Zoning District. The University of New England (UNE) proposes to construct a new pier on the Saco River adjacent to the Girard Marine Science Center (GMSC) to support research and educational programming. The project has been in development for more than 10 years and has gone through extensive planning and alternatives analysis in achieving the design that is being proposed.

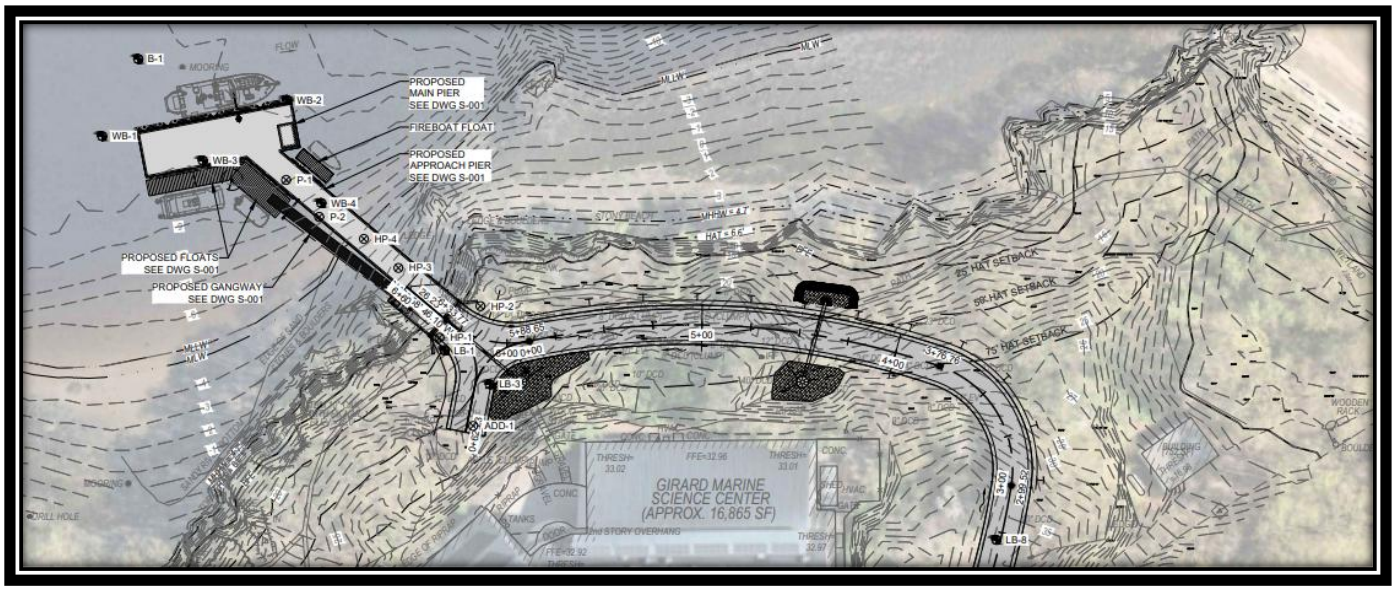

Proposed Marine Science Center Research Pier

It should be noted that the Planning Department received the formal application for this project on April 16, 2025. However, the case # that was assigned to this project was in 2024 (Case # 2024.34) as that is when the Planning Department started receiving comments from the public on this application (prior to application submittal), and Staff wanted to make certain that any and all correspondence related to this matter be saved within the public record for complete transparency. These submitted emails / letters have been consistently forwarded to the Planning Board and the University New England and have been maintained by the Planning Department.

RE: Case # 2024.34 Final Plan Review – Site Plan and Shoreland Zoning Review for the University of New England (UNE) / Proposed Construction of a Marine Science Center Research Pier to be located at 11 Hills Beach Road (Map #52, Lot 4) located in the City's Institutional (IN) Zoning District.

MEETING DATE: August 6, 2025, at 6:00 PM

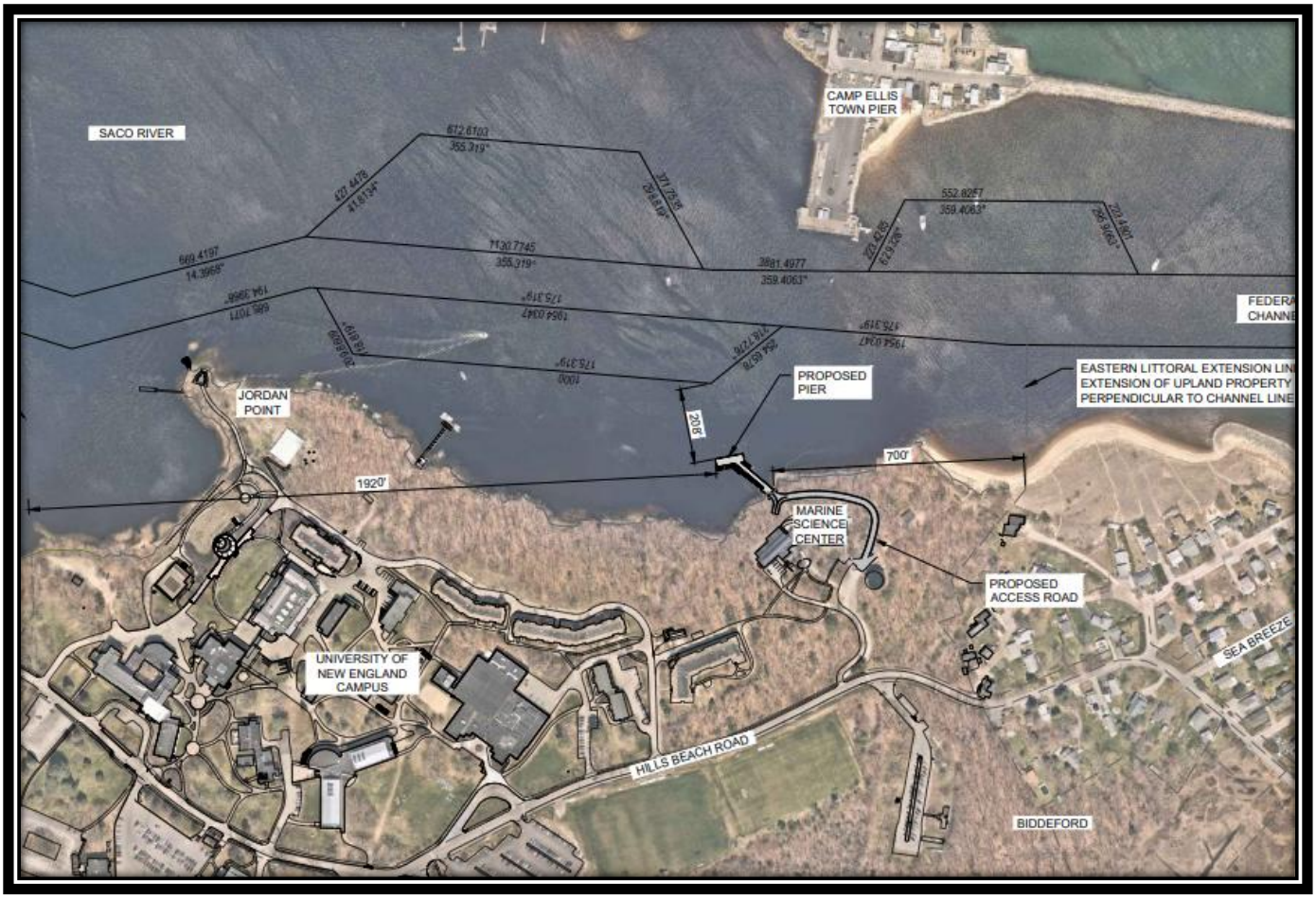

University of New England (UNE) – proposed Marine Science Center Research Pier

The University of New England (UNE) campus is located along the Saco River in Biddeford, ME. The Marine Science Center is located on the waterfront at the easterly end of campus approximately opposite Camp Ellis in Saco. To support MSC research activities, UNE proposes to construct a pier from the shore adjacent to the MSC into the Saco River to provide an all-tide access facility for small and shallow draft vessels (skiffs, landing craft, up to approximately 3-foot draft), with tidally-restricted access for larger vessels.

RE: Case # 2024.34 Final Plan Review – Site Plan and Shoreland Zoning Review for the University of New England (UNE) / Proposed Construction of a Marine Science Center Research Pier to be located at 11 Hills Beach Road (Map #52, Lot 4) located in the City's Institutional (IN) Zoning District.

MEETING DATE: August 6, 2025, at 6:00 PM

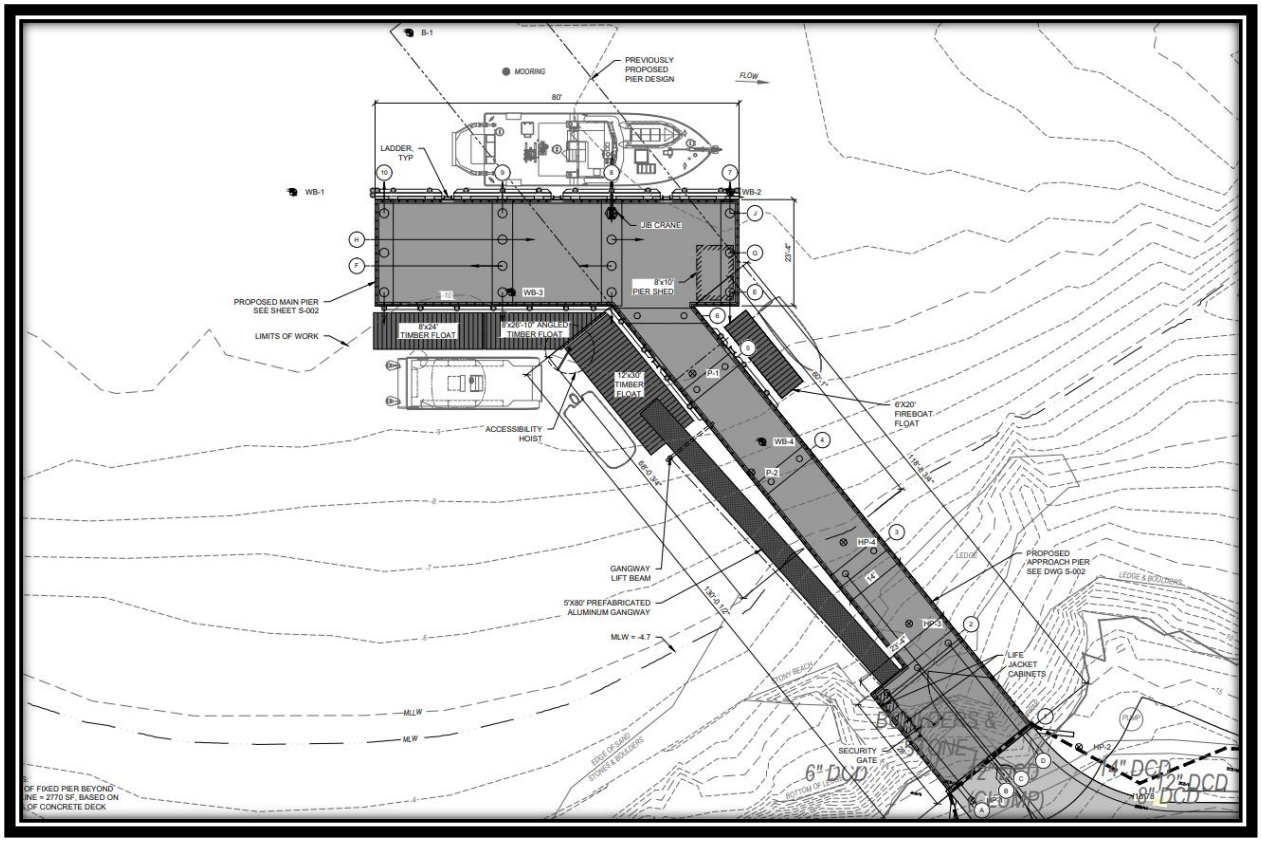

Marine Science Center Research Pier Detail

The proposed facility includes the following:

1. A pile supported pier structure extending from shore into the Saco River. The proposed pier includes an approximately 130-foot-long approach section extending from shore and an 80-foot-long pier head section oriented roughly parallel to the direction of flow in the river. The pier consists of a concrete superstructure on steel pipe piles, with timber fender piles for vessel berthing and floating docks, and a pile supported gangway lifting beam to allow the gangway ramp to be temporarily removed from the water. Site 7 (Preferred) Stormwater Management Report UNE Marine Science Center Pier September 2023, Revision B. April 2025 GEI Consultants, Inc.

2. A floating dock system consisting of one 8-foot by 24-foot float, one 8-foot by 26- foot 10-inch float, and one 12-foot by 30-foot gangway landing float to provide alltide vessel access for UNE's vessels on the west side of the pier, and a single 6-foot by 20-foot floating dock to provide a tie-up location for the City of Biddeford Fire Boat on the east side of the pier.

3. An 80-foot by 5-foot gangway, to provide ADA compliant access to the float system.

4. An upland access road connecting the existing road at the MSC to the proposed pier, including associated site grading, drainage, and stormwater management features.

RE: Case # 2024.34 Final Plan Review – Site Plan and Shoreland Zoning Review for the University of New England (UNE) / Proposed Construction of a Marine Science Center Research Pier to be located at 11 Hills Beach Road (Map #52, Lot 4) located in the City's Institutional (IN) Zoning District.

MEETING DATE: August 6, 2025, at 6:00 PM

These proposed improvements will result in a total increase in the impervious area totaling 0.249 acres. The increase in the impervious area will be managed by the two bioretention filter cells to the north of the Girard Marine Science Center. Runoff will be conveyed to the bioretention filter cells via proposed vegetated swales along the low side of the superelevated access road. The bioretention filter cells will slowly release captured stormwater via underground pipe into the Saco River/Atlantic Ocean.

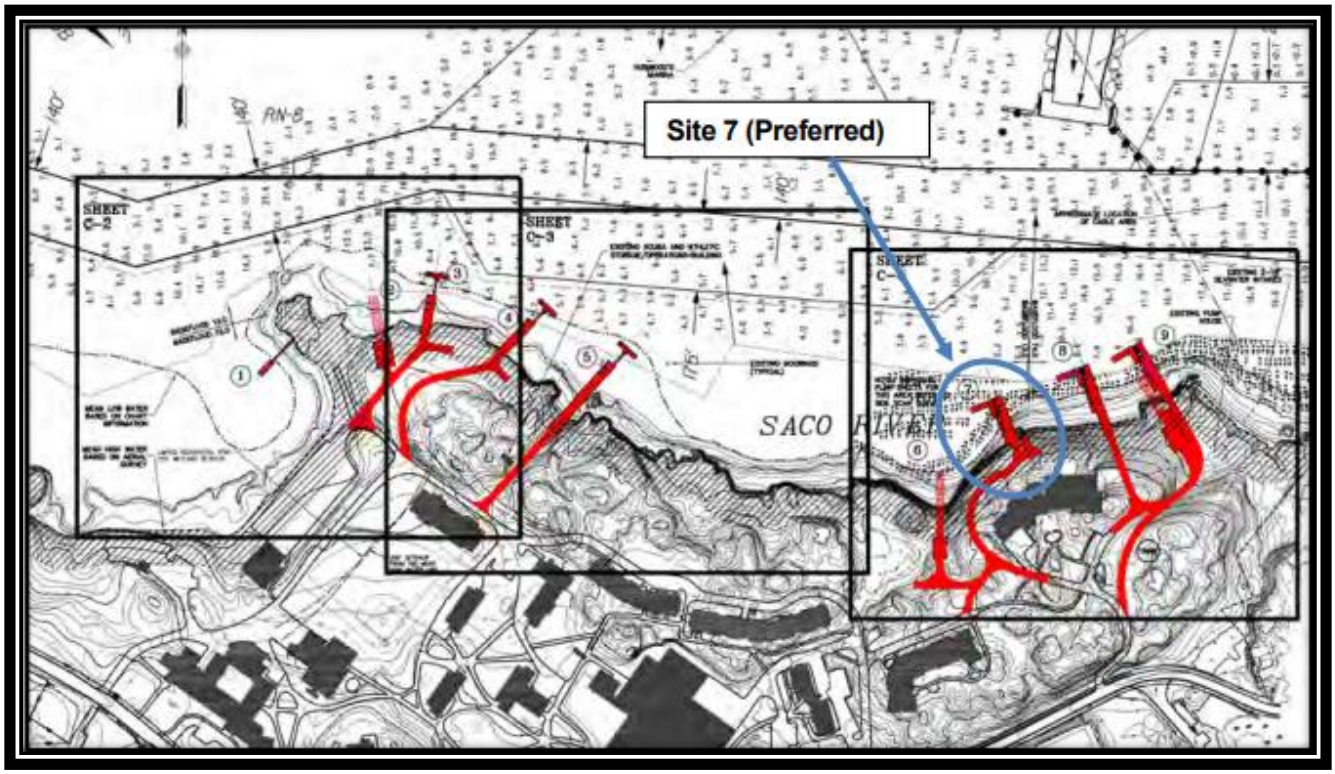

Fig. 1 – Alternative Sites Evaluated in 2008-2010 Study

As outlined in their project narrative, multiple locations for the pier were evaluated Alternative locations *"for more than 10 years and has gone through extensive planning and alternatives analysis in arriving at the design that is proposed"*.

The University's consultants (Daniel Bannon, P.E., CFM and Barney Baker, P.E. of GEI Consultants) evaluated alternate pier locations and concluded that:

> *"GEI has reviewed the concerns raised by the Saco and Biddeford Harbormasters and evaluated their impact on the proposed design, reviewed the history of planning that led to the current design location and layout, and reviewed the potential advantages and disadvantages offered by the suggested alternative pier location. <u>While we respectfully value the input and suggestions for an alternative layout, it is our opinion that the proposed design represents the preferred balance of project requirements and site constraints. Compared to the suggested alternative, the proposed design achieves adequate water depth, provides safe navigation, results in a structure of smaller overall dimensions with less coastal wetland impact, does not appear to be subject to significant sediment deposition, and locates the pier in a location that is</u>*

*less exposed to current and icing impacts. For these reasons, GEI recommends that the current design and pier location be maintained" (*Note: Emphasis added).*

After completing the pier feasibility study and identifying Site 7 as the preferred pier location, UNE undertook additional effort in 2015-2016 to study alternative pier layouts that would address the functional and vessel needs of the marine science curriculum as well as the site exposure, berthing conditions, access requirements, and associated site impacts. During this work, numerous alternative pier layouts were considered. Alternate locations evaluated water depth, exposure to currents, location relative to river sediment deposition, exposure to icing, and impacts to moorings.

3. PROJECT DATA/INFORMATION

1.	Applicant:	University of New England 11 Hills Beach Road Biddeford, ME
2.	Owner of Property:	University of New England 11 Hills Beach Road Biddeford, ME
3.	Agent:	Tom Saucier, P.E. Site Design Associates 23 Whitney Way Topsham, ME 04086
4.	Surveyor:	Tom Saucier, P.E. Site Design Associates 23 Whitney Way Topsham, ME 04086
5.	Project Location:	11 Hills Beach Road
6.	Project Tax Map #/Lot #:	Tax Map 52 Lot 4
7.	Lot Size:	49.9-acres
8.	Base Zoning:	Institutional (IN)
9.	Overlay Zoning:	Shoreland Zoning
10.	Existing Use:	Saco River
11.	Proposed Use:	Marine Research Pier
12.	Approvals Required:	Site Plan and Shoreland Review
13.	Uses in the Vicinity:	University
14.	Waivers Requested:	E. **Article XI.II. Section 5.B.1.a.** (post development runoff) F. **Article XI.II. Section 5.B.1.e.3.** (Slopes steeper than 2:1 in ledge). G. **Article VI. Section 26.F.: (**cut or fill slopes that exceed 3 horizontals to 1 vertical). H. **Article XIV. Section 15.H.4. (**Road and driveway banks shall be no steeper than a slope of 2 horizontal to 1 vertical).

18.	Waivers Granted on July 16, 2025.	A. **Article XI.II. Section 5.B.1.a.** (post development runoff) B. **Article XI.II. Section 5.B.1.e.3.** (Slopes steeper than 2:1 in ledge). C. **Article VI. Section 26.F.: (**cut or fill slopes that exceed 3 horizontals to 1 vertical). D. **Article XIV. Section 15.H.4. (**Road and driveway banks shall be no steeper than a slope of 2 horizontal to 1 vertical).
22.	Other Non-City Permits Required:	N/A
23.	LDR Attachment A: Fees Paid:	Yes
25.	Planning Board Review History: Sketch Plan Review - May 21, 2025; Site Walk June 9, 2025; Preliminary Review (Tabled)- June 18, 2025; Site Walk #2 – July 9, 2025; Preliminary Review (#2) – July 16, 2025 – Preliminary Approval and Waivers approved. Final Plan Review – August 6, 2025.	

4. REVIEW PROCESS

Per City ordinance, this application is subject to Site Plan (Land Development Regulations, Article XI) review and Shoreland Zoning approval by the Planning Board. Below is a list of required agency reviews.

- Saco River Corridor Commission (SRCC) – Approval 9-13-2024 Attached pages # 282-287 of the Applicants application.
- Department of Environmental Protection (MDEP), Findings of Fact (FOF) and Order Pages # 288-295, dated April 11, 2025, of the Applicants application.
- U.S. Army Corps of Engineers, New England District, approval dated March 28, 2025. Pages # 296-298 of the Applicants application.
- Maine Historic Preservation Commission, Approval dated May 15, 2023.
- City of Biddeford letter from Former City Manager (James Bennett) regarding a "Notice to Proceed with External Reviews" / compliance with City Code 74-35, subsections (c) items 1-10, dated August 19, 2025, Pages #302-303 of the Applicants application.

5. SITE PLAN APPROVAL / SITE DESIGN CRITERIA:

Below are the specific Site Review Criteria from the City of Biddeford's Code of Ordinances, Part III Land Development Regulations - Article XI Site Plan Review - Section 5 Site design and development criteria:

Site design criteria. The design standards presented here are minimum in nature; the applicant may provide further details to the presented plan. At the same time, some of these standards may not apply to a specific project; the applicant may request in writing waivers from any point following. All waivers must be added as notes to the approved plan and shall be considered conditions of approval.

Besides, the following standards projects presented under this article shall be subject to the performance standards specified in Article VI of this ordinance (Note: Article VI does not contain any additional performance standards for "piers or docks").

1. Drainage.
   a. The rate of post-development runoff shall not exceed that of predevelopment. Details of catch basins, drainage pipes and retention/detention ponds shall be provided as needed with the application. All detail sheets shall bear the seal and signature of a professional engineer, licensed in the State of Maine.

   b. A written engineering report describing the impacted watershed area, projected runoff, and any projected downstream impact shall be required.

   c. Drainage easements shall be established for any concentrated off-site drainage. Such easement shall state who has the responsibility to maintain the easement. Easement documents shall be reviewed, at applicant expense, by the Director of Public Works, City Engineer, and the City Solicitor, as to exactness of content. Plans shall include the location of easements.

   d. Where it is determined by the City Engineer or consultant hired by the Board, that the additional runoff incident to the development of the projected site will overload an existing downstream drainage facility, the Board may require the provision of water-retarding facilities or other improvements to alleviate said problem.

   e. Development in specific areas of concern shall provide detailed information and address specific issues in relation to drainage:

1. Parcels situated within the federally designated flood hazard zone, as per Flood Hazard Boundary Map H01-18, dated May, 1984, as amended, shall comply with all applicable federal regulations relating thereto.

2. One-hundred-year flood elevation line shall be included where applicable.

3. No slope shall be created which results in a slope of more than two feet horizontal to one foot vertical unless proper retaining walls are proposed.

f. Drainage improvements shall be scheduled to be constructed as part of the first portion of any project where drainage improvements are proposed.

g. Special bonding of 1 1/2 times the anticipated cost of said improvements shall be incorporated by the developer to insure that improvements are placed and that they function as planned. No portion of this special bond may be released until the project, or that portion of the project for which the drainage improvement is proposed has been constructed, and until so released by the Planning Board, with the recommendation from the Director of Public Works and the City Engineer.

Applicants' Comments: *A Stormwater Management Report is attached. The report submitted demonstrates compliance with Maine Department of Environmental Protection (DEP) Basic and General standards. The project will include bioretention filters designed to DEP BMP standards for enhancement of stormwater runoff quality.*

Staff Comment: *The above standards have / are being met, as the project complies with the Maine Department of Environmental Protection (DEP) Basic and General standards and permits from the agency*.

2. Utilities.

a. All utilities, including electric, gas, water/sewer, shall be shown on the plat, and separate detail sheets as needed.

b. Accessways, storage, and parking areas shall be graded and improved with pavements, curbs, gutters, sidewalks, storm drainage facilities, outdoor lighting, etc.

c. All accessways/drives and service ways shall be of sufficient width and configuration to accommodate the prospective traffic and to afford satisfactory access to police, firefighting and other such service.

d. Any proposal within 200 feet of a public water or sewer line(s) must connect to system(s). Applicant must supply copies of letters from the environmental specialist of the City of Biddeford for sewer, and water company shall confirm details of connection and/or concerns.

e. Whether or not a municipal water system is proposed, the following items must be specified in application narrative and on plat:

1. Rated normal capacity and gallons per minute at prime use time.

2. Rated maximum capacity and gallons per minute at prime use time.

3. Residual pressure of proposed tap line.

f. Where nondomestic sanitary discharge (any discharge into the public sewer system containing other than normal household wastes) is anticipated, such effluent shall be identified and comply with any and all federal, state, and local laws, ordinances, rules, and regulations. Where any such laws, ordinances, rules and regulations may overlap or may be inconsistent, the more stringent shall apply.

g. Where public sanitary service is available, or where developers must extend such service, applicants must apply for and receive a discharge permit from the City Council of the City of Biddeford prior to approval by the Planning Board.

h. Where practicable, all electrical and telephone utilities shall be placed underground.

Staff Comment: *Power will be fed underground to the pier from the Girard Marine Science Center.* ***The proposed utilities address and meet this standard****.*

3. Parking.

a. A parking plan shall delineate the number of parking and delivery or loading spaces and the physical arrangement. Details of parking plan shall conform to the provisions of the off-street parking section of Article VI of this Zoning Ordinance.

b. No on-street parking, delivery or loading is permitted, except where specifically allowed by the Planning Board.

c. Whenever a use existing on the effective date of these regulations is changed thereafter to a new use, parking facilities and access shall be provided as required herein for such new uses.

d. In the case of multifamily projects the number of required parking spaces should be increased 5% to allow for visitor parking.

e. Parking lots shall be landscaped and/or screened to provide for a pleasing visual effect and blending in with the surrounding area.

f. Lots shall be illuminated for security purposes. The lighting shall be designed in such a way that off-site glare is minimized.

g. Adequate space shall be allowed for the accumulation of snow during the winter plowing months.

Staff Comment: *The Girard Marine Science Center provides adequate parking for the associated / "accessory structure (pier)" as the students and faculty of Science Center will be the same users of the proposed pier.* ***The application meets this standard****.*

4. Structural layout and design. All proposed structures or additions to existing structures shall address the following items:

a. Design of buildings.

1. Buildings shall be designed to blend harmoniously with the surrounding structures in the neighborhood. New structures should be designed so as to complement the style of the abutting

older structures. A photograph, architectural rendering or other representation of the proposed structure must accompany the application for site review.

2. In the I-3 Zone structures shall have a facade sheath in brick or other masonry finish. Other facade finishes may be used when it can be clearly shown to the board that such facing material will advance the City's intent to make the I-3 area a more attractive gateway to the City.

Staff Comment: *No buildings are being proposed with the exception of the small storage shed located on the proposed pier. The project is also not located within the I-3 area so brick and / or masonry standards do not apply.*

b. Setbacks. Proposed structures shall be set back from roadways, in conformance with requirements for the particular zone; and shall be set in such a way as to blend in harmoniously with buildings on abutting properties, and to allow for adequate landscaping of the front yard.

Staff Comment: *The research pier is sited in conformance with all setback requirements. The proposed pier meets all setbacks.*

c. Fire protection.

1. All proposed structures and additions to existing buildings must be designed to meet existing fire protection standards.

2. Fire hydrants and fire escapes must be clearly presented on plats.

3. Clear ways around buildings must be maintained to provide for 360° access to structures.

4. Areas in front of structures must be kept clear of parking spaces to allow for emergency access.

5. Buildings should be designed with internal sprinkler systems. This is particularly the case in terms of multifamily and industrial/warehousing structures, and structures that will be located in areas that are far or difficult to reach from fire stations.

6. In residential developments of 24 units or more, or buildings of 5,000 square feet or more, a central alarm system to the central fire station shall be installed, unless a negative recommendation, in writing, is received from the Fire Marshal.

7. In residential developments of 24 dwelling units or more, or office buildings with more than two separate establishments or places of business, a "knock box" shall be provided and indicated on plat. This box shall be in accordance with the specifications and standards as prescribed by the Fire Department of the City of Biddeford.

8. Whenever gas, either natural or propane or other type, is proposed to be used on-site, a separate external shutoff valve shall be provided for each building on the site. The valve location shall be indicated on the plat and approved in writing by the fire chief/fire marshal.

Staff Comment: *Based on input from the fire department, the road width was increased to 20 ft per NFPA standards. The turnaround meets the city required dimensional standards and has been modelled to accommodate fire apparatus. The only concern raised to date is the Fire Departments turn-around at the head of the pier. The Applicants have agreed that once constructed the BFD will bring their larges apparatus to the side to verify that the turn-around constructed meets the BFD needs. If the turn-around needs to be modified, the BFD will require minor adjustments to the turn-around to the satisfaction of the Fire Chief. A condition has been added to the recommended Conditions of Approval (COA).*

d. Landscaping.

1. All sites must be landscaped with vegetation that will act to:
   (a) Reduce the impact of lighting, vehicular and structural, on abutting properties;

   (b) Reduce the impact of proposed structures on the privacy of abutters;

   (c) Make the site more attractive to the average viewer.

2. Landscaping measures will be indicated on the plat by drawings and narrative note. The use of trees and shrubs for fencing and shading is strongly encouraged. Care must be taken to ensure that tree, etc., are placed in such a fashion that in time they will cause minimum impact on abutting properties and public roadways and travelways, particularly as they grow.

3. Whenever possible existing vegetation shall be preserved and incorporated into the landscaping scheme of the project.

4. Each proposal will include a detailed landscaping plan. This plan will include the location, type and size of existing mature trees (those trees over eight inches in diameter).

5. Particular attention should be paid to offsetting the visual impact of new structures in areas where there may be a stark contrast with the existing design trend of the neighborhood.

Staff Comment:

The revegetation plan has been developed to meet the City of Biddeford's Shoreland Zoning requirements as well as to preserve a visual buffer for the access drive to minimize visibility from the water to the greatest extent possible, while achieving the required clearing and considering functional requirements such as snow plowing at the turnaround. The revegetation plan also meets the requirements of the Saco River Corridor Commission (SRCC) who issued a permit for the project.

Staff Comment: *Revegetation Plan: The revegetation plan, drawing C-15, is intended to meet the city of Biddeford's shoreland zoning requirements.*
Details are as follows:

- *49 trees are being removed with 21 of those within the 50-foot HAT setback*
- *Approximately 5,850 SF of understory duff later and low growth vegetation (predominantly non-native invasive honeysuckle) is being disturbed within 50 feet of the HAT.*
- *5 tree species are proposed in approximate equal quantities with the evergreen trees located between the road shoulder grading and the top of embankment where they are anticipated to fit under the remaining mature forest canopy, and between existing trees and ledge. Field verification during construction will be required to ensure final plant locations are feasible if shallow ledge or significant remaining tree root stock is present.*
- *3 shrubs (2 evergreen and 1 deciduous) are proposed to plant at the toe of the road embankment as well as in areas around the turnaround where fitting larger trees will be challenging given limited space and the need to maintain an area for plowed snow.*
- *Deciduous trees are spread throughout the area.*
- *The bioretention cells will be filled with a mix of wet, drought and salt tolerant shrubs and perennials which are shown on the plan as a hatched area. The notes on the plan and drawing C-16 plant schedule describe the random pattern mixing of these plants throughout the bio retention cells.*
- *All other disturbed areas will be planted with a native roadside mix of perennial grasses and flowers. It is recommended that this area be mowed once a year in the fall to maintain the mix of plants. If mowed more often, it will revert to mostly lawn grasses. • Mature plant sizes are listed on the plant list to give a sense of the amount of screening that may occur over time.*
- *The applicants are proposing the removal of invasive plant species and a complete replanting of the disturbed areas with native Maine species which Staff believes meet the above standards*

***The proposed development meets these standards**.*

e. Service, storage and utility areas.

1. All service, storage, and utility areas shall be designed to the side or rear yard of a proposed or existing building or structure, and such areas shall be appropriately screened/buffered by walls, fences, earth berms, or vegetation.

2. Proposed utility elements shall be adequately screened; and, if producing sound, baffled upon Planning Board request.

3. Trash receptacles, dumpsters, storage sheds, etc., shall be shown on plat.

***Staff Comment:** The research pier includes a small storage shed for equipment associated with the pier. The pier storage is the only storage / service area. The proposed storage / utility areas are minimal in size but are large enough to accommodate the storage needs of pier related activities.*

f. Paving, parking, and storage areas.

1. No paving, parking, or storage shall be permitted within the required setback of any side or rear property line;

2. No paving, parking, or storage (except for entrances/exits) shall be permitted within 25 feet of any front property line. These unpaved nonparking or nonstorage areas shall be maintained as landscaped areas or open spaces.

***Staff Comment:** No parking is being planned for the proposed pier. This standard is not applicable.*

g. Handicapped accessibility.

1. Pedestrian walkways, entrances and exits designed for use by the handicapped shall be provided as required by any and all federal, state, or local laws, ordinances, rules and regulations or as requested by the Planning Board.

2. Handicapped parking spaces and accessways shall be indicated on plat whenever they are to be employed.

Staff Comment: *The proposed research pier is handicapped accessible. The project meets this standard.*

h. Loading facilities.

1. Loading facilities for new structures shall be designed to the rear or side of any and all proposed or existing building or structure.

2. Loading facilities shall be designed in accordance with the applicable federal, state, or local laws, ordinances, codes, rules and regulations and shall be off-street or accessible via a public street.

Staff Comment: *No loading areas are being proposed as part of the pier project. This standard does not apply.*

i. Parking, loading, and protective buffers.

1. All parking, loading and protective buffers shall be situated on the same tract or parcel of land as the primary use building or structure.

2. The maximum nonvegetated area of the land area being developed and reviewed shall be 75%.

3. Any parking or paving, including all access ways, egress ways, entrances and exits on streets for both pedestrian and vehicular use, shall not cover or occupy more than 30% of the land area being developed and reviewed and shall be included with the maximum nonvegetated area.

4. In all applications, a minimum of 25% of the land area being developed and reviewed shall remain in its natural state or shall be maintained as appropriately landscaped area.

5. All buildings or structures shall be sited in conformance with established setbacks of the particular zone. No building or structure may be built within the required side yard setback. The Planning Board may require greater setbacks in areas such as turnpikes, water bodies, railroads, etc.

6. All buffered or screened areas shall be densely planted with shrubs or trees which are respectively at least two or three feet high at the time of planting and are of a type which may be expected to form a year-round dense screen of at least five feet high within three years, provided that such screening shall not obstruct the view of oncoming traffic when entering or exiting the site. An additional cash bond to cover the cost of replacement of these plantings may be required. The term of the bond shall be equal to three years from the time of planting. At the end of the three years any unused portion of this security will be returned to the applicant along with accrued interest.

Staff Comment: *The proposed development does not include new parking areas. The non-vegetated area of the land being developed will be less than 75% and a minimum of 25% of the land area being developed either remains in its natural state or consists of landscape and lawn areas. New landscaping is being proposed in all areas being disturbed by the pier construction as discussed within this document and Applicants development plans. The project meets this standard.*

j. Open space.

1. In new residential developments: Open space shall be provided in the ratio of 1,000 square feet for each dwelling unit. This open space shall be identified as either a "green space" or as "recreational space."

2. Whenever practicable, open space in a residential development shall include a mixture of active and passive recreational opportunities to benefit the various residents of the project. Such opportunities would include, but are not limited to, ball and other playing fields, tennis courts, etc.
3. In large-scale projects hiking trails or nature paths are encouraged.

4. In projects that abut rivers or streams a public easement is encouraged, to provide access to a limited natural resource.

5. The plan shall reflect the natural capabilities of the site to support development. Buildings, lots, and support facilities will be clustered in those portions of the site that have the most suitable conditions for development. Environmentally sensitive areas, including but not limited to wetlands, steep slopes, floodplains, significant wildlife habitats, fisheries, scenic areas, habitat for rare and endangered plants and animals, unique natural communities and natural areas, and sand and gravel aquifers will be maintained and preserved to the maximum extent. The development shall include appropriate measures for protecting these resources, including but not limited to modification of the proposed design of the site, timing of construction, and limiting the extent of excavation.

Staff Comment: *The proposed development does not include any residential uses but has been designed around the natural environment. Areas of disturbance will be replanted with natural Maine species and graded to support the proposed pier and it's access. The project meets the above standards.*

k. External lighting.

1. All existing/proposed external lighting must be included on plat. Lighting will be described as needed.

2. Lighting shall be designed to provide adequate illumination on-site, especially in parking areas, walkways and structural entrances, and site entrance from roadways. At the same time all illumination will be designed to mitigate adverse impact on abutting properties and structures, and traffic.

Staff Comment: *An electrical site plan is included in the drawing set which shows the site lighting. Full cut off fixtures will be utilized, and lighting will be the minimum necessary for safety and functionality. The project meets these standards.*

l. Signs.

1. All proposed signs shall meet standards provided in Article VI of the Zoning Ordinance of the City of Biddeford.

2. Signs shall be indicated on plat.

3. A detail of sign design shall be submitted as part of the application for site review.

Staff Comment: *No new signage is being proposed for this project. Any proposed signs shall meet the City's Sign Ordinance.*

m. Historic and archaeological resources. If any portion of the site has been identified as containing historic or archaeological resources, the development shall include appropriate measures for protecting these resources, including but not limited to modification of the proposed design of the site, timing of construction, and limiting the extent of construction.

Staff Comment: *See attachment 10 for a letter from the Maine Historic Preservation Commission clearing the project. The proposed development meets this standard.*

6. **Shoreland Zoning Land Use Standards:** In addition to the Site Plan Approval / Site Design Criteria outlined above, the project is required to comply with the applicable standards of Article XIV. Section 15.C. which are listed below:

15 C. Piers, docks, wharfs, bridges and other structures and uses extending over or below the normal high-water line of a water body or within a wetland.

1. Except as provided in Section 15C11 and Section 15X7, no more than one pier, dock, wharf or similar structure extending or located below the normal high-water line of a water body or within a wetland is allowed on a single residential lot; except that when a single lot contains at least twice the minimum shore frontage as specified in Section 15A, a second structure may be allowed and may remain as long as the lot is not further divided.

Staff Comment: Standard not applicable

2. *Access from shore shall be developed on soils appropriate for such use and constructed so as to control erosion*.

Staff Comment: *Access from shore will be developed on soils appropriate for the use. A detailed erosion control plan has been prepared for the project. The proposal meets this standard.*

3. The location shall not interfere with existing developed or natural beach areas.

Staff Comment: *The proposal does not interfere with existing developed or natural beach areas. The application meets this standard.*

4. The facility shall be located so as to minimize adverse effects on fisheries.

Staff Comment: *The facility has been located to minimize adverse effects on fisheries. The plan was reviewed by the National Marine Fisheries Service. The application meets this standard.*

5. The facility shall be no larger in dimension than necessary to carry on with the activity and be consistent with the surrounding character and uses of the area. A temporary pier, dock, or wharf in non-tidal waters shall not be wider than six feet for non-commercial uses.

Applicant Comment: *The facility size is the minimum necessary to carry out current and future research activities and is consistent with the surrounding character and uses of the area, including the Camp Ellis pier on the opposite side of the river.*

Staff Comment: *The proposed project meets this standard.*

6. No new structure shall be built on, over or abutting a pier, wharf, dock or other structure extending beyond the normal high-water line of a water body or within a wetland unless the structure requires direct access to the water body or wetland as an operational necessity.

Staff Comment: *Standard not applicable*

7. New permanent piers and docks on nontidal waters shall not be permitted unless it is clearly demonstrated to the Planning Board that a temporary pier or dock is not feasible, and a permit has been obtained from the Department of Environmental Protection, pursuant to the Natural Resources Protection Act.

Staff Comment: *A temporary pier / dock at this location at this location is not feasible for the proposed use. The Applicant has obtained approval from the Department of Environmental Protection (DEP).*

8. No existing structures built on, over or abutting a pier, dock, wharf or other structure extending beyond the normal high-water line of a water body or within a wetland shall be converted to residential dwelling units in any district.

Staff Comment: *Standard not applicable*

9. Except in the General Development District, structures built on, over or abutting a pier, wharf, dock or other structure extending beyond the normal high-water line of a water body or within a wetland shall not exceed 20 feet in height above the pier, wharf, dock or other structure.

Staff Comment: *An 8 ft x 10 ft shed for storage of life jackets, tools, and research equipment is proposed on the pier, and is an operational necessity. The shed will not exceed 20 ft in height.* ***The proposal meets this standard.***

NOTE: Permanent structures projecting into or over water bodies shall require a permit from the Department of Environmental Protection pursuant to the Natural Resources Protection Act, Title 38 M.R.S.A., Section 480-C.

Staff Comment: *The Applicants have received approval for the proposed dock from the Maine Department of Environmental Protection (MDEP)*

10. *Vegetation may be removed in excess of the standards in Section 15P of this ordinance in order to conduct shoreline stabilization of an eroding shoreline, provided that a permit is obtained from the Planning Board. Construction equipment must access the shoreline by barge when feasible as determined by the Planning Board.*

Applicant Comments:

a. When necessary, the removal of trees and other vegetation to allow for construction equipment access to the stabilization site via land must be limited to no more than 12 feet in width. When the stabilization project is complete, the construction equipment accessway must be restored.

b. Revegetation must occur in accordance with Section 15S.

NOTE: A permit pursuant to the Natural Resource Protection Act is required by the Department of Environmental Protection for shoreline stabilization activities.

Staff Comment: *The applicant has submitted a detailed erosion control and revegetation plan for the project which adequately addresses erosion control and site revegetation standards.* ***The applicant meets these standards.***

11. A deck over a river may be exempted from the shoreland setback requirements if it is part of a downtown revitalization project that is defined in a project plan approved by the legislative body of the municipality, and may include the revitalization of structures formerly used as mills that do not meet the structure setback requirements, if the deck meets the following requirements:

Staff Comment: *The proposal is for a dock/pier, so the above standards related to "decks" are not applicable.* ***Standard not applicable****.*

8. FINDINGS OF FACT: The proposed project will need to meet the standards below at Final Board review:

1) The proposed use meets specific requirements set forth in this ordinance and would be in compliance with applicable state or federal laws;

2) The proposed use would not create fire safety hazards by providing adequate access to the site, or to the buildings on the site, for emergency vehicles and would not create hazards through the storage of chemicals and wastes;

3) The proposed exterior lighting, where allowed, would not create hazards for motorists traveling on adjacent public streets or is adequate for the safety of occupants or users of the site or would not damage the value and diminish the usability of adjacent properties;

4) The provisions for buffers and on-site landscaping provide adequate protection to neighboring properties from detrimental or unsightly features of the development;

5) The proposed use would not have a significant, detrimental effect on the use and peaceful enjoyment of abutting property as the result of noise, vibrations, fumes, odors, dust, glare, hours of operation, or other causes;

6) The provisions for vehicular loading and unloading and parking and for vehicular and pedestrian circulation on the site and onto adjacent public streets would not create hazards to public safety or traffic congestion;

7) The proposed use would generate a volume of traffic that can reasonably be accommodated by the existing road network, or would not create unreasonable traffic hazards or would not exacerbate an existing traffic hazard, or would not create unreasonable traffic congestion;

8) The proposed use would not have a significant, detrimental effect on the value of adjacent properties which could be avoided by reasonable modification of the proposal;

9) The proposed use would not have an adverse impact on the privacy of the residents of the immediate area (within 500 feet) which could be avoided by reasonable modification of the proposal;

10) The proposed use would be in compliance with Biddeford's Comprehensive Plan;

11) The proposed use would not have an adverse impact on the immediate neighborhood or the community relative to architectural design, scale, bulk and building height, identity and historical character, or visual integrity, which could be avoided by reasonable modification of the proposal;

12) The design of the site would not result in significant flood hazards or flood damage or would be in conformance with applicable flood hazard protection requirements;

13) Adequate provision has been made for the disposal of wastewater or solid waste or for the prevention of ground or surface water contamination;

14) Adequate provision has been made to control erosion or sedimentation;

15) Adequate provision has been made to handle stormwater runoff or other drainage problems on the site; and the proposed development will not unduly burden off-site surface water systems;

16) The proposed water supply would meet the demands of the proposed use for fire protection purposes;

17) Adequate provision has been made for the transportation, storage, and disposal of hazardous substances and materials as defined by state law;

18) The proposed use would not have an adverse impact on scenic vistas or on significant wildlife habitat or wetland areas and water bodies which could be avoided by reasonable modification of the proposal;

19) When located in the Shoreland Zone, the proposed use would meet the purposes of Shoreland Zoning as identified in Article XIV, Section 1 (Purposes) of this ordinance.

***Staff Comment**: In reviewing the application, Staff finds that the application satisfies the City's Shoreland Zoning Ordinance and Site Plan criteria.*

9. SAMPLE MOTIONS FOR SITE PLAN AND SHORELAND ZONE APPROVAL:

The Application before the Board is a "Preliminary Plan", so a formal vote is required.

A. Motion to Approve: I motion to APPROVE Case # 2024.34 Final Plan – Site Plan and Shoreland Zoning Review for the University of New England (UNE) / Proposed Construction of a Marine Science Center Research Pier to be located at 11 Hills Beach Road (Map #52, Lot 4) located in the City's Institutional (IN) Zoning District, with the adoption of the Findings of Fact (FOF) and recommended Conditions of Approval (COA).

B. Motion to Deny I motion to DENY Case # 2024.34 Final Plan – Site Plan and Shoreland Zoning Review for the University of New England (UNE) / Proposed Construction of a Marine Science Center Research Pier to be located at 11 Hills Beach Road (Map #52, Lot 4) located in the City's Institutional (IN) Zoning District, for the following reasons:

1)_____.

2)_____.

3)_____.

C. Motion to Table: I motion to TABLE Case # 2024.34 Final Plan – Site Plan and Shoreland Zoning Review for the University of New England (UNE) / Proposed Construction of a Marine Science Center Research Pier to be located at 11 Hills Beach Road (Map #52, Lot 4) located in the City's Institutional (IN) Zoning District, for the following reasons:

1) _____.

2) _____.

3) _____.

CITY OF BIDDEFORD

Planning and Development Department

David Galbraith
City Planner & Deputy Director of Planning & Development
205 Main Street
P.O. Box 586
Biddeford, ME 04005
(207) 284-9115
David.galbraith@biddefordmaine.org

FINDINGS OF FACT AND CONCLUSIONS OF LAW

Planning Board Case #2024.34
Final Plan Review – University of New England (UNE)
Site Plan and Shoreland Zoning Review
Proposed Construction of a Marine Science Center Research Pier
11 Hills Beach Road (Map #52, Lot 4) located in the City's Institutional (IN) Zoning District.
Date: August 6, 2025

Pursuant to the provisions of the City of Biddeford Code of Ordinances Land Development Regulations, Article XI (Site Plan Review), and Article XIV (Shoreland Zoning Ordinance), the Biddeford Planning Board has considered the application of Based on its review, including supportive data, public hearing testimony and related materials contained in the record, the Planning Board makes the following Findings of Fact and Conclusions of Law:

---

1. PROJECT DATA/INFORMATION

1.	Applicant:	University of New England 11 Hills Beach Road Biddeford, ME
2.	Owner of Property:	University of New England 11 Hills Beach Road Biddeford, ME
3.	Agent:	Tom Saucier, P.E. Site Design Associates 23 Whitney Way Topsham, ME 04086
4.	Surveyor:	Tom Saucier, P.E. Site Design Associates 23 Whitney Way Topsham, ME 04086
5.	Project Location:	11 Hills Beach Road
6.	Project Tax Map #/Lot #:	Tax Map 52 Lot 4
7.	Lot Size:	49.9-acres
8.	Base Zoning:	Institutional (IN)
9.	Overlay Zoning:	Shoreland Zoning
10.	Existing Use:	Saco River
11.	Proposed Use:	Marine Research Pier
12.	Approvals Required:	Site Plan and Shoreland Review
13.	Uses in the Vicinity:	University
14.	Waivers Requested:	A. **Article XI.II. Section 5.B.1.a.** (post development runoff) B. **Article XI.II. Section 5.B.1.e.3.** (Slopes steeper than 2:1 in ledge).

		C. **Article VI. Section 26.F.: (**cut or fill slopes that exceed 3 horizontals to 1 vertical). D. **Article XIV. Section 15.H.4. (**Road and driveway banks shall be no steeper than a slope of 2 horizontal to 1 vertical).
18.	Waivers Granted - July 16, 2025.	A. **Article XI.II. Section 5.B.1.a.** (post development runoff) B. **Article XI.II. Section 5.B.1.e.3.** (Slopes steeper than 2:1 in ledge). C. **Article VI. Section 26.F.: (**cut or fill slopes that exceed 3 horizontals to 1 vertical). D. **Article XIV. Section 15.H.4. (**Road and driveway banks shall be no steeper than a slope of 2 horizontal to 1 vertical).
22.	Other Non-City Permits Required:	N/A
23.	LDR Attachment A: Fees Paid:	Yes
25.	Planning Board Review History: Sketch Plan Review - May 21, 2025; Site Walk June 9, 2025; Preliminary Review (Tabled)- June 18, 2025; Site Walk #2 – July 9, 2025; Preliminary Review (#2) – July 16, 2025 – Preliminary Approval and Waivers approved. Final Plan Review – August 6, 2025.	

CONCLUSIONS OF LAW:

1. The proposed use meets specific requirements set forth in this ordinance and would be in compliance with applicable state or federal laws;

2. The proposed use would not create fire safety hazards by providing adequate access to the site, or to the buildings on the site, for emergency vehicles and would not create hazards through the storage of chemicals and wastes;

3. The proposed exterior lighting, where allowed, would not create hazards to motorists traveling on adjacent public streets or is adequate for the safety of occupants or users of the site or would not damage the value and diminish the usability of adjacent properties;

4. The provisions for buffers and on-site landscaping provide adequate protection to neighboring properties from detrimental or unsightly features of the development;

5. The proposed use would not have a significant, detrimental effect on the use and peaceful enjoyment of abutting property as the result of noise, vibrations, fumes, odor, dust, glare, hours of operation, or other causes;

6. The provisions for vehicular loading and unloading and parking and for vehicular and pedestrian circulation on the site and onto adjacent public streets would not create hazards to public safety or traffic congestion;

7. The proposed use would generate a volume of traffic that can reasonably be accommodated by the existing road network, or would not create unreasonable traffic hazards or would not exacerbate an existing traffic hazard, or would not create unreasonable traffic congestion;

8. The proposed use would not have a significant, detrimental effect on the value of adjacent properties which could be avoided by reasonable modification of the proposal;

9. The proposed use would not have an adverse impact on the privacy of the residents of the immediate area (within 500 feet) which could be avoided by reasonable modification of the proposal;

10. The proposed use would be in compliance with Biddeford's Comprehensive Plan;

11. The proposed use would not have an adverse impact on the immediate neighborhood or the community relative to architectural design, scale, bulk and building height, identity and historical character, or visual integrity, which could be avoided by reasonable modification of the proposal;

12. The design of the site would not result in significant flood hazards or flood damage or would be in conformance with applicable flood hazard protection requirements;

13. Adequate provision has been made for disposal of wastewater or solid waste or for the prevention of ground or surface water contamination;

14. Adequate provision has been made to control erosion or sedimentation;

15. Adequate provision has been made to handle stormwater runoff or other drainage problems on the site; and the proposed development will not unduly burden off-site surface water systems;

16. The proposed water supply would meet the demands of the proposed use for fire protection purposes;

17. Adequate provision has been made for the transportation, storage, and disposal of hazardous substances and materials as defined by state law;

18. The proposed use would not have an adverse impact on scenic vistas or on significant wildlife habitat or wetland areas and water bodies which could be avoided by reasonable modification of the proposal;

19. When located in the Shoreland Zone, the proposed use would meet the purposes of Shoreland Zoning as identified in Article XIV, Section 1 (Purposes) of this ordinance.

APPROVAL GRANTED:

Based on the evidence available and the conclusions above, the Biddeford Planning Board approves the proposed project summarized within the attached Staff report and pursuant to the provisions of the City of Biddeford Code of Ordinances Land Development Regulations, Article XI (Site Plan Review), and Article XIV (Shoreland Zoning), the Biddeford Planning Board has approved the application # 2024.34 Final Plan Review – Site Plan and Shoreland Zoning Review for the University of New England (UNE) / Proposed Construction of a Marine Science Center Research Pier to be located at 11 Hills Beach Road (Map #52, Lot 4) located in the City's Institutional (IN) Zoning District, with the attached Findings of Fact (FOF) with the following Conditions of Approval (COA):

1. The material provided for the proposed project has been reviewed only for general conformance to the City technical requirements. The applicant(s) and/or their technical consultant shall be responsible for the actual design details and completeness of their work. It is incumbent upon the applicant(s) to ensure that the project is in conformance and complies with all City Codes, ordinances and regulations as well as with all state regulations, including, but not limited to, space and bulk standards, performance standards, use standards and other zoning type requirements.

2. Standard Conditions of Approval apply.

3. Modifications to Approved Development Plans: The project shall be constructed in accordance with the approved development plans. No deviations to the approved development plans shall be made without prior written authorization by the City Planner. Should the Applicants desire a modification from approved plans, they shall be required to submit a formal letter requesting a "minor modification" to the approved development plans. The narrative shall be submitted outlining the request, the reasoning for the request (justification) and shall include plans illustrating the approved plans and proposed modifications. Changes beyond the authority of the City Planner shall be reviewed and approved by the Planning Board. It should be noted that review fees for any proposed changes may be assessed to the Applicant, for Staff or Peer Review time spent evaluating the request.

4. A Letter of Credit or other surety acceptable to the City of Biddeford shall be submitted prior to the issuance of permits or site work being initiated. The financial guarantee shall be established for 150% of the cost of the following improvements:
   a. Landscaping
   b. Paving
   c. Work within ROW (existing or proposed)
   d. Stormwater Drainage
   e. Loam & seed
   f. Sediment & erosion control
   g. As-Built Plans
   h. Property Monuments

5. Prior to any ground disturbance, the applicant shall establish a construction inspection account equal to: $2,500.00.

6. Prior to any ground disturbance, a pre-construction meeting with the owner/applicant, contractor, and City is required. Contact the Engineering Department to schedule this meeting.

7. Contact the Department of Public Works for driveway location permits, curb cut permits and/or street opening permits prior to the start of construction.

8. An as-built plan must be provided to the City of Biddeford Engineering Office at the end of the project electronically, which can be read by the City of Biddeford's Geographic Information System software. Note: Any modifications to the Planning Board approved development plans shall be reviewed and approved by the City Planner prior to being made, including any "field changes".

9. The applicant shall incorporate appropriate erosion control measures into this project to reduce erosion effects from the work. All disturbed areas must be re-vegetated and/or otherwise stabilized at the appropriate stage of the work per Maine DEP standards in the Best Management Practice (BMP) manual.

10. That the Article VI Performance Standards requirements regarding Dust, Fumes, Vapors & Gases (sect 25), Explosive Materials (sect 28), Glare (sect 37), Noise (sect 48) be followed.

11. The applicant shall obtain all other pertinent local, state and federal permits, licenses, and insurance such as blasting, building, electrical, plumbing, etc. prior to commencing business.

12. At the completion of the project the owner/applicant shall request a final inspection. This request shall be directed to the Engineering Department. Performance guarantees and remaining escrow accounts shall not be released until the Planning Office certifies that the project has been completed and is in compliance with the approved development plans and all applicable City Ordinances.

13. The applicant shall submit approved plans for signature of the City's Planning Board, which shall be recorded in the York County Registry of Deeds. An electronic copy of the recorded plan shall be sent to the Planning Office.

14. Once stamped and signed "As-Built drawings" are submitted to the Planning and Engineering Departments (clearly identifying what approved deviations and variances were installed based on the approved permit drawings), the City Engineering Department will conduct an inspection. **The "as Built Checklist" shall be submitted for review and approval, for any performance guarantee release.**

15. As-Built Drawings and CAD Files need to be submitted to the Planning & Engineering Departments **prior to a 'Site Punch list Inspection' and any bond release.**

16. York County Recorded Drawings: Applicant must submit recorded copies of York County Registry of Deed drawings to Planning & Engineering Department **prior to Building Permit Issuance.**

17. As agreed during the public hearing process, the University of New England (UNE) shall be responsible for the reasonable costs, as applicable, for the relocation of all impacted moorings displaced by the construction of the UNE research pier.

18. Fire Department Requirements:

    A. The Applicant shall schedule an on-site inspection with the Biddeford Fire Chief to verify that the emergency vehicle turn-around can accommodate the largest vehicle in their fleet to the Department's satisfaction. Any necessary modifications shall be coordinated with the City Planner and constructed to the Fire Chief's satisfaction.

_____
Alexa Plotkin Planning Board Chair

_____
Date

APPLICATION FOR MAINE
DEPT OF ENVIRONMENTAL PROTECTION
NATURAL RESOURCES PROTECTION ACT
AND
ARMY CORPS OF ENGINEERS PERMITS
FOR
RESEARCH PIER AND FLOATS

Applicant:

UNIVERSITY OF NEW ENGLAND
11 HILLS BEACH ROAD
BIDDEFORD, MAINE 04005

June 17, 2024

Prepared by:

Site Design Associates
23 Whitney Way
Topsham, Maine 04086
Ph: 207-449-4275
Email: info@sitedesignassociates.biz

TABLE OF CONTENTS

APPLICATION FOR
MAINE DEPARTMENT OF ENVIRONMENTAL PROTECTION
NATURAL RESOURCES PROTECTION ACT
AND
ARMY CORPS OF ENGINEERS PERMIT

NRPA Permit Application Form

Letter of Agent Authorization

Deed

Attachment 1:	Activity Description
Attachment 2:	Alternatives Analysis
Attachment 3:	Location Map
Attachment 4:	Photos
Attachments 5/6:	Plans
Attachment 7:	Construction Plan
Attachment 8:	Erosion Control Plan
Attachment 9:	Wetland Delineation Report/Coastal Wetland Characterization Appendix B
Attachment 10:	Notice of Intent to File
Attachment 11:	MHPC and TRIBE Correspondence
Attachment 12:	MDEP Visual Evaluation Field Survey Checklist Appendix A
Attachment 13:	Appendix D – Project Description Worksheet
Attachment 14:	Species List, MA Consistency Letter, and Correspondence with USFW regarding the Northern Long-eared Bat.
Attachment 15:	Abutter Notifications

Department of Environmental Protection
Bureau of Land & Water Quality
17 State House Station
Augusta, Maine 04333
Telephone: 207-287-7688

FOR DEP USE
ATS #_____
L- _____
Total Fees: _____
Date: Received _____

APPLICATION FOR A NATURAL RESOURCES PROTECTION ACT PERMIT

➔**PLEASE TYPE OR PRINT IN *BLACK INK ONLY***

1. Name of Applicant:	University of New England,. Andrew Philippe	**5.Name of Agent:**	Tom Saucier, Site Design Associates
2. Applicant's Mailing Address:	11 Hills Beach Road	**6. Agent's Mailing Address:**	23 Whitney Way Topsham, Maine 04086
3. Applicant's Daytime Phone #:	602-2365	**7. Agent's Daytime Phone #:**	207-449-4275
4. Applicant's Email Address (Required from *either* applicant or agent):	aphilippe@une.edu	**8. Agent's Email Address:**	tsaucier@sitedesignassociates.biz

9. Location of Activity: (Nearest Road, Street, Rt.#)	11 Hills Beach Road	**10. Town:**	Biddeford	**11. County:**	York

12. Type of Resource: (Check all that apply)
- ❑ River, stream or brook
- ❑ Great Pond
- ■ Coastal Wetland
- ❑ Freshwater Wetland
- ❑ Wetland Special Significance
- ❑ Significant Wildlife Habitat
- ❑ Fragile Mountain

13. Name of Resource: Saco River

14. Amount of Impact: (Sq.Ft.)
Fill: 84 sf
Dredging/Veg Removal/Other: NA

15. Type of Wetland: (Check all that apply)
- ❑ Forested
- ❑ Scrub Shrub
- ❑ Emergent
- ❑ Wet Meadow
- ❑ Peatland
- ❑ Open Water
- ■ Other Ledge and soil below HAT

FOR FRESHWATER WETLANDS

Tier 1	*Tier 2*	*Tier 3*
❑ 0 - 4,999 sq ft. ❑ 5,000-9,999 sq ft ❑ 10,000-14,999 sq ft	❑ 15,000 – 43,560 sq. ft.	❑ > 43,560 sq. ft. or ■ smaller than 43,560 sq. ft., not eligible for Tier 1

16. Brief Activity Description: Construction of a research pier, floats, and gangway. See plans and narratives.

17. Size of Lot or Parcel & UTM Locations: ☐ _____square feet, or ☑ 8.6 acres UTM Northing: _____ UTM Easting: _____

18. Title, Right or Interest: ■ own ❑ lease ❑ purchase option ❑ written agreement

19. Deed Reference Numbers:	Book#: 1484 Page: 0145	**20. Map and Lot Numbers:**	Map #: 52	Lot #: 4	
21. DEP Staff Previously Contacted:	Alison Sirois	**22. Part of a larger project:**	❑ Yes ■ No	**After-the-Fact:**	❑ Yes ■ No
23. Resubmission of Application?:	❑ Yes➔ ■ No	**If yes, previous application #**		**Previous project manager:**	
24. Written Notice of Violation?:	❑ Yes ➔ ■ No	**If yes, name of DEP enforcement staff involved:**		**25. Previous Wetland Alteration:**	❑ Yes ■ No

26. Detailed Directions to the Project Site: Route 9 from Biddeford to Hills Beach Road. Proceed on Hills Beach Road for 0.7 miles to the Girard Science center. Drive will be on the left.

27.

TIER 1	**TIER 2/3 AND INDIVIDUAL PERMITS**	
❒ Title, right or interest documentation	■ Title, right or interest documentation	■ Erosion Control/Construction Plan
❒ Topographic Map	■ Topographic Map	❒ Functional Assessment (Attachment 3), if required
❒ Narrative Project Description	■ Copy of Public Notice/Public Information Meeting Documentation	❒ Compensation Plan (Attachment 4), if required
❒ Plan or Drawing (8 1/2" x 11")	■ Wetlands Delineation Report (Attachment 1) that contains the Information listed under Site Conditions	■ Appendix A and others, if required
❒ Photos of Area	■ Alternatives Analysis (Attachment 2) including description of how wetland impacts were Avoided/Minimized	■ Statement/Copy of cover letter to MHPC
❒ Statement of Avoidance & Minimization		❒ Description of Previously Mined Peatland, if required
❒ Statement/Copy of cover letter to MHPC		

28. FEES Amount Enclosed: $611 paid on line

CERTIFICATIONS AND SIGNATURES LOCATED ON PAGE 2

IMPORTANT: IF THE SIGNATURE BELOW IS NOT THE APPLICANT'S SIGNATURE, ATTACH LETTER OF AGENT AUTHORIZATION SIGNED BY THE APPLICANT.

By signing below the applicant (or authorized agent), certifies that he or she has read and understood the following :

DEP SIGNATORY REQUIREMENT

PRIVACY ACT STATEMENT

Authority: 33 USC 401, Section 10; 1413, Section 404. Principal Purpose: These laws require permits authorizing activities in or affecting navigable waters of the United States, the discharge of dredged or fill material into waters of the United States, and the transportation of dredged material for the purpose of dumping it into ocean waters. Disclosure: Disclosure of requested information is voluntary. If information is not provided, however, the permit application cannot be processed nor a permit be issued.

CORPS SIGNATORY REQUIREMENT

USC Section 1001 provides that: Whoever, in any manner within the jurisdiction of any department or agency of the United States knowingly and willfully falsifies, conceals, or covers up any trick, scheme, or disguises a material fact or makes any false, fictitious or fraudulent statements or representations or makes or uses any false writing or document knowing same to contain any false, fictitious or fraudulent statements or entry shall be fines not more than $10,000 or imprisoned not more than five years or both. I authorize the Corps to enter the property that is subject to this application, at reasonable hours, including buildings, structures or conveyances on the property, to determine the accuracy of any information provided herein.

DEP SIGNATORY REQUIREMENT

"I certify under penalty of law that I have personally examined the information submitted in this document and all attachments thereto and that, based on my inquiry of those individuals immediately responsible for obtaining the information, I believe the information is true, accurate, and complete. I authorize the Department to enter the property that is the subject of this application, at reasonable hours, including buildings, structures or conveyances on the property, to determine the accuracy of any information provided herein. I am aware that there are significant penalties for submitting false information, including the possibility of fine and imprisonment.

Further, I hereby authorize the DEP to send me an electronically signed decision on the license I am applying for with this application by emailing the decision to the address located on the front page of this application (see #4 for the applicant and #8 for the agent)."

SIGNATURE OF AGENT/APPLICANT

Date: 4/11/24

NOTE: Any changes in activity plans must be submitted to the DEP and the Corps in writing and must be approved by both agencies prior to implementation. Failure to do so may result in enforcement action and/or the removal of the unapproved changes to the activity.

(pink)

State of Maine DEP Payment Receipt

Contact Inform Thomas Saucier - 23 Whitney Way, Topsham, ME, 04086

(207) 449-4275

tsaucier@sitedesignassociates.biz

Product	Reference Number	Customer Number	Payment Amount	Comments
Natural Resources Protection Act (Individual Permit)	New Application		$651.00	Processing and licensing fee

Receipt ID: 5822

Transaction Date: 6/17/2024 4:06:45 PM

Transaction Summary

Payment	$651.00
Service Fe	$2.00
Total	**$653.00**

Thank you for your successful transaction.

If you have questions or concerns, please call (207) 287-7688

or Email: Payments.DEP@maine.gov

Print

UNIVERSITY OF NEW ENGLAND

Biddeford Campus
11 Hills Beach Road
Biddeford, ME 04005
(207) 283-0171 T

Portland Campus
716 Stevens Avenue
Portland, ME 04103
(207) 797-7261 T

May 29, 2023

Mr. Tom Saucier
Site Design Associates
23 Whitney Way
Topsham, Maine 04086

TO WHOM IT MAY CONCERN:

This letter authorizes Tom Saucier, Site Design Associates, to serve as an agent for University of New England for the purpose of permitting the proposed installation of a pier and float, on its Biddeford campus.

Sincerely,

Alan Thibeault
Vice president for University Operations

Excepting and reserving, however, from the last parcel described a small triangular parcel of land in the rear of the premises of Charles E. Roberts which triangular lot has a base of about 50 feet in length which is an extension of the northwesterly boundary of said Roberts lot; and has an altitude of about 100 feet in length which is the northeasterly side thereof and is located in the center of a ditch long supposed to be the rear line of the Roberts lot; and which has a hypotenuse which is coincident with the rear line of said Roberts lot and is the southerly side of said triangule, being the same premises conveyed by Blanche T. Beuscher and Olga M. DeHaven to the said Kenneth A. Littlefield and Barbara A. Littlefield, by their deed of mortgage dated on the twentieth (20) day of February 1958 and recorded in York Registry of Deeds, Book 1354, Page 447, but described under the aforementioned reference only as three certain lots or parcels of land, with buildings thereon, and mentioned as being the same premises conveyed on February 20th, 1958, by Kenneth A. and Barbara A. Littlefield to Blance T. Beuscher and Olga M. DeHaven, by Warranty Deed, Recorded Book 1362, Page 112; and that such entry was made and possession taken as aforesaid, for the avowed purpose of foreclosing said mortgage, because of a breach of the condition thereof.

Raymond E. Mealey

Madeline C. Mealey

STATE OF MAINE

COUNTY OF YORK, SS March 24, 1962 Signed and sworn to by the said Raymond E. Mealey and Madeline C. Mealey,

Before me. Maurice L. Shibles Notary Public (L.S.)
My Commission Expires Sept. 2, 1966

Recorded according to the original received April 6, 1962 at 11h. 58m. A. M. EL

KNOW ALL MEN BY THESE PRESENTS, THAT, COUVENT de la PRESENTATION de MARIE, a corporation organized and existing under the laws of the State of Maine and located at Biddeford, in the County of York and said State of Maine, in consideration of One Hundred Fifty Thousand Dollars ($150,000.00) paid by THE FRANCISCAN FATHERS OF MAINE, a corporation duly organized by law and having an established place of business at 605 Pool Road, in said Biddeford, the receipt whereof it does hereby acknowledge, does hereby give, grant, bargain, sell and convey, unto the said The Franciscan Fathers of Maine, its successors or assigns, forever, the following described property: I.R.S. One Hundred and Sixty Five Dollars

Parcel 1

A certain lot or parcel of land, with the buildings thereon, situated in

said Biddeford and bounded and described as follows:

BEGINNING at a point on the Northerly side of the Hill's Beach Road, so-called, in said Biddeford, said point being the Westerly corner of the land herein conveyed and being in the Southerly line of land formerly of one Finney and now of Couvent de la Presentation de Marie, and being marked by an iron stake driven into the ground; thence South eighty-two degrees eight minutes East (S 82° 08' E) two hundred fourteen and forty-six one-hundredths (214.46) feet by said Hill's Beach Road to an iron stake driven into the ground; thence North eighty-one degrees forty-two minutes East (N 81° 42' E) five hundred forty-five and five one-hundredths (545.05) feet by said Hill's Beach Road to an iron stake driven into the ground; thence South fifty degrees thirty-five minutes East (S 50° 35' E) two hundred thirty-eight and forty-seven one-hundredths (238.47) feet by said Hill's Beach Road to an iron stake driven into the ground and other land of this Grantor; thence North eighty-six degrees twenty-seven minutes East (N 86° 27' E) sixteen and ninety-one one-hundredths (16.91) feet by said other land of this Grantor to a drill hole into the ledge and land now or formerly of John J. Traynor; thence North three degrees thirty-three minutes West (N 3° 33' W) one hundred thirty-three and five tenths (133.5) feet by said land of John J. Traynor, land now or formerly of one Michael Reddy and a reserved street as shown on a plan of land of William A. Chadbourne, drawn by Z. G. Staples, July 14, 1874, and recorded in York County Registry of Deeds in Plan Book 2, Page 40, and by the stone wall to an iron stake driven into the ground at the Southwesterly corner of land now or formerly of William Libby; thence North twenty-two degrees forty-one minutes West (N 22° 41' W) one hundred twenty-eight and one-half (128½) feet by said land of William Libby, other land of this Grantor and by the stone wall to an angle in said stone wall; thence North fifty-five degrees fifty-seven minutes East (N 55° 57' E) three hundred ninety-three and nineteen one-hundredths (393.19) feet by said other land of this Grantor, by a reserved street as shown on said plan, and land now or formerly of Thomas Gallagher and by the fence and wall to an iron stake driven into the ground at the top of the bank; thence this same course to Saco River; thence Northerly, Northwesterly and Westerly by said River to an iron stake driven into the ground at a point of ledge and to said other land of this Grantor; thence South forty-one degrees East (S 41° E) three hundred thirty-nine and seven tenths (339.7) feet to an iron stake driven into the ground at the stone wall; thence South sixty-three degrees West (S 63° W) fifty-six and three tenths (56.3)feet by said stone wall to an iron stake driven into the ground; thence South sixty-nine degrees fifteen minutes West (S 69° 15' W) one hundred sixteen and one-half (116½) feet by said

wall to
forty m
(128.5)
sixty-e
tenths
North e
nine te
thence
seventy
into th
19' W)
into th
one hun
into th
W) one
of begi
of this

of the
Road;
sixtee
cel to
thence
sevent
Beach
twenty
of beg

calle
bound

by Z.
of th
dred
(50)
by la
E) or

wall to an iron stake driven into the ground; thence South fifty-three degrees forty minutes West (S 53° 40' W) one hundred twenty-eight and five tenths (128.5) feet by said wall to an iron stake driven into the ground; thence South sixty-eight degrees nineteen minutes West (S 68° 19' W) one hundred and four tenths (100.4) feet by said wall to an iron stake driven into the ground; thence North eighty-eight degrees four minutes West (N 88° 04' W) seventy-seven and nine tenths (77.9) feet by said wall to an iron stake driven into the ground; thence South seventy-four degrees twenty-three minutes West (S 74° 23' W) seventy-nine and two tenths (79.2) feet by said wall to an iron stake driven into the ground; thence South fifty-seven degrees nineteen minutes West (S 57° 19' W) ninety-five and one tenth (95.1) feet by said wall to an iron stake driven into the ground; thence South sixty-four degrees ten minutes West (S 64° 10' W) one hundred six and nine tenths (106.9) feet by said wall to an iron stake driven into the ground; thence South sixty-five degrees thirty minutes West (S 65° 30' W) one hundred forty-four and eight tenths (144.8) feet by said wall to the point of beginning. The last ten courses described being bounded by said other land of this Grantor. The above courses refer to the 1931 magnetic meridian.

Parcel 2

Also another certain lot of land, bounded and described as follows:

BEGINNING at an iron stake driven into the ground at the Southerly corner of the above described parcel and on the Northerly side of said Hill's Beach Road; thence North eighty-six degrees twenty-seven minutes East (N 86° 27' E) sixteen and ninety-one one-hundredths (16.91) feet by said above described parcel to a drill hole in the ledge and land now or formerly of John J. Traynor; thence South three degrees thirty-three minutes East (S 3° 33' E) fifteen and seventy-five one-hundredths (15.75) feet by said land of Traynor to said Hill's Beach Road; thence North fifty degrees thirty-five minutes West (N 50° 35' W) twenty-three and eleven one-hundredths (23.11) feet by said road to the point of beginning.

Parcel 3

Also another certain lot or parcel of land, situated at Hill's Beach, so-called, in said Biddeford, and adjoining the first above described parcel, bounded and described as follows:

BEGINNING at the Northwest corner of Lot #18, on a plan of land made by Z. G. Staples for William A. Chadbourne, dated July 14, A. D. 1874, at land of the late Selucus Adams and S. S. Mitchell; thence running Southerly one hundred (100) feet to Lot #17 on said plan; thence Westerly by last named lot fifty (50) feet; thence North forty-eight degrees West (N 48° W) forty-eight (48) feet by land of said Adams; thence North fifty-one and one-half degrees East (N 51½° E) one hundred six (106) feet by land of said Adams and Mitchell to the place of

48
pg 146

Book 1484

beginning, and containing about five thousand four hundred and twenty-four (5,424) square feet, being the same parcel of land as described in deed of James B. Marr and others to Caroline P. Adams, dated April 1, 1891 and recorded in York County Registry of Deeds in Book 443, Page 88.

The above described premises were conveyed to the within Grantor by Les Soeurs de la Presentation de Marie by deed of Warranty, dated September 30, 1932 and recorded in York County Registry of Deeds in Book 834, Page 67.

Parcel 4

Also another certain lot or parcel of land, together with the buildings thereon, situated in said Biddeford and known as the old Ralph Tristram Jordan place situated on the northeasterly side of the Pool Road, so-called, bounded on the southwesterly side by said Pool Road; southeasterly by the road to the beach and land formerly of Mrs. Horace Woodman; on the northeasterly side by the Saco River; and on the northwesterly side by land, now or formerly of J. B. Coolbroth.

For more particular description of the premises hereinabove last described, reference is made to decree of Supreme Judicial Court of Maine in the matter of Hanford E. Finney against claiments known and unknown dated October 3, 1919, and recorded in said York County Registry of Deeds, Book 671, Page 374.

All fixtures and articles of whatever nature permanently attached to said buildings are included in this conveyance.

TO HAVE AND TO HOLD the aforegranted and bargained premises, with all privileges and appurtenances thereof to the said The Franciscan Fathers of Maine, its successors or assigns, to its and their use and behoof forever.

AND it does COVENANT with the said Grantee, its successors or assigns, that it is lawfully seized in fee of the premises; that they are free of all encumbrances; that it has good right to sell and convey the same to the said Grantee to hold as aforesaid; and that it shall and will Warrant and Defend the same to the said Grantee, its successors or assigns forever, against the lawful claims and demands of all persons.

IN WITNESS WHEREOF, the said Couvent de la Presentation de Marie has caused this instrument to be executed and its corporate seal affixed thereto by - - its Treasurer, thereunto duly authorized, this eighteenth day of April, in the year of our Lord one thousand nine hundred and sixty-two.

Signed, Sealed and Delivered
in Presence of

Harold D. Carroll

COUVENT de la PRESENTATION de MARIE
(Corporate Seal)
By Sister St. Leon of Rome
Leona Lafleur
Its Treasurer, thereunto duly authorized.

Attachment 1 – Activity Description

The Biddeford Campus of the University of New England (UNE), Maine's largest private university, is positioned at the confluence of the Saco River and the Atlantic Ocean. This location, along with state-of-the-art research facilities and world-class faculty, has recently earned UNE's marine programs rankings among the top 10 nationally from *Biology Explorer*, *College Choice*, and *College Magazine*. To expand UNE's unique experiential learning and research opportunities in the marine ecosphere, the University is proposing the construction of a permanent pier which will serve as a four-season research deployment facility directly adjacent to the Arthur P. Girard Marine Science Center on its Biddeford campus

UNE's School of Marine and Environmental Programs, housed in the Girard Marine Science Center, is the academic home of 325 undergraduate and graduate students who are studying marine science, marine policy and management, as well as a wide variety of interdisciplinary fields, including marine ecosystems, conservation, restoration, business, sustainable fisheries and ecological aquaculture, social-ecological systems, and marine sustainability science. Additionally, two programs provide pathways from undergraduate to graduate degrees in Marine Sciences and Maritime Law (a 3+3 partnership with Maine Law).

Three things distinguish UNE's marine programs. The first is the oceanfront location on its core undergraduate campus, which provides direct access to the Gulf of Maine. The second is the multitude of research opportunities available to students starting as early as their first year of undergraduate studies. And the third is how the marine research done by UNE students and faculty directly impacts the people of Maine and beyond.

However, all three of these key assets are limited by the lack of year-round access to the ocean. ***The planned pier will allow students and faculty to be on the water throughout the year, thereby greatly enhancing UNE's groundbreaking research into critical problems facing Maine.***

The jewel of UNE's marine programs is Ram Island, UNE's private one-acre living laboratory two miles from campus in Saco Bay, which was gifted to the University in 2014. The island, which houses a fieldwork station and an experimental kelp farm, provides unparalleled research and field study opportunities for students and faculty. It also creates the potential to develop research partnerships that focus on critical issues facing Maine, making Ram Island home to coastal zone investigations of climate change, marine geology, invasive species, marine mammal ecology and interactions with fisheries and marine aquaculture.

Despite its prime location with direct access to the ocean, UNE currently has floating docks that are removed seasonally, precluding access to Ram Island and other areas of the Gulf of Maine in the critical winter and spring months. Construction of a permanent pier at UNE's Girard Marine Science Center will allow for dynamic, year-round, ocean-going research activities, facilitating scientific and practical exchanges with local, regional, and national marine researchers and industry partners. Additionally, the deep-water access would expand UNE's ability to serve as a collaboration hub for coastal marine and deep-water science and industry. As good stewards of the environment and our coastal neighbors, UNE is committed to ensuring that the planned structure fully adheres to local, state, and national regulations.

Investment in UNE's marine programs is good for Maine taxpayers. With the Gulf of Maine warming faster than almost any other body of water on the planet, marine research afforded by year-round access to the water will allow UNE to gather critical data to guide Maine's response to climate change. These expanded research opportunities will likewise enhance UNE's ability to ensure that its students graduate with the curiosity and experience to both ask and answer the important questions that will inform to the data-driven decisions impacting the expanding fields of aquaculture, fisheries, marine law and policy, marine business and entrepreneurship, ocean food systems, and related fields.

The University of New England (UNE) campus is located along the Saco River in Biddeford, ME. The Marine Science Center (MSC) at UNE is located on the waterfront at the easterly end of campus approximately opposite Camp Ellis in Saco. UNE is proposing to construct a pier from the shore into the Saco River to support MSC research activities and provide an all-tide access facility for small and shallow draft vessels.

The proposed facility includes the following:

1. A pile supported pier structure extending from shore into the Saco River. The proposed pier includes an approximately 130-foot long approach section extending from shore and an 80-foot long pier head section oriented roughly parallel to the direction of flow in the river. The pier consists of a concrete superstructure on steel pipe piles, with timber fender piles for vessel berthing and floating docks, and a pile supported gangway lifting beam to allow the gangway ramp to be temporarily removed from the water.
2. A floating dock system consisting of one 8-foot by 24-foot float, one 8-foot by 26-foot 10-inch float, and one 12-foot by 30-foot gangway landing float to provide all-tide vessel access for UNE's vessels on the west side of the pier, and a single 6-foot by 20-foot floating dock to provide a tie-up location for the City of Biddeford Fire Boat on the east side of the pier.
3. An 80-foot by 5-foot gangway to provide ADA compliant access to the float system.
4. An upland access road connecting the existing road at the MSC to the proposed pier, including associated site grading, drainage, and stormwater management features.

The proposed activities are described in detail in the following sections.

Pier Structure

The proposed vehicle rated pier is supported by twenty-five concrete filled steel pipe piles and a concrete abutment which connects the pier to the proposed access road. All of the piles are located beyond the HAT line, while the abutment is located shoreward of the HAT line. Fourteen, 24-inch diameter steel piles support the pier head portion of the structure and eleven, 16-inch diameter steel piles support the pier approach. The seven piles at the first three pile bents at the pier approach will be socketed to ledge due to a limited soil layer above the ledge surface at these locations. The remaining piles will be driven to ledge but do not require socketing given the sufficient depth of overburden soils. The piles support precast concrete pile caps which support precast concrete deck planks that form the pier deck surface.

The pier includes thirty, 12-inch diameter timber fender piles to provide for vessel berthing at the main face of the pier and to restrain the floating dock system. All new fender piles will be untreated timber, greenheart species. A gangway lifting beam is proposed to lift the gangway out of the water during float

maintenance or in advance of severe weather. The lifting beam is supported by a steel column anchored to the pier on one side and a 10.75-inch diameter concrete filled steel pipe pile on the other.

The total direct impact from all the piles that makeup the pier structure is 84 square feet. The total indirect impact from the pier footprint beyond the HAT line is 3,579 square feet.

Floating Dock System

The proposed floating dock system includes four floating docks. The three timber floats on the west side of the pier are new, while the single float on the east side of the pier is an existing float that wil be relocated from UNE's facility that is located upstream of the proposed pier (note that this facility is proposed to be demolished). The new floats consist of an 8-foot by 24-foot float, an 8-foot by 26-foot 10-inch angled float, and a 12-foot by 30-foot gangway landing float. All new floats will be located on the west side of the pier approach at the south side of the pier head. The existing float is 6-feet by 20-feet and will be located on the east side of the pier approach at the south side of the pier head to provide a tie-up location for the City of Biddeford Fire Boat. The new floats are accessed by the proposed gangway or a fixed ladder, and the fireboat float is accessed solely by a fixed ladder. All the floating docks are located beyond the MLLW line and will be restrained and guided by the timber fender piles. The floats will allow vessels to tie up to the pier at any time during the tide cycle. The total indirect impact from the floating dock system is 848 square feet.

Gangway

The 80-foot by 5-foot gangway provides ADA compliant access to the new floating dock system on the west side of the pier. The gangway connects to the pier near the beginning of the pier approach and lands on the 12-foot by 30-foot floating dock. The total indirect impact from the gangway is 357 square feet (this area excludes the portion of the gangway located above the floating dock).

Pier Buildings

Two pier buildings are proposed to be located on the pier head. At the southeast corner of the pier head is an 8-foot by 10-foot pier shed. This structure will provide storage for small equipment used by MSC staff, as well as an indoor protected location to house certain utility features such as electrical service panels. A 16-foot by 20-foot covered outdoor classroom is proposed on the west end of the pier head. This structure will provide a covered area for students and staff to carry out educational programming on the pier while protected from direct rain or sun exposure.

Access Road

Vehicular and pedestrian access to the pier will be provided by a new single-lane access road that will extend from the existing MSC access road and parking area, around the east side of the MSC building, and to the end of the pier approach. The access road has a 20-foot paved width with a single 16-foot wide lane and 2-foot wide paved shoulders. A turnaround area is provided adjacent the pier approach to allow for vehicles up to and including fire trucks accessing the pier to turn around and drive forward to exit the access road. There is no parking proposed adjacent to the pier. All parking will use the existing parking spaces adjacent to the MSC building. The new road will provide construction access for the project, which will help to limit the amount of work performed from the water and allow more staging to

be achieved from land. The upland work will include stormwater management features that have been designed to meet Maine DEP Chapter 500 standards.

Summary of Impacts

Table 1 provides a tabulation of direct and indirect impacts associated with the proposed facility.

Item		Indirect Impact (SF)	Direct Impact (SF)
1	Pier Structure		
	Pier Support Piles	---	59.3
	Fender Piles	---	24
	Gangway Lifting Beam Support Pile	---	0.6
	Pier Footprint Beyond HAT Line	3579	---
	Total	**3579**	**84**
2	Floating Dock System		
	8-foot by 24-foot float	192	---
	8-foot by 26-foot 10-inch angled float	175	---
	12-foot by 30-foot float	360	---
	6-foot by 20-foot fireboat float	120	---
	Total	**848**	---
3	Gangway		
	5-foot by 80-foot gangway	357	---
	Total	**357**	---
TOTAL IMPACT AREA		4784	84

Attachment 2 – Alternatives Analysis

The Plans provided in attachments 5 and 6 detail the preferred alternative. This design was arrived at after extensive study of alternative locations and layouts for the pier over multiple years time. Alternatives considered in developing the proposed project are briefly described below.

2008-2010 Pier Feasibility Study

In 2008-2010, UNE completed a concept planning study for the proposed pier. In this study, nine alternative designs were developed for water access facilities along the UNE waterfront consisting of various configurations of piers, boat ramps, and upland access and support facilities. The alternatives were evaluated on a range of criteria including technical criteria, functionality, constructability, regulatory impacts, cost of construction, and others to identify a preferred facility location. The nine alternatives evaluated through this study are shown in the figure below. At the conclusion of this study, Site 7 (directly in front of the Marine Science Center building) was identified as the preferred facility location to develop a new pier facility that would consist of a pile-supported pier extending from shore out into the Saco River. This location is optimal for access to and from the MSC facility and on the water, and allows for all-tide berthing with a smaller structure and less impact than several adjacent alternatives that were considered. At the conclusion of this study it was determined that Site 7 was the preferred alternative to move forward with further planning and design.

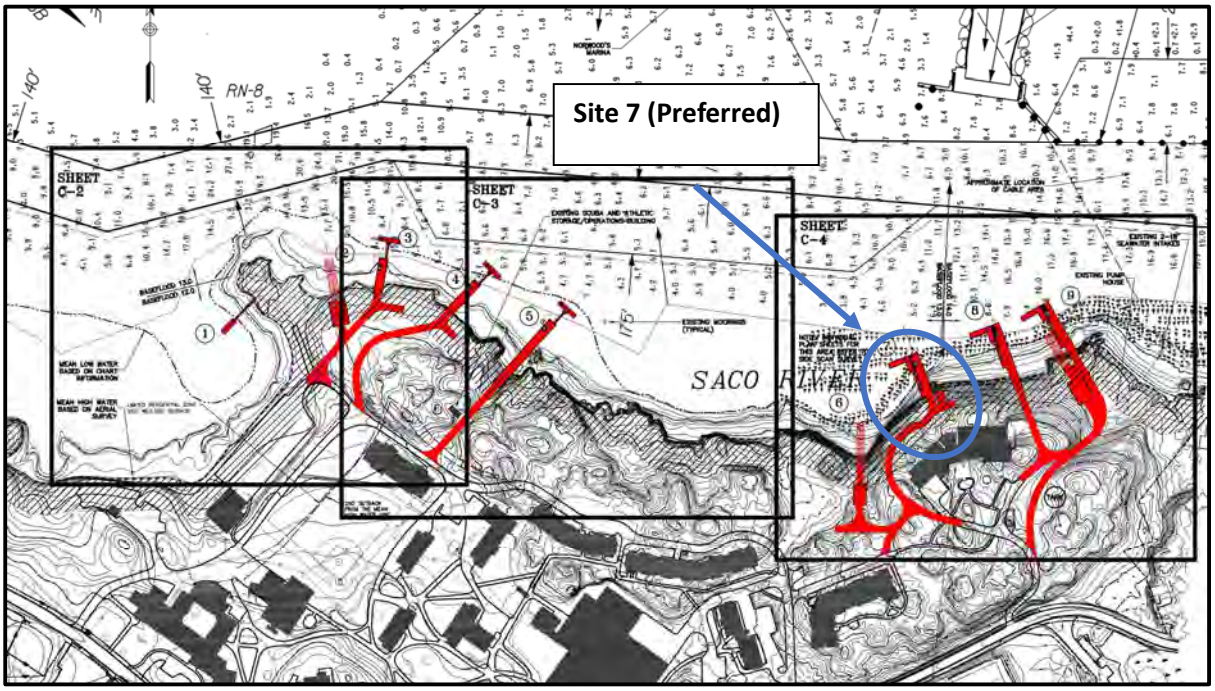

2015-2016 Pier Layout Study

After completion of the pier feasibility study described above, UNE undertook additional effort to study alternative pier layouts that would address the functional needs of the facility as well as the site exposure, berthing conditions, access requirements, and associated site impacts. During this study, numerous alternative pier layouts were considered which are depicted in the two figures that follow.

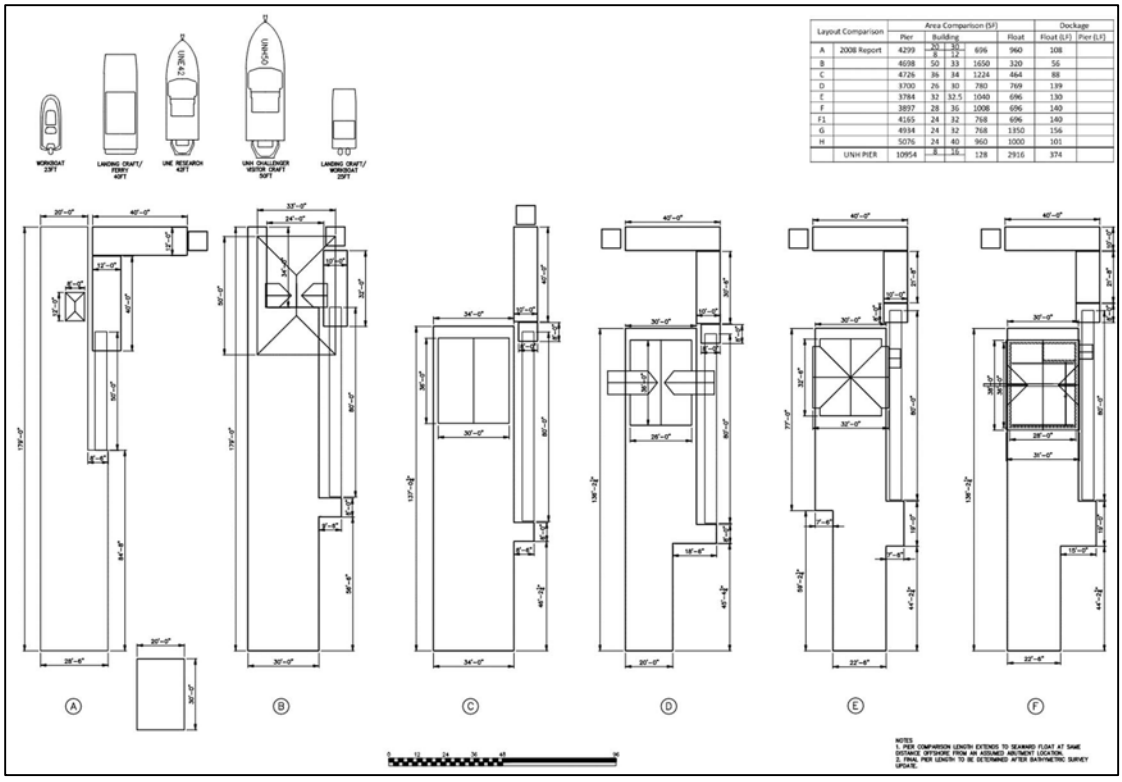

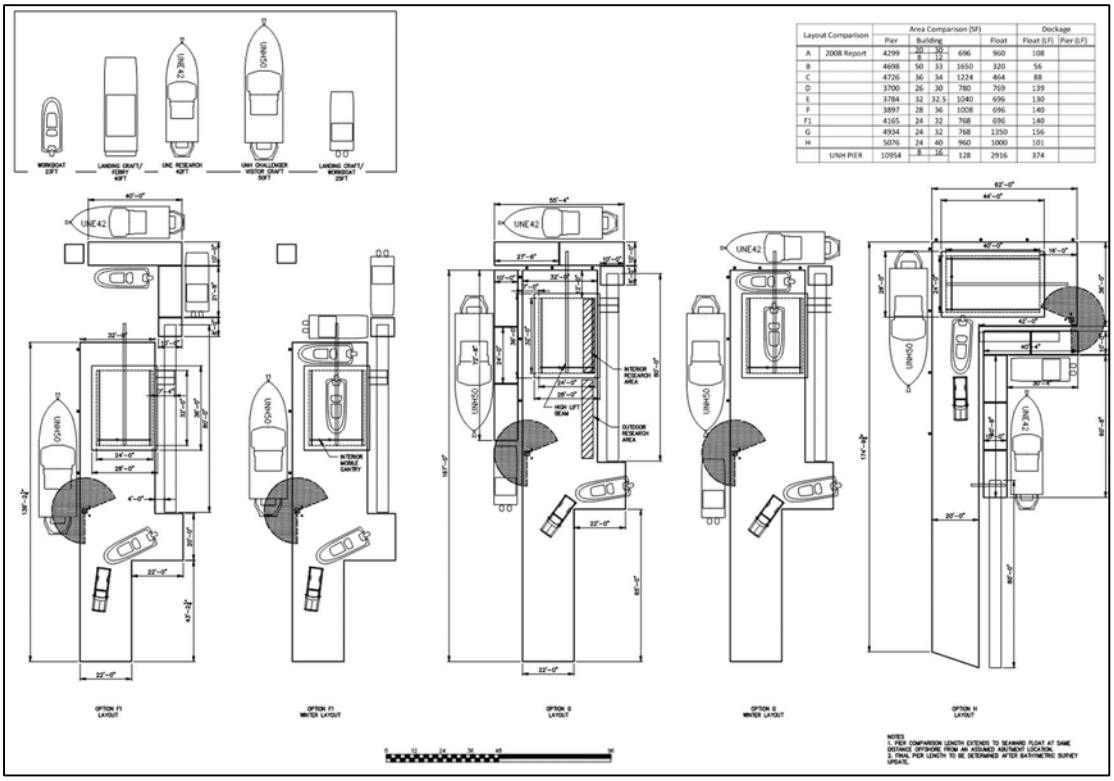

Further alternative development was completed in 2016 to address a realignment of the pier head parallel to the predominant direction of flow in the River for improved berth functionality. These alternatives considered input of the Biddeford Harbormaster and his knowledge of boating and

conditions on the Saco River after review of earlier layouts during a meeting in early 2016. The figure below depicts three alternatives considered during the study.

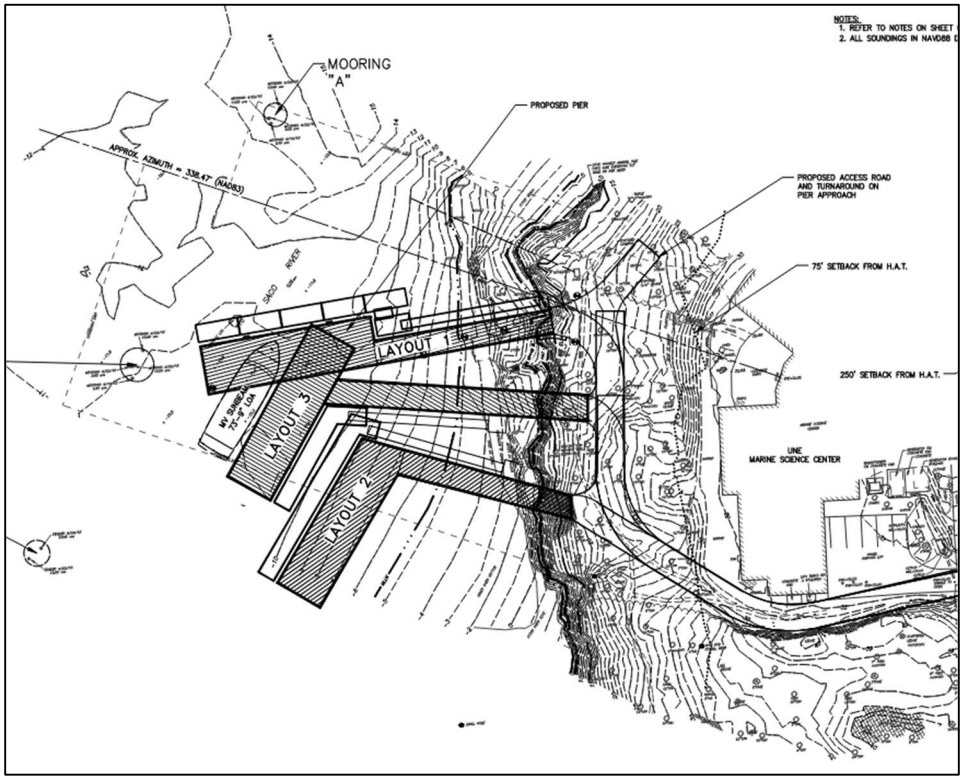

2023 Layout Refinement

During design refinement undertaken in 2023, the preferred alternative was identified as a combination of the pier approach from Layout 1, and the pier head from Layout 3, of the 2016 layout study. The Layout 1 pier approach represents the least impactful and most feasible option for upland site access. The Layout 3 pier head provides more desirable berthing conditions by aligning the main berth with flow directions in the River, and reaches sufficient depth to provide all-tide access for the range of vessels anticipated to use the facility. The layout was then refined somewhat to reduce the size of the structure to keep the dimensions to the minimum necessary to accomplish the functional goals of the project. During this refinement, the dimensions of the pier head were reduced from the initially proposed 28-feet wide by 100-feet long, to the currently proposed 23-feet 4 inches wide by 80-feet long. The dimensions of the float dock system were reduced somewhat, and the layout of fender piles was refined to reflect a functional design with minimum necessary dimensions and impacts.

The preferred alternative as currently presented represents a facility of the smallest dimensions possible to provide a functional facility that provides all-tide access for the range of vessels anticipated to use the facility, and ADA compliant access to the floating dock and gangway system and berthed vessels. While it could be possible to further reduce site impacts by further reducing the dimensions of the facility, any reduction beyond the size that is currently proposed would impact the proposed uses of the facility.

Do Nothing Alternative

A Do Nothing Alternative is the least impactful option, but would fail to address the goal of providing all-tide access to support UNE's marine research and educational programming through the marine science center. The existing seasonal floats and gangway located on the UNE campus upstream of the MSC building do not effectively meet these needs. Therefore, a Do Nothing alternative is not considered to be a feasible long-term solution.

ATTACHMENT 3 – LOCATION MAP

ATTACHMENT 3 - LOCATION MAP

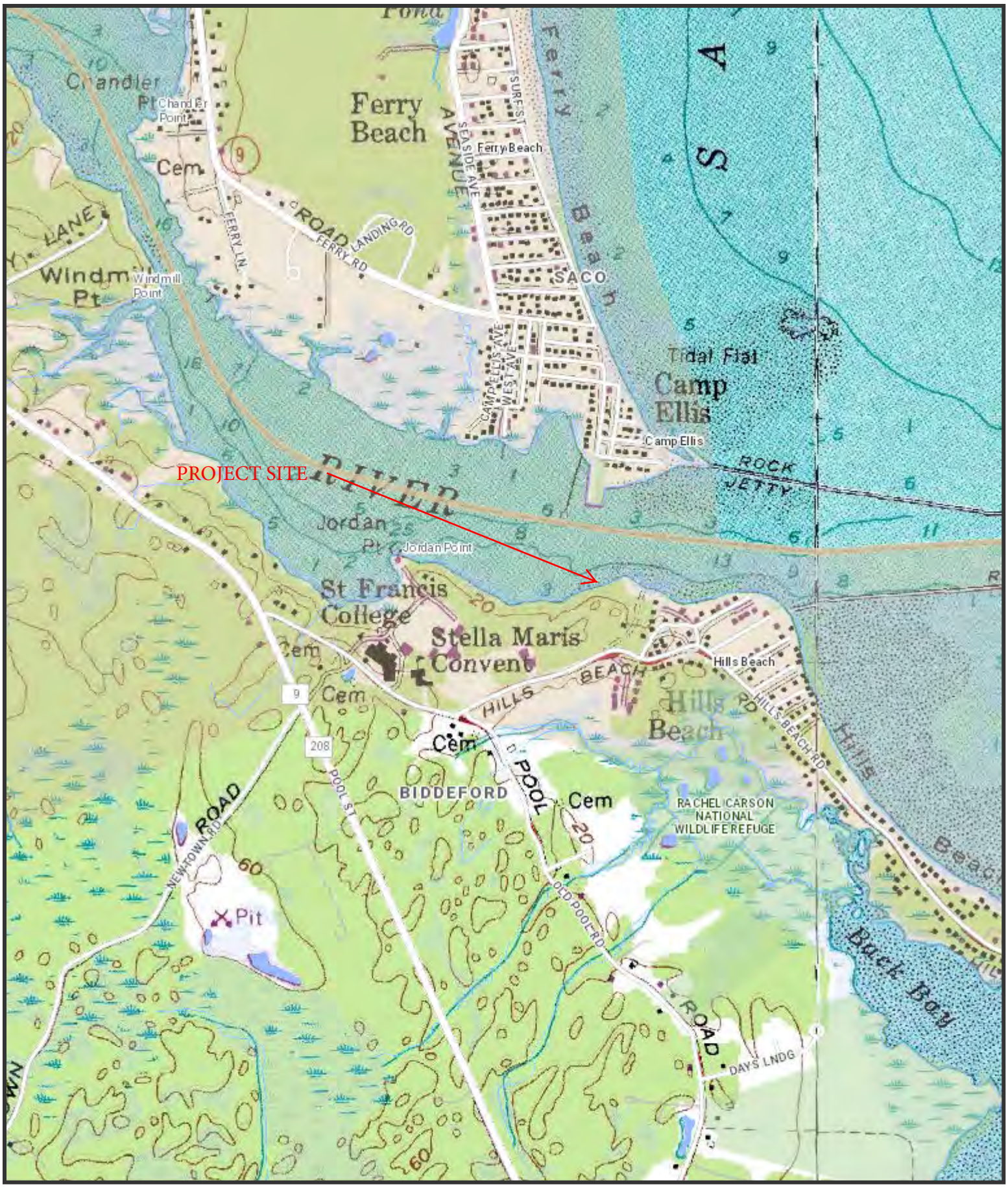

The Maine Department of Transportation provides this publication for information only. Reliance upon this information is at user risk. It is subject to revision and may be incomplete depending upon changing conditions. The Department assumes no liability if injuries or damages result from this information. This map is not intended to support emergency dispatch.

0.25 Miles

1 inch = 0.28 miles

Date: 6/8/2023
Time: 3:54:08 PM

ATTACHMENT 4 – PHOTOS



Looking down river



Looking down river.



At site.

ATTACHMENT 5/6 – PLANS

Attachment 7 – Construction Plan

Construction Access

The project occurs on a waterfront site along the Saco River. The proposed activities will require construction access by land and from water. Access by land will be by roads on the UNE campus. The new pier access road will be roughed-in early in the construction to provide an upland route for construction access, material deliveries, and staging. Access to the site by water will be by barge from the Saco River. The contractor will be directed to avoid impacts to the nearby federal navigation channel and adjacent waterfront facilities during site access. Short-term temporary impacts to the federal channel and adjacent facilities may be necessary during various stages of the project. The contractor will be directed to coordinate impacts with adjacent facility owners, the Biddeford and Saco Harbormasters, the Coast Guard, and the Army Corps of Engineers.

Construction Notices

The owner and/or owner's agent will notify abutting property owners when the work starts and will keep them informed of changes in project schedule.

Method of Construction

The work will require mobilization of marine construction equipment (barge, crane, tug, work boat), and upland construction equipment (earthmoving, concrete placement, paving). The pier design uses pre-fabricated components to the greatest extent possible to minimize the required onsite construction time. A summary of the construction process is provided below:

1. Contractor mobilization for upland construction.
2. Rough-in access road and install temporary erosion and sedimentation control measures.
3. Construct concrete pier abutment.
4. Contractor mobilization for marine construction.
5. Drive steel pipe piles.
6. Install precast concrete pile caps using barge mounted crane.
7. Install precast concrete deck planks using barge mounted crane.
8. Install timber fender piles and associated fendering components.
9. Install floating docks and gangway.
10. Complete construction of pier topside components including timber curbs, metal handrails, utilities, pier buildings, jib crane, and ancillary features.
11. Complete construction of access road including paving and permanent erosion and sedimentation control measures
12. Demobilize from site.

Construction Schedule

The construction is proposed to take place during winter 2024-2025. The construction is estimated to take 8-9 months to complete. It is anticipated that the start of upland construction will be scheduled in early fall to allow the access road to be roughed-in prior to the start of marine construction. Marine

construction will be completed in compliance with the standard November 8-April 9 in-water work window. All in-water work will be completed within this window. Topside work on the pier may extend beyond the end of the in-water work window. Final completion of the upland access road is anticipated to be in late spring to early summer 2025, as this will need to be timed to consider local road postings that may impact construction equipment and material access to the site.

ATTACHMENT 8 – EROSION CONTROL PLAN

Erosion control details and specifications are included on the project plans.

ATTACHMENT 9 – WETLAND DELINEATION REPORT/COASTAL WETLAND CHARACTERIZATION APPENDIX B

WETLAND SURVEY UPDATE
PROPOSED PIER MARINE SCIENCE CENTER
U.N.E. - BIDDEFORD, MAINE

Prepared for

SITE DESIGN ASSOCIATES



Prepared by

STATEWIDE SURVEYS, INC
SOIL SCIENTISTS & LAND SURVEYORS
35 Eastman Road, Cape Elizabeth, ME 04107
Phone: 207-767-4200

STATEWIDE SURVEYS, INC
SOIL SCIENTISTS & LAND SURVEYORS
35 Eastman Road, Cape Elizabeth, ME 04107
Website: www.statewidesurveys.com
Phone: 207-767-4200

WETLAND SURVEY UPDATE
PROPOSED PIER MARINE SCIENCE CENTER
U.N.E. - BIDDEFORD, ME.

REPORT CONTENT

1.0 PROJECT INTRODUCTION
2.0 PROJECT METHODOLOGY
3.0 PROJECT SUMMARY

APPENDIX A: PLAN (REDUCED)
APPENDIX B: WETLAND TOPOGRAPHIC PLAN (REDUCED)
APPENDIX C: PHOTOGRAPHS
APPENDIX D: NATIONAL WETLANDS INVENTORY MAP
APPENDIX E: NRCS SOIL MAP
APPENDIX F: F.E.M.A. FLOOD MAP
APPENDIX G: HIGHEST ASTRONOMICAL TIDE MAP
APPENDIX H: COASTAL SAND DUNE MAP

STATEWIDE SURVEYS, INC
SOIL SCIENTISTS & LAND SURVEYORS
35 Eastman Road, Cape Elizabeth, ME 04107
Website: www.statewidesurveys.com
Phone: 207-767-4200

April 9, 2023

Mr. Thomas Saucier
Site Design Associates
23 Whitney Way
Topsham, ME. 04086

WETLAND SURVEY UPDATE
PROPOSED PIER MARINE SCIENCE CENTER
U.N.E. - BIDDEFORD, ME.

Tom,

Please review the following updated Wetland Report for the proposed Pier at the University of New England (UNE) Marine Science Center.

1.0 PROJECT INTRODUCTION

As requested, this report is a summary of a 2023 review of prior wetland surveys for the proposed permanent Pier location at the UNE Marine Science Center in Biddeford originally completed on September 3 and 23, 2015. We have revisited the area several times since the first wetland survey for various efforts and the site is generally unchanged from the 2015 survey. We understand that the current proposed Pier location has shifted alignment slightly toward the northwest from the previous proposed alignment back in 2015. In 2023 the project area was expanded southerly of the 2015 wetland survey to the northerly end of Hill's Beach. We added Wetland D at the transition point from the rocky Saco River ledges to the sandy outwash of Hill's Beach. These areas are not in the immediate vicinity of the proposed Pier and should not be impacted by its construction.

The project area generally consists of uplands with shallow soils over bedrock above short and steep bedrock exposures (ledges) leading down and into the Saco River at some locations. Areas of shaly/gravelly soil exposures are intermixed with silty/sandy flats that are exposed at low tide along the base of these bedrock faces. We did not identify any wetland colonies within the proposed Pier limits however two small colonies of coastal wetland plants (Wetlands A & B) are located in the rocky beach along the original southerly project limits. There is a small "perched" wetland (Wetland C) lying in a narrow shelf of the bedrock cliff northerly of the proposed Pier location.

This spring (2023) we delineated a Coastal Wetland (Wetland D) southerly of the original survey area that was added to the original survey limits and approximately six hundred feet (±600') distant from the

proposed Pier Project. Wetland D is located at the northerly end of Hill's Beach at the transition spot from rocky shoreline along the Saco River to the sandy Hill's Beach.

Lastly, we also noted a small "pocket" of coastal wetlands approximately three hundred feet (±300') northerly of the original survey area. The National Wetlands Inventory (NWI) mapping closely resembles the wetland areas in this area and further described in the following.

2.0 PROJECT METHODOLOGY

We reviewed the Medium Intensity Soil Survey by the Natural Resource Conservation Service (NRCS), Maine G.I.S. website for Aerial Photography, Shorebird Feeding Habitat, Shorebird Roosting Habitat, U.S. Fish & Wildlife's National Wetland Inventory Maps, Topographic/Soundings Survey by Statewide Surveys, Inc and Owen Haskell, Inc, Wetlands/Deep Water Classifications by Cowardin and The Identification and Management of Significant Fish and Wildlife Resources in Southern Maine by the Maine Inland Fisheries and Wildlife and the Coastal Sand Dune Geology Map by the Maine Geological Survey prior to conducting the Wetland Survey.

The project limits were defined by Site Design Associates in 2015 and redefined in 2023. Relative site features were located within the project area using a Trimble® Geo-XH Global Positioning Unit (GPS). The wetlands were reviewed again during topographical and bathymetric surveys. We surveyed the site at low tide conditions during both visits in the spring of 2023 and back in 2015 to thoroughly examine and photograph the site within project limit for wetlands.

We also used hand tools to observe the limited soils available in both the uplands and river floodplain. We documented any clams, mussels and marine worms where soils were observed at intermittent locations within the Low, Mid and High Intertidal Zones. We did not identify any wetland vegetation within the proposed location for the new Pier. However, small wetland communities were documented and mapped where present within the project limits.

Typically, three wetland parameters are required with the Routine Method described in the 1987 U.S. Army Corps of Engineers (USACE) Wetland Delineation Manual and its Regional Supplement: North-Central and Northeast Region (Version 2). These environmental parameters include: the presence of hydric soils[1], the predominance of hydrophytes[2] and evidence of wetland hydrology[3].

1. *"Hydric" soils formed under conditions of saturation, flooding, or ponding long enough during the growing season to develop anaerobic conditions in the upper part (NEIWPCC).*
2. *"Hydrophytes" are plants growing in wetlands that have adapted in one way or another to life in permanently or periodically inundated or saturated soils (USACE).*
3. *"Hydrology" is permanent or periodic inundation, or soil saturation to the surface, at least seasonally is the driving forces behind wetland formation (USACE).*

The project area was expanded in 2023 to include more area southerly of the proposed pier site. We delineated a coastal wetland (Wetland D) along the southerly limits of the newly expanded project area. These coastal wetlands have alluvial and "hydric" soil conditions, presence of hydrology and a prevalence of hydrophytes thereby meeting the required wetland criteria identified in the USACE manual.

The three parameters are not all present at the proposed Pier location and we understand the site would

meet the Maine Department of Environmental Protection (MDEP) Shoreland Zoning-Coastal Wetlands. Specifically, lands below the HAT Line which is determined by elevation 6.6' NAVD-88. A wrack line is evident in the field which is a visual indicator of the daily high tide limits and likely slightly below the HAT elevation.

Coastal Wetlands are defined as: All tidal and sub-tidal areas, including all areas below any identifiable debris line left by tidal action; all areas with vegetation present that is tolerant of saltwater and occurs primarily in a salt water or estuarine habitat and any swamps, marsh, bog, beach, flat or other contiguous lowland which is subject to tidal action during the maximum spring tide level as identified in the tide tables published by the National Ocean Service (38 MRSA 480-B).

The 2015 Wetland Survey found small colonies of vegetation commonly found in Coastal Wetlands within the project limits, however these areas are not within the area for the proposed Pier. We designated these areas as Wetlands A, B and C and are all located below the HAT Line within the intertidal zone. We revisited the site in 2023 on two occasions to review wetlands in the expanded area lying southerly of the original project area. We added Coastal Wetlands "D" during these visits and the limits were located during topographical survey work.

Wetlands A & B

Both Wetland A (55 ft^2) & Wetland B (107ft^2) are two small stands of sparsely populated plant colonies that are nearly connected and located in the rocky beach southerly of the project area. The sparsely populated plant species included the sea lettuce (Ulva lactuca) along the water's edge, smooth cordgrass, a few orachs (Atriplex sp.), sea-shore goldenrods (Solidago sempervirens) with some scattered sea plantain. These areas are shallow to refusal in the rocky substrate with less than seven inches of alluvium (<7") consisting of shaly very dark graying brown sandy loams and loamy sands. Both areas are below the HAT line.

Wetland C

Wetland C (41 ft^2) is a small "perched" wetland located on a "shelf" in the ledge exposure northerly of the proposed pier location in the project area. The small area is also below the HAT Line and inhabited with a sparse plant community underlain with shallow alluvial soils. The small colony of herbaceous halophytes and/or hydrophytes are rooted into the shallow alluvial soils with daily tidal inundation being located below the obvious high tide line. The sparse and intermixed vegetation considered hydrophytes and halophytes included: sea lavender (Limonium carolinianum), smooth cordgrass (Spartina alterniflora), seaside goldenrod (Solidago sempervirens) and rockweed. This narrow area was not "flagged" for environmental reasons being underwater at times and flagging will not stand the tidal currents. Please see attached map for wetlands location.

Wetland D

Wetland D is a narrow Coastal Wetlands area along the Back Sand Dune of the reaches of Hill's Beach. This open ended area marginal wetland was added in 2023 with the expansion of the overall Project Limit. Wetland D has an evident wrack line with sparsely populated individual sea-shore goldenrods (Solidago sempervirens), cordgrass (Spartina alterniflora), american beach grass (Amnophila breviliguata) and raspberry (Rubus sp.) stems between the wrack line and upland vegetation. This area has slight characteristics of a back sand dune environment. The sparse vegetation is mainly between the principle

wrack line and the apparent HAT Line. This open ended wetland area begins where the rocky shoreline of the Saco River meets with the flat sands of the northern end of Hills Beach. Our first visit in 2023 found the area saturated from the previous high tide cycle and the wetland limits were readily apparent to the upland vegetation edge. The upland edges are inhabited with freshwater (palustrine) species including: sumac (Rhus sp.), honeysuckle (Lonicera sp.) and oaks (Quercus spp.).

Upland Characteristics

The site is generally gently sloping downward in an easterly direction toward the Saco River. We found the adjacent uplands to be consistent with the NRCS Soil Map where the NRCS identified the area with Lyman Rock-Outcrop Complex in the Soil Survey of York County, Maine. The upland soils are shallow to hard bedrock intermixed with bedrock exposures or outcroppings.

Mature trees are sparsely inhabiting the land in front of the Marine Science Center and the proposed Pier location. These trees include white oak (Quercus alba), red oak (Quercus rubrum) and shagbark hickories (Carya ovata). These hardwoods appear to be mature, however also appear somewhat stunted growth likely from the limited availability of nutrients in the shallow soils.

We did not observe any wildlife in the upland areas during the 2023 review, however there is evidence of remnant squirrel nut casings under the oak trees. In 2015 we observed some bird and animal species using the Saco River while on-site collecting data for the wetlands including: belted kingfisher (Ceryle alcyon), ring billed gull (Laurus delewarensis), great commorant (Phalacrocorax carbo) and a least sand piper (Calidris minutilla). We also observed some invasive green crabs (Carcinus maenas) and sand shrimp (Crongon septemspinosa) in the shallow water along the river's edge. We only observed a breeding (presumed) pair of canadian geese and a loon with winter plumage in 2023.

We did not identify any special wildlife resources such as nesting, rookeries, nesting sites, seal haul outs etc. We reviewed the MDEP website for Shorebird Feeding and Roosting Habitats. None were listed or identified at the proposed project area. Additionally, we referred to The Identification and Management of Significant Fish and Wildlife Resources in Southern Coastal Maine for resources in this area. The document identifies the mouth of the Saco River with Shorebird Feeding and Roosting Areas which is southerly of the project location.

3.0 PROJECT SUMMARY

The 2023 realignment location for the proposed Pier is very close to the 2015 area and along the same ledges as the original location. The 2023 alignment appears to be better positioned in relation to the shoreline and the Saco River flow from our site observations. The site generally consists of bedrock controlled uplands leading down to short steep bedrock cliffs and the rocky shoreline of the Saco River. We reviewed the project study area for wetland habitats as shown on the survey plan. The approximate high tide line is very evident with its intermittent "wrack" or debris line along the bedrock cliff exposures representing fluctuating water levels and tidal events.

The footprint area for the proposed Pier is nearly void of any vegetation except some rockweed (Fucus vesiculosus) along the lower parts of the rocky ledges in the mid-intertidal zone and above the Saco River and the low intertidal zone. The natural scouring effect of the fluctuating tides apparently limits plants with

an opportunity to anchor in the lower-intertidal zone or the subtidal river bottom.

We observed some very dark, mixed alluvial soils (deposited materials) below the apparent high tide lines and along the bottom of the bedrock cliffs and the Saco River's edge. Most of the alluvial soils where present are subtidal or just above being completely submerged at low tide and considered as hydric under flooded conditions. There are also small areas with shallow soil "pockets" that are intermixed among boulders and stones along the bedrock cliffs that "grade" down to mixed coarse and fine shales, gravels, sands and silts of the unconsolidated Saco River bottom.

We did not identify any typical coastal wetlands vegetation within the footprint area for the proposed Pier alignment. We understand that wetland regulations are in effect below the Highest Annual Tide of 6.6' NAVD-88 Datum where typical wetland vegetation is not present. We also understand regulatory setbacks (buffers) including the Shoreland Zone would originate above the HAT Line.

We noted another coastal wetland in the intertidal zone to the north of the project limits and not shown. This small wetland colony should not be impacted from the Pier installation. The NWI maps indicated these findings as well with coastal wetlands located both to the north and south of this project area. Both the north and southerly coastal wetlands have been designated as E2AB1N (Estuarine, intertidal, algae aquatic bed, regularly flooded & tidal fluctuation) on the NWI maps. The Saco River is designated as E1UBL (Estuarine, subtidal with unconsolidated bottom).

The project is subject to regulatory review being located within the Saco River floodplain and the Shoreland Zone at the State & Federal Level by the MDEP and the USACE. We understand regulatory setbacks would be measured from the HAT Line per elevation 6.6' NAVD-88 without a coastal wetland boundary to measure from. We also understand, permitting with the MDEP would be with the Mandatory Shoreland Zoning Act (MSZA) and typically required within 250' of the high water mark of a great pond or river, upland edge of a coastal wetland. We further understand that state regulations are in effect within 75' or 100' of the HAT line depending on the type and size of any proposed impacts to these areas.

We recommend reviewing the MDEP Natural Resources Protection Act (NRPA) Permit Applications and scheduling a Pre-Application meeting with the regulatory agencies to determine the required permits for the proposed permanent Pier. We understand that Resource Permits will be required for the permanent Pier within the intertidal zone and below the HAT Line. Areas below the HAT Line at the site meet the definition for Coastal Wetlands. Coastal Wetlands are also considered as "Wetlands of Special Significance" with the MDEP. Impacts to "Wetlands of Special Significance" could require offsetting mitigation depending on the size and type of impact. Lastly, additional permits with the MDEP are likely for any impacts are proposed in and adjacent to the Sand Dunes at Hill's Beach.

Wetlands are regulated also by the USACE under the provisions of Section 404 of the Clean Water Act below the HAT Line and navigable waters of the United States. The USACE may also review permit applications resulting from wetland impacts. We understand permits will be required to alter the wetland resources on-site below the HAT Line. The Corps will evaluate the Pier project and determine the appropriate permit/s required for impacts to Coastal Wetlands whether they are "Wetlands of Special Significance" or not with the MDEP.

The City of Biddeford also has a Code of Ordinances in effect with regulations over resources including the Saco River. The City should be consulted with regarding any local permits that may be required for work in or adjacent to the resource. This may require a UNE Representative to sign local permitting applications. A

MDEP or USACE or Biddeford Official may be required or helpful to determine the permit/s needed for the proposed project along the Saco River shoreline and working within the Shoreland Zone and its buffer. We can assist with environmental meetings with the City, MDEP or USACE if needed.

We further recommend contacting Dig-Safe for underground utility locations. An independent contractor may be necessary to mark utilities on private property. Lastly, we always recommend implementing Best Management Practices (BMP's), especially for stormwater and erosion control during and after construction until the site becomes stabilized and compliance with all environmental regulations during site work.

In the event you have any questions or need further assistance, please contact me using the office addresses provided or the office number at 207-767-4200.

Respectfully Submitted,

Dale A. Brewer
STATEWIDE SURVEYS, INC
Dale A. Brewer LSS/PLS
President

WETLAND SURVEY UPDATE
PROPOSED PIER MARINE SCIENCE CENTER
UNIVERSITY OF NEW ENGLAND
HILL'S BEACH ROAD, BIDDEFORD, ME.

APPENDIX - A
PROPOSED PIER PLANS
(REDUCED)



0 30 60
SCALE, FEET

ELEVATION	MLLW	NAVD88*
EPE	+10.0	+14.3
HAT	+11.6	+9.6
MHHW	+9.7	+4.7
MHW	+9.3	+4.3
MSL	+4.8	-0.2
MLW	+0.3	-4.7
MLLW	0.0	-5.0

*PROJECT DATUM

Attention:
If this scale bar does not measure 1" then drawing is not original scale.

DRAFT

Designed: DJB
Drawn: JAM
Checked: BJB
Approved:
P.E. No:
GEI Project 2203703

GEI Consultants
GEI CONSULTANTS, INC
3 MILK STREET
PORTLAND, ME 04101
(207)797-8901

UNE
UNIVERSITY OF NEW ENGLAND
11 HILLS BEACH RD.
BIDDEFORD, MAINE

UNIVERSITY OF NEW ENGLAND MARINE SCIENCE CENTER PIER

11 HILLS BEACH ROAD
BIDDEFORD, MAINE

NO	DATE	ISSUE/REVISION	APP
2	2/15/2023	30% DESIGN SUBMISSION	DJB
1	12/9/2022	15% DESIGN SUBMISSIONREV	DJB
0	11/11/2022	15% DESIGN SUBMISSION	DJB

SHEET NAME: SITE PLAN

SHEET NO.: C-002

WETLAND SURVEY UPDATE
PROPOSED PIER MARINE SCIENCE CENTER
UNIVERSITY OF NEW ENGLAND
HILL'S BEACH ROAD, BIDDEFORD, ME.

APPENDIX - B
WETLAND SURVEY PLAN
(REDUCED)

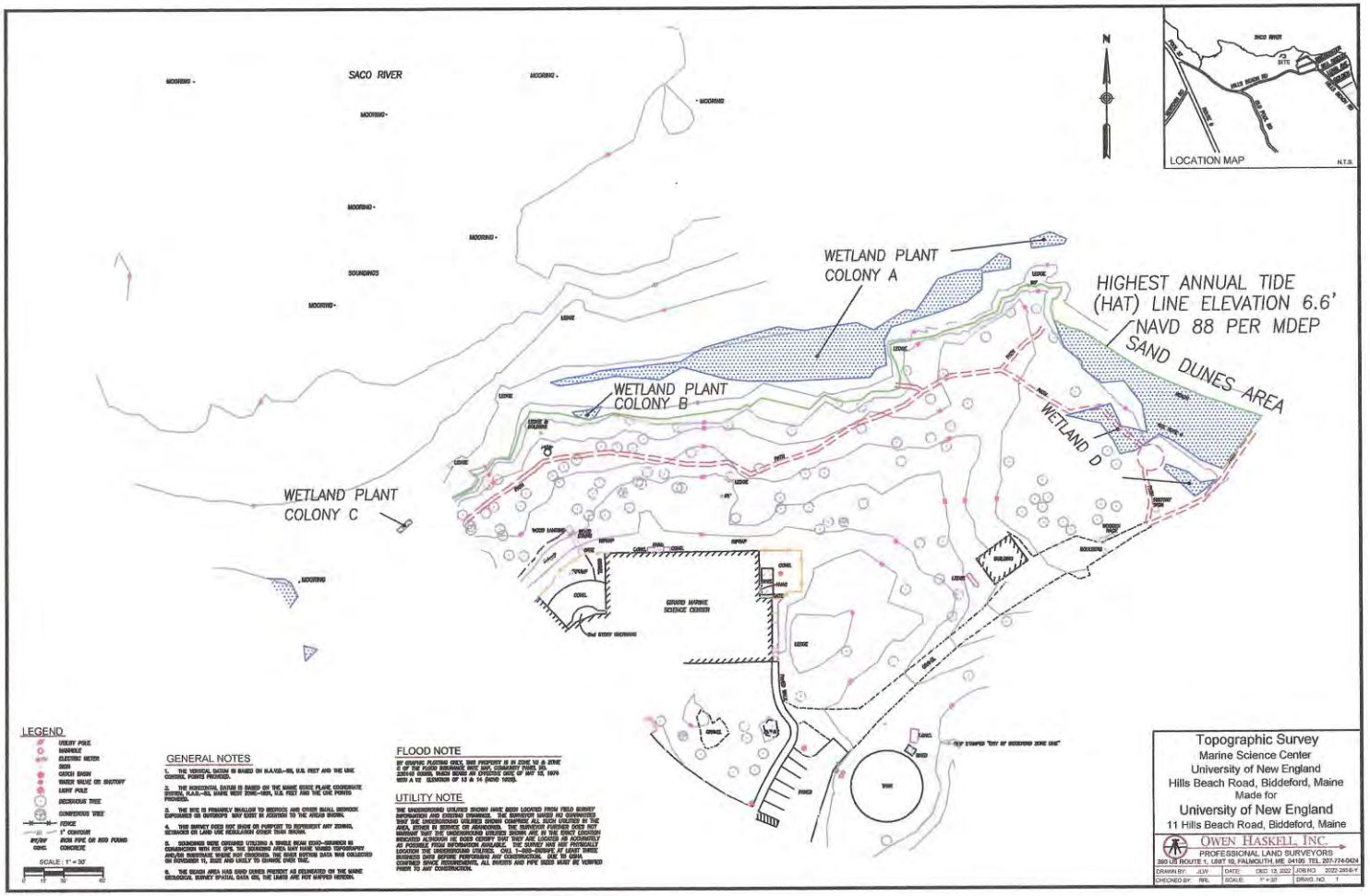
SACO RIVER
MOORING
SOUNDINGS
WETLAND PLANT COLONY A
WETLAND PLANT COLONY B
WETLAND PLANT COLONY C
HIGHEST ANNUAL TIDE (HAT) LINE ELEVATION 6.6' NAVD 88 PER MDEP
SAND DUNES AREA
WETLAND D
GRAVEL MARINE SCIENCE CENTER
LOCATION MAP
N.T.S.
LEGEND
GENERAL NOTES
FLOOD NOTE
UTILITY NOTE
Topographic Survey
Marine Science Center
University of New England
Hills Beach Road, Biddeford, Maine
Made for
University of New England
11 Hills Beach Road, Biddeford, Maine
OWEN HASKELL, INC.
PROFESSIONAL LAND SURVEYORS
DRAWN BY: JLW
DATE: DEC 13, 2022
JOB NO. 2022-295-6-Y
CHECKED BY: RRL
SCALE: 1" = 30'
DRWG. NO. 1

WETLAND SURVEY UPDATE
PROPOSED PIER MARINE SCIENCE CENTER
UNIVERSITY OF NEW ENGLAND
HILL'S BEACH ROAD, BIDDEFORD, ME.

APPENDIX - C
PHOTOGRAPHS



Photograph One. Photograph of the “perched” Wetland “A” located on a “shelf” in the side of the bedrock cliff. Photograph date: 09/03/2015.



Photograph Two. A westerly view of the original site for the proposed pier in 2015. Note the rocky shoreline transitions into a small gravelly sandy flat. The coastal low marsh wetlands in the background are beyond the survey area. Photo date: 09/03/2015.



Photograph Three. An easterly view of Wetland Plant Colony B and the rocky beach. Note the sparsely populated colonies of sea lavender, smooth cordgrasses, plantains, bladder rockweeds. Photograph date 09/03/2015.



Photograph Four. A photo from Wetland Plant Colony C and the rocky beach along the project limits. Note the sparsely populated colonies of sea plantains and Orachs. Photograph date 09/03/2015.



Photograph Five. A northwesterly view of the location for the proposed Pier. Note the line of tidal action on the ledges which is the approximate HAT Line. A narrow band of rockweeds along the bottom ledges and rocky shoreline. Photograph date 04/08/2023.



Photograph Six. A photo looking south at the proposed Pier location and lower, mid and high intertidal zones from the Saco River edge. Note the Girard Marine Science Center in the background. Photograph date 04/08/2023.



Photograph Seven. The mixed coarse and fines along the base of ledges at the proposed Pier site in the lower intertidal zone and above the silty sandy unconsolidated substrate of the Saco River. Photograph date 04/08/2023.



Photograph Eight. A photo of the mixed silty sandy gravelly (unconsolidated) Saco River bottom at the proposed Pier location in the subtidal zone. und. Photograph date 04/08/2023.



Photograph Nine. A easterly view along the Saco River and Wetland Plant Colony A at low tide along the shoreline. This area is approximately 200' southerly from the proposed Pier and should not be impacted from the Pier. Photograph date 04/08/2023.



Photograph Ten. A photo looking northwesterly at a portion of Coastal Wetland D along the back Sand Dune of the northern end of Hills Beach. Photograph date 04/08/2023.



Photograph Eleven. A soft shelled clam was found in the sandy cove approximately 100' northerly of the proposed Pier. This specimen was among other visible siphon breathing holes. Photograph date 04/08/2023.



Photograph Twelve. A marine worm found in the sandy cove approximately 100' northerly of the proposed Pier. This specimen was among other visible clam siphon breathing holes. Photograph date 04/08/2023.

WETLAND SURVEY UPDATE
PROPOSED PIER MARINE SCIENCE CENTER
UNIVERSITY OF NEW ENGLAND
HILL'S BEACH ROAD, BIDDEFORD, ME.

APPENDIX - D
NATIONAL WETLANDS INVENTORY
MAP

U.S. Fish and Wildlife Service

National Wetlands Inventory

UNE PIER

Sep 21, 2015



Wetlands

- Freshwater Emergent
- Freshwater Forested/Shrub
- Estuarine and Marine Deepwater
- Estuarine and Marine
- Freshwater Pond
- Lake
- Riverine
- Other

Riparian

- Herbaceous
- Forested/Shrub

Riparian Status

- Digital Data

This map is for general reference only. The US Fish and Wildlife Service is not responsible for the accuracy or currentness of the base data shown on this map. All wetlands related data should be used in accordance with the layer metadata found on the Wetlands Mapper web site.

User Remarks:

WETLAND SURVEY UPDATE
PROPOSED PIER MARINE SCIENCE CENTER
UNIVERSITY OF NEW ENGLAND
HILL'S BEACH ROAD, BIDDEFORD, ME.

APPENDIX - E
NRCS SOIL MAP

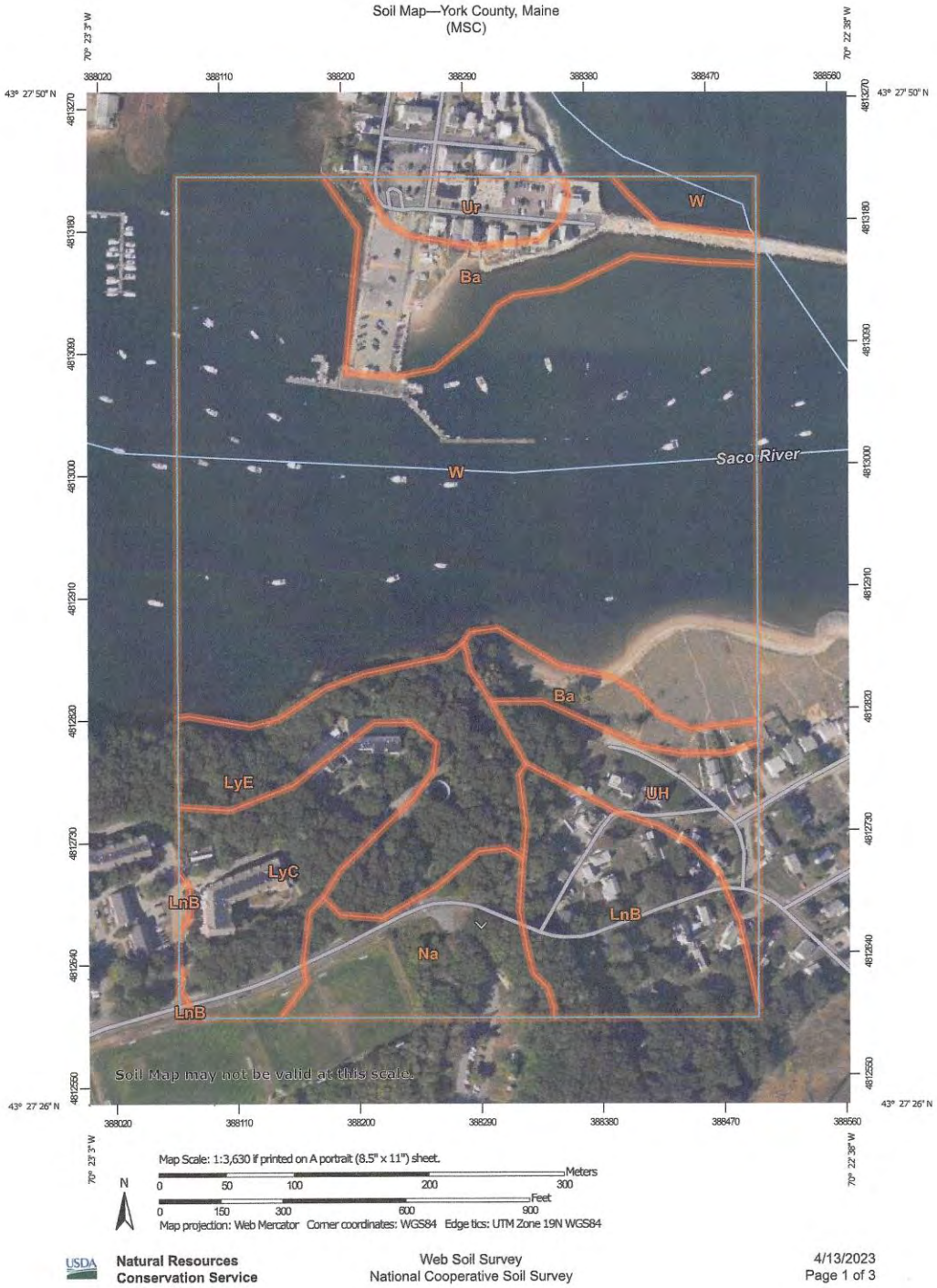

USDA Natural Resources Conservation Service

Web Soil Survey
National Cooperative Soil Survey

4/13/2023
Page 1 of 3

WETLAND SURVEY UPDATE
PROPOSED PIER MARINE SCIENCE CENTER
UNIVERSITY OF NEW ENGLAND
HILL'S BEACH ROAD, BIDDEFORD, ME.

APPENDIX - F
FLOOD MAP

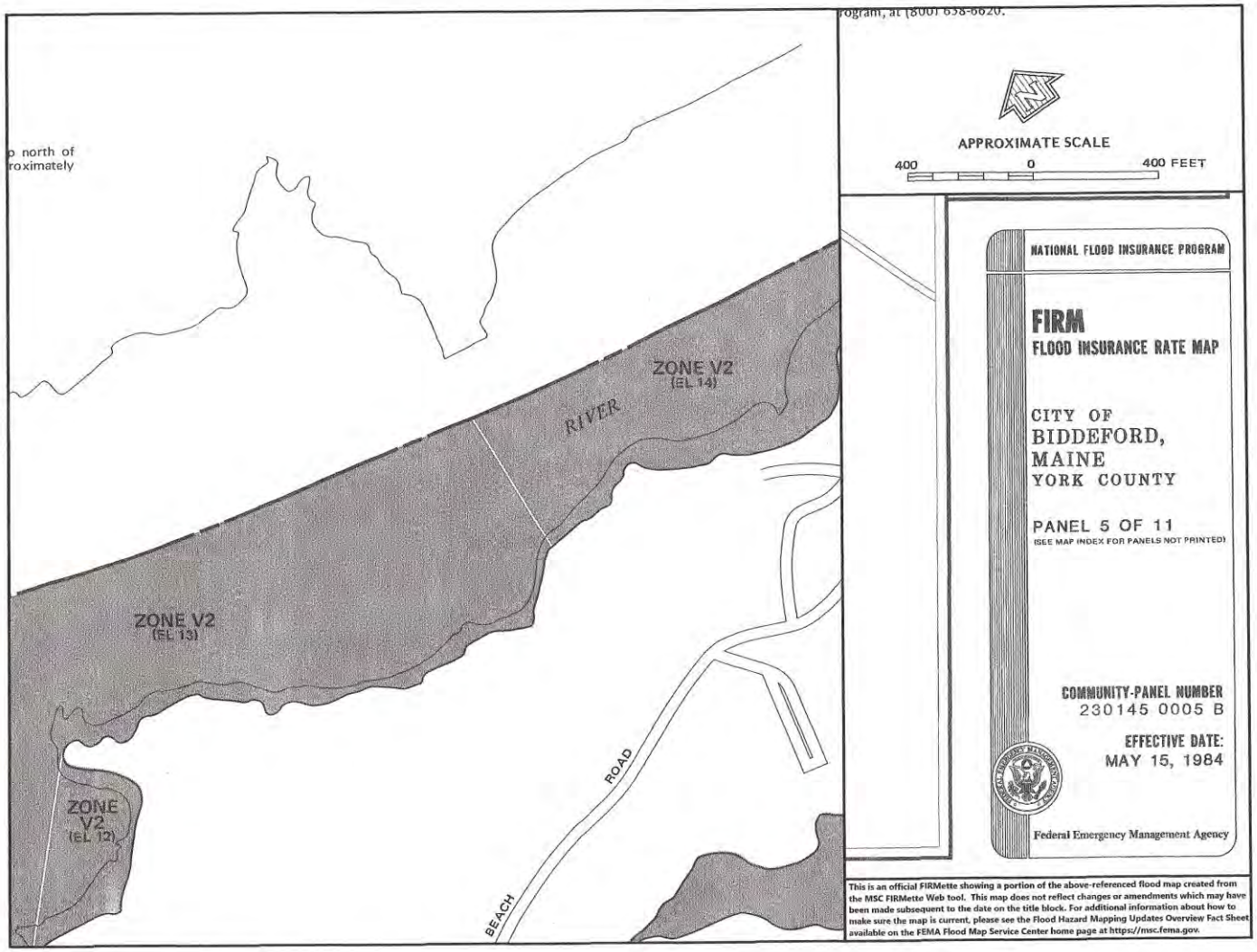
rogram, at (800) 638-6620.
o north of
roximately
APPROXIMATE SCALE
400 0 400 FEET
ZONE V2
(EL 14)
RIVER
ZONE V2
(EL 13)
ZONE
V2
(EL 12)
ROAD
BEACH
NATIONAL FLOOD INSURANCE PROGRAM
FIRM
FLOOD INSURANCE RATE MAP
CITY OF
BIDDEFORD,
MAINE
YORK COUNTY
PANEL 5 OF 11
(SEE MAP INDEX FOR PANELS NOT PRINTED)
COMMUNITY-PANEL NUMBER
230145 0005 B
EFFECTIVE DATE:
MAY 15, 1984
Federal Emergency Management Agency
This is an official FIRMette showing a portion of the above-referenced flood map created from the MSC FIRMette Web tool. This map does not reflect changes or amendments which may have been made subsequent to the date on the title block. For additional information about how to make sure the map is current, please see the Flood Hazard Mapping Updates Overview Fact Sheet available on the FEMA Flood Map Service Center home page at https://msc.fema.gov.

WETLAND SURVEY UPDATE
PROPOSED PIER MARINE SCIENCE CENTER
UNIVERSITY OF NEW ENGLAND
HILL'S BEACH ROAD, BIDDEFORD, ME.

APPENDIX - G
HIGHEST ASTRONOMICAL TIDE
MAP

Maine Geological Survey

Highest Astronomical Tide Line

To determine the estimated Highest Astronomical Tide elevation (in feet, NAVD88) and the tidal station used, simply click on coastline of interest.

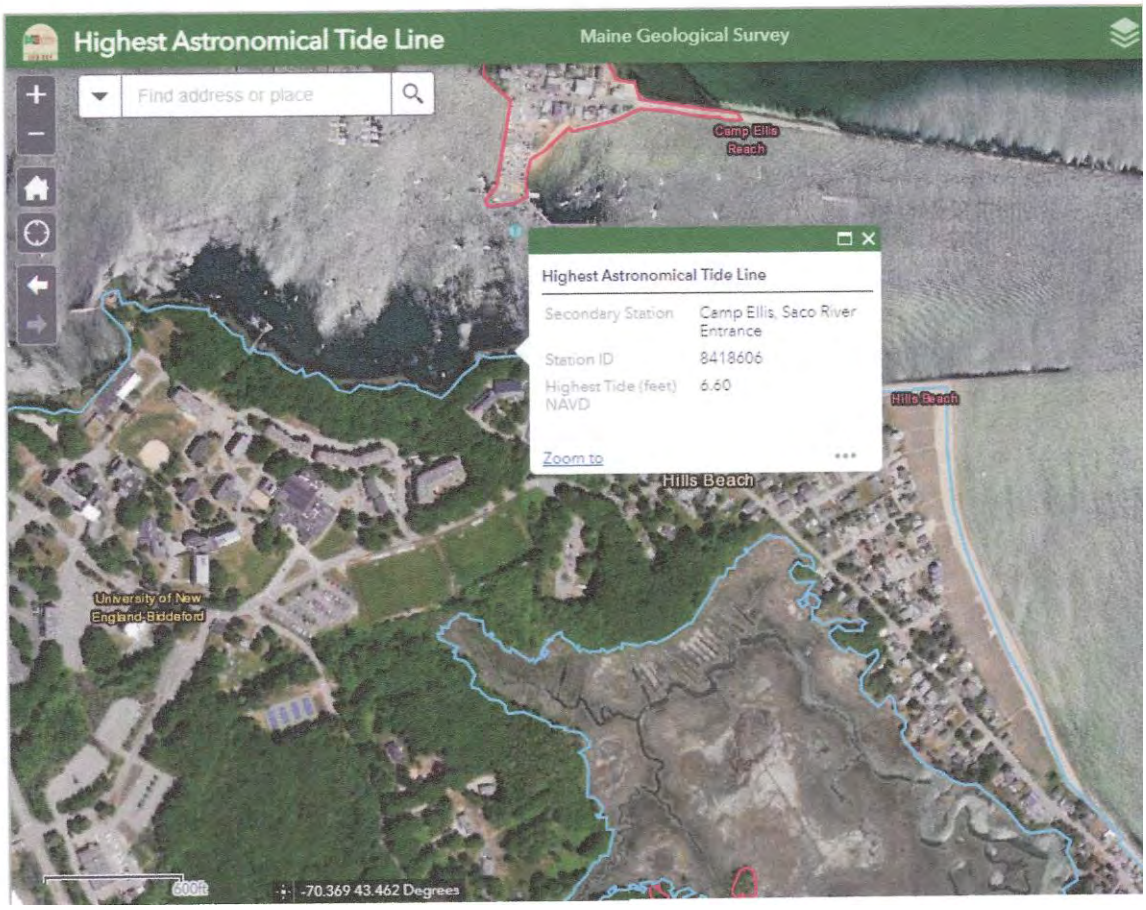

WETLAND SURVEY UPDATE
PROPOSED PIER MARINE SCIENCE CENTER
UNIVERSITY OF NEW ENGLAND
HILL'S BEACH ROAD, BIDDEFORD, ME.

APPENDIX - H
COASTAL SAND DUNE GEOLOGY



Maine Geological Survey

Address: 22 State House Station
Augusta, Maine 04333

Telephone: 207-287-2801
E-mail: mgs@maine.gov

Home page: http://www.maine.gov/doc/nrimc/nrimc.htm

See back for description of map units.

Coastal Sand Dune Geology

Hills Beach, Saco River, Biddeford, Maine

by Peter A. Slovinsky and Stephen M. Dickson

Open-File No. 11-107

2011

APPENDIX B: MDEP COASTAL WETLAND CHARACTERIZATION: INTERTIDAL & SHALLOW SUBTIDAL FIELD SURVEY CHECKLIST

NAME OF APPLICANT: UNIVERSITY NEW ENGLAND PHONE: 207 602 2253
APPLICATION TYPE: N.R.P.A.
ACTIVITY LOCATION: TOWN: BIDDEFORD COUNTY: YORK

ACTIVITY DESCRIPTION: ☐ fill ☒ pier ☐ lobster pound ☐ shoreline stabilization
☐ dredge ☐ other: PERMANENT PIER FOR RESEARCH

DATE OF SURVEY: 3/21/23 & 4/8/23 OBSERVER: DALE BREWER

TIME OF SURVEY: 7:00 - 8:15 A.M. TIDE AT SURVEY: LOW

SIZE OF DIRECT IMPACT OR FOOTPRINT (square feet):
Intertidal area: ± 1302 FT² Subtidal area: ± 5797 FT²

SIZE OF INDIRECT IMPACT, if known (square feet): ESTIMATED
Intertidal area: ± 221 FT² Subtidal area: ± 797 FT²

HABITAT TYPES PRESENT (check all that apply):
☐ sand beach ☒ boulder/cobble beach ☐ sand flat ☒ mixed coarse & fines ☐ salt marsh
☒ ledge ☒ rocky shore ☒ mudflat (sediment depth, if known: ____)

ENERGY: ☐ protected ☐ semi-protected ☐ partially exposed ☒ exposed

DRAINAGE: ☐ drains completely ☐ standing water ☐ pools ☒ stream or channel

SLOPE: ☐ >20% ☒ 10-20% ☐ 5-10% ☐ 0-5% ☐ variable

SHORELINE CHARACTER:
☒ bluff/bank (height from spring high tide: 6') ☐ beach ☒ rocky ☐ vegetated

FRESHWATER SOURCES: ☐ stream ☒ river ☐ wetland ☒ stormwater

MARINE ORGANISMS PRESENT:

	absent	occasional	common	abundant
mussels	☒	☐	☐	☐
clams	☒	☐	☐	☐
marine worms	☒	☐	☐	☐
rockweed	☐	☐	☒	☐
eelgrass	☒	☐	☐	☐
lobsters	☒	☐	☐	☐
other	☒	☐	☐	☐

SIGNS OF SHORELINE OR INTERTIDAL EROSION? ☐ yes ☒ no

PREVIOUS ALTERATIONS? ☐ yes ☒ no

CURRENT USE OF SITE AND ADJACENT UPLAND:
☒ undeveloped ☐ residential ☐ commercial ☐ degraded ☐ recreational

PLEASE SUBMIT THE FOLLOWING:
☒ Photographs ☒ Overhead drawing (pink)

ATTACHMENT 10 – NOTICE OF INTENT TO FILE

Portland Press Herald
Maine Sunday Telegram
pressherald.com

Classified Advertising Proof

Tom Saucier
Site Design Associates
23 Whitney Way

Topsham
Maine
04086
+1 (207) 449-4275

Thank you for placing your advertisement with us.

Your order information and a preview of your advertisement are attached below for your review. If there are changes or questions, please contact the classified department at (207) 791-6100

Thank you

(207) 791-6100 jjensen@mainetoday.com Monday – Friday 8:00 am – 5pm

Order Number	**0503081**	Order Price	**$458.75**
Sales Rep.	**Joan Jensen**	PO No.	**Notice of Intent to File / Tom Saucier**
Account	**30243**	Payment Type	**Invoice**

Publication	**Portland Press Herald**	Number of dates	**1**
First Run Date	**06/14/2024**	Last Run Date	**06/14/2024**

Publication	**Online Upsell PPH**	Number of dates	**1**
First Run Date	**06/14/2024**	Last Run Date	**06/14/2024**

Public Notice

NOTICE OF INTENT TO FILE

Please take notice that University of New England, 11 Hills Beach Road, Biddeford, Maine 04005 is intending to file a Natural Resources Protection Act permit application with the Maine Department of Environmental Protection pursuant

to the provisions of 38 M.R.S. §§ 480-A thru 480-BB on or about June 17, 2024. The application is for a permanent research pier with a ramp and floats at the following location: 11 Hills Beach Road, Biddeford, Maine 04005.A request for a public hearing or a request that the Board of Environmental Protection assume jurisdiction over this application must be received by the Department in writing, no later than 20 days after the application is found by the Department to be complete and is accepted for processing. A public hearing may or may not be held at the discretion of the Commissioner or Board of Environmental Protection. Public comment on the application will be accepted throughout the processing of the application. For Federally licensed, permitted, or funded activities in the Coastal Zone, review of this application shall also constitute the State's consistency review in accordance with the Maine Coastal Program pursuant to Section 307 of the federal Coastal Zone Management Act, 16 U.S.C. § 1456. The application will be filed for public inspection at the Department

of Environmental Protection's office in Portland during normal working hours. A copy of the application may also be seen at the municipal offices in Biddeford, Maine. Written public comments may be sent to the regional office in Portland where the application is filed for public inspection:

ATTACHMENT 11 – MHPC AND TRIBE LETTERS

MAINE HISTORIC PRESERVATION COMMISSION
55 CAPITOL STREET
65 STATE HOUSE STATION
AUGUSTA, MAINE
04333

JANET T. MILLS
GOVERNOR

KIRK F. MOHNEY
DIRECTOR

May 15, 2023

Mr. Tom Saucier, P.E.
Site Design Associates
23 Whitney Way
Topsham, Maine 04086

Project: MHPC# 0500-23 University of New England; 11 Hills Beach Road
Permanent Pier and Float System

Town: Biddeford, ME

Dear Mr. Saucier:

In response to your recent request, I have reviewed the information received April 13, 2023 to initiate consultation on the above referenced projects in accordance with Section 106 of the National Historic Preservation Act of 1966, as amended (NHPA).

Dr. Arthur Spiess of my staff has carefully reviewed our February 7, 2000 letter concerning areas of archaeological site significance on the UNE campus, and the Phase III report that formed the background of these recommendations. We note that some of the areas of the proposed access road and the head of the pier fall outside of the areas found not to be contributing to the overall significance of the archaeological site(s) on the UNE campus (specifically areas 99.1, 99.2 and 99.8. Moreover, the intensity of previous archaeological testing along the now-proposed access road (especially within area 99.1).

Based on the information submitted, I have concluded that the proposed work will have **no adverse effect** upon historic properties.

However, our finding is *conditional* upon the following:

1) We recommend that one or more archaeologists monitor the initial clearing of soil from the route of the access road and be allowed enough time to recover information from any subsoil features that are present. It would be most important to monitor the access road from the curve in the road to be located just east of the north wall of the marine science center to the head of the proposed pier.

Please contact Megan M. Rideout at (207) 287-2992 or megan.m.rideout@maine.gov if we can be of further assistance in this matter.

Sincerely,

Kirk F. Mohney

Kirk F. Mohney
State Historic Preservation Officer

PHONE: (207) 287-2132 FAX: (207) 287-2335


U.S. Postal Service™
CERTIFIED MAIL® RECEIPT
Domestic Mail Only
For delivery information, visit our website at www.usps.com®.
Perry, ME 04667
OFFICIAL USE
Certified Mail Fee $4.15
$3.35
0086
7
Extra Services & Fees (check box, add fee as appropriate)
Return Receipt (hardcopy) $0.00
Return Receipt (electronic) $0.00
Certified Mail Restricted Delivery $0.00
Adult Signature Required $0.00
Adult Signature Restricted Delivery $
Postage $0.87
Postmark Here
04/11/2023
Total Postag $8.37
THPO
Sent To Passamaquoddy Tribe of Indians
Street and Ap Pleasant Point Reservation
PO Box 343
City, State, Z Perry, ME 04667
PS Form 3800, April 2015 PSN 7530-02-000-9047 See Reverse for Instructions
7022 1670 0001 0356 2178

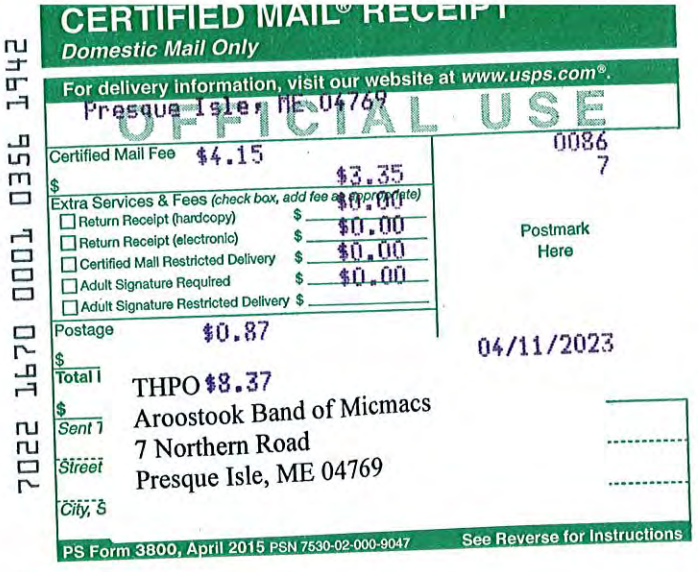
CERTIFIED MAIL® RECEIPT
Domestic Mail Only
For delivery information, visit our website at www.usps.com®.
Presque Isle, ME 04769
OFFICIAL USE
Certified Mail Fee $4.15
$3.35
0086
7
Extra Services & Fees
Return Receipt (hardcopy) $0.00
Return Receipt (electronic) $0.00
Certified Mail Restricted Delivery $0.00
Adult Signature Required $0.00
Adult Signature Restricted Delivery $
Postage $0.87
Postmark Here
04/11/2023
THPO $8.37
Aroostook Band of Micmacs
7 Northern Road
Presque Isle, ME 04769
PS Form 3800, April 2015 PSN 7530-02-000-9047 See Reverse for Instructions
7022 1670 0001 0356 1942

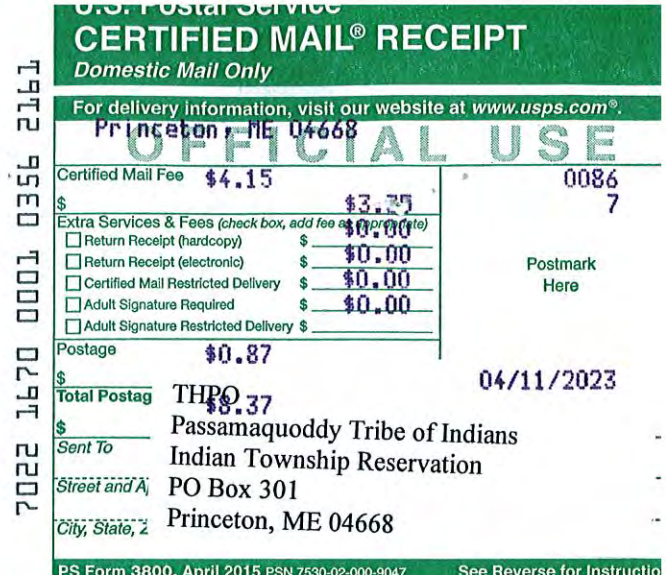
CERTIFIED MAIL® RECEIPT
Domestic Mail Only
For delivery information, visit our website at www.usps.com®.
Princeton, ME 04668
OFFICIAL USE
Certified Mail Fee $4.15
$3.35
0086
7
Extra Services & Fees
Return Receipt (hardcopy) $0.00
Return Receipt (electronic) $0.00
Certified Mail Restricted Delivery $0.00
Adult Signature Required $0.00
Adult Signature Restricted Delivery $
Postage $0.87
Postmark Here
04/11/2023
THPO $8.37
Passamaquoddy Tribe of Indians
Indian Township Reservation
PO Box 301
Princeton, ME 04668
PS Form 3800, April 2015 PSN 7530-02-000-9047 See Reverse for Instructio
7022 1670 0001 0356 2161

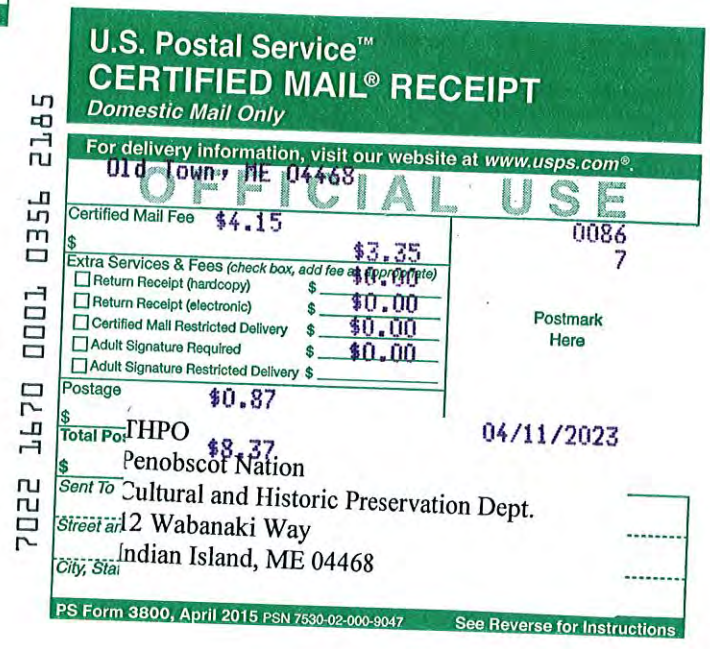
U.S. Postal Service™
CERTIFIED MAIL® RECEIPT
Domestic Mail Only
For delivery information, visit our website at www.usps.com®.
Old Town, ME 04468
OFFICIAL USE
Certified Mail Fee $4.15
$3.35
0086
7
Extra Services & Fees
Return Receipt (hardcopy) $0.00
Return Receipt (electronic) $0.00
Certified Mail Restricted Delivery $0.00
Adult Signature Required $0.00
Adult Signature Restricted Delivery $
Postage $0.87
Postmark Here
04/11/2023
Total Po $8.37
THPO
Penobscot Nation
Sent To Cultural and Historic Preservation Dept.
Street an 12 Wabanaki Way
City, Sta Indian Island, ME 04468
PS Form 3800, April 2015 PSN 7530-02-000-9047 See Reverse for Instructions
7022 1670 0001 0356 2185

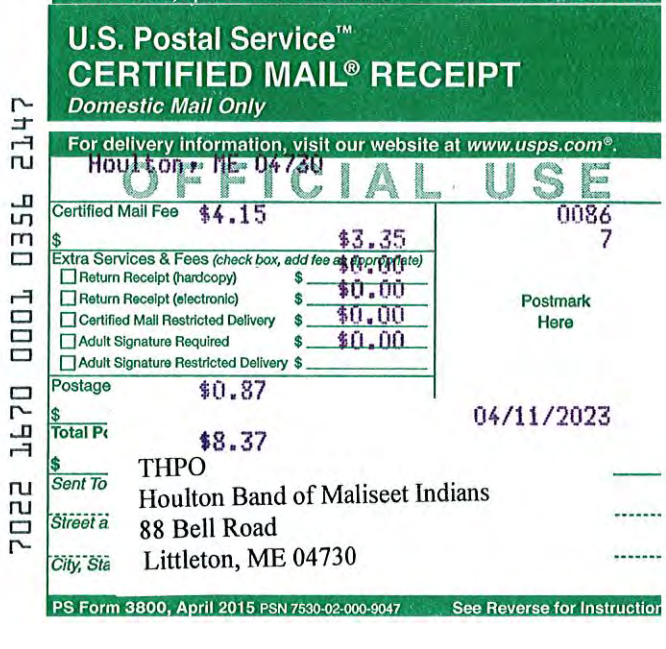
U.S. Postal Service™
CERTIFIED MAIL® RECEIPT
Domestic Mail Only
For delivery information, visit our website at www.usps.com®.
Houlton, ME 04730
OFFICIAL USE
Certified Mail Fee $4.15
$3.35
0086
7
Extra Services & Fees
Return Receipt (hardcopy) $0.00
Return Receipt (electronic) $0.00
Certified Mail Restricted Delivery $0.00
Adult Signature Required $0.00
Adult Signature Restricted Delivery $
Postage $0.87
Postmark Here
04/11/2023
Total Pc $8.37
THPO
Houlton Band of Maliseet Indians
Street a 88 Bell Road
City, Sta Littleton, ME 04730
PS Form 3800, April 2015 PSN 7530-02-000-9047 See Reverse for Instruction
7022 1670 0001 0356 2147

Site Design Associates
Consulting Engineering and Land Planning

April 10, 2023

THPO and Environmental Planner
Houlton Band of Maliseet Indians
88 Bell Road
Littleton, Maine 04730

RE: Proposed Marine Science Center Pier
11 Hills Beach Road
Biddeford, Maine

On behalf of our client, University of New England (UNE), we are assisting with the preparation of Maine Department of Environmental Protection Natural Resources Protection Act and U.S. Army Corps of Engineers Permit applications. The applications are for the installation of a permanent pier and float system on UNE's campus at 11 Hills Beach Road in Biddeford.

This letter and the enclosed materials serve as a means to notify you of the project and give you an opportunity to determine whether the proposed development would affect properties of religious and/or cultural significance. If the Tribe has concerns in this area, please notify us by letter to the address below, contact me at 207-449-4275 or via email at tsaucier@sitedesignassociates.biz.

Thank you for your assistance and the generosity of your time to review this project in reference to the Tribe's concerns.

Sincerely,

Site Design Associates

Tom Saucier, P.E.
President

Enclosures

23 Whitney Way Topsham, Maine 04086
Phone: (207) 449-4275 email: info@sitedesignassociates.biz

Site Design Associates
Consulting Engineering and Land Planning

April 10, 2023

THPO
Aroostook Band of Micmacs
7 Northern Road
Presque Isle, ME 04769

RE: Proposed Marine Science Center Pier
11 Hills Beach Road
Biddeford, Maine

On behalf of our client, University of New England (UNE), we are assisting with the preparation of Maine Department of Environmental Protection Natural Resources Protection Act and U.S. Army Corps of Engineers Permit applications. The applications are for the installation of a permanent pier and float system on UNE's campus at 11 Hills Beach Road in Biddeford.

This letter and the enclosed materials serve as a means to notify you of the project and give you an opportunity to determine whether the proposed development would affect properties of religious and/or cultural significance. If the Tribe has concerns in this area, please notify us by letter to the address below, contact me at 207-449-4275 or via email at tsaucier@sitedesignassociates.biz.

Thank you for your assistance and the generosity of your time to review this project in reference to the Tribe's concerns.

Sincerely,

Site Design Associates

Tom Saucier, P.E.
President

Enclosures

23 Whitney Way Topsham, Maine 04086
Phone: (207) 449-4275 email: info@sitedesignassociates.biz

Site Design Associates
Consulting Engineering and Land Planning

April 10, 2023

THPO
Passamaquoddy Tribe of Indians
Pleasant Point Reservation
PO Box 343
Perry, Maine 04667

RE: Proposed Marine Science Center Pier
11 Hills Beach Road
Biddeford, Maine

On behalf of our client, University of New England (UNE), we are assisting with the preparation of Maine Department of Environmental Protection Natural Resources Protection Act and U.S. Army Corps of Engineers Permit applications. The applications are for the installation of a permanent pier and float system on UNE's campus at 11 Hills Beach Road in Biddeford.

This letter and the enclosed materials serve as a means to notify you of the project and give you an opportunity to determine whether the proposed development would affect properties of religious and/or cultural significance. If the Tribe has concerns in this area, please notify us by letter to the address below, contact me at 207-449-4275 or via email at tsaucier@sitedesignassociates.biz.

Thank you for your assistance and the generosity of your time to review this project in reference to the Tribe's concerns.

Sincerely,

Site Design Associates

Tom Saucier, P.E.
President

Enclosures

23 Whitney Way Topsham, Maine 04086
Phone: (207) 449-4275 email: info@sitedesignassociates.biz

Site Design Associates
Consulting Engineering and Land Planning

April 10, 2023

THPO
Passamaquoddy Tribe of Indians
Indian Township Reservation
PO Box 301
Princeton, Maine 04668

RE: Proposed Marine Science Center Pier
11 Hills Beach Road
Biddeford, Maine

On behalf of our client, University of New England (UNE), we are assisting with the preparation of Maine Department of Environmental Protection Natural Resources Protection Act and U.S. Army Corps of Engineers Permit applications. The applications are for the installation of a permanent pier and float system on UNE's campus at 11 Hills Beach Road in Biddeford.

This letter and the enclosed materials serve as a means to notify you of the project and give you an opportunity to determine whether the proposed development would affect properties of religious and/or cultural significance. If the Tribe has concerns in this area, please notify us by letter to the address below, contact me at 207-449-4275 or via email at tsaucier@sitedesignassociates.biz.

Thank you for your assistance and the generosity of your time to review this project in reference to the Tribe's concerns.

Sincerely,

Site Design Associates

Tom Saucier, P.E.
President

Enclosures

23 Whitney Way Topsham, Maine 04086
Phone: (207) 449-4275 email: info@sitedesignassociates.biz

Site Design Associates
Consulting Engineering and Land Planning

April 10, 2023

THPO
Penobscot Nation
Cultural and Historic Preservation Dept.
12 Wabanaki Way
Indian Island, Maine 04468

RE: Proposed Marine Science Center Pier
11 Hills Beach Road
Biddeford, Maine

On behalf of our client, University of New England (UNE), we are assisting with the preparation of Maine Department of Environmental Protection Natural Resources Protection Act and U.S. Army Corps of Engineers Permit applications. The applications are for the installation of a permanent pier and float system on UNE's campus at 11 Hills Beach Road in Biddeford.

This letter and the enclosed materials serve as a means to notify you of the project and give you an opportunity to determine whether the proposed development would affect properties of religious and/or cultural significance. If the Tribe has concerns in this area, please notify us by letter to the address below, contact me at 207-449-4275 or via email at tsaucier@sitedesignassociates.biz.

Thank you for your assistance and the generosity of your time to review this project in reference to the Tribe's concerns.

Sincerely,

Site Design Associates

Tom Saucier, P.E.
President

Enclosures

23 Whitney Way Topsham, Maine 04086
Phone: (207) 449-4275 email: info@sitedesignassociates.biz

PENOBSCOT NATION
CULTURAL & HISTORIC PRESERVATION
12 WABANAKI WAY, INDIAN ISLAND, ME 04468

CHRIS SOCKALEXIS – TRIBAL HISTORIC PRESERVATION OFFICER
E-MAIL: chris.sockalexis@penobscotnation.org

NAME	Tom Saucier
ADDRESS	Site Design Associates 23 Whitney Way Topsham, ME 04086
OWNER'S NAME	University of New England
TELEPHONE	201-449-4275
EMAIL	tsaucier@sitedesignassociates.biz
PROJECT NAME	Marine Science Center Pier – 11 Hills Beach Road
PROJECT SITE	Biddeford, ME
DATE OF REQUEST	April 10, 2023
DATE REVIEWED	October 19, 2023

Thank you for the opportunity to comment on the above referenced project. This project appears to have no impact on a structure or site of historic, architectural or archaeological significance to the Penobscot Nation as defined by the National Historic Preservation Act of 1966, as amended.

If there is an inadvertent discovery of Native American cultural materials during the course of the project, please contact my office at (207) 817-7471. Thank you for consulting with the Penobscot Nation Tribal Historic Preservation Office with this project.

Chris Sockalexis, THPO
Penobscot Nation

ATTACHMENT 12 – MDEP VISUAL EVALUATION FIELD SURVEY CHECKLIST APPENDIX A

APPENDIX A: MDEP VISUAL EVALUATION
FIELD SURVEY CHECKLIST
(Natural Resources Protection Act, 38 M.R.S. §§ 480 A - Z)

Name of applicant: University of New England Phone: 207-602-2365

Application Type: NRPA

Activity Type: (brief activity description) Pier, gangway and float

Activity Location: Town: Biddeford County: York

GIS Coordinates, if known: _____ _____

Date of Survey: 05/01/23 Observer: Tom Saucier Phone: 207-449-4275

1. Would the activity be visible from:	Distance Between the Proposed Visibility Activity and Resource (in Miles) 0-¼	¼-1	1+
A. A National Natural Landmark or other outstanding natural feature?	☐	☐	☒
B. A State or National Wildlife Refuge, Sanctuary, or Preserve or a State Game Refuge?	☐	☐	☒
C. A state or federal trail?	☐	☐	☒
D. A public site or structure listed on the National Register of Historic Places?	☐	☐	☒
E. A National or State Park?	☐	☐	☒
F. 1) A municipal park or public open space?	☐	☐	☒
2) A publicly owned land visited, in part, for the use, observation, enjoyment and appreciation of natural or man-made visual qualities?	☐	☐	☒
3) A public resource, such as the Atlantic Ocean, a great pond or a navigable river?	☒	☐	☐
2. What is the closest estimated distance to a similar activity?	☒	☐	☐
3. What is the closest distance to a public facility intended for a similar use?	☐	☐	☒

4. Is the visibility of the activity seasonal? ☐Yes ☒No
(i.e., screened by summer foliage, but visible during other seasons)

5. Are any of the resources checked in question 1 used by the public during the time of year during which the activity will be visible? ☒Yes ☐No

A listing of National Natural Landmarks and other outstanding natural features in the State of Maine can be found at: www.nature.nps.gov/nnl/Registry/USA_map/states/Maine/maine.htm . In addition, unique natural areas are listed in the Maine Atlas and Gazetteer published by DeLorme.

(pink)

ATTACHMENT 13 – PROJECT DESCRIPTION WORKSHEET APPENDIX D

Natural Resource Protection Act Application

APPENDIX D: Project Description Worksheet for a Dock, Pier or Wharf Application.

Help us process your application more efficiently by completing this worksheet, which is supplemental to a NRPA application for a dock, pier or wharf. A completed Appendix D may be substituted for Block 14 of the application page.

THIS IS AN APPLICATION FOR A.....

☐ Commercial wharf

If yes, indicate type of commercial activity: _____

License number: _____

Number of fishermen using this wharf: _____

☐ Public pier, dock or wharf

☐ Common or shared recreational pier, dock or wharf

☐ Private recreational pier, dock or wharf

☐ Expansion or modification of an existing structure

☒ Other, please indicate: Research pier, gangway, and floats

TELL US ABOUT YOUR BOAT....

My boat(s) requires a draft of up to 5 feet.

My boat(s) is 60' max feet long.

TELL US ABOUT YOUR PROJECT SITE.... For coastal piers and wharves, please complete Appendix B of the NRPA application. For freshwater docks, please describe the substrate and any vegetation: See appendix B

SCENIC CONSIDERATIONS... Please complete Appendix A of the NRPA application.

WHAT FACILITIES ARE NEARBY?

The nearest public boat launch is located in Biddeford (town) approximately 2 (distance) miles from the project location.

The nearest public, commercial, or private marina is located in Saco (town) approximately 0.04 (distance) miles from the project location.

☐ I have inquired about slip or mooring availability at the nearest marina or public facility.

☐ Yes, a slip or mooring is available. ☐ No, a slip or mooring is not available.

Approximate expected time on waiting list: _____

☒ I have contacted the local Harbor Master.

Name: University of New England Phone: 207-602-2365

I currently use the following for my boat: ☐ Mooring ☐ Marina



TELL US ABOUT YOUR PROPOSED PIER, DOCK OR WHARF...

MATERIALS:

☒ The structure will be supported by pilings.
14 pilings of 24 inches in diameter
and 11 pilings of 16 inches in diameter

☐ The structure will be supported by stacked, flow-through granite cribs.
_____ blocks, measuring _____ feet by _____ feet

☐ The structure will be supported by solid fill.
_____ square feet of solid fill

☒ Other: (30) 12" diameter timber fender piles will be installed around perimeter of pier head, and (1) 10.75" diameter steel pile will support the outer side of the gangway lifting gantry

DIMENSIONS:

Length of fixed section: Refer to plans.
Width of fixed section: Pier head 23'-4" x 80'-0"
Length of ramp: Pier approach 123'+/- x 14'-0" to 23'-4"
Dimensions of float: 80 feet
Refer to plans. (1) 12'x30', (1) 8'x24', (1) 8'x26'-10", (1) 6'x20'
Distance the structure will extend below mean low water (MLW): +/-115 feet
Depth of water at the fixed end of the structure: +/-5 to 6 feet
Depth of water at the float at low tide: +/-3.5 to 5 feet
Depth of water at the float at high tide: +/-13.2 to 14.7 feet
Dimensions of any proposed buildings (e.g. bait shed):
<12 feet high by 8 feet wide by 12 feet long storage shed
<20 feet high by 16 feet wide by 30 feet long outdoor covered classroom

ACCESS:

During construction, my project site will be accessed via:

☒ Land

☐ Beach/intertidal area

☒ Water/barge

ATTACHMENT 14 – Species List, MA Consistency Letter, and Correspondence with USFW regarding the Northern Long-eared Bat.

United States Department of the Interior

FISH AND WILDLIFE SERVICE
Maine Ecological Services Field Office
P. O. Box A
East Orland, ME 04431
Phone: (207) 469-7300 Fax: (207) 902-1588

In Reply Refer To: 04/03/2024 12:50:39 UTC
Project Code: 2023-0081325
Project Name: University of New England Pier Revised

Subject: List of threatened and endangered species that may occur in your proposed project location or may be affected by your proposed project

To Whom It May Concern:

The enclosed species list identifies threatened, endangered, proposed, and candidate species, as well as proposed and final designated critical habitat, that may occur within the boundary of your proposed project and/or may be affected by your proposed project. The species list fulfills the requirements of the U.S. Fish and Wildlife Service (Service) under section 7(c) of the Endangered Species Act (Act) of 1973, as amended (16 U.S.C. 1531 *et seq.*).

New information based on updated surveys, changes in the abundance and distribution of species, changed habitat conditions, or other factors could change this list. Please feel free to contact us if you need more current information or assistance regarding the potential impacts to federally proposed, listed, and candidate species and federally designated and proposed critical habitat. Please note that under 50 CFR 402.12(e) of the regulations implementing section 7 of the Act, the accuracy of this species list should be verified after 90 days. This verification can be completed formally or informally as desired. The Service recommends that verification be completed by visiting the IPaC website at regular intervals during project planning and implementation for updates to species lists and information. An updated list may be requested through IPaC by completing the same process used to receive the enclosed list.

The purpose of the Act is to provide a means whereby threatened and endangered species and the ecosystems upon which they depend may be conserved. Under sections 7(a)(1) and 7(a)(2) of the Act and its implementing regulations (50 CFR 402 *et seq.*), Federal agencies are required to utilize their authorities to carry out programs for the conservation of threatened and endangered species and to determine whether projects may affect threatened and endangered species and/or designated critical habitat.

A Biological Assessment is required for construction projects (or other undertakings having similar physical impacts) that are major Federal actions significantly affecting the quality of the human environment as defined in the National Environmental Policy Act (42 U.S.C. 4332(2)(c)). For projects other than major construction activities, the Service suggests that a biological

evaluation similar to a Biological Assessment be prepared to determine whether the project may affect listed or proposed species and/or designated or proposed critical habitat. Recommended contents of a Biological Assessment are described at 50 CFR 402.12.

If a Federal agency determines, based on the Biological Assessment or biological evaluation, that listed species and/or designated critical habitat may be affected by the proposed project, the agency is required to consult with the Service pursuant to 50 CFR 402. In addition, the Service recommends that candidate species, proposed species and proposed critical habitat be addressed within the consultation. More information on the regulations and procedures for section 7 consultation, including the role of permit or license applicants, can be found in the "Endangered Species Consultation Handbook" at: https://www.fws.gov/sites/default/files/documents/endangered-species-consultation-handbook.pdf

Migratory Birds: In addition to responsibilities to protect threatened and endangered species under the Endangered Species Act (ESA), there are additional responsibilities under the Migratory Bird Treaty Act (MBTA) and the Bald and Golden Eagle Protection Act (BGEPA) to protect native birds from project-related impacts. Any activity, intentional or unintentional, resulting in take of migratory birds, including eagles, is prohibited unless otherwise permitted by the U.S. Fish and Wildlife Service (50 C.F.R. Sec. 10.12 and 16 U.S.C. Sec. 668(a)). For more information regarding these Acts, see Migratory Bird Permit | What We Do | U.S. Fish & Wildlife Service (fws.gov).

The MBTA has no provision for allowing take of migratory birds that may be unintentionally killed or injured by otherwise lawful activities. It is the responsibility of the project proponent to comply with these Acts by identifying potential impacts to migratory birds and eagles within applicable NEPA documents (when there is a federal nexus) or a Bird/Eagle Conservation Plan (when there is no federal nexus). Proponents should implement conservation measures to avoid or minimize the production of project-related stressors or minimize the exposure of birds and their resources to the project-related stressors. For more information on avian stressors and recommended conservation measures, see https://www.fws.gov/library/collections/threats-birds.

In addition to MBTA and BGEPA, Executive Order 13186: *Responsibilities of Federal Agencies to Protect Migratory Birds*, obligates all Federal agencies that engage in or authorize activities that might affect migratory birds, to minimize those effects and encourage conservation measures that will improve bird populations. Executive Order 13186 provides for the protection of both migratory birds and migratory bird habitat. For information regarding the implementation of Executive Order 13186, please visit https://www.fws.gov/partner/council-conservation-migratory-birds.

We appreciate your concern for threatened and endangered species. The Service encourages Federal agencies to include conservation of threatened and endangered species into their project planning to further the purposes of the Act. Please include the Consultation Code in the header of this letter with any request for consultation or correspondence about your project that you submit to our office.

Attachment(s):

- Official Species List

OFFICIAL SPECIES LIST

This list is provided pursuant to Section 7 of the Endangered Species Act, and fulfills the requirement for Federal agencies to "request of the Secretary of the Interior information whether any species which is listed or proposed to be listed may be present in the area of a proposed action".

This species list is provided by:

Maine Ecological Services Field Office
P. O. Box A
East Orland, ME 04431
(207) 469-7300

PROJECT SUMMARY

Project Code: 2023-0081325
Project Name: University of New England Pier Revised
Project Type: Boatlift/Boathouse/Dock/Pier/Piles - New Construction
Project Description: The project involves construction of a permanent pier on the Saco River and an access road to support the University of New England Marine Sciences program. The project will involve clearing approximately 0.3 acres of mixed forested upland and disturbance of 85 square feet intertidal and deep water habitat for pier piles.

Project Location:

The approximate location of the project can be viewed in Google Maps: https://www.google.com/maps/@43.4599768,-70.38240099961078,14z



Counties: York County, Maine

ENDANGERED SPECIES ACT SPECIES

There is a total of 6 threatened, endangered, or candidate species on this species list.

Species on this list should be considered in an effects analysis for your project and could include species that exist in another geographic area. For example, certain fish may appear on the species list because a project could affect downstream species.

IPaC does not display listed species or critical habitats under the sole jurisdiction of NOAA Fisheries[1], as USFWS does not have the authority to speak on behalf of NOAA and the Department of Commerce.

See the "Critical habitats" section below for those critical habitats that lie wholly or partially within your project area under this office's jurisdiction. Please contact the designated FWS office if you have questions.

---

1. NOAA Fisheries, also known as the National Marine Fisheries Service (NMFS), is an office of the National Oceanic and Atmospheric Administration within the Department of Commerce.

MAMMALS

NAME	STATUS
Northern Long-eared Bat *Myotis septentrionalis* No critical habitat has been designated for this species. Species profile: https://ecos.fws.gov/ecp/species/9045	Endangered
Tricolored Bat *Perimyotis subflavus* No critical habitat has been designated for this species. Species profile: https://ecos.fws.gov/ecp/species/10515	Proposed Endangered

BIRDS

NAME	STATUS
Piping Plover *Charadrius melodus* Population: [Atlantic Coast and Northern Great Plains populations] - Wherever found, except those areas where listed as endangered. There is **final** critical habitat for this species. Your location does not overlap the critical habitat. Species profile: https://ecos.fws.gov/ecp/species/6039	Threatened
Roseate Tern *Sterna dougallii dougallii* Population: Northeast U.S. nesting population No critical habitat has been designated for this species. Species profile: https://ecos.fws.gov/ecp/species/2083	Endangered
Rufa Red Knot *Calidris canutus rufa* There is **proposed** critical habitat for this species. Species profile: https://ecos.fws.gov/ecp/species/1864	Threatened

INSECTS

NAME	STATUS
Monarch Butterfly *Danaus plexippus* No critical habitat has been designated for this species. Species profile: https://ecos.fws.gov/ecp/species/9743	Candidate

CRITICAL HABITATS

THERE ARE NO CRITICAL HABITATS WITHIN YOUR PROJECT AREA UNDER THIS OFFICE'S JURISDICTION.

YOU ARE STILL REQUIRED TO DETERMINE IF YOUR PROJECT(S) MAY HAVE EFFECTS ON ALL ABOVE LISTED SPECIES.

IPAC USER CONTACT INFORMATION

Agency: Department of Commerce
Name: Ian Broadwater
Address: 18 Grand Street
City: South Portland
State: ME
Zip: 04106
Email ian@broadwaterenvironmental.com
Phone: 2075239029

LEAD AGENCY CONTACT INFORMATION

Lead Agency: Department of Commerce

United States Department of the Interior

FISH AND WILDLIFE SERVICE
Maine Ecological Services Field Office
P. O. Box A
East Orland, ME 04431
Phone: (207) 469-7300 Fax: (207) 902-1588

In Reply Refer To: May 12, 2023
Project code: 2023-0081325
Project Name: University of New England Pier Revised

Federal Nexus: yes
Federal Action Agency (if applicable): Department of Commerce

Subject: Technical assistance for 'University of New England Pier Revised'

Dear Ian Broadwater:

This letter records your determination using the Information for Planning and Consultation (IPaC) system provided to the U.S. Fish and Wildlife Service (Service) on May 12, 2023, for “University of New England Pier Revised” (here forward, Project). This project has been assigned Project Code 2023-0081325 and all future correspondence should clearly reference this number.

The Service developed the IPaC system and associated species’ determination keys in accordance with the Endangered Species Act of 1973 (ESA; 87 Stat. 884, as amended; 16 U.S.C. 1531 et seq.) and based on a standing analysis. All information submitted by the Project proponent into the IPaC must accurately represent the full scope and details of the Project. Failure to accurately represent or implement the Project as detailed in IPaC or the Northeast Determination Key (Dkey), invalidates this letter. To make a no effect determination, the full scope of the proposed project implementation (action) should not have any effects (either positive or negative effect(s)), to a federally listed species or designated critical habitat.

Effects of the action are all consequences to listed species or critical habitat that are caused by the proposed action, including the consequences of other activities that are caused by the proposed action. A consequence is caused by the proposed action if it would not occur but for the proposed action and it is reasonably certain to occur. Effects of the action may occur later in time and may include consequences occurring outside the immediate area involved in the action. (See § 402.17). Under Section 7 of the ESA, if a federal action agency makes a no effect determination, no further consultation with, or concurrence from, the Service is required (ESA §7). If a proposed Federal action may affect a listed species or designated critical habitat, formal consultation is required (except when the Service concurs, in writing, that a proposed action "is

not likely to adversely affect (NLAA)" listed species or designated critical habitat [50 CFR §402.02, 50 CFR§402.13]).

The IPaC results indicated the following species is (are) potentially present in your project area and, based on your responses to the Service's Northeast DKey, you determined the proposed Project will have the following effect determinations:

Species	Listing Status	Determination
Piping Plover (*Charadrius melodus*)	Threatened	No effect
Red Knot (*Calidris canutus rufa*)	Threatened	No effect
Roseate Tern (*Sterna dougallii dougallii*)	Endangered	May affect

Consultation with the Service is not complete. Further consultation or coordination with the Service is necessary for those species or designated critical habitats with a determination of "May Affect". Please contact our Maine Ecological Services Field Office to discuss methods to avoid or minimize potential adverse effects to those species or designated critical habitats.

In addition to the species listed above, the following species and/or critical habitats may also occur in your project area and are not covered by this conclusion:

- Monarch Butterfly *Danaus plexippus* Candidate
- Northern Long-eared Bat *Myotis septentrionalis* Endangered

Please Note: If the Action may impact bald or golden eagles, additional coordination with the Service under the Bald and Golden Eagle Protection Act (BGEPA) (54 Stat. 250, as amended, 16 U.S.C. 668a-d) by the prospective permittee may be required. Please contact the Migratory Birds Permit Office, (413) 253-8643, or PermitsR5MB@fws.gov, with any questions regarding potential impacts to Eagles.

If you have any questions regarding this letter or need further assistance, please contact the Maine Ecological Services Field Office and reference the Project Code associated with this Project.

Action Description
You provided to IPaC the following name and description for the subject Action.

1. Name

University of New England Pier Revised

2. Description

The following description was provided for the project 'University of New England Pier Revised':

> The project involves construction of a permanent pier on the Saco River and an access road to support the University of New England Marine Sciences program. The project will involve clearing approximately 0.3 acres of mixed forested upland and disturbance of 85 square feet intertidal and deep water habitat for pier piles.

The approximate location of the project can be viewed in Google Maps: https://www.google.com/maps/@43.4599768,-70.38240099961078,14z



QUALIFICATION INTERVIEW

1. As a representative of this project, do you agree that all items submitted represent the complete scope of the project details and you will answer questions truthfully?

   Yes

2. Does the proposed project include, or is it reasonably certain to cause, intentional take of listed species?

   Note: This question could refer to research, direct species management, surveys, and/or studies that include intentional handling/encountering, harassment, collection, or capturing of any individual of a federally listed threatened, endangered, or proposed species.

   No

3. Is the action authorized, permitted, licensed, funded, or being carried out by a Federal agency in whole or in part?

   Yes

4. Is the Federal Highway Administration (FHWA), Federal Railroad Administration (FRA), or Federal Transit Administration (FTA) the lead agency for this project?

   No

5. Are you including in this analysis all impacts to federally listed species that may result from the entirety of the project (not just the activities under federal jurisdiction)?

   Note: If there are project activities that will impact listed species that are considered to be outside of the jurisdiction of the federal action agency submitting this key, contact your local Ecological Services Field Office to determine whether it is appropriate to use this key. If your Ecological Services Field Office agrees that impacts to listed species that are outside the federal action agency's jurisdiction will be addressed through a separate process, you can answer yes to this question and continue through the key.

   Yes

6. Are you the lead federal action agency or designated non-federal representative requesting concurrence on behalf of the lead Federal Action Agency?

   Yes

7. Is the lead federal action agency the Environmental Protection Agency (EPA) or Federal Communications Commission (FCC)?

   No

8. Will the proposed project involve the use of herbicide where listed species are present?

   No

9. Are there any caves or anthropogenic features suitable for hibernating or roosting bats within the area expected to be impacted by the project?

   No

10. Does any component of the project associated with this action include structures that may pose a collision risk to **birds** (e.g., land-based or offshore wind turbines, communication towers, high voltage transmission lines, any type of towers with or without guy wires)?

    Note: For federal actions, answer ‘yes’ if the construction or operation of wind power facilities is either (1) part of the federal action or (2) would not occur but for a federal agency action (federal permit, funding, etc.).

    No

11. Does any component of the project associated with this action include structures that may pose a collision risk to **bats** (e.g., land-based wind turbines)?

    Note: For federal actions, answer ‘yes’ if the construction or operation of wind power facilities is either (1) part of the federal action or (2) would not occur but for a federal agency action (federal permit, funding, etc.).

    No

12. Will the proposed project result in permanent changes to water quantity in a stream or temporary changes that would be sufficient to result in impacts to listed species?

    For example, will the proposed project include any activities that would alter stream flow, such as water withdrawal, hydropower energy production, impoundments, intake structures, diversion structures, and/or turbines? Projects that include temporary and limited water reductions that will not displace listed species or appreciably change water availability for listed species (e.g. listed species will experience no changes to feeding, breeding or sheltering) can answer "No". Note: This question refers only to the amount of water present in a stream, other water quality factors, including sedimentation and turbidity, will be addressed in following questions.

    No

13. Will the proposed project affect wetlands where listed species are present?

    This includes, for example, project activities within wetlands, project activities within 300 feet of wetlands that may have impacts on wetlands, water withdrawals and/or discharge of contaminants (even with a NPDES).

    Yes

14. Will the proposed project activities (including upland project activities) occur within 0.5 miles of the water's edge of a stream or tributary of a stream where listed species may be present?

    Yes

15. Will the proposed project directly affect a streambed (below ordinary high water mark (OHWM)) of the stream or tributary where listed species may be present?

    Yes

16. Will the proposed project bore underneath (directional bore or horizontal directional drill) a stream where listed species may be present?

    No

17. Will the proposed project involve a new point source discharge into a stream or change an existing point source discharge (e.g., outfalls; leachate ponds) where listed species may be present?

    No

18. Will the proposed project involve the removal of excess sediment or debris, dredging or in-stream gravel mining where listed species may be present?

    No

19. Will the proposed project involve the creation of a new water-borne contaminant source where listed species may be present?

    Note New water-borne contaminant sources occur through improper storage, usage, or creation of chemicals. For example: leachate ponds and pits containing chemicals that are not NSF/ANSI 60 compliant have contaminated waterways. Sedimentation will be addressed in a separate question.

    No

20. Will the proposed project involve perennial stream loss, in a stream of tributary of a stream where listed species may be present, that would require an individual permit under 404 of the Clean Water Act?

    No

21. Will the proposed project involve blasting where listed species may be present?

    No

22. Will the proposed project include activities that could result in an increase to recreational fishing or potentially affect fish movement temporarily or permanently (including fish stocking, harvesting, or creation of barriers to fish passage)?

    No

23. Will the proposed project involve earth moving that could cause erosion and sedimentation, and/or contamination along a stream or tributary of a stream where listed species may be present?

    NoteAnswer "Yes" to this question if erosion and sediment control measures will be used to protect the stream.

    Yes

24. Will the proposed project involve vegetation removal within 200 feet of a perennial stream bank where listed species may be present?

    Yes

25. Will erosion and sedimentation control Best Management Practices (BMPs) associated with applicable state and/or Federal permits, be applied to the project? If BMPs have been provided by and/or coordinated with and approved by the appropriate Ecological Services Field Office, answer "Yes" to this question.

    Yes

26. Will the proposed project result in changes to beach dynamics that may modify formation of habitat over time?

    Note: Examples of projects that result in changes to beach dynamics include 1) construction of offshore breakwaters and groins; 2) mining of sand from an updrift ebb tidal delta; 3) removing or adding beach sands; and 4) projects that stabilize dunes (including placement of sand fences or planting vegetation).

    No

27. [Hidden Semantic] Is the project area located within the piping plover AOI?

    Automatically answered
    Yes

28. If you have determined that the piping plover is unlikely to occur within your project's action area or that your project is unlikely to have any potential effects on the piping plover, you may wish to make a "no effect" determination for the piping plover. Additional guidance on how to make this decision can be found in the project review section of your local Ecological Services Field Office's website. CBFO: https://www.fws.gov/office/chesapeake-bay-ecological-services/project-review ; MEFO: https://www.fws.gov/office/maine-ecological-services ; NJFO: https://www.fws.gov/office/new-jersey-ecological-services/new-jersey-field-office-project-review-guide ; NEFO: https://www.fws.gov/office/new-england-ecological-services/endangered-species-project-review#Step5 ; WVFO: https://www.fws.gov/office/west-virginia-ecological-services/project-planning. If you are unsure, answer "No" and continue through the key.

    Would you like to make a no effect determination for the piping plover?

    Yes

29. [Hidden Semantic] Is the project area located within the piping plover AOI?

    Automatically answered
    Yes

30. [Hidden Semantic] Is the project area located within the red knot AOI?

    Automatically answered
    Yes

31. If you have determined that the red knot is unlikely to occur within your project’s action area or that your project is unlikely to have any potential effects on the red knot, you may wish to make a “no effect” determination for the red knot. Additional guidance on how to make this decision can be found in the project review section of your local Ecological Services Field Office's website. CBFO: https://www.fws.gov/office/chesapeake-bay-ecological-services/project-review ; MEFO: https://www.fws.gov/office/maine-ecological-services ; NJFO: https://www.fws.gov/office/new-jersey-ecological-services/new-jersey-field-office-project-review-guide ; NEFO: https://www.fws.gov/office/new-england-ecological-services/endangered-species-project-review#Step5 ; WVFO: https://www.fws.gov/office/west-virginia-ecological-services/project-planning. If you are unsure, answer "No" and continue through the key.

    Would you like to make a no effect determination for the red knot?

    Yes

32. [Hidden Semantic] Is the project area located within the roseate tern AOI?

    Automatically answered
    Yes

33. If you have determined that the roseate tern is unlikely to occur within your project’s action area or that your project is unlikely to have any potential effects on the roseate tern, you may wish to make a “no effect” determination for the roseate tern. Additional guidance on how to make this decision can be found in the project review section of your local Ecological Services Field Office's website. CBFO: https://www.fws.gov/office/chesapeake-bay-ecological-services/project-review ; MEFO: https://www.fws.gov/office/maine-ecological-services ; NJFO: https://www.fws.gov/office/new-jersey-ecological-services/new-jersey-field-office-project-review-guide ; NEFO: https://www.fws.gov/office/new-england-ecological-services/endangered-species-project-review#Step5 ; WVFO: https://www.fws.gov/office/west-virginia-ecological-services/project-planning. If you are unsure, answer "No" and continue through the key.

    Would you like to make a no effect determination for the roseate tern?

    No

34. [Semantic] Does the project intersect the Virginia big-eared bat critical habitat?

    Automatically answered
    No

35. [Semantic] Does the project intersect the Indiana bat critical habitat?

    Automatically answered
    No

36. [Semantic] Does the project intersect the candy darter critical habitat?

    Automatically answered
    No

37. [Semantic] Does the project intersect the diamond darter critical habitat?

    Automatically answered
    No

38. [Semantic] Does the project intersect the Big Sandy crayfish critical habitat?

    Automatically answered
    No

39. [Hidden Semantic] Does the project intersect the Guyandotte River crayfish critical habitat?

    Automatically answered
    No

40. Do you have any other documents that you want to include with this submission?

    Yes

    SUBMITTED DOCUMENTS

    - *UNE MSC APPENDIX B.pdf* *https://ipac.ecosphere.fws.gov/project/5OEXZ4IMIRGHTN6NWQ6DFNIBIY/projectDocuments/126368373*
    - *Photos of bank and shore at pier.pdf* *https://ipac.ecosphere.fws.gov/project/5OEXZ4IMIRGHTN6NWQ6DFNIBIY/projectDocuments/126368441*

PROJECT QUESTIONNAIRE

1. Approximately how many acres of trees would the proposed project remove?

   0.3

2. Approximately how many total acres of disturbance are within the disturbance/ construction limits of the proposed project?

   0.3

3. Briefly describe the habitat within the construction/disturbance limits of the project site.

   The access road area is forested upland with sparse ground cover and trres generally between 3 inches and 10 inches in diameter. The upland comes to a rock face with a drop of approximately 6 to 8 feet high to a cobble beach below that is within the intertidal zone. The cobbles are covered with rock weed growing between the cobbles. Photos of the upland and cobble intertidal zone have been uploaded.

IPAC USER CONTACT INFORMATION

Agency: Department of Commerce
Name: Ian Broadwater
Address: 18 Grand Street
City: South Portland
State: ME
Zip: 04106
Email ian@broadwaterenvironmental.com
Phone: 2076538737

LEAD AGENCY CONTACT INFORMATION

Lead Agency: Department of Commerce

Tom Saucier

From: Ian <ian@broadwaterenvironmental.com>
Sent: Friday, May 19, 2023 9:58 AM
To: Tom Saucier
Subject: FW: [EXTERNAL] UNE Pier Project

From: Mahaney, Wende <wende_mahaney@fws.gov>
Sent: Friday, May 19, 2023 8:34 AM
To: Ian <ian@broadwaterenvironmental.com>
Cc: Glon, Mael G <mael_glon@fws.gov>
Subject: Re: [EXTERNAL] UNE Pier Project

Hi Ian,

So I looked at the letter you generated from using the NLEB determination key. You reached a "not likely to adversely affect" determination, which would then have to be "submitted" to USFWS by the Corps project manager through IPaC once you submit the permit application and supporting materials.

But, you really could have made a "no effect" determination at Question 2 in the dkey since NLEB really are not expected to occur at the project site. I suspect the Corps PM may change the answers in the dkey and go that route. That's their decision to make. You can leave things as is in IPaC and let the Corps make the final decision on no effect or not likely to adversely affect. Either way, section 7 consultation for the NLEB can be completed quickly by the Corps through use of IPaC.

Thanks for your coordination.

Wende

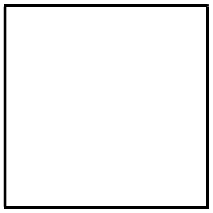

Wende S. Mahaney, C.W.B. (she/her/hers)
U.S. Fish and Wildlife Service
Maine Field Office
P.O. Box A (mailing address)
306 Hatchery Road (physical address)
East Orland, Maine 04431

Telephone: (207) 902-1569 (direct line)
Fax: (207) 902-1588
Cellular Phone: 207-944-2991

From: Ian <ian@broadwaterenvironmental.com>
Sent: Thursday, May 18, 2023 11:20 AM
To: Mahaney, Wende <wende_mahaney@fws.gov>
Subject: [EXTERNAL] UNE Pier Project

This email has been received from outside of DOI - Use caution before clicking on links, opening attachments, or responding.

Hi Wende,

I have revised the iPAC for this project. I added "revised" onto the title and will archive the old version. I needed to revise some answers that I couldn't edit in the old version. I also added additional information that I gathered from the engineer and by visiting the site in person. In the revised iPAC we have the Rosate tern and NLEB showing up as "may effect".

When I visited the site, I took pictures from the approximate center of the pier looking down at the shore. They are attached. The shore is all intertidal where the pier is going . The intertidal zone meets a vertical rock face of 6 to 8 feet high. At this location, the intertidal zone has cobbles covering 80% of the area and rock weed covering much of the cobbles (and non-cobble areas). Due to this condition, we felt that the Piping plover and the Red knot would not frequent nor nest in this type of setting. We did feel like there was a potential for the Rosate tern to potentially nest in the rock face. The rock face does face north and does not receive much in the way of sun. The upland at the top of the rock face is forested with a sparse herbaceous cover.

We were wondering if you can take a look at the revised iPAC and give us advice on how to proceed. I have added you to the project. Evidently, the permit application is going in next week.

Thanks in advance,

Ian

Ian Broadwater MECSS, MELSE, NHCWS
Broadwater Environmental, LLC
1-207-653-8737
www.broadwaterenvironmental.com



Photo 1-Upalnd at center of proposed pier

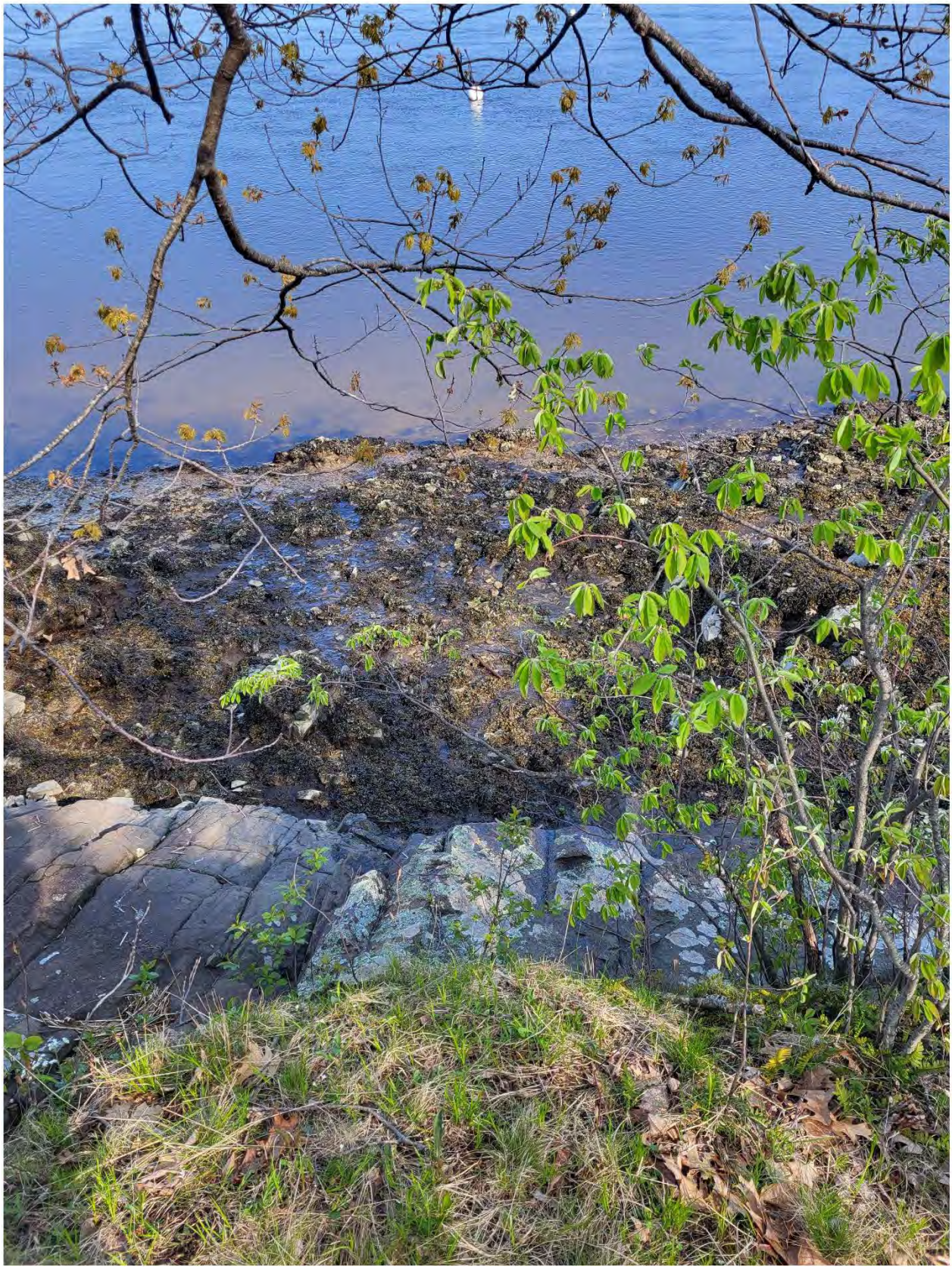

Photo 2-Rocky shore at center of proposed pier



Photo3-Looking east at point from center of pier



Photo 4-Looking west from center of proposed pier

ATTACHMENT 15 – ABUTTER NOTIFICATIONS

7022 1670 0001 0356 1867

CERTIFIED MAIL® RECEIPT
Domestic Mail Only

For delivery information, visit our website at *www.usps.com®*.

Biddeford, ME 04005

OFFICIAL USE

Certified Mail Fee	$4.40
Extra Services & Fees (check box, add fee as appropriate)	
☐ Return Receipt (hardcopy)	$0.00
☐ Return Receipt (electronic)	$0.00
☐ Certified Mail Restricted Delivery	$0.00
☐ Adult Signature Required	$0.00
☐ Adult Signature Restricted Delivery	$
Postage	$0.68
Total Postage	$8.73

0086 4

$3.65

TOPSHAM, MAINE 04086 JUN 14 2024 USPS 06/14/2024

Postmark Here

Sent To
Street and
City, State

John and Elizabeth Mansfield
51 Hlls Beach Road
Biddeford, ME 04005

PS Form 3800, April 2015 PSN 7530-02-000-9047 See Reverse for Instructions

7022 1670 0001 0356 1812

CERTIFIED MAIL® RECEIPT
Domestic Mail Only

For delivery information, visit our website at *www.usps.com®*.

Biddeford, ME 04005

OFFICIAL USE

Certified Mail Fee	$4.40
Extra Services & Fees (check box, add fee as appropriate)	
☐ Return Receipt (hardcopy)	$0.00
☐ Return Receipt (electronic)	$0.00
☐ Certified Mail Restricted Delivery	$0.00
☐ Adult Signature Required	$0.00
☐ Adult Signature Restricted Delivery	$
Postage	$0.68
Total Postage	$8.73

0086 4

$3.65

TOPSHAM, MAINE 04086 JUN 14 2024 USPS 06/14/2024

Postmark Here

Sent To
Street and
City, State,

Wermenchuk Realty Trust
Bernice G. Wermenchuk, Trustee
2 Old Pool Road
Biddeford, ME 04005

PS Form 3800, April 2015 PSN 7530-02-000-9047 See Reverse for Instruction

7022 1670 0001 0356 1829

U.S. Postal Service™
CERTIFIED MAIL® RECEIPT
Domestic Mail Only

For delivery information, visit our website at *www.usps.com®*.

Saco, ME 04072

OFFICIAL USE

Certified Mail Fee	$4.40
Extra Services & Fees (check box, add fee as appropriate)	
☐ Return Receipt (hardcopy)	$0.00
☐ Return Receipt (electronic)	$0.00
☐ Certified Mail Restricted Delivery	$0.00
☐ Adult Signature Required	$0.00
☐ Adult Signature Restricted Delivery	$
Postage	$0.68
Total Postage	$8.73

0086 4

$3.65

TOPSHAM, MAINE 04086 JUN 14 2024 USPS 06/14/2024

Postmark Here

Sent To
Street and
City, State

5 Red Oak Lane, LLC
62 Pleasant Street
Saco, ME 04072

PS Form 3800, April 2015 PSN 7530-02-000-9047 See Reverse for Instructions

7022 1670 0001 0356 1843

U.S. Postal Service™
CERTIFIED MAIL® RECEIPT
Domestic Mail Only

For delivery information, visit our website at *www.usps.com®*.

Biddeford, ME 04005

OFFICIAL USE

Certified Mail Fee	$4.40
Extra Services & Fees (check box, add fee as appropriate)	
☐ Return Receipt (hardcopy)	$0.00
☐ Return Receipt (electronic)	$0.00
☐ Certified Mail Restricted Delivery	$0.00
☐ Adult Signature Required	$0.00
☐ Adult Signature Restricted Delivery	$
Postage	$0.68
Total Postage	$8.73

0086 4

$3.65

TOPSHAM, MAINE 04086 JUN 14 2024 USPS 06/14/2024

Postmark Here

Sent To
Street and
City, State

John Paul and Agnes Boucher
26 Reserved Lane
Biddeford, ME 04005

PS Form 3800, April 2015 PSN 7530-02-000-9047 See Reverse for Instruction

7022 1670 0001 0356 1850

U.S. Postal Service™
CERTIFIED MAIL® RECEIPT
Domestic Mail Only

For delivery information, visit our website at *www.usps.com®*.

Biddeford, ME 04005

OFFICIAL USE

Certified Mail Fee	$4.40
Extra Services & Fees (check box, add fee as appropriate)	
☐ Return Receipt (hardcopy)	$0.00
☐ Return Receipt (electronic)	$0.00
☐ Certified Mail Restricted Delivery	$0.00
☐ Adult Signature Required	$0.00
☐ Adult Signature Restricted Delivery	$
Postage	$0.68
Total Postage	$8.73

0086 4

$3.65

TOPSHAM, MAINE 04086 JUN 14 2024 USPS 06/14/2024

Postmark Here

Sent To
Street
City, S

Julie J. Vogel
11 Seabreeze Ave
Biddeford, ME 04005

PS Form 3800, April 2015 PSN 7530-02-000-9047 See Reverse for Instructions

7022 1670 0001 0356 1836

U.S. Postal Service™
CERTIFIED MAIL® RECEIPT
Domestic Mail Only

For delivery information, visit our website at *www.usps.com®*.

Biddeford, ME 04005

OFFICIAL USE

Certified Mail Fee	$4.40
Extra Services & Fees (check box, add fee as appropriate)	
☐ Return Receipt (hardcopy)	$0.00
☐ Return Receipt (electronic)	$0.00
☐ Certified Mail Restricted Delivery	$0.00
☐ Adult Signature Required	$0.00
☐ Adult Signature Restricted Delivery	$
Postage	$0.68
Total Postage	$8.73

0086 4

$3.65

TOPSHAM, MAINE 04086 JUN 14 2024 USPS 06/14/2024

Postmark Here

Sent To
Street
City, S

Kelly E. Grasso
9 Red Oak Lane
Biddeford, ME 04005

PS Form 3800, April 2015 PSN 7530-02-000-9047 See Reverse for Instruction

UNIVERSITY OF NEW ENGLAND
MARINE SCIENCE CENTER PIER

BIDDEFORD, MAINE

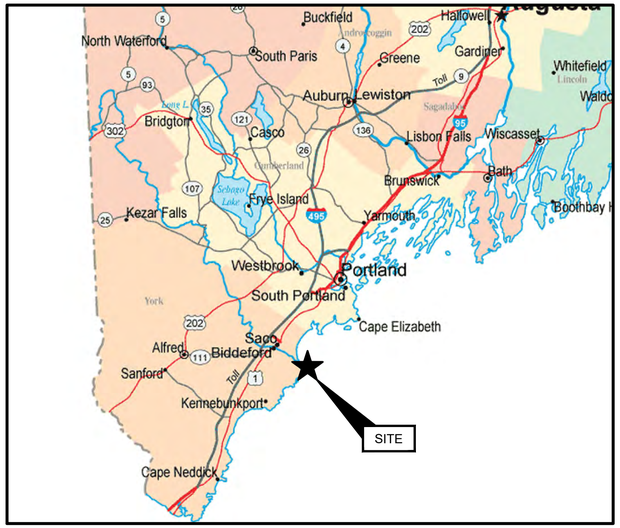

SOURCE:
MAINE ROAD MAP, GOOGLE IMAGES, ACCESSED SEPTEMBER 2023.

STATE MAP
(NOT TO SCALE)

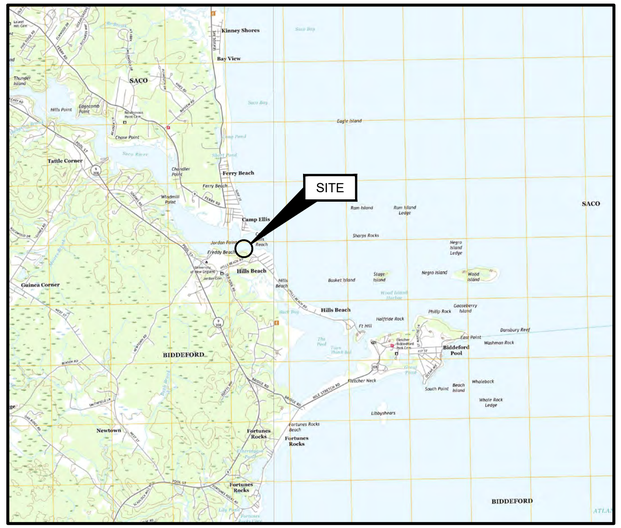

SOURCE:
USGS TOPOGRAPHICAL MAP OF BIDDEFORD, MAINE 2022

SITE LOCATION MAP
(NOT TO SCALE)

SHEET INDEX

SHEET NO.	DRAWING NO.	TITLE
1	G-001	COVER SHEET
2	G-002	GENERAL NOTES
3	G-003	VICINITY PLAN
4	B-001	BORING LOCATION PLAN
5	B-002	BORING LOGS (1 OF 3)
6	B-003	BORING LOGS (2 OF 3)
7	B-004	BORING LOGS (3 OF 3)
8	B-005	INTERPRETIVE SUBSURFACE PROFILE
9	C-001	EXISTING CONDITIONS PLAN
10	C-002	DEMOLITION AND CONSTRUCTION STAGING
11	C-003	SITE PLAN
12	C-004	GRADING AND DRAINAGE PLAN
13	C-005	EROSION CONTROL PLAN
14	C-006	ACCESS ROAD PLAN AND PROFILE STA 1+00 TO MATCHLINE STA 4+00
15	C-007	ACCESS ROAD PLAN AND PROFILE MATCHLINE STA 4+00 TO STA 6+60
16	C-008	ACCESS ROAD TYPICAL SECTION
17	C-009	ACCESS ROAD SECTIONS 2+00 TO 3+75
18	C-010	ACCESS ROAD SECTIONS 4+00 TO 5+75
19	C-011	SITE DETAILS I
20	C-012	EROSION CONTROL NOTES
21	C-013	EROSION CONTROL DETAILS I
22	C-014	EROSION CONTROL DETAILS II
23	S-001	PIER LAYOUT PLAN
24	S-002	PIER PLANS AND ELEVATIONS
25	S-003	TYPICAL PIER SECTIONS (1 OF 2)
26	S-004	TYPICAL PIER SECTIONS (2 OF 2)
27	S-005	PILE PLAN
28	S-006	PRECAST PILE CAP PLAN (1 OF 2)
29	S-007	PRECAST PILE CAP PLAN (1 OF 2)
30	S-008	PRECAST DECK PLANK PLAN
31	S-009	MISCELLANEOUS DETAILS (1 OF 5)
32	S-010	MISCELLANEOUS DETAILS (2 OF 5)
33	S-011	MISCELLANEOUS DETAILS (3 OF 5)
34	S-012	MISCELLANEOUS DETAILS (4 OF 5)
35	S-013	MISCELLANEOUS DETAILS (5 OF 5)
36	S-014	ABUTMENT DETAILS
37	F-001	FLOAT PLAN AND DETAILS

PREPARED FOR:

UNIVERSITY OF NEW ENGLAND
11 HILLS BEACH ROAD
BIDDEFORD, MAINE
(207)283-0171

PREPARED BY:

GEI CONSULTANTS, INC.
5 MILK STREET
PORTLAND, ME 04101
(207)797-8901

811 DigSafe

THIS DOCUMENT, AND THE IDEAS AND DESIGNS INCORPORATED HEREIN, IS AN INSTRUMENT OF PROFESSIONAL SERVICE, IS THE PROPERTY OF GEI CONSULTANTS AND IS NOT TO BE USED, IN WHOLE OR IN PART, FOR ANY OTHER PROJECT WITHOUT THE WRITTEN AUTHORIZATION OF GEI CONSULTANTS.

GEI PROJECT NO. 2203703

PRELIMINARY - NOT FOR CONSTRUCTION - FOR PERMIT

NO.	DATE	ISSUE/REVISION	APP
4	9/14/2023	DEP PERMIT SET	DJB
3	6/28/2023	75% DESIGN SUBMISSION	DJB
2	2/15/2023	30% DESIGN SUBMISSION	DJB
1	12/9/2022	15% DESIGN SUBMISSION, REV	DJB
0	11/11/2022	15% DESIGN SUBMISSION	DJB

STATE OF MAINE
DANIEL J. BANNON
No. 13033
LICENSED PROFESSIONAL ENGINEER
April 22, 2024

DWG. NO.
G-001

SHEET NO.
1 OF 37

COORDINATION OF WORK:

1. THE CONTRACTOR SHALL SCHEDULE ALL ACTIVITIES SO AS TO LIMIT IMPACT TO MARINE AND LANDSIDE USES.
2. WORK SHALL BE COORDINATED WITH THE OWNER AND THEIR REPRESENTATIVES:

UNE:A:A:A:	ANDREW PHILIPPE	207-602-2365 (OFFICE)	207-400-6166 (CELL)
GEI:A:A:B:	DANIEL BANNON	207-347-2372 (OFFICE)	207-671-2583 (CELL)
SDA:A:A:C:	TOM SAUCIER	207-449-4275	

3. WORK IS SUBJECT TO THE FOLLOWING TIME OF YEAR AND TIMING OF ACTIVITY RESTRICTIONS:
   - TO BE DEFINED UPON PERMIT APPROVAL.
4. CONTRACTOR ACCESS TO THE SITE BY WATER SHALL AT NO TIME IMPACT USE OF THE ADJACENT FEDERAL NAVIGATION CHANNEL.
5. THE OWNER WILL PERMIT THE CONTRACTOR TO HAVE A LAYDOWN AREA ON THE UPLAND PROPERTY FOR USE DURING CONSTRUCTION. AN APPROXIMATE LAYDOWN AREA IS SHOWN ON SHEET C-005. THE FINAL LOCATION AND DIMENSIONS OF THE LAYDOWN AREA SHALL BE APPROVED BY THE OWNER.

SITE ENVIRONMENTAL CONTROLS:

1. ALL WORK SHALL BE PERFORMED IN COMPLIANCE WITH CITY, STATE, AND FEDERAL PERMITS. COPIES OF PERMIT APPROVALS ARE PROVIDED IN THE PROJECT MANUAL.

OSHA REQUIREMENTS:

1. PURSUANT TO 26 M.R.S.A. §565, THE CONTRACTOR SHALL ADHERE TO THE OCCUPATIONAL SAFETY AND HEALTH STANDARDS AS PROMULGATED BY THE FEDERAL OCCUPATIONAL SAFETY AND HEALTH ADMINISTRATION (OSHA) AT 29-CFR PART 1926 AS MOST RECENTLY AMENDED.

EROSION CONTROL:

1. EROSION AND SEDIMENTATION CONTROL MEASURES ARE PROPOSED TO CONTROL ACCELERATED EROSION AND SEDIMENTATION AND REDUCE ADVERSE IMPACTS FROM RUNOFF AND EROSION AT THE WORK SITE.
2. APPLICATION OF TEMPORARY AND PERMANENT EROSION CONTROL MEASURES SHALL BE IN ACCORDANCE WITH THE LATEST EDITION OF THE MAINE EROSION AND SEDIMENT CONTROL BMP'S PUBLISHED BY MAINE DEP AND AVAILABLE AT: HTTPS://WWW.MAINE.GOV/DEP/LAND/EROSION/ESCBMPS/
3. THE WORK SHALL BE PERFORMED BY A CONTRACTOR THAT IS CERTIFIED BY MAINE DEP IN EROSION AND SEDIMENT CONTROL MEASURES. A CERTIFIED INDIVIDUAL SHALL BE ONSITE DURING ALL CONSTRUCTION ACTIVITY.
4. EROSION AND SEDIMENTATION DUE TO RUNOFF, TIDAL EXPOSURE, AND WAVE ACTION SHALL BE CONTROLLED BY STAGING CONSTRUCTION ACTIVITY TO MINIMIZE AREA AND TIME OF DISTURBANCE, APPLICATION OF SILT FENCE, BOOMS, BARRIERS, AND OTHER EROSION CONTROL MEASURES, AND PRESERVING NATURAL VEGETATION WHENEVER POSSIBLE.
5. THE CONTRACTOR'S SEQUENCE OF OPERATIONS AND SCHEDULE FOR WORK ACTIVITIES SHALL ACT TO MINIMIZE EXPOSURE TO EROSION.
6. THE CONTRACTOR SHALL INSTALL AND MAINTAIN A SILTATION BOOM AROUND THE PERIMETER OF THE WORK AREA FOR THE NEW PIER FOR THE DURATION OF WORK.
7. THE CONTRACTOR SHALL TAKE CARE TO LIMIT THE AREA OF SOIL DISTURBANCE TO THE MINIMUM NECESSARY TO COMPLETE THE WORK.
8. EROSION CONTROL MEASURES, SEEDING, AND VEGETATION SHALL BE INSPECTED WEEKLY AND AFTER RAINSTORMS, RUNOFF EVENTS, AND STORM EVENTS UNTIL FINAL ACCEPTANCE. REPAIRS SHALL BE MADE WHEN NO LONGER SERVICEABLE DUE TO DAMAGE OR ACCUMULATION OF SEDIMENT.
9. AT THE COMPLETION OF CONSTRUCTION, ALL DISTURBED AREAS SHALL BE RESTORED TO THEIR ORIGINAL CONDITION AND CONTOUR, UNLESS OTHERWISE INDICATED ON THE PLANS.

SITE PREPARATION:

1. CONTRACTOR SHALL INSTALL ALL SIGNAGE PRIOR TO INITIATION OF CONSTRUCTION ACTIVITIES. INCLUDE OWNER PROJECT SIGNAGE AND FEDERAL AND STATE MANDATED WORK PLACE SIGNAGE.
2. CONTRACTOR SHALL HAVE IN-PLACE TRASH AND SANITARY FACILITIES FOR THE WORK PLACE.
3. DISCOVERY OF INCONSISTENT SITE INFORMATION OR CONDITIONS ARE TO BE IMMEDIATELY CONVEYED TO THE OWNER AND ENGINEER PRIOR TO COMMENCING OR CONTINUING CONSTRUCTION.
4. THE CONTRACTOR SHALL NOTIFY DIG SAFE PRIOR TO COMMENCING ANY WORK.
5. LOCATIONS OF EXISTING UTILITIES SHOWN ARE APPROXIMATE. THE CONTRACTOR SHALL VERIFY LOCATIONS OF UTILITIES AS MAY BE REQUIRED. THE CONTRACTOR SHALL BE FULLY RESPONSIBLE FOR ANY AND ALL DAMAGES OCCURRING AS A RESULT OF THE CONTRACTOR'S FAILURE TO LOCATE AND PROTECT UNDERGROUND UTILITIES. ALL REPAIRS SHALL BE MADE AT THE CONTRACTOR'S EXPENSE.
6. CONTRACTOR SHALL MAINTAIN AND PROTECT ALL EXISTING UTILITIES AND DRAINAGE AT ALL TIMES. THE CONTRACTOR SHALL REPAIR ANY DAMAGE AND RESTORE TO THE PRE-EXISTING CONDITION AT NO COST TO THE OWNER.
7. CONTRACTOR SHALL PROTECT ALL EXISTING STRUCTURES AND SHALL PERFORM THE WORK IN A MANNER THAT AVOIDS DAMAGE TO EXISTING STRUCTURES. STRUCTURES INCLUDE, BUT ARE NOT LIMITED TO, BUILDINGS, PIERS, BULKHEADS, FLOATS, PIER UTILITIES AND FIXTURES, AND RIPRAP SLOPES. CONTRACTOR SHALL REPAIR ANY DAMAGE AT NO ADDITIONAL COST TO THE CITY.
8. CONTRACTOR SHALL SUPPLY ALL NECESSARY TEMPORARY UTILITIES FOR CONSTRUCTION INCLUDING, BUT NOT LIMITED TO; WATER, POWER, LIGHTING, DATA, AND TELEPHONE.
9. CONTRACTOR SHALL READ AND UNDERSTAND ALL REGULATORY CONDITIONS ASSOCIATED WITH THE PROJECT AND SHALL COMPLY WITH ALL ENVIRONMENTAL REQUIREMENTS AND PERMIT CONDITIONS.
10. CONTRACTOR SHALL PROVIDE A CONFINED CONCRETE TRUCK WASHDOWN AREA AT A LOCATION TO BE APPROVED BY THE ENGINEER. WASHDOWN AREA SHALL INCLUDE PROTECTION TO PAVEMENT, A PERIMETER WALL AND A FILTER FABRIC LINER. NO RUNOFF CONTAINING CEMENT OR OTHER SUSPENDED SOLIDS WILL BE PERMITTED. ALL MATERIALS SHALL BE COMPLETELY REMOVED UPON COMPLETION OF CONSTRUCTION AND DISPOSED OF AT AN APPROVED DISPOSAL LOCATION.

CODES:

1. MAINE DOT STANDARD SPECIFICATIONS, MARCH 2020 ED. WITH SUPPLEMENTAL SPECIFICATIONS THROUGH JUNE 16,2023.
2. MAINE UNIFORM BUILDING AND ENERGY CODE (MUBEC).
3. AMERICAN CONCRETE INSTITUTE (ACI) 318-14: BUILDING CODE REQUIREMENTS FOR STRUCTURAL CONCRETE, 2014 ED.
4. CONCRETE REINFORCING STEEL INSTITUTE (CRSI):
5. AMERICAN INSTITUTE FOR STEEL CONSTRUCTION (AISC) STEEL CONSTRUCTION MANUAL, 15TH ED.
6. ALUMINUM ASSOCIATION, ALUMINUM DESIGN MANUAL, 2015 ED.
7. AMERICAN WOOD COUNCIL, NATIONAL DESIGN SPECIFICATIONS (NDS) FOR WOOD CONSTRUCTION, 2015 ED.

SITE CONTROL AND BASELINES:

1. PROJECT BASE PLAN HAS BEEN DEVELOPED FROM A COMPILATION OF MULTIPLE SURVEYS AS DESCRIBED UNDER "SURVEY AND PROPERTY NOTES".
2. ELEVATIONS ARE PROVIDED IN NAVD88 VERTICAL DATUM UNLESS OTHERWISE NOTED.
3. THE CONTRACTOR SHALL INSTALL SURVEY CONTROL AS NECESSARY TO PERFORM THE WORK. PERMANENT SURVEY CONTROL (AT LEAST 2 POINTS) SHALL BE ESTABLISHED FOR THE PROJECT AND PROTECTED FROM DAMAGE DURING CONSTRUCTION AND PROVIDED ON AS-BUILT DRAWINGS.
4. THE CONTRACTOR SHALL ESTABLISH AND MAINTAIN PROJECT BASELINES AND CONTROL AS REQUIRED TO ENSURE ACCURATE LOCATION OF ALL ELEMENTS OF THE PROJECT.

SURVEY AND PROPERTY NOTES:

1. LOCUS PARCEL IS DEPICTED ON CITY OF BIDDEFORD, TAX MAP 52, LOT 4 AND IS LOCATED IN THE INSTITUTIONAL (IN) ZONE. A PORTION OF THE SITE IS LOCATED IN THE LIMITED RESIDENTIAL (LR) SHORELAND OVERLAY DISTRICT.
2. THE RECORD OWNER IS THE UNIVERSITY OF NEW ENGLAND, BY DEED DATED APRIL 18, 1962, RECORDED IN THE YORK COUNTY REGISTRY OF DEEDS IN BOOK 1484, PAGE 0145.
3. UPLAND TOPOGRAPHY AND BASE SURVEY INFORMATION DEPICTED HEREON ARE BASED ON THE FOLLOWING SURVEYS:
   - "TOPOGRAPHIC SURVEY, MARINE SCIENCE CENTER, UNIVERSITY OF NEW ENGLAND" BY OWEN HASKELL, INC. DATED DEC. 13, 2022.
   - "TOPOGRAPHIC SURVEY AT MARINE SCIENCE CENTER" BY STATEWIDE SURVEYS, INC., DATED MAY 4, 2015.
4. HYDROGRAPHIC DATA DEPICTED HEREON IS BASED ON 2022 SURVEY BY OWEN HASKELL SURVEY.
5. FEDERAL CHANNEL LIMITS ARE DEPICTED BASED ON THE PLAN. "SACO RIVER, SACE AND BIDDEFORD, MAINE, CONDITION SURVEY" PUBLISHED BY THE U.S. ARMY CORPS OF ENGINEERS, DATED JULY 3, 2021.
6. HORIZONTAL COORDINATES ARE BASED ON NAD83 MAINE STATE PLANE WEST ZONE-1801 AND ARE EXPRESSED IN FEET. ELEVATIONS ARE BASED ON NAVD88 VERTICAL DATUM AND CONTROL POINTS PROVIDED BY UNE.
7. UTILITY INFORMATION DEPICTED HEREON IS BASED ON FEBRUARY 2023 UTILITY LOCATION SURVEY PERFORMED BY BLOOD HOUND, LLC UNDERGROUND UTILITY LOCATORS AND MAY NOT NECESSARILY REPRESENT ALL EXISTING UTILITIES. CONTACT DIG SAFE (1-888-DIG-SAFE) AND VERIFY EXISTING UTILITIES PRIOR TO ANY CONSTRUCTION OR EXCAVATION.
8. PORTIONS OF THE PROPERTY ARE DEPICTED AS BEING IN A SPECIAL FLOOD HAZARD AREA BASED ON FEMA PRELIMINARY FIRM 23031C0459G DATED APRIL 14, 2017. THE SITE IS LOCATED IN A VE ZONE HAVING BASE FLOOD ELEVATION OF 14 FT NAVD88.
9. SUBSURFACE INFORMATION IS BASED ON EXPLORATIONS PERFORMED IN 2015 AND 2022 CONSISTING OF BORINGS, PROBES, AND TEST PITS. REFER TO SHEETS B-001 - B-005 FOR SUBSURFACE INFORMATION.

CONCRETE

1. CAST IN PLACE CONCRETE SHALL CONFORM TO THE FOLLOWING SPECIFICATIONS BASED ON THE MAINE DOT STANDARD SPECIFICATION:

LOCATION	MDOT CLASS	f'c
ALL CONCRETE	CLASS LP	5,000 PSI

2. ALL REINFORCEMENT SHALL BE NEW DEFORMED BARS, GRADE 60 CONFORMING TO ASTM A615, HOT DIP GALVANIZED ACCORDING TO ASTM A767/A767M OR ASTM A1094/A1094M.
3. REINFORCEMENT ACCESSORIES SHALL BE DIELECTRIC COATED STEEL OR APPROVED PLASTIC.
3. GROUT SHALL BE A HIGH STRENGTH, NON-SHRINK GROUT WITH SALT WATER RESISTANCE.
4. CONCRETE COVER SHALL BE A MINIMUM OF 3 INCHES UNLESS NOTED OTHERWISE.
5. ALL EXPOSED EDGES OF CONCRETE AT COLD JOINTS SHALL HAVE A ROUGHENED FINISH AND BE COATED WITH EPOXY BONDING AGENT PRIOR TO CASTING ADJACENT POUR.
6. PROVIDE 1 INCH CHAMFER ON ALL EXPOSED EDGES UNLESS NOTED OR DIRECTED OTHERWISE.
7. TOP SURFACE OF EXPOSED CONCRETE SHALL RECEIVE A BROOM FINISH.
8. COAT FINISHED SURFACES OF CONCRETE WITH A 100% SILANE PENETRATING CONCRETE SEALER SUITABLE FOR USE IN A MARINE ENVIRONMENT. SEALER SHALL BE LISTED ON THE MAINE DOT QUALIFIED PRODUCTS LIST.
9. REINFORCEMENT DEVELOPMENT AND LAP SPLICE LENGTHS SHALL BE IN ACCORDANCE WITH ACI 318.
10. CONCRETE MIX DESIGN SHALL INCLUDE THE USE OF CORROSION INHIBITING ADMIXTURE AT DOSAGE SUITABLE FOR USE IN AN AGGRESSIVE MARINE ENVIRONMENT. CORROSION INHIBITOR SHALL BE LISTED ON THE MAINE DOT QUALIFIED PRODUCTS LIST.

EPOXY ANCHORS

1. ANCHOR ROD, WASHERS, AND NUTS SHALL CONFORM TO ASTM F1554, GRADE 36, AND SHALL BE HOT DIP GALVANIZED.
2. THE MINIMUM EDGE DISTANCE AND MINIMUM SPACING FOR ALL ANCHORS SHALL BE 6 BOLT DIAMETERS.
3. ALL HOLES SHALL BE DRILLED TO THE RECOMMENDED DIAMETER PER MANUFACTURERS REQUIREMENTS USING CARBIDE DRILL BITS MEETING ANSI B212.5-1994.
4. HOLES SHALL BE BRUSHED WITH NYLON BRUSH AND BLOWN CLEAN USING OIL-FREE COMPRESSED AIR A MINIMUM OF TWO TIMES.
5. ALL HOLES SHALL BE FREE OF STANDING WATER BEFORE INSTALLING ANCHORS.
6. EPOXY SHALL HAVE MINIMUM BOND STRENGTH OF 1,600 PSI @ 14 DAYS.

EARTHWORK

1. EARTHWORK MATERIALS SHALL MEET THE FOLLOWING SPECIFICATIONS:

AGGREGATE BASE	TYPE A (MDOT 703.06A)
AGGREGATE SUBBASE	TYPE D (MDOT 703.06C)
WALL BACKFILL	CRUSHED STONE $\frac{3}{4}$" (MDOT 703.13)
DRAINAGE STONE	CRUSHED STONE 2 INCH (MDOT 703.31)
ORDINARY BORROW	SEE #2 BELOW.

2. ORDINARY BORROW SHALL BE EXISTING GRANULAR SOIL WITH MAXIMUM 4 INCH STONE SUBJECT TO APPROVAL BY THE ENGINEER. ALL DEBRIS OR OTHER DELETERIOUS MATERIALS SHALL BE REMOVED FROM ORDINARY BORROW PRIOR TO REUSE.

STEEL

1. STEEL ANGLE, STRAPS, AND MISCELLANEOUS FABRICATIONS SHALL BE ASTM A36 HOT DIP GALVANIZED AFTER FABRICATION, UNLESS OTHERWISE NOTED.
2. ALL FASTENERS SHALL BE HOT-DIP GALVANIZED OR STAINLESS STEEL.
3. ALL BOLTS SHALL CONFORM TO ASTM A307. MINIMUM SIZE SHALL BE $\frac{5}{8}$ INCH UNLESS OTHERWISE NOTED.

HEAVY TIMBER

1. UNLESS OTHERWISE SPECIFIED, ALL TIMBER FRAMING TO BE USED SHALL BE NO. 1 AND BETTER SOUTHERN PINE AS GRADED BY SPIB AND WITH DESIGN VALUES PER NDS 2015.
2. ALL TIMBER SHALL BE NEW AND SUPPLIED WITH NOMINAL DIMENSIONS UNLESS OTHERWISE NOTED.
3. ALL NEW SOUTHERN YELLOW PINE TIMBER MEMBERS TO WHICH THE PUBLIC MAY BE EXPOSED SHALL BE TREATED WITH ALKALINE COPPER QUATERNARY (ACQ) IN ACCORDANCE WITH AWPA & AWPB W/ MINIMUM RETENTION OF 0.60 LBS. PER CUBIC FOOT. ALL OTHER SOUTHERN YELLOW PINE MEMBERS SHALL BE CCA TREATED TO 2.5 PCF RETENTION.
4. ALL EXPOSED EDGES SHALL BE PLANED OR SANDED TO PROVIDE SMOOTH SURFACE FREE OF ROUGH EDGES OR DEFECTS.
5. ALL EXPOSED FASTENERS SHALL BE COUNTERSUNK.
6. DOCK WASHERS SHALL BE PROVIDED BENEATH NUT OR BOLT HEAD OF ALL TIMBER BOLTED CONNECTIONS. TIMBER BOLTS SHALL BE CONSIDERED AN ACCEPTABLE ALTERNATIVE TO HEX HEADED BOLTS WITH DOCK WASHERS.
7. STANDARD WASHERS SHALL BE PERMISSIBLE WHERE CONNECTED PARTS INCLUDE STEEL PLATES, ANGLES, BRACKETS, OR BACKER PLATES.

TIMBER PILES

1. TIMBER PILES SHALL BE TROPICAL GREENHEART AND SHALL CONFORM TO ASTM D25.
2. PROVIDE PROTECTION TO PILE TIP AND BUTT TO AVOID DAMAGE DURING DRIVING.
3. PILES SHALL BE ORDERED MINIMUM 5 FT LONGER THAN TABULATED LENGTHS TO ALLOW FOR INSTALLATION VARIABILITY AND CUTOFF.
4. ALL TIMBER PILES SHALL BE DRIVEN TO THE MINIMUM EMBEDMENT OR CAPACITY CRITERIA INDICATED IN THE PILE SCHEDULE. FENDER PILES MAY BE INSTALLED TO THE REQUIRED DEPTH USING A VIBRATORY HAMMER. IN THE EVENT THAT A VIBRATORY HAMMER IS UNABLE TO ACHIEVE THE MINIMUM REQUIRED EMBEDMENT, THE CONTRACTOR WILL BE RESPONSIBLE FOR COMPLETING FINAL SET USING AN IMPACT HAMMER.
5. GREENHEART PILES SHALL BE BANDED WITH $1\frac{1}{2}$ INCH STAINLESS STEEL UTILITY STRAPPING PRIOR TO CUTOFF. REFER TO DETAIL ON SHEET S-009.

ASPHALT

1. PAVING GRADES SHALL PITCH TO EXISTING STRUCTURES.
2. PAVEMENT SHALL CONSIST OF 4" OF HOT MIX ASPHALT PLACED IN TWO COURSES, SEE DETAIL.
3. CONTRACTOR TO SAW CUT PAVEMENT AT LIMIT OF REMOVAL.
4. CONTRACTOR TO PROVIDE SMOOTH TRANSITIONS BETWEEN NEW AND EXISTING ASPHALT.
5. CONTRACTOR TO SEAL JOINT BETWEEN NEW AND EXISTING ASPHALT WITH BITUMINOUS JOINT SEALANT.

GEOTEXTILE

1. GEOTEXTILE SEPARATION FABRIC SHALL BE MIRAFI FW700 OR EQUIVALENT.
2. OVERLAP ALL SEAMS MINIMUM 2 FT.
3. INSTALL PER MANUFACTURERS RECOMMENDATIONS.

STEEL PIPE PILES

1. STEEL PIPE PILES SHALL CONFORM TO ASTM A252, GRADE 3.
2. ALL PILES SHALL BE SEAMLESS.
3. AN OPEN CUTTING SHOE IS REQUIRED.
4. PIPE PILES SHALL BE COATED WITH FUSION BONDED EPOXY, COLOR BROWN. MINIMUM COATING THICKNESS SHALL BE 18-20 MIL. COATING SHALL EXTEND FROM TOP OF PILE DOWN TO MINIMUM 5-FEET BELOW GRADE.
5. DAMAGE TO ANY STEEL COATING SHALL BE TOUCHED UP BY THE CONTRACTOR USING APPROVED MATERIALS AND METHODS.
6. ALL PILES SHALL BE FILLED TO THE TOP WITH CONCRETE AFTER INSTALLATION. ROCK-SOCKETED PILES SHALL BE CLEANED OUT AND FILLED FOR THEIR ENTIRE LENGTH PRIOR TO CONCRETE FILLING. DRIVEN PILES SHALL BE CLEANED OUT TO MINIMUM 10-FEET BELOW ADJACENT MUDLINE.
7. REFER TO PILE SCHEDULE ON SHEET S-005 FOR ESTIMATED PILE LENGTHS, COATING LENGTHS, SIZES, AND SOCKETING REQUIREMENTS.

TIMBER FLOATS

1. FLOAT MANUFACTURER SHALL SUBMIT SHOP DRAWINGS AND CALCULATIONS SIGNED AND SEALED BY A MAINE LICENSED PROFESSIONAL ENGINEER. MANUFACTURER SHALL BE RESPONSIBLE FOR FINAL DETERMINATION OF FLOAT FRAMING AND DRUM LAYOUT TO MEET BOUYANCY, LOADING, AND ENVIRONMENTAL EXPOSURE REQUIREMENTS IN ACCORDANCE WITH THE SPECIFICATIONS.
2. UNLESS OTHERWISE SPECIFIED, ALL TIMBER TO BE USED SHALL BE NO. 1 AND BETTER SOUTHERN PINE AS GRADED BY SPIB AND WITH DESIGN VALUES PER NFPA NATIONAL DESIGN SPECIFICATION OR THE EQUIVALENT FOR DOUGLAS FIR AS GRADED BY WCLIB AND WWPA.
3. ALL TIMBER SHALL BE NEW AND SUPPLIED WITH NOMINAL DIMENSIONS.
4. ALL TIMBER MEMBERS TO WHICH THE PUBLIC MAY BE EXPOSED SHALL BE TREATED WITH ALKALINE COPPER QUATERNARY (ACQ) IN ACCORDANCE WITH AWPA & AWPB W/ MINIMUM RETENTION OF 0.40 LBS. PER CUBIC FOOT. ALL OTHER SOUTHERN YELLOW PINE MEMBERS SHALL BE CCA TREATED TO 2.5 PCF RETENTION.
5. DECKING SHALL BE NO. 1 SOUTHERN PINE, MINIMUM SIZE 2X6.
6. MISC. HARDWARE: GALVANIZED STEEL PLATES AND ALL BOLTS AND RELATED HARDWARE SHALL BE FASHIONED FROM STEEL AND GALVANIZED AFTER FABRICATION AND IN ACCORDANCE WITH REQUIREMENTS OF ASTM A123, AND/OR A153. BOLTS AND NUTS SHALL CONFORM TO ASTM A307.
7. CONNECTION HARDWARE SHALL BE FABRICATED FROM ASTM-A36 GRADE STEEL WITH MINIMUM THICKNESS ¼".
8. PROVIDE GUIDE/WEARING BRACKETS AT GANGWAY LANDING ON FLOAT 'C' PER DETAIL A ON SHEET S-012. BRACKETS SHALL BE LOCATED IN FIELD TO BE CENTERED ON GANGWAY RANGE OF TRAVEL AT MID-TIDE ELEVATION.
9. TRANSITIONS BETWEEN FLOATING DOCKS SHALL INCLUDE ADA COMPLIANT TRANSITION PLATES ACROSS GAPS AT HINGE LOCATIONS.
10. FLOATING DOCKS SHALL MEET THE FOLLOWING LOADING AND FREEBOARD CRITERIA:

DEAD LOAD	20 INCH FREEBOARD
20 PSF UNIFORM LIVE LOAD	MINIMUM 8 INCH FREEBOARD
40 PSF UNIFORM LIVE LOAD	MINIMUM ZERO FREEBOARD

DEAD LOADS SHALL INCLUDE ALL COMPONENTS AND ATTACHMENTS INCLUDING WEIGHT OF ALUMINUM GANGWAY BEARING ON FLOAT 'C'.

ALUMINUM GANGWAY

1. GANGWAY MANUFACTURER SHALL SUBMIT SHOP DRAWINGS AND CALCULATIONS SIGNED AND SEALED BY A MAINE LICENSED PROFESSIONAL ENGINEER. MANUFACTURER SHALL BE RESPONSIBLE FOR FINAL DETERMINATION OF GANGWAY FRAMING AND CONFIGURATION TO MEET STRUCTURAL, PERFORMANCE, AND ACCESSIBILITY REQUIREMENTS IN ACCORDANCE WITH THE SPECIFICATIONS.
2. GANGWAY SHALL MEET THE FOLLOWING LOADING AND DEFLECTION CRITERIA:
   - DEAD LOAD SHALL CONSIST OF WEIGHT OF THE ENTIRE GANGWAY STRUCTURE PLUS ANY UTILITIES AND ATTACHMENTS.
   - ALLOWABLE STRESSES IN DECK SURFACE, GANGWAY FRAMING, AND MOUNTING COMPONENTS SHALL NOT BE EXCEEDED AT A UNIFORM LIVE LOAD OF 100 PSF.
   - 50 PSF UNIFORM LIVE LOAD MAX. DEFLECTION L/360
   - 100 PSF UNIFORM LIVE LOAD MAX. DEFLECTION NOT TO EXCEED GANGWAY CAMBER
   - ALL HANDRAIL AND POSTS SHALL BE DESIGNED TO WITHSTAND A 200 LB LOAD APPLIED IN ANY DIRECTION OR A 50 LB/FT LOAD APPLIED ALONG THE HANDRAIL LENGTH.
3. GANGWAY HINGES SHALL BE CAPABLE OF TRAVELING FREELY AND WITHOUT BINDING THROUGH THE ENTIRE RANGE OF WATER LEVELS FROM MLLW TO BASE FLOOD ELEVATION PLUS TWO-FEET OF ADDITIONAL ELEVATION IN EITHER DIRECTION.

FOR PERMIT

Attention:
0 1"
If this scale bar does not measure 1" then drawing is not original scale.

STATE OF MAINE
DANIEL J. BANNON
No. 13033
PROFESSIONAL ENGINEER
LICENSED
April 22, 2024

Designed:	DJB
Drawn:	JAM
Checked:	BJB
Approved:	BMM
P.E. No:	13033
GEI Project	2203703

GEI Consultants
GEI CONSULTANTS, INC.
5 MILK STREET
PORTLAND, ME 04101
(207)797-8901

UNE
UNIVERSITY OF NEW ENGLAND
11 HILLS BEACH RD.
BIDDEFORD, MAINE

UNIVERSITY OF NEW ENGLAND
MARINE SCIENCE CENTER PIER
11 HILLS BEACH ROAD
BIDDEFORD, YORK COUNTY, MAINE

NO	DATE	ISSUE/REVISION	APP
4	9/14/2023	DEP PERMIT SET	DJB
3	6/28/2023	75% DESIGN SUBMISSION	DJB
2	2/15/2023	30% DESIGN SUBMISSION	DJB
1	12/9/2022	15% DESIGN SUBMISSIONREV	DJB
0	11/11/2022	15% DESIGN SUBMISSION	DJB

SHEET NAME
GENERAL NOTES

SHEET NO.
G-002

MORICI, ANTHONY \\geiconsultants.com\data\Data_Storage\Working\UNIVERSITY OF NEW ENGLAND\2203703 UNE Marine Science Center Pier\00_CAD\Design\Sheets\2203703-G-002.dwg - 9/14/2023



0 200 400
SCALE, FEET

FOR PERMIT

Attention:
0 1"
If this scale bar does not measure 1" then drawing is not original scale.

STATE OF MAINE
DANIEL J. BANNON
No. 13033
LICENSED PROFESSIONAL ENGINEER
April 22, 2024

Designed:	DJB
Drawn:	JAM
Checked:	BJB
Approved:	BMM
P.E. No:	13033
GEI Project	2203703

GEI Consultants
GEI CONSULTANTS, INC.
5 MILK STREET
PORTLAND, ME 04101
(207)797-8901

UNE
UNIVERSITY OF NEW ENGLAND
11 HILLS BEACH RD.
BIDDEFORD, MAINE

UNIVERSITY OF NEW ENGLAND MARINE SCIENCE CENTER PIER

11 HILLS BEACH ROAD
BIDDEFORD, YORK COUNTY, MAINE

NO	DATE	ISSUE/REVISION	APP
5	4/22/2024	REV. SHT. G-003	DJB
4	9/14/2023	DEP PERMIT SET	DJB
3	6/28/2023	75% DESIGN SUBMISSION	DJB
2	2/15/2023	30% DESIGN SUBMISSION	DJB
1	12/9/2022	15% DESIGN SUBMISSIONREV	DJB
0	11/11/2022	15% DESIGN SUBMISSION	DJB

SHEET NAME: **VICINITY PLAN**

SHEET NO.: **G-003**

DOYLE.JESSY \\geiconsultants.com\data\Data_Storage\Working\UNIVERSITY OF NEW ENGLAND\2203703 UNE Marine Science Center Pier\00_CAD\Design\Sheets\2203703-G-003.dwg - 4/22/2024

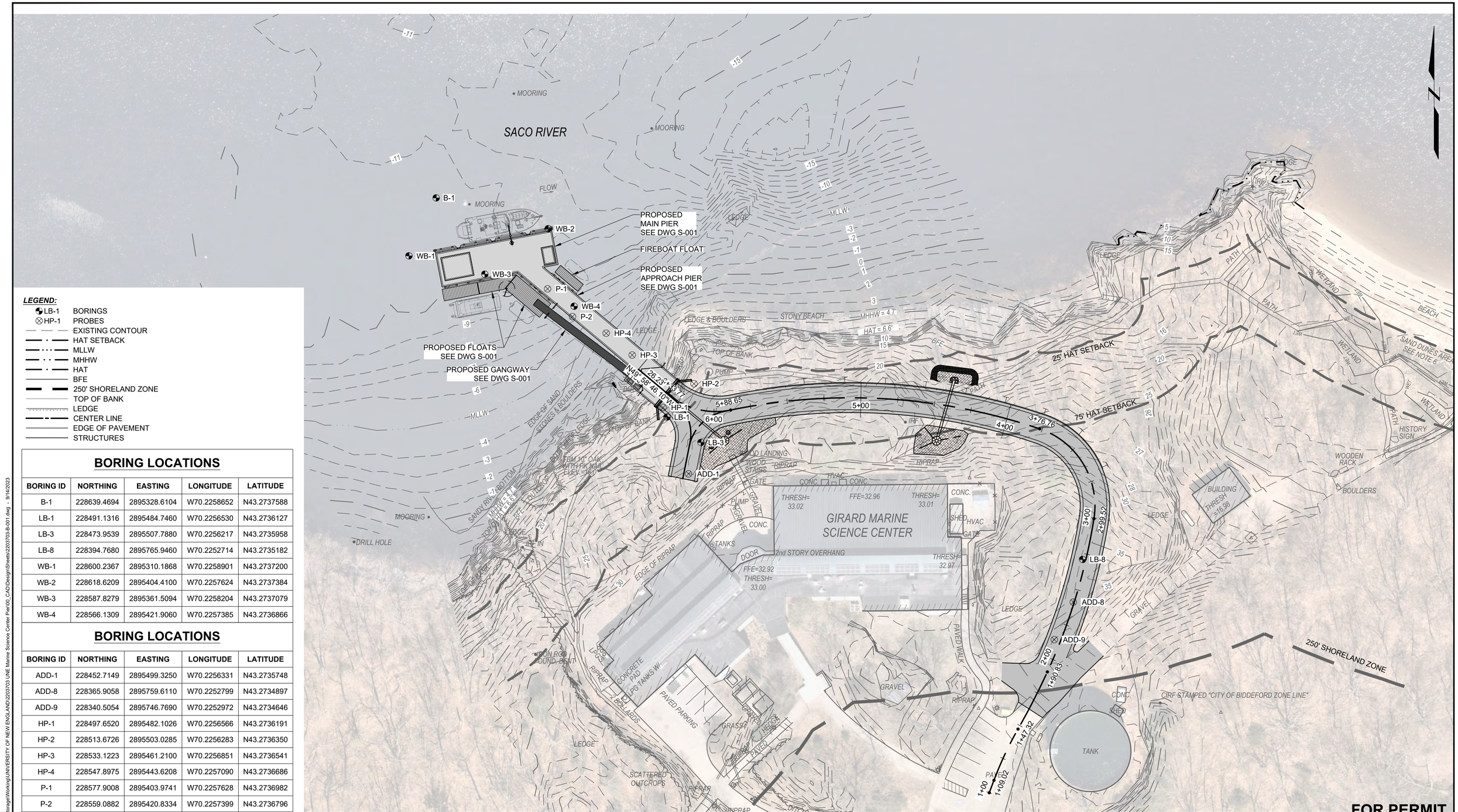

LEGEND:

- LB-1 BORINGS
- HP-1 PROBES
- EXISTING CONTOUR
- HAT SETBACK
- MLLW
- MHHW
- HAT
- BFE
- 250' SHORELAND ZONE
- TOP OF BANK
- LEDGE
- CENTER LINE
- EDGE OF PAVEMENT
- STRUCTURES

BORING LOCATIONS

BORING ID	NORTHING	EASTING	LONGITUDE	LATITUDE
B-1	228639.4694	2895328.6104	W70.2258652	N43.2737588
LB-1	228491.1316	2895484.7460	W70.2256530	N43.2736127
LB-3	228473.9539	2895507.7880	W70.2256217	N43.2735958
LB-8	228394.7680	2895765.9460	W70.2252714	N43.2735182
WB-1	228600.2367	2895310.1868	W70.2258901	N43.2737200
WB-2	228618.6209	2895404.4100	W70.2257624	N43.2737384
WB-3	228587.8279	2895361.5094	W70.2258204	N43.2737079
WB-4	228566.1309	2895421.9060	W70.2257385	N43.2736866

BORING LOCATIONS

BORING ID	NORTHING	EASTING	LONGITUDE	LATITUDE
ADD-1	228452.7149	2895499.3250	W70.2256331	N43.2735748
ADD-8	228365.9058	2895759.6110	W70.2252799	N43.2734897
ADD-9	228340.5054	2895746.7690	W70.2252972	N43.2734646
HP-1	228497.6520	2895482.1026	W70.2256566	N43.2736191
HP-2	228513.6726	2895503.0285	W70.2256283	N43.2736350
HP-3	228533.1223	2895461.2100	W70.2256851	N43.2736541
HP-4	228547.8975	2895443.6208	W70.2257090	N43.2736686
P-1	228577.9008	2895403.9741	W70.2257628	N43.2736982
P-2	228559.0882	2895420.8334	W70.2257399	N43.2736796

ELEVATION	MLLW	NAVD88*
BFE	+19.0	+14.0
HAT	+11.6	+6.6
MHHW	+9.7	+4.7
MHW	+9.3	+4.3
MSL	+4.8	-0.2
MLW	+0.3	-4.7
MLLW	0.0	-5.0

*PROJECT DATUM

0 30 60
SCALE, FEET

Attention:
0 1"
If this scale bar does not measure 1" then drawing is not original scale.

STATE OF MAINE
DANIEL J. BANNON
No. 13033
REGISTERED PROFESSIONAL ENGINEER
April 22, 2024

Designed:	DJB
Drawn:	JAM
Checked:	BJB
Approved:	BMM
P.E. No:	13033
GEI Project	2203703

GEI Consultants
GEI CONSULTANTS, INC.
5 MILK STREET
PORTLAND, ME 04101
(207)797-8901

UNE
UNIVERSITY OF NEW ENGLAND
11 HILLS BEACH RD.
BIDDEFORD, MAINE

UNIVERSITY OF NEW ENGLAND MARINE SCIENCE CENTER PIER

11 HILLS BEACH ROAD
BIDDEFORD, YORK COUNTY, MAINE

NO	DATE	ISSUE/REVISION	APP
4	9/14/2023	DEP PERMIT SET	DJB
3	6/28/2023	75% DESIGN SUBMISSION	DJB
2	2/15/2023	30% DESIGN SUBMISSION	DJB
1	12/9/2022	15% DESIGN SUBMISSIONREV	DJB
0	11/11/2022	15% DESIGN SUBMISSION	DJB

SHEET NAME
BORING LOCATION PLAN

SHEET NO.
B-001

FOR PERMIT

MORICI, ANTHONY \\geiconsultants.com\data\Data_Storage\Working\UNIVERSITY OF NEW ENGLAND\2203703 UNE Marine Science Center Pier\00_CAD\Design\Sheets\2203703-B-001.dwg - 9/14/2023



LEGEND:

- EXISTING CONTOUR
- HAT SETBACK
- MLLW
- MHHW
- HAT
- BFE
- 250' SHORELAND ZONE
- TOP OF BANK
- LEDGE
- STRUCTURES

SURVEY AND PROPERTY NOTES:

1. LOCUS PARCEL IS DEPICTED ON CITY OF BIDDEFORD, TAX MAP 52, LOT 4 AND IS LOCATED IN THE INSTITUTIONAL (IN) ZONE. A PORTION OF THE SITE IS LOCATED IN THE LIMITED RESIDENTIAL (LR) SHORELAND OVERLAY DISTRICT.
2. THE RECORD OWNER IS THE UNIVERSITY OF NEW ENGLAND, BY DEED DATED APRIL 18, 1962, RECORDED IN THE YORK COUNTY REGISTRY OF DEEDS IN BOOK 1484, PAGE 0145.
3. UPLAND TOPOGRAPHY AND BASE SURVEY INFORMATION DEPICTED HEREON ARE BASED ON THE FOLLOWING SURVEYS:
   - "TOPOGRAPHIC SURVEY, MARINE SCIENCE CENTER, UNIVERSITY OF NEW ENGLAND" BY OWEN HASKELL, INC. DATED DEC. 13, 2022.
   - "TOPOGRAPHIC SURVEY AT MARINE SCIENCE CENTER" BY STATEWIDE SURVEYS, INC., DATED MAY 4, 2015.
4. HYDROGRAPHIC DATA DEPICTED HEREON IS BASED ON 2022 SURVEY BY OWEN HASKELL SURVEY.
5. FEDERAL CHANNEL LIMITS ARE DEPICTED BASED ON THE PLAN. "SACO RIVER, SACE AND BIDDEFORD, MAINE, CONDITION SURVEY" PUBLISHED BY THE U.S. ARMY CORPS OF ENGINEERS, DATED JULY 3, 2021.
6. HORIZONTAL COORDINATES ARE BASED ON NAD83 MAINE STATE PLANE WEST ZONE-1801 AND ARE EXPRESSED IN FEET. ELEVATIONS ARE BASED ON NAVD88 VERTICAL DATUM.
7. UTILITY INFORMATION DEPICTED HEREON IS BASED ON FEBRUARY 2023 UTILITY LOCATION SURVEY PERFORMED BY BLOOD HOUND, LLC UNDERGROUND UTILITY LOCATORS AND MAY NOT NECESSARILY REPRESENT ALL EXISTING UTILITIES. CONTACT DIG SAFE (1-888-DIG-SAFE) AND VERIFY EXISTING UTILITIES PRIOR TO ANY CONSTRUCTION OR EXCAVATION.
8. PORTIONS OF THE PROPERTY ARE DEPICTED AS BEING IN A SPECIAL FLOOD HAZARD AREA BASED ON FEMA PRELIMINARY FIRM 23031C0459G DATED APRIL 14, 2017. THE SITE IS LOCATED IN A VE ZONE HAVING BASE FLOOD ELEVATION OF 14 FT NAVD88.
9. SUBSURFACE INFORMATION IS BASED ON EXPLORATIONS PERFORMED IN 2015 AND 2022 CONSISTING OF BORINGS, PROBES, AND TEST PITS. REFER TO SHEETS B-001 - B-005 FOR SUBSURFACE INFORMATION.
10. BENCHMARKS:

0 30 60
SCALE, FEET

ELEVATION	MLLW	NAVD88*
BFE	+19.0	+14.0
HAT	+11.6	+6.6
MHHW	+9.7	+4.7
MHW	+9.3	+4.3
MSL	+4.8	-0.2
MLW	+0.3	-4.7
MLLW	0.0	-5.0

*PROJECT DATUM

FOR PERMIT

Attention:
0 1"
If this scale bar does not measure 1" then drawing is not original scale.

STATE OF MAINE DANIEL J. BANNON No. 13033 PROFESSIONAL LICENSED ENGINEER
April 22, 2024

Designed:	DJB
Drawn:	JAM
Checked:	BJB
Approved:	BMM
P.E. No:	13033
GEI Project	2203703

GEI Consultants
GEI CONSULTANTS, INC.
5 MILK STREET
PORTLAND, ME 04101
(207)797-8901

UNE
UNIVERSITY OF NEW ENGLAND
11 HILLS BEACH RD.
BIDDEFORD, MAINE

UNIVERSITY OF NEW ENGLAND MARINE SCIENCE CENTER PIER

11 HILLS BEACH ROAD
BIDDEFORD, YORK COUNTY, MAINE

NO	DATE	ISSUE/REVISION	APP
4	9/14/2023	DEP PERMIT SET	DJB
3	6/28/2023	75% DESIGN SUBMISSION	DJB
2	2/15/2023	30% DESIGN SUBMISSION	DJB
1	12/9/2022	15% DESIGN SUBMISSIONREV	DJB
0	11/11/2022	15% DESIGN SUBMISSION	DJB

SHEET NAME
EXISTING CONDITIONS PLAN

SHEET NO.
C-001

MORICI, ANTHONY \\geiconsultants.com\data\Data_Storage\Working\UNIVERSITY OF NEW ENGLAND\2203703 UNE Marine Science Center Pier\00_CAD\Design\Sheets\2203703-C-001.dwg - 9/14/2023



LEGEND:

— — —LIMIT OF WORK

TREE TO BE REMOVED

NOTES:

1. CONTRACTOR SHALL COORDINATE STAGING OF ALL EQUIPMENT AND MATERIALS OUTSIDE OF THE LIMITS OF WORK AT OFF-SITE LOCATIONS AS APPROVED BY OWNER.
2. FIELD VERIFY EXTENTS OF EXPOSED LEDGE AND REVIEW WITH ENGINEER PRIOR TO REMOVAL.

0 20 40
SCALE, FEET

ELEVATION	MLLW	NAVD88*
BFE	+19.0	+14.0
HAT	+11.6	+6.6
MHHW	+9.7	+4.7
MHW	+9.3	+4.3
MSL	+4.8	-0.2
MLW	+0.3	-4.7
MLLW	0.0	-5.0

*PROJECT DATUM

FOR PERMIT

Attention:
0 1"
If this scale bar does not measure 1" then drawing is not original scale.

STATE OF MAINE
DANIEL J. BANNON
No. 13033
PROFESSIONAL
LICENSED ENGINEER
April 22, 2024

Designed:	DJB
Drawn:	JAM
Checked:	BJB
Approved:	BMM
P.E. No:	13033
GEI Project	2203703

GEI Consultants
GEI CONSULTANTS, INC.
5 MILK STREET
PORTLAND, ME 04101
(207)797-8901

UNIVERSITY OF NEW ENGLAND
11 HILLS BEACH RD.
BIDDEFORD, MAINE

UNIVERSITY OF NEW ENGLAND
MARINE SCIENCE CENTER PIER
11 HILLS BEACH ROAD
BIDDEFORD, YORK COUNTY, MAINE

NO	DATE	ISSUE/REVISION	APP
4	9/14/2023	DEP PERMIT SET	DJB
3	6/28/2023	75% DESIGN SUBMISSION	DJB
2	2/15/2023	30% DESIGN SUBMISSION	DJB
1	12/9/2022	15% DESIGN SUBMISSIONREV	DJB
0	11/11/2022	15% DESIGN SUBMISSION	DJB

SHEET NAME
DEMOLITION AND CONSTRUCTION STAGING

SHEET NO.
C-002

MORICI, ANTHONY \\geiconsultants.com\data\Data_Storage\Working\UNIVERSITY OF NEW ENGLAND\2203703 UNE Marine Science Center Pier\00_CAD\Design\Sheets\2203703-C-002.dwg - 9/14/2023

PROPOSED PIER SYSTEM
(SEE SHEETS S-001 - S-004).

REROUTE BEACH
ACCESS PATH
(BY OTHERS).

LEDGE & BOULDERS

LEDGE

STONY BEACH

TOP OF BANK

25' HAT SETBACK

PUMP

RIPRAP

R= 40'

N 49° 58' 46" W

26.23'

6+33.77

6+00

5+88.65

5+00

4+00

3+76.76

3+00

2+99.52

PATH

R=20'

R=20'

75' HAT SETBACK

INSTALL 300 LF
GUARDRAIL (SEE DETAIL).

LIMITS OF VEGETATION
CLEARING, TYP.

PROPOSED STORMWATER
COLLECTION RAIN GARDENS

IRF

WOOD LANDING

WOOD
STAIRS

RIPRAP

EDGE OF SAND
STONES & BOULDERS

BOTTOM OF LEDGE

TOP OF BANK

TBM 10" OAK
WITH PK NAIL
ELEV.=16.0'

ACCESS ROAD
TURNAROUND.

PROPOSED (2) "NO VEHICULAR
ACCESS BEYOND THIS POINT"
SIGNS, TYP. (SEE DETAIL)

SANDY RIVER BOTTOM

OUTCROP

LEDGE

IRF IN

TOP OF BANK

EDGE OF RIPRAP

IRON ROD
FOUND, BENT

RIPRAP

CONCRETE
PAD

LPG TANKS W/

DOOR

LEDGE

GATE

CONC.

HVAC

CONC.

THRESH=
33.02

FFE=32.96

THRESH=
33.01

CONC.

SHED
HVAC

GATE

PUMP

GRAVEL

RIPRAP

CONC.

TANKS

GIRARD MARINE
SCIENCE CENTER

2nd STORY OVERHANG

DOOR

FFE=32.92

THRESH=
33.00

THRESH=
32.97

PROPOSED R-1-1 30"X 30"
STOP SIGN, TYP
(SEE DETAIL).

LEDGE

8'
TYP

8'
TYP

2' WIDE
SHOULDER,
TYP.

GRAVEL

PROPOSED PAVED
ACCESS ROAD
(SEE DETAIL, SHEET C-008).

250' SHORELAND ZONE

PAVED WALK

GRAVEL

PROPOSED SAWCUT AND
SEALING OF EXISTING
PAVEMENT. MATCH INTO
EXISTING PAVEMENT TYP.

RIPRAP

R10'

R2'

2.00

1+90.83

1+47.32

PROPOSED 24" WIDE WHITE
STOP BAR, TYP (SEE DETAIL).

CONC.

SHED

CIRF STAMPED "CITY OF BIDDEFORD ZONE LINE"

TANK

PAVED

1+00

1+09.02

N: 228236.91
E: 2895702.79

WETLAND

PATH

WETLAND

WOODEN
RACK

BOULDERS

LEDGE

BUILDING
THRESH
=16.98

0 20 40
SCALE, FEET

CENTERLINE ALIGNMENT TABLE

SEGMENT ID	START	END	LENGTH (FEET)	CHORD LENGTH (FEET)	CURVE RADIUS (FEET)	DELTA ANGLE (DEGREES, MIN, SEC)
1	1+00	1+09.02	9.02			
2	1+09.02	1+47.32	38.30	38.26	241.93	9d4'13"
3	1+47.32	1+90.83	43.51	43.50	500.00	4d59'10"
4	1+90.83	2+99.52	108.69	108.35	400.00	15d34'5"
5	2+99.52	3+76.76	77.24	71.05	55.00	80d27'50"
6	3+76.76	5+88.65	211.89	209.42	400.00	30d21'2"
7	5+88.65	6+33.77	45.13	43.61	50.00	51d42'47"
8	6+33.77	6+60	26.23			

ELEVATION	MLLW	NAVD88*
BFE	+19.0	+14.0
HAT	+11.6	+6.6
MHHW	+9.7	+4.7
MHW	+9.3	+4.3
MSL	+4.8	-0.2
MLW	+0.3	-4.7
MLLW	0.0	-5.0

*PROJECT DATUM

Attention:
0 1"
If this scale bar does not measure 1" then drawing is not original scale.

STATE OF MAINE
DANIEL J. BANNON
No. 13033
PROFESSIONAL ENGINEER
LICENSED
April 22, 2024

Designed:	DJB
Drawn:	JAM
Checked:	BJB
Approved:	BMM
P.E. No:	13033
GEI Project	2203703

GEI Consultants
GEI CONSULTANTS, INC.
5 MILK STREET
PORTLAND, ME 04101
(207)797-8901

UNE
UNIVERSITY OF
NEW ENGLAND
11 HILLS BEACH RD.
BIDDEFORD, MAINE

UNIVERSITY OF NEW ENGLAND MARINE SCIENCE CENTER PIER

11 HILLS BEACH ROAD
BIDDEFORD, YORK COUNTY, MAINE

NO	DATE	ISSUE/REVISION	APP
4	9/14/2023	DEP PERMIT SET	DJB
3	6/28/2023	75% DESIGN SUBMISSION	DJB
2	2/15/2023	30% DESIGN SUBMISSION	DJB
1	12/9/2022	15% DESIGN SUBMISSIONREV	DJB
0	11/11/2022	15% DESIGN SUBMISSION	DJB

SHEET NAME
SITE PLAN

SHEET NO.
C-003

FOR PERMIT

MORICI, ANTHONY \\geiconsultants.com\data\Data_Storage\Working\UNIVERSITY OF NEW ENGLAND\2203703 UNE Marine Science Center Pier\00_CAD\Design\Sheets\2203703-C-003.dwg - 9/14/2023

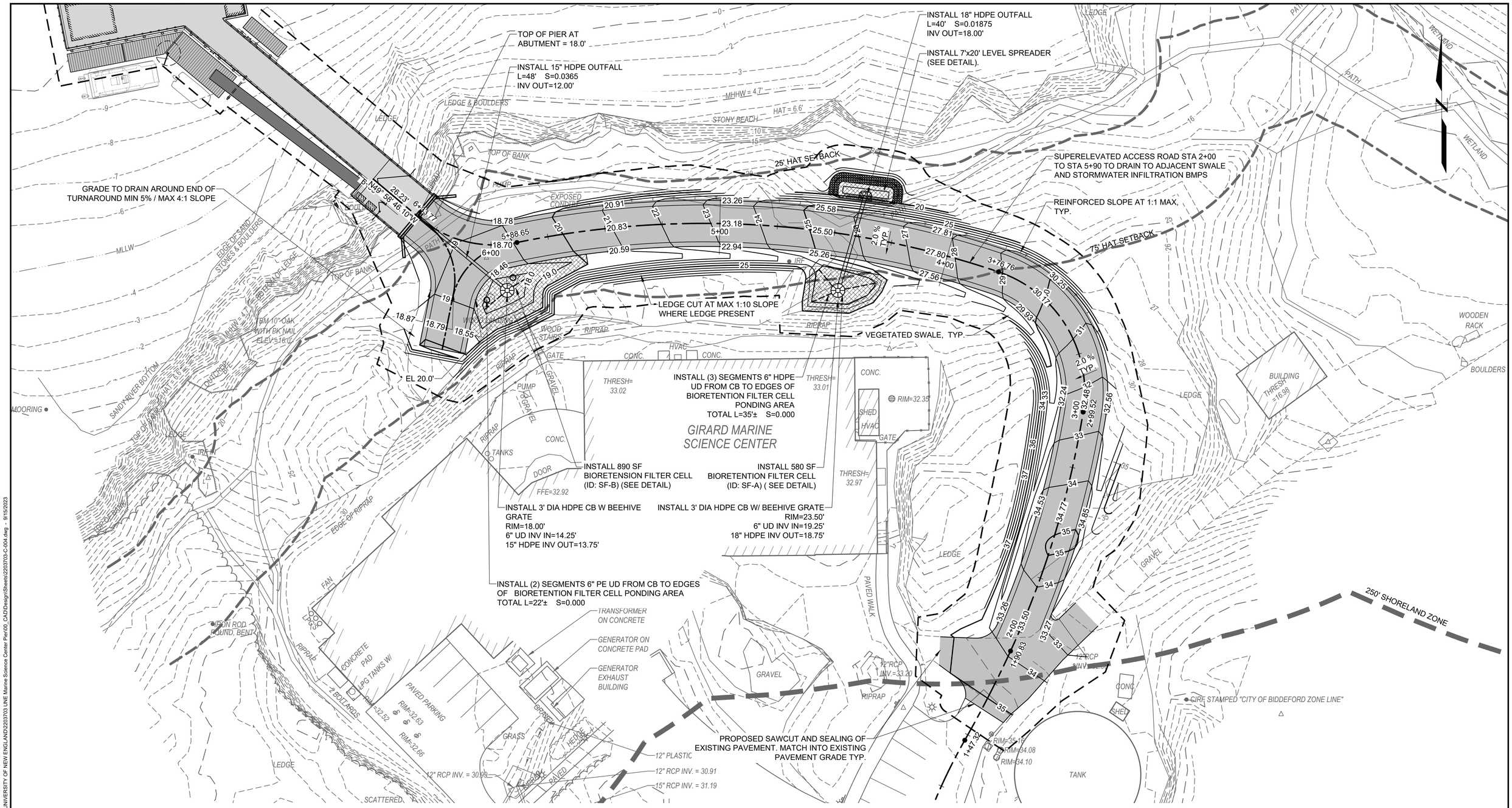

PLAN
SCALE: 1" = 20'

FOR PERMIT

Attention:
0 1"
If this scale bar does not measure 1" then drawing is not original scale.

0 20 40
SCALE, FEET

STATE OF MAINE
DANIEL J. BANNON
No. 13033
LICENSED
PROFESSIONAL ENGINEER
April 22, 2024

Designed:	DJB
Drawn:	JAM
Checked:	BJB
Approved:	BMM
P.E. No:	13033
GEI Project	2203703

GEI Consultants
GEI CONSULTANTS, INC.
5 MILK STREET
PORTLAND, ME 04101
(207)797-8901

UNIVERSITY OF NEW ENGLAND
11 HILLS BEACH RD.
BIDDEFORD, MAINE

UNIVERSITY OF NEW ENGLAND MARINE SCIENCE CENTER PIER
11 HILLS BEACH ROAD
BIDDEFORD, YORK COUNTY, MAINE

NO	DATE	ISSUE/REVISION	APP
4	9/14/2023	DEP PERMIT SET	DJB
3	6/28/2023	75% DESIGN SUBMISSION	DJB
2	2/15/2023	30% DESIGN SUBMISSION	DJB
1	12/9/2022	15% DESIGN SUBMISSIONREV	DJB
0	11/11/2022	15% DESIGN SUBMISSION	DJB

SHEET NAME
GRADING AND DRAINAGE PLAN

SHEET NO.
C-004

MORICI, ANTHONY \\gisconsultants.com\data\Data_Storage\Working\UNIVERSITY OF NEW ENGLAND\2203703 UNE Marine Science Center Pier\00_CAD\Design\Sheets\2203703-C-004.dwg - 9/15/2023

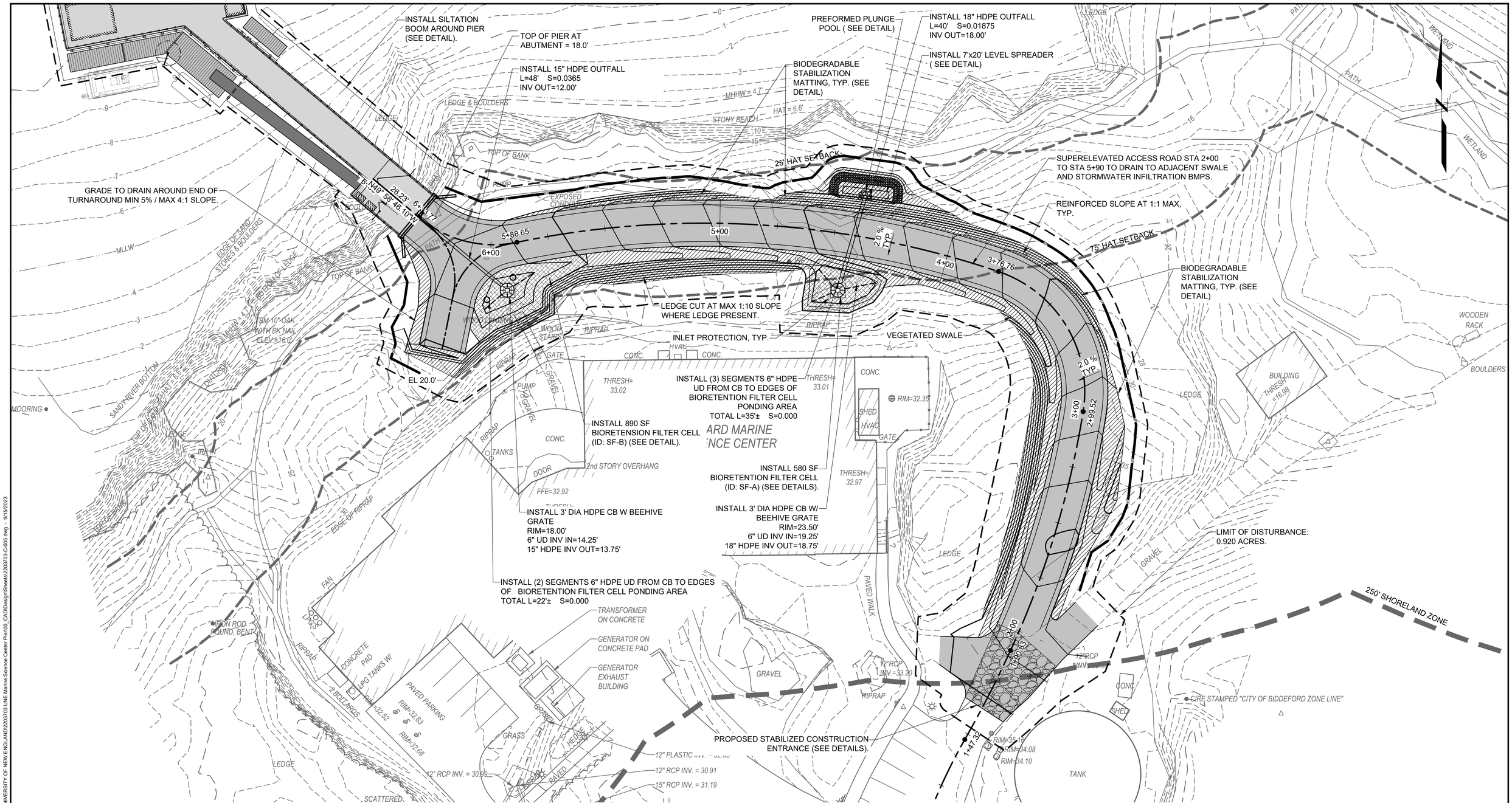

PLAN

SCALE: 1" = 20'

NOTE:
CONTRACTOR SHALL INSTALL BIODEGRADABLE STABILIZATION MATTING WHEREVER PROPOSED SLOPES EXCEED 5H:1V.

0 20 40
SCALE, FEET

FOR PERMIT

Attention:
0 1"
If this scale bar does not measure 1" then drawing is not original scale.

STATE OF MAINE — DANIEL J. BANNON No. 13033 — LICENSED PROFESSIONAL ENGINEER
April 22, 2024

Designed:	DJB
Drawn:	JAM
Checked:	BJB
Approved:	BMM
P.E. No:	13033
GEI Project	2203703

GEI Consultants
GEI CONSULTANTS, INC.
5 MILK STREET
PORTLAND, ME 04101
(207)797-8901

UNE
UNIVERSITY OF NEW ENGLAND
11 HILLS BEACH RD.
BIDDEFORD, MAINE

UNIVERSITY OF NEW ENGLAND MARINE SCIENCE CENTER PIER
11 HILLS BEACH ROAD
BIDDEFORD, YORK COUNTY, MAINE

NO	DATE	ISSUE/REVISION	APP
4	9/14/2023	DEP PERMIT SET	DJB
3	6/28/2023	75% DESIGN SUBMISSION	DJB
2	2/15/2023	30% DESIGN SUBMISSION	DJB
1	12/9/2022	15% DESIGN SUBMISSIONREV	DJB
0	11/11/2022	15% DESIGN SUBMISSION	DJB

SHEET NAME: **EROSION CONTROL PLAN**

SHEET NO.: **C-005**

MORICI, ANTHONY \\geiconsultants.com\data\Data_Storage\Working\UNIVERSITY OF NEW ENGLAND\2203703 UNE Marine Science Center Pier\00_CAD\Design\Sheets\2203703-C-005.dwg - 9/15/2023

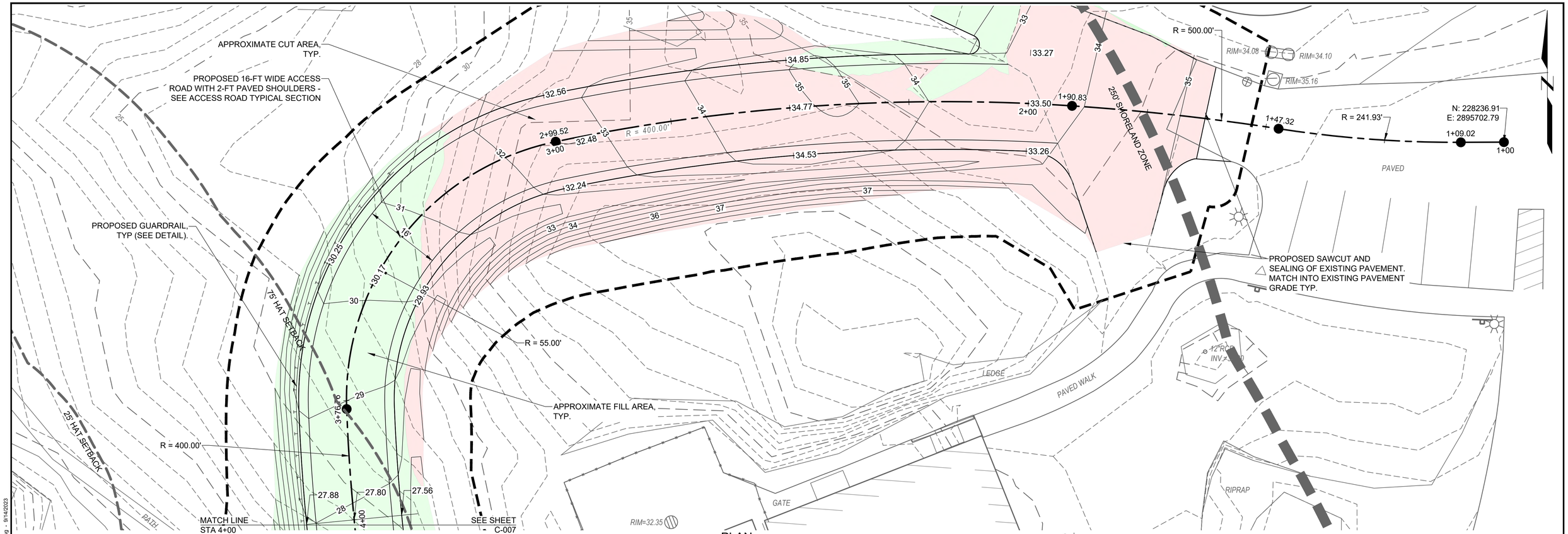

PLAN

SCALE: 1" = 10'

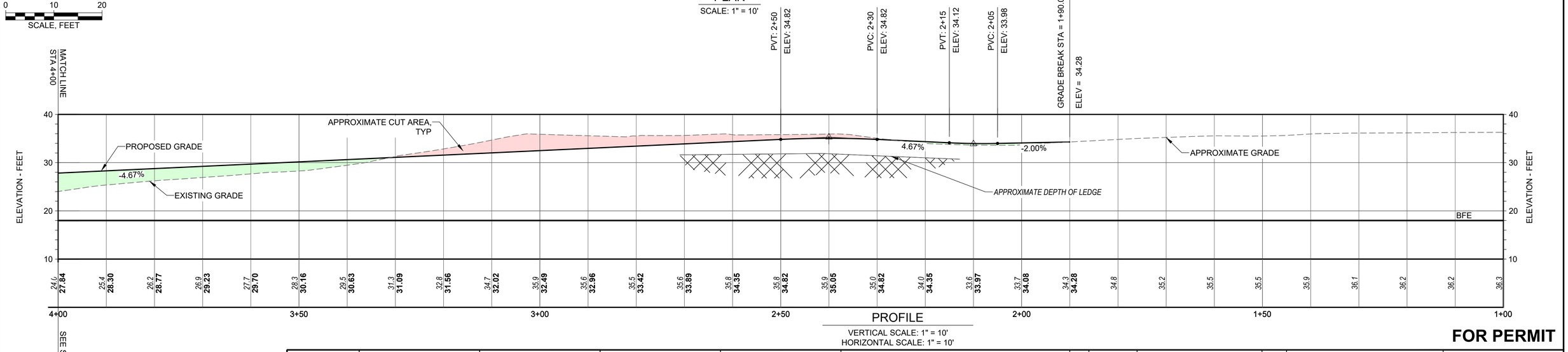

PROFILE

VERTICAL SCALE: 1" = 10'
HORIZONTAL SCALE: 1" = 10'

FOR PERMIT

Attention:

0 1"

If this scale bar does not measure 1" then drawing is not original scale.

STATE OF MAINE
DANIEL J. BANNON
No. 13033
LICENSED PROFESSIONAL ENGINEER
April 22, 2024

Designed:	DJB
Drawn:	JAM
Checked:	BJB
Approved:	BMM
P.E. No:	13033
GEI Project	2203703

GEI Consultants
GEI CONSULTANTS, INC.
5 MILK STREET
PORTLAND, ME 04101
(207)797-8901

UNE
UNIVERSITY OF NEW ENGLAND
11 HILLS BEACH RD.
BIDDEFORD, MAINE

UNIVERSITY OF NEW ENGLAND MARINE SCIENCE CENTER PIER
11 HILLS BEACH ROAD
BIDDEFORD, YORK COUNTY, MAINE

NO	DATE	ISSUE/REVISION	APP
4	9/14/2023	DEP PERMIT SET	DJB
3	6/28/2023	75% DESIGN SUBMISSION	DJB
2	2/15/2023	30% DESIGN SUBMISSION	DJB
1	12/9/2022	15% DESIGN SUBMISSIONREV	DJB
0	11/11/2022	15% DESIGN SUBMISSION	DJB

SHEET NAME

ACCESS ROAD PLAN AND PROFILE STA 1+00 TO 4+00

SHEET NO.

C-006

MORICI, ANTHONY \\geiconsultants.com\data\Data_Storage\Working\UNIVERSITY OF NEW ENGLAND\2203703 UNE Marine Science Center Pier\00_CAD\Design\Sheets\2203703-C-006 C-007.dwg - 9/14/2023

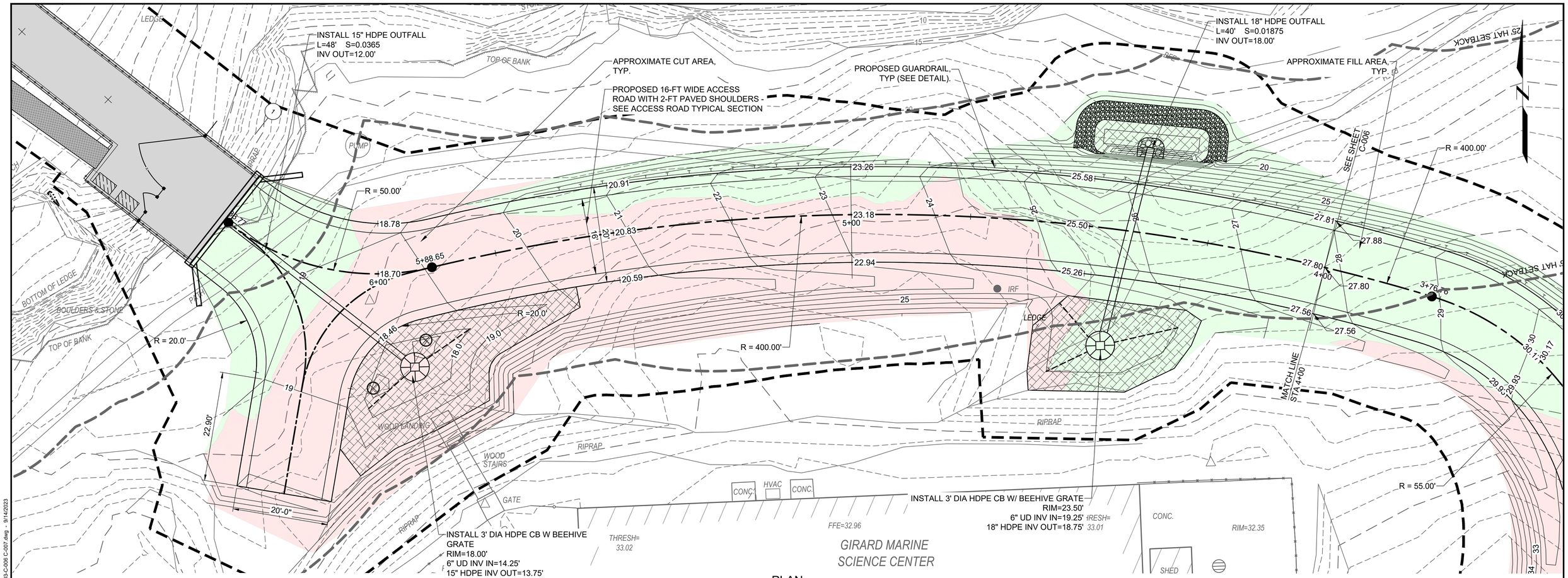

PLAN

SCALE: 1" = 10'

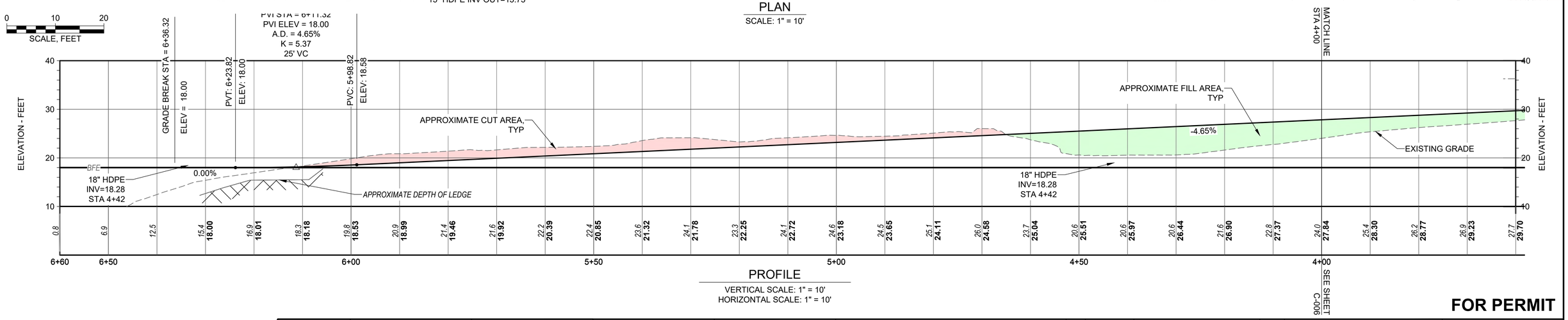

PROFILE

VERTICAL SCALE: 1" = 10'
HORIZONTAL SCALE: 1" = 10'

FOR PERMIT

Attention:

0 1"

If this scale bar does not measure 1" then drawing is not original scale.

STATE OF MAINE — DANIEL J. BANNON No. 13033 — LICENSED PROFESSIONAL ENGINEER

April 22, 2024

Designed:	DJB
Drawn:	JAM
Checked:	BJB
Approved:	BMM
P.E. No:	13033
GEI Project	2203703

GEI Consultants
GEI CONSULTANTS, INC.
5 MILK STREET
PORTLAND, ME 04101
(207)797-8901

UNE
UNIVERSITY OF NEW ENGLAND
11 HILLS BEACH RD.
BIDDEFORD, MAINE

UNIVERSITY OF NEW ENGLAND MARINE SCIENCE CENTER PIER

11 HILLS BEACH ROAD
BIDDEFORD, YORK COUNTY, MAINE

NO	DATE	ISSUE/REVISION	APP
4	9/14/2023	DEP PERMIT SET	DJB
3	6/28/2023	75% DESIGN SUBMISSION	DJB
2	2/15/2023	30% DESIGN SUBMISSION	DJB
1	12/9/2022	15% DESIGN SUBMISSIONREV	DJB
0	11/11/2022	15% DESIGN SUBMISSION	DJB

SHEET NAME

ACCESS ROAD PLAN AND PROFILE STA 4+00 TO STA 6+60

SHEET NO.

C-007

MORICI ANTHONY \\geiconsultants.com\data\Data_Storage\Working\UNIVERSITY OF NEW ENGLAND\2203703 UNE Marine Science Center Pier\00_CAD\Design\Sheets\2203703-C-006 C-007.dwg - 9/14/2023

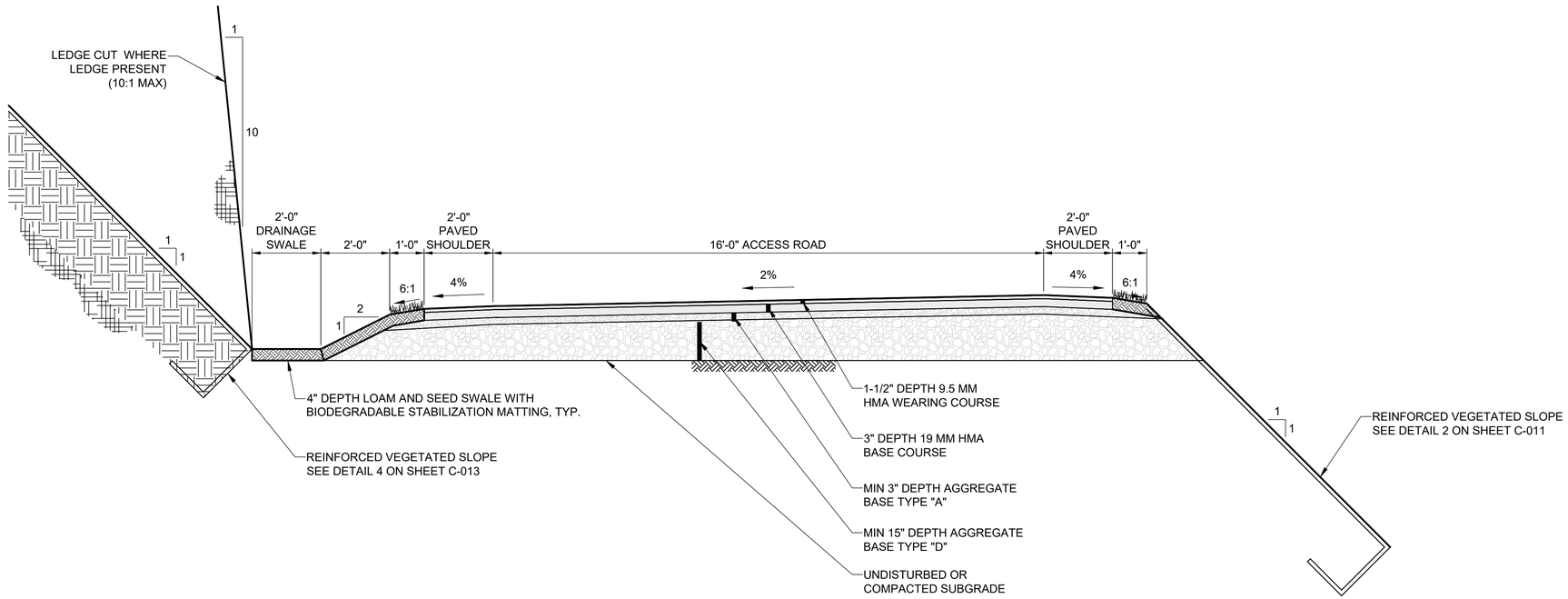

TYPICAL ACCESS ROAD SECTION

SCALE: NTS

FOR PERMIT

Attention:

0 1"

If this scale bar does not measure 1" then drawing is not original scale.

STATE OF MAINE
DANIEL J. BANNON
No. 13033
LICENSED PROFESSIONAL ENGINEER
April 22, 2024

Designed:	DJB
Drawn:	JAM
Checked:	BJB
Approved:	BMM
P.E. No:	13033
GEI Project	2203703

GEI Consultants
GEI CONSULTANTS, INC.
5 MILK STREET
PORTLAND, ME 04101
(207)797-8901

UNE
UNIVERSITY OF
NEW ENGLAND

11 HILLS BEACH RD.
BIDDEFORD, MAINE

UNIVERSITY OF NEW ENGLAND MARINE SCIENCE CENTER PIER

11 HILLS BEACH ROAD
BIDDEFORD, YORK COUNTY, MAINE

NO	DATE	ISSUE/REVISION	APP
4	9/14/2023	DEP PERMIT SET	DJB
3	6/28/2023	75% DESIGN SUBMISSION	DJB
2	2/15/2023	30% DESIGN SUBMISSION	DJB
1	12/9/2022	15% DESIGN SUBMISSIONREV	DJB
0	11/11/2022	15% DESIGN SUBMISSION	DJB

SHEET NAME

ACCESS ROAD TYPICAL SECTION

SHEET NO.

C-008

MORICI, ANTHONY \\geiconsultants.com\data\Data_Storage\Working\UNIVERSITY OF NEW ENGLAND\2203703 UNE Marine Science Center Pier\00_CAD\Design\Sheets\2203703-C-008.dwg - 9/15/2023

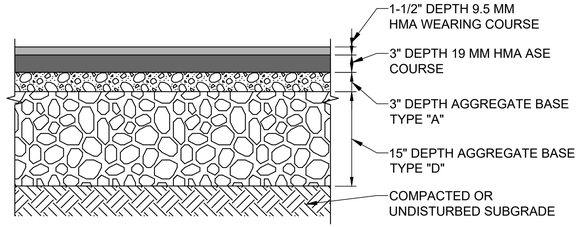

NOTES:
1. PAVEMENT DESIGN SHALL HAVE A MAINEDOT APPROVED JOB MIX FORMULA (JMF) WITHIN THE LATEST CALENDAR YEAR UNLESS OTHERWISE APPROVED BY OWNER.

1 HMA TRAVELWAY/SHOULDER TYPICAL SECTION

NO SCALE

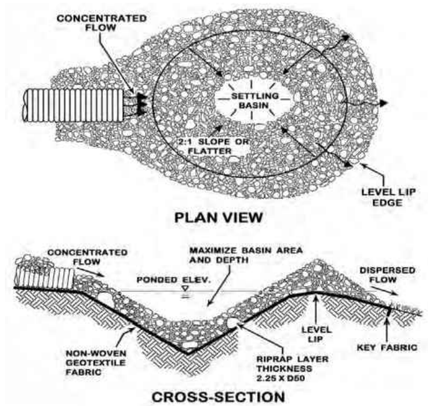

PLUNGE POOL SIZING (minimum)				
SIZE	RIPRAP SIZING (D_{50})	WIDTH At the narrow end of pipe	LENGTH For slow flows (no pressure head)	LENGTH For high flows (with pressure head)
12"	5"	3-4'	4-6'	8-10'
18"	8"	4-6'	6-8'	12-18'
24"	10"	6-8'	8-10'	18-22'
30"	12"	8-10'	12-14'	22-28'
36"	14"	10-12'	14-16'	28-32'

The diameter of the largest stone size in the mix should be about 1.5 times the D_{50} and the smallest one about one half the size. The thickness of riprap should never be less than 2 times the rock D_{50}.

NOTES:
1. IF THE PIPE DISCHARGES ONTO A FLAT AREA, THE APRON SHOULD HAVE A WIDTH THAT IS THREE TIMES THE OUTLET PIPE'S DIAMETER. IF THE PIPE FLOWS HAVE THE POTENTIAL OF CAUSING A GULLY, A LEVEL SPREADER SHOULD BE PROVIDED.
2. THE CHANNEL SIDE SLOPES SHOULD BE NO STEEPER THAN 2:1. RIPRAP ON THE SIDES OF THE PLUNGE POOL SHOULD EXTEND TO THE TOP OF THE CHANNEL.
3. THE PLUNGE POOL SIZING AND THE MEDIAN SIZED RIPRAP CAN BE DETERMINED FROM THE FOLLOWING TABLE. THE THICKNESS OF RIPRAP SHOULD NOT BE LESS THAN 2 TIMES THE ROCK D50.
4. A GEOTEXTILE OR APPROPRIATE GRAVEL FILTER SHOULD BE USED TO PROTECT AGAINST PIPING OF SOIL FINES FROM BENEATH THE ROCK.
5. IN A CHANNEL THAT CAN BE REVEGETATED, SEED AND MULCH SHOULD BE APPLIED WITHIN 7 DAYS FROM FINAL CONSTRUCTION..

2 PLUNGE POOL

NO SCALE

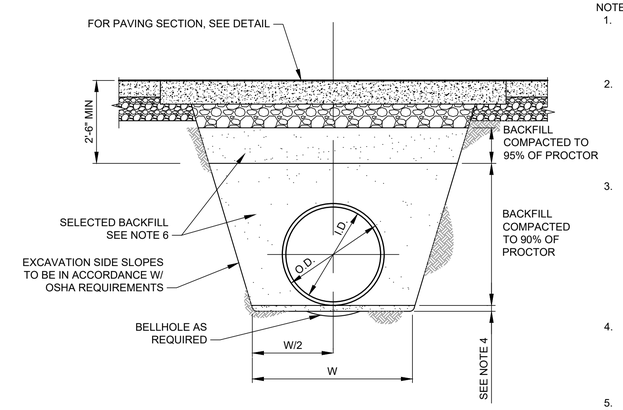

NOTES:
1. TRENCH BOTTOM OR BEDDING FOR ALL PIPE SHALL BE GRADED TO PROVIDE UNIFORM SUPPORT FOR THE ENTIRE LENGTH OF THE PIPE EXCEPT AT BELLHOLES.
2. BELLHOLES FOR PIPES SHALL HAVE A CLEARANCE OF 3" BETWEEN THE BOTTOM OF THE BELLHOLE AND THE EXTERIOR OF THE PIPE BARREL, BUT IN NO CASE SHALL BELLHOLES BE SMALLER THAN REQUIRED TO FACILITATE PLACING OF THE PIPE OR PROPER JOINING OF THE PIPE.
3. COMPACTION BACKFILL SHALL BE COMPACTED TO A DEGREE AT LEAST EQUIVALENT TO THE EXISTING DEGREE OF COMPACTING OF ADJACENT IN-PLACE EARTH MATERIALS AGAINST WHICH SUCH COMPACTED BACKFILL IS TO BE PLACED, OR TO A MIN OF 95% OF THE LABORATORY STANDARD MAX ASTM D698 DENSITY, WHICHEVER IS GREATER.
4. MIN 3" DEEP LAYER OF SCARIFIED MATERIAL WHEN IN HARD MATERIAL. IN UNSUITABLE MATERIAL, OVER EXCAVATE AS DIRECTED BY ENGINEER (6" MIN) AND REPLACE WITH COMPACTED BACKFILL.
5. W = PIPE O.D. + 24" MIN
6. ALL SELECTED BACKFILL IS TO BE IN CONFORMANCE WITH STATE STANDARD SPECIFICATION.

3 TRENCH

NO SCALE

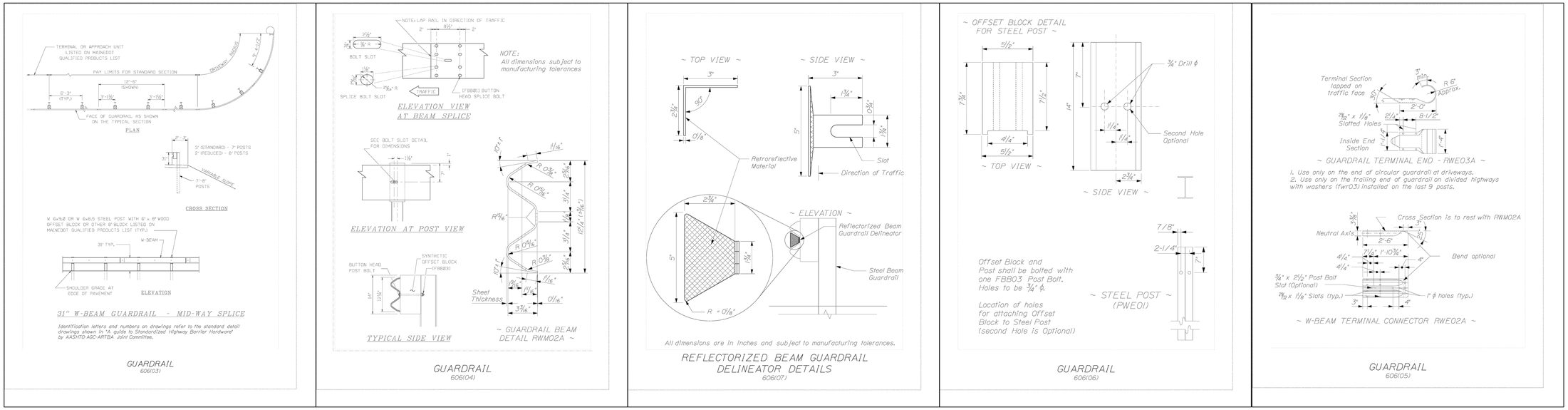

4 GUARD RAIL DETAILS

NO SCALE

FOR PERMIT

Attention:
0 1"
If this scale bar does not measure 1" then drawing is not original scale.

STATE OF MAINE DANIEL J. BANNON No. 13033 REGISTERED PROFESSIONAL ENGINEER
April 22, 2024

Designed:	DJB
Drawn:	JAM
Checked:	BJB
Approved:	BMM
P.E. No:	13033
GEI Project	2203703

GEI Consultants
GEI CONSULTANTS, INC.
5 MILK STREET
PORTLAND, ME 04101
(207)797-8901

UNE
UNIVERSITY OF NEW ENGLAND
11 HILLS BEACH RD.
BIDDEFORD, MAINE

UNIVERSITY OF NEW ENGLAND MARINE SCIENCE CENTER PIER
11 HILLS BEACH ROAD
BIDDEFORD, YORK COUNTY, MAINE

NO	DATE	ISSUE/REVISION	APP
4	9/14/2023	DEP PERMIT SET	DJB
3	6/28/2023	75% DESIGN SUBMISSION	DJB
2	2/15/2023	30% DESIGN SUBMISSION	DJB
1	12/9/2022	15% DESIGN SUBMISSIONREV	DJB
0	11/11/2022	15% DESIGN SUBMISSION	DJB

SHEET NAME: **SITE DETAILS**

SHEET NO.: **C-011**

MORICI, ANTHONY \\geiconsultants.com\data\Data_Storage\Working\UNIVERSITY OF NEW ENGLAND\2203703 UNE Marine Science Center Pier\00_CAD\Design\Sheets\2203703-C-DETAILS.dwg - 9/14/2023

EROSION AND SEDIMENTATION CONTROL NOTES:

INTRODUCTION

THE FOLLOWING PLAN FOR CONTROLLING SEDIMENTATION AND EROSION IN THIS PROJECT IS BASED ON CONSERVATION PRACTICES FOUND IN THE MAINE EROSION & SEDIMENT CONTROL BMPS MANUAL, OCTOBER 2016, AND MAINE EROSION AND SEDIMENT CONTROL PRACTICE FIELD GUIDE FOR CONTRACTORS, REVISED 2014, MAINE DEPARTMENT OF ENVIRONMENTAL PROTECTION. THE CONTRACTOR WHO IMPLEMENTS THIS PLAN SHALL BE FAMILIAR WITH THESE PUBLICATIONS AND ADHERE TO THEM AND THE PRACTICES PRESENTED HEREIN REFERENCE IS MADE TO THE EROSION CONTROL PLANS AND DETAILS (C-005 AND C-013) WITHIN THE PLAN SET, SHOWING THE LOCATIONS AND TYPES OF PROPOSED MEASURES TO BE IMPLEMENTED.

GENERAL EROSION AND SEDIMENTATION CONTROL NOTES:

1. EROSION AND SEDIMENTATION CONTROL MEASURES ARE PROPOSED TO CONTROL ACCELERATED EROSION AND SEDIMENTATION AND REDUCE ADVERSE IMPACTS FROM RUNOFF AND EROSION AT THE WORK SITE.
2. APPLICATION OF TEMPORARY AND PERMANENT EROSION CONTROL MEASURES SHALL BE IN ACCORDANCE WITH THE LATEST EDITION OF THE MAINE EROSION AND SEDIMENT CONTROL BMP'S PUBLISHED BY MAINE DEP AND AVAILABLE AT: HTTPS://WWW.MAINE.GOV/DEP/LAND/EROSION/ESCBMPS/
3. THE WORK SHALL BE PERFORMED BY A CONTRACTOR THAT IS CERTIFIED BY MAINE DEP IN EROSION AND SEDIMENT CONTROL MEASURES. A CERTIFIED INDIVIDUAL SHALL BE ONSITE DURING ALL CONSTRUCTION ACTIVITY.
4. EROSION AND SEDIMENTATION DUE TO RUNOFF, TIDAL EXPOSURE, AND WAVE ACTION SHALL BE CONTROLLED BY STAGING CONSTRUCTION ACTIVITY TO MINIMIZE AREA AND TIME OF DISTURBANCE, APPLICATION OF SILT FENCE, BOOMS, BARRIERS, AND OTHER EROSION CONTROL MEASURES, AND PRESERVING NATURAL VEGETATION WHENEVER POSSIBLE.
5. THE CONTRACTOR'S SEQUENCE OF OPERATIONS AND SCHEDULE FOR WORK ACTIVITIES SHALL ACT TO MINIMIZE EXPOSURE TO EROSION.
6. THE CONTRACTOR SHALL INSTALL AND MAINTAIN A SILTATION BOOM AROUND THE PERIMETER OF THE WORK AREA FOR THE NEW PIER FOR THE DURATION OF WORK.
7. THE CONTRACTOR SHALL TAKE CARE TO LIMIT THE AREA OF SOIL DISTURBANCE TO THE MINIMUM NECESSARY TO COMPLETE THE WORK.
8. EROSION CONTROL MEASURES, SEEDING, AND VEGETATION SHALL BE INSPECTED WEEKLY AND AFTER RAINSTORMS, RUNOFF EVENTS, AND STORM EVENTS UNTIL FINAL ACCEPTANCE. REPAIRS SHALL BE MADE WHEN NO LONGER SERVICEABLE DUE TO DAMAGE OR ACCUMULATION OF SEDIMENT.
9. AT THE COMPLETION OF CONSTRUCTION, ALL DISTURBED AREAS SHALL BE RESTORED TO THEIR ORIGINAL CONDITION AND CONTOUR, UNLESS OTHERWISE INDICATED ON THE PLANS.

GENERAL EROSION AND SEDIMENTATION CONTROL PRACTICES

THE FOLLOWING IS A LIST OF GENERAL EROSION CONTROL PRACTICES THAT WILL BE USED TO PREVENT EROSION AND SEDIMENTATION BEFORE, DURING AND AFTER THE CONSTRUCTION OF THIS PROJECT. IN ADDITION, SPECIAL CARE SHALL BE USED AT ALL TIMES TO:

LIMIT DISTURBANCE AND, HENCE, EROSION

1. CORRECT ANY EROSION PROBLEMS IMMEDIATELY.
2. REGULARLY MONITOR THE IMPLEMENTED PRACTICES, ESPECIALLY AFTER EVERY RAINFALL.
3. REVEGETATE DISTURBED AREAS AS SOON AS POSSIBLE AFTER CONSTRUCTION.
4. CONFORM TO ALL REQUIREMENTS/STANDARDS OF THE SITE'S MAINE DEP EROSION & SEDIMENT CONTROL BMP MANUAL.

SILT FENCE AND/OR EROSION CONTROL MIX SEDIMENT BARRIERS

SILT FENCE AND/OR EROSION CONTROL MIX SEDIMENT BARRIERS WILL BE INSTALLED ALONG THE DOWN GRADIENT SIDE OF THE PROPOSED GROUND DISTURBANCE AREAS PRIOR TO ANY CONSTRUCTION ACTIVITIES WHERE SLOPES EXCEED 8% OR THERE IS FLOWING WATER BOTH SILT FENCE AND EROSION CONTROL MATTING BERMS SHALL BE USED.

CATCH BASIN PROTECTION

CATCH BASIN PROTECTION WILL BE INSTALLED AT THE FIRST DOWNGRADIENT CATCH BASIN IN STREET ADJACENT TO ANY CONSTRUCTION ACTIVITIES AND IN ALL ONSITE CATCH BASINS UNTIL SITE HAS BEEN COMPLETELY STABILIZED.

CONSTRUCTION PHASE

THE FOLLOWING GENERAL PRACTICES WILL BE IMPLEMENTED TO PREVENT EROSION DURING CONSTRUCTION ON THIS PROJECT:

1. EROSION AND SEDIMENTATION CONTROL BMPS SHALL BE INTALLED PRIOR TO THE COMMENCEMENT OF EARTHWORK ACTIVITIES.
2. ONLY THOSE AREAS UNDER ACTIVE CONSTRUCTION WILL BE CLEARED AND LEFT IN AN UNTREATED OR UNVEGETATED CONDITION. AN AREA NO LARGER THAN WHAT CAN BE MULCHED IN ONE DAY MAY BE OPEN AT ONCE. ONCE CONSTRUCTION OF AN AREA IS COMPLETE, FINAL GRADING, LOAMING AND SEEDING SHALL OCCUR IMMEDIATELY (REFER TO "POST CONSTRUCTION REVEGETATION" SECTION). IF DURING FINAL GRADING, LOAMING AND SEEDING CAN NOT OCCUR IMMEDIATELY, IT SHALL BE DONE PRIOR TO ANY STORM EVENT AND WITHIN 15 DAYS OF COMPLETING CONSTRUCTION IN THE AREA. IF FINAL GRADING, LOAMING AND SEEDING CANNOT OCCUR WITHIN 7 DAYS, OR IF THE AREA IS NOT UNDER ACTIVE CONSTRUCTION FOR A PERIOD LONGER THAN 7 DAYS, SEE ITEM NO. 4 BELOW.
3. PRIOR TO THE START OF CONSTRUCTION IN A SPECIFIC AREA, SILT FENCING SHALL BE INSTALLED ON DOWNGRADIENT PORTIONS OF THE SITE AS LOCATED ON THE PLANS TO PROTECT AGAINST ANY CONSTRUCTION RELATED EROSION.
4. TOPSOIL WILL BE STOCKPILED WHEN NECESSARY IN AREAS WHICH HAVE MINIMUM POTENTIAL FOR EROSION AND WILL BE KEPT AS FAR AS POSSIBLE FROM EXISTING DRAINAGE AREAS AND WETLANDS. ALL STOCKPILES EXPECTED TO REMAIN LONGER THAN 7 DAYS SHALL BE:
   A. TREATED WITH ANCHORED MULCH (WITHIN 5 DAYS OF THE LAST DEPOSIT OF STOCKPILED SOIL).
   B. SEEDED WITH CONSERVATION MIX AND MULCHED IMMEDIATELY.
   C. STOCKPILES SHALL BE EITHER PLACED UPHILL OF AN EXISTING SEDIMENT BARRIER ON THE SITE OR ENCIRCLED BY A HAY BALE OR SILT FENCE BARRIER THE FIRST DAY THAT STOCKPILING COMMENCES.
5. ALL DISTURBED AREAS EXPECTED TO REMAIN LONGER THAN 7 DAYS SHALL BE:
   A. TREATED WITH STRAW AT A RATE OF 70-90 LBS. PER 1000 SQUARE FEET FROM 4/16 TO 10/1, OR AT A RATE OF 150-200 LBS. PER 1000 SQUARE FEET FROM 10/1 TO 4/15.
   B. SEEDED WITH CONSERVATION MIX OF PERENNIAL RYE GRASS (1.0 LBS/1000 SQ.FT.) AND MULCHED IMMEDIATELY. FROM 10/1 TO 4/15, FOLLOW THE SEEDING RATES AS OUTLINED BELOW IN SUB-SECTION 4.D. OF THE "POST CONSTRUCTION REVEGETATION" SECTION.
   C. MONITORED EVERY TWO WEEKS UNTIL SEEDING CAN OCCUR AND REMULCHED AS NEEDED TO PROTECT SLOPES.
6. ALL GRADING WILL BE HELD TO A MAXIMUM 3:1 SLOPE WHERE PRACTICAL. GREATER SLOPES MAY BE USED WHERE THE BANKS ARE PROTECTED WITH SOFT ARMOUR MATTING, EROSION CONTROL MATTING, OR RIPRAP. ALL SLOPES WILL BE STABILIZED WITH PERMANENT SEEDING IMMEDIATELY AFTER FINAL GRADING IS COMPLETE. (IT IS UNDERSTOOD THAT IMMEDIATELY MEANS WITHIN 5 DAYS OF THE COMPLETION OF WORK. SEE POST-CONSTRUCTION REVEGETATION FOR SEEDING SPECIFICATION).
7. APPLICATION RATE MUST BE 2 BALES (70-90 LBS.) PER 1,000 SQUARE FEET OR 1.5 TO 2 TONS (90-100 BALES) PER ACRE TO COVER 75 TO 90% OF THE GROUND SURFACE. DRIVE OVER WITH TRACKED CONSTRUCTION EQUIPMENT ON GRADES OF 5% AND LESS.
8. CONSTRUCTION TRAFFIC WILL BE DIRECTED OVER THE EXISTING SITE ENTRANCE. THE ROAD SHALL BE SWEPT AND VACUUMED DAILY SHOULD SEDIMENT BE TRACKED ONTO IT.
9. ALL AREAS DRAINING TO A STORMWATER FILTER OR BMP SHALL BE STABILIZED PRIOR TO CONSTRUCTION OF FILTER MEDIA TO PREVENT SEDIMENT FROM CLOGGING MEDIA.

DEWATERING

1. ALL DEWATERING DISCHARGE LOCATIONS SHALL BE LOCATED ON RELATIVELY FLAT GROUND AT LEAST 75' FROM STREAMS AND 25' FROM WETLANDS. THE CONTRACTOR SHALL UTILIZE DIRTBAGS, EROSION CONTROL MIX BERMS, OR SIMILAR METHODS FOR FILTRATION OF DEWATERING AND SHALL CONFORM TO THE MAINE EROSION AND SEDIMENT CONTROL BMPS G-1, G-2, AND G-3.

POST CONSTRUCTION REVEGETATION

THE FOLLOWING GENERAL PRACTICES WILL BE IMPLEMENTED TO PREVENT EROSION AS SOON AS AN AREA IS READY TO UNDERGO FINAL GRADING:

1. A MINIMUM OF 6" OF LOAM WILL BE SPREAD OVER DISTURBED AREAS AND GRADED TO A UNIFORM DEPTH AND NATURAL APPEARANCE.
2. LAWN AREAS: "PARK MIX" GRASS SEED BY ALLEN, STERLING & LOTHROP (FALMOUTH, MAINE), OR APPROVED EQUAL.
3. MULCH SHALL BE HAY OR STRAW MULCHES THAT ARE DRY AND FREE FROM UNDESIRABLE SEEDS AND COURSE MATERIALS.
   A. APPLICATION RATE MUST BE 2 BALES (70-90 LBS.) PER 1,000 SQUARE FEET OR 1.5 TO 2 TONS (90-100 BALES) PER ACRE TO COVER 75 TO 90% OF THE GROUND SURFACE.
   B. DRIVE OVER WITH TRACKED CONSTRUCTION EQUIPMENT ON GRADES OF 5% AND LESS.
   C. BLANKET WITH TACKED PHOTODEGRADABLE/BIODEGRADABLE NETTING ON GRADES GREATER THAN 5%.
4. HYDRO-MULCH SHALL CONSIST OF A MIXTURE OF ASPHALT, WOOD FIBRE OR PAPER FIBRE AND WATER, WHICH IS SPRAYED OVER A SEEDED AREA. HYDRO-MULCH SHALL NOT BE USED BETWEEN 10/1 AND 4/15.
5. CONSTRUCTION SHALL BE PLANNED TO ELIMINATE THE NEED FOR SEEDING BETWEEN OCTOBER 1ST AND APRIL 15TH. SHOULD SEEDING BE NECESSARY BETWEEN THESE DATES, THE FOLLOWING PROCEDURE SHALL BE FOLLOWED:
   A. ONLY UNFROZEN LOAM SHALL BE USED.
   B. LOAMING, SEEDING AND MULCHING WILL NOT BE DONE OVER SNOW OR ICE COVER. IF SNOW EXISTS, IT MUST BE REMOVED PRIOR TO PLACEMENT OF SEED.
   C. WHERE PERMANENT SEEDING IS NECESSARY, ANNUAL WINTER RYE (1.2 LBS/1000 S.F.) SHALL BE SOWN INSTEAD OF THE PREVIOUSLY NOTED SEEDING RATE.
   D. WHERE TEMPORARY SEEDING IS REQUIRED, ANNUAL WINTER RYE (2.5 LBS/1000 S.F.) SHALL BE SOWN INSTEAD OF THE PREVIOUSLY NOTED SEEDING RATE.
   E. FERTILIZING, SEEDING AND MULCHING SHALL BE DONE ON LOAM THE DAY THE LOAM IS SPREAD.
   F. HAY MULCH SHALL BE SECURED WITH PHOTODEGRADABLE/BIODEGRADABLE NETTING. TRACKING BY MACHINERY ALONE WILL NOT SUFFICE. WINTER MULCHING RATES, SHALL BE DOUBLE AS SPECIFIED ABOVE IN SUBSECTION 3.A OF THE "POST CONSTRUCTION REVEGETATION" SECTION, SHOULD BE APPLIED DURING THIS PERIOD.
6. FOLLOWING FINAL SEEDING, THE SITE WILL BE INSPECTED EVERY 30 DAYS UNTIL 90% COVER HAS BEEN ESTABLISHED. RESEEDING WILL BE CARRIED OUT BY THE CONTRACTOR WITHIN 10 DAYS OF NOTIFICATION BY THE DESIGN PROFESSIONAL THAT THE EXISTING CATCH IS INADEQUATE.

MONITORING SCHEDULE

THE CONTRACTOR SHALL BE RESPONSIBLE FOR INSTALLING, MONITORING, MAINTAINING, REPAIRING, REPLACING AND REMOVING ALL OF THE EROSION AND SEDIMENTATION CONTROLS OR APPOINTING A QUALIFIED SUBCONTRACTOR TO DO SO. MAINTENANCE MEASURES WILL BE APPLIED AS NEEDED DURING THE ENTIRE CONSTRUCTION CYCLE. IMMEDIATELY FOLLOWING ANY SIGNIFICANT RAINFALL, AND AT LEAST ONCE A WEEK, A VISUAL INSPECTION WILL BE MADE OF ALL EROSION AND SEDIMENTATION CONTROLS AS FOLLOWS:

1. SILT FENCE SHALL BE INSPECTED AND REPAIRED. SEDIMENT TRAPPED BEHIND THESE BARRIERS SHALL BE EXCAVATED WHEN IT REACHES A DEPTH OF 6" AND REDISTRIBUTED TO AREAS UNDERGOING FINAL GRADING.
2. CONSTRUCTION ENTRANCE SHALL BE VISUALLY INSPECTED AND REPAIRED AS NEEDED. ANY AREAS SUBJECT TO RUTTING SHALL BE STABILIZED IMMEDIATELY. IF THE VOIDS OF THE CONSTRUCTION ENTRANCE BECOME FILLED WITH MUD, MORE CRUSHED STONE SHALL BE ADDED AS NEEDED. THE PUBLIC ROADWAY SHALL BE SWEPT AND VACUUMED SHOULD MUD BE DEPOSITED/TRACKED ONTO THEM.

STANDARDS FOR STABILIZING SITES FOR THE WINTER

THE FOLLOWING STANDARDS AND METHODOLOGIES SHALL BE USED FOR STABILIZING THE SITE DURING THE WINTER CONSTRUCTION PERIOD:

1. STANDARD FOR THE TIMELY STABILIZATION OF DISTURBED SLOPES (ANY AREA HAVING A GRADE GREATER THAN 25%) - THE CONTRACTOR WILL SEED AND MULCH ALL SLOPES TO BE VEGETATED BY SEPTEMBER 15TH. IF THE CONTRACTOR FAILS TO STABILIZE ANY SLOPE TO BE VEGETATED BY SEPTEMBER 15TH, THEN THE CONTRACTOR WILL TAKE ONE OF THE FOLLOWING ACTIONS TO STABILIZE THE SLOPE FOR LATE FALL AND WINTER.
   A. STABILIZE THE SOIL WITH TEMPORARY VEGETATION AND EROSION CONTROL MATS: BY OCTOBER 1ST THE CONTRACTOR WILL SEED THE DISTURBED SLOPE WITH WINTER RYE AT A RATE OF 3 POUNDS PER 1000 SQUARE FEET AND THEN INSTALL EROSION CONTROL MATS OR ANCHORED HAY MULCH OVER THE SEEDING AT TWICE THE RATE AS SPECIFIED ABOVE IN SUBSECTION 3.A OF THE "POST CONSTRUCTION REVEGETATION" SECTION. THE CONTRACTOR WILL MONITOR GROWTH OF THE RYE OVER THE NEXT 30 DAYS.
   B. STABILIZE THE SLOPE WITH WOOD-WASTE COMPOST: THE CONTRACTOR WILL PLACE A SIX-INCH LAYER OF WOOD-WASTE COMPOST ON THE SLOPE BY NOVEMBER 15TH. THE CONTRACTOR WILL NOT USE WOOD-WASTE COMPOST TO STABILIZE SLOPES HAVING GRADES GREATER THAN 50% (2H:IV) OR HAVING GROUNDWATER SEEPS ON THE SLOPE FACE.
   C. STABILIZE THE SLOPE WITH STONE RIPRAP: THE CONTRACTOR WILL PLACE A LAYER OF STONE RIPRAP ON THE SLOPE BY NOVEMBER 15TH. THE DEVELOPMENT'S OWNER WILL HIRE A REGISTERED PROFESSIONAL ENGINEER TO DETERMINE THE STONE SIZE NEEDED FOR STABILITY ON THE SLOPE AND TO DESIGN A FILTER LAYER FOR UNDERNEATH THE RIPRAP.

STANDARD FOR THE TIMELY STABILIZATION OF DISTURBED SOILS - BY SEPTEMBER 15TH THE CONTRACTOR WILL SEED AND MULCH ALL DISTURBED SOILS ON THE SITE. IF THE CONTRACTOR FAILS TO STABILIZE THESE SOILS BY THIS DATE, THEN THE CONTRACTOR WILL TAKE ON OF THE FOLLOWING ACTIONS TO STABILIZE THE SOIL FOR LATE FALL AND WINTER.

   A. STABILIZE THE SOIL WITH TEMPORARY VEGETATION: BY OCTOBER 1ST THE CONTRACTOR WILL SEED THE DISTURBED SOIL WITH WINTER RYE AT A SEEDING RATE OF 3 POUNDS PER 1000 SQUARE FEET, LIGHTLY MULCH THE SEEDED SOIL WITH HAY OR STRAW AT 75 POUNDS PER 1000 SQUARE FEET, AND ANCHOR THE MULCH WITH PLASTIC NETTING. THE CONTRACTOR WILL MONITOR GROWTH OF THE RYE OVER THE NEXT 30 DAYS. IF THE RYE FAILS TO GROW AT LEAST THREE INCHES OR FAILS TO COVER AT LEAST 75% OF THE DISTURBED SOIL BEFORE NOVEMBER, 1, THEN THE CONTRACTOR WILL MULCH THE AREA FOR OVER-WINTER PROTECTION AS DESCRIBED IN ITEM III OF THIS STANDARD.
   B. STABILIZE THE SOIL WITH SOD: THE CONTRACTOR WILL STABILIZE THE DISTURBED SOIL WITH PROPERLY INSTALLED SOD BY OCTOBER 1ST. PROPER INSTALLATION INCLUDES THE CONTRACTOR PINNING THE SOD ONTO THE SOIL WITH WIRE PINS, ROLLING THE SOD TO GUARANTEE CONTACT BETWEEN THE SOD AND UNDERLYING SOIL, AND WATERING THE SOD TO PROMOTE ROOT GROWTH INTO THE DISTURBED SOIL.
   C. STABILIZE THE SOIL WITH MULCH: BY NOVEMBER 15TH THE CONTRACTOR WILL MULCH THE DISTURBED SOIL BY SPREADING HAY OR STRAW AT A RATE OF AT LEAST 150 POUNDS PER 1000 SQUARE FEET ON THE AREA SO THAT NO SOIL IS VISIBLE THROUGH THE MULCH. IMMEDIATELY AFTER APPLYING THE MULCH, THE CONTRACTOR WILL ANCHOR THE MULCH WITH NETTING OR OTHER METHOD TO PREVENT WIND FROM MOVING THE MULCH OFF THE DISTURBED SOIL.

EROSION CONTROL REMOVAL

AN AREA IS CONSIDERED STABLE IF IT IS PAVED OR IF 90% GROWTH OF PLANTED SEEDS IS ESTABLISHED. ONCE AN AREA IS CONSIDERED STABLE, THE EROSION CONTROL MEASURES CAN BE REMOVED AS FOLLOWS:

1. SILT FENCE: SILT FENCE SHALL BE DISPOSED OF LEGALLY AND PROPERLY OFF-SITE. ALL SEDIMENT TRAPPED BEHIND THESE CONTROLS SHALL BE DISTRIBUTED TO AN AREA UNDERGOING FINAL GRADING OR REMOVED AND RELOCATED OFF-SITE.
2. STABILIZED CONSTRUCTION ENTRANCE: THE STABILIZED CONSTRUCTION ENTRANCE SHALL BE REMOVED ONCE THE COMPACTED ROADWAY BASE IN IN PLACE. STONE AND SEDIMENT FROM THE CONSTRUCTION ENTRANCE SHALL BE REDISTRIBUTED TO AN AREA UNDERGOING GRADING OR REMOVED AND RELOCATED OFFSITE.
3. MISCELLANEOUS: ONCE ALL THE TRAPPED SEDIMENTS HAVE BEEN REMOVED FROM THE TEMPORARY SEDIMENTATION DEVICES THE DISTURBED AREAS MUST BE REGRADED IN AN AESTHETIC MANNER TO CONFORM TO THE SURROUNDING TOPOGRAPHY. ONCE GRADED THESE DISTURBED AREAS MUST BE LOAMED (IF NECESSARY), FERTILIZED, SEEDED AND MULCHED IN ACCORDANCE WITH THE RATES PREVIOUSLY STATED.

THE ABOVE EROSION CONTROLS MUST BE REMOVED WITHIN 30 DAYS OF FINAL STABILIZATION OF THE SITE. CONFORMANCE WITH THIS PLAN AND FOLLOWING THESE PRACTICES WILL RESULT IN A PROJECT THAT COMPLIES WITH THE STATE REGULATIONS AND THE STANDARDS OF THE NATURAL RESOURCES PROTECTION ACT, AND WILL PROTECT WATER QUALITY IN AREAS DOWNSTREAM ROM THE PROJECT.

MAINE CONSTRUCTION GENERAL PERMIT REQUIRED

SUBMISSION OF A MAINE CONSTRUCTION GENERAL PERMIT (MCGP) IS REQUIRED PRIOR TO COMMENCEMENT OF ANY EXCAVATION ACTIVITIES.

INSPECTION AND MAINTENANCE (APPENDIX B)

1. INSPECTION AND MAINTENANCE REQUIREMENTS: INSPECT DISTURBED AND IMPERVIOUS AREAS, EROSION AND STORMWATER CONTROL MEASURES, AREAS USED FOR STORAGE THAT ARE EXPOSED TO PRECIPITATION, AND LOCATIONS WHERE VEHICLES ENTER OR EXIT THE SITE. INSPECT THESE AREAS AT LEAST ONCE A WEEK AS WELL AS BEFORE AND AFTER A SIGNIFICANT STORM EVENT (0.5 INCHES OF RAINFALL IN A 24-HOUR PERIOD) AND PRIOR TO COMPLETION OF PERMANENT STABILIZATION MEASURES. A PERSON WITH KNOWLEDGE OF EROSION AND STORMWATER CONTROL, INCLUDING THE STANDARDS IN THE MCGP AND ANY DEPARTMENTAL COMPANION DOCUMENT TO THE MCGP, MUST CONDUCT THE INSPECTION. THIS PERSON MUST BE IDENTIFIED IN THE INSPECTION LOG. IF BEST MANAGEMENT PRACTICES (BMPS) NEED TO BE MODIFIED OR IF ADDITIONAL BMPS ARE NECESSARY, IMPLEMENTATION MUST BE STARTED BY THE END OF THE NEXT WORKIN DAY AND COMPLETED WITHIN 7 CALENDAR DAYS AND PRIOR TO ANY STORM EVENT (RAINFALL). ALL MEASURES MUST BE MAINTAINED IN EFFECTIVE OPERATING CONDITION UNTIL AREAS AREA PERMANENTLY STABILIZED. DOCUMENTATION OF CORRECTION ACTIONS SHALL BE MAINTAINED WITH THE INSPECTION FORMS.
2. INSPECTION LOG (REPORT): A LOG (REPORT) MUST BE KEPT SUMMARIZING THE SCOPE OF THE INSPECTION, NAME(S) AND QUALIFICATIONS OF THE PERSONNEL MAKING THE INSPECTION, THE DATE(S) OF THE INSPECTION, AND MAJOR OBSERVATIONS RELATING TO OPERATION OF EROSION AND SEDIMENTATION CONTROLS AND POLLUTION PREVENTION MEASURES. MAJOR OBSERVATIONS MUST INCLUDE BMPS THAT NEED MAINTENANCE, BMPS THAT FAILED TO OPERATE AS DESIGNED OR PROVED INADEQUATE FOR A PARTICULAR LOCATION, AND LOCATIONS(S) WHERE ADDITIONAL BMPS ARE NEEDED. FOR EACH BMP REQUIRING MAINTENANCE, BMP NEEDING REPLACEMENT, AND LOCATION NEEDING ADDITIONAL BMPS, NOTE IN THE INSPECTION LOG THE CORRECT ACTION TAKEN AND WHEN IT WAS TAKEN. THE LOG MUST BE MADE ACCESSIBLE TO THE DEPARTMENT STAFF AND A COPY MUST BE PROVIDED UPON REQUEST. THE PERMITTEE SHALL RETAIN A COPY OF THE LOG FOR A PERIOD OF AT LEAST THREE YEARS FROM THE COMPLETION OF THE PERMANENT STABILIZATION.

HOUSEKEEPING (APPENDIX C)

1. SPILL PREVENTION: CONTROLS MUST BE USED TO PREVENT POLLUTANTS FROM CONSTRUCTION AND WASTE MATERIALS STORED ON SITE TO ENTER STORMWATER, WHICH INCLUDES STORAGE PRACTICES TO MINIMIZE EXPOSURE OF THE MATERIALS TO STORMWATER. THE SITE CONTRACTOR OR OPERATOR MUST DEVELOP, AND IMPLEMENT AS NECESSARY, APPROPRIATE SPILL PREVENTION, CONTAINMENT, AND RESPONSE PLANNING MEASURES.

NOTE: ANY SPILL OR RELEASE OF TOXIC OR HAZARDOUS SUBSTANCES MUST BE REPORTED TO THE DEPARTMENT. FOR OIL SPILLS, CALL 1-800-482-0777 WHICH IS AVAILABLE 24 HOURS A DAY. FOR SPILLS OF TOXIC OR HAZARDOUS MATERIAL, CALL 1-800-452-4664 WHICH IS AVAILABLE 24 HOURS A DAY. FOR MORE INFORMATION, VISIT THE DEPARTMENT'S WEBSITE AT: HTTP://WWW.MAINE.GOV/DEP/SPILLS/EMERGSPILLRESP/

2. GROUNDWATER PROTECTION: DURING CONSTRUCTION, LIQUID PETROLEUM PRODUCTS AND OTHER HAZARDOUS MATERIALS WITH THE POTENTIAL TO CONTAMINATE GROUNDWATER MAY NOT BE STORED OR HANDLED IN AREAS OF THE SITE DRAINING TO AN INFILTRATION AREA. AN "INFILTRATION AREA" IS ANY AREA OF THE SITE THAT BY DESIGN OR AS A RESULT OF SOILS, TOPOGRAPHY AND OTHER RELEVANT FACTORS ACCUMULATES RUNOFF THAT INFILTRATES INTO THE SOIL. DIKES, BERMS, SUMPS, AND OTHER FORMS OF SECONDARY CONTAINMENT THAT PREVENT DISCHARGE TO GROUNDWATER MAY BE USED TO ISOLATE PORTIONS OF THE SITE FOR THE PURPOSES OF STORAGE AND HANDLING OF THESE MATERIALS. ANY PROJECT PROPOSING INFILTRATION OF STORMWATER MUST PROVIDE ADEQUATE PRE-TREATMENT OF STORMWATER PRIOR TO DISCHARGE OF STORMWATER TO THE INFILTRATION AREA, OR PROVIDE FOR TREATMENT WITHIN THE INFILTRATION AREA, IN ORDER TO PREVENT THE ACCUMULATION OF FINES, REDUCTION IN INFILTRATION RATE, AND CONSEQUENT FLOODING AND DESTABILIZATION.

NOTE: LACK OF APPROPRIATE POLLUTANT REMOVAL BEST MANAGEMENT PRACTICES (BMPS) MAY RESULT IN VIOLATIONS OF THE GROUNDWATER QUALITY STANDARD ESTABLISHED BY 38 M.R.S.A. §465-C(1).

3. FUGITIVE SEDIMENT AND DUST: ACTIONS MUST BE TAKEN TO ENSURE THAT ACTIVITIES DO NOT RESULT IN NOTICEABLE EROSION OF SOILS OR FUGITIVE DUST EMISSIONS DURING OR AFTER CONSTRUCTION. OIL MAY NOT BE USED FOR DUST CONTROL, BUT OTHER WATER ADDITIVES MAY BE CONSIDERED AS NEEDED. A STABILIZED CONSTRUCTION ENTRANCE (SCE) SHOULD BE INCLUDED TO MINIMIZE TRACKING OF MUD AND SEDIMENT. IF OFF-SITE TRACKING OCCURS, PUBLIC ROADS SHOULD BE SWEPT IMMEDIATELY AND NO LESS THAN ONCE A WEEK AND PRIOR TO SIGNIFICANT STORM EVENTS. OPERATIONS DURING DRY MONTHS, THAT EXPERIENCE FUGITIVE DUST PROBLEMS, SHOULD WET DOWN UNPAVED ACCESS ROADS ONCE A WEEK OR MORE FREQUENTLY AS NEEDED WITH A WATER ADDITIVE TO SUPPRESS FUGITIVE SEDIMENT AND DUST.

NOTE: DEWATERING A STREAM WITHOUT A PERMIT FROM THE DEPARTMENT MAY VIOLATE STATE WATER QUALITY STANDARDS AND THE NATURAL RESOURCES PROTECTION ACT.

4. DEBRIS AND OTHER MATERIALS: MINIMIZE THE EXPOSURE OF CONSTRUCTION DEBRIS, BUILDING AND LANDSCAPING MATERIALS, TRASH, FERTILIZERS, PESTICIDES, HERBICIDES, DETERGENTS, SANITARY WASTE AND OTHER MATERIALS TO PRECIPITATION AND STORMWATER RUNOFF. THESE MATERIALS MUST BE PREVENTED FROM BECOMING A POLLUTANT SOURCE.

NOTE: TO PREVENT THESE MATERIALS FROM BECOMING A SOURCE OF POLLUTANTS, CONSTRUCTION AND POST-CONSTRUCTION ACTIVITIES RELATED TO A PROJECT MAY BE REQUIRED TO COMPLY WITH APPLICABLE PROVISION OF RULES RELATED TO SOLID, UNIVERSAL, AND HAZARDOUS WASTE, INCLUDING, BUT NOT LIMITED TO, THE MAINE SOLID WASTE AND HAZARDOUS WASTE MANAGEMENT RULES; MAINE HAZARDOUS WASTE MANAGEMENT RULES; MAINE OIL CONVEYANCE AND STORAGE RULES; AND MAINE PESTICIDE REQUIREMENTS.

5. EXCAVATION DEWATERING: EXCAVATION DEWATERING IS THE REMOVAL OF WATER FROM TRENCHES, FOUNDATIONS, COFFER DAMS, PONDS, AND OTHER AREAS WITHIN THE CONSTRUCTION AREA THAT RETAIN WATER AFTER EXCAVATION. IN MOST CASES THE COLLECTED WATER IS HEAVILY SILTED AND HINDERS CORRECT AND SAFE CONSTRUCTION PRACTICES. THE COLLECTED WATER REMOVED FROM THE PONDED AREA, EITHER THROUGH GRAVITY OR PUMPING, MUST BE SPREAD THROUGH NATURAL WOODED BUFFERS OR REMOVED TO AREAS THAT ARE SPECIFICALLY DESIGNED TO COLLECT THE MAXIMUM AMOUNT OF SEDIMENT POSSIBLE, LIKE A COFFERDAM SEDIMENTATION BASIN. AVOID ALLOWING THE WATER TO FLOW OVER DISTURBED AREAS OF THE SITE. EQUIVALENT MEASURES MAY BE TAKEN IF APPROVED BY THE DEPARTMENT.

NOTE: DEWATERING CONTROLS ARE DISCUSSED IN THE "MAINE EROSION AND SEDIMENT CONTROL BMPS, MAINE DEPARTMENT OF ENVIRONMENTAL PROTECTION."

6. AUTHORIZED NON-STORMWATER DISCHARGES: IDENTIFY AND PREVENT CONTAMINATION BY NON-STORMWATER DISCHARGES. WHERE ALLOWED NON-STORMWATER DISCHARGES EXIST, THEY MUST BE IDENTIFIED AND STEPS SHOULD BE TAKEN TO ENSURE THE IMPLEMENTATION OF APPROPRIATE POLLUTION PREVENTION MEASURES FOR THE NON-STORMWATER COMPONENT(S) OF THE DISCHARGE. AUTHORIZED NON-STORMWATER DISCHARGES ARE:.
   - DISCHARGES FROM FIREFIGHTING ACTIVITY;
   - FIRE HYDRANT FLUSHINGS;
   - VEHICLE WASHWATER IF DETERGENTS ARE NOT USED AND WASHING IS LIMITED TO THE EXTERIOR OF VEHICLES (ENGINE, UNDERCARRIAGE, AND TRANSMISSION WASHING IS PROHIBITED);
   - DUST CONTROL RUNOFF IN ACCORDANCE WITH PERMIT CONDITIONS AND APPENDIX (C)(3);
   - ROUTINE EXTERNAL BUILDING WASHDOWN, NOT INCLUDING SURFACE PAINT REMOVAL, THAT DOES NOT INVOLVE DETERGENTS;
   - PAVEMENT WASHWATER (WHERE SPILLS/LEAKS OF TOXIC OR HAZARDOUS MATERIALS HAVE NOT OCCURRED, UNLESS ALL SPILLED MATERIAL HAD BEEN REMOVED) IF DETERGENTS ARE NOT USED;
   - UNCONTAMINATED AIR CONDITIONING OR COMPRESSOR CONDENSATE;
   - UNCONTAMINATED GROUNDWATER OR SPRING WATER;
   - FOUNDATION OR FOOTER DRAIN-WATER WHERE FLOWS ARE NOT CONTAMINATED;
   - UNCONTAMINATED EXCAVATION DEWATERING (SEE REQUIREMENTS IN APPENDIX C(5));
   - POTABLE WATER SOURCES INCLUDING WATERLINE FLUSHINGS; AND
   - LANDSCAPE IRRIGATION
7. UNAUTHORIZED NON-STORMWATER DISCHARGES: THE DEPARTMENT'S APPROVAL UNDER THIS CHAPTER DOES NOT AUTHORIZE A DISCHARGE THAT IS MIXED WITH A SOURCE OF NON-STORMWATER, OTHER THAN THOSE DISCHARGES IN COMPLIANCE WITH APPENDIX C (6). SPECIFICALLY, THE DEPARTMENT'S APPROVAL DOES NOT AUTHORIZE DISCHARGES OF THE FOLLOWING:
   - WASTEWATER FROM THE WASHOUT OR CLEANOUT OF CONCRETE, STUCCO, PAINT, FORM RELEASE OILS, CURING COMPOUNDS OR OTHER CONSTRUCTION MATERIALS;
   - FUELS, OILS OR OTHER POLLUTANTS USED IN VEHICLE AND EQUIPMENT OPERATION AND MAINTENANCE;
   - SOAPS, SOLVENTS, OR DETERGENTS USED IN VEHICLE AND EQUIPMENT WASHING; AND
   - TOXIC OR HAZARDOUS SUBSTANCES FROM A SPILL OR OTHER RELEASE.

ADDITIONAL REQUIREMENTS: ADDITIONAL REQUIREMENTS MAY BE APPLIED ON A SITE-SPECIFIC BASIS.

CONSTRUCTION OVERSITE

THE APPLICANT WILL RETAIN THE SERVICES OF A PROFESSIONAL ENGINEER TO INSPECT THE CONSTRUCTION AND STABILIZATION FOR ALL STORMWATER MANAGEMENT STRUCTURES. IF NECESSARY, THE INSPECTING ENGINEER WILL INTERPRET THE POND'S CONSTRUCTION PLAN FOR THE CONTRACTOR. ONCE

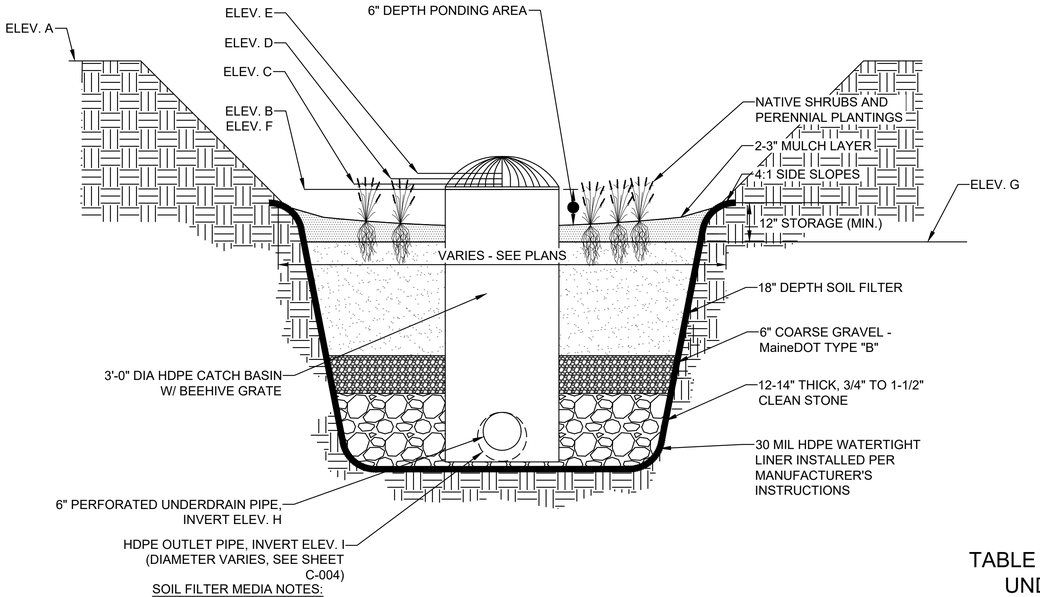

SOIL FILTER MEDIA NOTES:

SOIL FILTER MEDIA SHALL CONFORM TO MAINE DEP SOIL FILTER MEDIA OPTION 1, PER MAINE DEP STORMWATER BMP MANUAL CHAPTER 7.1. AS FOLLOWS:

1.1. SOIL FILTER MEDIA SHALL CONSIST OF A SILTY SAND SOIL OR SOIL MIXTURE COMBINED WITH A MATURE, MODERATELY FINE SHREDDED BARK OR WOOD FIBER MULCH.
1.2. THE RESULTING MIX SHALL CONTAIN NO LESS THAN 10% BY DRY WEIGHT ORGANIC MATERIAL.
1.3. THE RESULTING MIX SHALL CONTAIN 8% TO 12% PASSING THE NO. 200 SIEVE.
1.4. THE RESULTING MIX SHALL CONTAIN A MAXIMUM CLAY CONTENT OF 2%.

UNDERDRAIN OUTLET VALVE CALIBRATION NOTES:

AFTER THE COMPLETION OF INSTALLATION OF THE SOIL FILTER MEDIA, THE CONTRACTOR SHALL PERFORM THE FOLLOWING PROCEDURE TO CALIBRATE THE UNDERDRAIN OUTLET VALVE TO ACHIEVE THE 0.75"/HOUR DESIGN FLOW RATE.

1. BEGIN WITH VALVE HALF-OPEN.
2. CAREFULLY FLOOD THE BASIN UNTIL THERE IS 18" OF WATER STORED ABOVE THE SOIL FILTER MEDIA (UP TO THE HEIGHT OF OUTLET STRUCTURE RIM) WITHOUT CAUSING EROSION OF THE SOIL FILTER MEDIA.
3. RECORD THE TIME IT TAKES FOR THE 18" OF WATER TO DRAIN TO THE TOP OF THE SOIL FILTER MEDIA. THE TARGET DRAINDOWN TIME IS 24 HOURS.
4. IF THE 18" OF WATER DRAINS IN LESS THAN 24 HOURS, CLOSE THE VALVE SLIGHTLY AND REPEAT STEPS 2 & 3 ABOVE.
5. IF THE 18" OF WATER DRAINS IN MORE THAN 24 HOURS, OPEN THE VALVE SLIGHTLY AND REPEAT STEPS 2 & 3 ABOVE.
6. REPEAT THIS PROCESS UNTIL THE 18" OF WATER DRAINS IN 24 HOURS.

TABLE 1: MDOT SPECIFICATIONS FOR UNDERDRAINS (MDOT #703.22)

SIEVE SIZE	% BY WEIGHT
UNDERDRAIN TYPE B	
0'-1"	90-100
0'-0 1/2"	75-100
#4	50-100
#20	15-80
#50	0-15
#200	0-5

GRASSED UNDERDRAINED SOIL FILTER SCHEDULE

GRASSED UNDERDRAINED SOIL FILTER ID	EMBKMT. ELEV. [A]	WATER QUALITY STORM ELEV. [B]	2-YR STORM ELEV. [C]	10-YR STORM ELEV. [D]	25-YR STORM ELEV. [E]	TOP OF OUTLET STRUCT ELEV. [F]	BOTTOM OF STORAGE ELEV. [G]	INTERIOR UNDERDRAIN INVERT (START) [H]	UNDERDRAIN OUTLET INVERT [I]	FILTER AREA (SQ. FT.)
SF-A	24.50	23.50	23.62	23.67	23.71	23.50	23.00	19.25	18.75	580
SF-B	18.50	18.00	18.11	18.16	18.19	18.00	17.50	14.25	13.75	890

2 BIORETENTION FILTER CELL

NO SCALE

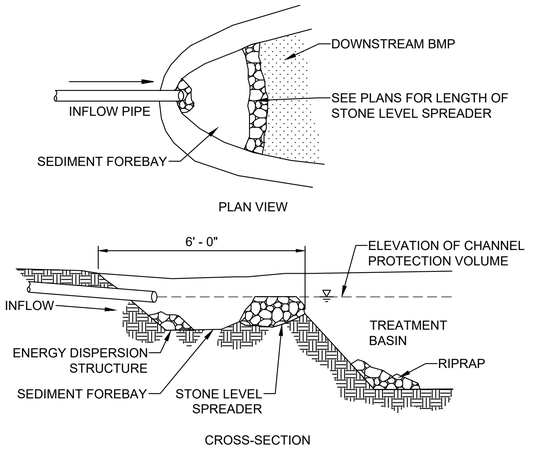

NOTES:
1. STONE SHALL BE AASHTO #3 STONE, UNIFORMLY GRADED, CLEAN.

3 LEVEL SPREADER DESIGN

NO SCALE

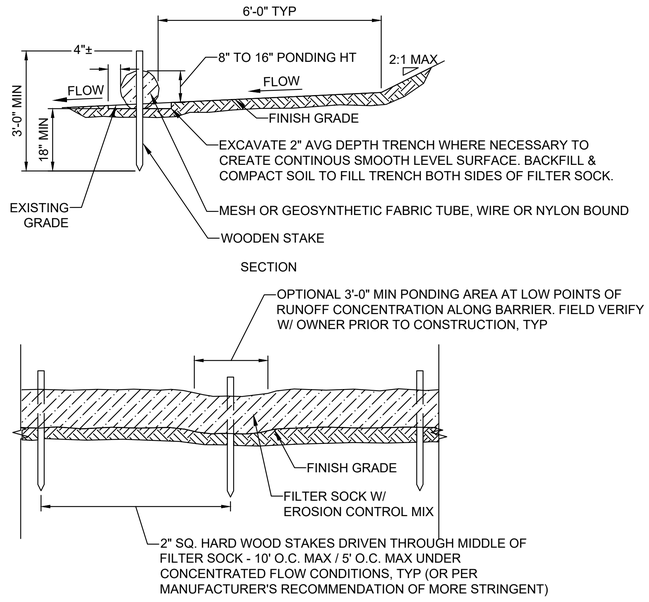

NOTES:
1. FILTER SOCKS SHALL BE INSTALLED IN CONTINUOUS SEGMENT AND IN FULL CONTACT WITH THE GROUND ON A SMOOTH LEVEL SURFACE.
2. FOLLOW MANUFACTURER'S REQUIREMENTS FOR INSTALLATION, MAINTENANCE AND REMOVAL OF FILTER SOCK MATERIALS.
3. AREAS DISTURBED BY EROSION BARRIERS SHALL BE STABILIZED AFTER REMOVAL.

1 SEDIMENT BARRIER - FILTER SOCK

NO SCALE

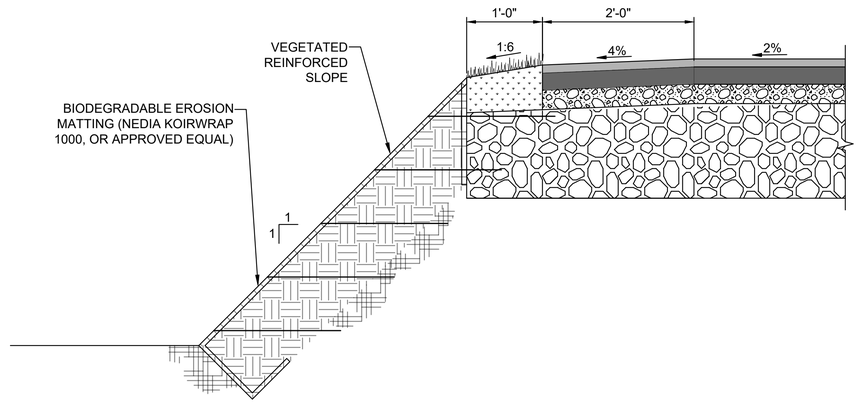

4 1:1 VEGETATED REINFORCED SLOPE

NO SCALE

FOR PERMIT

Attention: 0 1" — If this scale bar does not measure 1" then drawing is not original scale.

STATE OF MAINE — DANIEL J. BANNON No. 13033 — LICENSED PROFESSIONAL ENGINEER — APRIL 22, 2024

Designed:	DJB
Drawn:	JAM
Checked:	BJB
Approved:	BMM
P.E. No:	13033
GEI Project	2203703

GEI Consultants
GEI CONSULTANTS, INC.
5 MILK STREET
PORTLAND, ME 04101
(207)797-8901

UNIVERSITY OF NEW ENGLAND
11 HILLS BEACH RD.
BIDDEFORD, MAINE

UNIVERSITY OF NEW ENGLAND MARINE SCIENCE CENTER PIER
11 HILLS BEACH ROAD
BIDDEFORD, YORK COUNTY, MAINE

NO	DATE	ISSUE/REVISION	APP
4	9/14/2023	DEP PERMIT SET	DJB
3	6/28/2023	75% DESIGN SUBMISSION	DJB
2	2/15/2023	30% DESIGN SUBMISSION	DJB
1	12/9/2022	15% DESIGN SUBMISSIONREV	DJB
0	11/11/2022	15% DESIGN SUBMISSION	DJB

SHEET NAME: **EROSION CONTROL DETAILS I**

SHEET NO.: **C-013**

MORICI, ANTHONY \\geiconsultants.com\data\Data_Storage\Working\UNIVERSITY OF NEW ENGLAND\2203703 UNE Marine Science Center Pier\00_CAD\Design\Sheets\2203703-C-DETAILS.dwg - 9/15/2023

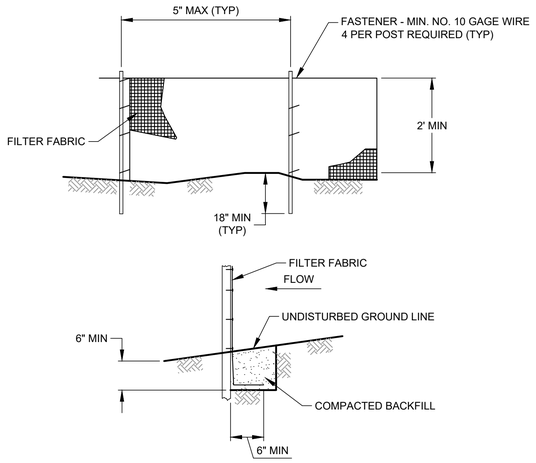

NOTES:
1. TEMPORARY SEDIMENT FENCE SHALL BE INSTALLED PRIOR TO ANY GRADING WORK IN THE AREA TO BE PROTECTED. THEY SHALL BE MAINTAINED THROUGHOUT THE CONSTRUCTION PERIOD AND REMOVED IN CONJUNCTION WITH THE FINAL GRADING AND SITE STABILIZATION.
2. FILTER FABRIC SHALL MEET THE REQUIREMENTS OF MATERIAL SPECIFICATION 592 GEOTEXTILE TABLE 1 OR 2, CLASS L WITH EQUIVALENT OPENING SIZE OF AT LEAST 30 FOR NONWOVEN AND 50 FOR WOVEN.
3. FENCE POSTS SHALL BE EITHER WOOD POST WITH A MINIMUM CROSS-SECTIONAL AREA OF 3 SQ. IN. OR A STANDARD STEEL POST.

5 SILT FENCE

NO SCALE

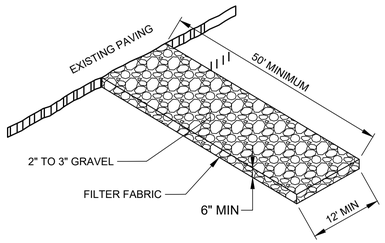

8 STABILIZED CONSTRUCTION ENTRANCE

NO SCALE

NOTES:
1. THE ENTRANCE/EXIT PAD SHOULD HAVE A LENGTH OF 50 FEET OR MORE AND A 12-FOOT MINIMUM WIDTH (OR AS APPROPRIATE TO CONTAIN THE WHEEL BASE OF CONSTRUCTION VEHICLES PLUS 3 FEET ON EITHER SIDE).
2. THE PAD SHOULD BE 6 INCHES OR MORE THICK WITH ANGULAR AGGREGATE (2-3 INCH DIAMETER). APPROPRIATE RECLAIMED CONCRETE MATERIAL MAY BE USED.
3. THE AGGREGATE SHOULD BE PLACED OVER A GEOTEXTILE FILTER TO PREVENT THE STONES FROM PUSHING INTO THE NATIVE SOIL.
4. AT THE BOTTOM OF SLOPES, A DIVERSION RIDGE SHOULD BE PROVIDED TO INTERCEPT RUNOFF.
5. BERMS MAY BE NECESSARY TO DIVERT WATER AROUND ANY EXPOSED SOIL, AND RUNOFF SHOULD BE DIRECTED TO A SEDIMENT TRAP.
6. THE WHEELS OF CONSTRUCTION EQUIPMENT MAY BE WASHED PRIOR TO EXITING THE SITE. WASHING SHOULD BE PERFORMED IN AN AREA THAT DRAINS TO A SEDIMENT TRAP OR BASIN.
7. THE PAD SHOULD BE INSPECTED WEEKLY, AND BEFORE AND AFTER EACH STORM. THE PAD MAY HAVE TO BE REPLACED IF THE VOIDS BECOME FILLED WITH SEDIMENT. STREET SWEEPING MAY BE NECESSARY

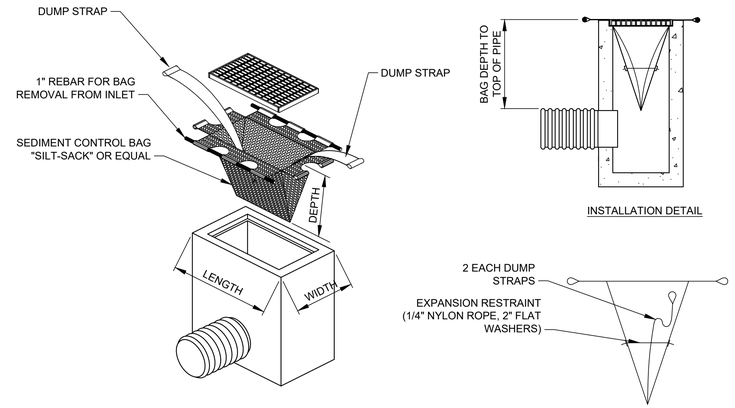

CB STYLE	LENGTH	WIDTH	DEPTH
TYPE 1 CB	2'-0"	1'-8"	VARIES
TYPCE 1 CCI	2'-5 1/2"	2'-0"	VARIES
USA G2	2'-8 1/2"	2'-3 1/2"	VARIES

NOTES:
1. THE DIMENSION CHART ABOVE IS FOR STANDARD CATCH BASINS AND INLETS ONLY. THE CONTRACTOR IS RESPONSIBLE FOR PROVIDING THE CORRECT SIZE DEVICE FOR EACH INLET.
2. FOR NON-STANDARD CATCH BASINS AND INLETS, THE CONTRACTOR SHALL MEASURE DIMENSIONS IN THE FIELD AND ORDER THE APPROPRIATE SIZE(S).
3. THE INLET SEDIMENT CONTROL DEVICE SHALL BE OF HIGH FLOW DESIGN (200 GAL/MIN/FT), AS PER THE MANUFACTURER'S SPECS.
4. THE SEDIMENT CONTROL DEVICE SHALL BE INSPECTED DAILY BY THE CONTRACTOR AND MAINTAINED A MINIMUM ONCE PER MONTH OR WITHIN THE 48 HOURS FOLLOWING A STORM EVENT. FILTER SHALL BE CLEANED IN A MANNER WHICH ENSURES THAT ALL SEDIMENT REMAINS ON SITE.
5. SUBSTITUTION OF A SHEET OF FILTER FABRIC PLACED OVER THE OPENING OF THE INLET IS NOT APPROVED.
6. RECESSED CURB INLET CATCH BASINS MUST BE BLOCKED WHEN USING FILTER FABRIC INLET SACKS, SIZE OF FILTER INLET SACK TO BE DETERMINED BY MANUFACTURER.
7. THE FILTER SHALL BE REPLACED OR CLEANED WHEN THE BAG BECOMES HALF FULL.
8. SEE INLET PROTECTION NOTES STD. DETAIL E3.

6 SILT SACK INLET PROTECTION

SCALE: N.T.S.

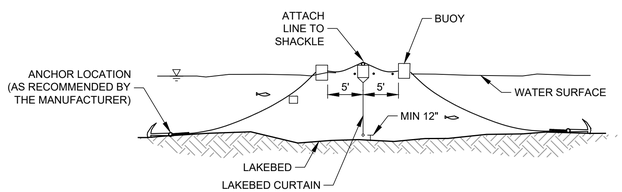

NOTES:
1. FLOATING TURBIDITY BARRIER CONSTRUCTION SHALL CONFORM WITH RELEVANT LOCAL AND STATE STANDARDS FOR SOIL EROSION AND SEDIMENT CONTROL.
2. FLOATING TURBIDITY BARRIER WILL BE INSPECTED AND MAINTAINED DAILY.

9 FLOATING TURBIDITY BARRIER

SCALE: N.T.S.

NOTES:
1. THE SOIL SURFACE SHOULD BE FINELY GRADED AND SMOOTH FOR THE BLANKET TO HAVE DIRECT CONTACT WITH THE SOIL AND TO PREVENT UNDERMINING. EROSION CONTROL BLANKETS PERFORM BEST ON LOAMY SOILS AND SHOULD NOT BE USED ON ROCKY SITES OR SHALLOW SOILS.
2. SEED SHOULD BE SOWN BEFORE INSTALLING THE EROSION CONTROL BLANKET.
3. ALWAYS UNROLL THE BLANKET DOWNHILL WITHOUT STRETCHING AND ANCHOR THE UPSLOPE EDGE IN A 12 INCH DEEP TRENCH THAT IS BACKFILLED AND TAMPED.
4. OVERLAP SHINGLE STYLE A MINIMUM OF 12 INCHES AT THE TOP OF EACH ROW AND 4 INCHES AT THE EDGES OF PARALLEL ROWS. ANCHOR ALONG THE OVERLAP WITH A MAXIMUM SPACING OF 3 FEET OR AS REQUIRED BY THE MANUFACTURER.

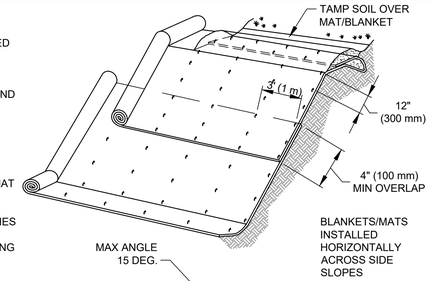

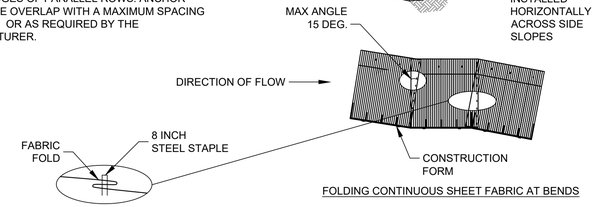

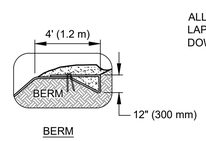

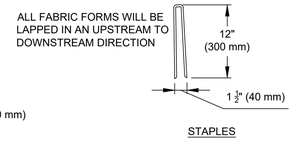

7 BIODEGRADABLE STABILIZATION MATTING

NO SCALE

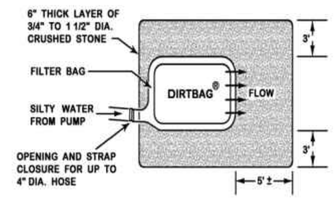

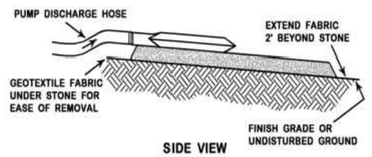

NOTES:
1. INSTALL THE FILTER BAG PRIOR TO INITIATING ANY ACTIVITIES WHICH WILL REQUIRE DEWATERING.
2. THE TYPE OF FABRIC SHOULD BE BASED ON THE SIZE OF SOIL PARTICLES TO BE TRAPPED (I.E. A WOVEN MATERIAL FOR COARSE PARTICLES AND A NONWOVEN MATERIAL FOR FINER PARTICLES).
3. A FILTER BAG SHOULD BE LOCATED IN AN AREA MOSTLY LEVEL (WITH LESS THAN 5% SLOPE). A PAD OF CRUSHED GRAVEL MAY BE PROVIDED.
4. AVOID DISCHARGING TO AN AREA THAT IS BARE OF VEGETATION OR NEWLY VEGETATED. ANY SIGN OF EROSION OR CHANNELIZATION FROM THE DISCHARGED WATER REQUIRES IMMEDIATELY CORRECTION.
5. FILTER BAGS HAVE A FINITE CAPACITY FOR SEDIMENT COLLECTION AND MAY BE PRONE TO PLUGGING. AVOID OVER-PRESSURIZING THE BAG OR IT MAY BURST.

10 GEOTEXTILE FILTER BAG

NO SCALE

FOR PERMIT

Attention:
0 1"
If this scale bar does not measure 1" then drawing is not original scale.

STATE OF MAINE
DANIEL J. BANNON
No. 13033
LICENSED PROFESSIONAL ENGINEER
April 22, 2024

Designed:	DJB
Drawn:	JAM
Checked:	BJB
Approved:	BMM
P.E. No:	13033
GEI Project	2203703

GEI Consultants
GEI CONSULTANTS, INC.
5 MILK STREET
PORTLAND, ME 04101
(207)797-8901

UNIVERSITY OF NEW ENGLAND
11 HILLS BEACH RD.
BIDDEFORD, MAINE

UNIVERSITY OF NEW ENGLAND MARINE SCIENCE CENTER PIER
11 HILLS BEACH ROAD
BIDDEFORD, YORK COUNTY, MAINE

NO	DATE	ISSUE/REVISION	APP
4	9/14/2023	DEP PERMIT SET	DJB
3	6/28/2023	75% DESIGN SUBMISSION	DJB
2	2/15/2023	30% DESIGN SUBMISSION	DJB
1	12/9/2022	15% DESIGN SUBMISSIONREV	DJB
0	11/11/2022	15% DESIGN SUBMISSION	DJB

SHEET NAME: **EROSION CONTROL DETAILS II**

SHEET NO.: **C-014**

MORICI, ANTHONY \\geiconsultants.com\data\Data_Storage\Working\UNIVERSITY OF NEW ENGLAND\2203703 UNE Marine Science Center Pier\00_CAD\Design\Sheets\2203703-C-DETAILS.dwg - 9/14/2023

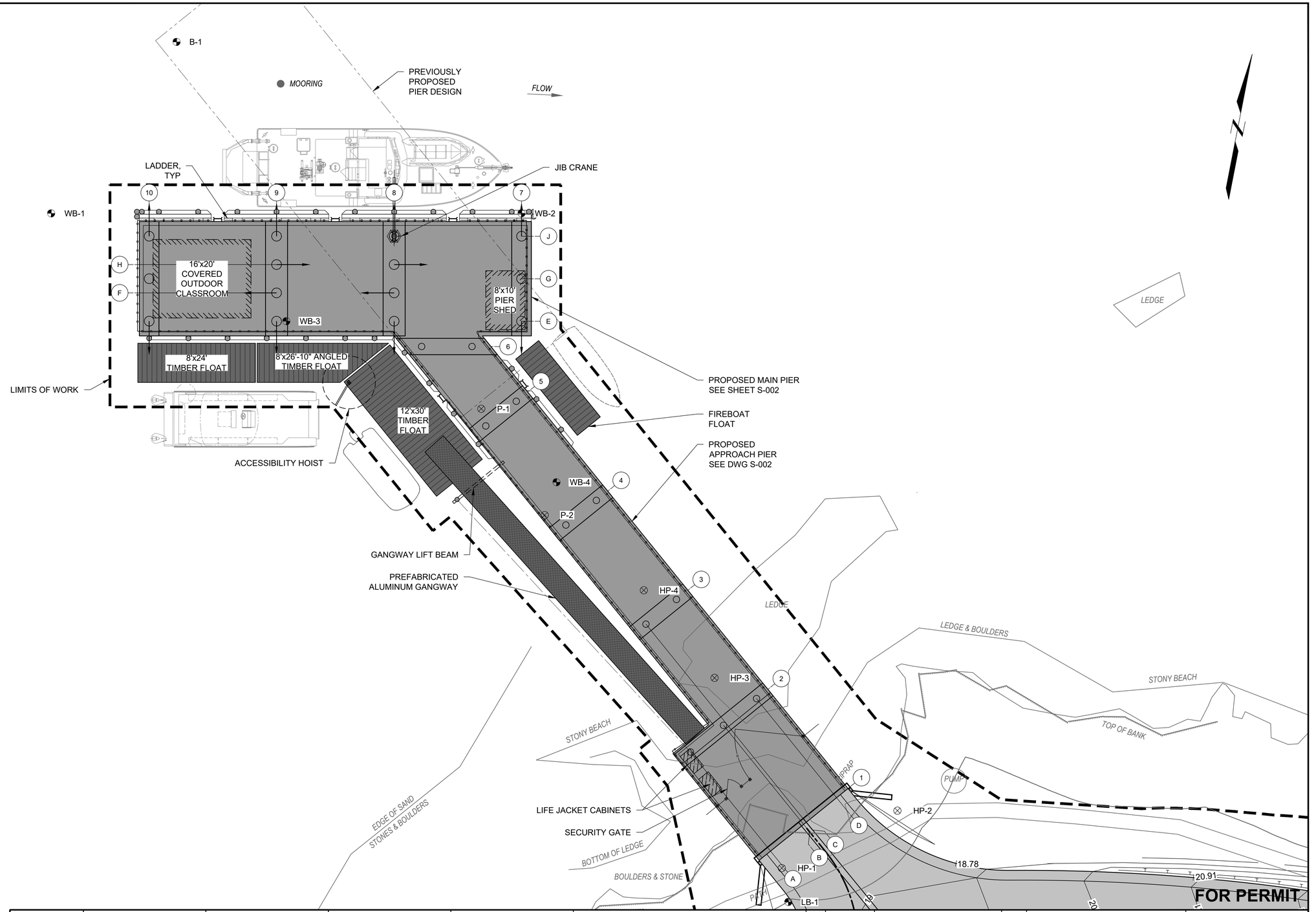

0 10 20
SCALE, FEET

ELEVATION	MLLW	NAVD88*
BFE	+19.0	+14.0
HAT	+11.6	+6.6
MHHW	+9.7	+4.7
MHW	+9.3	+4.3
MSL	+4.8	-0.2
MLW	+0.3	-4.7
MLLW	0.0	-5.0

*PROJECT DATUM

Attention:
0 1"
If this scale bar does not measure 1" then drawing is not original scale.

STATE OF MAINE
DANIEL J. BANNON
No. 13033
REGISTERED PROFESSIONAL ENGINEER
April 22, 2024

Designed:	DJB
Drawn:	JAM
Checked:	BJB
Approved:	BMM
P.E. No:	13033
GEI Project	2203703

GEI Consultants
GEI CONSULTANTS, INC.
5 MILK STREET
PORTLAND, ME 04101
(207)797-8901

UNE
UNIVERSITY OF NEW ENGLAND
11 HILLS BEACH RD.
BIDDEFORD, MAINE

UNIVERSITY OF NEW ENGLAND MARINE SCIENCE CENTER PIER

11 HILLS BEACH ROAD
BIDDEFORD, YORK COUNTY, MAINE

NO	DATE	ISSUE/REVISION	APP
4	9/14/2023	DEP PERMIT SET	DJB
3	6/28/2023	75% DESIGN SUBMISSION	DJB
2	2/15/2023	30% DESIGN SUBMISSION	DJB
1	12/9/2022	15% DESIGN SUBMISSIONREV	DJB
0	11/11/2022	15% DESIGN SUBMISSION	DJB

SHEET NAME
PIER LAYOUT PLAN

SHEET NO.
S-001

MORICI_ANTHONY \\geiconsultants.com\data\Data_Storage\Working\UNIVERSITY OF NEW ENGLAND\2203703 UNE Marine Science Center Pier\00_CAD\Design\Sheets\2203703-S-001.dwg - 9/14/2023

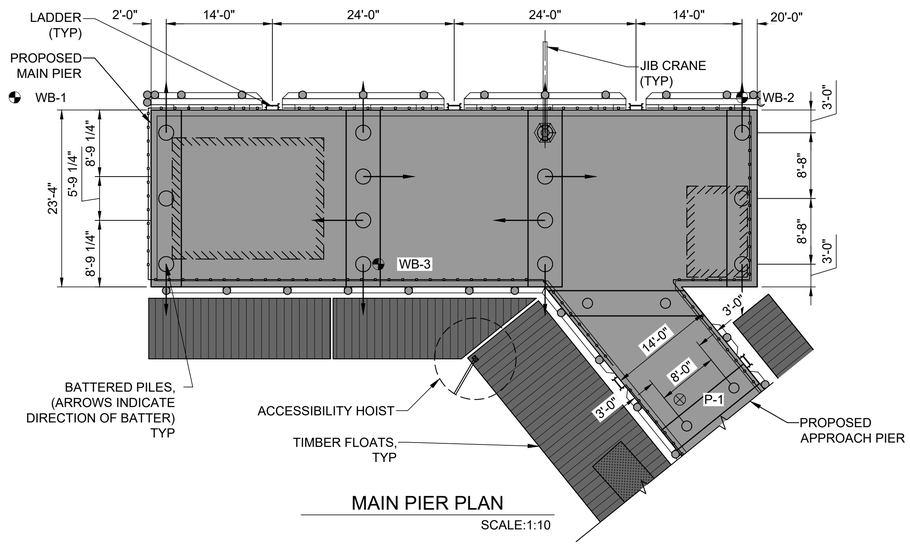

MAIN PIER PLAN

SCALE:1:10

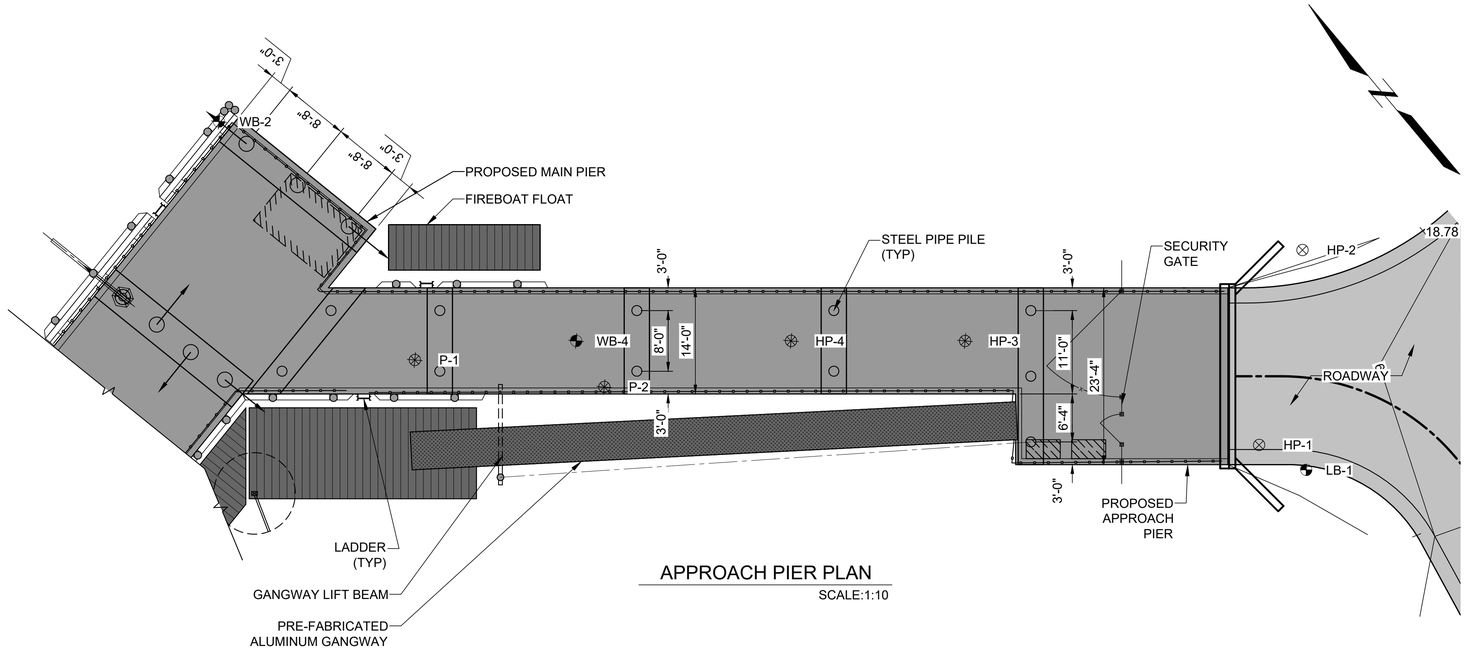

APPROACH PIER PLAN

SCALE:1:10

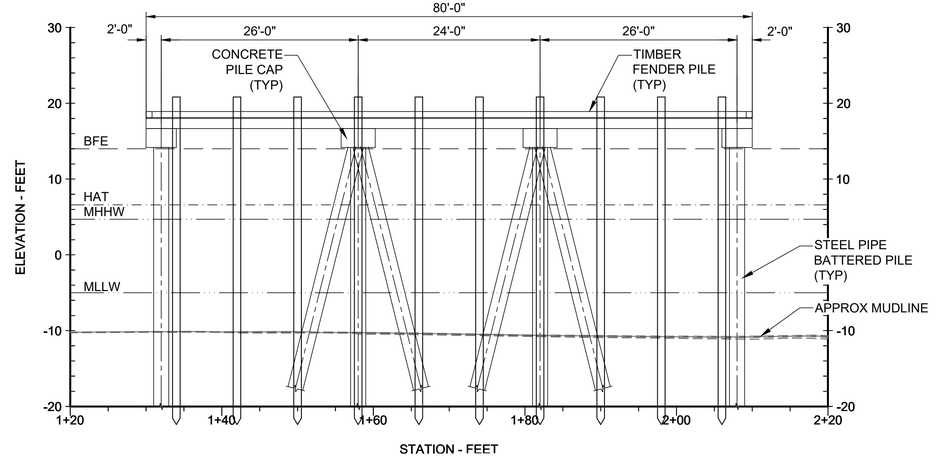

MAIN PIER ELEVATION

SCALE:1:10

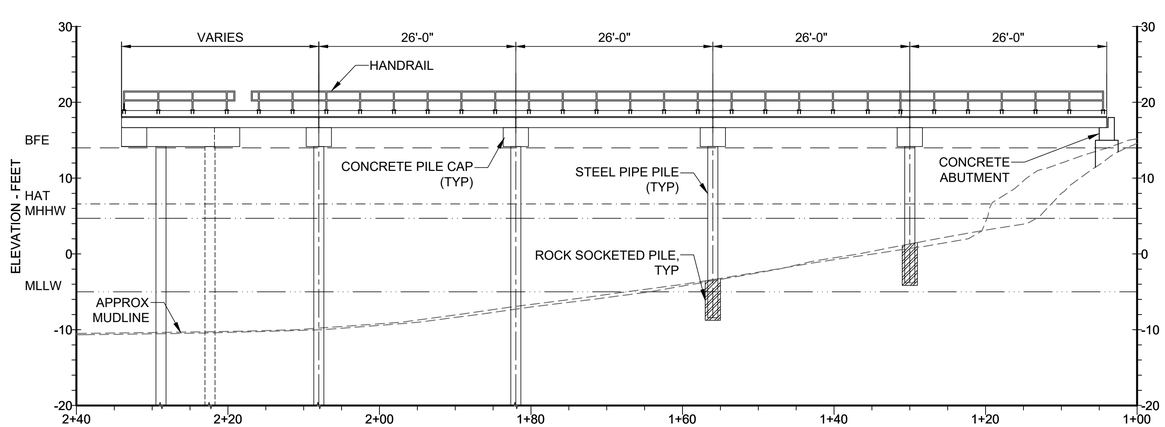

APPROACH PIER ELEVATION

SCALE:1:10

0 10 20

SCALE, FEET

ELEVATION	MLLW	NAVD88*
BFE	+19.0	+14.0
HAT	+11.6	+6.6
MHHW	+9.7	+4.7
MHW	+9.3	+4.3
MSL	+4.8	-0.2
MLW	+0.3	-4.7
MLLW	0.0	-5.0

*PROJECT DATUM

FOR PERMIT

Attention:

0 1"

If this scale bar does not measure 1" then drawing is not original scale.

STATE OF MAINE
DANIEL J. BANNON
No. 13033
REGISTERED PROFESSIONAL ENGINEER
April 22, 2024

Designed:	DJB
Drawn:	JAM
Checked:	BJB
Approved:	BMM
P.E. No:	13033
GEI Project	2203703

GEI Consultants

GEI CONSULTANTS, INC.
5 MILK STREET
PORTLAND, ME 04101
(207)797-8901

UNE
UNIVERSITY OF NEW ENGLAND

11 HILLS BEACH RD.
BIDDEFORD, MAINE

UNIVERSITY OF NEW ENGLAND MARINE SCIENCE CENTER PIER

11 HILLS BEACH ROAD
BIDDEFORD, YORK COUNTY, MAINE

NO	DATE	ISSUE/REVISION	APP
4	9/14/2023	DEP PERMIT SET	DJB
3	6/28/2023	75% DESIGN SUBMISSION	DJB
2	2/15/2023	30% DESIGN SUBMISSION	DJB
1	12/9/2022	15% DESIGN SUBMISSIONREV	DJB
0	11/11/2022	15% DESIGN SUBMISSION	DJB

SHEET NAME

PIER PLANS AND ELEVATIONS

SHEET NO.

S-002

MORICI, ANTHONY \\geiconsultants.com\data\Data_Storage\Working\UNIVERSITY OF NEW ENGLAND\2203703 UNE Marine Science Center Pier\00_CAD\Design\Sheets\2203703-S-002.dwg - 9/14/2023

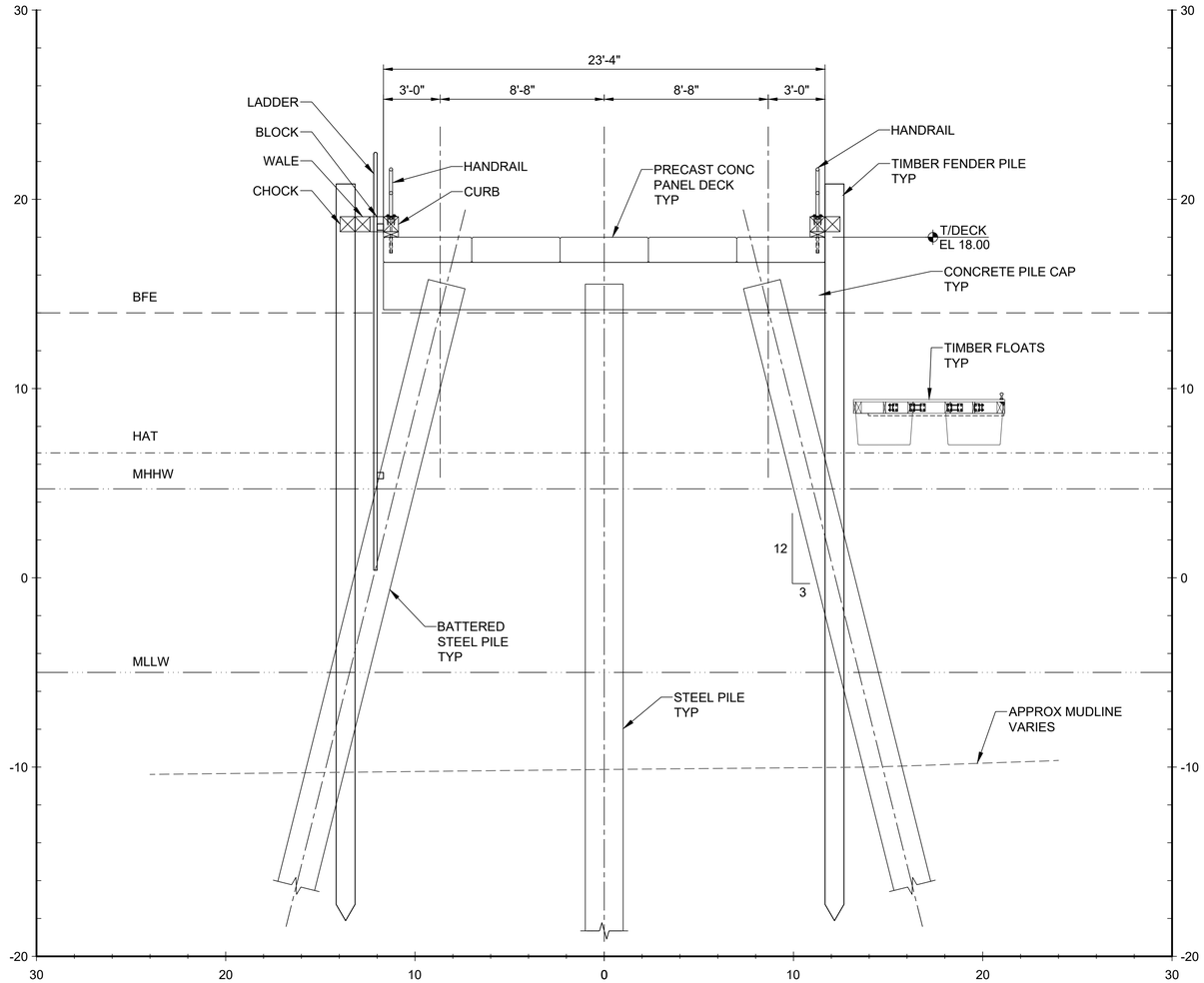

SECTION
MAIN PIER AT BENT 10 SCALE: 1"=4'

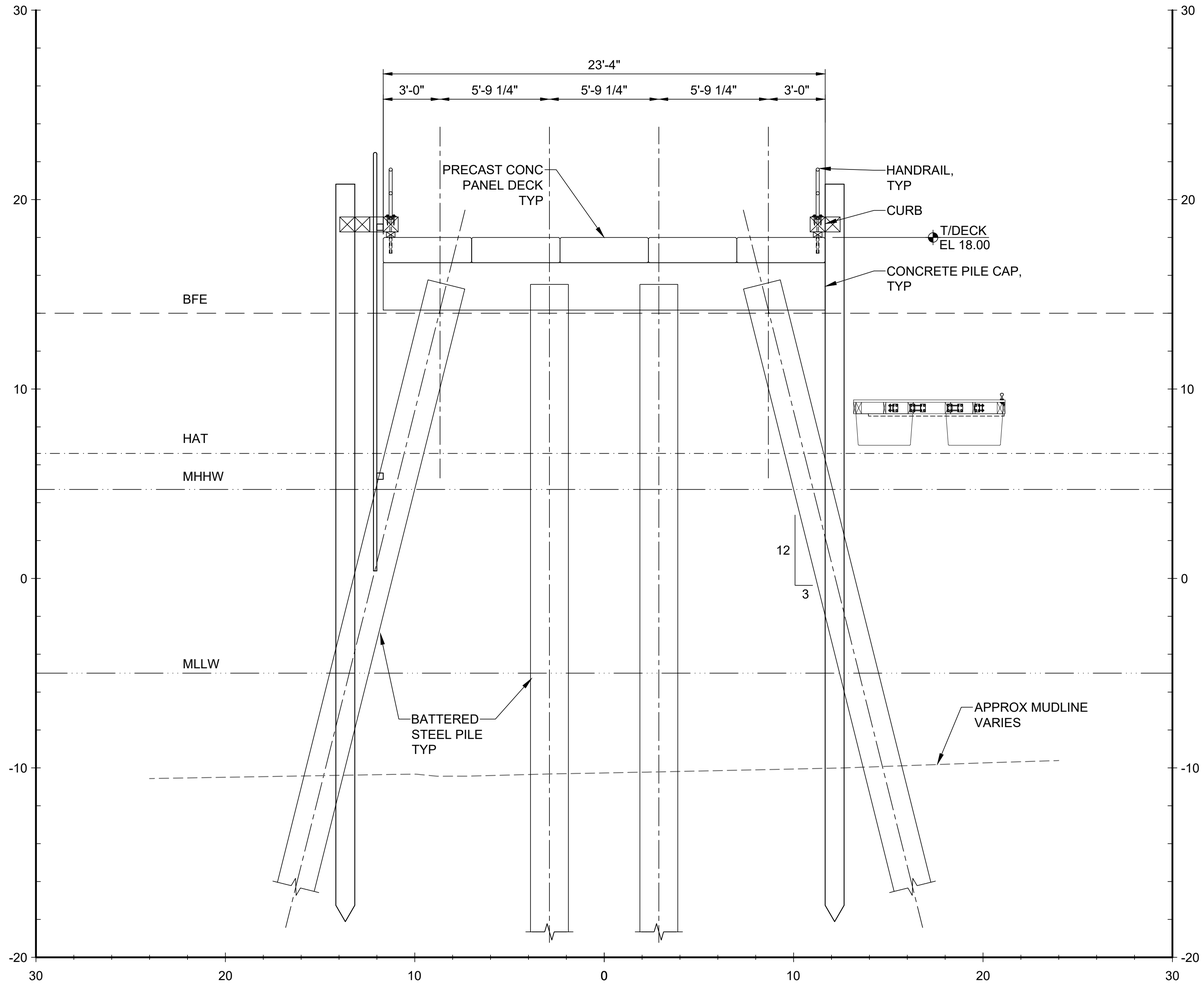

SECTION
MAIN PIER AT BENT 9 SCALE: 1"=4'

0 2 4 8
SCALE, FEET

ELEVATION	MLLW	NAVD88*
BFE	+19.0	+14.0
HAT	+11.6	+6.6
MHHW	+9.7	+4.7
MHW	+9.3	+4.3
MSL	+4.8	-0.2
MLW	+0.3	-4.7
MLLW	0.0	-5.0

*PROJECT DATUM

FOR PERMIT

Attention:
0 1"
If this scale bar does not measure 1" then drawing is not original scale.

STATE OF MAINE
DANIEL J. BANNON
No. 13033
LICENSED
PROFESSIONAL ENGINEER
April 22, 2024

Designed:	DJB
Drawn:	JAM
Checked:	BJB
Approved:	BMM
P.E. No:	13033
GEI Project	2203703

GEI Consultants
GEI CONSULTANTS, INC.
5 MILK STREET
PORTLAND, ME 04101
(207)797-8901

UNE
UNIVERSITY OF NEW ENGLAND
11 HILLS BEACH RD.
BIDDEFORD, MAINE

UNIVERSITY OF NEW ENGLAND MARINE SCIENCE CENTER PIER

11 HILLS BEACH ROAD
BIDDEFORD, YORK COUNTY, MAINE

NO	DATE	ISSUE/REVISION	APP
4	9/14/2023	DEP PERMIT SET	DJB
3	6/28/2023	75% DESIGN SUBMISSION	DJB
2	2/15/2023	30% DESIGN SUBMISSION	DJB
1	12/9/2022	15% DESIGN SUBMISSIONREV	DJB
0	11/11/2022	15% DESIGN SUBMISSION	DJB

SHEET NAME
TYPICAL PIER SECTIONS (1 OF 2)

SHEET NO.
S-003

MORICI, ANTHONY \\gisconsultants.com\data\Data_Storage\Working\UNIVERSITY OF NEW ENGLAND\2203703 UNE Marine Science Center Pier\00_CAD\Design\Sheets\2203703-S-003.dwg - 9/14/2023

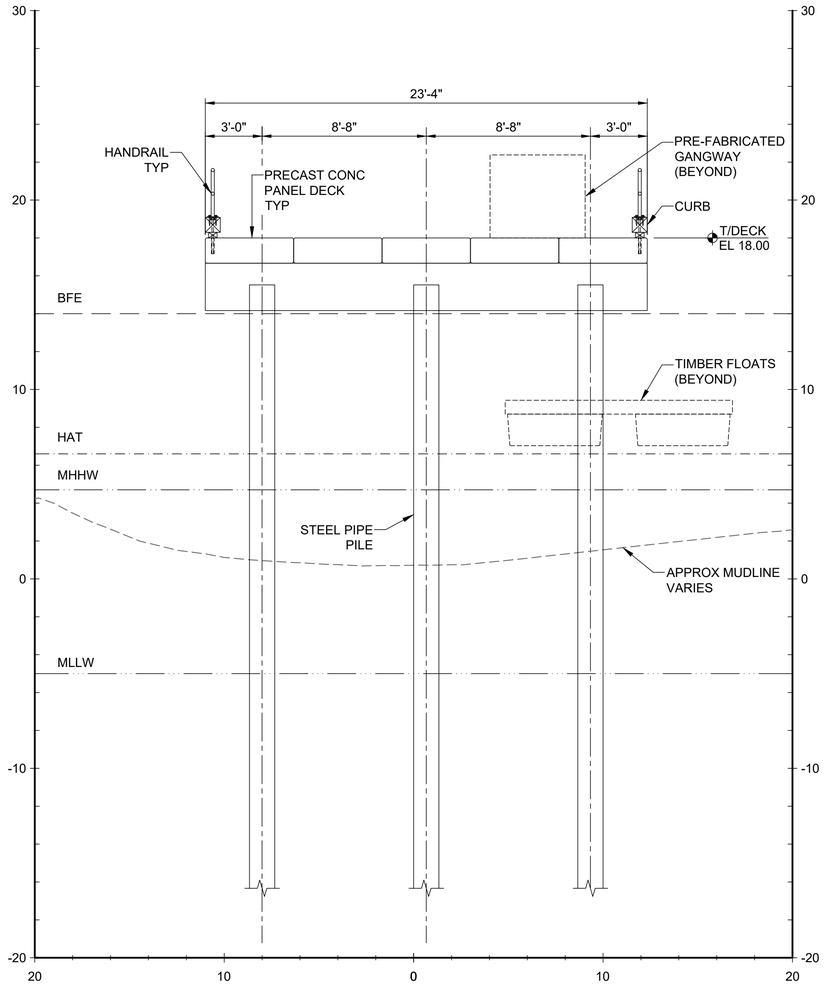

SECTION
28' WIDE APPROACH PIER AT BENT 2 SCALE: 1"=4'

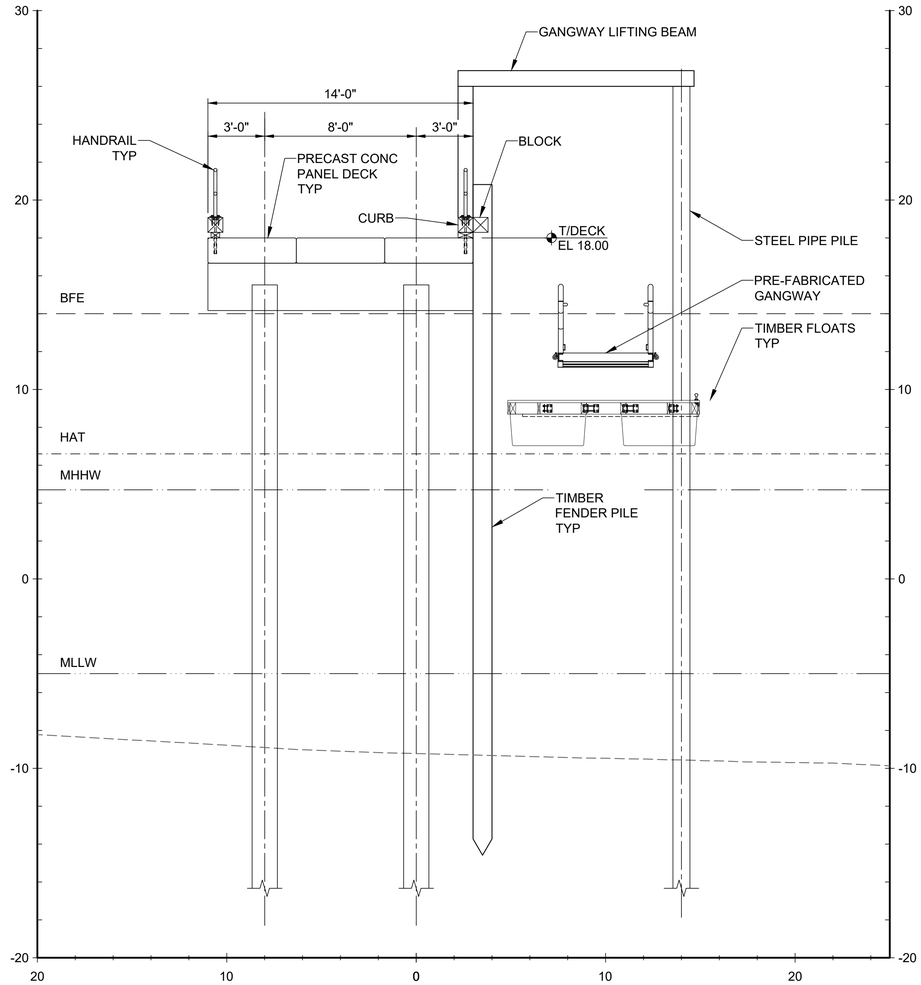

SECTION
14' WIDE APPROACH PIER AT GANGWAY HOIST SCALE: 1"=4'

0 2 4 8
SCALE, FEET

ELEVATION	MLLW	NAVD88*
BFE	+19.0	+14.0
HAT	+11.6	+6.6
MHHW	+9.7	+4.7
MHW	+9.3	+4.3
MSL	+4.8	-0.2
MLW	+0.3	-4.7
MLLW	0.0	-5.0

*PROJECT DATUM

FOR PERMIT

Attention:
0 1"
If this scale bar does not measure 1" then drawing is not original scale.

STATE OF MAINE
DANIEL J. BANNON
No. 13033
LICENSED PROFESSIONAL ENGINEER
April 22, 2024

Designed:	DJB
Drawn:	JAM
Checked:	BJB
Approved:	BMM
P.E. No:	13033
GEI Project	2203703

GEI Consultants
GEI CONSULTANTS, INC.
5 MILK STREET
PORTLAND, ME 04101
(207)797-8901

UNIVERSITY OF NEW ENGLAND
11 HILLS BEACH RD.
BIDDEFORD, MAINE

UNIVERSITY OF NEW ENGLAND MARINE SCIENCE CENTER PIER
11 HILLS BEACH ROAD
BIDDEFORD, YORK COUNTY, MAINE

NO	DATE	ISSUE/REVISION	APP
4	9/14/2023	DEP PERMIT SET	DJB
3	6/28/2023	75% DESIGN SUBMISSION	DJB
2	2/15/2023	30% DESIGN SUBMISSION	DJB
1	12/9/2022	15% DESIGN SUBMISSIONREV	DJB
0	11/11/2022	15% DESIGN SUBMISSION	DJB

SHEET NAME
TYPICAL PIER SECTIONS (2 OF 2)

SHEET NO.
S-004

MORICI, ANTHONY \\geiconsultants.com\data\Data_Storage\Working\UNIVERSITY OF NEW ENGLAND\2203703 UNE Marine Science Center Pier\00_CAD\Design\Sheets\2203703-S-004.dwg - 9/14/2023

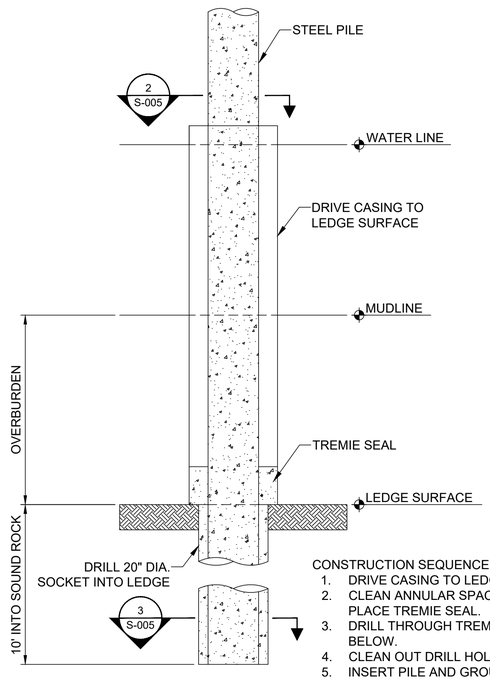

CONSTRUCTION SEQUENCE

1. DRIVE CASING TO LEDGE SURFACE.
2. CLEAN ANNULAR SPACE TO LEDGE SURFACE, PLACE TREMIE SEAL.
3. DRILL THROUGH TREMIE INTO SOUND ROCK BELOW.
4. CLEAN OUT DRILL HOLE.
5. INSERT PILE AND GROUT TO SURFACE.
6. REMOVE CASING.
7. FILL STEEL PIPE PILE TO TOP WITH CONCRETE.

1 DETAIL
PILE SOCKET SCALE: 1" = 2'

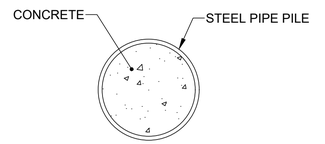

2 SECTION
CONCRETE FILLED STEEL PIPE PILE SCALE: 1" = 1'

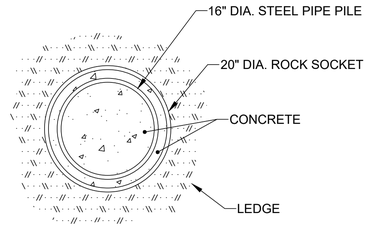

3 SECTION
ROCK SOCKET SCALE: 1" = 1'

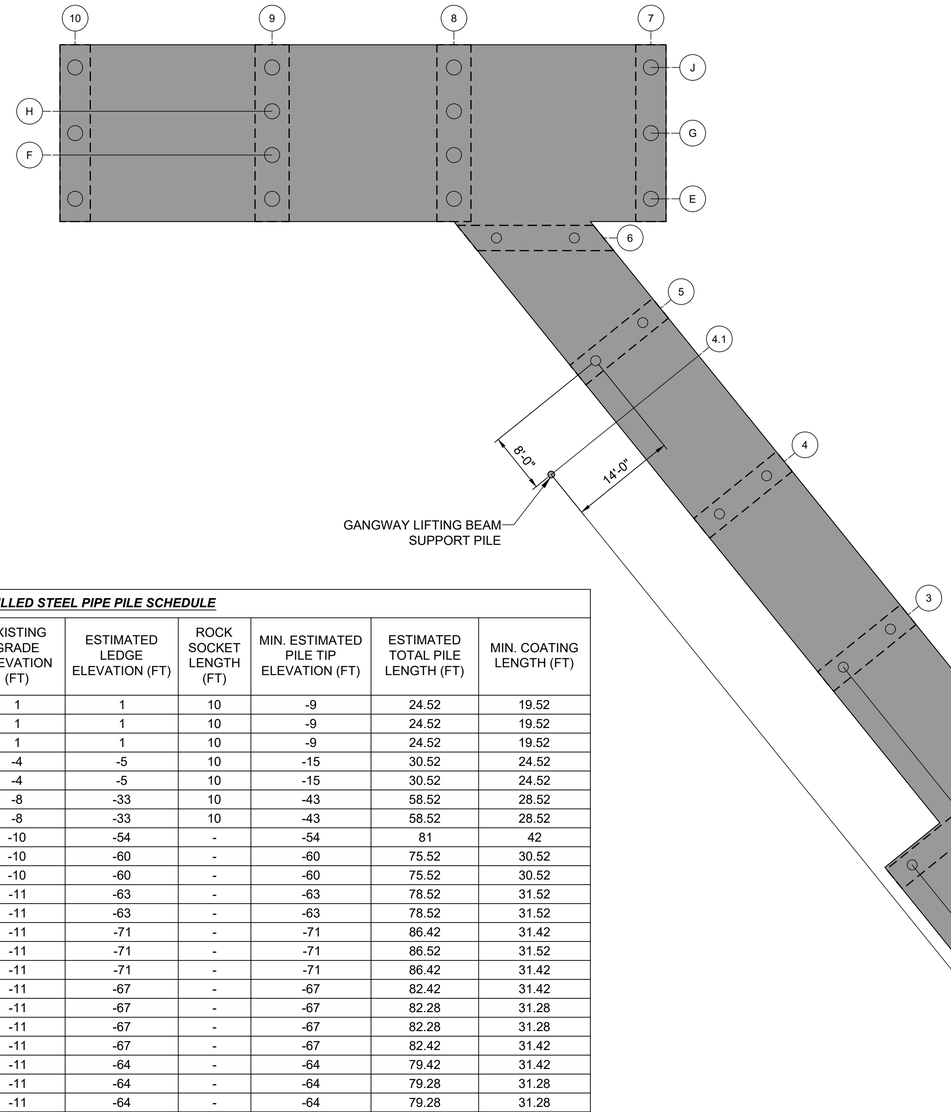

DETAIL
MAIN PIER SCALE: 1" = 10"

CONCRETE FILLED STEEL PIPE PILE SCHEDULE

PILE DESIGNATION	PILE SIZE (INCHES)	BATTER	CUTOFF ELEVATION (FT)	EXISTING GRADE ELEVATION (FT)	ESTIMATED LEDGE ELEVATION (FT)	ROCK SOCKET LENGTH (FT)	MIN. ESTIMATED PILE TIP ELEVATION (FT)	ESTIMATED TOTAL PILE LENGTH (FT)	MIN. COATING LENGTH (FT)
2A	16x5/8	VERTICAL	15.52	1	1	10	-9	24.52	19.52
2B	16x5/8	VERTICAL	15.52	1	1	10	-9	24.52	19.52
2D	16x5/8	VERTICAL	15.52	1	1	10	-9	24.52	19.52
3C	16x5/8	VERTICAL	15.52	-4	-5	10	-15	30.52	24.52
3D	16x5/8	VERTICAL	15.52	-4	-5	10	-15	30.52	24.52
4C	16x5/8	VERTICAL	15.52	-8	-33	10	-43	58.52	28.52
4D	16x5/8	VERTICAL	15.52	-8	-33	10	-43	58.52	28.52
4.1-A.1	10.75x5/8	VERTICAL	27	-10	-54	-	-54	81	42
5C	16x5/8	VERTICAL	15.52	-10	-60	-	-60	75.52	30.52
5D	16x5/8	VERTICAL	15.52	-10	-60	-	-60	75.52	30.52
6C	16x5/8	VERTICAL	15.52	-11	-63	-	-63	78.52	31.52
6D	16x5/8	VERTICAL	15.52	-11	-63	-	-63	78.52	31.52
7E	24x5/8	3:12	15.42	-11	-71	-	-71	86.42	31.42
7G	24x5/8	VERTICAL	15.52	-11	-71	-	-71	86.52	31.52
7J	24x5/8	3:12	15.42	-11	-71	-	-71	86.42	31.42
8E	24x5/8	3:12	15.42	-11	-67	-	-67	82.42	31.42
8F	24x5/8	3:12	15.28	-11	-67	-	-67	82.28	31.28
8H	24x5/8	3:12	15.28	-11	-67	-	-67	82.28	31.28
8J	24x5/8	3:12	15.42	-11	-67	-	-67	82.42	31.42
9E	24x5/8	3:12	15.42	-11	-64	-	-64	79.42	31.42
9F	24x5/8	3:12	15.28	-11	-64	-	-64	79.28	31.28
9H	24x5/8	3:12	15.28	-11	-64	-	-64	79.28	31.28
9J	24x5/8	3:12	15.42	-11	-64	-	-64	79.42	31.42
10E	24x5/8	3:12	15.42	-11	-66	-	-66	81.42	31.42
10G	24x5/8	VERTICAL	15.52	-11	-66	-	-66	81.52	31.52
10J	24x5/8	3:12	15.42	-11	-66	-	-66	81.42	31.42
							TOTAL	1821.5	

SCHEDULE NOTES

1. ALL ELEVATIONS REFERENCED IN TABLE ARE IN NAVD88 DATUM.

0 10 20
SCALE, FEET

0 1 2 4
SCALE, FEET

ELEVATION	MLLW	NAVD88*
BFE	+19.0	+14.0
HAT	+11.6	+6.6
MHHW	+9.7	+4.7
MHW	+9.3	+4.3
MSL	+4.8	-0.2
MLW	+0.3	-4.7
MLLW	0.0	-5.0

*PROJECT DATUM

FOR PERMIT

Attention:
0 1"
If this scale bar does not measure 1" then drawing is not original scale.

STATE OF MAINE
DANIEL J. BANNON
No. 13033
LICENSED PROFESSIONAL ENGINEER
April 22, 2024

Designed:	DJB
Drawn:	JAM
Checked:	BJB
Approved:	BMM
P.E. No:	13033
GEI Project	2203703

GEI Consultants
GEI CONSULTANTS, INC.
5 MILK STREET
PORTLAND, ME 04101
(207)797-8901

UNIVERSITY OF NEW ENGLAND
11 HILLS BEACH RD.
BIDDEFORD, MAINE

UNIVERSITY OF NEW ENGLAND MARINE SCIENCE CENTER PIER
11 HILLS BEACH ROAD
BIDDEFORD, YORK COUNTY, MAINE

NO	DATE	ISSUE/REVISION	APP
4	9/14/2023	DEP PERMIT SET	DJB
3	6/28/2023	75% DESIGN SUBMISSION	DJB
2	2/15/2023	30% DESIGN SUBMISSION	DJB
1	12/9/2022	15% DESIGN SUBMISSIONREV	DJB
0	11/11/2022	15% DESIGN SUBMISSION	DJB

SHEET NAME: **PILE PLAN**

SHEET NO.: **S-005**

MORICI, ANTHONY \\geiconsultants.com\data\Data_Storage\Working\UNIVERSITY OF NEW ENGLAND\2203703 UNE Marine Science Center Pier\00_CAD\Design\Sheets\2203703-S-005.dwg - 9/14/2023

PRECAST DECK PANEL SCHEDULE					
PANEL ID	A	B	C	D	QTY.
A	4'-8"	25'-2"	-	-	5
B	4'-8"	24'-3"	-	-	9
C	4'-8"	-	13'-3"	17'-0"	1
D	4'-8"	-	17'-0"	20'-9 1/2"	1
E	4'-8"	-	20'-9 1/2"	24'-7"	1
F	4'-8"	26'-0"	-	-	10
G	4'-8"	22'-0"	-	-	5

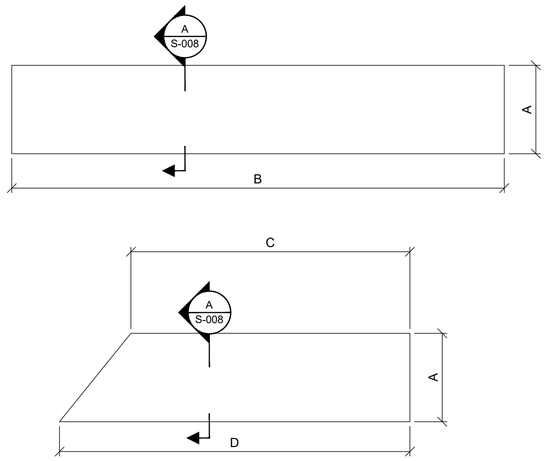

1 DETAIL-PLAN
PRECAST DECK PANEL SCALE: 1"=4'

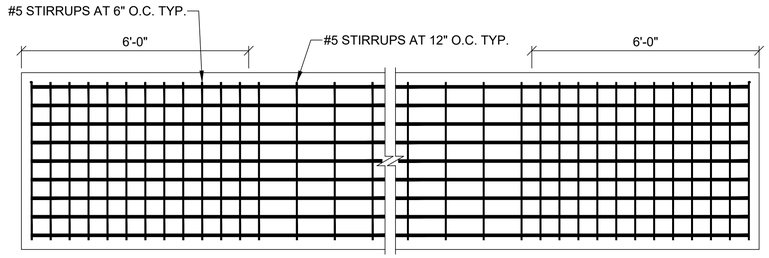

3 DETAIL-PLAN PLANKS A, B, F, & G
PRECAST DECK PANEL
STIRRUP SPACING SCALE: 1"=2'

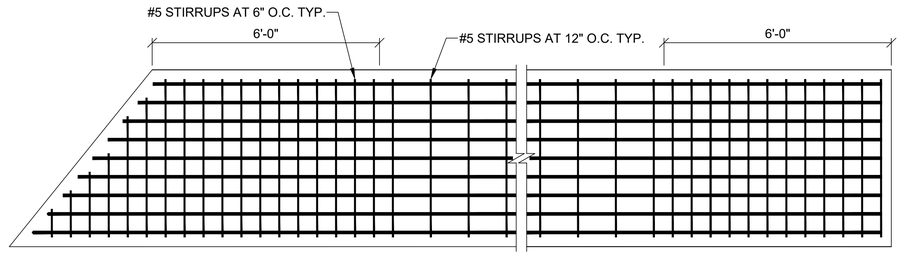

4 DETAIL-PLAN PLANKS C, D, & E
PRECAST DECK PANEL
STIRRUP SPACING SCALE: 1"=2'

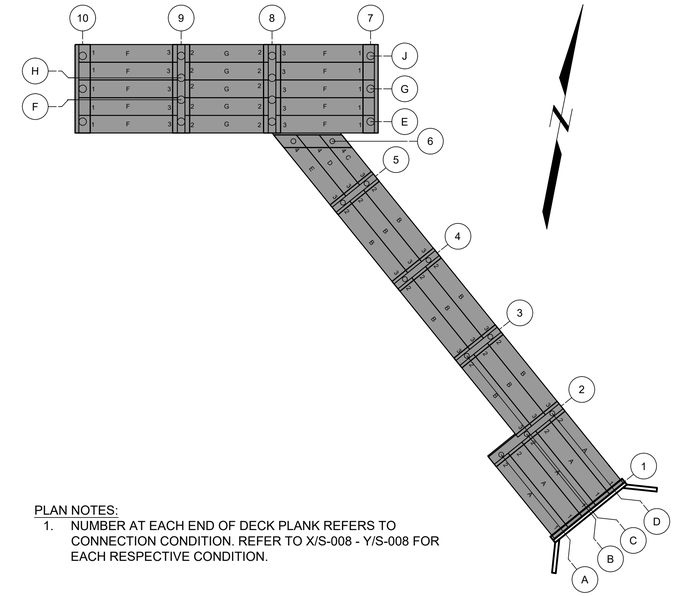

PLAN NOTES:
1. NUMBER AT EACH END OF DECK PLANK REFERS TO CONNECTION CONDITION. REFER TO X/S-008 - Y/S-008 FOR EACH RESPECTIVE CONDITION.

9 DETAIL
PIER DECK PANELS N.T.S.

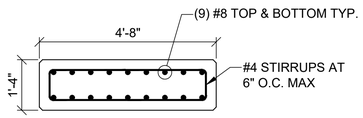

A SECTION
PRECAST DECK PANEL SCALE: 1"=2'

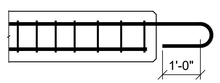

B SECTION
PRECAST DECK PANEL
CONNECTION END 2 & 3 SCALE: 1"=2'

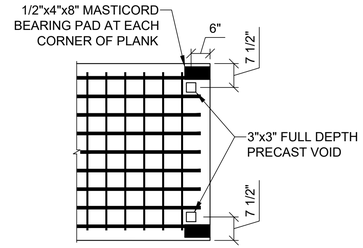

5 DETAIL - PLAN
DECK PANEL
CONNECTION 1 SCALE: 1"=2'

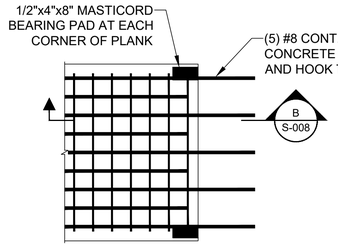

6 DETAIL - PLAN
DECK PANEL
CONNECTION 2 SCALE: 1"=2'

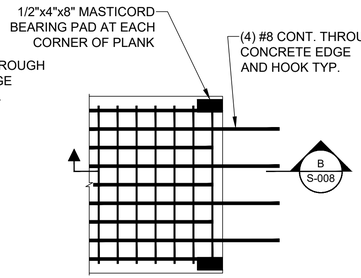

7 DETAIL - PLAN
DECK PANEL
CONNECTION 3 SCALE: 1"=2'

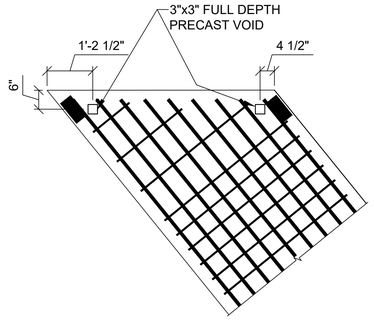

8 DETAIL - PLAN
DECK PANEL
CONNECTION 1 SCALE: 1"=2'

0 10 20
SCALE, FEET

0 1 2 4
SCALE, FEET

ELEVATION	MLLW	NAVD88*
BFE	+19.0	+14.0
HAT	+11.6	+6.6
MHHW	+9.7	+4.7
MHW	+9.3	+4.3
MSL	+4.8	-0.2
MLW	+0.3	-4.7
MLLW	0.0	-5.0

*PROJECT DATUM

FOR PERMIT

Attention:
0 1"
If this scale bar does not measure 1" then drawing is not original scale.

STATE OF MAINE
DANIEL J. BANNON
No. 13033
LICENSED
PROFESSIONAL ENGINEER
April 22, 2024

Designed:	DJB
Drawn:	JAM
Checked:	BJB
Approved:	BMM
P.E. No:	13033
GEI Project	2203703

GEI Consultants
GEI CONSULTANTS, INC.
5 MILK STREET
PORTLAND, ME 04101
(207)797-8901

UNE
UNIVERSITY OF NEW ENGLAND
11 HILLS BEACH RD.
BIDDEFORD, MAINE

UNIVERSITY OF NEW ENGLAND
MARINE SCIENCE CENTER PIER
11 HILLS BEACH ROAD
BIDDEFORD, YORK COUNTY, MAINE

NO	DATE	ISSUE/REVISION	APP
4	9/14/2023	DEP PERMIT SET	DJB
3	6/28/2023	75% DESIGN SUBMISSION	DJB
2	2/15/2023	30% DESIGN SUBMISSION	DJB
1	12/9/2022	15% DESIGN SUBMISSIONREV	DJB
0	11/11/2022	15% DESIGN SUBMISSION	DJB

SHEET NAME
PRECAST DECK PANEL PLAN

SHEET NO.
S-008

MORICI, ANTHONY \\bos1v-fs02\Data_Storage\Working\UNIVERSITY OF NEW ENGLAND\2203703 UNE Marine Science Center Pier\00_CAD\Design\Sheets\2203703-S-008.dwg - 9/14/2023

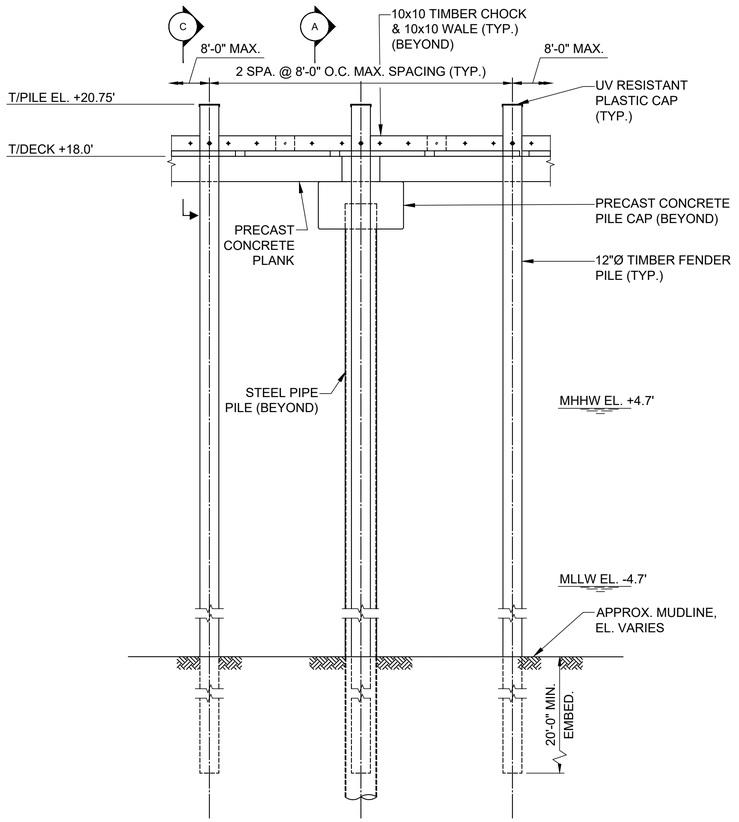

TIMBER FENDER DETAIL

SCALE: 1/4" = 1'-0"

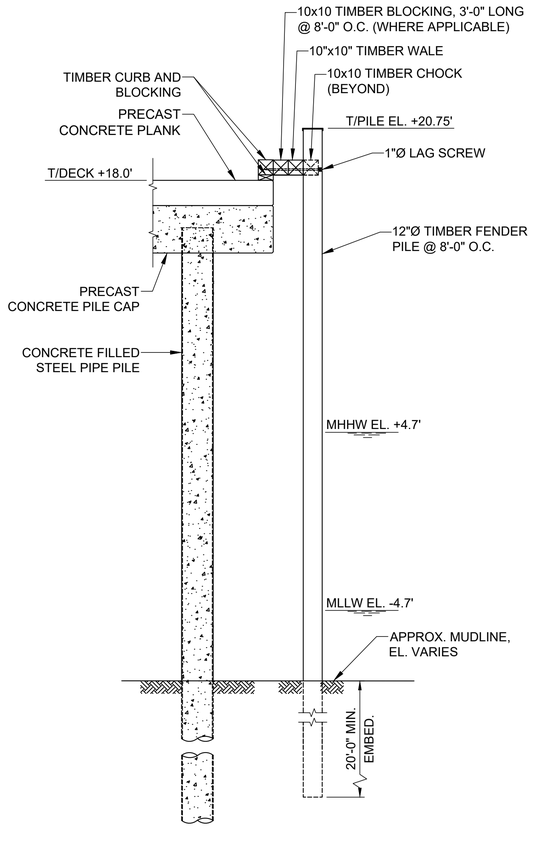

A TIMBER FENDER SECTION

SCALE: 1/4" = 1'-0"

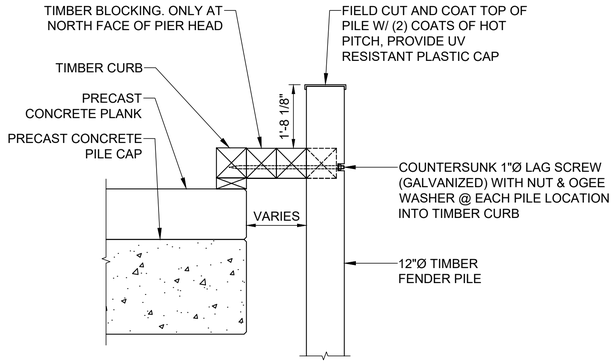

C FENDER PILE CONNECTION

SCALE: 1/2" = 1'-0"

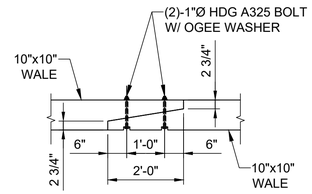

D WALE SPLICE DETAIL

SCALE: 1/2" = 1'-0"

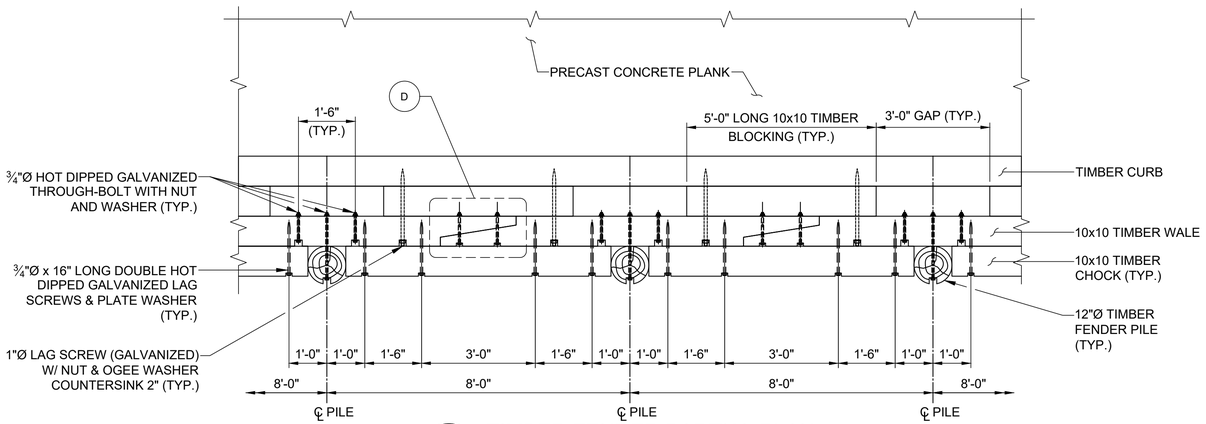

B TIMBER FENDER PARTIAL PLAN

SCALE: 1/2" = 1'-0"

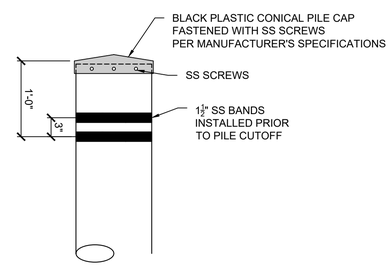

E PILE BANDING DETAIL

SCALE: 1" = 1'-0"

ELEVATION	MLLW	NAVD88*
BFE	+19.0	+14.0
HAT	+11.6	+6.6
MHHW	+9.7	+4.7
MHW	+9.3	+4.3
MSL	+4.8	-0.2
MLW	+0.3	-4.7
MLLW	0.0	-5.0

*PROJECT DATUM

FOR PERMIT

Attention:

0 1"

If this scale bar does not measure 1" then drawing is not original scale.

STATE OF MAINE — DANIEL J. BANNON No. 13033 — LICENSED PROFESSIONAL ENGINEER

April 22, 2024

Designed:	DJB
Drawn:	JAM
Checked:	BJB
Approved:	BMM
P.E. No:	13033
GEI Project	2203703

GEI Consultants

GEI CONSULTANTS, INC.
5 MILK STREET
PORTLAND, ME 04101
(207)797-8901

UNIVERSITY OF NEW ENGLAND

11 HILLS BEACH RD.
BIDDEFORD, MAINE

UNIVERSITY OF NEW ENGLAND MARINE SCIENCE CENTER PIER

11 HILLS BEACH ROAD
BIDDEFORD, YORK COUNTY, MAINE

NO	DATE	ISSUE/REVISION	APP
4	9/14/2023	DEP PERMIT SET	DJB
3	6/28/2023	75% DESIGN SUBMISSION	DJB
2	2/15/2023	30% DESIGN SUBMISSION	DJB
1	12/9/2022	15% DESIGN SUBMISSIONREV	DJB
0	11/11/2022	15% DESIGN SUBMISSION	DJB

SHEET NAME

MISCELLANEOUS DETAILS (1 OF 5)

SHEET NO.

S-009

MORICI, ANTHONY \\bos1v-fs02\Data_Storage\Working\UNIVERSITY OF NEW ENGLAND\2203703 UNE Marine Science Center Pier\00_CAD\Design\Sheets\2203703-S-009.dwg - 9/14/2023

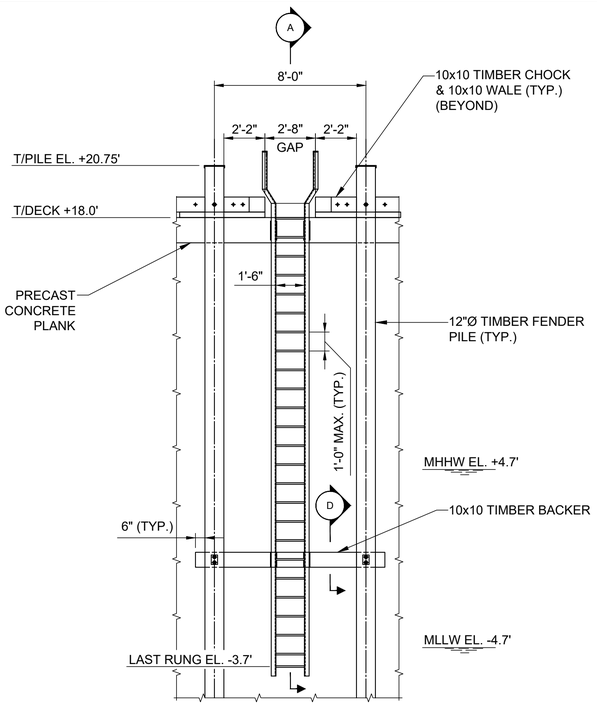

LADDER DETAIL

SCALE: 1/4" = 1'-0"

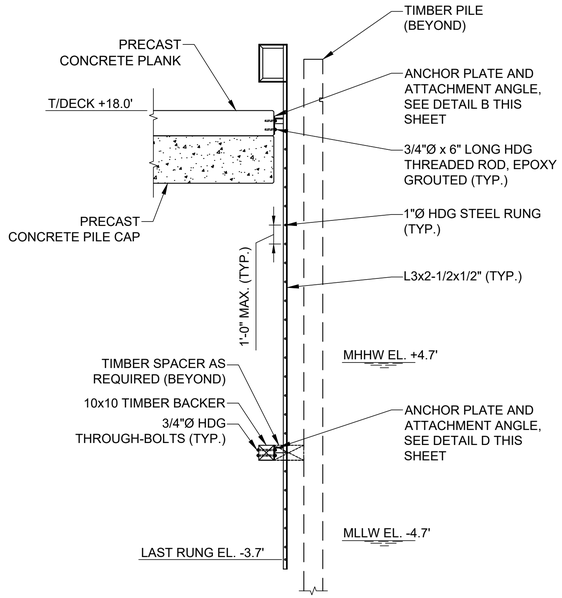

A LADDER SECTION

SCALE: 1/4" = 1'-0"

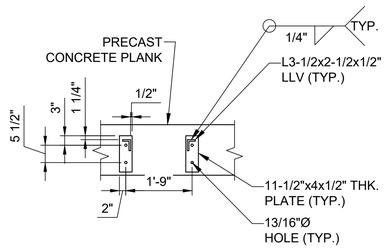

B LADDER CONNECTION (TOP)

SCALE: 1/2" = 1'-0"

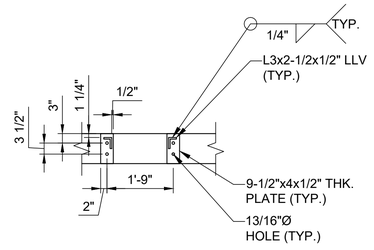

C LADDER CONNECTION (BOTTOM)

SCALE: 1/2" = 1'-0"

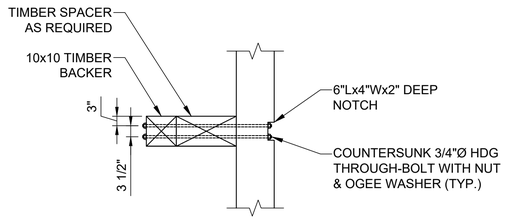

D TIMBER BACKER CONNECTION

SCALE: 1/2" = 1'-0"

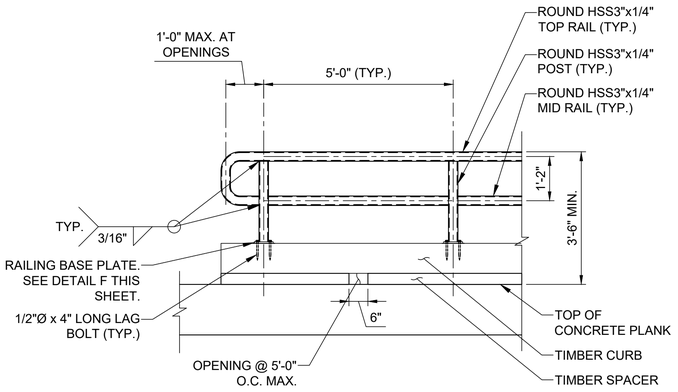

E RAILING SECTION

SCALE: 1/2" = 1'-0"

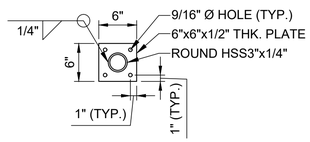

F RAILING BASEPLATE DETAIL

SCALE: 1" = 1'-0"

ELEVATION	MLLW	NAVD88*
BFE	+19.0	+14.0
HAT	+11.6	+6.6
MHHW	+9.7	+4.7
MHW	+9.3	+4.3
MSL	+4.8	-0.2
MLW	+0.3	-4.7
MLLW	0.0	-5.0

*PROJECT DATUM

FOR PERMIT

Attention:

0 1"

If this scale bar does not measure 1" then drawing is not original scale.

STATE OF MAINE
DANIEL J. BANNON
No. 13033
LICENSED
PROFESSIONAL ENGINEER
April 22, 2024

Designed:	DJB
Drawn:	JAM
Checked:	BJB
Approved:	BMM
P.E. No:	13033
GEI Project	2203703

GEI Consultants
GEI CONSULTANTS, INC.
5 MILK STREET
PORTLAND, ME 04101
(207)797-8901

UNE
UNIVERSITY OF NEW ENGLAND
11 HILLS BEACH RD.
BIDDEFORD, MAINE

UNIVERSITY OF NEW ENGLAND MARINE SCIENCE CENTER PIER
11 HILLS BEACH ROAD
BIDDEFORD, YORK COUNTY, MAINE

NO	DATE	ISSUE/REVISION	APP
4	9/14/2023	DEP PERMIT SET	DJB
3	6/28/2023	75% DESIGN SUBMISSION	DJB
2	2/15/2023	30% DESIGN SUBMISSION	DJB
1	12/9/2022	15% DESIGN SUBMISSIONREV	DJB
0	11/11/2022	15% DESIGN SUBMISSION	DJB

SHEET NAME: **MISCELLANEOUS DETAILS (2 OF 5)**

SHEET NO.: **S-010**

MCRICI, ANTHONY \\bos1vlk002\Data_Storage\Working\UNIVERSITY OF NEW ENGLAND\2203703 UNE Marine Science Center Pier\00_CAD\Design\Sheets\2203703-S-010.dwg - 9/14/2023

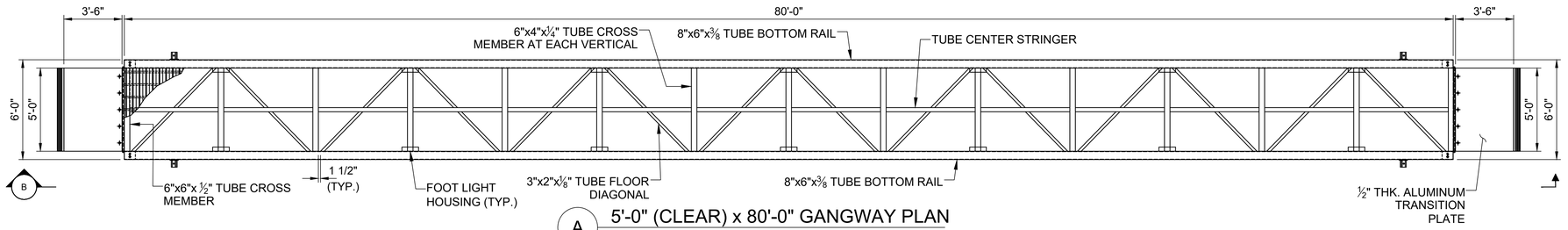

A 5'-0" (CLEAR) x 80'-0" GANGWAY PLAN

SCALE: 1/4" = 1'-0"

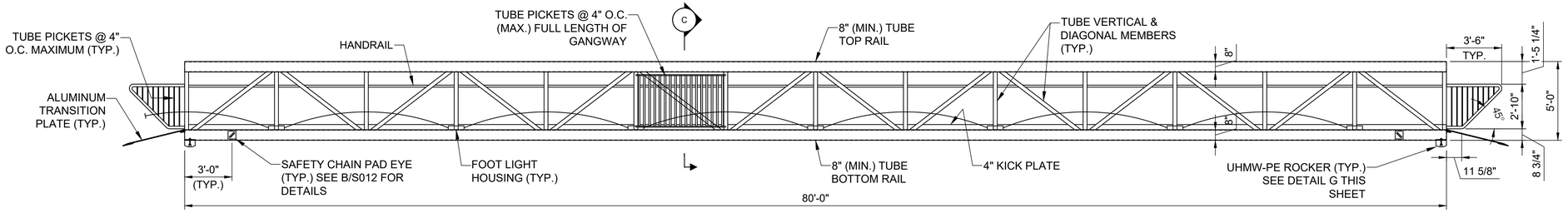

B GANGWAY ELEVATION

SCALE: 1/4" = 1'-0"

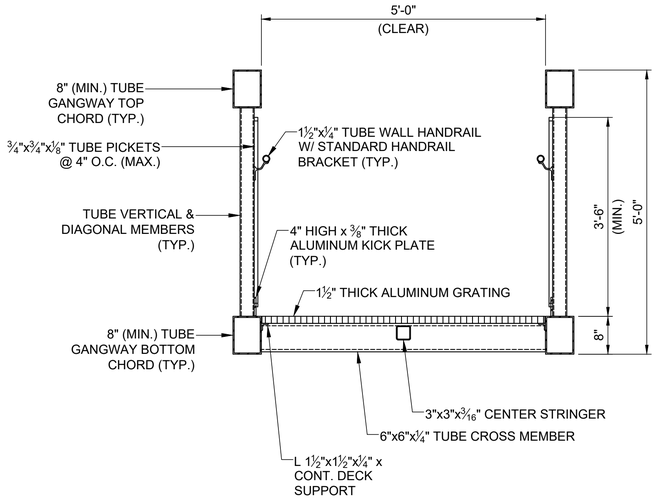

C TYPICAL GANGWAY SECTION

SCALE: 3/4" = 1'-0"

NOTE(S):
1. CONTRACTOR AND GANGWAY MANUFACTURER SHALL DETERMINE FINAL GANGWAY MEMBER SIZES AND SUBMIT TO ENGINEER FOR REVIEW AND APPROVAL.
2. ALUMINUM GRATING SHALL MEET ADA REQUIREMENTS.

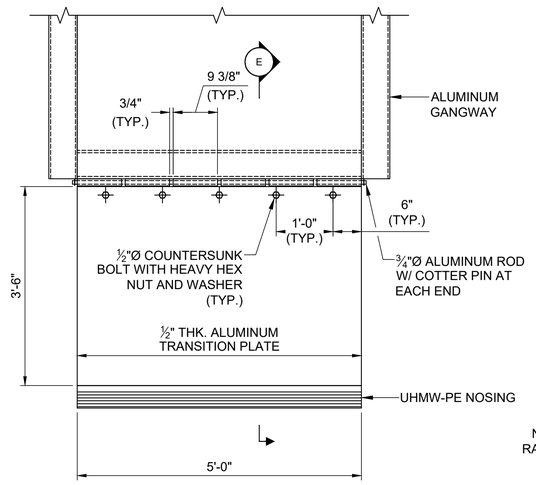

D TRANSITION PLATE DETAIL

SCALE: 3/4" = 1'-0"

NOTES:
1. CONTRACTOR SHALL DETERMINE FINAL GANGWAY MEMBER SIZES. MEMBERS ONLY SHOWN SCHEMATICALLY FOR REFERENCE.
2. CONTRACTOR SHALL SUBMIT FINAL GANGWAY SHOP DRAWINGS AND CALCULATION PACKAGE SIGNED AND SEALED BY A PROFESSIONAL ENGINEER LICENSED IN THE STATE OF MAINE.
3. ALL GANGWAY TUBE MEMBERS SHALL BE 6061-T6 ALUMINUM.
4. ALL GANGWAY TUBE MEMBERS SHALL BE CAPPED AND SEALED W/ ALUMINUM PLATES AT EXPOSED ENDS.

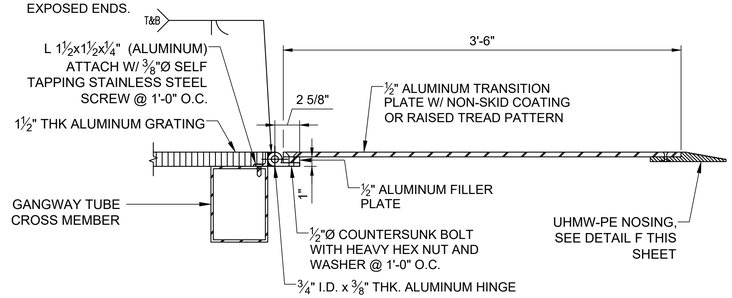

E GANGWAY TRANSITION PLATE SECTION

SCALE: 1-1/2" = 1'-0"

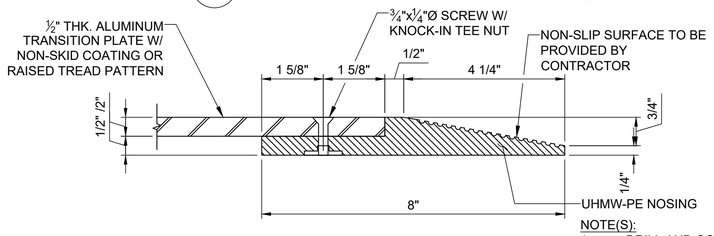

F UHMW-PE NOSING DETAIL

SCALE: 6" = 1'-0"

NOTE(S):
1. DRILL AND COUNTER BORE TRANSITION PLATES. COUNTERSINK HOLES FOR TEE NUTS TO TWICE BASE THICKNESS. SCREWS TO BE COUNTERSUNK INTO PLATE. INSTALL NEW SCREWS OVER SILICONE TO COVER EXPOSED ALUMINUM.
2. UHMW-PE NOSING DETAILS TO BE DETERMINED AFTER TRANSITION PLATE INSTALLATION AND SHALL BE IN COMPLIANCE WITH THE REQUIREMENTS SET FORTH IN ADA.

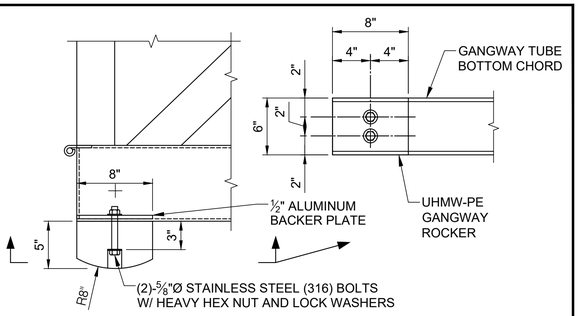

G GANGWAY ROCKER DETAIL

SCALE: 1-1/2" = 1'-0"

NOTES:
1. ROCKER MATERIAL SHALL BE VIRGIN UHMW-PE, BLACK IN COLOR.
2. ALUMINUM BACKER PLATE PLAN DIMENSIONS SHALL MATCH ROCKER PLAN DIMENSIONS.

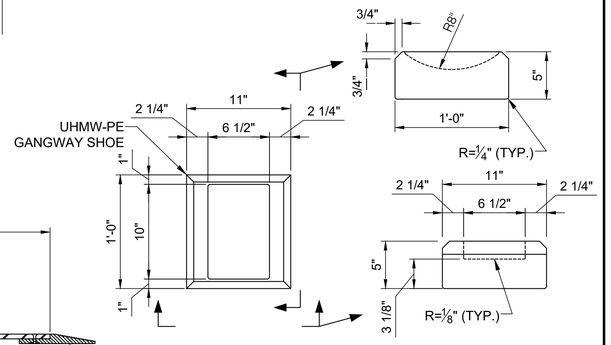

J GANGWAY SHOE DETAIL

SCALE: 1-1/2" = 1'-0"

NOTE: SHOE MATERIAL SHALL BE VIRGIN UHMW-PE, BLACK IN COLOR.

ELEVATION	MLLW	NAVD88*
BFE	+19.0	+14.0
HAT	+11.6	+6.6
MHHW	+9.7	+4.7
MHW	+9.3	+4.3
MSL	+4.8	-0.2
MLW	+0.3	-4.7
MLLW	0.0	-5.0

*PROJECT DATUM

FOR PERMIT

Attention:

0 1"

If this scale bar does not measure 1" then drawing is not original scale.

STATE OF MAINE — DANIEL J. BANNON No. 13033 — LICENSED PROFESSIONAL ENGINEER

April 22, 2024

Designed:	DJB
Drawn:	JAM
Checked:	BJB
Approved:	BMM
P.E. No:	13033
GEI Project	2203703

GEI Consultants
GEI CONSULTANTS, INC.
5 MILK STREET
PORTLAND, ME 04101
(207)797-8901

UNE
UNIVERSITY OF NEW ENGLAND
11 HILLS BEACH RD.
BIDDEFORD, MAINE

UNIVERSITY OF NEW ENGLAND MARINE SCIENCE CENTER PIER
11 HILLS BEACH ROAD
BIDDEFORD, YORK COUNTY, MAINE

NO	DATE	ISSUE/REVISION	APP
4	9/14/2023	DEP PERMIT SET	DJB
3	6/28/2023	75% DESIGN SUBMISSION	DJB
2	2/15/2023	30% DESIGN SUBMISSION	DJB
1	12/9/2022	15% DESIGN SUBMISSIONREV	DJB
0	11/11/2022	15% DESIGN SUBMISSION	DJB

SHEET NAME: **MISCELLANEOUS DETAILS (3 OF 5)**

SHEET NO.: **S-011**

MORICI, ANTHONY \\bos1v-fs02\Data_Storage\Working\UNIVERSITY OF NEW ENGLAND\2203703 UNE Marine Science Center Pier\00_CAD\Design\Sheets\2203703-S-011.dwg - 9/14/2023

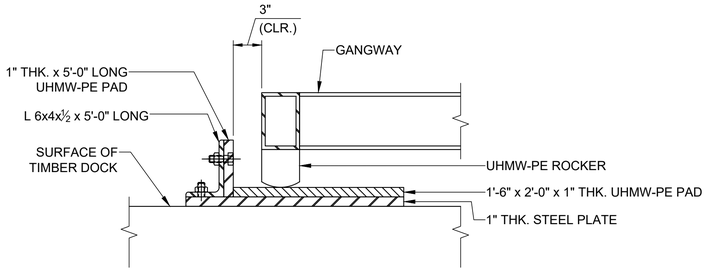

A GANGWAY LANDING AT DOCKS
SCALE: 1-1/2" = 1'-0"

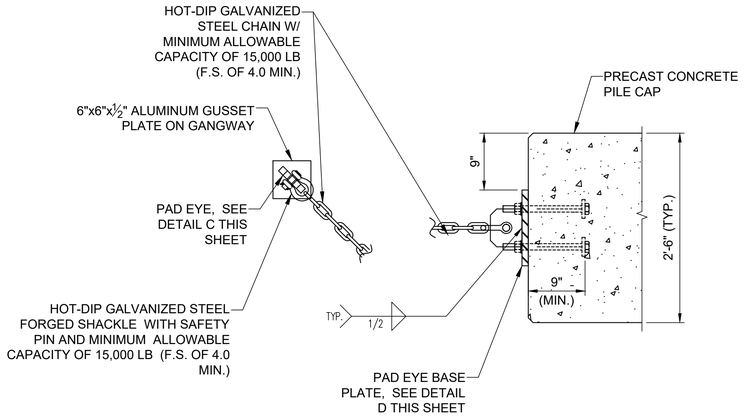

B SAFETY CHAIN ASSEMBLY
SCALE: 1" = 1'-0"

NOTE: CONTRACTOR TO DETERMINE ASSEMBLY LENGTH BASED ON PAD EYE LOCATION ON GANGWAY SUCH THAT UHMW-PE SHOE CANNOT MOVE OFF THE SUPPORTING PLATE.

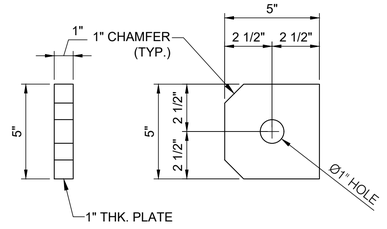

C PAD EYE DETAIL
SCALE: 3" = 1'-0"

NOTE: PAD EYE ON GANGWAY SHALL BE ALUMINUM. PAD EYE ON PILE CAP SHALL BE HDG STEEL.

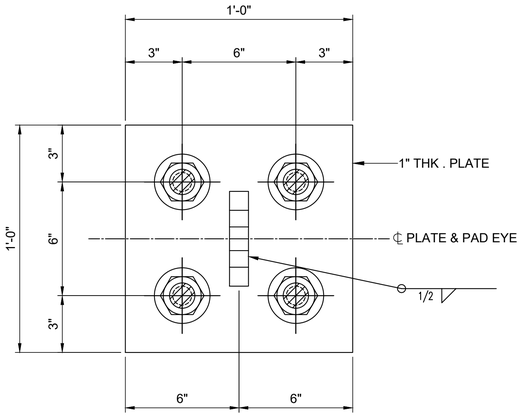

D PAD EYE BASE PLATE DETAIL
SCALE: 3" = 1'-0"

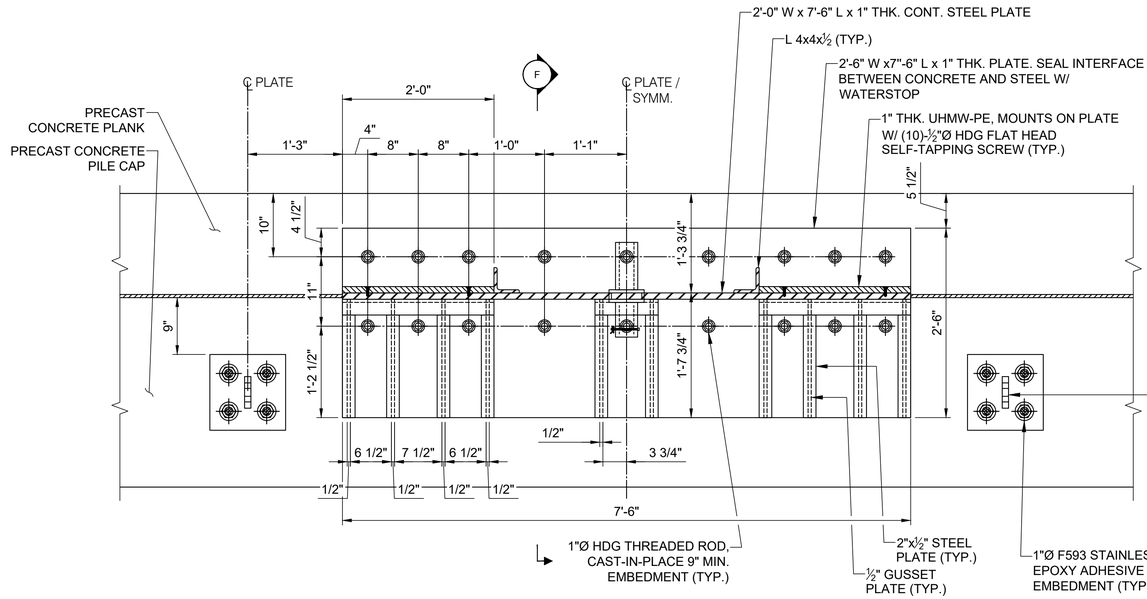

E FIFTH WHEEL ASSEMBLY - ELEVATION
SCALE: 1" = 1'-0"

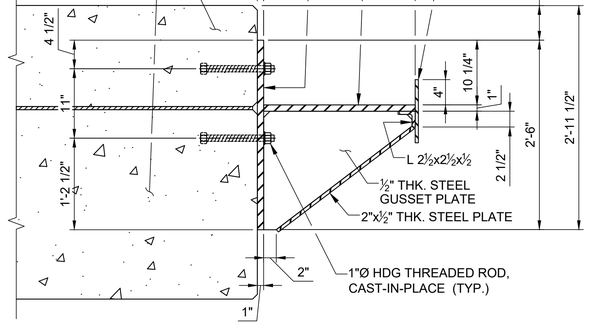

F FIFTH WHEEL ASSEMBLY - TYPICAL SECTION
SCALE: 1" = 1'-0"

ELEVATION	MLLW	NAVD88*
BFE	+19.0	+14.0
HAT	+11.6	+6.6
MHHW	+9.7	+4.7
MHW	+9.3	+4.3
MSL	+4.8	-0.2
MLW	+0.3	-4.7
MLLW	0.0	-5.0

*PROJECT DATUM

FOR PERMIT

Attention:
0 1"
If this scale bar does not measure 1" then drawing is not original scale.

STATE OF MAINE
DANIEL J. BANNON
No. 13033
LICENSED
PROFESSIONAL ENGINEER
April 22, 2024

Designed:	DJB
Drawn:	JAM
Checked:	BJB
Approved:	BMM
P.E. No:	13033
GEI Project	2203703

GEI Consultants
GEI CONSULTANTS, INC.
5 MILK STREET
PORTLAND, ME 04101
(207)797-8901

UNE
UNIVERSITY OF NEW ENGLAND
11 HILLS BEACH RD.
BIDDEFORD, MAINE

UNIVERSITY OF NEW ENGLAND MARINE SCIENCE CENTER PIER
11 HILLS BEACH ROAD
BIDDEFORD, YORK COUNTY, MAINE

NO	DATE	ISSUE/REVISION	APP
4	9/14/2023	DEP PERMIT SET	DJB
3	6/28/2023	75% DESIGN SUBMISSION	DJB
2	2/15/2023	30% DESIGN SUBMISSION	DJB
1	12/9/2022	15% DESIGN SUBMISSIONREV	DJB
0	11/11/2022	15% DESIGN SUBMISSION	DJB

SHEET NAME
MISCELLANEOUS DETAILS (4 OF 5)

SHEET NO.
S-012

MORICI, ANTHONY \\bos1v-fs02\Data_Storage\Working\UNIVERSITY OF NEW ENGLAND\2203703 UNE Marine Science Center Pier\00_CAD\Design\Sheets\2203703-S-012.dwg - 9/14/2023

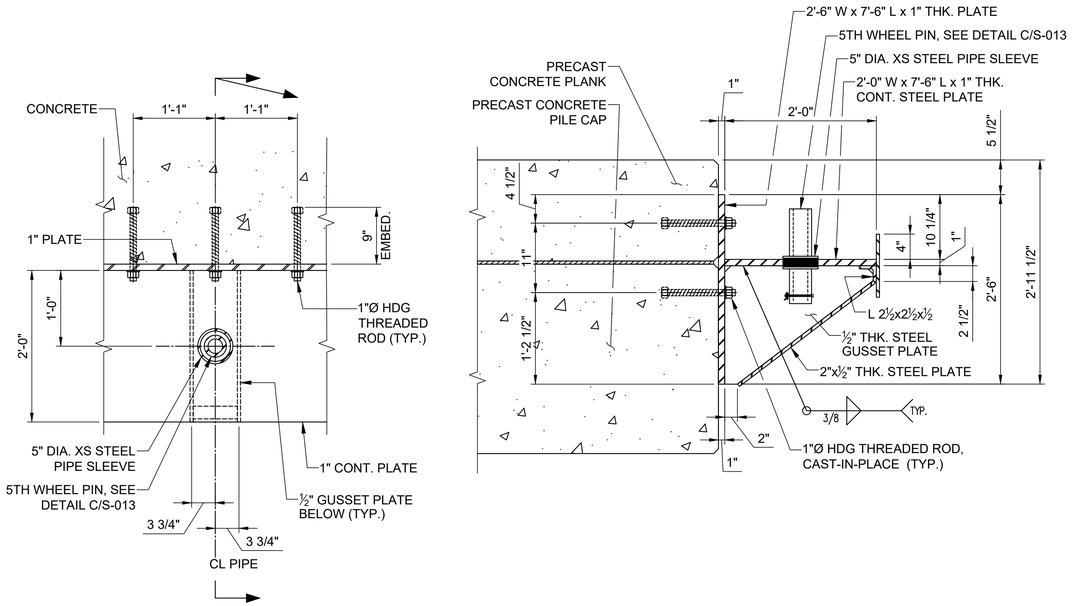

A TYPICAL 5TH WHEEL PLAN AND SECTION

SCALE: 1" = 1'-0"

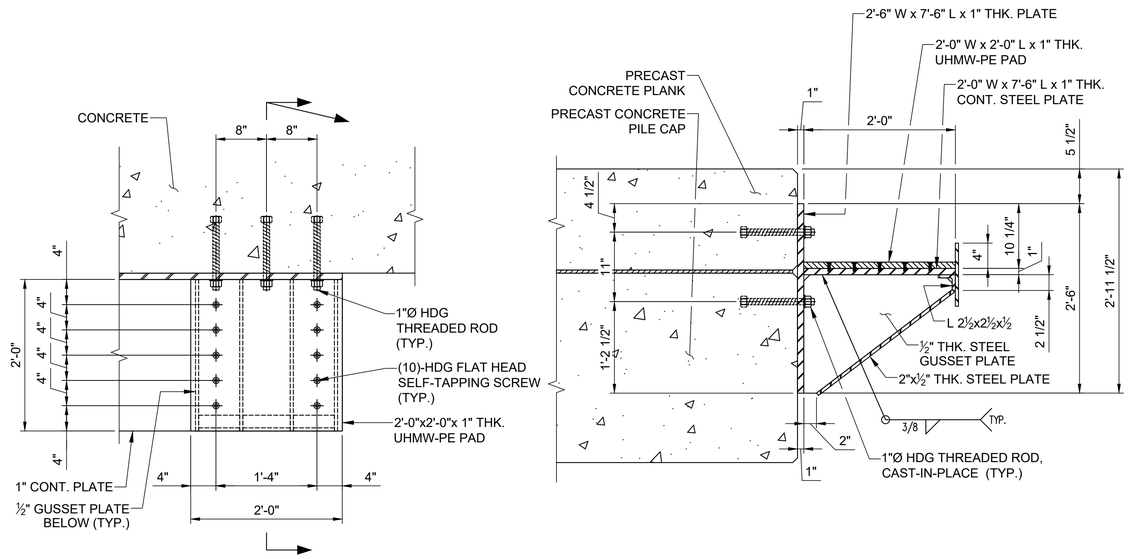

B TYPICAL UHMW-PE PAD DETAIL

SCALE: 1" = 1'-0"

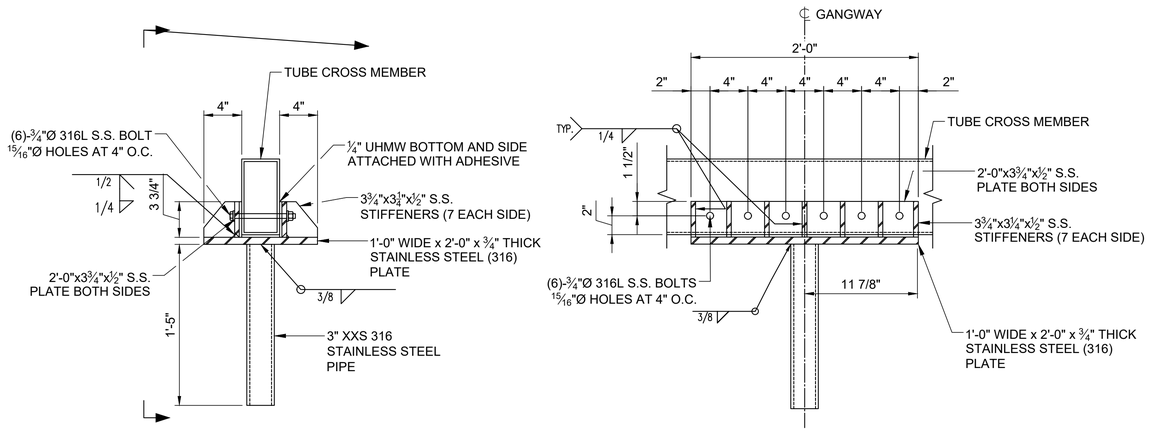

C 5TH WHEEL PIN DETAIL

SCALE: 1-1/2" = 1'-0"

ELEVATION	MLLW	NAVD88*
BFE	+19.0	+14.0
HAT	+11.6	+6.6
MHHW	+9.7	+4.7
MHW	+9.3	+4.3
MSL	+4.8	-0.2
MLW	+0.3	-4.7
MLLW	0.0	-5.0

*PROJECT DATUM

Attention:

0 1"

If this scale bar does not measure 1" then drawing is not original scale.

STATE OF MAINE
DANIEL J. BANNON
No. 13033
LICENSED PROFESSIONAL ENGINEER
April 22, 2024

Designed:	DJB
Drawn:	JAM
Checked:	BJB
Approved:	BMM
P.E. No:	13033
GEI Project	2203703

GEI Consultants
GEI CONSULTANTS, INC.
5 MILK STREET
PORTLAND, ME 04101
(207)797-8901

UNE
UNIVERSITY OF NEW ENGLAND

11 HILLS BEACH RD.
BIDDEFORD, MAINE

UNIVERSITY OF NEW ENGLAND MARINE SCIENCE CENTER PIER

11 HILLS BEACH ROAD
BIDDEFORD, YORK COUNTY, MAINE

NO	DATE	ISSUE/REVISION	APP
4	9/14/2023	DEP PERMIT SET	DJB
3	6/28/2023	75% DESIGN SUBMISSION	DJB
2	2/15/2023	30% DESIGN SUBMISSION	DJB
1	12/9/2022	15% DESIGN SUBMISSIONREV	DJB
0	11/11/2022	15% DESIGN SUBMISSION	DJB

SHEET NAME

MISCELLANEOUS DETAILS (5 OF 5)

SHEET NO.

S-013

FOR PERMIT

MCRICI, ANTHONY \\bos1vlk02\Data_Storage\Working\UNIVERSITY OF NEW ENGLAND\2203703 UNE Marine Science Center Pier\00_CAD\Design\Sheets\2203703-S-013.dwg - 9/14/2023

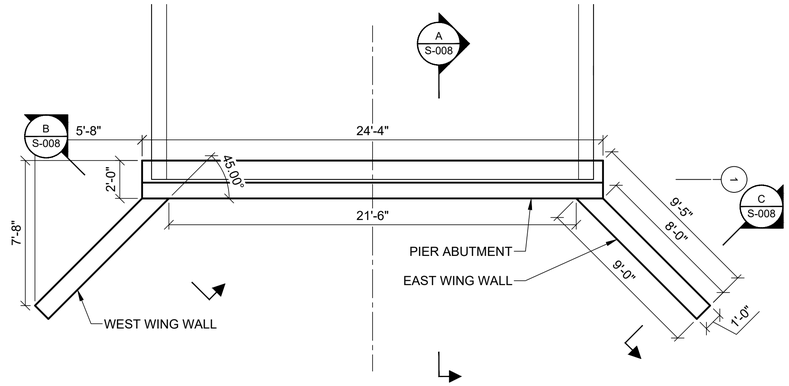

ABUTMENT PLAN
SCALE: SCALE: 3" = 1'-0"

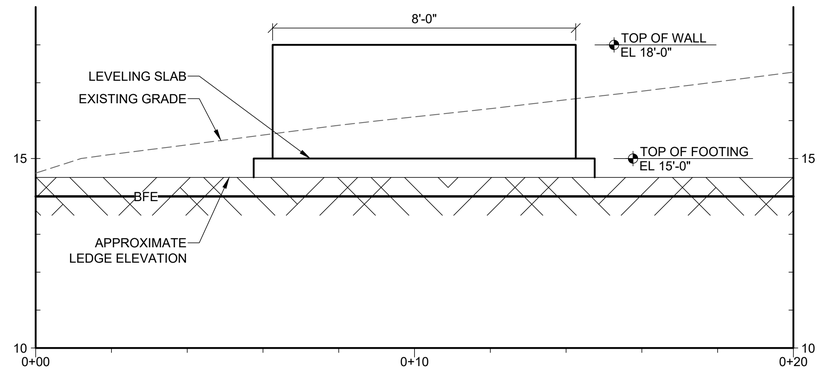

WEST WING WALL ELEVATION
SCALE: 6" = 1'-0"

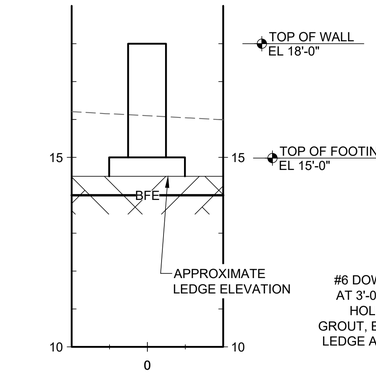

B WEST WING WALL SECTION
SCALE: 6" = 1'-0"

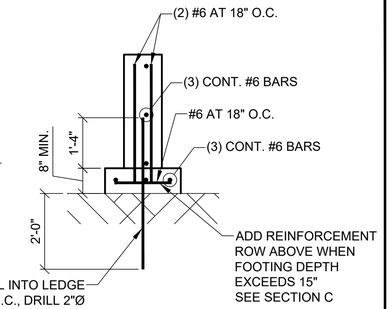

B SECTION
WEST WING WALL REINFORCEMENT
SCALE: 6" = 1'-0"

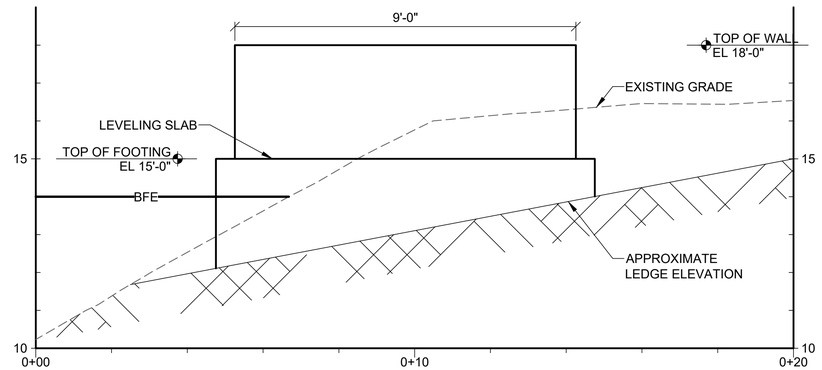

EAST WING WALL ELEVATION
SCALE: 6" = 1'-0"

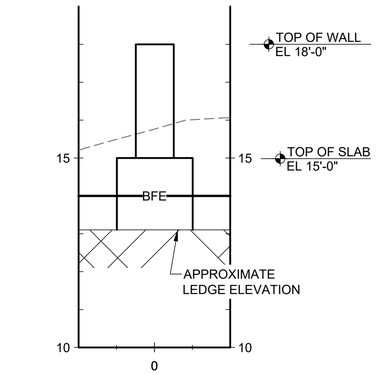

C EAST WING WALL SECTION
SCALE: 6" = 1'-0"

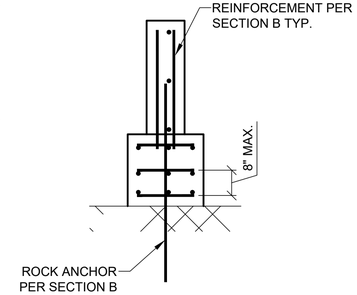

C SECTION
EAST WING WALL REINFORCEMENT
SCALE: 6" = 1'-0"

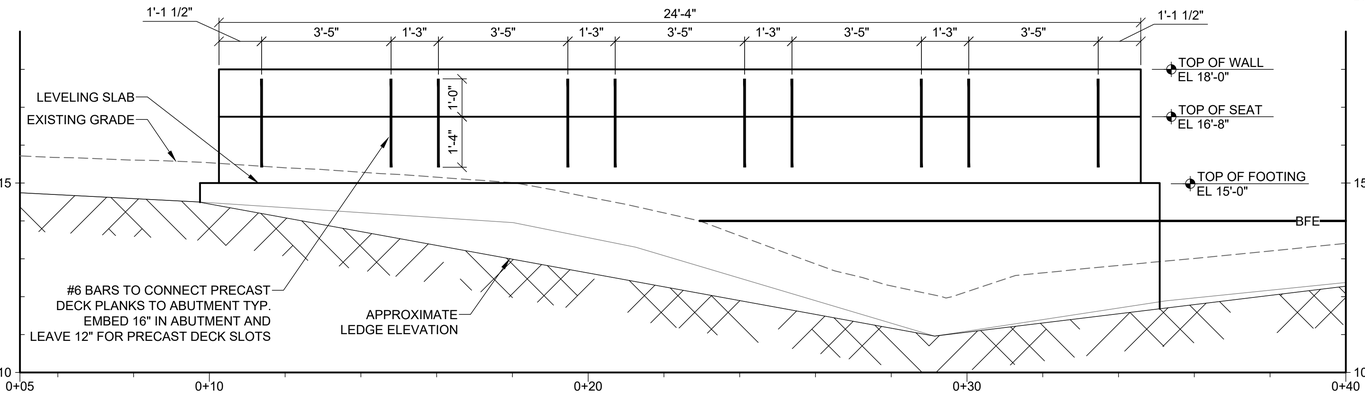

ABUTMENT ELEVATION A
SCALE: 3" = 1'-0"

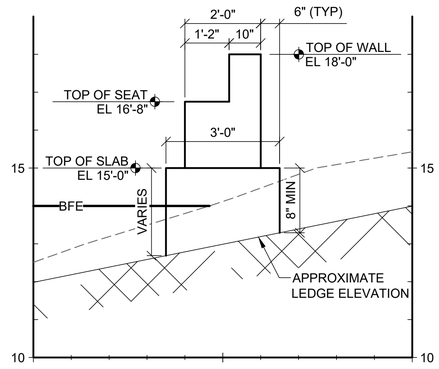

A ABUTMENT SECTION
SCALE: 6" = 1'-0"

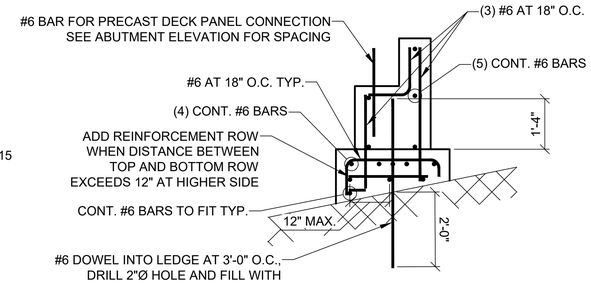

A SECTION
ABUTMENT REINFORCEMENT
SCALE: 6" = 1'-0"

FOR PERMIT

ELEVATION	MLLW	NAVD88*
BFE	+19.0	+14.0
HAT	+11.6	+6.6
MHHW	+9.7	+4.7
MHW	+9.3	+4.3
MSL	+4.8	-0.2
MLW	+0.3	-4.7
MLLW	0.0	-5.0

*PROJECT DATUM

Attention:
0 1"
If this scale bar does not measure 1" then drawing is not original scale.

STATE OF MAINE
DANIEL J. BANNON
No. 13033
LICENSED PROFESSIONAL ENGINEER
April 22, 2024

Designed:	DJB
Drawn:	JAM
Checked:	BJB
Approved:	BMM
P.E. No:	13033
GEI Project	2203703

GEI Consultants
GEI CONSULTANTS, INC.
5 MILK STREET
PORTLAND, ME 04101
(207)797-8901

UNIVERSITY OF NEW ENGLAND
11 HILLS BEACH RD.
BIDDEFORD, MAINE

UNIVERSITY OF NEW ENGLAND MARINE SCIENCE CENTER PIER
11 HILLS BEACH ROAD
BIDDEFORD, YORK COUNTY, MAINE

NO	DATE	ISSUE/REVISION	APP
4	9/14/2023	DEP PERMIT SET	DJB
3	6/28/2023	75% DESIGN SUBMISSION	DJB
2	2/15/2023	30% DESIGN SUBMISSION	DJB
1	12/9/2022	15% DESIGN SUBMISSIONREV	DJB
0	11/11/2022	15% DESIGN SUBMISSION	DJB

SHEET NAME: **ABUTMENT DETAILS**

SHEET NO.: **S-014**

MORICI, ANTHONY \\ost1-fs02\Data_Storage\Working\UNIVERSITY OF NEW ENGLAND\2203703 UNE Marine Science Center Pier\00_CAD\Design\Sheets\2203703-S-014.dwg - 9/14/2023

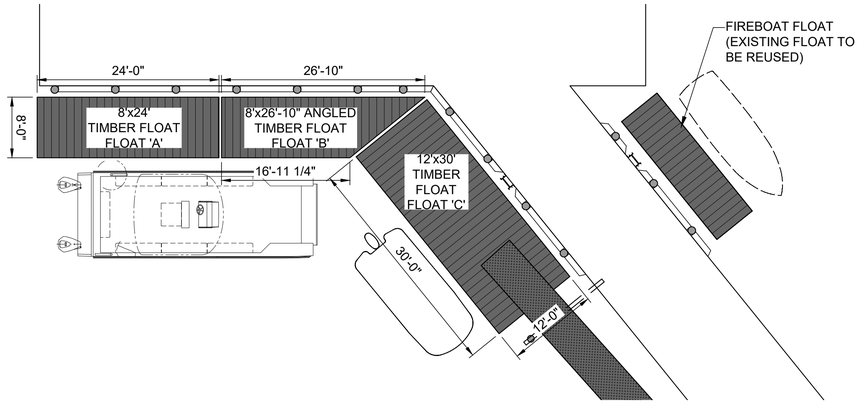

1 PLAN
FLOAT LAYOUT SCALE: 1" = 10'

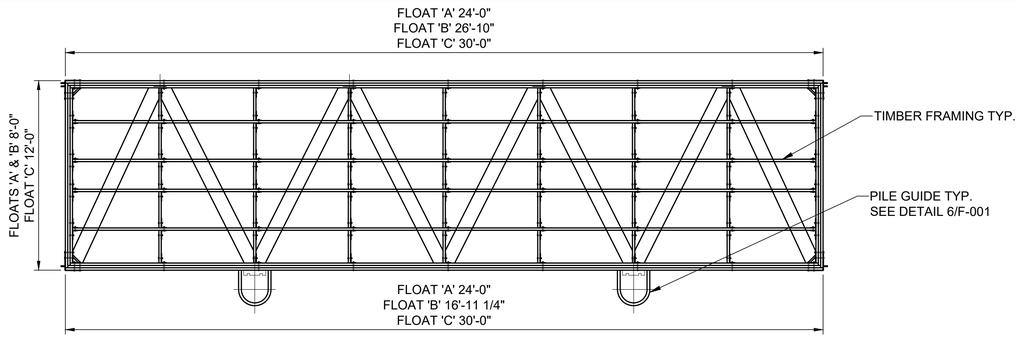

NOTES:
1. CONTRACTOR/FABRICATOR TO DETERMINE ACTUAL MEMBER SIZES PER LOADING REQUIREMENTS.

2 PLAN
TYP. FLOATING DOCK SCALE: 1" = 4'

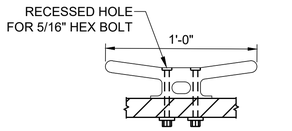

CLEAT LAYOUT:
FLOAT 'A' (4) @ EQ. SP ON SOUTH FACE
FLOAT 'B' (3) @ EQ. SP ON SOUTH FACE
FLOAT 'C' (4) @ EQ. SP ON WEST FACE

4 DETAIL
12" CLEAT SCALE: 2:1

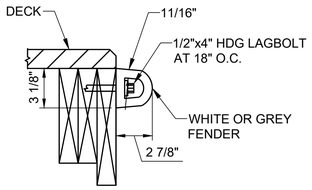

5 DETAIL
DOCK FENDER SCALE: 2:1

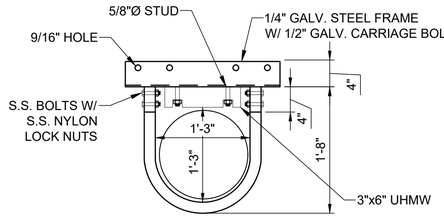

PILE GUIDE LAYOUT:
PROVIDE PILE GUIDES AT ALL TIMBER PILE LOCATIONS
FLOAT 'A' (3) REQ
FLOAT 'B' (4) REQ
FLOAT 'C' (4) REQ

6 DETAIL
PILE GUIDE SCALE: 1:1

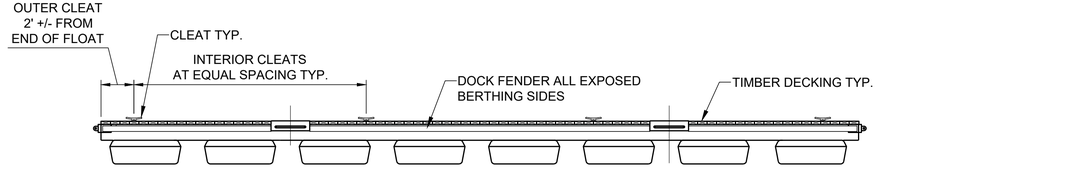

NOTES:
1. FLOTATION UNITS SHOWN ARE FOR GRAPHIC REPRESENTATION ONLY, CONTRACTOR/MANUFACTURER SHALL DETERMINE SIZE AND QUANTITY PER LOADING REQUIREMENTS.

3 ELEVATION
TYP. FLOATING DOCK SCALE: 1" = 4'

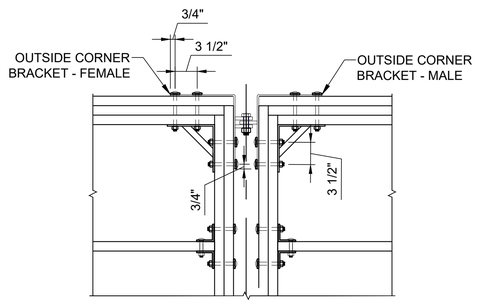

7 DETAIL
FLOAT CONNECTION SCALE: 1:1

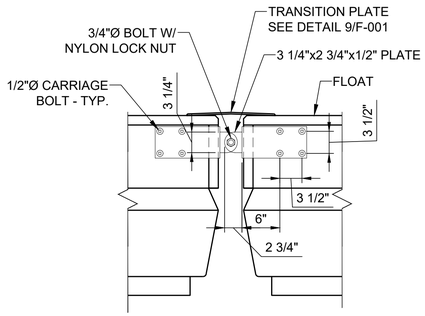

8 SECTION
FLOAT CONNECTION SCALE: 1:1

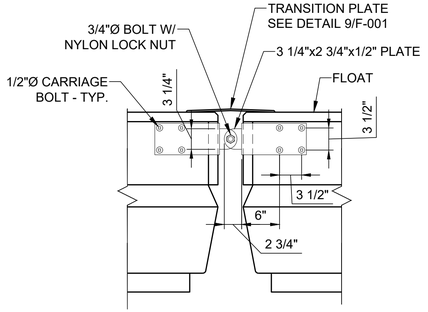

9 DETAIL
TRANSITION PLATE SCALE: 1:1

0 10 20
SCALE, FEET

0 1 2 4
SCALE, FEET

0 40 80
SCALE, FEET

ELEVATION	MLLW	NAVD88*
BFE	+19.0	+14.0
HAT	+11.6	+6.6
MHHW	+9.7	+4.7
MHW	+9.3	+4.3
MSL	+4.8	-0.2
MLW	+0.3	-4.7
MLLW	0.0	-5.0

*PROJECT DATUM

FOR PERMIT

Attention:
0 1"
If this scale bar does not measure 1" then drawing is not original scale.

STATE OF MAINE
DANIEL J. BANNON
No. 13033
LICENSED PROFESSIONAL ENGINEER
April 22, 2024

Designed:	DJB
Drawn:	JAM
Checked:	BJB
Approved:	BMM
P.E. No:	13033
GEI Project	2203703

GEI Consultants
GEI CONSULTANTS, INC.
5 MILK STREET
PORTLAND, ME 04101
(207)797-8901

UNIVERSITY OF NEW ENGLAND
11 HILLS BEACH RD.
BIDDEFORD, MAINE

UNIVERSITY OF NEW ENGLAND MARINE SCIENCE CENTER PIER
11 HILLS BEACH ROAD
BIDDEFORD, YORK COUNTY, MAINE

NO	DATE	ISSUE/REVISION	APP
4	9/14/2023	DEP PERMIT SET	DJB
3	6/28/2023	75% DESIGN SUBMISSION	DJB
2	2/15/2023	30% DESIGN SUBMISSION	DJB
1	12/9/2022	15% DESIGN SUBMISSIONREV	DJB
0	11/11/2022	15% DESIGN SUBMISSION	DJB

SHEET NAME
FLOAT PLAN AND DETAILS

SHEET NO.
F-001

MCRICI, ANTHONY \\geiconsultants.com\data\Data_Storage\Working\UNIVERSITY OF NEW ENGLAND\2203703 UNE Marine Science Center Pier\00_CAD\Design\Sheets\2203703-F-001.dwg - 9/14/2023

CITY OF BIDDEFORD - SITE PLAN & SUBDIVISION APPLICATION DRAWING CHECKLIST *LAST REVISED: 11/26/2024*

CHECKLIST DIRECTIONS:

1. The following checklist must be completely filled out by the applicant and included on all preliminary and final Site Plan & Subdivision submittals. No checklist is required for sketch submittals.
2. Applicant to confirm all of the items listed are included within the submittal. Any missing items must have adequate reasoning to justify their absence.
3. City to review applicant's submittal and checklist responses. Projects missing substantial submittal information with non-acceptable reasoning will be rejected and required to resubmit.
4. Items in **BLACK** are required for 'Preliminary' approval & 'Final' approval.
5. Items in **BLUE** are only required for 'Final' approval.

SUBMITTAL INFORMATION - TO BE FILLED OUT BY APPLICANT	
Project Name:	University of New England (UNE) Marine Science Center Research Pier
Planning Board # (if available):	2024.34
Applicant Name/Info:	University of New England
Submittal #/Type (Prelim/Final):	Preliminary
Submittal Date:	6/10/2025

SUBMITTAL REQUIREMENT		APPLICANT RESPONSE			CITY REVIEW RESPONSE	
ITEM NUMBER	DESCRIPTION	INFORMATION PROVIDED (YES/NO)	LIST DRAWING SHEET NUMBER WHERE INFORMATION IS PROVIDED	REASON NOT PROVIDED/COMMENT	ACCEPTABLE (YES/NO-REVISE & RESUBMIT)	COMMENT
1	**GENERAL PLAN REQUIREMENTS**	YES				
A	Drawing specific legends (linetypes, hatches, etc.)	YES	C-001, C-002			
B	Individual drawing layer control should be utilized: freeze/thawing, changing lineweights, and screening (i.e. screen existing layers on a proposed plan, freeze topography and underground utilities on a proposed site plan)	YES	ALL			
C	North arrows, standard engineering scale viewports, scale bars, dated revision blocks	YES	ALL			
D	All drawings and surveys must be in the following coordinate systems: NAD83 Maine State Plane West (Horizontal) and NAVD88 (Vertical)	YES	ALL			
E	Drawings need to be designed, signed & sealed by a Maine licensed professional engineer (PE); all boundary survey data needs to be performed by a licensed professional land surveyor (PLS)	YES	ALL			
2	**COVER SHEET**	YES				
A	Project Name & Property Address	YES	G-001			
B	Project Team Contact Information (Owner, Engineer, Contractor, etc.)	YES	G-001, G-002	Contractor contact info to be added at a later date		
C	Site Location Map	YES	G-001			
D	Sheet Set List of Drawings	YES	G-001			
E	Tax Map and Lot ID	YES	C-001			
F	Zoning & Shoreland Zone Information	YES	C-001			
G	Existing Use Description	YES	C-001			
H	Proposed Use Description	YES	C-003			
I	Required Waiver/Variances (Yes/No); if yes, plan must clearly list waivers/variances requesting	YES	G-001			
J	Name of Drainage Watershed	YES	C-001			
K	Within the MS4 Urbanized Area (Yes/No)	YES	C-001			
L	Natural resources (streams, wetlands, etc.) located on-site or adjacent to the property (Yes/No)	YES	C-001			
M	Within the 100-year Flood Zone (Yes/No)	YES	C-001			
N	Public Road Proposed (Yes/No)	NO	N/A	There are no public roads onsite.		
O	Private Road Proposed (Yes/No)	YES	C-001			
P	Public Sewer Connection (Yes/No)	YES	C-001	There are no proposed improvements to the public sewer		
Q	Public Storm Drain Connection (Yes/No)	NO	N/A	There are no public storm drains onsite.		
R	Limits of Disturbance in square feet and acres	YES	C-005			
S	Pervious Land Cover square footage, existing and proposed	YES	C-003			
T	Impervious Land Cover square footage (Pavement/Gravel), existing and proposed	YES	C-003			
U	Building Roof square footage, existing and proposed	YES	C-001			
V	Assigned Planning Board Number	YES	G-001			
W	Estimated cut/fill earthwork volumes. If disturbing within the Flood Zone, a separate set of earthwork volumes required (overall site vs. within flood zone)	YES	C-007, C-007			
3	**EXISTING CONDITIONS PLAN**					
A	Horizontal & Vertical Datums annotated (NAD83 & NAVD88)	YES	C-001			
B	Property & Right-of-Way Lines	YES	C-001			
C	Boundary line information (bearings, distances, etc.)	YES	C-001			
D	Property pin and monumentation locations	YES	C-001			
E	Existing easements with proper ownership identified	YES	C-001			
F	Road Names & Individual Lot Labels (Map, Lot, Owner, Acreage)	YES	C-001			
G	Location of any Natural Resources and their respective buffers (wetlands, streams, etc.)	YES	C-001			
H	100-year Flood Zone Limits & Elevation	YES	C-001			
I	Existing contours with adequate contour labelling; minimum 1' contour interval	YES	C-001			
J	Existing building FFEs annotated	YES	C-001			
K	Spot elevations for all tie-in locations (curb cuts, property line)	YES	C-001			
L	Existing buildings & structures	YES	C-001			
M	Existing pavement areas & number of parking spaces	YES	C-001			
N	Existing ADA ramp geometry, detectable warning plates, and ADA parking spaces	YES	C-001			
O	Existing site features (sidewalks, retaining walls, curbing, lightpoles, guide rails, dumpsters, fencing)	YES	C-001			
P	Existing signage and striping	YES	C-001			
Q	Existing underground utility locations (storm, sewer, force main, water, gas, elec, tele)	YES	C-001			
R	Existing above-ground utility locations (manholes, catch basins, utility poles, hydrants, transformers, riprap)	YES	C-001			
S	Rim, invert in, invert out, pipe size, cardinal direction (N, E, S, W) information for any existing utility infrastructure being tied into (upstream/downstream/outfalls)	YES	C-001			
T	Existing tree lines, street trees, free-standing trees (12" or larger diameter at breast height), and vegetation	YES	C-001			
U	Location of any borings, drinking wells, and monitoring wells	YES	C-001			
4	**SITE DEMOLITION & EROSION CONTROL (E&SC) PLAN**					
A	Limits-of-disturbance outlined and acreage annotated	YES	C-005			
B	Location of any Natural Resources and their respective buffers (wetlands, streams, etc.)	YES	C-001			
C	100-year Flood Zone Limits	YES	C-001			
D	Callout existing site features to be demolished/removed/replaced	YES	C-002			
E	Callout existing utilities to be demolished/removed/abandoned-in-place	YES	C-002			
F	Hatch existing buildings and pavement to be removed	YES	C-002			
G	Construction Entrance location(s)	YES	C-005			
H	Perimeter E&SC control location(s) (i.e. silt fence, erosion berm mix)	YES	C-005			
I	Stockpile and staging area(s) identified (with proper perimeter control)	YES	C-005			
J	Inlet protection location(s)	YES	C-005			
K	Note requiring contractor to implement dust control measures throughout construction	YES	C-012			
L	Note requiring contractor to pave utility trenches within right-of-way within 3 days of excavation or prior to any rain event	N/A	N/A	No utilties proposed within right-of-way		
M	If groundwater expected, show dewatering/silt bag location(s); show temporary pumping routing	YES	C-014			

N	If large development is proposed with an extensive underground stormwater conveyance network, identify how SWM infrastructure and BMPs will be protected during construction and if sediment traps/basins are needed	N/A		No extensive underground SWM infrastructure is proposed.		
5	**SITE PLAN/SUBDIVISION PLAN**	YES				
A	Partial Site Plans needed for any viewport scale greater than 1"=20'	YES	C-003			
B	Existing property and right-of-way lines	YES	C-003			
C	Proposed subdivision lot lines and labels	YES	C-003			
D	Required Zoning Setbacks shown with dimensions and annotation	YES	C-003			
E	Bulk requirement summary table (zoning/parking calculations)	YES	C-003			
F	Location of any Natural Resources and their respective buffers (wetlands, streams, etc.)	YES	C-003			
G	100-year Flood Zone Limits	YES	C-003			
H	Proposed building outlines, door entrances and loading docks	YES	C-003			
I	Proposed building labels	YES	C-003			
J	Proposed road & sidewalk extents; provide clear annotation if roads will be public or private	YES	C-003			
K	Proposed parking and accessible parking locations; annotate parking space counts	YES	C-003			
L	Proposed signage, parking striping, and traffic striping	YES	C-003			
M	Detailed ADA ramp geometry, detectable warning surfaces, and ADA parking striping/signage; existing & proposed	NO		No ADA ramps or parking are proposed		
N	Proposed site features (i.e. curbing, walls, fencing, guiderail, fire hydrant, transformers, light pole locations)	YES	C-003, C-004, C-006, C-007			
O	Proposed landscaping; detailed landscaping design should be shown on separate plans	YES	C-015, C-016			
P	Designated snow storage areas	NO		No snow storage areas are proposed		
Q	Proposed dumpster locations and trash removal access	NO		No dumpsters or trash removal are proposed.		
R	Linear dimensions of all drive aisles, sidewalk widths, parking spaces, loading docks	YES	C-003, C-006, C-007			
S	Radial dimensions for all curbs, landscaped islands, sidewalks	YES	C-003			
T	Public/private road centerline stationing shown, labelled every 0+50' with curve data	YES	C-003, C-006, C-007			
U	If Private Road is proposed, final recorded plans must clearly note that proposed private roads will not be submitted in the future for public acceptance	NO		Will be provided at a later date		
V	If Private Road is proposed, final recorded plans must clearly note that the City is not responsible for any maintenance, repair, plowing, or trash removal of proposed private roads	NO		Will be provided at a later date		
W	Planning Board signature block for final recording	YES	G-001			
6	**GRADING PLAN**	YES				
A	Partial Grading Plans needed for any viewport greater than 1"=20'	YES	C-004, C-006, C-007			
B	Limits-of-disturbance outlined and acreage annotated	YES	C-004, C-006, C-007			
C	Proposed Building Labels with Individual Finished Floor Elevations (FFEs)	YES	C-004, C-006, C-007			
D	Existing contours with adequate contour labelling, screened; minimum 1' contour interval	YES	C-004, C-006, C-007			
E	Proposed contours with adequate contour labelling; minimum 1' contour interval	YES	C-004, C-006, C-007			
F	Detailed grading for all ditches, swales, outfalls, and riprap	YES	C-004, C-006, C-007			
G	All proposed contours tie-into existing contours at limits-of-disturbance outline	YES	C-004, C-006, C-007			
H	Existing spot elevations for all asphalt, curb, and SWM BMP tie-in locations	YES	C-004, C-006, C-007			
I	Location of any Natural Resources and their respective buffers (wetlands, streams, etc.)	YES	C-004, C-006, C-007			
J	100-year Flood Zone Limits	YES	C-004, C-006, C-007			
K	Proposed spot elevations for all important roadway geometric points (including but not limited to: parking/drive aisles, building corners/entrances, retaining walls, loading docks, EOP/curblines)	YES	C-004, C-006, C-007			
L	Proposed spot elevations for all ADA ramp/landing/parking stall geometry points	N/A	No new ADA proposed			
M	Proposed % slope arrows for all ADA parking spaces and sidewalks	N/A	No new parking proposed			
N	Proposed longitudinal % slope arrows for drainage ditch centerlines	YES	C-004, C-006, C-007			
O	Proposed % slope arrows for roads, parking areas, and landscape tie-in areas	YES	C-004, C-006, C-007			
P	Estimated cut/fill earthwork volumes. If disturbing within the Flood Zone, a separate set of earthwork volumes required (overall site vs. within flood zone)	YES	C-004, C-006, C-007			
7	**ROAD PROFILES (if public/private road proposed)**	YES				
A	Existing surface; dashed and screened	YES	C-006, C-007			
B	Proposed surface; continuous and bold	YES	C-006, C-007			
C	Road design speed must be clearly identified	YES	C-006, C-007			
D	Corresponding centerline stationing and curve data annotation	YES	C-006, C-007			
E	All vertical curves must identify the proposed 'K' values and confirm they meet the minimum design speed thresholds listed in AASHTO's Green Book Tables 3-35 & 3-37	YES	C-006, C-007			
F	Clear annotation if proposed road will be public or private	YES	C-006, C-007			
G	If Private Road is proposed, plans must clearly note that proposed private roads will not be submitted in the future for public acceptance	YES	C-003			
H	If Private Road is proposed, plans must clearly note that the City is not responsible for any maintenance, repair, plowing, or trash removal of proposed private roads	YES	C-003			
8	**UTILITY PLAN**					
A	Existing underground utility locations; screened (storm, sewer, force main, water, gas, electric, telecom)	YES	C-004			
B	Existing above-ground utility locations; screened (manholes, catch basins, utility poles, hydrants, riprap)	YES	C-004			
C	Rim, invert in, invert out, pipe size, cardinal direction (N, E, S, W) information for any existing utility infrastructure being tied into (upstream/downstream/outfalls)	YES	C-004			
D	Proposed underground utility locations; bold (storm, sewer, force main, water, gas, electric, telecom, lighting)	YES	C-004, ES1.1			
E	Proposed above-ground utility locations; bold (manholes, catch basins, utility poles, hydrants, transformers, riprap)	YES	C-004			
F	Proposed storm culverts, outfalls, and riprap locations and sizes	YES	C-004 to C-007			
G	Storm/sewer structure labels must include: rim, inverts in, inverts out, pipe sizes, cardinal directions (N, E, S, W)	YES	C-004 to C-007			
H	Storm/sewer pipe labels must include: linear footage, pipe size, material, slope	YES	C-004 to C-007	Additional information can be found in the SWM Report		
I	Flow directional arrows for storm & sewer pipes	YES	C-004 to C-007			
J	Proposed & existing site features shown that could conflict with proposed utilities (trees, signs, lightpoles, bollards, foundations, guiderails)	YES	C-004 to C-007			
K	All storm drains must be sized to convey the 25-year storm	YES	C-004 to C-007	See SWM Report		
L	Sewer force main sizes and invert elevations	NO	N/A	No force main proposed		
M	Sewer pump station locations, model, rim, inverts, pipe sizes, cardinal directions (N,E,S,W); additional details and hydraulic calculations required for any Public pump station proposed.	NO	N/A	No pump stations proposed		
N	Locations, sizes, and elevations of any: grease traps, oil-water separators, septic systems, drinking wells	NO	N/A	None proposed		
O	Proposed water sizes labelled	NO	N/A	None Proposed		
9	**UTILITY PROFILES**					

A	Utility profiles required for **all** gravity storm drain and sewer pipes proposed: within the right-of-way, within private or public roads, for non-driveway culverts, and for any public infrastructure tie-ins	NO	N/A	No utilties proposed in ROW		
B	Existing surface; dashed and screened	NO	N/A	No utilties proposed in ROW		
C	Proposed surface; continuous and bold	NO	N/A	No utilties proposed in ROW		
D	Storm/sewer structure labels must include: rim, inverts in, inverts out, pipe sizes, cardinal directions (N, E, S, W)	NO	N/A	No utilties proposed in ROW		
E	Storm/sewer pipe labels must include: linear footage, pipe size, material, slope	NO	N/A	No utilties proposed in ROW		
F	Existing and proposed gravity pipe crossings shown; sizes labelled and depths/clearance annotated	NO	N/A	No pipe crossing proposed		
G	Existing and proposed electric/water/telecom/gas crossings shown at approximate depths; sizes labelled and depths/clearance annotated	YES	ES1.1			
10	**DETAILS**					
A	Road section detail, including pavement/gravel depths & cross slopes	YES	C-008, C-009, C-010			
B	Sidewalk, paver, crosswalk, and any other pavement section details	N/A	None proposed			
C	Pavement sawcut & shiplap details	YES	C-003, C-006, C-007			
D	Utility trench/backfill detail	YES	C-011			
E	All site feature details; curbing, retaining walls, fencing, guiderails, dumpsters, etc.	YES	C-011, C-013, C-014			
F	Signage, striping, and ADA details	N/A	N/A	No signage or striping proposed		
G	E&S notes and details	YES	C-012, C-013, C-014			
H	Utility structure details (manholes, cleanouts, fittings, handholes, transformer pads, hydrants)	YES	C-013, C-014			
I	Storm outfall & riprap details	YES	C-011			
J	Drainage ditch cross section identifying minimum depth, minimum bed width, and maximum side slopes	NO	C-013, C-014			
K	Pump station, grease trap, oil-water separator, septic, drinking well details	N/A	N/A	None Proposed		
L	Conduit section details	N/A	N/A	None Proposed		
11	**LANDSCAPING, LIGHTING & PHOTOMETRIC PLANS**					
A	As required by ordinance; at a minimum: locations, counts, lighting models, and landscaping species must be identified	YES	C-015, C-016, ES1.1			
B	Landscaping & lighting details	YES	C-015, C-016, ES1.1			
12	**DOCUMENTS/REPORTS/CALCULATIONS**					
A	On initial preliminary submittal applications, applicant must submit a development review and inspection fee. Applicant to coordinate fee amount with City Planner prior to submittal. This fee will be drawn against to cover the following type of services throughout the project life cycle (and may require replenishing): i. 3rd Party City Peer-Review ii. Site Inspections during the permitting process iii. Erosion & Sediment Control Inspections during construction iv. Right-of-Way Inspections during construction v. Site Punchlist/As-Built Inspections post-construction	Yes				
B	Stormwater Management Report, including: 1. Predevelopment & Post-development Drainage Area Maps, including: a. Subdrainage areas delineated and labeled b. Points of Interest/Analysis shown and labeled c. Hatching for different land cover areas (impervious, pervious, gravel) within each applicable USDA soil boundary d. Time of concentration (Tc) paths & durations e. Four City-standardized stormwater summary tables 2. If any SWM water quality BMP or detention facility is proposed, hydrologic model exports/hydrographs must be submitted for the for the 2, 10, 25, & 100-year storm frequencies 3. Sizing calculations for any SWM water quality BMP or detention facility 4. A stormwater maintenance manual for any proposed SWM water quality BMP or detention facility, including: a. Annual maintenance requirements b. Annual inspection requirements by a licensed PE; noting that all inspection reports/logs need to be submitted to the Engineering Department by March 1st each following year, identifying what on-going maintenance has occurred and what remedial repairs are needed c. Signed Property Owner Agreement: including the current property owner's contact information and signature; it must be noted that all stormwater BMP maintenance requirements are linked to the property for perpetuity and transfer to any new ownership	Yes				
C	An approved 'Sewer Ability-to-Serve Letter' from the Engineering Department: i. Applicant to submit proposed sewer flow calculations per Maine's Subsurface Wastewater Disposal Rules, Chapter 241, Section 4 (Tables 4A & 4C)	N/A		No new buildings/sewer conveyance proposed		
D	A Performance Guarantee Cost Estimate utilizing Planning's template	YES				
E	For any Site Location of Development (SLODA) project, the applicant's submittal must mimic a formal submittal to DEP. Submit must abide to DEP's SLODA application and include DEP's SLODA Submittal Checklist (Form D)	YES				
F	25-year hydraulic calculations for all storm conveyance infrastructure (pipes, culverts, drainage ditches); starting tailwater conditions/documentation must be clearly identified	YES				
K	Public sewer pump station sizing calculations and maintenance plan	N/A	No pump stations proposed	No pump stations proposed		
M	Grease trap sizing calculations	N/A	No grease traps proposed	No grease traps proposed		
N	Homeowner Association (HOA) agreement for any private road serving two (2) lots or more	N/A	No HOA	No HOA		
O	Summary list & copy of any required DOT/DEP/USACE permits & approvals	YES				

CITY OF BIDDEFORD, MAINE

SHORELAND AND SITE PLAN REVIEW APPLICATION

Project:
RESEARCH PIER

Applicant:

UNIVERSITY OF NEW ENGLAND
11 HILLS BEACH ROAD
BIDDEFORD, MAINE 04005

June 9, 2025

Prepared by:

Site Design Associates
23 Whitney Way
Topsham, Maine 04086
Ph: 207-449-4275
Email: info@sitedesignassociates.biz

Site Design Associates
Consulting Engineering and Land Planning

June 9, 2025

David Galbraith, City Planner
City of Biddeford
P.O. Box 586
205 Main Street
Biddeford, ME 04005

RE: University of New England
Proposed Research Pier

Dear David and Planning Board Members:

University of New England is pleased to submit the enclosed application for site plan review and shoreland permits for a proposed research pier and floats at 11 Hills Beach Road in Biddeford. Enclosed are 10 copies of the site plan, and the following information submitted electronically per the direction from your office:

- Letter responding to May 13, 2025 staff comments – Attachment A
- Letter responding to Planning Board Member Comments - Attachment B
- City Application
- Letter of Agent Authorization
- Site Plan Drawing Checklist
- Location Map
- Deed
- Letter of Financial Capacity
- Stormwater Management Report
- Alternatives Analysis and Memo
- ACOE, DEP, and SRCC Permits
- Letter from the Maine Historic Preservation Commission clearing the project
- Notice to Proceed with external reviews from the city
- Typical shed photo
- Light fixture cuts
- Drawing Set

We understand the application fee has been paid in full.

The project is located in the city Institutional (IN) zone and the Limited Residential District shoreland zone. The project was included on the most recent version of the city approved campus master plan.

The Biddeford Campus of the University of New England (UNE), Maine's largest private university, is positioned on the confluence of the Saco River and the Atlantic Ocean. This location, along with state-of-the-art research facilities and world-class faculty, has recently earned UNE's marine programs rankings among the top 10 nationally from *Biology Explorer*, *College Choice*, and *College Magazine*. To expand UNE's unique

experiential learning and research opportunities in the marine ecosphere, the University is proposing the construction of a permanent pier which will serve as a four-season research deployment facility directly adjacent to the Arthur P. Girard Marine Science Center (GMSC) on its Biddeford campus

UNE's School of Marine and Environmental Programs, housed in the GMSC, is the academic home of 325 undergraduate and graduate students who are studying marine science, marine policy and management, as well as a wide variety of interdisciplinary fields, including marine ecosystems, conservation, restoration, business, sustainable fisheries and ecological aquaculture, social-ecological systems, and marine sustainability science. Additionally, two programs provide pathways from undergraduate to graduate degrees in Marine Sciences and Maritime Law (a 3+3 partnership with Maine Law).

Three things distinguish UNE's marine programs. The first is the oceanfront location on its core undergraduate campus, which provides direct access to the Gulf of Maine. The second is the multitude of research opportunities available to students starting as early as their first year of undergraduate studies. And the third is how the marine research done by UNE students and faculty directly impacts the people of Maine and beyond.

However, all three of these key assets are limited by the lack of year-round access to the ocean. ***The planned pier will allow students and faculty to be on the water throughout the year, thereby greatly enhancing UNE's groundbreaking research into critical problems facing Maine.***

The jewel of UNE's marine programs is Ram Island, UNE's private one-acre living laboratory two miles from campus in Saco Bay, which was gifted to the University in 2014. The island, which houses a fieldwork station and an experimental kelp farm, provides unparalleled research and field study opportunities for students and faculty. It also creates the potential to develop research partnerships that focus on critical issues facing Maine, making Ram Island home to coastal zone investigations of climate change, marine geology, invasive species, marine mammal ecology and interactions with fisheries and marine aquaculture.

Despite its prime location with direct access to the ocean, UNE currently has floating docks that are removed seasonally, precluding access to Ram Island and other areas of the Gulf of Maine in the critical winter and spring months. Construction of a permanent pier at UNE's Girard Marine Science Center will allow for dynamic, year-round, ocean-going research activities, facilitating scientific and practical exchanges with local, regional, and national marine researchers and industry partners. Additionally, the deep-water access would expand UNE's ability to serve as a collaboration hub for coastal marine and deep-water science and industry. As good stewards of the environment and our coastal neighbors, UNE is committed to ensuring that the planned structure fully adheres to local, state, and federal regulations.

Investment in UNE's marine programs is good for Maine taxpayers. With the Gulf of Maine warming faster than almost any other body of water on the planet, marine research

afforded by year-round access to the water will allow UNE to gather critical data to guide Maine's response to climate change. These expanded research opportunities will likewise enhance UNE's ability to ensure that its students graduate with the curiosity and experience to both ask and answer the important questions that will inform to the data-driven decisions impacting the expanding fields of aquaculture, fisheries, marine law and policy, marine business and entrepreneurship, ocean food systems, and related fields.

In order to determine the optimum location for the pier, an extensive alternatives analysis and studies were undertaken. This was not only for due diligence, but was required by the state and federal regulators. The regulators concluded that this exhaustive analysis was satisfactory to establish the proposed pier location. A copy of the alternatives analysis is included as Attachment 8.

The proposed facility includes the following:

1. A pile supported pier structure extending from shore into the Saco River. The proposed pier includes an approximately 130-foot long approach section extending from shore and an 80-foot long pier head section oriented roughly parallel to the direction of flow in the river. The pier consists of a concrete superstructure on steel pipe piles, with timber fender piles for vessel berthing and floating docks, and a pile supported gangway lifting beam to allow the gangway ramp to be temporarily removed from the water.
2. A floating dock system consisting of one 8-foot by 24-foot float, one 8-foot by 26-foot 10-inch float, and one 12-foot by 30-foot gangway landing float to provide all-tide vessel access for UNE's vessels on the west side of the pier, and a single 6-foot by 20-foot floating dock to provide a tie-up location for the City of Biddeford Fire Boat on the east side of the pier.
3. An 80-foot by 5-foot gangway to provide ADA compliant access to the float system.
4. An upland access road connecting the existing road at the MSC to the proposed pier, including associated site grading, drainage, and stormwater management features.

The proposed activities are described in detail in the following sections.

Pier Structure

The proposed vehicle rated pier is supported by twenty-five concrete filled steel pipe piles and a concrete abutment which connects the pier to the proposed access road. All of the piles are located beyond the Highest Annual Tide (HAT) line, while the abutment is located shoreward of the HAT line. Fourteen, 24-inch diameter steel piles support the pier head portion of the structure and eleven, 16-inch diameter steel piles support the pier approach. The seven piles at the first three pile bents at the pier approach will be socketed to ledge due to a limited soil layer above the ledge surface at these locations. The remaining piles will be driven to ledge but do not require socketing given the sufficient

depth of overburden soils. The piles support precast concrete pile caps which support precast concrete deck planks that form the pier deck surface.

The pier includes thirty, 12-inch diameter timber fender piles to provide for vessel berthing at the main face of the pier and to restrain the floating dock system. All new fender piles will be untreated timber, greenheart species. A gangway lifting beam is proposed to lift the gangway out of the water during float maintenance or in advance of severe weather. The lifting beam is supported by a steel column anchored to the pier on one side and a 10.75-inch diameter concrete filled steel pipe pile on the other.

Floating Dock System

The proposed floating dock system includes four floating docks. The three timber floats on the west side of the pier are new, while the single float on the east side of the pier is an existing float that will be relocated from UNE's facility that is located upstream of the proposed pier (note that this facility is proposed to be demolished). The new floats consist of an 8-foot by 24-foot float, an 8-foot by 26-foot 10-inch angled float, and a 12-foot by 30-foot gangway landing float. All new floats will be located on the west side of the pier approach at the south side of the pier head. The existing float is 6-feet by 20-feet and will be located on the east side of the pier approach at the south side of the pier head to provide a tie-up location for the City of Biddeford Fire Boat. The new floats are accessed by the proposed gangway or a fixed ladder, and the fireboat float is accessed solely by a fixed ladder. All the floating docks are located beyond the MLLW line and will be restrained and guided by the timber fender piles. The floats will allow vessels to tie up to the pier at any time during the tide cycle. The depths of water at the floats are adequate to meet UNE's needs.

Gangway

The 80-foot by 5-foot gangway provides ADA compliant access to the new floating dock system on the west side of the pier. The gangway connects to the pier near the beginning of the pier approach and lands on the 12-foot by 30-foot floating dock. The total indirect impact from the gangway is 357 square feet (this area excludes the portion of the gangway located above the floating dock).

Pier Building

One pier building, an 8 ft x 10 ft shed, is proposed to be located at the southeast corner of the pier head. This structure will provide storage for small equipment used by MSC staff, as well as an indoor protected location to house certain utility features such as electrical service panels.

Access Drive

Vehicular and pedestrian access to the pier will be provided by a new 20 ft wide access road that will extend from the existing GMSC access road and parking area, around the east side of the GMSC building, and to the end of the pier approach. A turnaround area is

provided adjacent to the pier approach to allow for vehicles up to and including fire trucks accessing the pier to turn around and drive forward to exit the access road. There is no parking proposed adjacent to the pier. All vehicles will use the existing parking spaces adjacent to the GMSC building. The new road will provide construction access for the project, which will help to limit the amount of work performed from the water and allow more staging to be achieved from land. The upland work will include stormwater management features that have been designed to meet Maine DEP Chapter 500 standards.

The following addresses Site Plan Approval/ Site Design Criteria and Shoreland Zoning Land Use standards for piers.

Site Plan Approval/Site Design Criteria

1. **Drainage**

   A Stormwater Management Report is attached. The report submitted demonstrates compliance with Maine Department of Environmental Protection (DEP) Basic and General standards. The project will include bioretention filters designed to DEP BMP standards for enhancement of stormwater runoff quality.

   A waiver of Article XI.II.Section 5.B.1. is required for an increase in the rate of runoff. This waiver has historically been granted by the planning board for projects located on the UNE parcel that are directly tributary to tidal receiving waters, which will be the case for this project. There will be no impact on the capacity of a receiving downgradient storm system. The bioretention filters will provide stormwater quality enhancement and cooling of runoff, as well as a level of stormwater detention. Level spreaders will be utilized to evenly distribute runoff from the bioretention filters into sheet flow. Although an increase in the rate of runoff is shown at two point locations on the drainage plans, the reality is that the stormwater runoff from the subcatchments is distributed over a wide area. Note that the peer review engineer supports this waiver.

2. **Utilities**

   Power will be fed underground to the pier from the Girard Marine Science Center.

3. **Parking**

   There will be no formal dedicated parking associated with the project.

4. **Structural Layout and Design**

a) Design of Buildings

An 8 ft x 10 ft shed is proposed on the pier. A photo in attachment 12 shows a rendering of the shed; a wood frame structure, with weather resistant siding, and a metal roof.

b) Setbacks

The research pier is sited in conformance with all setback requirements.

c) Fire Protection & Safety

Based on input from the fire department, the road width was increased to 20 ft per NFPA standards. The turnaround meets the city required dimensional standards and has been modelled to accommodate fire apparatus.

d) Landscaping

The revegetation plan has been developed to meet the City of Biddeford's Shoreland Zoning requirements as well as to preserve a visual buffer for the access drive to minimize visibility from the water to the greatest extent possible, while achieving the required clearing and considering functional requirements such as snow plowing at the turnaround. The revegetation plan also meets requirements of the Saco River Corridor Commission (SRCC) who has issued a permit for the project.

Revegetation Plan

The revegetation plan, drawing C-15, is intended to meet the city of Biddeford's shoreland zoning requirements. Details are as follows:

- 49 trees are being removed with 21 of those within the 50-foot HAT setback
- Approximately 5,850 SF of understory duff later and low growth vegetation (predominantly non-native invasive honeysuckle) is being disturbed within 50 feet of the HAT.
- 5 tree species are proposed in approximate equal quantities with the evergreen trees located between the road shoulder grading and the top of embankment where they are anticipated to fit under the remaining mature forest canopy, and between existing trees and ledge. Field verification during construction will be required to ensure final plant locations are feasible if shallow ledge or significant remaining tree root stock is present.
- 3 shrubs (2 evergreen and 1 deciduous) are proposed to plant at the toe of the road embankment as well as in areas around the turnaround where fitting larger trees will be challenging given limited space and the need to maintain an area for plowed snow.
- Deciduous trees are spread throughout the area.

- The bioretention cells will be filled with a mix of wet, drought and salt tolerant shrubs and perennials which are shown on the plan as a hatched area. The notes on the plan and drawing C-16 plant schedule describe the random pattern mixing of these plants throughout the bio retention cells.
- All other disturbed areas will be planted with a native roadside mix of perennial grasses and flowers. It is recommended that this area be mowed once a year in the fall to maintain the mix of plants. If mowed more often, it will revert to mostly lawn grasses.
- Mature plant sizes are listed on the plant list to give a sense of the amount of screening that may occur over time.

e) Service, Storage, and Utility Areas

Not applicable

f) Paving, Parking, and Storage Areas

No paving, parking, or storage is located within the side or rear setback of the property, nor within the front setback of the property.

g) Handicapped Accessibility

The pier is designed to meet ADA requirements.

h) Loading Facilities

Not applicable.

i) Parking, Loading, and Protective Buffers

The non-vegetated area of the land being developed will be less than 75% and a minimum of 25% of the land area being developed either remains in its natural state or consists of landscape and lawn areas.

j) Open Space

Not applicable.

k) External Lighting

An electrical site plan is included in the drawing set which shows the site lighting. Full cut off fixtures will be utilized and lighting will be the minimum necessary for safety and functionality.

l) Signs

Not applicable.

m) Historic and Archeological Resources.

See attachment 10 for a letter from the Maine Historic Preservation Commission clearing the project.

Shoreland Zoning Land Use Standards

The project will comply with the applicable standards of Article XIV. Section 15.C.

- Access from shore will be developed on soils appropriate for the use. A detailed erosion control plan has been prepared for the project.
- The location does not interfere with existing beach areas.
- The facility has been located to minimize adverse effects on fisheries. The plan was reviewed be the National Marine Fisheries Service.
- The facility size is the minimum necessary to carry out current and future research activities, and is consistent with the surrounding character and uses of the area, including the Camp Ellis pier on the opposite side of the river.
- An 8 ft x 10 ft shed for storage of life jackets, tools, research equipment is proposed on the pier, and is an operational necessity. The shed will not exceed 20 ft in height.

Waivers:

Four waivers are requested:

- Article XI. II. Section 5.B.1.a. – The rate of post development runoff shall not exceed that of pre-development. As noted in the cover letter for the previous submission, this waiver has historically been granted by the planning board for projects located on the UNE parcel that are directly tributary to tidal receiving waters, which will be the case for this project. There will be no impact on the capacity of a receiving downgradient storm system. The bioretention filters will provide stormwater quality enhancement and cooling of runoff, as well as a level of stormwater detention. Level spreaders will be utilized to evenly distribute runoff from the bioretention filters into sheet flow. Although an increase in the rate of runoff is shown at two point locations on the drainage plans, the reality is that the stormwater runoff from the subcatchments is distributed over a wide area.

  Note that the peer review engineer has indicated support for this waiver.

- Article XI.II. Section 5.B.1.e.3. - No slope shall be created which results in a slope of more than two feet horizontal to one foot vertical unless proper retaining walls are proposed. The design includes slopes which exceed this standard in ledge (1/4H:1V) and along the drive (1H:1V). This waiver has been requested by UNE and granted by the planning board for all projects proposed by UNE on the campus due to the presence of ledge and the desire to

minimize impacts of construction on adjacent areas. Based on our experience the ledge in the area is stable at steeper slopes. Turf reinforcement matting specifically designed to stabilize steeper slopes will be utilized along the drive sideslopes.

- Article VI. Section 26.F. - No cut or fill slopes that exceed 3 horizontal to 1 vertical. See above for justification.

- Article XIV. Section 15.H.4. Road and driveway banks shall be no steeper than a slope of two horizontal to one vertical, and shall be graded and stabilized in accordance with the provisions for erosion and sedimentation control contained in Section 15T. See above for justification for steeper slopes. The erosion control specified for the project exceeds the standards of Section 15T.

We are in hopes the planning board will find that the proposal is consistent with city regulations and approval standards. We look forward to meeting with the planning board on June 18.

If you have any questions or comments, please contact me.

Sincerely,
Site Design Associates

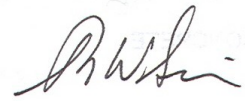

Tom Saucier, P.E.
President

cc: Alan Thibeault, UNE, Vice President for University Operations

Attachment A
Letter responding to May 13, 2025 staff comments

Site Design Associates
Consulting Engineering and Land Planning

June 9, 2025

David C.M. Galbraith, City Planner
City of Biddeford
P.O. Box 586
205 Main Street
Biddeford, ME 04005

RE: University of New England
Proposed Research Pier

Dear David and Planning Board Members:

On behalf of University of New England (UNE), Site Design Associates (SDA) is pleased to submit this response to staff and peer review comments dated May 13, 2025. The comments are included below in italics, with our responses.

A. Staff Review Comments

Comment: *The Preliminary Application shall include copies of the required notification letters provided to the various Native American Tribes listed above in Section 3*

Response: **The letters to the tribes, the plan included with the letters, the certified mail receipts, and the two responses received are attached at the end of this letter. This information was included in the DEP NRPA, ACOE and Harbor Master applications previously submitted to the city. In all cases the information was deemed complete and the DEP and ACOE permits issued.**

Note that the plan that was included with the letters reflected the pier in the currently proposed location. The purpose of the request for tribal review is to give them the opportunity to review the location of proposed projects to verify whether the proposed development would affect known properties of religious and/or cultural significance. It is not intended to seek approval of any design.

Comment: *Limited information was provided by the Applicant on the checklist. Applicant should fully complete the checklist for the next submission, including column D (list drawing sheet number where information is provided) and* column E (reason not provided/comment).

23 Whitney Way – Topsham, Maine 04086
Phone: (207) 449-4275 email: info@sitedesignassociates.biz

Response:

An updated copy of the checklist is provided with this submission.

Comment:

Section 74-35 Construction of Wharf, Pier, or Landing Regulated states that new piers require permission from the Harbormaster

Response:

Refer to the attached letter addressing the Planning Board Members comments.

Comment:

Section 74-36 Floats requires permission from the Harbormaster for floats that are an integral part of a pier.

Response:

Section 74-36 is not applicable to this project. Section 74-36 addresses floats that are *not* an integral part of a pier.

Comment:

The application lists two (2) project waivers being sought. The application didn't include a narrative or rational for Staff or the Board to evaluate the requested waivers. This information shall be included in the Preliminary application package.

Response:

Four waivers are requested:

- **Article XI. II. Section 5.B.1.a. – The rate of post development runoff shall not exceed that of pre-development. As noted in the cover letter for the previous submission, this waiver has historically been granted by the planning board for projects located on the UNE parcel that are directly tributary to tidal receiving waters, which will be the case for this project. There will be no impact on the capacity of a receiving downgradient storm system. The bioretention filters will provide stormwater quality enhancement and cooling of runoff, as well as a level of stormwater detention. Level spreaders will be utilized to evenly distribute runoff from the bioretention filters into sheet flow. Although an increase in the rate of runoff is shown at two point locations on the drainage plans, the reality is that the stormwater runoff from the subcatchments is distributed over a wide area.**

  Note that the peer review engineer has indicated support for this waiver.

- **Article XI.II. Section 5.B.1.e.3. - No slope shall be created which**

results in a slope of more than two feet horizontal to one foot vertical unless proper retaining walls are proposed. The design includes slopes which exceed this standard in ledge (1/4H:1V) and along the drive (1H:1V). This waiver has been requested by UNE and granted by the planning board for all projects proposed by UNE on the campus due to the presence of ledge and the desire to minimize impacts of construction on adjacent areas. Based on our experience the ledge in the area is stable at steeper slopes. Turf reinforcement matting and geosynthetic reinforcement specifically designed to stabilize steeper slopes will be utilized along the drive sideslopes.

- **Article VI. Section 26.F. - No cut or fill slopes that exceed 3 horizontal to 1 vertical. See above for justification.**

- **Article XIV. Section 15.H.4. Road and driveway banks shall be no steeper than a slope of two horizontal to one vertical, and shall be graded and stabilized in accordance with the provisions for erosion and sedimentation control contained in Section 15T. See above for justification for steeper slopes. The erosion control specified for the project exceeds the standards of Section 15T.**

B. Peer Review Comments

Comment:

The Fire Department has expressed that the length of the turnaround does not meet their needs of a 70- foot-long turnaround at the end of the access road. The provided turnaround is approximately 40 feet long.

Response:

We analyzed the turning movements of the aerial apparatus and the results were provided to E. Dexter, Ass. Chief BFD for review. The results demonstrate there is adequate space for the aerial apparatus to maneuver. Additionally, we have adjusted the location of the security gate on the pier to provide additional space for turning maneuvers. We have enclosed an updated Vehicle Circulation Exhibit to convey the safe turn around of an emergency vehicle, at the end of this letter.

E. Dexter has indicated the design could be approved with a condition of approval that both Truck 32 and SH-34 are able to maneuver the turnaround post construction, and prior to final sign off they should be taken to the location for testing.

Mandating a turnaround larger than that shown would result in more clearing of trees and more impervious surface in the shoreland zone adjacent to the river, neither of which would be looked at favorably by the regulators if an alternative exists. The regulators had asked whether a narrower drive could be provided and we indicated that NFPA rules require 20 ft of width.

Comment:

Access road width has been increased to 20 feet, as requested by the Fire Department.

Response:

Acknowledged.

Comment:

Additional coordination items for the City are indicated within the Review Comments below in red font.

Response:

Acknowledged.

Comment:

Section 74-35 Construction of Wharf, Pier, or Landing Regulated states that new piers require permission from the Harbormaster.

Response:

Refer to response above.

Comment:

Section 74-36 Floats requires permission from the Harbormaster for floats that are an integral part of a pier.

Response:

Refer to response above.

Comment:

What erosion and sedimentation controls will be utilized for the construction of the pier abutment and pier? A turbidity curtain detail is included and assumed to be used for the pier but the location of this is not shown in plan view.

Response:

Turbidity from the project is anticipated to be limited and temporal associated with the installation of piles for the pier. Neither the State or Federal permits require the use of a turbidity curtain. The turbidity curtain detail has been removed from the plans. Areas of upland soil disturbance will utilize erosion

control BMP's as identified in the Erosion Control Notes and Details on sheets C-012, C-013, and C-014.

Comment:

A stabilized construction entrance, silt fence, biodegradable stabilization matting, and plunge pool are proposed for the construction of the proposed access road.

Response:

Acknowledged.

Comment:

A revegetation plan has been submitted showing tree, shrub, and perennial plantings within the shoreland zone and upland areas. The plan has been reviewed and approved by the Saco River Corridor Commission.

Response:

Acknowledged.

Comment:

The Inspection and Maintenance Plan of Stormwater Management Facilities includes a recertification requirement, which includes a five-year recertification to Maine DEP. This reference should be removed, since there is no DEP Stormwater Permit.

Response:

We have removed the language regarding the recertification to Maine DEP from the Inspection and Maintenance Plan.

Comment:

See Land Development Regulations, Article XI Site Plan Review, comments 1-5 below. A waiver of Section 61.A.12 will also be required.

Response:

We are unclear regarding the referenced section, since there is no section 61 in Article XI. If the intent was to reference Article VI, section 61.A.1-2 we do not believe a waiver is required. All new construction and development, is designed to reflect or resemble, as nearly as possible, natural runoff conditions in terms of volume, velocity and location of runoff. As noted previously, the rate of runoff after development will slightly exceed predevelopment runoff conditions, and the impact was evaluated in terms of potential soil erosion and sedimentation, drainage capacity, and the land use/land cover characteristics. The impact was determined to be minimal; therefore, a waiver of Article XI.

II. Section 5.B.1.a. was requested, which is supported by the peer review engineer.

Comment:

Subsection A states that any project involving parcels of land of greater than five acres, or any portion of a larger parcel greater than five acres, shall be required to conduct a wildlife study by a certified wildlife biologist. This provision may be waived, if a letter from the Maine Department of Inland Fisheries and Wildlife (MDIFW) indicates there are no significant habitat areas involved in the project area or abutting adjacent land. The Maine DEP Natural Resource Protection Act (NRPA) permit states that "according to the Department s Geologic Information System (GIS) database there are no mapped Essential or Significant Wildlife Habitats at the site. The Maine Department of Inland Fisheries and Wildlife (MDIFW) reviewed the proposed project and stated that the project is located adjacent to but outside of Tidal Waterfowl and Wading Bird Habitat (TWWH), a designated significant wildlife habitat. MDIFW stated that minimal impacts to piping plover and Blanding's turtle habitat are anticipated and provided general recommendations including minimizing vegetation removal and soil disturbance, and that time spent in the water should be minimized to the greatest extent practicable." Given the supporting information in the NRPA permit, we believe this requirement is met.

Response:

Acknowledged.

Comment:

The applicant has requested a waiver of Article XI.II Section 5.B.1 to allow a small increase in peak stormwater runoff rates. The applicant has stated they are requesting this waiver since stormwater discharges directly to a tidal receiving water and there will be no impact on a downgradient storm system. Since there's only a small increase in peak runoff rate and Chapter 500 does allow for a waiver of this requirement for sites discharging to coastal wetlands/rivers, we recommend granting this waiver.

Response:

Acknowledged.

Comment:

Bioretention systems are proposed to provide stormwater treatment. 76% of the new impervious area and 72% of the new developed area are treated, which meets the Maine DEP General Standard water quality treatment requirements for linear developments.

Response:

Acknowledged.

Comment:

The Grading and Drainage Plan and HydroCAD model refers to the stormwater treatment practices as Bioretention Filter Cells; however, the details for stormwater practices refer to them as Grassed Underdrained Soil Filters. All notations should be updated to be consistent between plan, details, and model.

Response:

We have revised the plans, details, and hydrology model for consistency. Moving forward, these BMPs will be referred to as Bioretention Filter Cells.

Comment:

A detail should be included in the plans for the 3' diameter catch basin with beehive grate.

Response:

We have revised the plans to include the details mentioned above. The Bioretention Filter Cell detail has been revised to call out an ADS Nyloplast Drain Basin (See Sheet C-103) and the ADS Nyloplast 18" Drain Basin W/Beehive Grate Detail can be found on Sheet C-014.

Comment:

The 3' diameter catch basins are modeled with 18" horizontal orifices (beehive grates). The Grassed Underdrained Soil Filter detail and Granding and Drainage Plan show the beehive grate as the entire catch basin diameter. Please clarify what size the grate is and update the plans and model as needed.

Response:

See response above.

Comment:

The applicant has requested a waiver of Article XI.II Section 5.B.1.e.3 to allow for slopes steeper than 2:1 because of ledge. 1:1 vegetated reinforced slopes are proposed where there is no ledge and 1:10 max slopes are proposed where there is ledge.

Has the ledge cut been reviewed by a geotechnical engineer for stability?

Additional information about the vegetated reinforced slopes is

needed. A 1:1 slope is steep and difficult to vegetate, even with matting. The slope detail on C-013 shows horizontal lines into the slope that are not labeled. Are these additional stabilization measures?

Article XIV, 15.H.4 also prohibits road and driveway banks to be steeper than 2:1, and a waiver would be needed based on the proposed slopes.

Response:

The proposed ledge cuts reflect the same conditions used along the existing access road to the Marine Science Center which has been in place and stable for over 20 years. Conditions will be reviewed in the field by a geotechnical engineer and any loose material will be removed to result in a stable finished slope which may be between 1:1 and 1:10 depending on the conditions encountered.

The slope protection has been specified as a turf reinforcement mat, suitable for stabilization of the slopes shown. Additionally, geosynthetic reinforcement will be incorporated into the reinforced slope to provide stability. Details will be incorporated into the final construction plans for the project.

A waiver of article XIV. Section 15.H.4. has been requested. See previous discussion.

Comment:

North arrow provided on C-006 is incorrect and should be reoriented.

Response:

We have revised the north arrow on Sheet C-006 to properly show the orientation of the drawing.

Comment:

Proposed spot grades along access road do not match proposed contours or vertical profile. For example, see Sta. 4+00. All proposed elevations should correlate between plan view, profile view, cross sections.

Response:

We have revised the plans, profiles, and cross-sections to properly correlate between the sheets.

Comment:

Typical Section provided on sheet C-008 shows the 1:1 embankment starting behind the proposed guardrail. However, Plan View (C-006/007) shows the 1:1 embankment starting in front of the guardrail. The typical section and

plan view should correlate. Additionally, an adequate guardrail "shelf" should be provided behind the guardrail posts for support.

Response:

Plans have been revised such that the guardrail is within the shelf that is above the 1:1 reinforced slope.

Comment:

Vertical curve data is only partially shown in the access road profile (C-006/007). Adjust viewports so all data is legible.

Response:

Plan sheets have been corrected to show all vertical curve data.

Comment:

Proposed pipes missing from access road profile (C-006/007) and storm drain callouts/leader lines pointing to incorrect location. Clarify where storm drain pipes are in profile.

Response:

We have revised the viewports in Sheets C-006 and C-007 to properly show storm drain pipes in the access road profiles.

Comment:

Article XIV, 15.H.1 requires roads and driveways within the shoreland zone to be set back at least 100 feet, horizontal distance, from the normal high-water line of a great pond classified GPA or a river that flows to a great pond classified GPA, and 75 feet, horizontal distance, from the normal high-water line of other water bodies, tributary steams, or the upland edge of a wetland unless no reasonable alternative exists as determined by the Planning Board. However, Section 15.H.1 does not apply to roads or driveways that provide access permitted structures and facilities located nearer to the shoreline due to operational necessity. Since the pier is a permanent structure with operational necessity to the shoreline and the access road is providing access to the pier, we believe the proposed access road is allowed by the Ordinance.

Response:

Acknowledged.

Comment:

The pier is proposed in the Institutional (IN) zone and Limited Residential (LR) shoreland zoning overlay district. An 8'x10' shed is also proposed on the pier to store life jackets, tools, and research equipment and is stated to be an operational necessity. Although the Shoreland Zoning Ordinance does not allow structures within 75' of the normal high-water line in the Limited Residential overlay district, the setbacks do not apply to structures that are

an operational necessity for direct water access. Based on the information provided, we believe the proposed structure is allowed by the Ordinance.

Response:

Acknowledged.

Comment:

The cover letter for the application indicates the plan was reviewed by the National Marine Fisheries Service. Have review comments from the National Marine Fisheries Service been provided to the City?

Response:

The Army Corps of Engineers requests comments and input from NMFS as a component of their review. The comments we received were verbal during a Teams meeting with NMFS and the ACOE on February 5, 2025. The meeting was held to discuss whether construction activity and/or the project would be likely to affect Atlantic Sturgeon, and how to best go about making that determination. The final determination made as a result of that meeting was that the project was not likely to adversely affect Atlantic Sturgeon, and the ACOE permit was issued.

Comment:

A submerged lands lease or easement is required for structures, such as piers, located on publicly-owned submerged lands. Has a submerged lands lease or easement been secured for the project through the Maine Department of Agriculture, Conservation & Forestry, Bureau of Parks and Lands.

Response:

We will be requesting that the planning board condition any approval on receiving a submerged lands lease from the Submerged Lands Program.

Comment:

Applicant should provide comments about how the pier and shed comply with Article XII Floodplain Management Ordinance requirements and specifically Section R, Coastal Floodplains. Please be sure to include how pier, shed, and utility elevation were selected and if sea level rise was considered.

Response:

It is not clear to us that the Floodplain Management Ordinance is applicable to the pier and floats. From the code: The City of Biddeford has chosen to become a participating community in the National Flood Insurance Program and agreed to comply with the

requirements of the National Flood Insurance Act of 1968, through the establishment of its Floodplain Management Ordinance. The National Flood Insurance Act of 1968, which established the National Flood Insurance Program (NFIP), primarily focuses on insuring improved real property or mobile homes located within designated Special Flood Hazard Areas (SFHA). Essentially, the program covers structures that are walled and roofed, principally above ground, and affixed to a permanent site. This includes residential, industrial, commercial, and agricultural buildings. Piers and floats, specifically those used for "boat-related purposes", are generally not covered under the NFIP standard flood insurance policy.

In regards to compliance with section R, Coastal Floodplains:

- **The bottom of all electrical work and permanent fixtures and components, will be elevated to at least one foot above the base flood elevation.**
- **The bottom of the shed will be 4 feet above the base flood elevation.**
- **The project was designed by a professional engineer.**

Regarding sea level rise, GEI conducted a flood risk analysis to assess the potential exposure of the pier to floodwaters in current conditions and under various scenarios of Sea Level Rise that may potentially occur throughout the structure life. For the analysis, GEI utilized the scenarios put forth by the Maine Climate Council (MCC) in their 2020 report "Maine Won't Wait: A Four-Year Plan for Climate Action." The MCC recommends consideration of sea level rise based on two separate scenarios:

- **Commit to Manage Scenario – This reflects the "intermediate" sea level rise curve from the 2017 NOAA model, with a relative sea level rise of 3.9 feet in 2100 (relative to 2000 mean sea level)**
- **Prepare to Manage – This reflects the "high" sea level rise curve from the 2017 NOAA model, with a relative sea level rise of 8.8 feet in 2100 (relative to 2000 mean sea level)**

Sea level rise curves published in the referenced MCC report are shown below for reference:

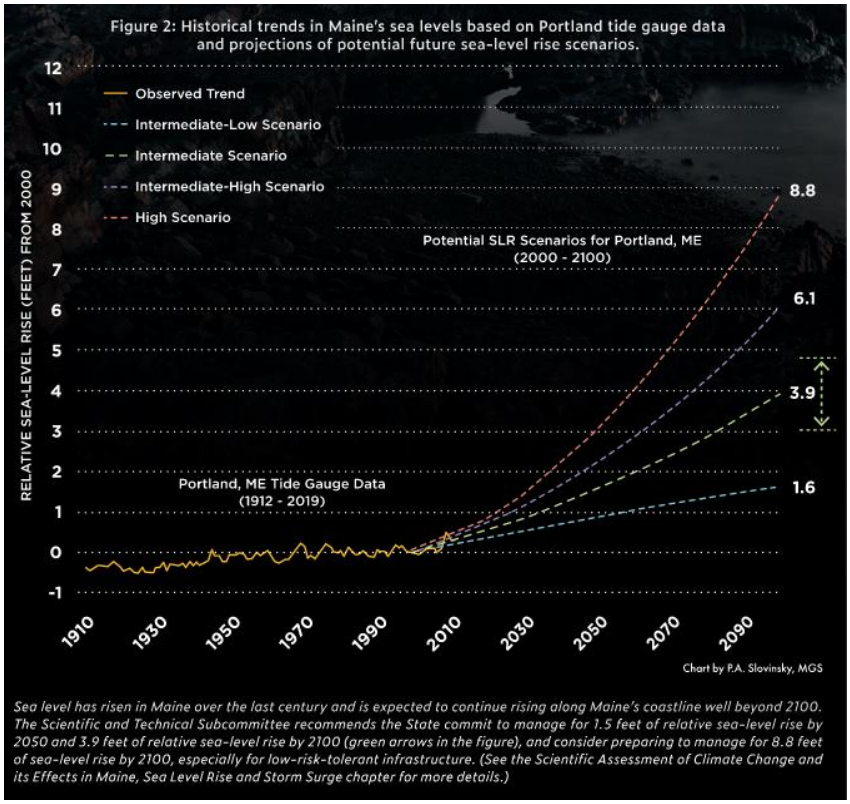

GEI uses these scenarios to project future water elevations throughout the tidal range and in flood/storm events, throughout the design life of the structure, and compares those elevations to the proposed elevations of various assets to assess the level of risk from exposure to floodwaters.

The design life for the pier is assumed to be approximately 75 years, so the end of life would be approximately 2100. GEI has designed the structure for uplift and lateral loading assuming water elevations associated with the storm surge and wave action during 100-year recurrence interval coastal storm events under the Commit to Manage scenario. This reflects an appropriate design condition that reasonably balances structure risk throughout the design life, project functionality, adjacent site impacts, and project cost. The pier is designed to accommodate conditions through the end of life under the Commit to Manage scenario (3.9 feet of SLR).

Comment:

The cover letter for the application indicates the plan was reviewed by the National Marine Fisheries Service. Have review comments from the National Marine Fisheries Service been provided to the City?

Response:

The Army Corps of Engineers requests comments and input from NMFS as a component of their review. The comments we received were verbal during a Teams meeting with NMFS and the ACOE on February 5, 2025. The meeting was held to discuss whether construction activity and/or the project would be likely to affect Atlantic Sturgeon, and how to best go about making that determination. The final determination made as a result of that meeting was that the project was not likely to adversely affect Atlantic Sturgeon, and ACOE issued their permit.

Comment:

Article XIV, 15.H.1 requires roads and driveways within the shoreland zone to be set back at least 100 feet, horizontal distance, from the normal high-water line of a great pond classified GPA or a river that flows to a great pond classified GPA, and 75 feet, horizontal distance, from the normal high-water line of other water bodies, tributary steams, or the upland edge of a wetland unless no reasonable alternative exists as determined by the Planning Board. However, Section 15.H.1 does not apply to roads or driveways that provide access to permitted structures and facilities located nearer to the shoreline due to operational necessity. Since the pier is a permanent structure with operational necessity to the shoreline and the access road is providing access to the pier, we believe the proposed access road is allowed by the Ordinance.

Response:

Acknowledged.

Comment:

The pier is proposed in the Institutional (IN) zone and Limited Residential (LR) shoreland zoning overlay district. An 8'x10' shed is also proposed on the pier to store life jackets, tools, and research equipment and is stated to
be an operational necessity. Although the Shoreland Zoning Ordinance does not allow structures within 75' of the normal high-water line in the Limited Residential overlay district, the setbacks do not apply to structures that are an operational necessity for direct water access. Based on the information provided, we believe the proposed structure is allowed by the Ordinance.

Response:

Acknowledged.

Comment:

A submerged lands lease or easement is required for structures, such as piers, located on publicly-owned submerged lands. Has a submerged lands lease or easement been secured for the project through the Maine Department of Agriculture, Conservation & Forestry, Bureau of Parks and Lands?

Response:

We will be requesting that the planning board condition any approval on receiving a submerged lands lease from the Submerged Lands Program.

In closing, we note that based on the city staff report dated May 13, 2025 staff found the application satisfies the City's Shoreland Zoning Ordinance and Site Plan criteria.

We believe that City Staff and Planning Board will also find that the project conforms to the UNE Institutional Zone Master Plan submission, with regards to the project location, design, and applicable standards. We believe we have satisfactorily addressed staff comments. If you have any additional questions or comments, or require additional information, please do not hesitate to contact Alan Thibeault, (602-2253) or me (449-4275).

We look forward to meeting with the Planning Board on June 18 to further discuss this project.

Sincerely,
Site Design Associates

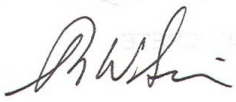

Tom Saucier, P.E.
President

cc: Alan Thibeault, UNE, Vice President for University Operations

Site Design Associates
Consulting Engineering and Land Planning

April 10, 2023

THPO and Environmental Planner
Houlton Band of Maliseet Indians
88 Bell Road
Littleton, Maine 04730

RE: Proposed Marine Science Center Pier
11 Hills Beach Road
Biddeford, Maine

On behalf of our client, University of New England (UNE), we are assisting with the preparation of Maine Department of Environmental Protection Natural Resources Protection Act and U.S. Army Corps of Engineers Permit applications. The applications are for the installation of a permanent pier and float system on UNE's campus at 11 Hills Beach Road in Biddeford.

This letter and the enclosed materials serve as a means to notify you of the project and give you an opportunity to determine whether the proposed development would affect properties of religious and/or cultural significance. If the Tribe has concerns in this area, please notify us by letter to the address below, contact me at 207-449-4275 or via email at tsaucier@sitedesignassociates.biz.

Thank you for your assistance and the generosity of your time to review this project in reference to the Tribe's concerns.

Sincerely,

Site Design Associates

Tom Saucier, P.E.
President

Enclosures

23 Whitney Way Topsham, Maine 04086
Phone: (207) 449-4275 email: info@sitedesignassociates.biz

Site Design Associates
Consulting Engineering and Land Planning

April 10, 2023

THPO
Aroostook Band of Micmacs
7 Northern Road
Presque Isle, ME 04769

RE: Proposed Marine Science Center Pier
11 Hills Beach Road
Biddeford, Maine

On behalf of our client, University of New England (UNE), we are assisting with the preparation of Maine Department of Environmental Protection Natural Resources Protection Act and U.S. Army Corps of Engineers Permit applications. The applications are for the installation of a permanent pier and float system on UNE's campus at 11 Hills Beach Road in Biddeford.

This letter and the enclosed materials serve as a means to notify you of the project and give you an opportunity to determine whether the proposed development would affect properties of religious and/or cultural significance. If the Tribe has concerns in this area, please notify us by letter to the address below, contact me at 207-449-4275 or via email at tsaucier@sitedesignassociates.biz.

Thank you for your assistance and the generosity of your time to review this project in reference to the Tribe's concerns.

Sincerely,

Site Design Associates

Tom Saucier, P.E.
President

Enclosures

23 Whitney Way Topsham, Maine 04086
Phone: (207) 449-4275 email: info@sitedesignassociates.biz

Site Design Associates
Consulting Engineering and Land Planning

April 10, 2023

THPO
Passamaquoddy Tribe of Indians
Pleasant Point Reservation
PO Box 343
Perry, Maine 04667

RE: Proposed Marine Science Center Pier
11 Hills Beach Road
Biddeford, Maine

On behalf of our client, University of New England (UNE), we are assisting with the preparation of Maine Department of Environmental Protection Natural Resources Protection Act and U.S. Army Corps of Engineers Permit applications. The applications are for the installation of a permanent pier and float system on UNE's campus at 11 Hills Beach Road in Biddeford.

This letter and the enclosed materials serve as a means to notify you of the project and give you an opportunity to determine whether the proposed development would affect properties of religious and/or cultural significance. If the Tribe has concerns in this area, please notify us by letter to the address below, contact me at 207-449-4275 or via email at tsaucier@sitedesignassociates.biz.

Thank you for your assistance and the generosity of your time to review this project in reference to the Tribe's concerns.

Sincerely,

Site Design Associates

Tom Saucier, P.E.
President

Enclosures

23 Whitney Way Topsham, Maine 04086
Phone: (207) 449-4275 email: info@sitedesignassociates.biz

Site Design Associates
Consulting Engineering and Land Planning

April 10, 2023

THPO
Passamaquoddy Tribe of Indians
Indian Township Reservation
PO Box 301
Princeton, Maine 04668

RE: Proposed Marine Science Center Pier
11 Hills Beach Road
Biddeford, Maine

On behalf of our client, University of New England (UNE), we are assisting with the preparation of Maine Department of Environmental Protection Natural Resources Protection Act and U.S. Army Corps of Engineers Permit applications. The applications are for the installation of a permanent pier and float system on UNE's campus at 11 Hills Beach Road in Biddeford.

This letter and the enclosed materials serve as a means to notify you of the project and give you an opportunity to determine whether the proposed development would affect properties of religious and/or cultural significance. If the Tribe has concerns in this area, please notify us by letter to the address below, contact me at 207-449-4275 or via email at tsaucier@sitedesignassociates.biz.

Thank you for your assistance and the generosity of your time to review this project in reference to the Tribe's concerns.

Sincerely,

Site Design Associates

Tom Saucier, P.E.
President

Enclosures

23 Whitney Way Topsham, Maine 04086
Phone: (207) 449-4275 email: info@sitedesignassociates.biz

Site Design Associates
Consulting Engineering and Land Planning

April 10, 2023

THPO
Penobscot Nation
Cultural and Historic Preservation Dept.
12 Wabanaki Way
Indian Island, Maine 04468

RE: Proposed Marine Science Center Pier
11 Hills Beach Road
Biddeford, Maine

On behalf of our client, University of New England (UNE), we are assisting with the preparation of Maine Department of Environmental Protection Natural Resources Protection Act and U.S. Army Corps of Engineers Permit applications. The applications are for the installation of a permanent pier and float system on UNE's campus at 11 Hills Beach Road in Biddeford.

This letter and the enclosed materials serve as a means to notify you of the project and give you an opportunity to determine whether the proposed development would affect properties of religious and/or cultural significance. If the Tribe has concerns in this area, please notify us by letter to the address below, contact me at 207-449-4275 or via email at tsaucier@sitedesignassociates.biz.

Thank you for your assistance and the generosity of your time to review this project in reference to the Tribe's concerns.

Sincerely,

Site Design Associates

Tom Saucier, P.E.
President

Enclosures

23 Whitney Way Topsham, Maine 04086
Phone: (207) 449-4275 email: info@sitedesignassociates.biz


U.S. Postal Service™
CERTIFIED MAIL® RECEIPT
Domestic Mail Only
For delivery information, visit our website at www.usps.com®.
Perry, ME 04667
OFFICIAL USE
Certified Mail Fee $4.15
$3.35
0086 7
Extra Services & Fees (check box, add fee as appropriate)
Return Receipt (hardcopy) $0.00
Return Receipt (electronic) $0.00
Certified Mail Restricted Delivery $0.00
Adult Signature Required $0.00
Adult Signature Restricted Delivery $
Postage $0.87
Postmark Here
04/11/2023
Total Postag $8.37
THPO
Passamaquoddy Tribe of Indians
Pleasant Point Reservation
PO Box 343
Perry, ME 04667
PS Form 3800, April 2015 PSN 7530-02-000-9047 See Reverse for Instructions
7022 1670 0001 0356 2178

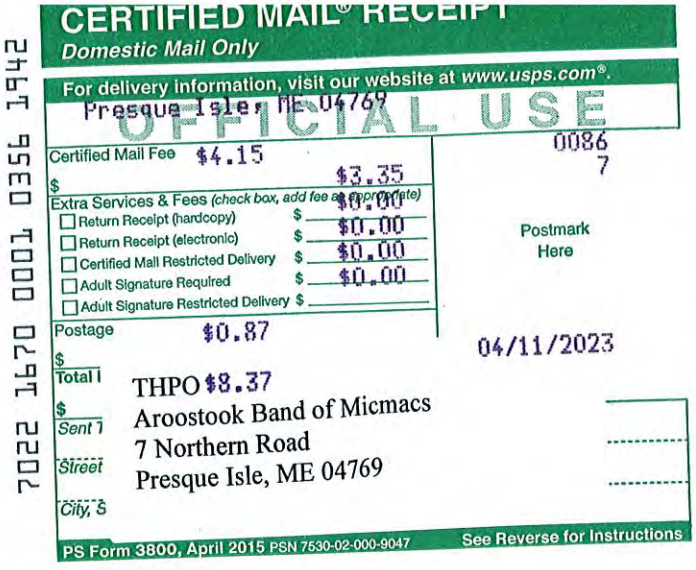
CERTIFIED MAIL® RECEIPT
Domestic Mail Only
For delivery information, visit our website at www.usps.com®.
Presque Isle, ME 04769
OFFICIAL USE
Certified Mail Fee $4.15
$3.35
0086 7
Extra Services & Fees (check box, add fee as appropriate)
Return Receipt (hardcopy) $0.00
Return Receipt (electronic) $0.00
Certified Mail Restricted Delivery $0.00
Adult Signature Required $0.00
Adult Signature Restricted Delivery $
Postage $0.87
Postmark Here
04/11/2023
THPO $8.37
Aroostook Band of Micmacs
7 Northern Road
Presque Isle, ME 04769
PS Form 3800, April 2015 PSN 7530-02-000-9047 See Reverse for Instructions
7022 1670 0001 0356 1942

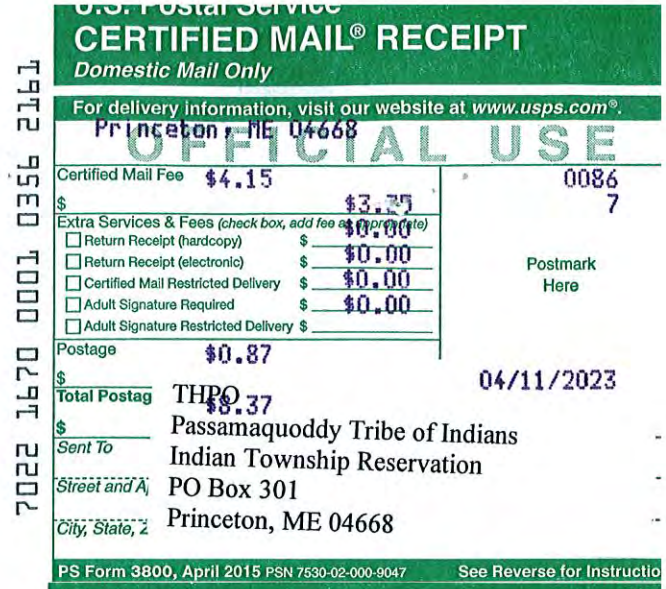
CERTIFIED MAIL® RECEIPT
Domestic Mail Only
For delivery information, visit our website at www.usps.com®.
Princeton, ME 04668
OFFICIAL USE
Certified Mail Fee $4.15
$3.35
0086 7
Extra Services & Fees (check box, add fee as appropriate)
Return Receipt (hardcopy) $0.00
Return Receipt (electronic) $0.00
Certified Mail Restricted Delivery $0.00
Adult Signature Required $0.00
Adult Signature Restricted Delivery $
Postage $0.87
Postmark Here
04/11/2023
THPO $8.37
Passamaquoddy Tribe of Indians
Indian Township Reservation
PO Box 301
Princeton, ME 04668
PS Form 3800, April 2015 PSN 7530-02-000-9047 See Reverse for Instructio
7022 1670 0001 0356 2161

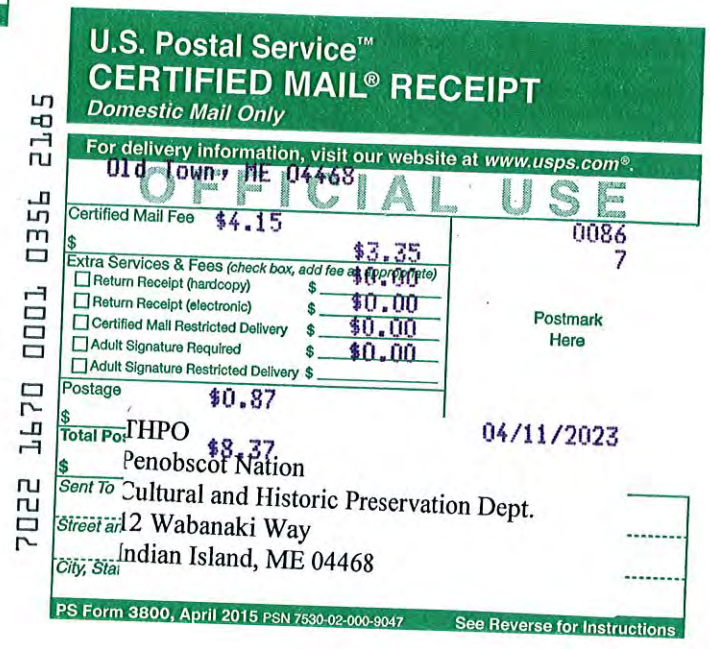
U.S. Postal Service™
CERTIFIED MAIL® RECEIPT
Domestic Mail Only
For delivery information, visit our website at www.usps.com®.
Old Town, ME 04468
OFFICIAL USE
Certified Mail Fee $4.15
$3.35
0086 7
Extra Services & Fees (check box, add fee as appropriate)
Return Receipt (hardcopy) $0.00
Return Receipt (electronic) $0.00
Certified Mail Restricted Delivery $0.00
Adult Signature Required $0.00
Adult Signature Restricted Delivery $
Postage $0.87
Postmark Here
04/11/2023
THPO $8.37
Penobscot Nation
Cultural and Historic Preservation Dept.
12 Wabanaki Way
Indian Island, ME 04468
PS Form 3800, April 2015 PSN 7530-02-000-9047 See Reverse for Instructions
7022 1670 0001 0356 2185

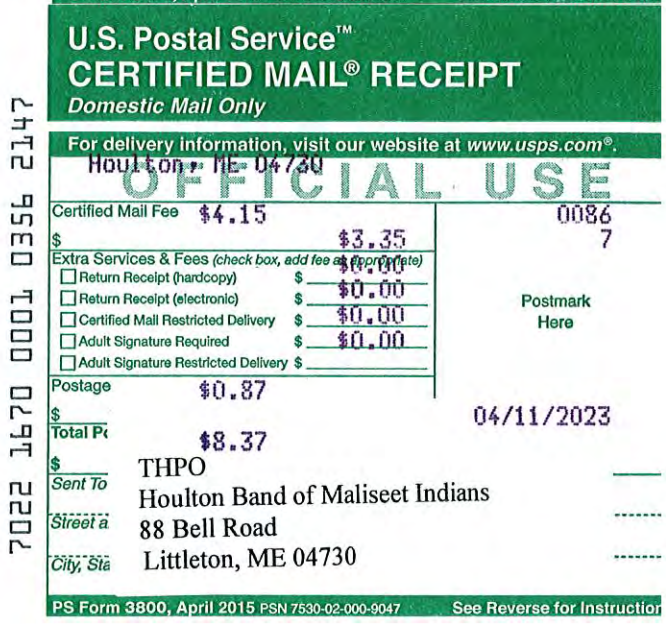
U.S. Postal Service™
CERTIFIED MAIL® RECEIPT
Domestic Mail Only
For delivery information, visit our website at www.usps.com®.
Houlton, ME 04730
OFFICIAL USE
Certified Mail Fee $4.15
$3.35
0086 7
Extra Services & Fees (check box, add fee as appropriate)
Return Receipt (hardcopy) $0.00
Return Receipt (electronic) $0.00
Certified Mail Restricted Delivery $0.00
Adult Signature Required $0.00
Adult Signature Restricted Delivery $
Postage $0.87
Postmark Here
04/11/2023
$8.37
THPO
Houlton Band of Maliseet Indians
88 Bell Road
Littleton, ME 04730
PS Form 3800, April 2015 PSN 7530-02-000-9047 See Reverse for Instruction
7022 1670 0001 0356 2147


SACO
NORWOOD MARINA
CAMP ELLIS TOWN PIER
SACO RIVER
SACO BAY
FEDERAL CHANNEL
JORDAN POINT
PROPOSED PIER
PROPOSED ACCESS ROAD
MARINE SCIENCE CENTER
UNIVERSITY OF NEW ENGLAND CAMPUS
ROUTE 9
NEWTON ROAD
HILLS BEACH ROAD
BIDDEFORD
SEA BREEZE AVE
LONG AVE
HILLS BEACH
HILLS BEACH ROAD
612.6103
355.319°
427.4478
41.8134°
371.7535
298.819°
552.8257
359.4063°
223.4285
62.9328°
223.4801
295.9063°
1130.7745
355.319°
3881.4977
359.4063°
3881.4977
359.4063°
371.5988
342.6475°
669.4197
14.3968°
1954.0347
175.319°
1954.0347
175.319°
1000
175.319°
453.549
162.6475°
685.7071
194.3968°
209.8609
718.819°
254.6578
218.7276°
1027.3684
302.9498°
668.8048
309.1461°
729.1461°
718.5195



SOURCE:
USGS TOPOGRAPHICAL MAP OF BIDDEFORD, MAINE 2022

SITE LOCATION MAP

(NOT TO SCALE)

PENOBSCOT NATION
CULTURAL & HISTORIC PRESERVATION
12 WABANAKI WAY, INDIAN ISLAND, ME 04468

CHRIS SOCKALEXIS – TRIBAL HISTORIC PRESERVATION OFFICER
E-MAIL: chris.sockalexis@penobscotnation.org

NAME	Tom Saucier
ADDRESS	Site Design Associates 23 Whitney Way Topsham, ME 04086
OWNER'S NAME	University of New England
TELEPHONE	201-449-4275
EMAIL	tsaucier@sitedesignassociates.biz
PROJECT NAME	Marine Science Center Pier – 11 Hills Beach Road
PROJECT SITE	Biddeford, ME
DATE OF REQUEST	April 10, 2023
DATE REVIEWED	October 19, 2023

Thank you for the opportunity to comment on the above referenced project. This project appears to have no impact on a structure or site of historic, architectural or archaeological significance to the Penobscot Nation as defined by the National Historic Preservation Act of 1966, as amended.

If there is an inadvertent discovery of Native American cultural materials during the course of the project, please contact my office at (207) 817-7471. Thank you for consulting with the Penobscot Nation Tribal Historic Preservation Office with this project.

Chris Sockalexis, THPO
Penobscot Nation

Tribal Historic Preservation Office
Passamaquoddy Tribe
PO Box 159 Princeton, Me. 04668
207-214-4051

Site Design

23 Whitney Way

Topsham, Me

Re: Biddeford – 11 Hills Beach Rd

Dear Tom;

The Passamaquoddy THPO has reviewed the following applications regarding the historic properties and significant religious and cultural properties in accordance with NHPA, NEPA, AIRFA, NAGPRA, ARPA, Executive Order 13007 Indian Sacred Sites, Executive Order 13175 Consultation and Coordination with Indian Tribal Governments, and Executive Order 12898 Environmental Justice.

The Pier Project listed above will not have any impact on cultural and historical concerns of the Passamaquoddy Tribe but is concerned about the road work, will there be archeological work . Should buried artifacts, human remains, cultural sites or ground features be unexpectedly unearthed during ground disturbing activities, all construction should immediately cease and the resources be examined by a professional archaeologist. Additionally, all appropriate authorities- including all pertinent tribal entities should be notified.

Sincerely;

Donald Soctomah
Soctomah@gmail.com
THPO
Passamaquoddy Tribe

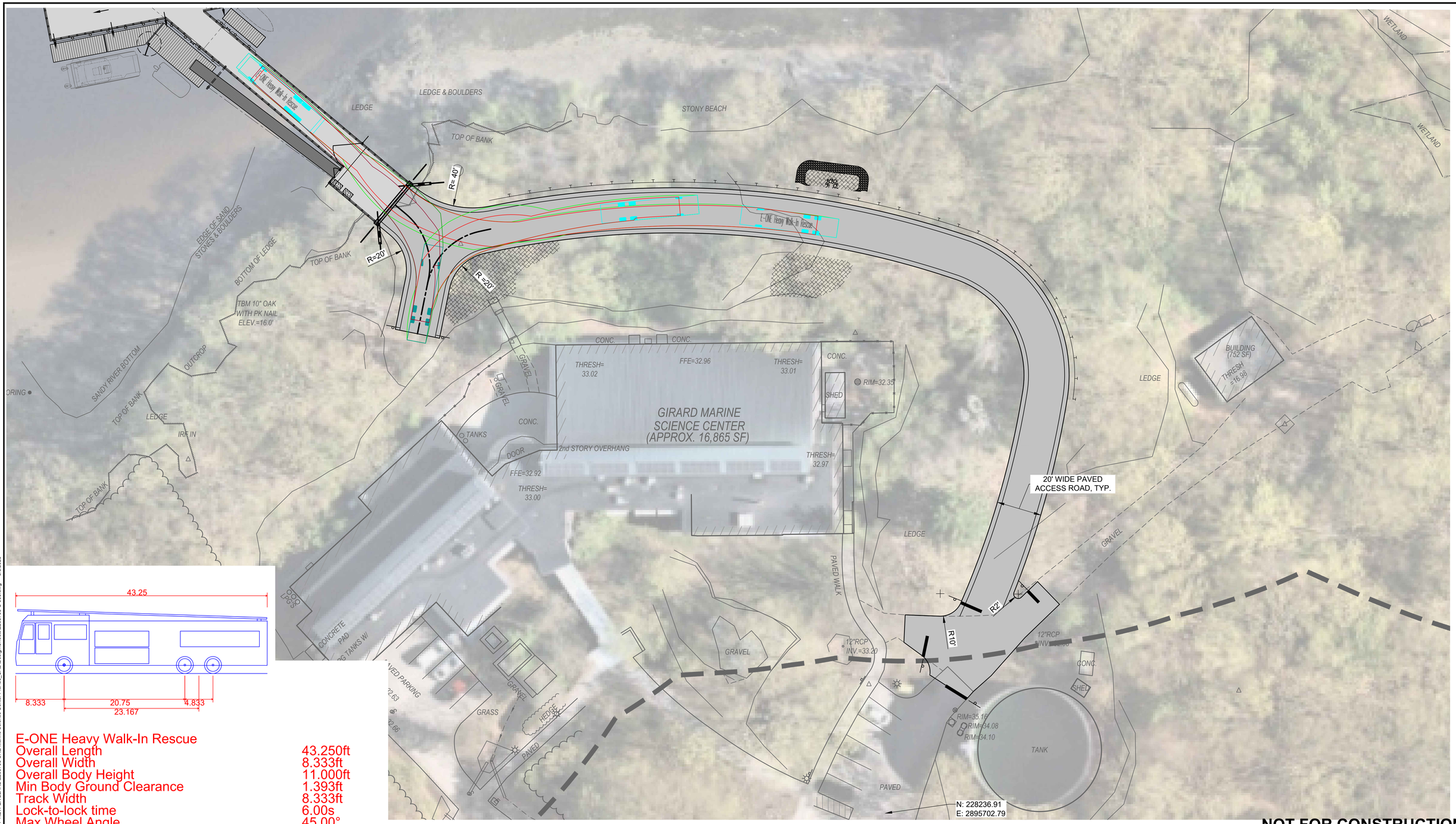

E-ONE Heavy Walk-In Rescue

Overall Length	43.250ft
Overall Width	8.333ft
Overall Body Height	11.000ft
Min Body Ground Clearance	1.393ft
Track Width	8.333ft
Lock-to-lock time	6.00s
Max Wheel Angle	45.00°

NOT FOR CONSTRUCTION

Attention:
0 1"
If this scale bar does not measure 1" then drawing is not original scale.

DRAFT

Designed:	VD
Drawn:	VD
Checked:	BMM
Approved:	BMM
P.E. No:	13033
GEI Project	2203703

GEI Consultants
GEI CONSULTANTS, INC.
5 MILK STREET
PORTLAND, ME 04101
(207)797-8901

UNE
UNIVERSITY OF NEW ENGLAND
11 HILLS RD.
BIDDEFORD, MAINE

UNIVERSITY OF NEW ENGLAND MARINE SCIENCE CENTER PIER
11 HILLS BEACH ROAD
BIDDEFORD, YORK COUNTY, MAINE

NO	DATE	ISSUE/REVISION	APP
0			

SHEET NAME: **VEHICLE CIRCULATION EXHIBIT**

SHEET NO.: 1 OF 1

DICASTELNUOVO, VINNIE B:\Working\UNIVERSITY OF NEW ENGLAND\2203703 UNE Marine Science Center Pier\00_CAD\Design\Sheets\2203703-C-003.dwg - 6/6/2025

Attachment 14
UNE Response Letter Addressing
Planning Board Member Comments

UNIVERSITY OF NEW ENGLAND

INNOVATION FOR A HEALTHIER PLANET

June 11, 2025

David Galbraith, City Planner
City of Biddeford
P.O. Box 586
205 Maine Street
Biddeford, Maine 04005

RE: University of New England
Proposed Research Pier

Dear David and Planning Board Members:

In response to the questions and deliberations of the Planning Board after the presentation and public comments, UNE is pleased to submit the following:

After all of the discussion at the last meeting, is was clear that there was confusion on what city ordinances and regulations are applicable to this project and the pending Site Plan review.

Review Criteria
Toward the end of the May 21, 2025 Planning Board meeting and then in writing after the meeting, the City Solicitor, Harry Center, stated that the Planning Board process was governed by the City's Ordinances relating to Site Plan review and Shoreland Zoning Ordinance standards. The Site Plan criteria are found in Article XI.II Section 5.B of the City Ordinance while the Shoreland Zoning standards are found in Article XIV Section 15(c).

On May 27, 2025, Attorney Center wrote to the Planning Board reiterating what criteria the Planning Board's decision was governed by. He wrote, in part: "At this time, I see no basis for the City's Planning Board to deny this permit based upon the water depth at the location, the current, or any of the accusations made at the last meeting- as there are no standards within the City's Code of Ordinances/Shoreland Zoning Ordinance that would justify or support the denial of a pier based on such claims by the opponents." See attached, *EXT: UNE Research Pier*, at the end of this letter.

Prior to the May 21 meeting, Planning Office staff issued its report, *Planning Board Staff Report,* dated May 13, 2025, in regards to this project, in which it indicated that the Site Plan and Shoreland Zoning Review criteria applied to UNE's application for site plan approval. From a Zoning perspective, this project should be reviewed against the Institutional Zone and Shoreland Zone standards. This project was included on the

Planning Board approved University of New England Institutional Zone Master Plans on February 9, 2009, February 3, 2016, and again on the current plan approved April 19, 2023. In the aforementioned report, the City Planner wrote, in part: "Staff find that the application satisfies the City's Shoreland Zoning Ordinance and Site Plan criteria."

In light of the fact that there continues to be uncertainty about the Harbormaster's role in the approval of UNE's proposed pier. UNE's obligations and the Harbormaster's role are set forth in Section 74-35 of the City Ordinance. It is very important to understand that Section 74-35 was amended in September 2023 in order to clarify the role of the Harbormaster in the process as well as to clarify what an applicant must do to obtain permission. The amendments were drafted by John Schafer and presented to the City Council's Policy Committee by John Schafer on August 7, 2023. Essentially, the amendments created subsections with almost all new language becoming Sections 74-35(c) and (d).

As one can see in Section 74-35, there is no requirement or authority for the Harbormaster to evaluate a pier design or location and no standards or criteria by which any such evaluation would be done. There are no dimensional or design standards for the construction or location of a pier in any city ordinance. Nowhere does the Ordinance state that permission to construct a pier is contingent upon location, orientation, size, depth of water, current, or materials.

The Ordinance begins with **Section 74-35(a)**, which states: "No additions, alterations, new construction or/or changes to an existing wharf, pier or landing shall be made without prior permission of the Harbormaster."

Section 74-35(b) then states: "Permission for the construction of any new wharf or pier within the jurisdictional limits of the City shall not be granted without approval of the Harbormaster, along with federal, state and local governing authorities."

So that applicants can understand what they need to do, **Section 74-35(c)(1)-(10)** provides the detail of what an applicant must do to "obtain permission for any new wharf or pier." In June of 2024, UNE submitted the required information, including all items listed in subsections 1-10.

On August 19, 2024, UNE was notified by the City Manager that "Based on this information and in harmony with my earlier communications, please consider this as formal notification from the City of Biddeford that the application has been found in compliance with the above-mentioned City Code." *See* attached, scan_jbennett_2024-08-19-10-06-53.pdf.

That letter of course did not mean that UNE could begin building the pier. Rather, under Section 74-35, UNE is required to obtain regulatory approvals from entities such as the Army Corps of Engineers, the Maine Department of Environmental Protection, the Saco River Corridor Commission, and the Planning Board (referred to in the Ordinance as Biddeford Code Enforcement).

So that applicants and the Harbormaster would be clear about the Harbormaster's role, **Section 74-35(d)** provides the details of the Harbormaster's role and states: "The process to obtain permission for any new wharf or pier shall be facilitated by the Harbormaster. Initially, the Harbormaster shall be available to guide the applicant through the application process and finally, to sign off that all regulatory approvals have been obtained for construction."

Consistent with practice prior to the 2023 amendments, UNE engaged the Harbormasters and Chair of the Harbor Commission back in 2016 and sought their counsel on the proposed pier project. Their input was considered with some of it incorporated into the design that has been presented to the Planning Board. UNE engaged again with the current Harbormaster in later 2023 and listened to his stated concerns. Both Harbormasters' 2016 and 2023 input is described in detail in the memos from GEI, dated November 28, 2023, and from Baker Design Consultants (later merged into GEI), dated March 22, 2016. These two documents are included in the original Site Plan Application. In its staff report, the Planning Staff recognized the 2023 memo and quoted from it in its staff report.

To date, UNE has obtained required regulatory approvals from the Saco River Corridor Commission, Maine Department of Environmental Protection and the Army Corp of Engineers, which approvals have been provided to the Planning Board in the original UNE submission. The only remaining regulatory approval required under Section 74-35(c)(10) is the Site Plan Review Approval. Once all required regulatory approvals are obtained, the Harbormaster can finally "sign off that all regulatory approvals have been obtained," resulting in UNE having permission from the City to build the pier.

For anybody who still has questions, it could be helpful for them to watch John Schafer's August 7, 2023 discussion with the Policy Committee about the amendments to Section 74-35 that he drafted. A video of the meeting can be found on the City website at https://biddefordme.portal.civicclerk.com/event/1607/media

As one can see for themselves, during that meeting, Mr. Schafer told the Committee that the Harbormaster is "nothing but a facilitator" of the process and that the Harbormaster does not approve piers or issue permits. Mr. Schafer stated that Section 74-35(c)(1) - (10) is "nothing but a blueprint" for achieving approval from other regulators. When pressed by Committee members for clarification, Mr. Schafer emphasized that the Harbormaster is "nothing but a facilitator" and that the Harbormaster only affirms that approvals have been obtained and makes sure that the "blueprint is followed."

Moorings

The Planning Board deliberations also reflected on the potential impacts to moorings. While this is **not** a criterion of the Site Plan review ordinance, UNE will work with the City to mitigate any impacts and has offered to pay for any moorings relocations that may be required.

To clarify the consideration of ownership, as per the Maine State Statue, Title 38, Waters and Navigation, Chapter 1.1.3, Mooring Sites, "Assignment of these mooring privileges does not confer any right, title or interest in the submerged or intertidal lands owned by the state". This statue further clarifies "the harbor master shall assign and indicate only to the masters or owners of boats and vessels the location that they may occupy for mooring purposes and shall change the location of those moorings from time to time when the crowded condition of that harbor or great pond, the need to conform to section 7-A or other conditions render the change desirable".

The actual mooring balls and their associated tackle are the responsibility of the boat owner. The Biddeford Mooring Permit Application clearly states "The location is subject to change at any time at the discretion of Harbor Master or Deputy as conditions dictate.", in coordination with the state statute. Thus, the land is owned by the state, the moorings by the boat owners, and the harbor master has the reasonability to assign and relocate these moorings.

To better understand the potential impacts to moorings, UNE requested from the city it's mooring map, but was informed one was not available. In consultation with the Maine State Bureau of Parks and Recreation, we again requested a copy of the Biddeford Mooring Map. The Submerged Lands Coordinator informed UNE that they had spoken with the harbormaster and confirmed no mooring map was available. They were are to confirm from the harbormaster that two mooring were impacted by the proposed UNE Research Pier development.

In comparison of historical, 09/18/2013, Google Earth imagery, as compared to 2024, there appears to be several unoccupied mooring locations in this general area that could meet the need of relocating the impacted moorings. Additionally, UNE has offered to "swap" one of its current mooring locations for one of the impacted mooring locations. The owners of these moorings do not have a dingy on UNE's abutting shoreline and are already motoring to the moorings from other locations, so depending on where they are coming from, the relocated moorings might be closer to their point of origin.

Analysis documentation
In 2008 and 2009, UNE initiated an analysis of 9 sites along its shoreland to evaluate options for a new pier. Based on the criteria reviewed and UNE's programmatic needs, Site 7 was chosen as the optimal site for UNE. This site then was scrutinized for additional considerations utilized in the ultimate design. This included geotechnical surveys on both land and in water. Contour surveys were conducted twice in the water and then again on land. Evaluations of current and its impacts were conducted. Wetlands were surveyed and impacts analyzed. Initial discussions were had with all regulatory bodies in 2015 and 2016. This included conducting a site visit in 2016, with the harbormasters and chair of the Harbor Commission, whose input was incorporated into the design.

The results of the investigatory process were presented to City staff, including the City Manager, City Planner, Harbormasters, Chair of the Harbor Commission/Planning Board

member and Development staff. That presentation is attached at the end of this letter. The site option plan with the 9 sites and the subsequent evaluation matrix are contained within the presentation. It is important to note that while the estimates of cost are relative, they are 15 years old and a thus not relevant to today's market. Additionally, the size of the pier has direct correlation to the environmental impact. A larger pier requires additional pilings and results in additional shading of the bottom of the river. This is a much more significant consideration of the regulatory agencies in marshy areas, like site 8, as compared to the smaller rock/rubble intertidal zone at site 7.

It is also important to note that the current at site 7 is slower than further out towards the channel, resulting is easier and more controlled docking and less impacts from ice flowing in the spring runoff. This was also recognized in the consultations with the harbor masters during the site visit in 2016, where they advised "*Relocate pier further upstream and change orientation to reduce current exposure. The Harbormasters confirmed that the channel restriction located just seaward of the pier created fast currents that ran parallel to shore. Based on their knowledge of the harbor, they suggested the pier would be better rotated upstream parallel to the current and moved upstream and inshore from the Layout 1 location. This would put the pier in water with less tidal current and make docking easier and safer".* The area just seaward of site 7 is site 8.

Request for NIST application
The National Institute of Standards and Technology, NIST, was solicited for funding by UNE to construct the pier. The application is directly related to financing and it is not in any way related to regulatory permitting. The application does not seek approval of the pier design nor location.

In closing, we hope this helps to address some of the questions related to application. We are confident that our submission conforms to the required city standards and ordinances. We look forward to reviewing the Site plan Review Criteria with you in greater detail at the June 18th meeting.

Sincerely,



Alan Thibeault
Vice President for University Operations

cc: Tom Saucier, Site Design Associates
Dan Bannon, GEI

From: Galbraith, David
To: Alan Thibeault; Plotkin, Alexa; Patoine, Larry; Dubois, Matthew; Angers, Roch; Susan Deschambault; Deschambault, Susan; Lewis, Kayla; Beaudette, Stephen
Cc: Center, Harry; Whitten, Nan
Subject: EXT: UNE Research Pier
Date: Wednesday, May 28, 2025 11:51:19 AM
Attachments: Shoreland Zone Ordinance Relating to Piers Docks Wharfs.pdf

This email originated from outside of UNE.

All, this email was sent to me by the City Solicitor (Harry Center) late last night. In his email Harry states *"I will provide this advice/opinion to the Planning Board before the June 18, 2925 meeting and I would ask the Planning Department to please forward this email to all members of the planning board and the designated official from UNE".* As such, I am forwarding the entire email string and Harry's response.

As always, please do not respond to this email or discuss this matter with other Board members. I have also copied Alan Thibeault of UNE.

Thanks all & looking forward to seeing you all at the site walk on June 9th.
David

From: Harry Center <hcenter@woodedlaw.com>
Sent: Tuesday, May 27, 2025 8:31 PM
To: Matthew Haas <matthew1@maine.rr.com>; Whitten, Nan <Nan.Whitten@Biddefordmaine.org>
Cc: Galbraith, David <David.Galbraith@biddefordmaine.org>
Subject: RE: Public notice

Caution: This is an external email. Please take care when clicking links or opening attachments. When in doubt, contact the IT Department

Mr. Hass:
Attached is the provision of the City's Shoreland Zoning Ordinance relating to "approval" of piers. There are no standards for "local knowledge"; depth, current, moorings or any other complaints by the opponents of the UNE project.
These are the standards and provisions that the City Planning Board must apply to the application.
Additionally, because this is a non-residential development, site review is also required--however, none of the standards in that provision of the City Code of Ordinances relate to telling an applicant where the location of a pier should be located.
I will provide this advice/opinion to the Planning Board before the June 18, 2925 meeting and I would ask the Planning Department to please forward this email to all members of the planning board and the designated official from UNE. I will continue to follow the law and due process requirements to all parties.
At this time, I see no basis for the City's Planning Board to deny this permit based upon the water depth at the location, the current, or any of the accusations made at the last meeting-as there are no standards within the City's Code of Ordinances/Shoreland Zoning Ordinance that would justify or support the denial of a pier based on such claims by the opponents. If someone can point to a Shoreland Zoning Ordinance provision, City land use standard or other ordinance within the City's jurisdiction to deny this request for approval,

then the Planning Board should consider any such provision and decide. Further if an opponent can point to a City Ordinance provision that allows the City to dictate the location of the pier, I will be happy to review it.
I made that statement at the meeting, in good faith, that after the Planning Board heard from the public, I would give them legal advice regarding my opinion as to the legal standards the Planning Board must apply, as many of the public comments related to issues that are not within the Planning Board's jurisdiction. However I will respond to your email now.
The Planning Board will make its decision based on the standards set forth in the attached Ordinance. I have not located any other City of Biddeford Land Use Ordinance provision related to docks, piers, wharfs and City staff has not alerted me to any others. If you or anyone else are aware of anything within the City's Code (available online at the City's website) please feel free to raise such provisions and staff and I will review them.
Thank you,
Harry B. Center, II Esq.
City Attorney

From: Matthew Haas <matthew1@maine.rr.com>
Sent: Tuesday, May 27, 2025 4:52 PM
To: Nan Whitten <Nan.Whitten@biddefordmaine.org>
Cc: David Galbraith <David.Galbraith@biddefordmaine.org>; Harry Center <hcenter@woodedlaw.com>
Subject: Re: Public notice

During the meeting near the end there was a discussion on the limits of the boards review . harry center stated he has and will issue them some guidance on the extent and limits of their review. and he said it was available to the public.

Matthew Haas
Sent from my iPhone

> On May 27, 2025, at 1:57 PM, Whitten, Nan <Nan.Whitten@biddefordmaine.org> wrote:
>
> ***Guidance, do you mean the ordinance or do you have something specific in mind?***
>
> ---
>
> **From:** matthew1@maine.rr.com <matthew1@maine.rr.com>
> **Sent:** Tuesday, May 27, 2025 1:51 PM
> **To:** Whitten, Nan <Nan.Whitten@Biddefordmaine.org>
> **Subject:** RE: Public notice
>
> **Caution:**This is an external email. Please take care when clicking links or opening attachments. When in doubt, contact the IT Department
>
> Good afternoon, Can I get copies of the guidance the planning board was

issued by city legal council?

From: "Whitten, Nan"
To: "Matthew Haas"
Cc:
Sent: Tuesday May 27 2025 7:46:38AM
Subject: RE: Public notice

Thank you Matthew, you are on the list

From: Matthew Haas <matthew1@maine.rr.com>
Sent: Thursday, May 22, 2025 6:33 PM
To: Whitten, Nan <Nan.Whitten@Biddefordmaine.org>
Subject: Re: Public notice

> **Caution:**This is an external email. Please take care when clicking links or opening attachments. When in doubt, contact the IT Department

Matthew haas
36 meeting house road
Biddeford maine
297-590-3889

Matthew Haas
Sent from my iPhone

> On May 22, 2025, at 2:34 PM, Whitten, Nan <Nan.Whitten@biddefordmaine.org> wrote:
>
> ***Happy to do so. May I please have your full name and mailing address?***
>
> ***Thank you for reaching out***
>
> ***Nan Whitten***
> ***City of Biddeford***
> ***Office Manager***
> ***Planning & Development***
> ***207-284-9115***

From: matthew1@maine.rr.com <matthew1@maine.rr.com>
Sent: Thursday, May 22, 2025 2:32 PM
To: Whitten, Nan <Nan.Whitten@Biddefordmaine.org>
Subject: Public notice

Caution: This is an external email. Please take care when clicking links or opening attachments. When in doubt, contact the IT Department

Please add me to the public notice roster for the UNE pier project. Thank you

City of Biddeford, Maine

The Office of
City Manager
James A. Bennett
Email: james.bennett@biddefordmaine.org

August 19, 2024

University of New England
11 Hills Beach Road
Biddeford, Maine 04005

Attention: Mr. Alan Thibeault, VP of University Operations

RE: Notice to Proceed with External Reviews

Dear Mr. Thibeault,

On August 9, 2024, I received written clarification from Mr. Wayne Duffett, PE of TECAssociates that UNE's proposed Research Pier and Float System has complied with City Code 74-35 subsections (c) 1-10. Those sections are as follows:

(1) A formal boundary survey that has been documented at the Registry of Deeds.
(2) A copy of the boundary survey showing the littoral zone, established by extending property lines seaward.
(3) A location map from a portion of a USGS topographic map or coastal chart.
(4) Distance to navigable channels or any federal navigation project.
(5) Mean high- and low-water boundary.
(6) A plan view on the drawing(s) that shows the location and dimensions of the applicant's structure(s) in relation to the applicant's property lines.
(7) A typical cross section/side view of the applicant's structures on the drawing(s).
(8) Evidence that owners of abutting properties have been notified of the applicant's intended project.
(9) Evidence that the 1) Maine Historic Preservation Commission, 2) Aroostook Band of Micmac, 3) Passamaquoddy Tribe of Indians: Pleasant Point; Indian Township, 4) Houlton Band of Maliseet Indians, and 5) Penobscot Indian Nation have been notified of the applicant's intended project.
(10) Completed applications to the Army Corps of Engineers, Department of Environmental Protection and Biddeford Code Enforcement. A regulatory permit from the Saco River Corridor Commission may also be required in some instances.

Based on this information and in harmony with my earlier communications, please consider this as formal notification from the City of Biddeford that the application has been found in compliance with

the above mention City Code. That finding allows the application to proceed in the next steps of the review process; namely formal review by all agencies except those that are part of the City of Biddeford. After each and all of those processes are complete, the City will move forward with the final review(s) by agents and Committees of the City.

While I don't believe it is necessary, let me empathically state that this communication does not in any form, imply that the City has in any way made a determination that the location submitted has been approved. Said approval will considered after completion of all process and in compliance with applicable laws, regulations. This includes all local ordinances.

Please feel free to reach out to me if you have any questions

Sincerely,

James A. Bennett
City Manager

CC: Biddeford Mayor and City Council

University of New England Pier
Biddeford, Maine



Baker Design Consultants
Civil, Marine & Structural Engineering
7 Spruce Road, Freeport, ME 04032
b.baker@bakerdesignconsultants.com

January 26, 2016

Site Mapping & Plans

NOAA CHART

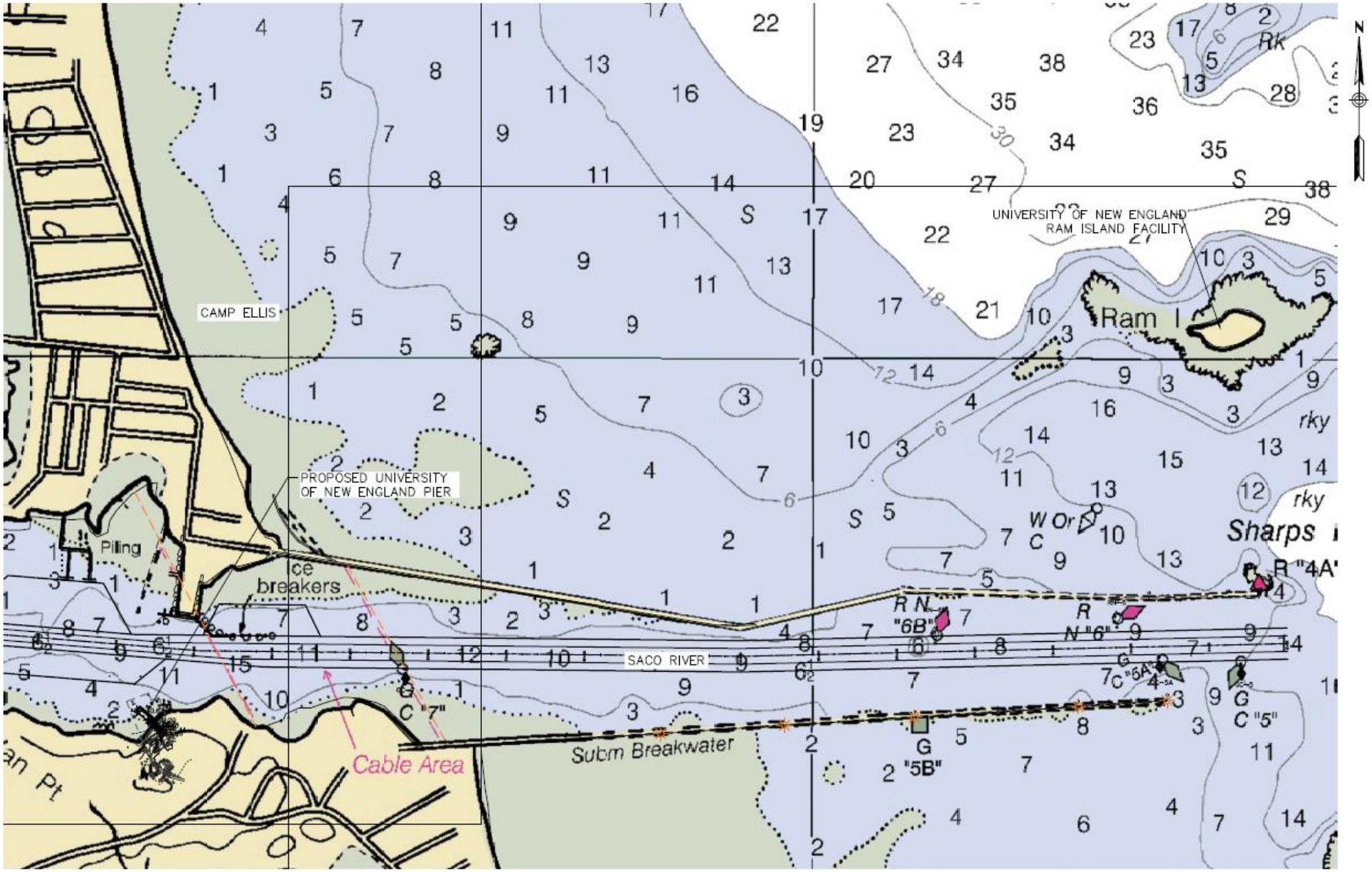

PLAN

0 150 300 450 900

BAKER DESIGN CONSULTANTS
Civil, Marine, and Structural Engineering

NO.	DATE	
A	6-25-15	BJB
	PROGRESS REVIEW SUBMISSION	INT.

DESIGNED BY: JJC
DRAWN BY:
CHECKED BY: BJB
SCALE: AS SHOWN

SHEET TITLE: PROJECT VICINITY PLAN
PROJECT: UNIVERSITY OF NEW ENGLAND UNE MSC WATERFRONT BIDDEFORD, MAINE

DATE: FEBRUARY 2015
CONTRACT NO. 15-07
SHEET NO. SK-1
REV. A

Site Selection Study

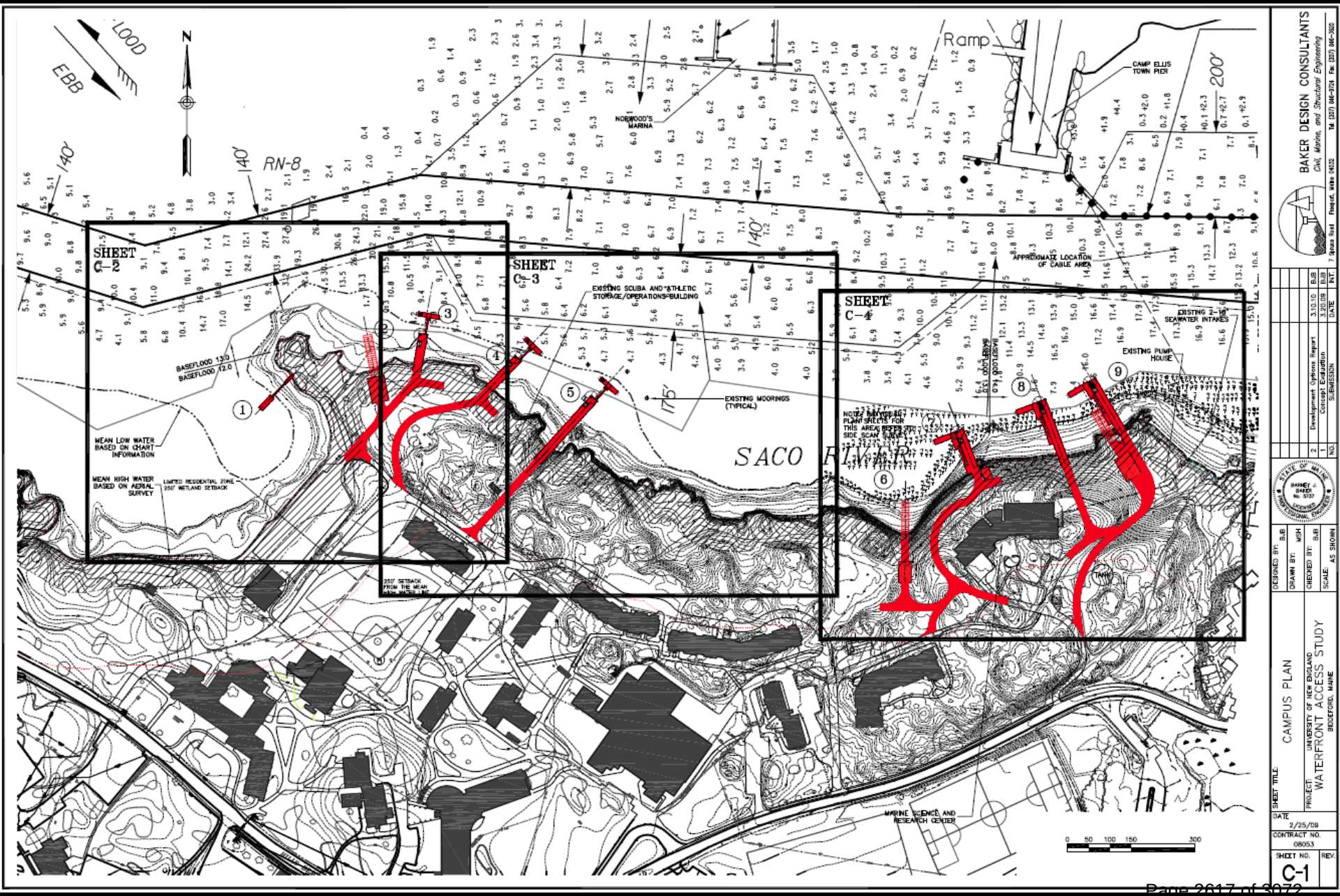

Site Selection Study

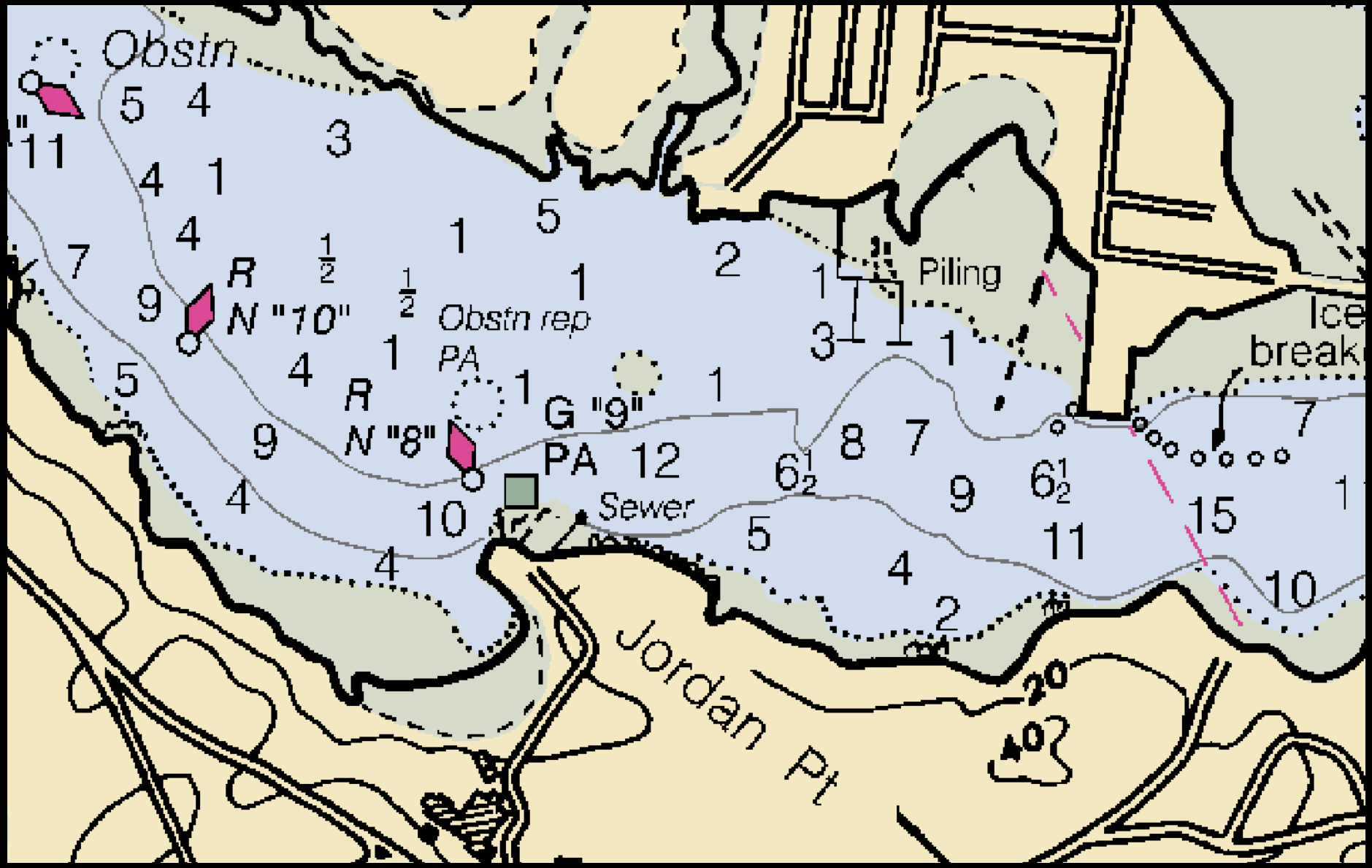

Site Selection Study

TABLE 1 SITE DEVELOPMENT CRITERIA		SITE 1 Existing Pier Improved	SITE 2 New Boat House & Ramp	SITE 3. New Pier with gangway extension	SITE 4 New Pier with gangway extension	SITE 5 Replacement Pier- gangway ext	SITE 6 New Boat House & Ramp	SITE 7 New Pier to deep water	SITE 8 New Pier to deep water	SITE 9 New Pier, Boat House & Ramp.
General Description		Improvements to existing shallow access site	No Pier. Dedicated launching &storage.	Dedicated Pier with Vehicle Access	Dedicated Pier with Vehicle Access	Replaces existing shallow access at recreation site	Steep access . No Pier. Dedicated launching & storage.	Dedicated Pier with Vehicle Access	Dedicated Pier with Vehicle Access	Dedicated Pier , Boathouse and Ramp.
Key Feature		Protected tidal Cove. Seasonal icing prevents year-round use	Tidal ramp requires hydraulic trailer rental or purchase for vessel. Floats installed on ramp to facilitate use.	Floats and Gangway removed for winter. Limited access to pier at Mid to high tide.	Floats and Gangway removed for winter. Limited access to pier at Mid to high tide.	Limited access to pier at Mid to high tide. Shared with recreational program. Pier length dictated by shallow water.	Tidal ramp requires hydraulic trailer rental or purchase for vessel. Floats installed on ramp to facilitate use.	Provides Pier to deep water. Natural protection behind escarpment. Close to Marine Science Bldg.	Avoids any blasting adjacent to the mammal tank. Close to Marine Science Bldg.	Shorefront topography allows for Pier and boat ramp. Close proximity to Neighboring properties.
Primary Affiliation with Marine Science Program		INFREQUENT Use	DEDICATED Waterfront	DEDICATED Waterfront	DEDICATED Waterfront	SHARED with Recreation	DEDICATED Waterfront	DEDICATED Waterfront	DEDICATED Waterfront	DEDICATED Waterfront
Type of Access		Seasonal	Tidal Ramp	Limited Year-round	Limited Year-round	Limited Year-round	Tidal Ramp	Year-round	Year-round	Year-round
Shared Users		UNE Staff/Students	None	None	None	UNE Recreation	None	None	None	None
LOCATION (Sheet Reference)		D-1	D-2	D-3	D-4	D-5	D-6	D-7	D-8	D-9
Distance from Marine Science Ctr	LF	2000	1500	1500	1250	1150	400	200	250	300
Setback from ACOE Channel	LF	Jordon Cove	200	175	215	450	500	350	310	250
Distance to Abutting Property	LF	600	800	1000	1075	1300	650	600	400	250
Base Flood Elev (FEMA '84-NGVD)	NGVD	12.0 (Zone V2)	13.0 (Zone V2)	13.0 (Zone V2)	13.0 (Zone V2)	13.0 (Zone V2)	13.0 (Zone V2)	13.0 (Zone V2)	14.0 (Zone V2)	14.0 (Zone V2)
Wind Exposure		W to NW	NW to N to E	NW to N to E	NW to N to E	NW to N to E	NW to N to NE	NW to N to E	NW to N to E	NW to N to E
Pier Deck Elevation	NGVD	12.0	13.0	13.0	13.0	13.0	13.0	13.0	14.0	14.0
MLW Depth at Float	FT	0-2	NA	6	6	3	NA	6	6	6
PIER GEOMETRY		$16,500.00	$0.00	$202,000.00	$224,000.00	$444,000.00	$0.00	$334,200.00	$444,200.00	$400,200.00
Length of Pier	FT	25	NA	90	100	200	NA	115	165	145
Width of Pier	FT	6	NA	20	20	20	NA	20	20	20
Jib Crane	EA	NA	NA	1	1	1	NA	1	1	1
Wave Barrier	LF	NA	NA	NA	NA	NA	NA	60	60	60
Transfer Pen (Pier Mounted)	EA	NA	NA	NA	NA	NA	NA	1	1	1
Pier Building (12x8 Marine Related)	SF	NA	NA	96	96	96	NA	96	96	96
SITE IMPROVEMENTS		$2,000.00	$45,950.00	$48,000.00	$55,000.00	$34,500.00	$37,500.00	$143,000.00	$144,000.00	$171,000.00
Access Road 16-ft w/turnaround	LF	NA	285	400	500	350	250	600	400	700
Ledge Removal	LF	NA	100	NA	NA	NA	NA	400	400	500
Utility Route (estimate ?)	LF	NA	285	400	500	350	250	300	400	700
Shore Support Building	SF	NA	NA	NA	NA	NA	NA	600	600	600
Landscaping	LS	0.1	1	1	1	0.5	1	1	1	1
FLOAT SYSTEM		$36,700.00	$0.00	$43,000.00	$43,000.00	$43,000.00	$0.00	$60,900.00	$60,900.00	$60,900.00
Gangway	FT	50	NA	40	40	40	NA	50	50	50
Unit Float Length	FT	40	NA	20	20	20	NA	40	40	40
Unit Float Width	FT	12	NA	10	10	10	NA	12	12	12
No. of Floats	EA	1	NA	3	3	3	NA	2	2	2
Fishery Cage (in Float)	EA	NA	NA	1	1	1	NA	1	1	1
BOAT RAMP		$0.00	$107,500.00	$0.00	$0.00	$0.00	$98,600.00	$0.00	$0.00	$84,600.00
Length of Ramp	FT	NA	90	NA	NA	NA	90	NA	NA	70
Width of Ramp	FT	NA	20	NA	NA	NA	20	NA	NA	20
Guide Piles	EA	NA	5	NA	NA	NA	4	NA	NA	4
Unit Float Length	FT	NA	20	NA	NA	NA	20	NA	NA	20
Unit Float Width	FT	NA	8	NA	NA	NA	8	NA	NA	8
No. of Floats	EA	NA	5	NA	NA	NA	4	NA	NA	4
BOAT HOUSE		$0.00	$460,000.00	$0.00	$0.00	$0.00	$460,000.00	$0.00	$0.00	$460,000.00
Setback from shore	FT	NA	25	NA	NA	NA	75	NA	NA	50
No. of Vessel Bays	EA	NA	2	NA	NA	NA	2	NA	NA	2
Footprint SF	SF	NA	2400	NA	NA	NA	2400	NA	NA	2400
Floor Slab Elevation	NGVD	NA	13	NA	NA	NA	13	NA	NA	13
Hydraulic Trailer	Ea	NA	1	NA	NA	NA	1	NA	NA	1

Site Selection Study

TABLE 2 REGULATORY CONSIDERATIONS	SITE 1 Existing Pier Improved	SITE 2 New Boat House & Ramp	SITE 3. New Pier with gangway extension	SITE 4 New Pier with gangway extension	SITE 5 Replacement Pier- gangway ext	SITE 6 New Boat House & Ramp	SITE 7 New Pier to deep water	SITE 8 New Pier to deep water	SITE 9 New Pier, Boat House & Ramp.
PERMIT AGENCIES									
ACOE Dept of the Army	☑	☑	☑	☑	☑	☑	☑	☑	☑
ME DEP NRPA/Site Location	☑	☑	☑	☑	☑	☑	☑	☑	☑
ME DOC Submerged Lands	NA	NA	☑	☑	☑	NA	☑	☑	☑
Saco River Corridor	☑	☑	☑	☑	☑	☑	☑	☑	☑
City of Biddeford	☑	☑	☑	☑	☑	☑	☑	☑	☑
HABITAT IMPACTS									
Upland	Minimal Change to existing access and grading.	Marine related facility (Boathouse and ramp) constructed within 75-ft setback.	Minor grading to create road. Turn around within 75-ft setback.	Road follows natural gradient. Turn around within 75-ft setback.	Access road improves existing route.	Marine related facility (Boathouse and ramp) constructed within 75-ft setback.	Major grading to create access road within 75-ft setback.	Major grading to create access road within 75-ft setback.	Marine related facility (Boathouse and ramp) constructed within 75-ft setback.
Shoreline	Stub Pier Constructed. Minimal shading	Cut/fill to create boathouse pad and ramp gradient.	Pier extends to low water.	Pier extends to low water.	New pier replaces existing facility	Cut/fill to create boathouse pad and ramp gradient.	Pier extends to Deep water with L-shaped float system.	Pier extends to Deep water with L-shaped float system.	Pier extends to Deep water with L-shaped float system.
Benthic	Characterization Required. Float sits on seabed at extreme low tide.	Intertidal impacts associated with ramp construction.	Shading from new floats.	Pier extends to MLW. Shading from floats	Pier extends to MLW. Shading from floats	Intertidal impacts associated with ramp construction.	Shading from pier/floats.	Shading from pier/floats.	Shading from pier/floats.
Water Quality	Shading from float.	Buffer to control ramp/building runoff.	Fishery Cage.	Fishery Cage.	Fishery Cage.	Buffer to control ramp/building runoff.	Fishery cage and mammal pen.	Fishery cage and mammal pen.	Runoff, fishery cage and mammal pen.
ADA ISSUES									
Pier	ADA access to Pier head	15% grade required to launch boats.	ADA access to Pier head	ADA access to Pier head	ADA access to Pier head	15% grade required to launch boats.	ADA access to Pier head	ADA access to Pier head	ADA access to Pier head
Gangway	Does not meet ADA Guidelines for length (80-ft). ADA width and handrail	NA	Does not meet ADA Guidelines for length (80-ft). ADA width and handrail	Does not meet ADA Guidelines for length (80-ft). ADA width and handrail	Does not meet ADA Guidelines for length (80-ft). ADA width and handrail	NA	Does not meet ADA Guidelines for length (80-ft). ADA width and handrail	Does not meet ADA Guidelines for length (80-ft). ADA width and handrail	Does not meet ADA Guidelines for length (80-ft). ADA width and handrail
VISUAL IMPACT									
From River Corridor	On Jordon Cove. Not directly exposed to the river corridor.	Building and Ramp will be visible from the river corridor.	Pier extends into river corridor.	Pier extends into river corridor.	Pier extends into river corridor.	Building and Ramp will be visible from the river corridor.	Pier extends into river corridor.	Pier extends into river corridor.	Building and Ramp and Pier visible from the river corridor.
SPECIAL CONSIDERATIONS									
Noise	No change from current conditions.	No change from current conditions.	Minimal Impact.	Minimal Impact.	Minimal Impact.	Minimal Impact.	Minimal Impact.	Minimal Impact.	Considers proximity to Neighboring properties.
Navigation	No Impact to existing Mooring Field.	No Impact to existing Mooring Field.	Approximately 2 moorings displaced.	Approximately 2 moorings displaced.	Approximately 2 moorings displaced.	Approximately 2 moorings displaced.	Approximately 2 moorings displaced.	Approximately 2 moorings displaced.	Approximately 2 moorings displaced.
Water Quality	No change from current conditions.	No change from current conditions.	Minimal or No Impact.	Minimal or No Impact.	Minimal or No Impact.	Minimal or No Impact.	Minimal or No Impact.	Minimal or No Impact.	Minimal or No Impact.
Winter Icing	Not an issue with seasonal facility	Boat ramp use will be impacted by ice.	Pier must resist ice buildup.	Pier must resist ice buildup.	Pier must resist ice buildup.	Boat ramp use will be impacted by ice.	Pier must resist ice buildup.	Pier must resist ice buildup.	Pier must resist ice buildup.
River Current	Not directly on river.	Cross current with some protection from Jordan Point.	Cross current.	Cross current.	Cross current.	Maximum setback from Channel.	Cost estimate includes wave barrier for protection	Cost estimate includes wave barrier for protection	Cost estimate includes wave barrier for protection
Mitigation	Unknown	Unknown	Unknown	Unknown	Unknown	Unknown	Unknown	Unknown	Unknown

Site Selection Study

TABLE 3 SITE CONCEPT COST ESTIMATE			SITE 1 Existing Pier Improved	SITE 2 New Boat House & Ramp	SITE 3. New Pier with gangway extension	SITE 4 New Pier with gangway extension	SITE 5 Replacement Pier- gangway ext	SITE 6 New Boat House & Ramp	SITE 7 New Pier to deep water	SITE 8 New Pier to deep water	SITE 9 New Pier, Boat House & Ramp.
Description	Unit Cost	Unit									
Mob Demobilization		5%	NA	$37,655	$17,985	$19,765	$32,011	$36,590	$33,030	$39,843	$72,229
Bonds & Insurance		1%	NA	$3,766	$1,799	$1,977	$3,201	$3,659	$3,303	$3,984	$7,223
PIER											
Fixed Pier	$110.00	SF	$16,500.00	NA	$198,000.00	$220,000.00	$440,000.00	NA	$253,000.00	$363,000.00	$319,000.00
Jib Crane	$4,000.00	EA	NA	NA	$4,000.00	$4,000.00	$4,000.00	NA	$4,000.00	$4,000.00	$4,000.00
Wave Barrier	$1,000.00	LF	NA	NA	NA	NA	NA	NA	$60,000.00	$60,000.00	$60,000.00
Transfer Pen	$10,000.00	LS	NA	NA	NA	NA	NA	NA	$10,000.00	$10,000.00	$10,000.00
Pier Building	$75.00	LF	NA	NA	NA	NA	NA	NA	$7,200.00	$7,200.00	$7,200.00
SITE IMPROVEMENTS											
Access Road 16-ft	$20.00	LF	NA	$5,700.00	$8,000.00	$10,000.00	$7,000.00	$5,000.00	$12,000.00	$8,000.00	$14,000.00
Ledge Removal	$60.00	LF	NA	$6,000.00	NA	NA	NA	NA	$24,000.00	$24,000.00	$30,000.00
Utility Route (est ?)	$50.00	LF	NA	$14,250.00	$20,000.00	$25,000.00	$17,500.00	$12,500.00	$15,000.00	$20,000.00	$35,000.00
Shore Support Bldg	$120.00	SF	NA	NA	NA	NA	NA	NA	$72,000.00	$72,000.00	$72,000.00
Landscaping	$20,000.00	LS	$2,000.00	$20,000.00	$20,000.00	$20,000.00	$10,000.00	$20,000.00	$20,000.00	$20,000.00	$20,000.00
FLOAT SYSTEM											
Gangway	$350.00	EA	$17,500.00	NA	$14,000.00	$14,000.00	$14,000.00	NA	$17,500.00	$17,500.00	$17,500.00
Floats	$40.00	SF	$19,200.00	NA	$24,000.00	$24,000.00	$24,000.00	NA	$38,400.00	$38,400.00	$38,400.00
Fishery Cage (in Float)	$5,000.00	EA	NA	NA	$5,000.00	$5,000.00	$5,000.00	NA	$5,000.00	$5,000.00	$5,000.00
BOAT RAMP											
Boat Ramp	$35.00	SF	NA	$63,000.00	NA	NA	NA	$63,000.00	NA	NA	$49,000.00
Guide Piles	$2,500.00	EA	NA	$12,500.00	NA	NA	NA	$10,000.00	NA	NA	$10,000.00
Floats	$40.00	SF	NA	$32,000.00	NA	NA	NA	$25,600.00	NA	NA	$25,600.00
BOAT HOUSE											
Footprint SF	$150.00	SF	NA	$360,000	NA	NA	NA	$360,000	NA	NA	$360,000
Hydraulic Trailer	$100,000.00	Ea	NA	$100,000	NA	NA	NA	$100,000	NA	NA	$100,000
Construction Subtotal			$55,200	$654,871	$312,784	$343,742	$556,712	$636,349	$574,433	$692,928	$1,256,152
Cost Adjustment for existing site@		40%	-$22,080								
Contingency @		15%	$8,280	$98,231	$46,918	$51,561	$83,507	$95,452	$86,165	$103,939	$188,423
Construction Total			**$41,400**	**$753,101**	**$359,701**	**$395,303**	**$640,219**	**$731,801**	**$660,598**	**$796,867**	**$1,444,574**
Survey and Testing											
Geotechnical Investigation		Est.	$0	$5,000	$15,000	$15,000	$15,000	$5,000	$15,000	$15,000	$20,000
Environmental Survey		Est.	$750	$10,000	$10,000	$10,000	$10,000	$5,000	$10,000	$10,000	$10,000
Topographic Survey/Bathymetry		Est.	$1,500	$1,500	$2,500	$2,500	$2,500	$1,500	$2,500	$2,500	$2,500
Permitting		Est.	w/design services	$25,000	$25,000	$25,000	$25,000	$25,000	$25,000	$25,000	$25,000
Design Development		10%	$4,140	$75,310	$35,970	$39,530	$64,022	$73,180	$66,060	$79,687	$144,457
Bid Phase Services		0.5%	$207	$3,766	$1,799	$1,977	$3,201	$3,659	$3,303	$3,984	$7,223
Construction Admin @ Monitoring		2%	$828	$15,062	$7,194	$7,906	$12,804	$14,636	$13,212	$15,937	$28,891
Consultant Services Total			**$7,425**	**$135,638**	**$97,463**	**$101,913**	**$132,527**	**$127,975**	**$135,075**	**$152,108**	**$238,072**
PROJECT BUDGET			**$48,000**	**$888,000**	**$457,000**	**$497,000**	**$772,000**	**$859,000**	**$795,000**	**$948,000**	**$1,682,000**

Preferred Site (#7)

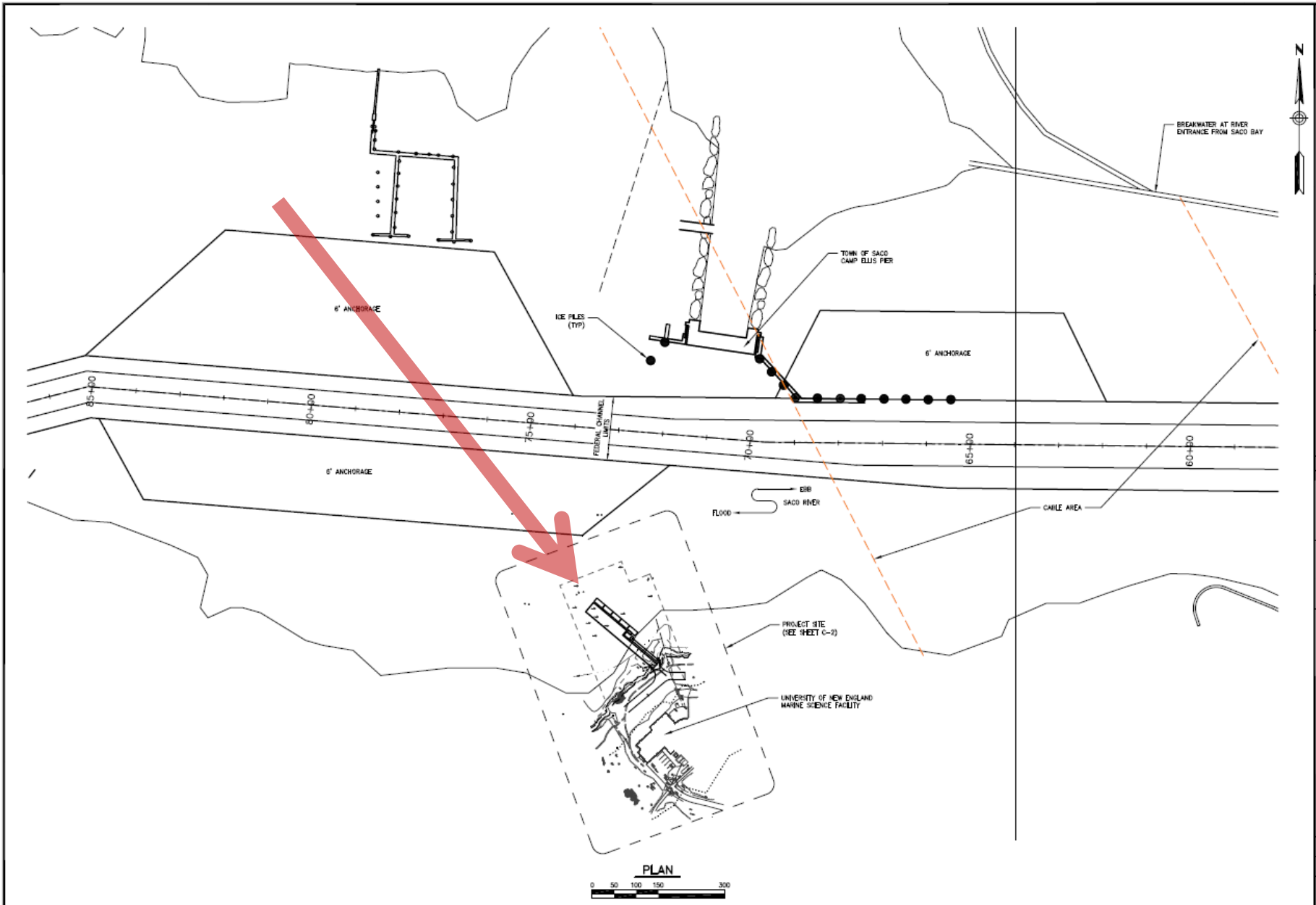

Pier Site Plan

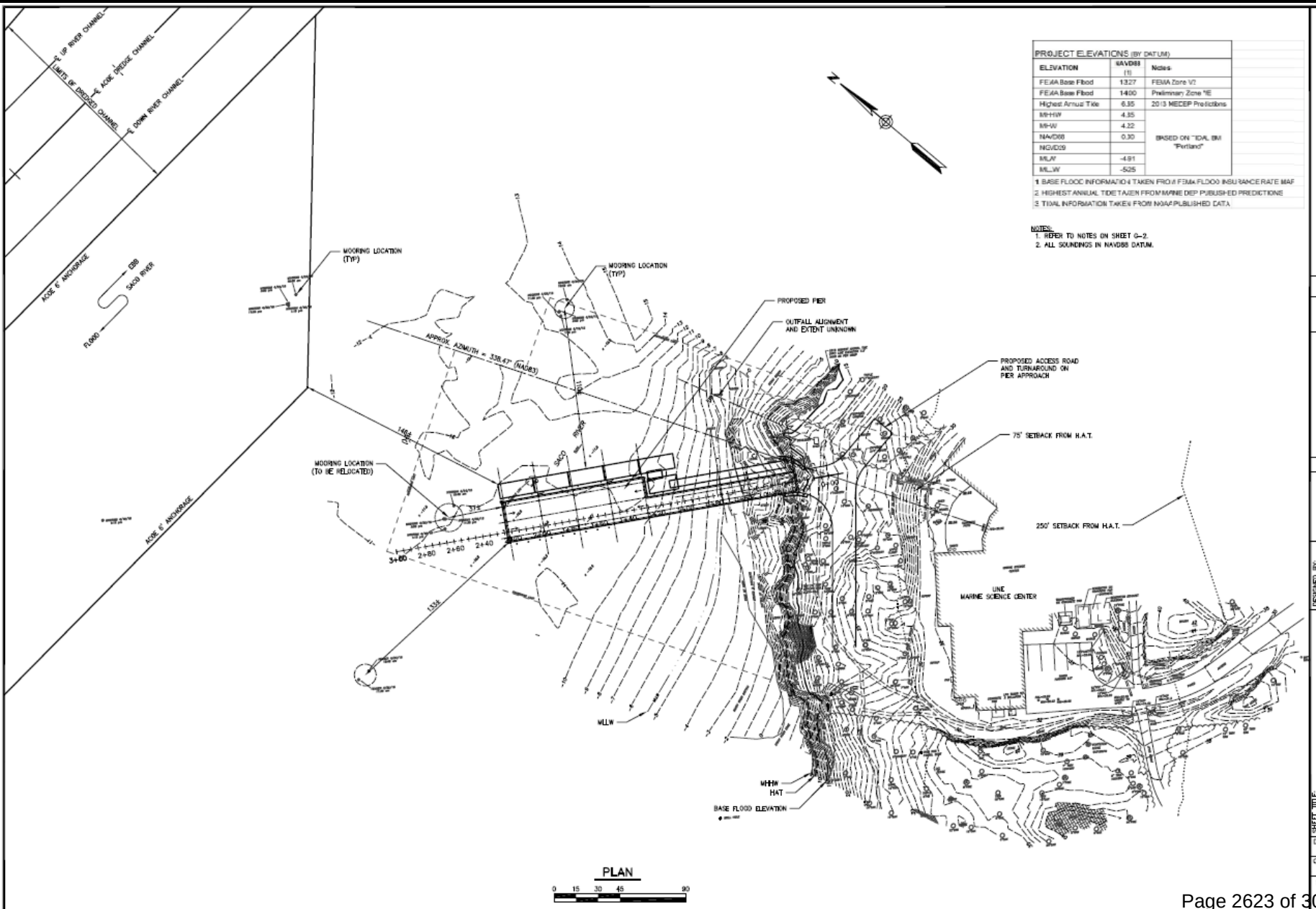

Pier Site Plan - Impacts

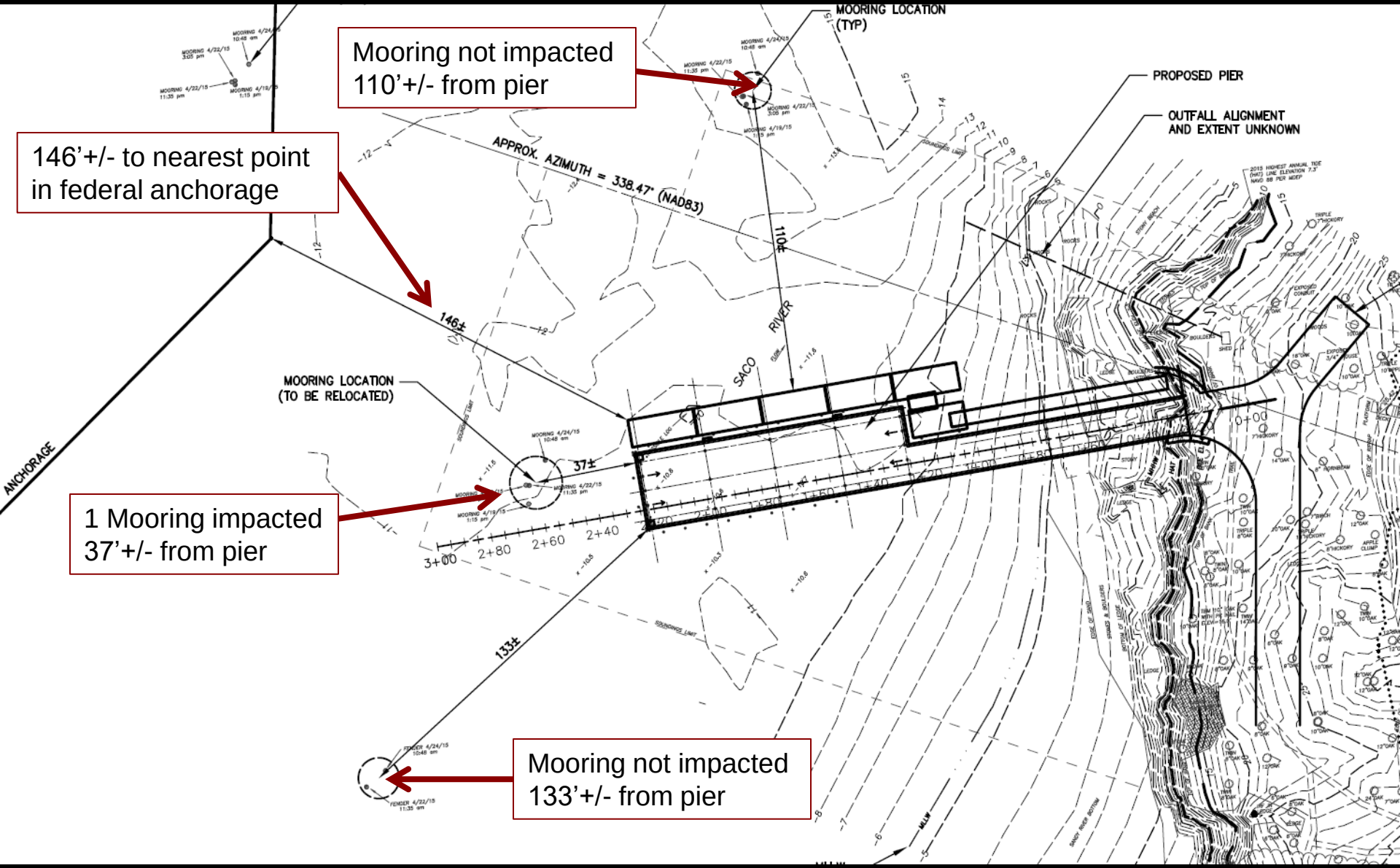

Pier Plan & Elevation

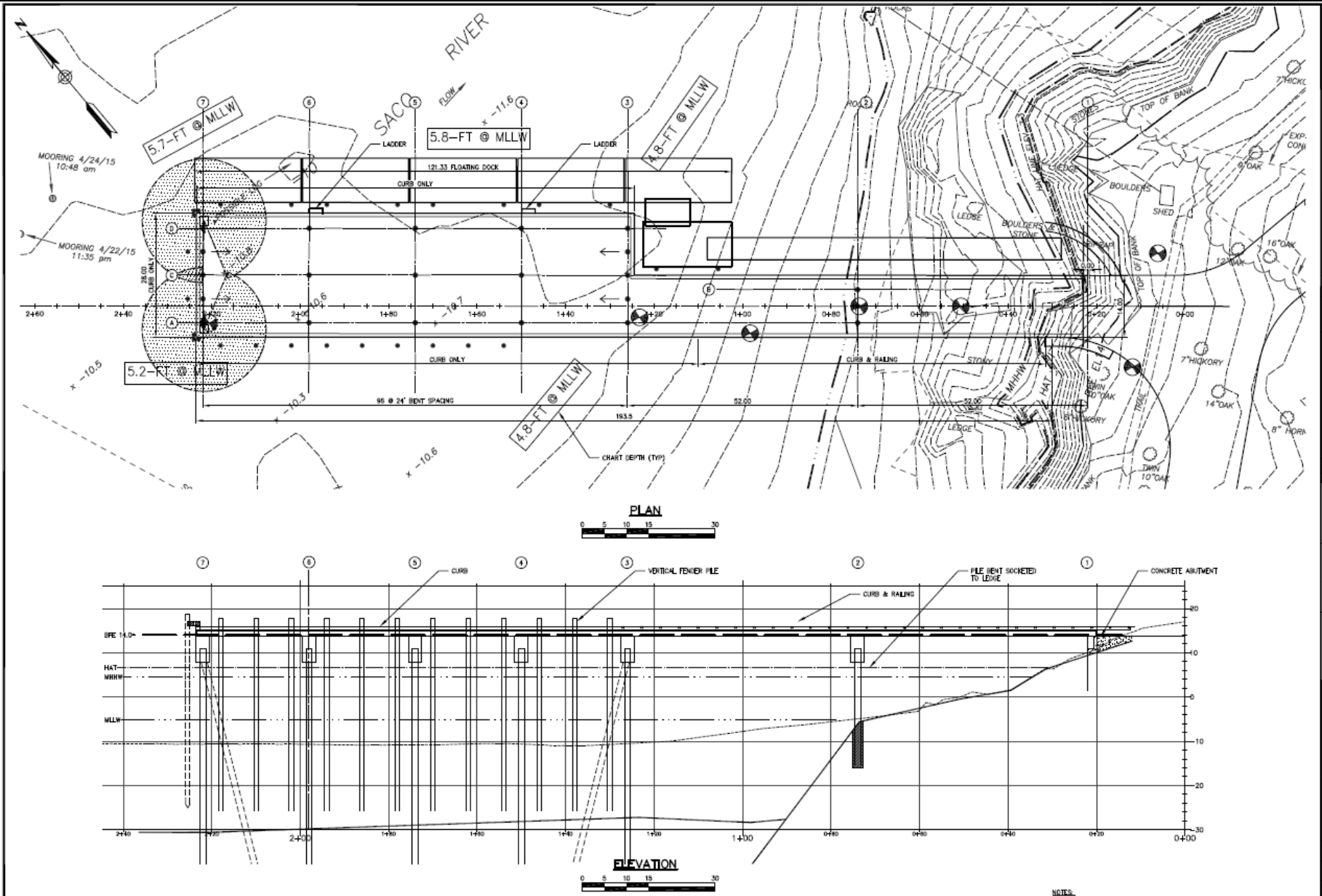

NOTES:
1. REFER TO NOTES ON SHEET G–2.
2. ALL SURVEY SOUNDINGS IN NAVD88 DATUM. CHART DEPTHS ARE NOTED.

BAKER DESIGN CONSULTANTS
Civil, Marine, and Structural Engineering
7 Spruce Road • Freeport • Maine • (207) 865-4724 • email@bakerdesignconsultants.com

NO.	REVISION / SUBSTRUCTURE	DATE	INIT.
D	REVISED SUBSTRUCTURE	12–4–15	BJB
C	REVISED LAYOUT	9–15–15	BJB
B	PROGRESS REVIEW	7–22–15	BJB
A	PROGRESS REVIEW	6–25–15	BJB
	SUBMISSION		

DESIGNED BY: JJC
DRAWN BY:
CHECKED BY: BJB
SCALE: AS SHOWN

SHEET TITLE: PIER PLAN & ELEVATION
PROJECT: UNIVERSITY OF NEW ENGLAND UNE MSC WATERFRONT BIDDEFORD, MAINE
DATE: FEBRUARY 2015
CONTRACT NO. 15–07
SHEET NO. S-1
REV. D

Aerial Photos


UNE PIER SITE
September 2014
Legend
0000
Red Oak Ln
N
400 ft
Google earth

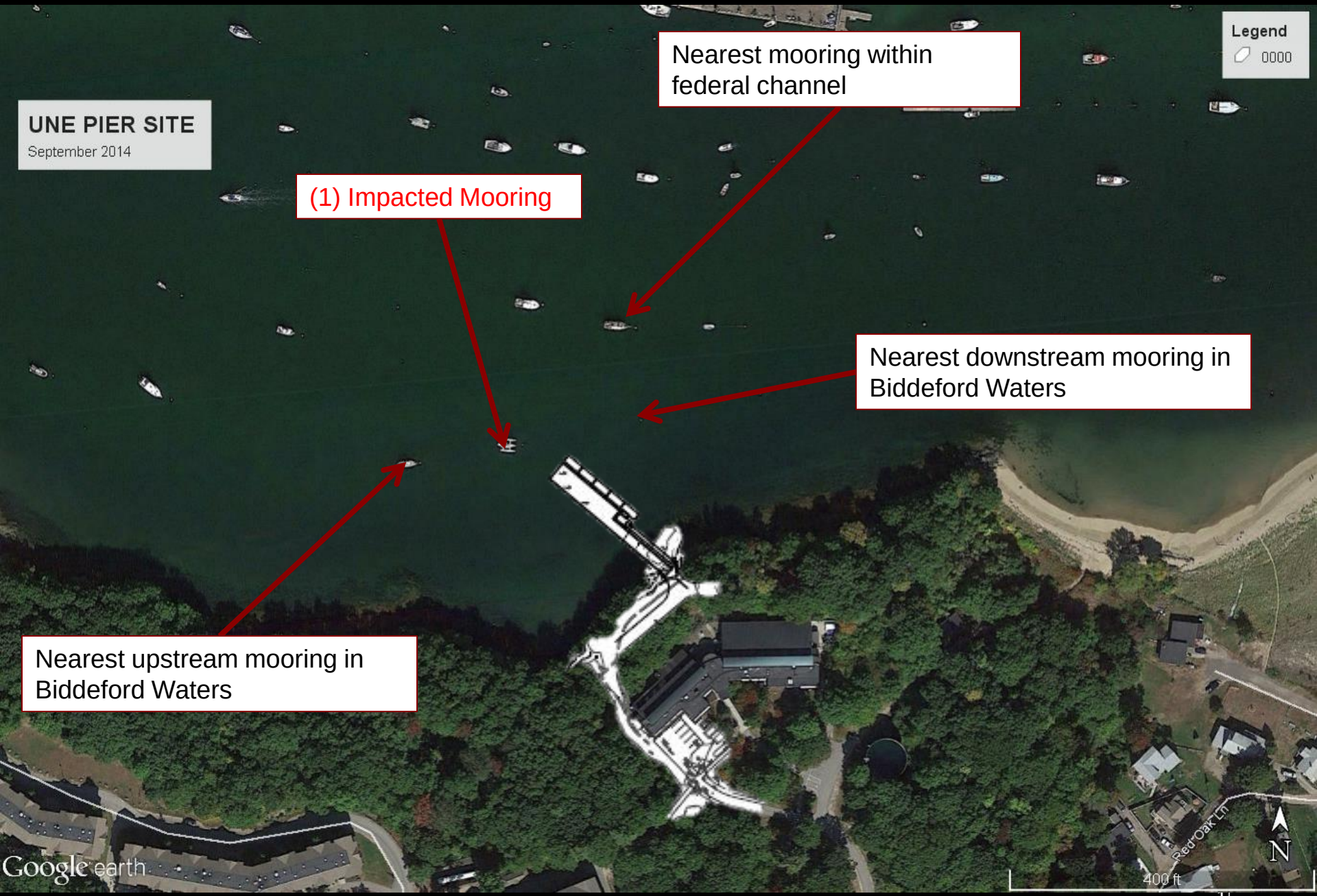
UNE PIER SITE
September 2014
Legend
0000
Nearest mooring within federal channel
(1) Impacted Mooring
Nearest downstream mooring in Biddeford Waters
Nearest upstream mooring in Biddeford Waters
Red Oak Ln
N
400 ft
Google earth

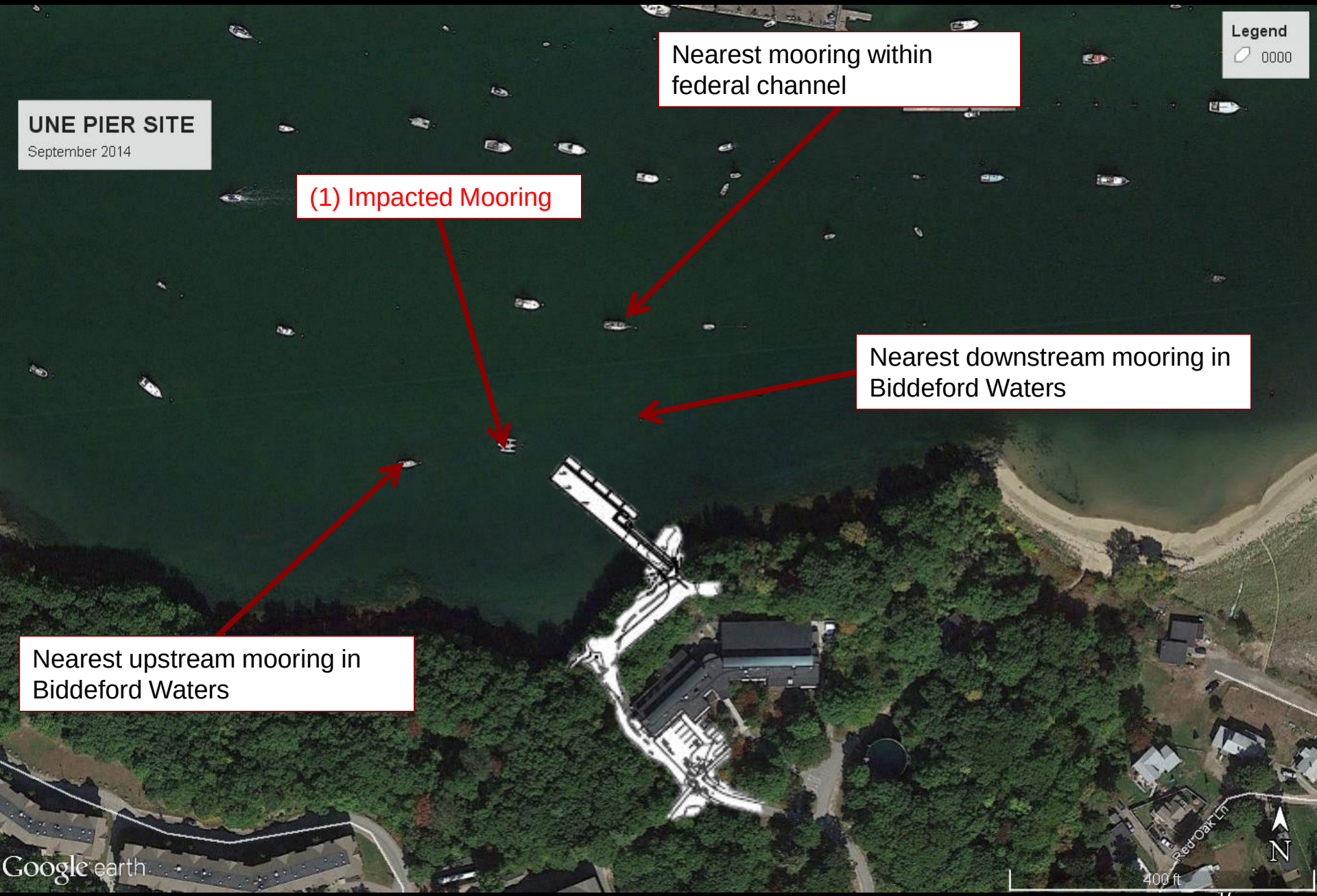
UNE PIER SITE
September 2014
Legend
0000
Nearest mooring within federal channel
(1) Impacted Mooring
Nearest downstream mooring in Biddeford Waters
Nearest upstream mooring in Biddeford Waters
Red Oak Ln
N
400 ft
Google earth


UNE PIER SITE
September 2013
Legend
0000
Red Oak Ln
N
400 ft
Google earth


UNE PIER SITE
May 2012
Legend
0000
Red Oak Ln
N
400 ft
Google earth


UNE PIER SITE
April 2012
Legend
0000
Red Oak Ln
N
400 ft
Google earth


UNE PIER SITE
November 2011
Legend
0000
Red Oak Ln
N
400 ft
Google earth


UNE PIER SITE
May 2010
Legend
0000
Red Oak Ln
N
400 ft
Google earth


UNE PIER SITE
September 2007
Legend
0000
Red Oak Ln
N
400 ft
Google earth


Legend
0000
UNE PIER SITE
October 2006
Red Oak Ln
N
400 ft
Google earth


UNE PIER SITE
April 2006
Legend
0000
Red Oak Ln
N
400 ft
Google earth

Site Photos


Approximate Pier Location
Photo Date: 11/9/2015

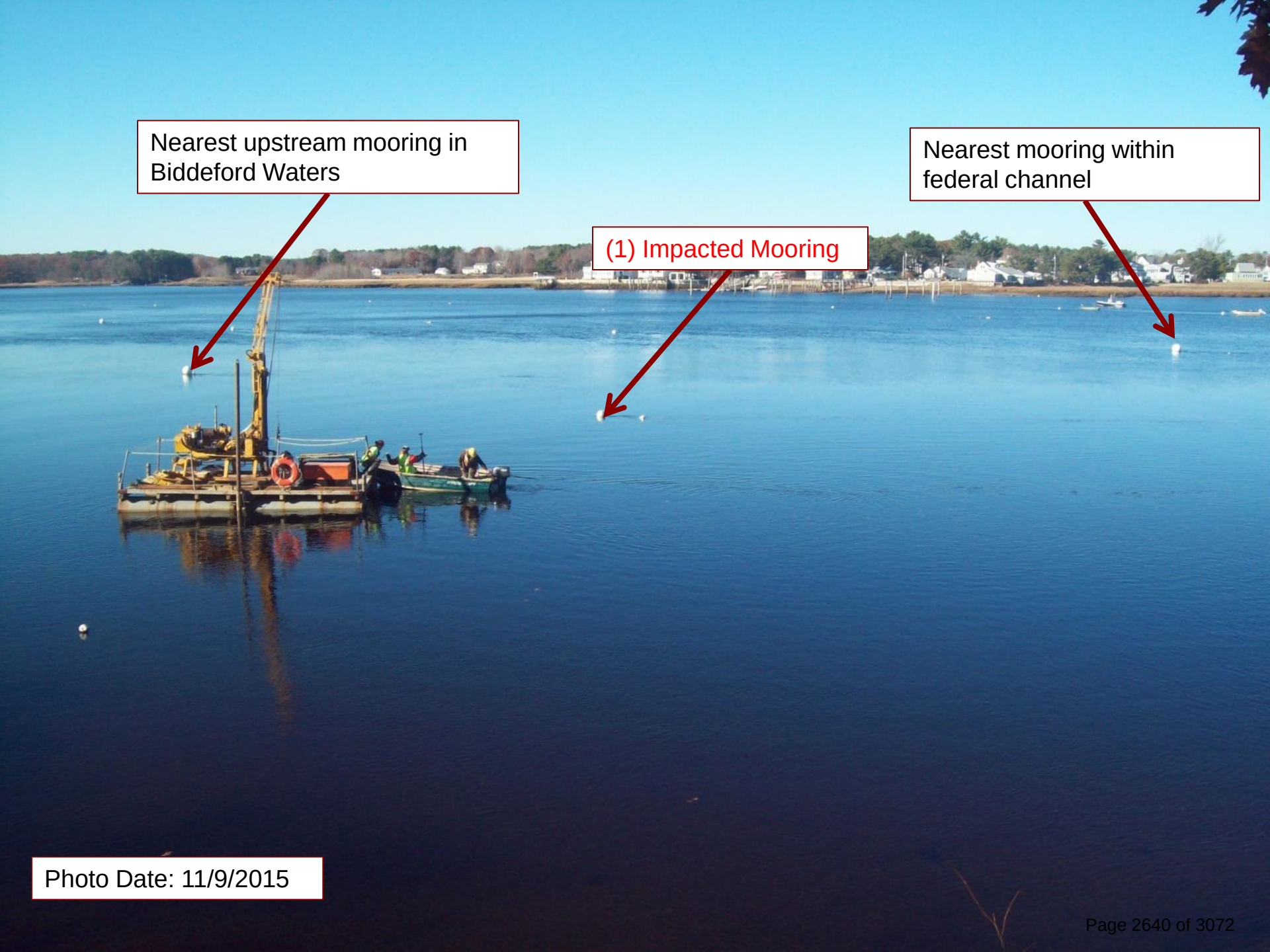
Nearest upstream mooring in Biddeford Waters
(1) Impacted Mooring
Nearest mooring within federal channel
Photo Date: 11/9/2015

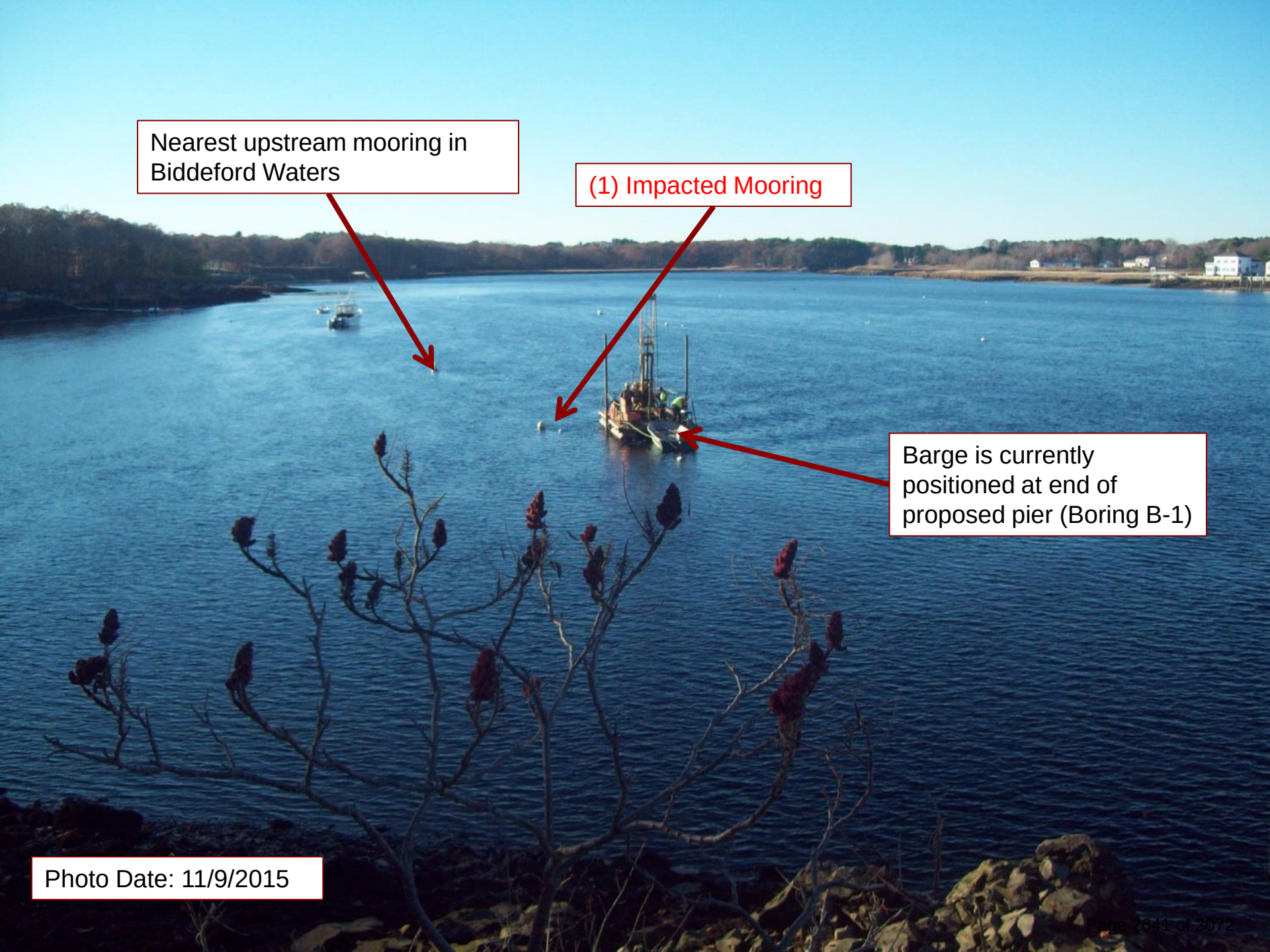
Nearest upstream mooring in Biddeford Waters
(1) Impacted Mooring
Barge is currently positioned at end of proposed pier (Boring B-1)
Photo Date: 11/9/2015


Nearest downstream mooring in Biddeford Waters
Photo Date: 11/9/2015

Tidal & Current Study

Source:

Saco River and Camp Ellis Beach Section 111 Shore Damage Mitigation Study, Appendix C – Data Collection and Modeling Report, prepared by Woods Hole Group and Aubrey Consulting for the US Army Corps of Engineers, October 2006

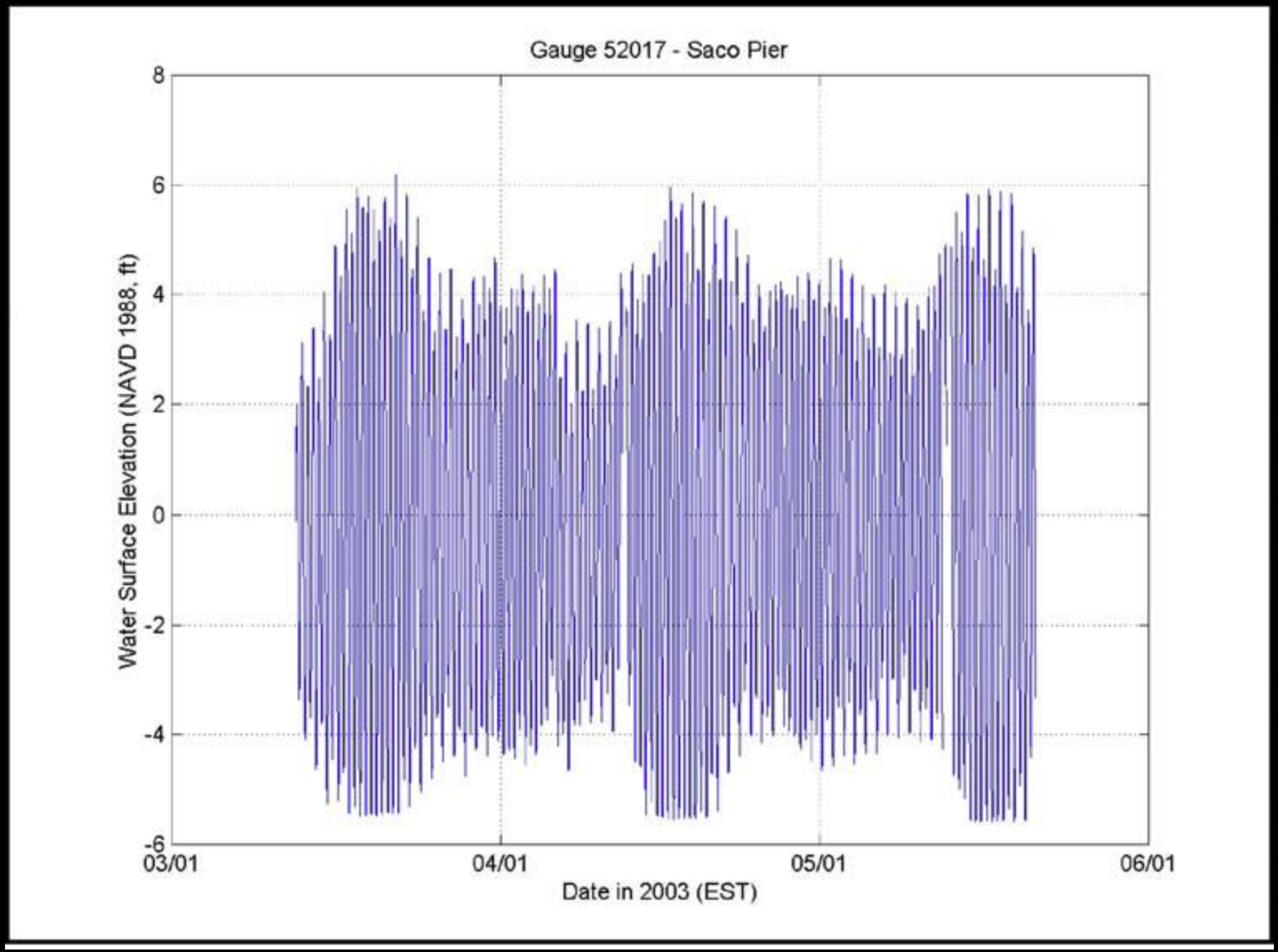
Gauge 52017 - Saco Pier
Water Surface Elevation (NAVD 1988, ft)
8
6
4
2
0
-2
-4
-6
03/01
04/01
05/01
06/01
Date in 2003 (EST)

PROJECT ELEVATIONS (BY DATUM)

ELEVATION	NAVD88 (ft)	Notes
FEMA Base Flood	13.27	FEMA Zone V2
FEMA Base Flood	14.00	Preliminary Zone VE
Highest Annual Tide	6.65	2013 MEDEP Predictions
MHHW	4.65	BASED ON TIDAL BM "Portland"
MHW	4.22	
NAVD88	0.00	
NGVD29		
MLW	-4.91	
MLLW	-5.25	

1. BASE FLOOD INFORMATION TAKEN FROM FEMA FLOOD INSURANCE RATE MAP
2. HIGHEST ANNUAL TIDE TAKEN FROM MAINE DEP PUBLISHED PREDICTIONS
3. TIDAL INFORMATION TAKEN FROM NOAA PUBLISHED DATA

Observations suggest that this location on the Saco River at times sees higher highs and lower lows than the Portland gage for a given tide cycle, possibly due to river influence.

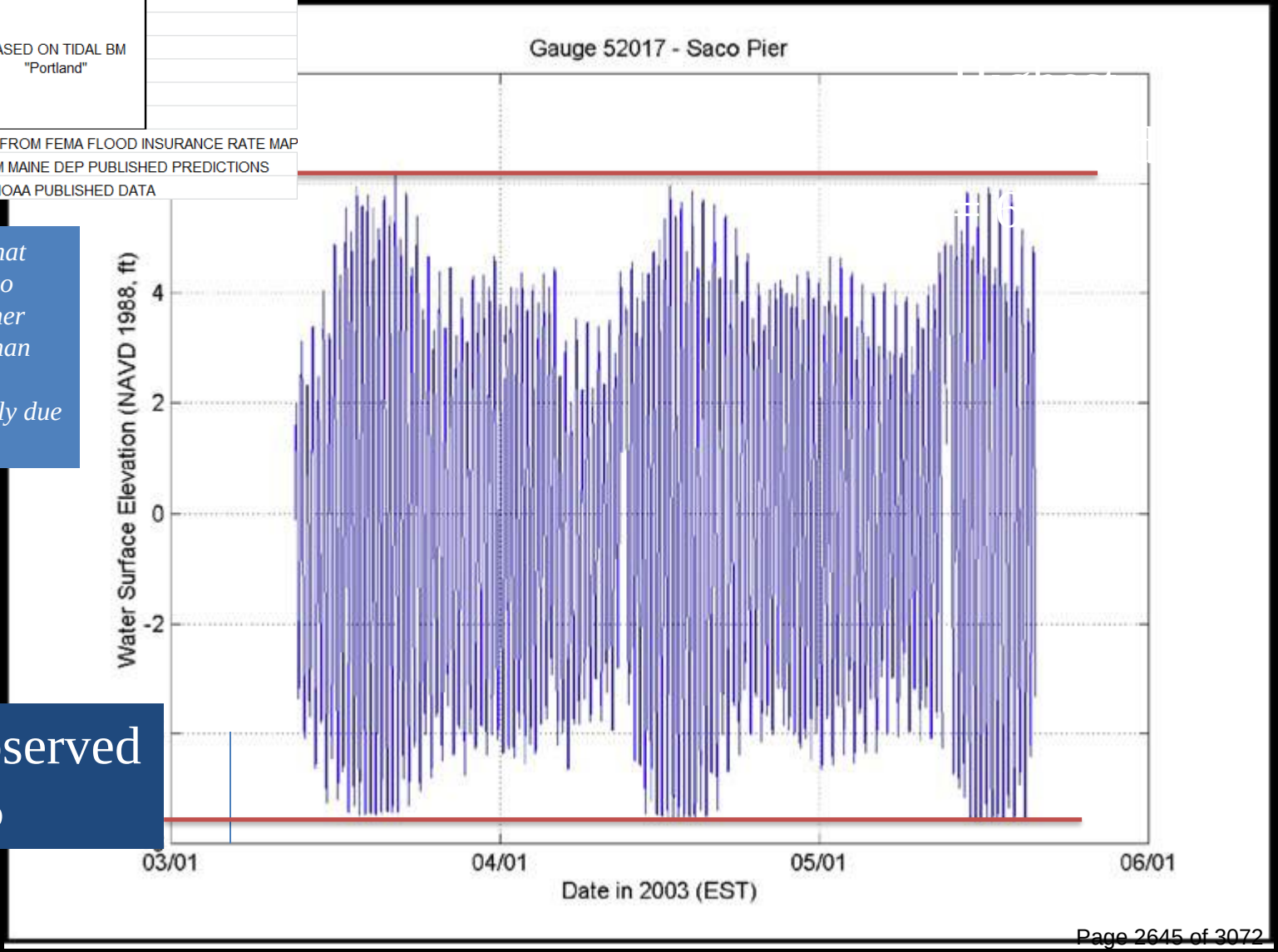

Lowest Observed Tide = -5.6

Table 6-1. Survey dates, locations, repeat interval, and temporal coverage of the ADCP transects.

Location	Transect	Date	Repeat Internal	# of Transects
Inland Jetty	1	May 14	1.5 hrs	9
North Jetty (E-W)	2	May 14	1.5 hrs	9
North Jetty (W-E)	3	May 14	1.5 hrs	6
Alongshore	4	May 14	1.5 hrs	5
Shore to end North Jetty	5	May 14	1.5 hrs	6
North Jetty to South Jetty	6	May 14	1.5 hrs	9
Jettied Channel	7	May 14	1.0 hrs during low tide	2

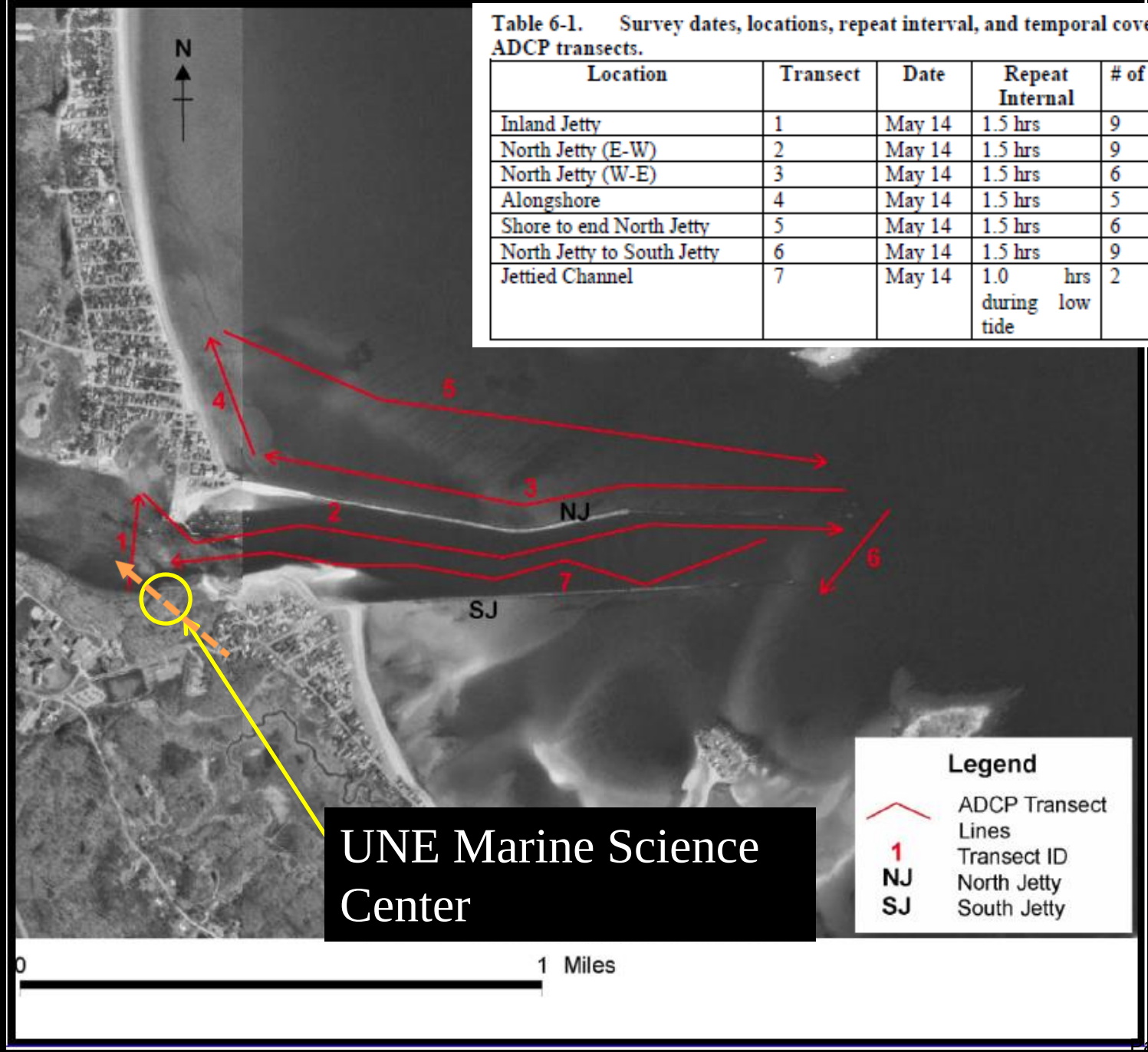

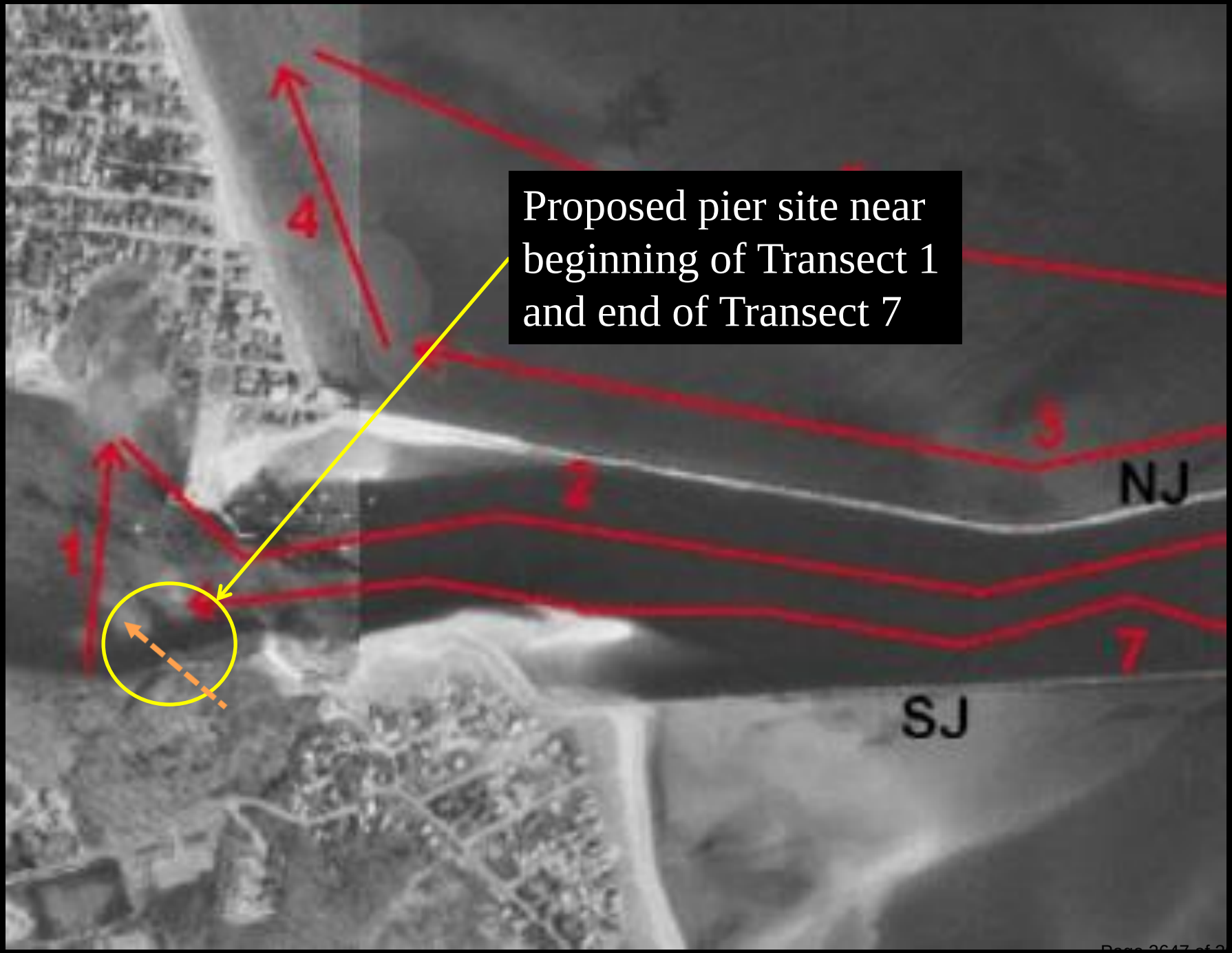
Proposed pier site near beginning of Transect 1 and end of Transect 7
NJ
SJ
1
4
3
7

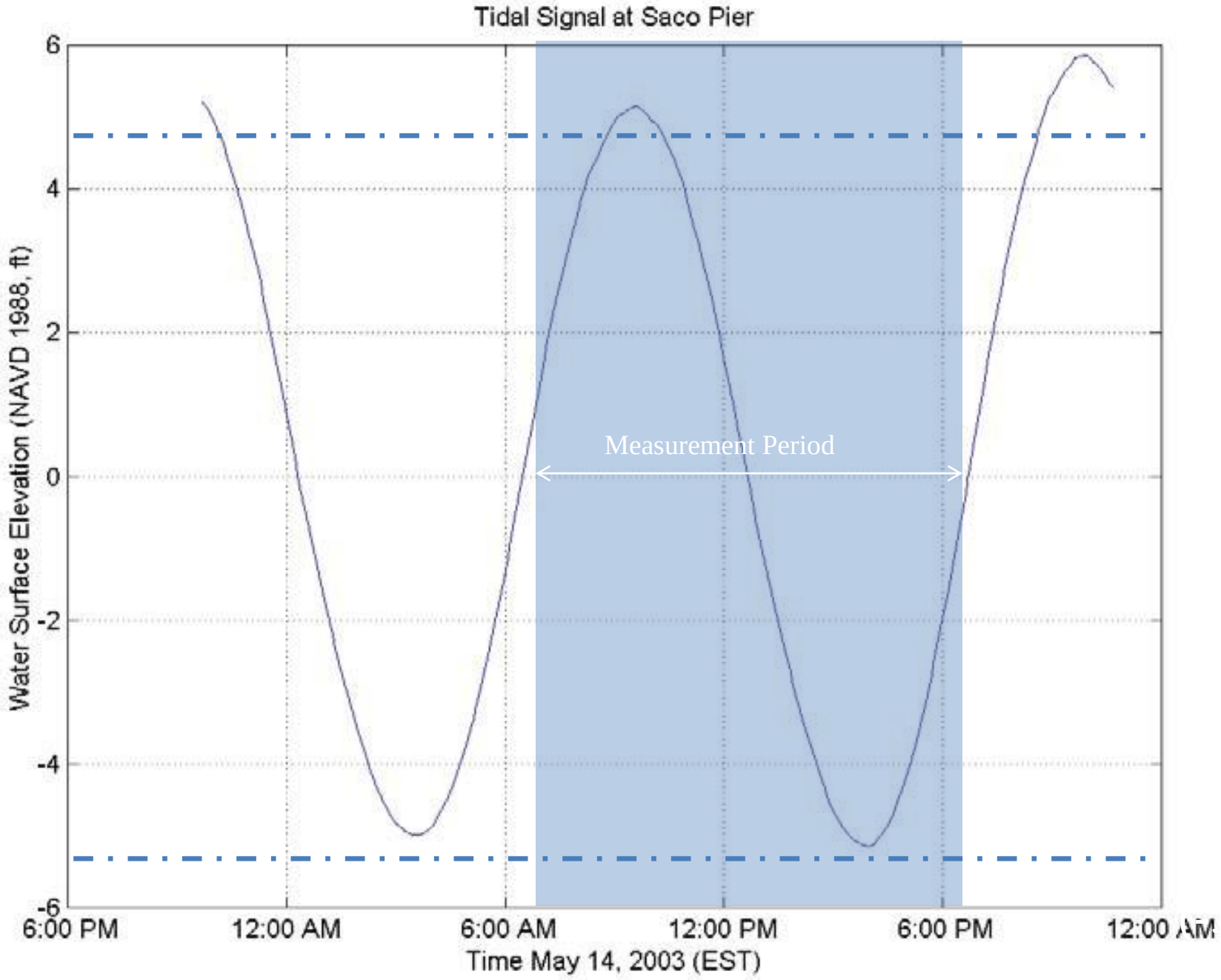
Tidal Signal at Saco Pier
Water Surface Elevation (NAVD 1988, ft)
6
4
2
0
-2
-4
-6
Measurement Period
6:00 PM
12:00 AM
6:00 AM
12:00 PM
6:00 PM
12:00 AM
Time May 14, 2003 (EST)

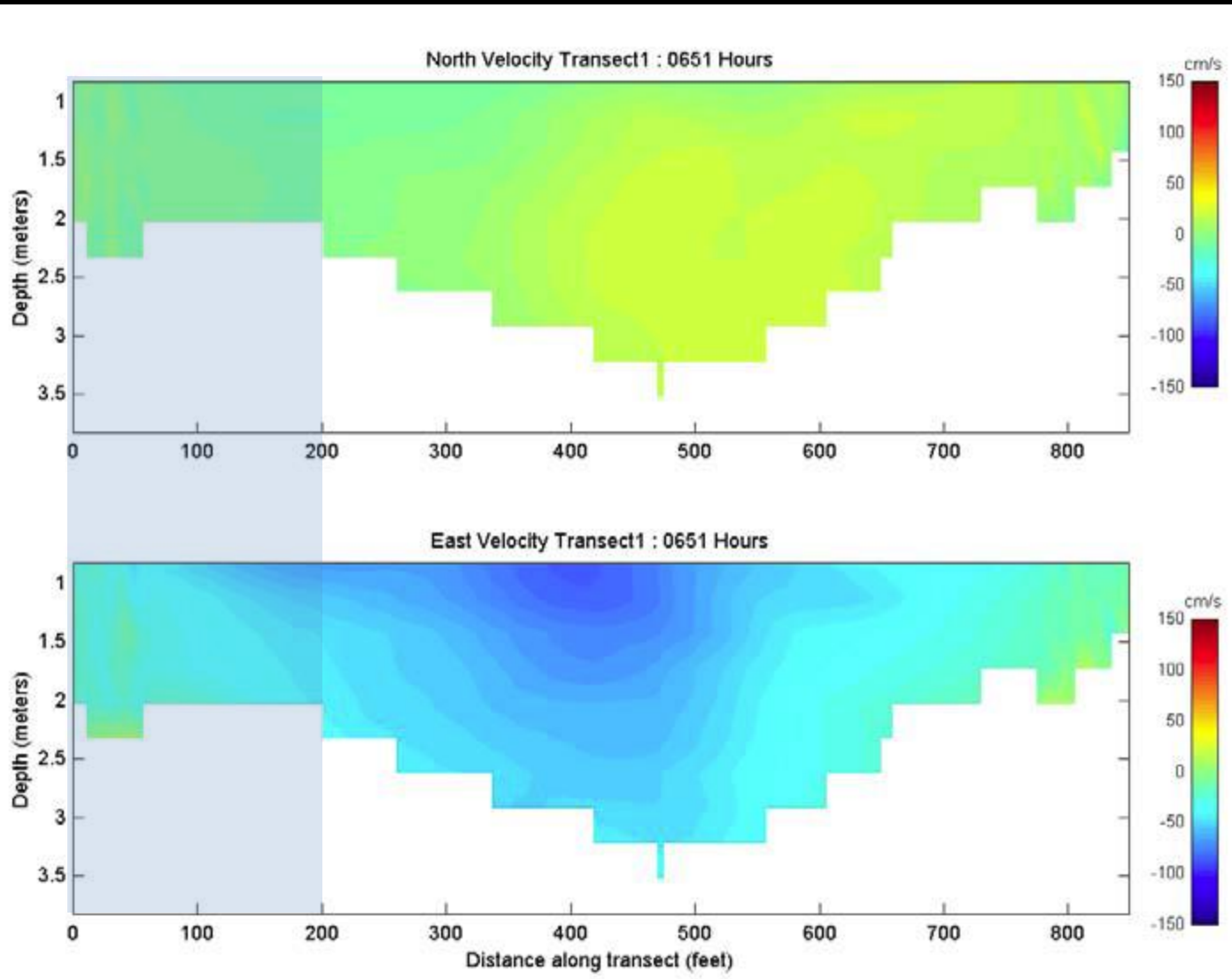
North Velocity Transect1 : 0651 Hours
Depth (meters)
1
1.5
2
2.5
3
3.5
0
100
200
300
400
500
600
700
800
cm/s
150
100
50
0
-50
-100
-150
East Velocity Transect1 : 0651 Hours
Depth (meters)
Distance along transect (feet)

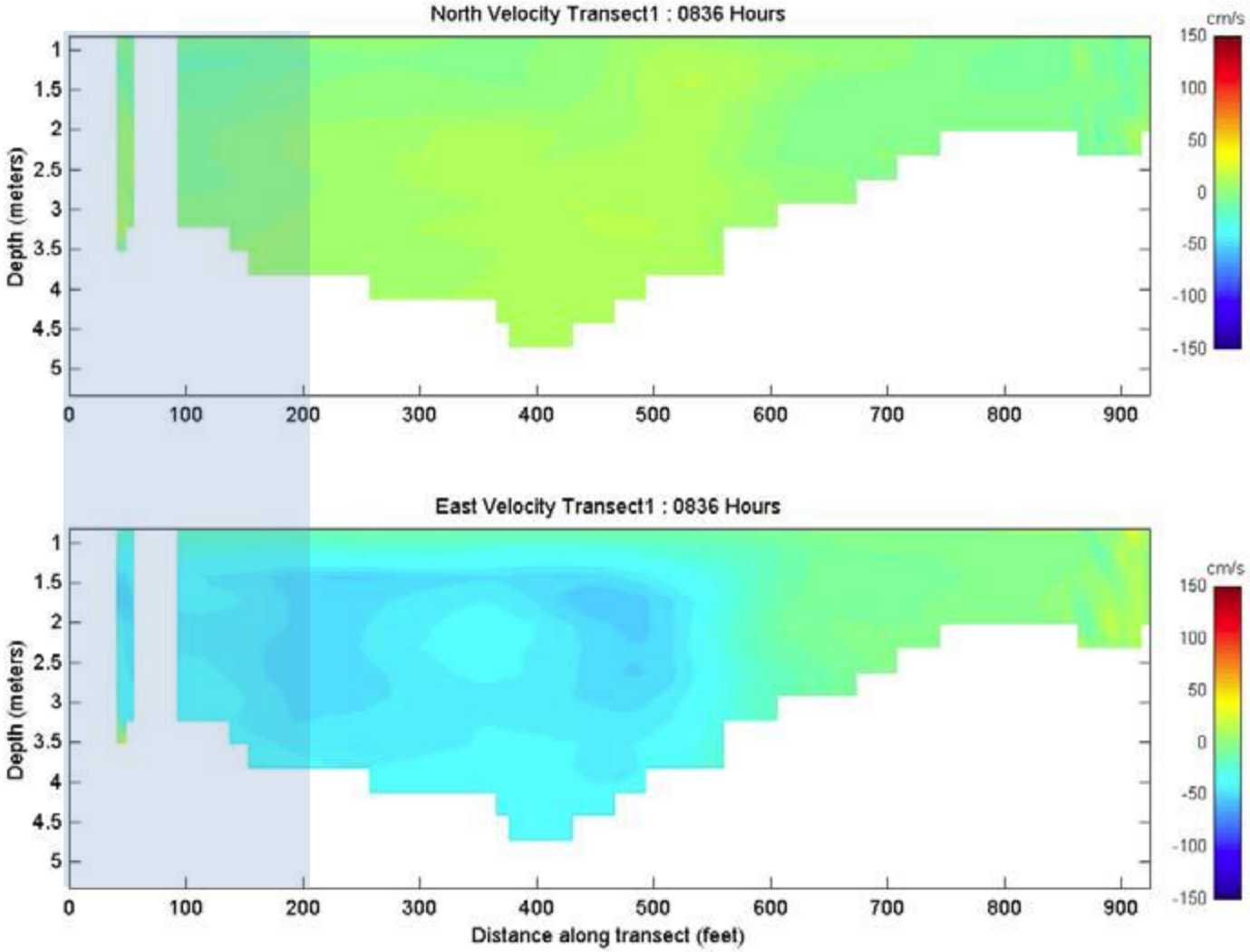
North Velocity Transect1 : 0836 Hours
Depth (meters)
1
1.5
2
2.5
3
3.5
4
4.5
5
0
100
200
300
400
500
600
700
800
900
cm/s
150
100
50
0
-50
-100
-150
East Velocity Transect1 : 0836 Hours
Depth (meters)
Distance along transect (feet)

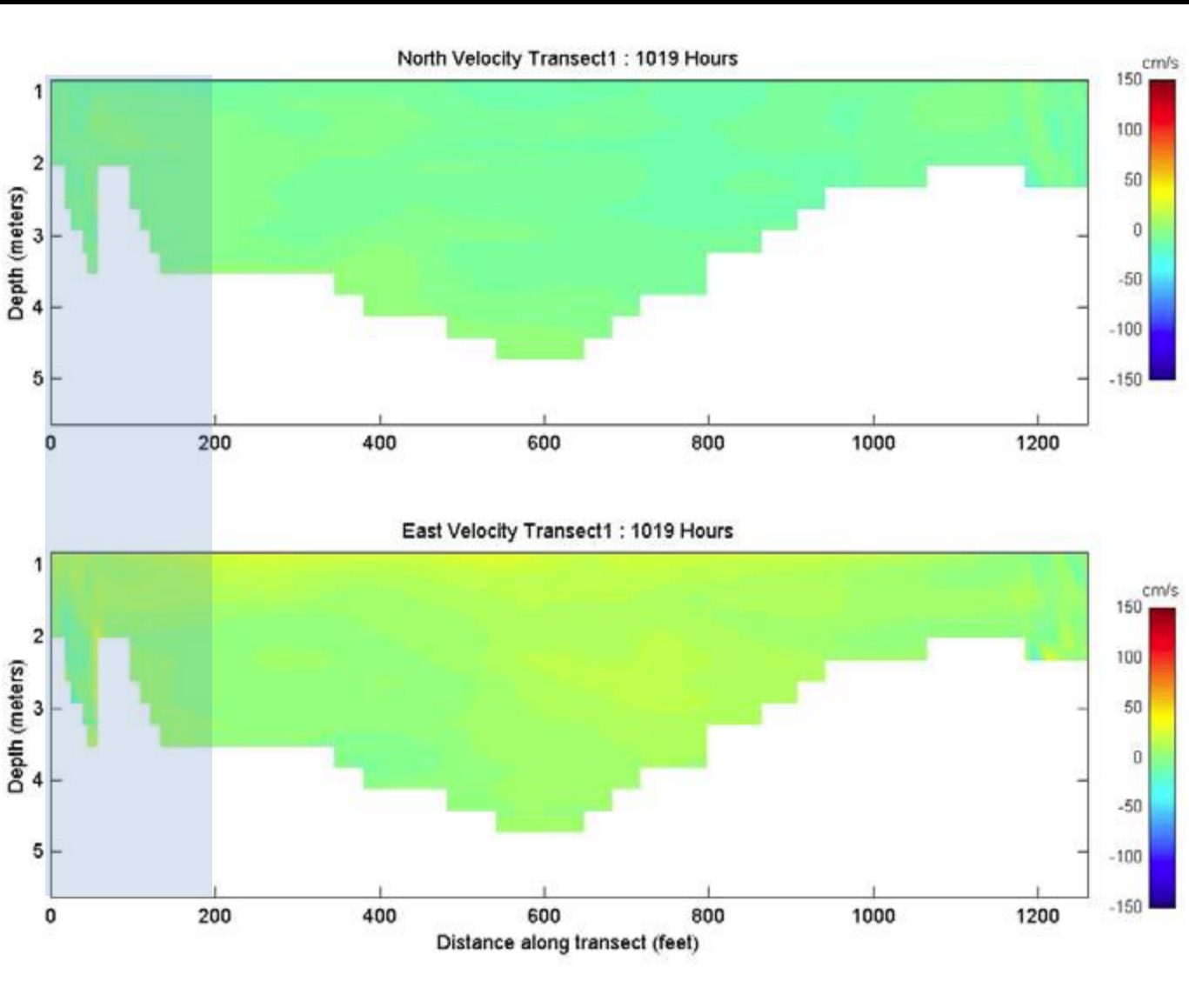
North Velocity Transect1 : 1019 Hours
Depth (meters)
1
2
3
4
5
0
200
400
600
800
1000
1200
cm/s
150
100
50
0
-50
-100
-150
East Velocity Transect1 : 1019 Hours
Depth (meters)
Distance along transect (feet)

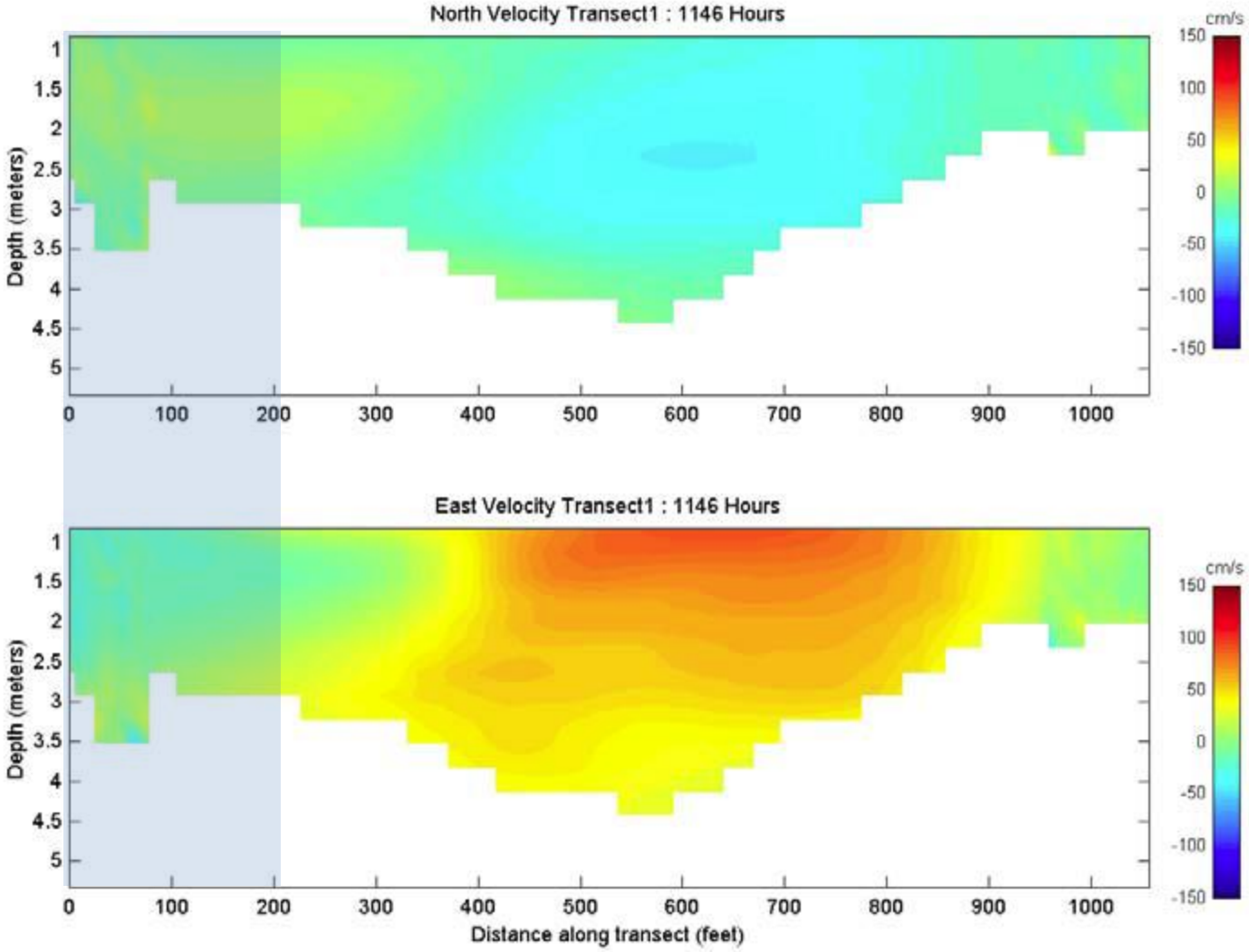
North Velocity Transect1 : 1146 Hours
East Velocity Transect1 : 1146 Hours
Depth (meters)
Distance along transect (feet)
cm/s
150
100
50
0
-50
-100
-150
1
1.5
2
2.5
3
3.5
4
4.5
5
0
100
200
300
400
500
600
700
800
900
1000

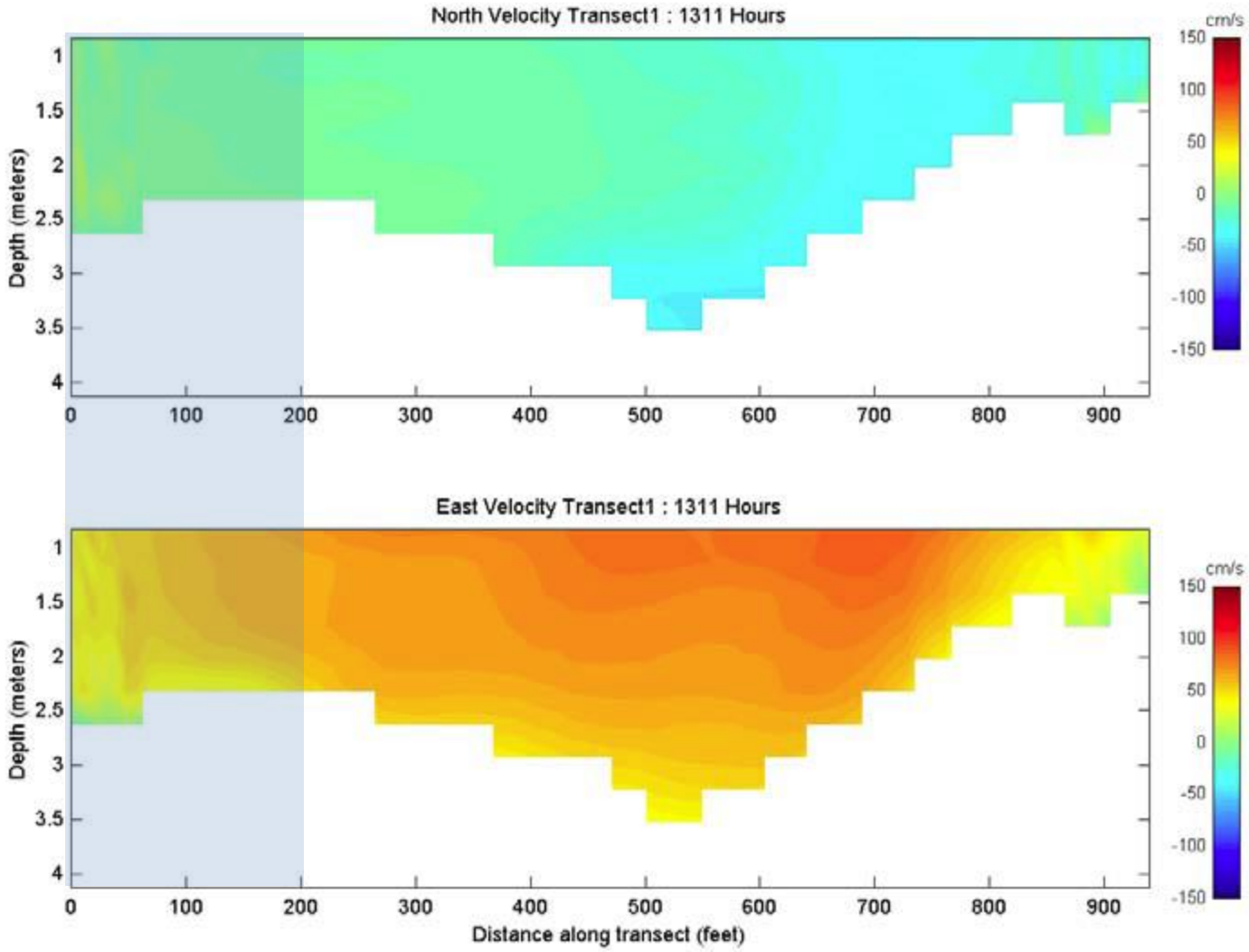
North Velocity Transect1 : 1311 Hours
Depth (meters)
1
1.5
2
2.5
3
3.5
4
0
100
200
300
400
500
600
700
800
900
cm/s
150
100
50
0
-50
-100
-150
East Velocity Transect1 : 1311 Hours
Depth (meters)
Distance along transect (feet)

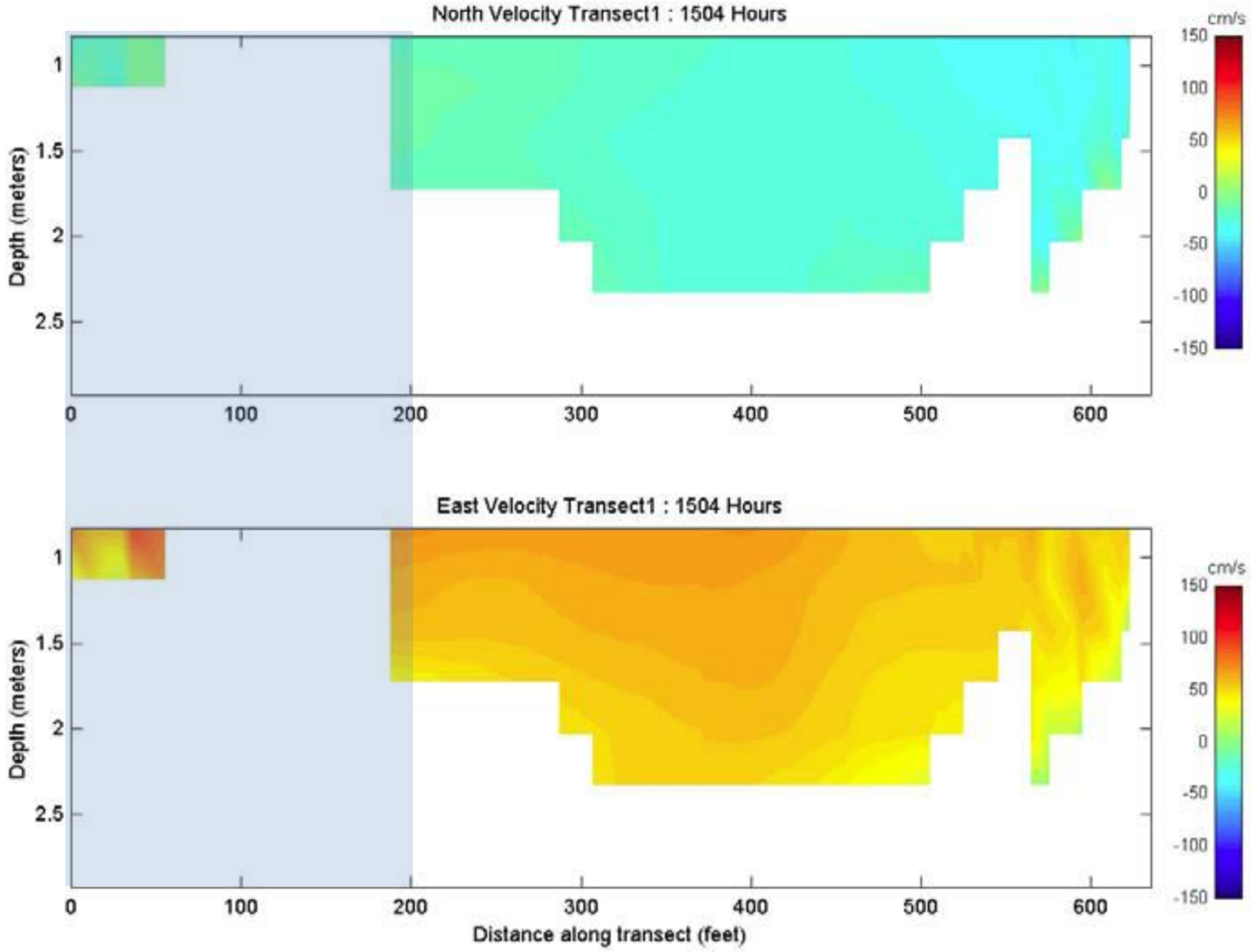
North Velocity Transect1 : 1504 Hours
Depth (meters)
1
1.5
2
2.5
0
100
200
300
400
500
600
cm/s
150
100
50
0
-50
-100
-150
East Velocity Transect1 : 1504 Hours
Depth (meters)
1
1.5
2
2.5
0
100
200
300
400
500
600
Distance along transect (feet)
cm/s
150
100
50
0
-50
-100
-150

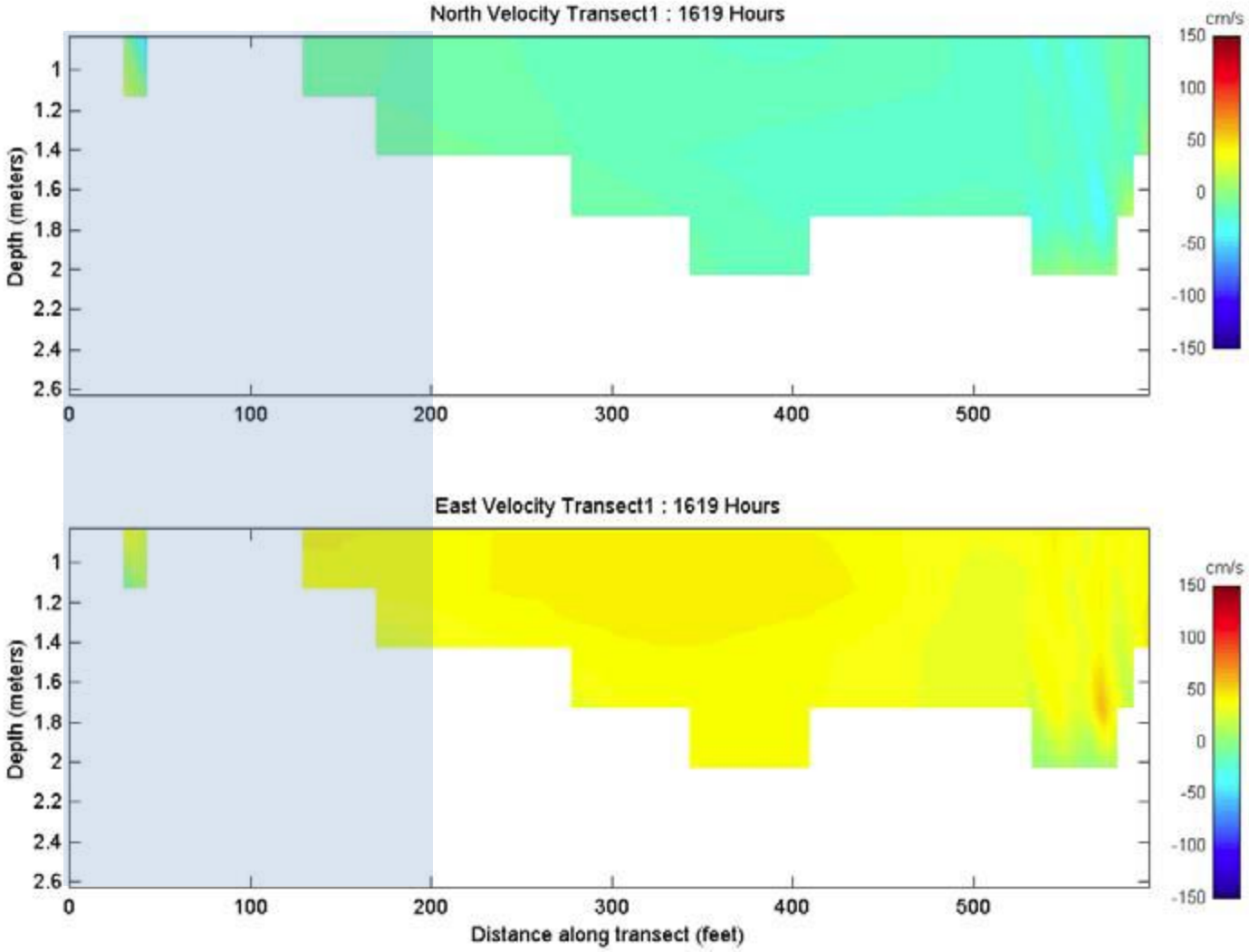
North Velocity Transect1 : 1619 Hours
Depth (meters)
1
1.2
1.4
1.6
1.8
2
2.2
2.4
2.6
0
100
200
300
400
500
cm/s
150
100
50
0
-50
-100
-150
East Velocity Transect1 : 1619 Hours
Depth (meters)
Distance along transect (feet)

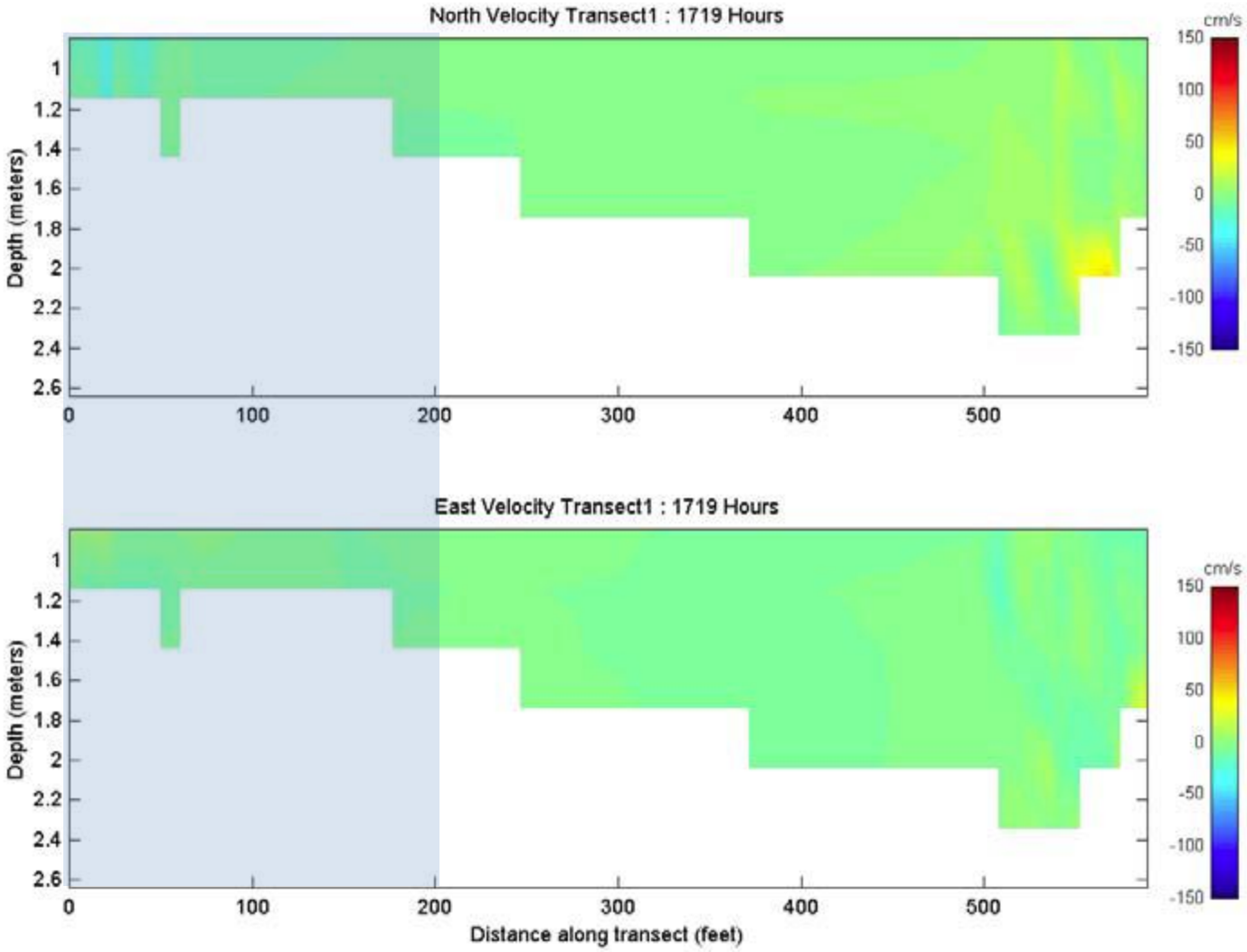
North Velocity Transect1 : 1719 Hours
Depth (meters)
1
1.2
1.4
1.6
1.8
2
2.2
2.4
2.6
0
100
200
300
400
500
cm/s
150
100
50
0
-50
-100
-150
East Velocity Transect1 : 1719 Hours
Depth (meters)
Distance along transect (feet)

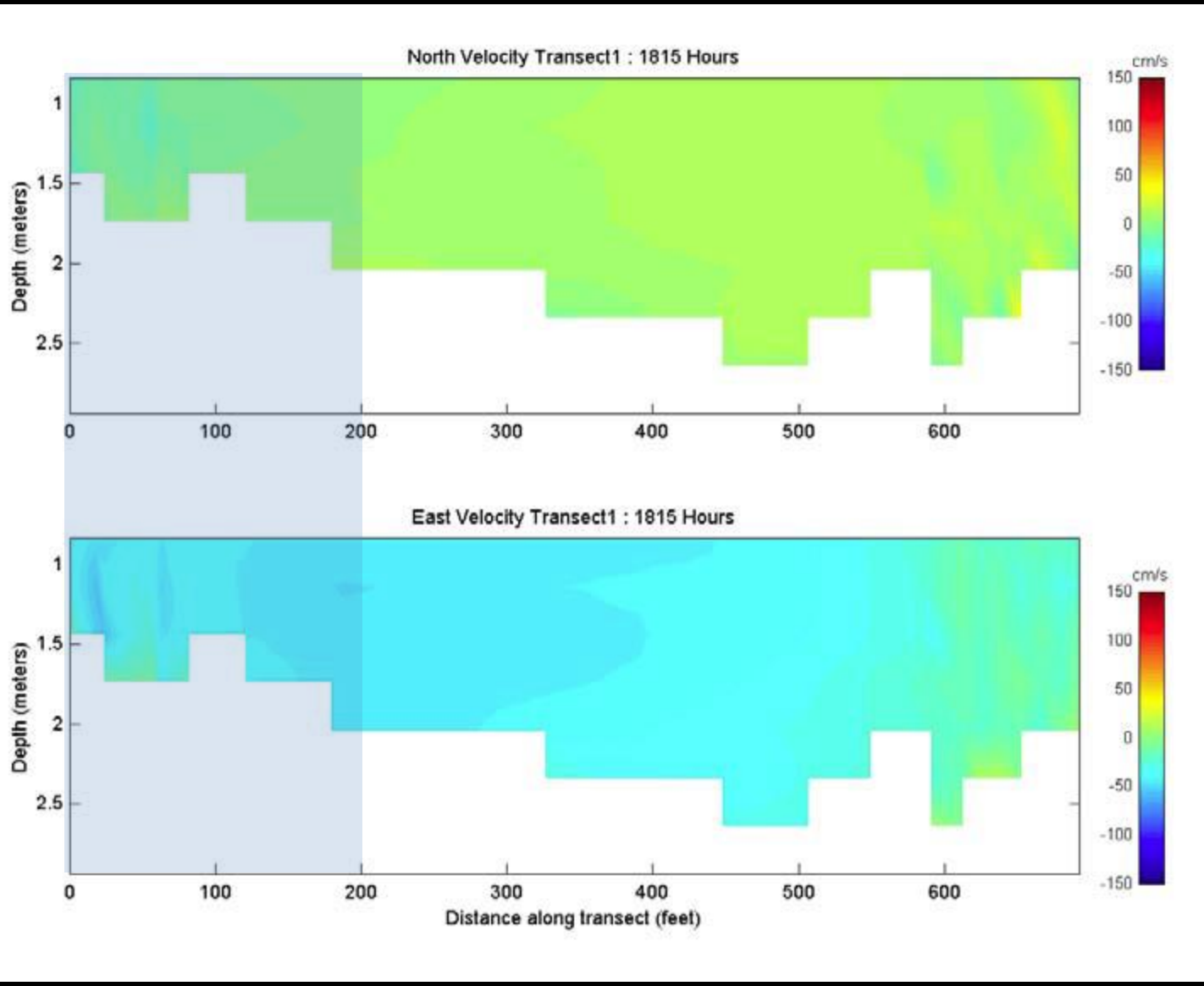
North Velocity Transect1 : 1815 Hours
Depth (meters)
1
1.5
2
2.5
0
100
200
300
400
500
600
cm/s
150
100
50
0
-50
-100
-150
East Velocity Transect1 : 1815 Hours
Depth (meters)
Distance along transect (feet)

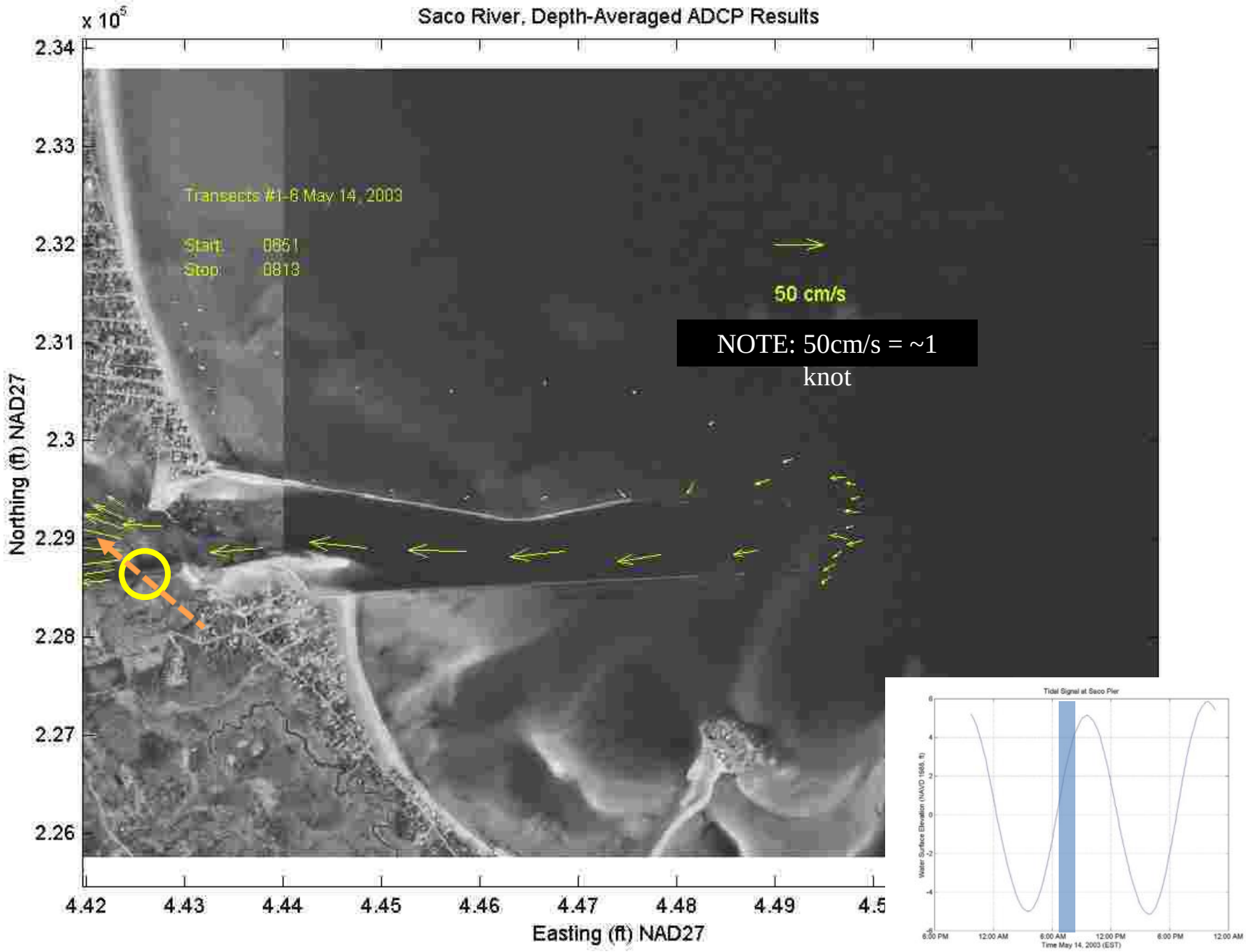
Saco River, Depth-Averaged ADCP Results
x 10^5
2.34
2.33
2.32
2.31
2.3
2.29
2.28
2.27
2.26
Northing (ft) NAD27
Transects #1-8 May 14, 2003
Start 0851
Stop 0813
50 cm/s
NOTE: 50cm/s = ~1 knot
4.42
4.43
4.44
4.45
4.46
4.47
4.48
4.49
4.5
Easting (ft) NAD27
Tidal Signal at Saco Pier
Water Surface Elevation (NAVD 1988, ft)
6
4
2
0
-2
-4
-6
6:00 PM
12:00 AM
6:00 AM
12:00 PM
6:00 PM
12:00 AM
Time May 14, 2003 (EST)

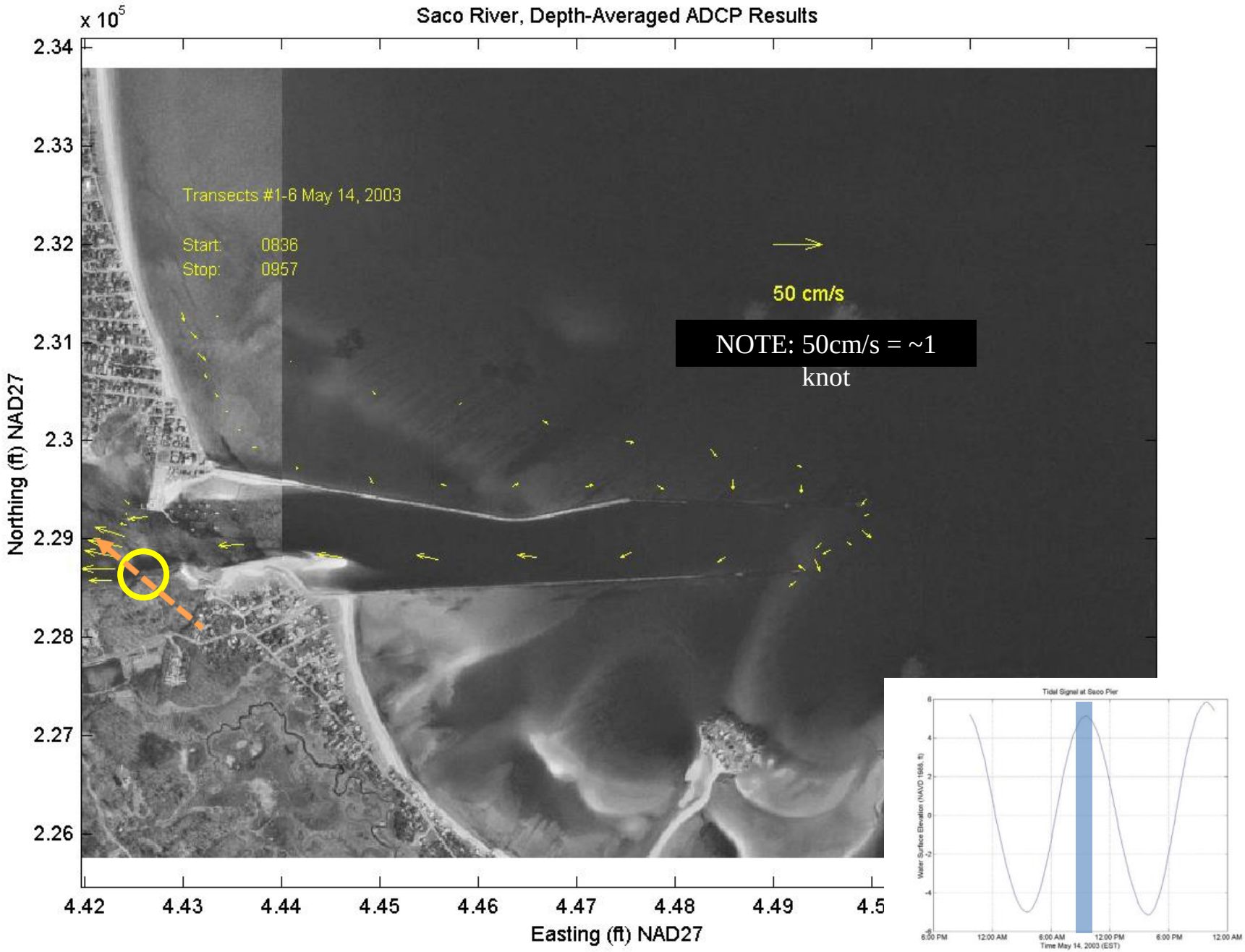
Saco River, Depth-Averaged ADCP Results
x 10^5
Transects #1-6 May 14, 2003
Start: 0836
Stop: 0957
50 cm/s
NOTE: 50cm/s = ~1 knot
Northing (ft) NAD27
Easting (ft) NAD27
2.34
2.33
2.32
2.31
2.3
2.29
2.28
2.27
2.26
4.42
4.43
4.44
4.45
4.46
4.47
4.48
4.49
4.5
Tidal Signal at Saco Pier
Water Surface Elevation (NAVD 1988, ft)
6:00 PM
12:00 AM
6:00 AM
12:00 PM
6:00 PM
12:00 AM
Time May 14, 2003 (EST)

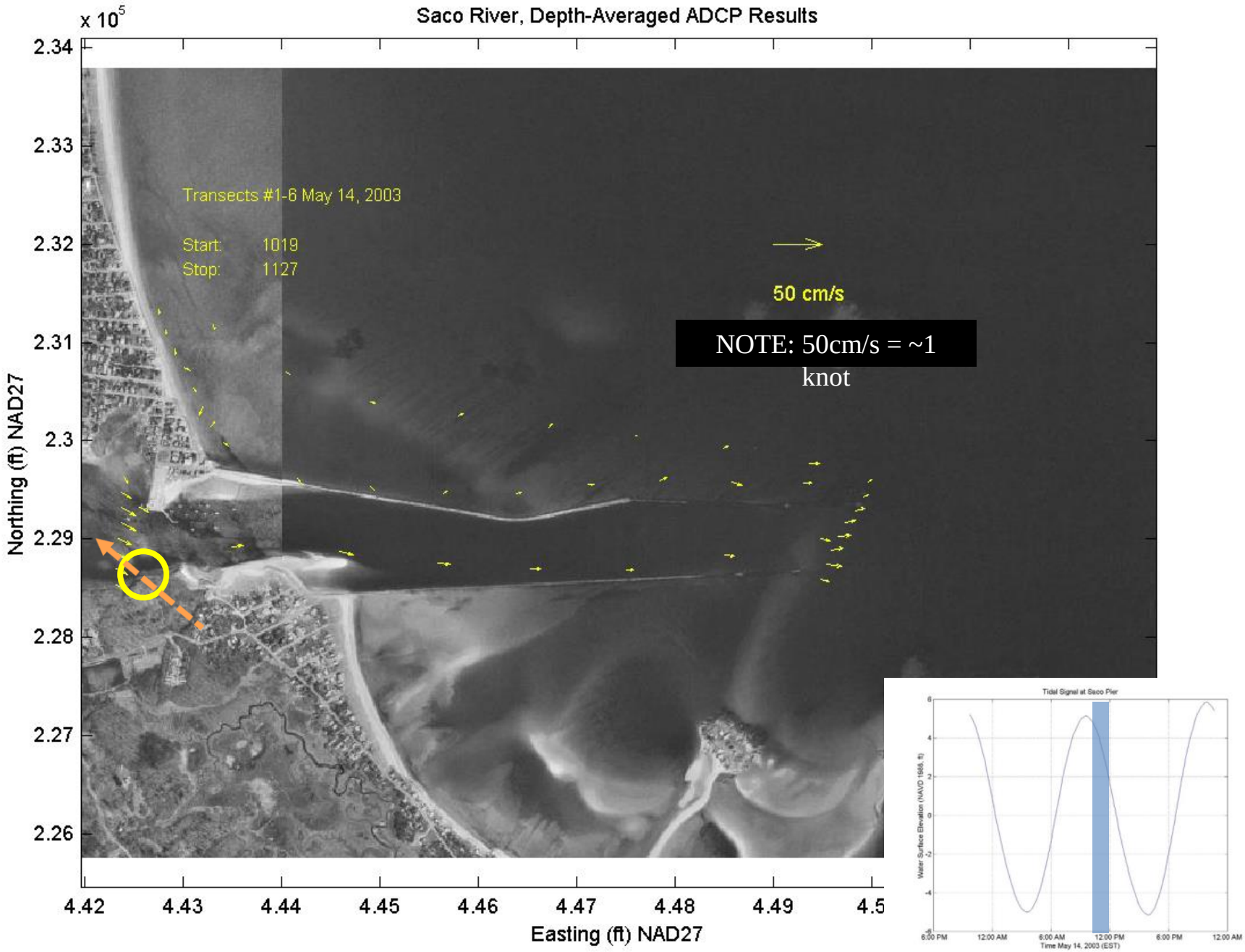
Saco River, Depth-Averaged ADCP Results
x 10^5
2.34
2.33
2.32
2.31
2.3
2.29
2.28
2.27
2.26
Northing (ft) NAD27
Transects #1-6 May 14, 2003
Start: 1019
Stop: 1127
50 cm/s
NOTE: 50cm/s = ~1 knot
4.42
4.43
4.44
4.45
4.46
4.47
4.48
4.49
4.5
Easting (ft) NAD27
Tidal Signal at Saco Pier
Water Surface Elevation (NAVD 1988, ft)
6:00 PM
12:00 AM
6:00 AM
12:00 PM
6:00 PM
12:00 AM
Time May 14, 2003 (EST)

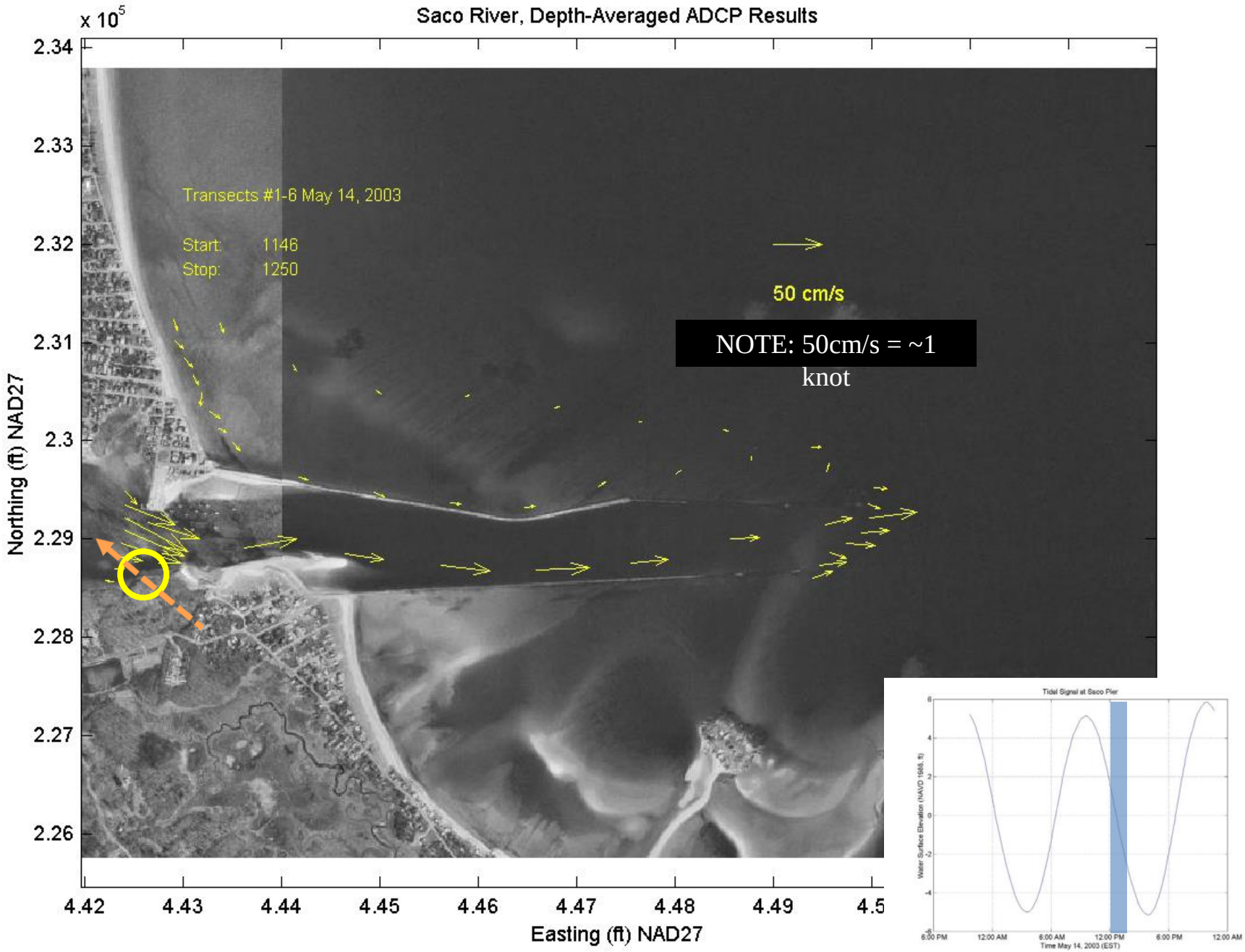
Saco River, Depth-Averaged ADCP Results
x 10^5
2.34
2.33
2.32
2.31
2.3
2.29
2.28
2.27
2.26
Northing (ft) NAD27
Transects #1-6 May 14, 2003
Start: 1146
Stop: 1250
50 cm/s
NOTE: 50cm/s = ~1 knot
4.42
4.43
4.44
4.45
4.46
4.47
4.48
4.49
4.5
Easting (ft) NAD27
Tidal Signal at Saco Pier
Water Surface Elevation (NAVD 1988, ft)
6
4
2
0
-2
-4
-6
6:00 PM
12:00 AM
6:00 AM
12:00 PM
6:00 PM
12:00 AM
Time May 14, 2003 (EST)

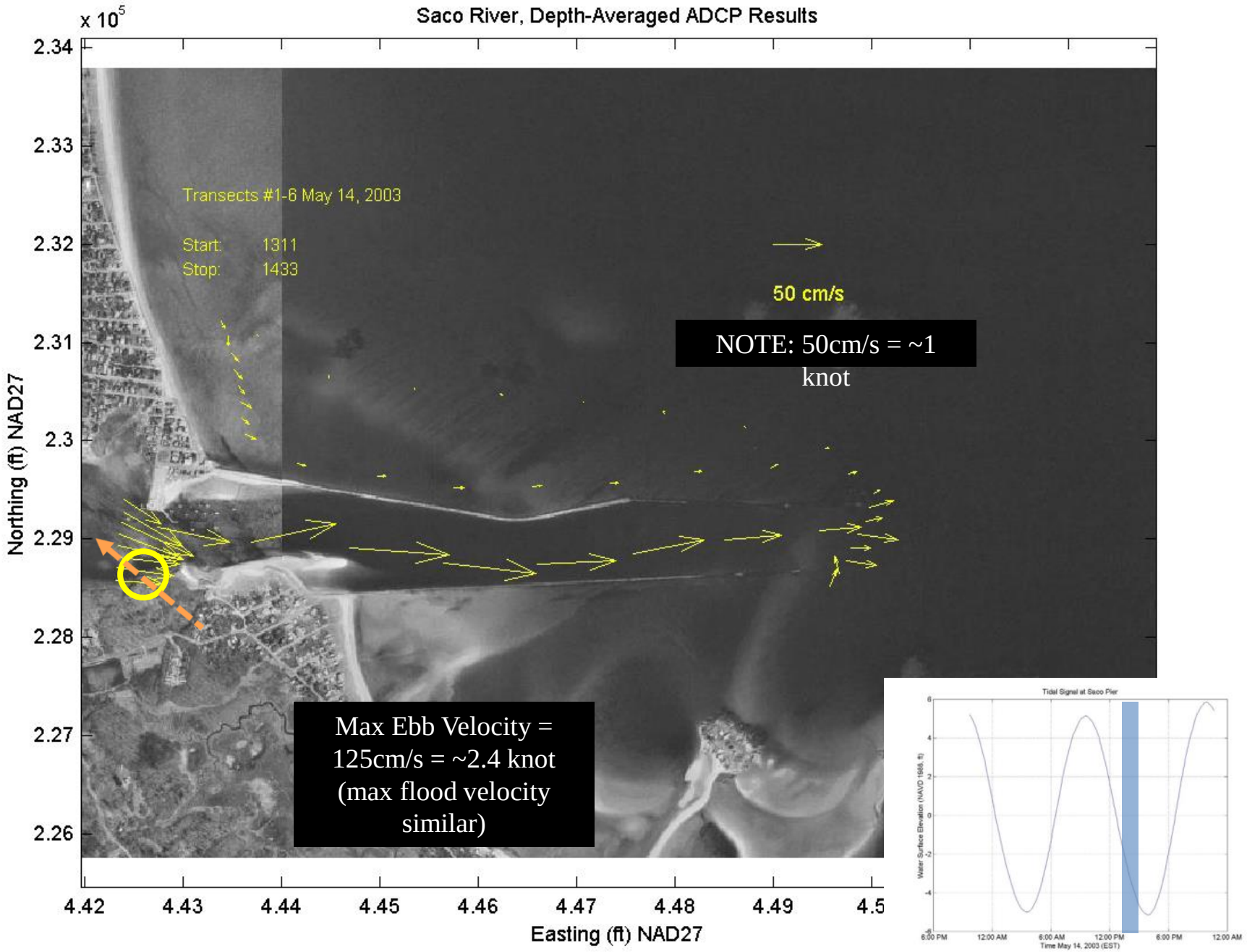
Saco River, Depth-Averaged ADCP Results
x 10^5
Transects #1-6 May 14, 2003
Start: 1311
Stop: 1433
50 cm/s
NOTE: 50cm/s = ~1 knot
Max Ebb Velocity = 125cm/s = ~2.4 knot (max flood velocity similar)
Northing (ft) NAD27
Easting (ft) NAD27
2.34
2.33
2.32
2.31
2.3
2.29
2.28
2.27
2.26
4.42
4.43
4.44
4.45
4.46
4.47
4.48
4.49
4.5
Tidal Signal at Saco Pier
Water Surface Elevation (NAVD 1988, ft)
6:00 PM
12:00 AM
6:00 AM
12:00 PM
6:00 PM
12:00 AM
Time May 14, 2003 (EST)

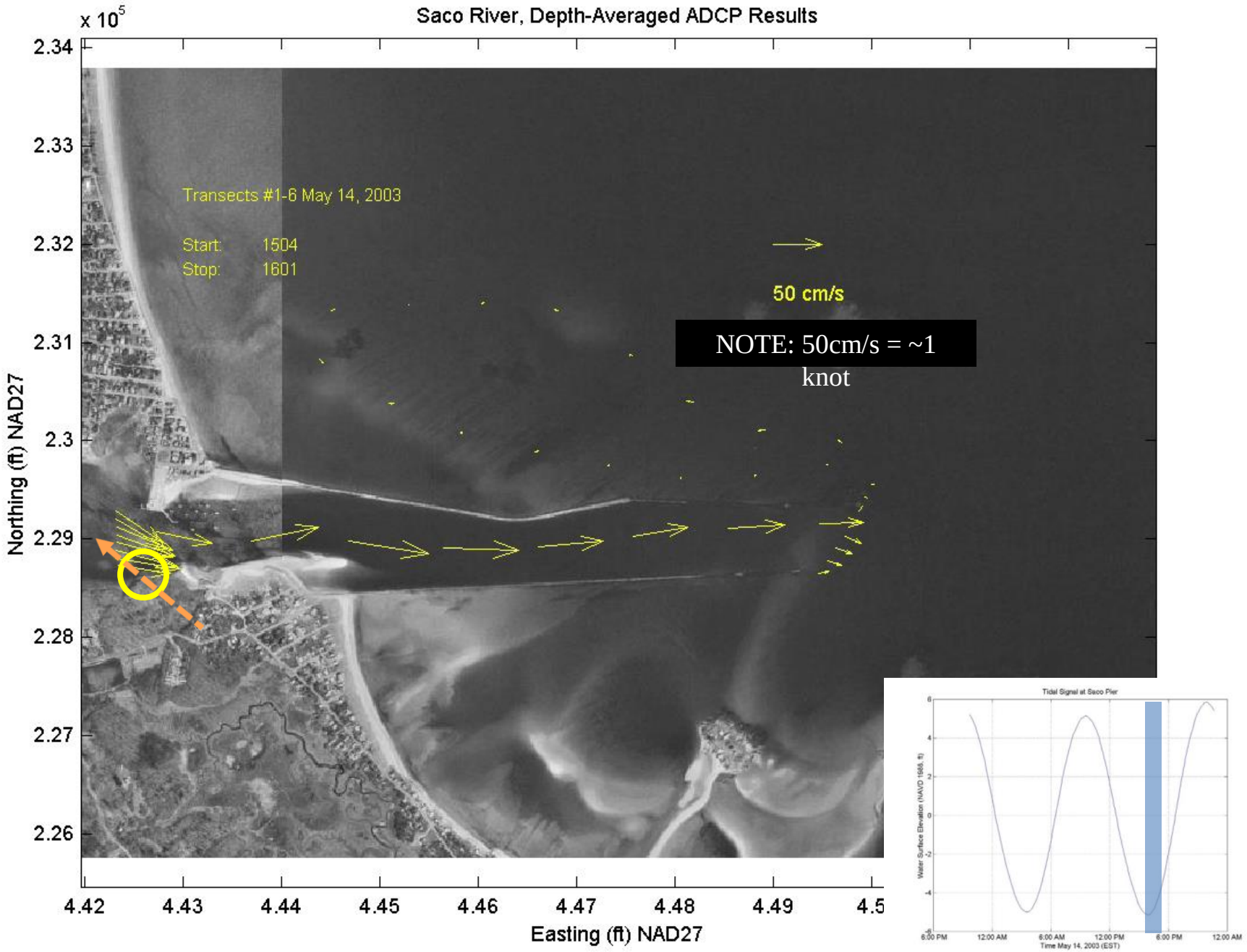
Saco River, Depth-Averaged ADCP Results
x 10^5
Transects #1-6 May 14, 2003
Start: 1504
Stop: 1601
50 cm/s
NOTE: 50cm/s = ~1 knot
Northing (ft) NAD27
Easting (ft) NAD27
2.34
2.33
2.32
2.31
2.3
2.29
2.28
2.27
2.26
4.42
4.43
4.44
4.45
4.46
4.47
4.48
4.49
4.5
Tidal Signal at Saco Pier
Water Surface Elevation (NAVD 1988, ft)
6:00 PM
12:00 AM
6:00 AM
12:00 PM
6:00 PM
12:00 AM
Time May 14, 2003 (EST)

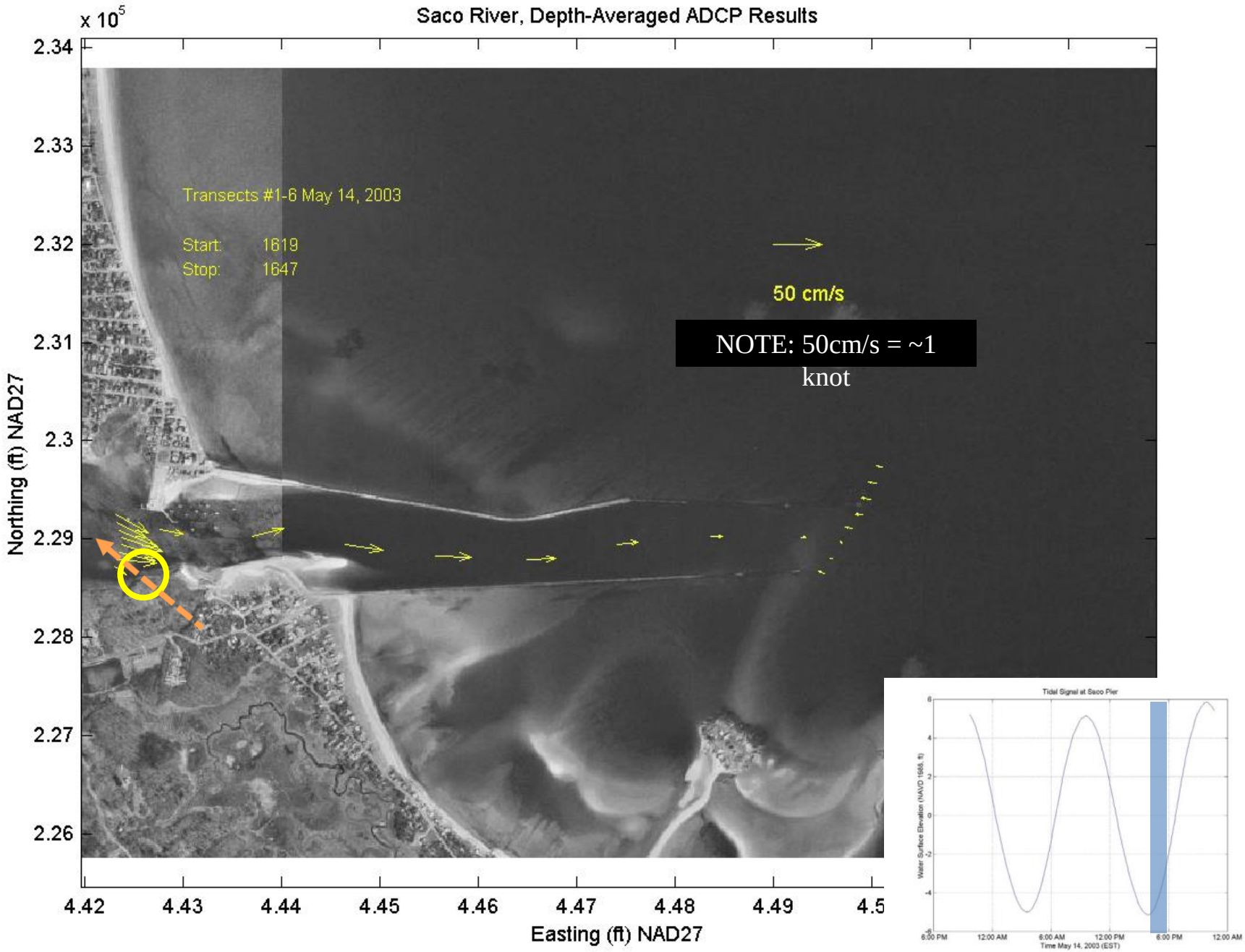
Saco River, Depth-Averaged ADCP Results
x 10^5
Transects #1-6 May 14, 2003
Start: 1619
Stop: 1647
50 cm/s
NOTE: 50cm/s = ~1 knot
Northing (ft) NAD27
Easting (ft) NAD27
2.34
2.33
2.32
2.31
2.3
2.29
2.28
2.27
2.26
4.42
4.43
4.44
4.45
4.46
4.47
4.48
4.49
4.5
Tidal Signal at Saco Pier
Water Surface Elevation (NAVD 1988, ft)
6:00 PM
12:00 AM
6:00 AM
12:00 PM
6:00 PM
12:00 AM
Time May 14, 2003 (EST)

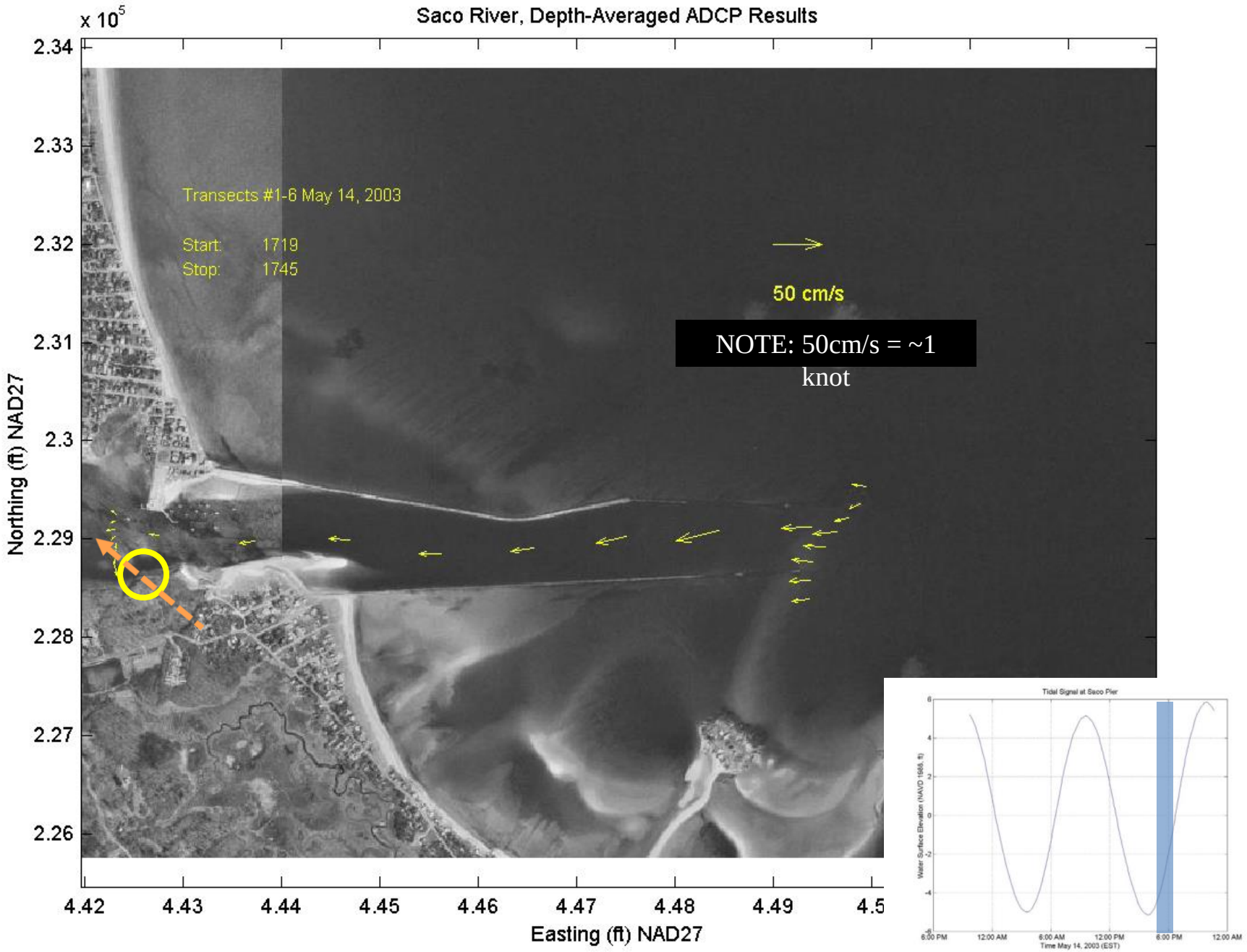
Saco River, Depth-Averaged ADCP Results
x 10^5
Transects #1-6 May 14, 2003
Start: 1719
Stop: 1745
50 cm/s
NOTE: 50cm/s = ~1 knot
Northing (ft) NAD27
Easting (ft) NAD27
2.34
2.33
2.32
2.31
2.3
2.29
2.28
2.27
2.26
4.42
4.43
4.44
4.45
4.46
4.47
4.48
4.49
4.5
Tidal Signal at Saco Pier
Water Surface Elevation (NAVD 1988, ft)
6:00 PM
12:00 AM
6:00 AM
12:00 PM
6:00 PM
12:00 AM
Time May 14, 2003 (EST)

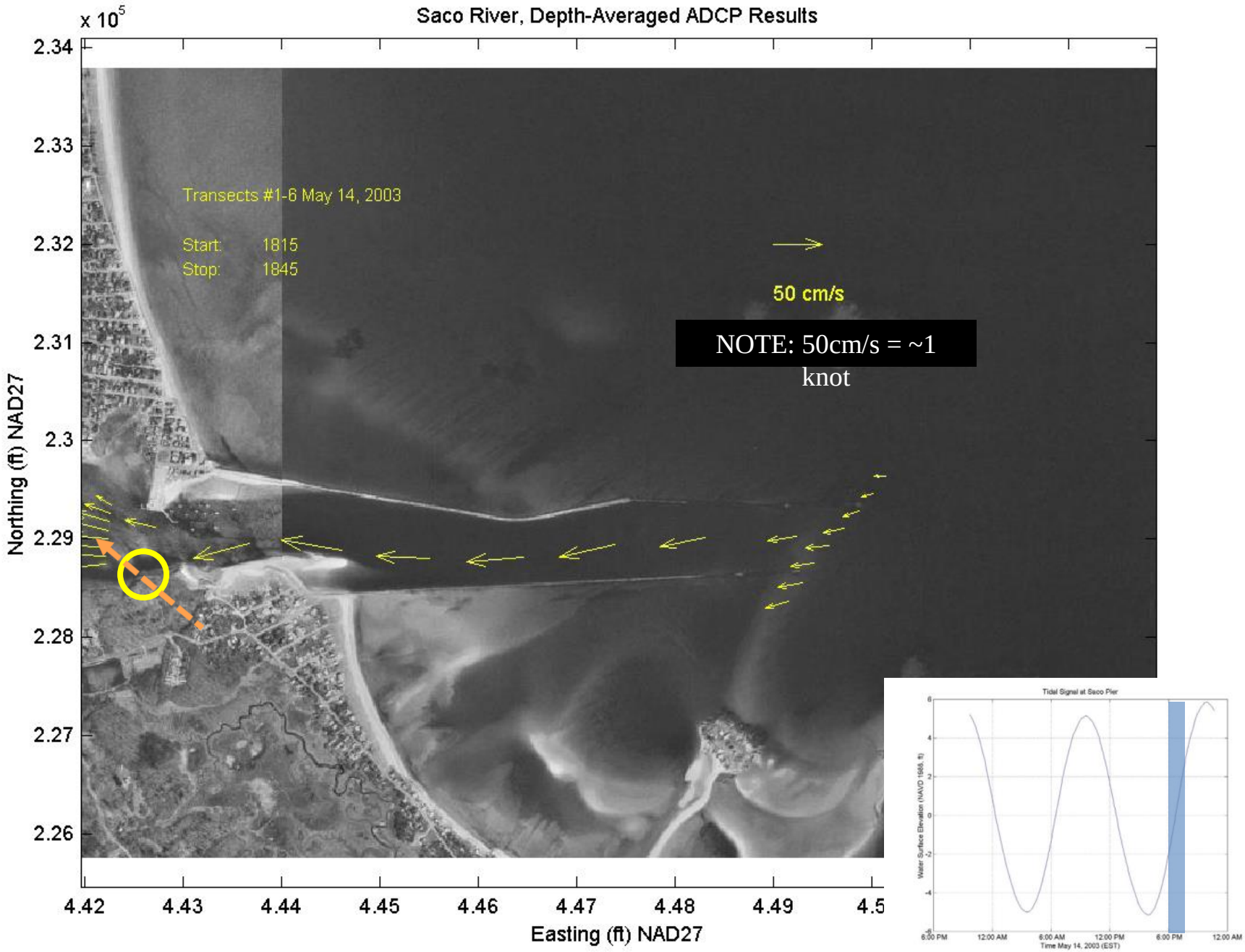
Saco River, Depth-Averaged ADCP Results
x 10^5
2.34
2.33
2.32
2.31
2.3
2.29
2.28
2.27
2.26
Northing (ft) NAD27
Transects #1-6 May 14, 2003
Start: 1815
Stop: 1845
50 cm/s
NOTE: 50cm/s = ~1 knot
4.42
4.43
4.44
4.45
4.46
4.47
4.48
4.49
4.5
Easting (ft) NAD27
Tidal Signal at Saco Pier
Water Surface Elevation (NAVD 1988, ft)
6:00 PM
12:00 AM
6:00 AM
12:00 PM
6:00 PM
12:00 AM
Time May 14, 2003 (EST)

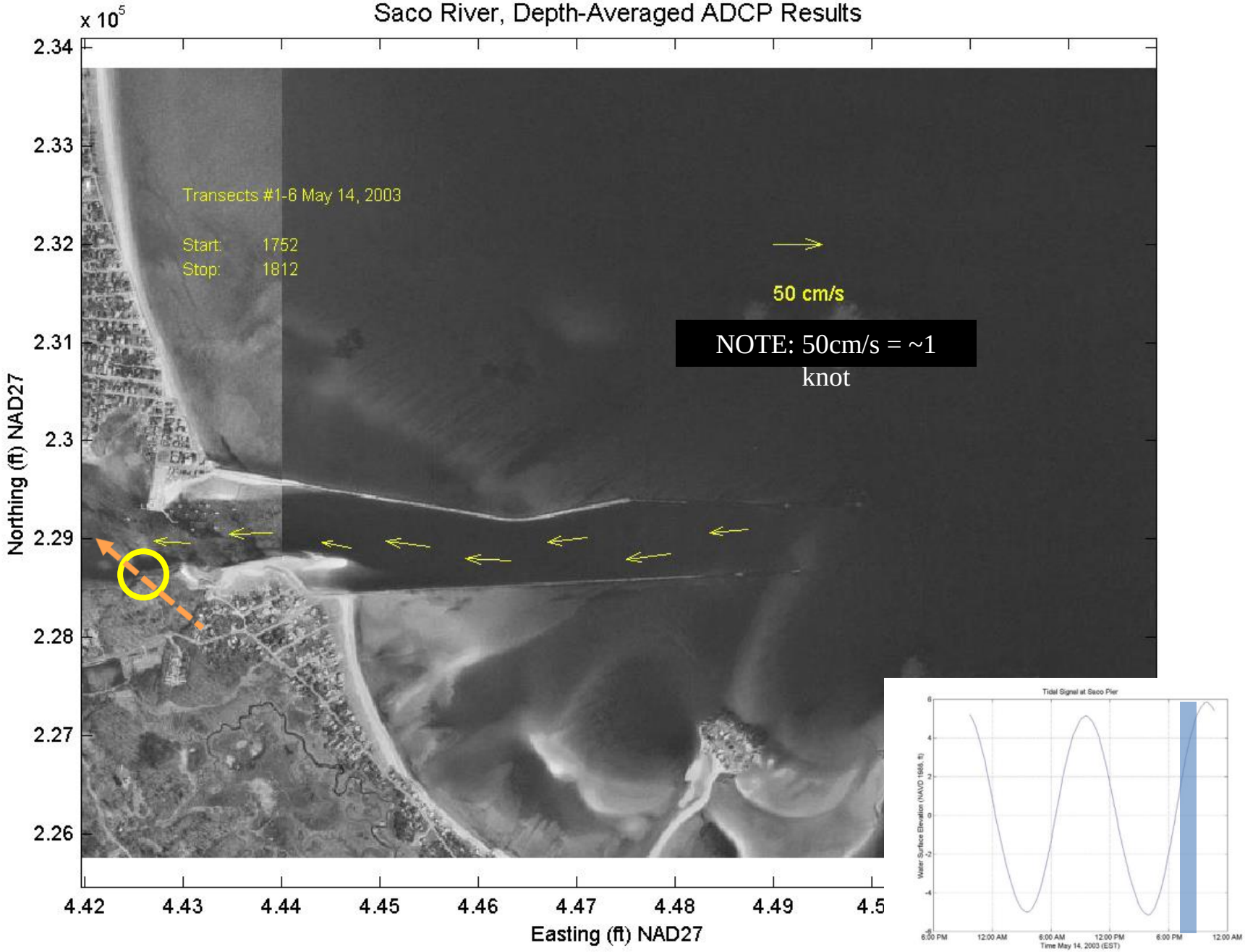
Saco River, Depth-Averaged ADCP Results
x 10^5
2.34
2.33
2.32
2.31
2.3
2.29
2.28
2.27
2.26
Northing (ft) NAD27
Transects #1-6 May 14, 2003
Start: 1752
Stop: 1812
50 cm/s
NOTE: 50cm/s = ~1 knot
4.42
4.43
4.44
4.45
4.46
4.47
4.48
4.49
4.5
Easting (ft) NAD27
Tidal Signal at Saco Pier
Water Surface Elevation (NAVD 1988, ft)
6:00 PM
12:00 AM
6:00 AM
12:00 PM
6:00 PM
12:00 AM
Time May 14, 2003 (EST)

- ***6.5.1 Transect 1***
- The channel geometry along Transect 1 consists of a single, relatively shallow channel. The transect is located just east of the Saco Pier, where a significant reduction in channel width occurs. Maximum depths in the channel at this location are approximately 5m (16.4 ft). The maximum recorded flood velocities were approximately 100-125 cm/s (3.3-4.1 ft/s). The maximum flood currents run in a west to west northwest direction throughout the entire water column. In addition to the westward flow, northward flow occurred on the northern portion of the channel indicating likely eddying around the point on the northern shore. The east/west flow also indicates some eastward flow in the northern extent of the transect, supporting the eddy structure. As the flood tide progressed, the stronger western currents were confined to the southern part of the channel. High tide occurred at 0905 hours and reversal of the flow direction was observed throughout the channel by 1019 hours. The maximum recorded ebb velocities were approximately 100-125 cm/s (3.3-4.1 ft/s) and occurred between 1100 and 1330 hours. These southeasterly ebb currents appear to favor the north side of the channel during the start of the ebb where the strongest currents are confined to the upper 2m of the water column. As the tide progresses, these currents spread to the entire channel area depth and breadth. During the majority of the ebb and flood phases of the tide, the color contour plots show increased turbulence and related eddy formation adjacent to the north shore (between 500 ft [152 m] and the end of transect). The increased turbulence is a result of the protrusion of the northern point (near Saco Harbor) into the channel. This narrowing prevents direct flow into or out of the river channel producing eddies as water tries to enter or exit the reduced-width channel.

Permit Requirements and Timing

- Maine DEP NRPA
- ACOE
- Saco River Corridor Commission
- City of Biddeford
- Harbor Commission
- February 2016 grant funding
- Construction spring 2017

Attachment 1
Formal Site Plan Review Application

City of Biddeford – Planning Department
Planning Board Application
P.O. Box 586, 205 Main Street Biddeford, Maine 04005
207-284-9115

Type of Application:

_x_ Shoreland Zoning Permit
_x_ Site Plan Review (Please include checklist)
__ Extraction
__ Conditional Use Permit
__ Subdivision (Please include Checklist)
__ Private Way
__ Other: _____

Applicant Information:

Name: University of New England
Mailing Address: 11 Hills Beach Road Biddeford, Maine
Telephone: 207-602-2365
Email: aphilippe@une.edu

What is your legal interest in the property?

_x_ Owner __ Potential Buyer with Contract __ Lease/Rental Agreement

Owner's Information:

Name: Applicant
Mailing Address: _____
Telephone: _____
Email: _____

Agent's Information:

Name: Tom Saucier, P.E. Site design Associates
Mailing Address: 23 Whitney Way Topsham, Maine 04086
Telephone: 207-449-4275
Email: tsaucier@sitedesignassociates.biz

Engineer/Surveyor's Information:

Name: Agent
Mailing Address: _____
Telephone: _____
Email: _____

Project Location and Lot Information:

Street Address: 11 Hills Beach Road Drainage Watershed: Tidal portion of Saco River
Tax Map: 52 Lot: 4
Current Zoning: IN Shoreland Zoning: Limited Residential
Size of Lot: 49.9 (x)acres ( )s.f. Lot Frontage: 1,489 ft +\-
Existing Use of Property: University use - Girard Marine Science Center

Property currently serviced by:

_x_ City Road __ Public Sewer _x_ Public Water __ Public Trash
__ Private Road __ Septic System __ Private Well _x_ Private Hauler

Slope Conditions in Area of Construction (if applicable):

__Flat (0-3% slope) __Rolling (3-8% slope) _x_ Hilly (8-15% slope) _x_ Steep (15%+ Slope)

Are there any wetlands or waterbodies on the site? _x_ (Yes)__(No) if yes attach information
Is the project within the 100-year floodplain? __ (Yes) _x_ (No) if yes attach information
Do you plan to bring fill onto the lot? _x_ (Yes) __(No) If yes attach information

Description of proposed use of property:

Project/Proposed Use:

University use - Research Pier

Property to be Serviced by:

x City Road __ Public Sewer x Public Water __ Public Trash

__ Private Road __ Septic System __ Private Well x Private Hauler

Limits of Disturbance: 0.5 (x)acres ( )s.f.

Net change in impervious cover: 0.249 (x)acres ( )s.f.

Is this project part of a larger project? __(Yes) x (No)

Is the project proposing a new Private or Public Road? __(Yes, Private) __(Yes, Public) x (No)

Is this project within the Urbanized Area/MS4 (*see City Drainage Map*) x (Yes) __(No)

Is the project proposing any Stormwater facilities/BMPs? x (Yes) __(No)

Will a Traffic Movement Permit (TMP) be required?: __(Yes) x (No)

x **If in a Shoreland Zone:**

Percent of residential lot coverage (Max 20%): N/A

Percent of structure expansion (Max 30%): N/A

__ **If Subdivision Review, number of lots proposed:** _____

__ **If a Private Way is proposed, number of lots served:** _____

If Site Plan Review, you must provide the following information:

Total new square feet footprint of structure: _____

Total new square feet paving/parking: 10,850 +/-

Waiver Requests (attach details):

1. See cover letter and June 9, 2025 responses to comments
2. _____
3. _____
4. _____
5. _____

Required Submittal Attachments:

A. Letters of Approval

x Fire Department – Contact Chief or Deputy Chief – 282-9986 (Request sent; previously revised plans

__ Ability to Serve for Water Service – Maine Water – 282-1543 in response to BFD comments.)

__ Ability to Serve for Sewer Service – Engineering Department – Tom Milligan 284-9118

__ Police Department – e-911 Road Name Designation – Contact Joanne Fisk 282-5127

__ Ability to Serve for Electrical Service-CMP-1-866-225-4200

x Letter to Planning Board describing project, Waiver requests, proposed improvements, addressing permit requirements, etc.

B. Photographs of Site.

C. Architectural renderings/drawings of proposed buildings, as required.

D. Engineering Plans, as required.

E. Stormwater Management Report, as required.

Fees (Due at time of Submission):

- $75 Nonrefundable Administration Fee is required for every application.
- Refer to "Attachment A Fees and Charges" of the Land Development Regulations for more information. Consult with Planning Staff if you have questions.

Required Signatures:

By signing this application, as the foresaid applicant or authorized agent:

- I certify that I have read and completely understand the application;
- I certify that the information contained in this application and its attachments are true and correct;
- I understand that all information provided on this form and all other documents submitted as part of my proposal is a matter of public record;
- I understand that copies of this information may be supplied upon request to an interested party.
- I understand that additional funds may be required through the course of the review for special studies, legal review costs, and/or engineering review.
- I understand that by submitting an application I am not guaranteed a place on any particular agenda. I further understand that the City Planner will place me on an agenda for review when the application is deemed substantially complete.

Will the proposed project cause 1 acre or more of site disturbance? __(Yes) _x_(No)

- **If Yes, applicant is responsible for any required Maine Construction General Permits and shall comply with the requirements of DEP Chapter 500 Stormwater Regulations, as they apply.**

Signature of Applicant: ___  **_____Date ___06/09/25_____**

Signature of Property Owner: ____ 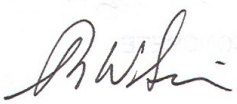 **_____Date ___06/09/25_____**

DIGITAL SUBMITTAL REQUIREMENTS FOR ALL SUBMITTALS:

A) PDF OF SIGNED APPLICATION

B) PDFs OF ALL DRAWING SETS AND OTHER REQUIRED SUBMITTAL ATTACHMENTS NOTED ABOVE

HARD-COPY SUBMITTAL REQUIREMENTS FOR PLANNING BOARD APPLICATIONS:

A) SEVEN (7) FULL-SIZE PAPER COPIES OF DRAWING SETS

DIGITAL SUBMITTAL REQUIREMENTS FOR FINAL APPROVAL:

A) INDIVIDUALLY NAMED PDFs OF EACH DRAWING (NOT A COMBINED PDF SET)

- Individual Drawing PDF Naming Format: 'PROJECT/SHEETSET NAME_INDIVDUAL DRAWING NAME.pdf'

B) PDF COPIES OF ALL PERMIT APPROVALS, APPLICATIONS, REPORTS, NARRATIVES, LETTERS, ETC.

C) FINAL CAD REFERENCE FILES IN DWG FORMAT (SURVEY & PROPOSED DESIGN LINEWORK)

- All drawings & CAD reference files must be to-scale and within the following coordinate systems:

- MAINE STATE PLANE WEST NAD83 (Horizontal Datum) & NAVD88 (Vertical Datum)

HARD-COPY SUBMITTAL REQUIREMENTS FOR FINAL APPROVAL:

A) THREE (3) FULL-SIZE PAPER COPIES OF INDIVIUDAL DRAWINGS REQUIRING BOARD SIGNATURE

B) ONE (1) FULL-SIZE PAPER COPY OF ENTIRE DRAWING SET FOR ENGINEERING RECORDS

PLEASE CONFIRM WITH PLANNING STAFF FOR CLARIFICATION

Attachment 2
Letter of Agent Authorization

UNIVERSITY OF NEW ENGLAND

Biddeford Campus
11 Hills Beach Road
Biddeford, ME 04005
(207) 283-0171 T

Portland Campus
716 Stevens Avenue
Portland, ME 04103
(207) 797-7261 T

May 29, 2023

Mr. Tom Saucier
Site Design Associates
23 Whitney Way
Topsham, Maine 04086

TO WHOM IT MAY CONCERN:

This letter authorizes Tom Saucier, Site Design Associates, to serve as an agent for University of New England for the purpose of permitting the proposed installation of a research pier and float on its Biddeford campus.

Sincerely,

Alan Thibeault
Vice president for University Operations

Attachment 3
Site Plan Checklist

CITY OF BIDDEFORD - SITE PLAN & SUBDIVISION APPLICATION DRAWING CHECKLIST *LAST REVISED: 11/26/2024*

CHECKLIST DIRECTIONS:

1. The following checklist must be completely filled out by the applicant and included on all preliminary and final Site Plan & Subdivision submittals. No checklist is required for sketch submitta
2. Applicant to confirm all of the items listed are included within the submittal Any missing items must have adequate reasoning to justify their absence
3. City to review applicant's submittal and checklist responses. Projects missing substantial submittal information with non-acceptable reasonir will be rejected and required to resubmit
4. Items in **BLACK** are required for 'Preliminary' approval & 'Final' approval
5. Items in **BLUE** are only required for 'Final' approval

SUBMITTAL INFORMATION - TO BE FILLED OUT BY APPLICANT	
Project Name:	University of New England (UNE) Marine Science Center Research Pie
Planning Board # (if available):	2024.34
Applicant Name/Info:	University of New England
Submittal #/Type (Prelim/Final):	Preliminary
Submittal Date:	6/10/2025

SUBMITTAL REQUIREMENT		APPLICANT RESPONSE			CITY REVIEW RESPONSE	
ITEM NUMBER	DESCRIPTION	INFORMATION PROVIDED (YES/NO)	LIST DRAWING SHEET NUMBER WHERE INFORMATION IS PROVIDED	REASON NOT PROVIDED/COMMENT	ACCEPTABLE (YES/NO-REVISE & RESUBMIT)	COMMENT
1	**GENERAL PLAN REQUIREMENTS**	YES				
A	Drawing specific legends (linetypes, hatches, etc.	YES	C-001, C-002			
B	Individual drawing layer control should be utilized: freeze/thawing, changing lineweights, and screening (i.e. screen existing layers on a proposed plan, freeze topography and underground utilities on a proposed site plan	YES	ALL			
C	North arrows, standard engineering scale viewports, scale bars, dated revision block	YES	ALL			
D	All drawings and surveys must be in the following coordinate systems: NAD83 Maine State Plane West (Horizontal) and NAVD88 (Vertical	YES	ALL			
E	Drawings need to be designed, signed & sealed by a Maine licensed professional engineer (PE); all boundary survey data needs to be performed by a licensed professional land surveyor (PLS)	YES	ALL			
2	**COVER SHEET**	YES				
A	Project Name & Property Address	YES	G-001			
B	Project Team Contact Information (Owner, Engineer, Contractor, etc.)	YES	G-001, G-002	Contractor contact info to be added at a later date		
C	Site Location Map	YES	G-001			
D	Sheet Set List of Drawings	YES	G-001			
E	Tax Map and Lot ID	YES	C-001			
F	Zoning & Shoreland Zone Information	YES	C-001			
G	Existing Use Description	YES	C-001			
H	Proposed Use Description	YES	C-003			
I	Required Waiver/Variances (Yes/No); if yes, plan must clearly list waivers/variances requesting	YES	G-001			
J	Name of Drainage Watershed	YES	C-001			
K	Within the MS4 Urbanized Area (Yes/No)	YES	C-001			
L	Natural resources (streams, wetlands, etc.) located on-site or adjacent to the property (Yes/No)	YES	C-001			
M	Within the 100-year Flood Zone (Yes/No)	YES	C-001			
N	Public Road Proposed (Yes/No)	NO	N/A	There are no public roads onsite		
O	Private Road Proposed (Yes/No)	YES	C-001			
P	Public Sewer Connection (Yes/No)	YES	C-001	There are no proposed improvements to the public sewer		
Q	Public Storm Drain Connection (Yes/No)	NO	N/A	There are no public storm drains onsite		
R	Limits of Disturbance in square feet and acres	YES	C-005			
S	Pervious Land Cover square footage, existing and propose	YES	C-003			
T	Impervious Land Cover square footage (Pavement/Gravel), existing and propose	YES	C-003			
U	Building Roof square footage, existing and propose	YES	C-001			
V	Assigned Planning Board Numbe	YES	G-001			
W	Estimated cut/fill earthwork volumes. If disturbing within the Flood Zone, a separate set of earthwork volumes required (overall site vs. within flood zone	YES	C-007, C-007			
3	**EXISTING CONDITIONS PLAN**					
A	Horizontal & Vertical Datums annotated (NAD83 & NAVD88)	YES	C-001			
B	Property & Right-of-Way Lines	YES	C-001			
C	Boundary line information (bearings, distances, etc.	YES	C-001			
D	Property pin and monumentation locations	YES	C-001			
E	Existing easements with proper ownership identifie	YES	C-001			
F	Road Names & Individual Lot Labels (Map, Lot, Owner, Acreage	YES	C-001			
G	Location of any Natural Resources and their respective buffers (wetlands, streams, etc	YES	C-001			
H	100-year Flood Zone Limits & Elevation	YES	C-001			
I	Existing contours with adequate contour labelling; minimum 1' contour interva	YES	C-001			
J	Existing building FFEs annotate	YES	C-001			
K	Spot elevations for all tie-in locations (curb cuts, property line	YES	C-001			
L	Existing buildings & structure	YES	C-001			
M	Existing pavement areas & number of parking space	YES	C-001			
N	Existing ADA ramp geometry, detectable warning plates, and ADA parking space	YES	C-001			
O	Existing site features (sidewalks, retaining walls, curbing, lightpoles, guide rails, dumpsters, fencing)	YES	C-001			
P	Existing signage and striping	YES	C-001			
Q	Existing underground utility locations (storm, sewer, force main, water, gas, elec, tel	YES	C-001			
R	Existing above-ground utility locations (manholes, catch basins, utility poles, hydrants, transformers, riprap)	YES	C-001			
S	Rim, invert in, invert out, pipe size, cardinal direction (N, E, S, W) information for any existing utility infrastructure being tied into (upstream/downstream/outfalls	YES	C-001			
T	Existing tree lines, street trees, free-standing trees (12" or larger diameter at breast height), and vegetation	YES	C-001			
U	Location of any borings, drinking wells, and monitoring well	YES	C-001			
4	**SITE DEMOLITION & EROSION CONTROL (E&SC) PLAN**					
A	Limits-of-disturbance outlined and acreage annotate	YES	C-005			
B	Location of any Natural Resources and their respective buffers (wetlands, streams, etc	YES	C-001			
C	100-year Flood Zone Limits	YES	C-001			
D	Callout existing site features to be demolished/removed/replace	YES	C-002			
E	Callout existing utilities to be demolished/removed/abandoned-in-plac	YES	C-002			
F	Hatch existing buildings and pavement to be remove	YES	C-002			
G	Construction Entrance location(s)	YES	C-005			
H	Perimeter E&SC control location(s) (i.e. silt fence, erosion berm mix	YES	C-005			
I	Stockpile and staging area(s) identified (with proper perimeter contro	YES	C-005			
J	Inlet protection location(s)	YES	C-005			
K	Note requiring contractor to implement dust control measures throughout construction	YES	C-012			
L	Note requiring contractor to pave utility trenches within right-of-way within 3 days of excavation or prior to any rain event	N/A	N/A	No utilties proposed within right-of-way		
M	If groundwater expected, show dewatering/silt bag location(s); show temporary pumping routing	YES	C-014			

	N	If large development is proposed with an extensive underground stormwater conveyance network, identify how SWM infrastructure and BMPs will be protected during construction and if sediment traps/basins are needed	N/A		No extensive underground SWM infrastructure is proposed.		
5		**SITE PLAN/SUBDIVISION PLAN**	YES				
	A	Partial Site Plans needed for any viewport scale greater than 1"=20	YES	C-003			
	B	Existing property and right-of-way lines	YES	C-003			
	C	Proposed subdivision lot lines and labels	YES	C-003			
	D	Required Zoning Setbacks shown with dimensions and annotation	YES	C-003			
	E	Bulk requirement summary table (zoning/parking calculations	YES	C-003			
	F	Location of any Natural Resources and their respective buffers (wetlands, streams, etc.	YES	C-003			
	G	100-year Flood Zone Limits	YES	C-003			
	H	Proposed building outlines, door entrances and loading docks	YES	C-003			
	I	Proposed building labels	YES	C-003			
	J	Proposed road & sidewalk extents; provide clear annotation if roads will be public or private	YES	C-003			
	K	Proposed parking and accessible parking locations; annotate parking space count	YES	C-003			
	L	Proposed signage, parking striping, and traffic striping	YES	C-003			
	M	Detailed ADA ramp geometry, detectable warning surfaces, and ADA parking striping/signage; existing & proposed	NO		No ADA ramps or parking are proposed		
	N	Proposed site features (i.e. curbing, walls, fencing, guiderail, fire hydrant, transformers, light pole locations)	YES	C-003, C-004, C-006, C-007			
	O	Proposed landscaping; detailed landscaping design should be shown on separate plan	YES	C-015, C-016			
	P	Designated snow storage areas	NO		No snow storage areas are proposed		
	Q	Proposed dumpster locations and trash removal access	NO		No dumpsters or trash removal are proposed.		
	R	Linear dimensions of all drive aisles, sidewalk widths, parking spaces, loading dock	YES	C-003, C-006, C-007			
	S	Radial dimensions for all curbs, landscaped islands, sidewalk	YES	C-003			
	T	Public/private road centerline stationing shown, labelled every 0+50' with curve dat	YES	C-003, C-006, C-007			
	U	If Private Road is proposed, final recorded plans must clearly note that proposed private roads will not be submitted in the future for public acceptanc	NO		Will be provided at a later date		
	V	If Private Road is proposed, final recorded plans must clearly note that the City is not responsible for any maintenance, repair, plowing, or trash removal of proposed private roads	NO		Will be provided at a later date		
	W	Planning Board signature block for final recording	YES	G-001			
6		**GRADING PLAN**	YES				
	A	Partial Grading Plans needed for any viewport greater than 1"=20	YES	C-004, C-006, C-007			
	B	Limits-of-disturbance outlined and acreage annotated	YES	C-004, C-006, C-007			
	C	Proposed Building Labels with Individual Finished Floor Elevations (FFEs	YES	C-004, C-006, C-007			
	D	Existing contours with adequate contour labelling, screened; minimum 1' contour interva	YES	C-004, C-006, C-007			
	E	Proposed contours with adequate contour labelling; minimum 1' contour interva	YES	C-004, C-006, C-007			
	F	Detailed grading for all ditches, swales, outfalls, and ripra	YES	C-004, C-006, C-007			
	G	All proposed contours tie-into existing contours at limits-of-disturbance outlin	YES	C-004, C-006, C-007			
	H	Existing spot elevations for all asphalt, curb, and SWM BMP tie-in location	YES	C-004, C-006, C-007			
	I	Location of any Natural Resources and their respective buffers (wetlands, streams, etc.	YES	C-004, C-006, C-007			
	J	100-year Flood Zone Limits	YES	C-004, C-006, C-007			
	K	Proposed spot elevations for all important roadway geometric points (including but not limited to: parking/drive aisles, building corners/entrances, retaining walls, loading docks, EOP/curblines)	YES	C-004, C-006, C-007			
	L	Proposed spot elevations for all ADA ramp/landing/parking stall geometry point	N/A	No new ADA proposed			
	M	Proposed % slope arrows for all ADA parking spaces and sidewalk	N/A	No new parking proposed			
	N	Proposed longitudinal % slope arrows for drainage ditch centerline	YES	C-004, C-006, C-007			
	O	Proposed % slope arrows for roads, parking areas, and landscape tie-in area	YES	C-004, C-006, C-007			
	P	Estimated cut/fill earthwork volumes. If disturbing within the Flood Zone, a separate set of earthwork volumes required (overall site vs. within flood zone	YES	C-004, C-006, C-007			
7		**ROAD PROFILES (if public/private road proposed)**	YES				
	A	Existing surface; dashed and screened	YES	C-006, C-007			
	B	Proposed surface; continuous and bold	YES	C-006, C-007			
	C	Road design speed must be clearly identified	YES	C-006, C-007			
	D	Corresponding centerline stationing and curve data annotation	YES	C-006, C-007			
	E	All vertical curves must identify the proposed 'K' values and confirm they meet the minimum design speed thresholds listed in AASHTO's Green Book Tables 3-35 & 3-3	YES	C-006, C-007			
	F	Clear annotation if proposed road will be public or private	YES	C-006, C-007			
	G	If Private Road is proposed, plans must clearly note that proposed private roads will not be submitted in the future for public acceptanc	YES	C-003			
	H	If Private Road is proposed, plans must clearly note that the City is not responsible for any maintenance, repair, plowing, or trash removal of proposed private road	YES	C-003			
8		**UTILITY PLAN**					
	A	Existing underground utility locations; screened (storm, sewer, force main, water, gas, electric, telecom)	YES	C-004			
	B	Existing above-ground utility locations; screened (manholes, catch basins, utility poles, hydrants, riprap)	YES	C-004			
	C	Rim, invert in, invert out, pipe size, cardinal direction (N, E, S, W) information for any existing utility infrastructure being tied into (upstream/downstream/outfalls	YES	C-004			
	D	Proposed underground utility locations; bold (storm, sewer, force main, watergas, electric, telecom, lighting)	YES	C-004, ES1.1			
	E	Proposed above-ground utility locations; bold (manholes, catch basins, utility poles, hydrants, transformers, riprap)	YES	C-004			
	F	Proposed storm culverts, outfalls, and riprap locations and size	YES	C-004 to C-007			
	G	Storm/sewer structure labels must include: rim, inverts in, inverts out, pipe sizes, cardinal directions (N, E, S, W)	YES	C-004 to C-007			
	H	Storm/sewer pipe labels must include: linear footage, pipe size, material, slop	YES	C-004 to C-007	Additional information can be found in the SWM Report		
	I	Flow directional arrows for storm & sewer pipes	YES	C-004 to C-007			
	J	Proposed & existing site features shown that could conflict with proposed utilities (trees, signs, lightpoles, bollards, foundations, guiderails	YES	C-004 to C-007			
	K	All storm drains must be sized to convey the 25-year storm	YES	C-004 to C-007	See SWM Report		
	L	Sewer force main sizes and invert elevations	NO	N/A	No force main proposed		
	M	Sewer pump station locations, model, rim, inverts, pipe sizes, cardinal directions (N,E,S,W); additional details and hydraulic calculations required for any Public pump station proposed.	NO	N/A	No pump stations proposed		
	N	Locations, sizes, and elevations of any: grease traps, oil-water separators, septic systems, drinking wells	NO	N/A	None proposed		
	O	Proposed water sizes labelled	NO	N/A	None Proposed		
9		**UTILITY PROFILES**					
	A	Utility profiles required for**all** gravity storm drain and sewer pipes proposed: within the right-of-way, within private or public roads, for non-driveway culverts, and for any public infrastructure tie-ins	NO	N/A	No utilties proposed in ROW		

B	Existing surface; dashed and screened	NO	N/A	No utilties proposed in ROW		
C	Proposed surface; continuous and bold	NO	N/A	No utilties proposed in ROW		
D	Storm/sewer structure labels must include: rim, inverts in, inverts out, pipe sizes, cardinal directions (N, E, S, W)	NO	N/A	No utilties proposed in ROW		
E	Storm/sewer pipe labels must include: linear footage, pipe size, material, slop	NO	N/A	No utilties proposed in ROW		
F	Existing and proposed gravity pipe crossings shown; sizes labelled and depths/clearance annotated	NO	N/A	No pipe crossing proposed		
G	Existing and proposed electric/water/telecom/gas crossings shown at approximate depths; sizes labelled and depths/clearance annotatec	YES	ES1.1			
10	**DETAILS**					
A	Road section detail, including pavement/gravel depths & cross slope	YES	C-008, C-009, C-010			
B	Sidewalk, paver, crosswalk, and any other pavement section detail:	N/A	None proposed			
C	Pavement sawcut & shiplap details	YES	C-003, C-006, C-007			
D	Utility trench/backfill detai	YES	C-011			
E	All site feature details; curbing, retaining walls, fencing, guiderails, dumpsters, et	YES	C-011, C-013, C-014			
F	Signage, striping, and ADA details	N/A	N/A	No signage or striping proposec		
G	E&S notes and details	YES	C-012, C-013, C-014			
H	Utility structure details (manholes, cleanouts, fittings, handholes, transformer pads, hydrants)	YES	C-013, C-014			
I	Storm outfall & riprap details	YES	C-011			
J	Drainage ditch cross section identifying minimum depth, minimum bed width, and maximum side slopes	NO	C-013, C-014			
K	Pump station, grease trap, oil-water separator, septic, drinking well detail	N/A	N/A	None Proposed		
L	Conduit section details	N/A	N/A	None Proposed		
11	**LANDSCAPING, LIGHTING & PHOTOMETRIC PLANS**					
A	As required by ordinance; at a minimum: locations, counts, lighting models, and landscaping species must be identifiec	YES	C-015, C-016, ES1.1			
B	Landscaping & lighting details	YES	C-015, C-016, ES1.1			
12	**DOCUMENTS/REPORTS/CALCULATIONS**					
A	On initial preliminary submittal applications, applicant must submit a development review and inspection fee. Applicant to coordinate fee amount with City Planner prior to submittal. This fee will be drawn against to cover the following type of services throughout the project life cycle (and may require replenishing): i. 3rd Party City Peer-Review ii. Site Inspections during the permitting process iii. Erosion & Sediment Control Inspections during construction iv. Right-of-Way Inspections during construction	Yes				
B	Stormwater Management Report, including: 1. Predevelopment & Post-development Drainage Area Maps, including: a. Subdrainage areas delineated and labeled b. Points of Interest/Analysis shown and labeled c. Hatching for different land cover areas (impervious, pervious, gravel) within each applicable USDA soil boundary d. Time of concentration (Tc) paths & durations e. Four City-standardized stormwater summary tables 2. If any SWM water quality BMP or detention facility is proposed, hydrologic model exports/hydrographs must be submitted for the for the 2, 10, 25, & 100-year storm frequencies 3. Sizing calculations for any SWM water quality BMP or detention facility 4. A stormwater maintenance manual for any proposed SWM water quality BMP or detention facility, including: a. Annual maintenance requirements b. Annual inspection requirements by a licensed PE; noting that all inspection reports/logs need to be submitted to the Engineering Department by March 1st each following year, identifying what on-going maintenance has occurred and what remedial repairs are needed c. Signed Property Owner Agreement: including the current property owner's contact information and signature; it must be noted that all stormwater BMP maintenance requirements are linked to the property for perpetuity and transfer to any new ownership	Yes				
C	An approved 'Sewer Ability-to-Serve Letter' from the Engineering Department: i. Applicant to submit proposed sewer flow calculations per Maine's Subsurface Wastewater Disposal Rules, Chapter 241, Section 4 (Tables 4A & 4C	N/A		No new buildings/sewer conveyance proposed		
D	A Performance Guarantee Cost Estimate utilizing Planning's templat	YES				
E	For any Site Location of Development (SLODA) project, the applicant's submittal must mimic a formal submittal to DEP. Submit must abide to DEP's SLODA application and include DEP's SLODA Submittal Checklist (Form D)	YES				
F	25-year hydraulic calculations for all storm conveyance infrastructure (pipes, culverts, drainage ditches); starting tailwater conditions/documentation must be clearly identifie	YES				
K	Public sewer pump station sizing calculations and maintenance plai	N/A	No pump stations proposed	No pump stations proposed		
M	Grease trap sizing calculations	N/A	No grease traps proposed	No grease traps proposed		
N	Homeowner Association (HOA) agreement for any private road serving two (2) lots or more	N/A	No HOA	No HOA		
O	Summary list & copy of any required DOT/DEP/USACE permits & approvals	YES				

Attachment 4
Location Map

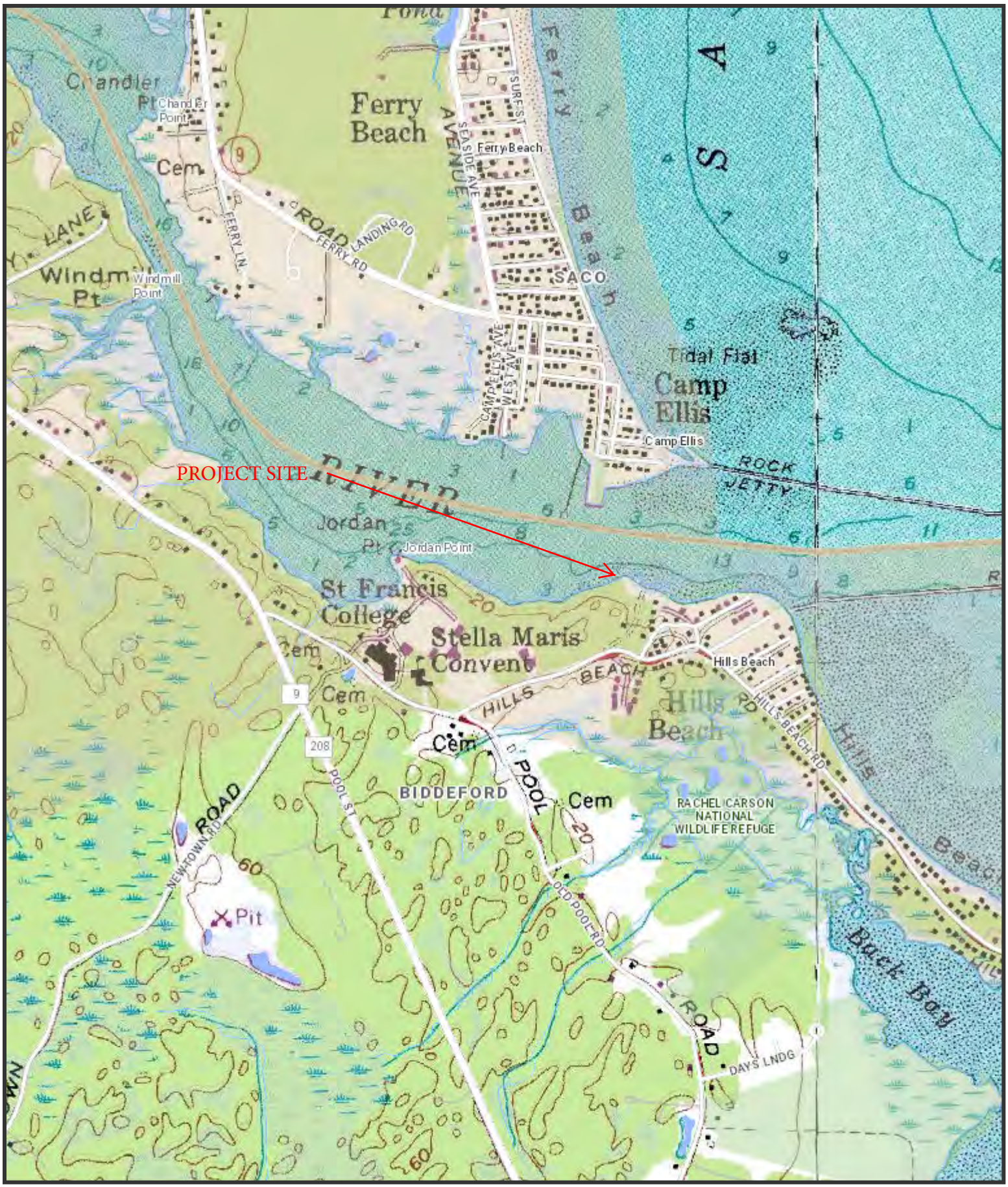

The Maine Department of Transportation provides this publication for information only. Reliance upon this information is at user risk. It is subject to revision and may be incomplete depending upon changing conditions. The Department assumes no liability if injuries or damages result from this information. This map is not intended to support emergency dispatch.

0.25 Miles

1 inch = 0.28 miles

Date: 6/8/2023
Time: 3:54:08 PM

Attachment 5
Deed

Excepting and reserving, however, from the last parcel described a small triangular parcel of land in the rear of the premises of Charles E. Roberts which triangular lot has a base of about 50 feet in length which is an extension of the northwesterly boundary of said Roberts lot; and has an altitude of about 100 feet in length which is the northeasterly side thereof and is located in the center of a ditch long supposed to be the rear line of the Roberts lot; and which has a hypotenuse which is coincident with the rear line of said Roberts lot and is the southerly side of said triangule, being the same premises conveyed by Blanche T. Beuscher and Olga M. DeHaven to the said Kenneth A. Littlefield and Barbara A. Littlefield, by their deed of mortgage dated on the twentieth (20) day of February 1958 and recorded in York Registry of Deeds, Book 1354, Page 447, but described under the aforementioned reference only as three certain lots or parcels of land, with buildings thereon, and mentioned as being the same premises conveyed on February 20th, 1958, by Kenneth A. and Barbara A. Littlefield to Blance T. Beuscher and Olga M. DeHaven, by Warranty Deed, Recorded Book 1362, Page 112; and that such entry was made and possession taken as aforesaid, for the avowed purpose of foreclosing said mortgage, because of a breach of the condition thereof.

Raymond E. Mealey

Madeline C. Mealey

STATE OF MAINE

COUNTY OF YORK, SS March 24, 1962 Signed and sworn to by the said Raymond E. Mealey and Madeline C. Mealey,

Before me. Maurice L. Shibles Notary Public (L.S.)
My Commission Expires Sept. 2, 1966

Recorded according to the original received April 6, 1962 at 11h. 58m. A. M. EL

KNOW ALL MEN BY THESE PRESENTS, THAT, COUVENT de la PRESENTATION de MARIE, a corporation organized and existing under the laws of the State of Maine and located at Biddeford, in the County of York and said State of Maine, in consideration of One Hundred Fifty Thousand Dollars ($150,000.00) paid by THE FRANCISCAN FATHERS OF MAINE, a corporation duly organized by law and having an established place of business at 605 Pool Road, in said Biddeford, the receipt whereof it does hereby acknowledge, does hereby give, grant, bargain, sell and convey, unto the said The Franciscan Fathers of Maine, its successors or assigns, forever, the following described property: I.R.S. One Hundred and Sixty Five Dollars

Parcel 1

A certain lot or parcel of land, with the buildings thereon, situated in

said Biddeford and bounded and described as follows:

BEGINNING at a point on the Northerly side of the Hill's Beach Road, so-called, in said Biddeford, said point being the Westerly corner of the land herein conveyed and being in the Southerly line of land formerly of one Finney and now of Couvent de la Presentation de Marie, and being marked by an iron stake driven into the ground; thence South eighty-two degrees eight minutes East (S 82° 08' E) two hundred fourteen and forty-six one-hundredths (214.46) feet by said Hill's Beach Road to an iron stake driven into the ground; thence North eighty-one degrees forty-two minutes East (N 81° 42' E) five hundred forty-five and five one-hundredths (545.05) feet by said Hill's Beach Road to an iron stake driven into the ground; thence South fifty degrees thirty-five minutes East (S 50° 35' E) two hundred thirty-eight and forty-seven one-hundredths (238.47) feet by said Hill's Beach Road to an iron stake driven into the ground and other land of this Grantor; thence North eighty-six degrees twenty-seven minutes East (N 86° 27' E) sixteen and ninety-one one-hundredths (16.91) feet by said other land of this Grantor to a drill hole into the ledge and land now or formerly of John J. Traynor; thence North three degrees thirty-three minutes West (N 3° 33' W) one hundred thirty-three and five tenths (133.5) feet by said land of John J. Traynor, land now or formerly of one Michael Reddy and a reserved street as shown on a plan of land of William A. Chadbourne, drawn by Z. G. Staples, July 14, 1874, and recorded in York County Registry of Deeds in Plan Book 2, Page 40, and by the stone wall to an iron stake driven into the ground at the Southwesterly corner of land now or formerly of William Libby; thence North twenty-two degrees forty-one minutes West (N 22° 41' W) one hundred twenty-eight and one-half (128½) feet by said land of William Libby, other land of this Grantor and by the stone wall to an angle in said stone wall; thence North fifty-five degrees fifty-seven minutes East (N 55° 57' E) three hundred ninety-three and nineteen one-hundredths (393.19) feet by said other land of this Grantor, by a reserved street as shown on said plan, and land now or formerly of Thomas Gallagher and by the fence and wall to an iron stake driven into the ground at the top of the bank; thence this same course to Saco River; thence Northerly, Northwesterly and Westerly by said River to an iron stake driven into the ground at a point of ledge and to said other land of this Grantor; thence South forty-one degrees East (S 41° E) three hundred thirty-nine and seven tenths (339.7) feet to an iron stake driven into the ground at the stone wall; thence South sixty-three degrees West (S 63° W) fifty-six and three tenths (56.3)feet by said stone wall to an iron stake driven into the ground; thence South sixty-nine degrees fifteen minutes West (S 69° 15' W) one hundred sixteen and one-half (116½) feet by said

wall to
forty mi
(128.5)
sixty-e
tenths
North e
nine te
thence
seventy
into th
19' W)
into th
one hun
into th
W) one
of begi
of this

of the
Road;
sixtee
cel to
thence
sevent
Beach
twenty
of beg

calle
bound

by Z.
of th
dred
(50)
by la
E) or

wall to an iron stake driven into the ground; thence South fifty-three degrees forty minutes West (S 53° 40' W) one hundred twenty-eight and five tenths (128.5) feet by said wall to an iron stake driven into the ground; thence South sixty-eight degrees nineteen minutes West (S 68° 19' W) one hundred and four tenths (100.4) feet by said wall to an iron stake driven into the ground; thence North eighty-eight degrees four minutes West (N 88° 04' W) seventy-seven and nine tenths (77.9) feet by said wall to an iron stake driven into the ground; thence South seventy-four degrees twenty-three minutes West (S 74° 23' W) seventy-nine and two tenths (79.2) feet by said wall to an iron stake driven into the ground; thence South fifty-seven degrees nineteen minutes West (S 57° 19' W) ninety-five and one tenth (95.1) feet by said wall to an iron stake driven into the ground; thence South sixty-four degrees ten minutes West (S 64° 10' W) one hundred six and nine tenths (106.9) feet by said wall to an iron stake driven into the ground; thence South sixty-five degrees thirty minutes West (S 65° 30' W) one hundred forty-four and eight tenths (144.8) feet by said wall to the point of beginning. The last ten courses described being bounded by said other land of this Grantor. The above courses refer to the 1931 magnetic meridian.

Parcel 2

Also another certain lot of land, bounded and described as follows:

BEGINNING at an iron stake driven into the ground at the Southerly corner of the above described parcel and on the Northerly side of said Hill's Beach Road; thence North eighty-six degrees twenty-seven minutes East (N 86° 27' E) sixteen and ninety-one one-hundredths (16.91) feet by said above described parcel to a drill hole in the ledge and land now or formerly of John J. Traynor; thence South three degrees thirty-three minutes East (S 3° 33' E) fifteen and seventy-five one-hundredths (15.75) feet by said land of Traynor to said Hill's Beach Road; thence North fifty degrees thirty-five minutes West (N 50° 35' W) twenty-three and eleven one-hundredths (23.11) feet by said road to the point of beginning.

Parcel 3

Also another certain lot or parcel of land, situated at Hill's Beach, so-called, in said Biddeford, and adjoining the first above described parcel, bounded and described as follows:

BEGINNING at the Northwest corner of Lot #18, on a plan of land made by Z. G. Staples for William A. Chadbourne, dated July 14, A. D. 1874, at land of the late Selucus Adams and S. S. Mitchell; thence running Southerly one hundred (100) feet to Lot #17 on said plan; thence Westerly by last named lot fifty (50) feet; thence North forty-eight degrees West (N 48° W) forty-eight (48) feet by land of said Adams; thence North fifty-one and one-half degrees East (N 51½° E) one hundred six (106) feet by land of said Adams and Mitchell to the place of

48
pg 146

Book 1484

beginning, and containing about five thousand four hundred and twenty-four (5,424) square feet, being the same parcel of land as described in deed of James B. Marr and others to Caroline P. Adams, dated April 1, 1891 and recorded in York County Registry of Deeds in Book 443, Page 88.

The above described premises were conveyed to the within Grantor by Les Soeurs de la Presentation de Marie by deed of Warranty, dated September 30, 1932 and recorded in York County Registry of Deeds in Book 834, Page 67.

Parcel 4

Also another certain lot or parcel of land, together with the buildings thereon, situated in said Biddeford and known as the old Ralph Tristram Jordan place situated on the northeasterly side of the Pool Road, so-called, bounded on the southwesterly side by said Pool Road; southeasterly by the road to the beach and land formerly of Mrs. Horace Woodman; on the northeasterly side by the Saco River; and on the northwesterly side by land, now or formerly of J. B. Coolbroth.

For more particular description of the premises hereinabove last described, reference is made to decree of Supreme Judicial Court of Maine in the matter of Hanford E. Finney against claiments known and unknown dated October 3, 1919, and recorded in said York County Registry of Deeds, Book 671, Page 374.

All fixtures and articles of whatever nature permanently attached to said buildings are included in this conveyance.

TO HAVE AND TO HOLD the aforegranted and bargained premises, with all privileges and appurtenances thereof to the said The Franciscan Fathers of Maine, its successors or assigns, to its and their use and behoof forever.

AND it does COVENANT with the said Grantee, its successors or assigns, that it is lawfully seized in fee of the premises; that they are free of all encumbrances; that it has good right to sell and convey the same to the said Grantee to hold as aforesaid; and that it shall and will Warrant and Defend the same to the said Grantee, its successors or assigns forever, against the lawful claims and demands of all persons.

IN WITNESS WHEREOF, the said Couvent de la Presentation de Marie has caused this instrument to be executed and its corporate seal affixed thereto by - - its Treasurer, thereunto duly authorized, this eighteenth day of April, in the year of our Lord one thousand nine hundred and sixty-two.

Signed, Sealed and Delivered
in Presence of

Harold D. Carroll

COUVENT de la PRESENTATION de MARIE
(Corporate Seal)
By Sister St. Leon of Rome
Leona Lafleur
Its Treasurer, thereunto duly authorized.

Attachment 6
Letter of Financial Capacity

UNIVERSITY OF NEW ENGLAND

Biddeford Campus
11 Hills Beach Road
Biddeford, ME 04005
(207) 283-0171 T

Portland Campus
716 Stevens Avenue
Portland, ME 04103
(207) 797-7261 T

April 14, 2025

To Whom It May Concern:

The University of New England plans to construct a research pier facility, along with an associated access road, on its Biddeford Campus. This new facility will have an estimated total project cost of $5,500,000. The University of New England has received a federal appropriation for $3,500,000 for this project, a and another $1,000,000 has already been received in private donations. The remainder of the project will be financed by the university.

Sincerely,

Alan Thibeault
Vice President for University Operations

Attachment 7
Stormwater Management Report



Stormwater Management Report

UNE Marine Science Center Pier

Submitted to:
University of New England
11 Hills Beach Road
Biddeford, ME 04005

Submitted by:
GEI Consultants, Inc.
5 Milk Street
Portland, ME 04101
207-797-8901

September 2023
Revision C. June 2025
Project 2203703

STATE OF MAINE
BRIAN M. MCDEVITT
PE18260
LICENSED PROFESSIONAL ENGINEER
6/9/2025



Brian McDevitt, P.E.
Senior Civil Engineer

Daniel J. Bannon, P.E. CFM
Project Manager / Sr. Waterfront Engineer

Table of Contents

1. Introduction **2**

2. Methodology **5**

3. Pre-Development Conditions **6**

4. Post-Development Conditions **8**

5. Stormwater Management **10**

6. Conclusions **14**

Appendices

A. USDA NRCS Soil Survey Report
B. Pre-Development HydroCAD Calculations
C. Post-Development HydroCAD Calculations
D. Inspection and Maintenance Plan

Drawings

SW-01 PRE-DEVELOPMENT DRAINAGE PLAN
SW-02 POST-DEVELOPMENT DRAINAGE PLAN
SW-03 TREATMENT AREA PLAN

C-001 EXISTING CONDITIONS PLAN
C-002 DEMOLITION AND CONSTRUCTION STAGING
C-003 SITE PLAN
C-004 GRADING AND DRAINAGE PLAN
C-005 EROSION CONTROL PLAN
C-006 ACCESS ROAD PLAN AND PROFILE STA 1+00 TO MATCHLINE STA 4+00
C-007 ACCESS ROAD PLAN AND PROFILE MATCHLINE STA 4+00 TO STA 6+60
C-008 ACCESS ROAD TYPICAL SECTION
C-009 ACCESS ROAD SECTIONS 2+00 TO 3+75
C-010 ACCESS ROAD SECTIONS 4+00 TO 5+75
C-011 SITE DETAILS I
C-012 EROSION CONTROL NOTES
C-013 EROSION CONTROL DETAILS I
C-014 EROSION CONTROL DETAILS II
C-015 REVEGETATION PLAN
C-016 REVEGETATION NOTES, DETAILS, AND SCHEDULES

DJB:BM:bdp

B:\Working\UNIVERSITY OF NEW ENGLAND\2203703 UNE Marine Science Center Pier\06_REGULATORY\Stormwater\UNE MSC Stormwater Report Rev. 06-05-2025.docx

1. Introduction

The University of New England (UNE) campus is located along the Saco River in Biddeford, ME. The Marine Science Center is located on the waterfront at the easterly end of campus (Fig. 1) approximately opposite Camp Ellis in Saco. To support MSC research activities, UNE proposes to construct a pier from the shore adjacent to the MSC into the Saco River to provide an all-tide access facility for small and shallow draft vessels (skiffs, landing craft, up to approximately 3-foot draft), with tidally-restricted access for larger vessels.



Fig. 1. Aerial Photo of University of New England Marine Science Center Waterfront

In 2008-2010, UNE worked with Baker Design Consultants (BDC) to undertake a concept planning study for the proposed pier. In this study, nine alternative designs were developed for water access facilities along the UNE waterfront consisting of various configurations of piers, boat ramps, and upland access and support facilities. The alternatives were evaluated on a range of criteria including technical criteria, functionality, constructability, cost and others to identify a preferred facility location. The nine alternatives evaluated through this study are shown in Fig. 2. At the conclusion of this study, Site 7 (directly in front of the Marine Science Center building) was identified as the preferred facility location (Site) to develop a new pier facility that would consist of a pile-supported pier extending from shore out into the Saco River.

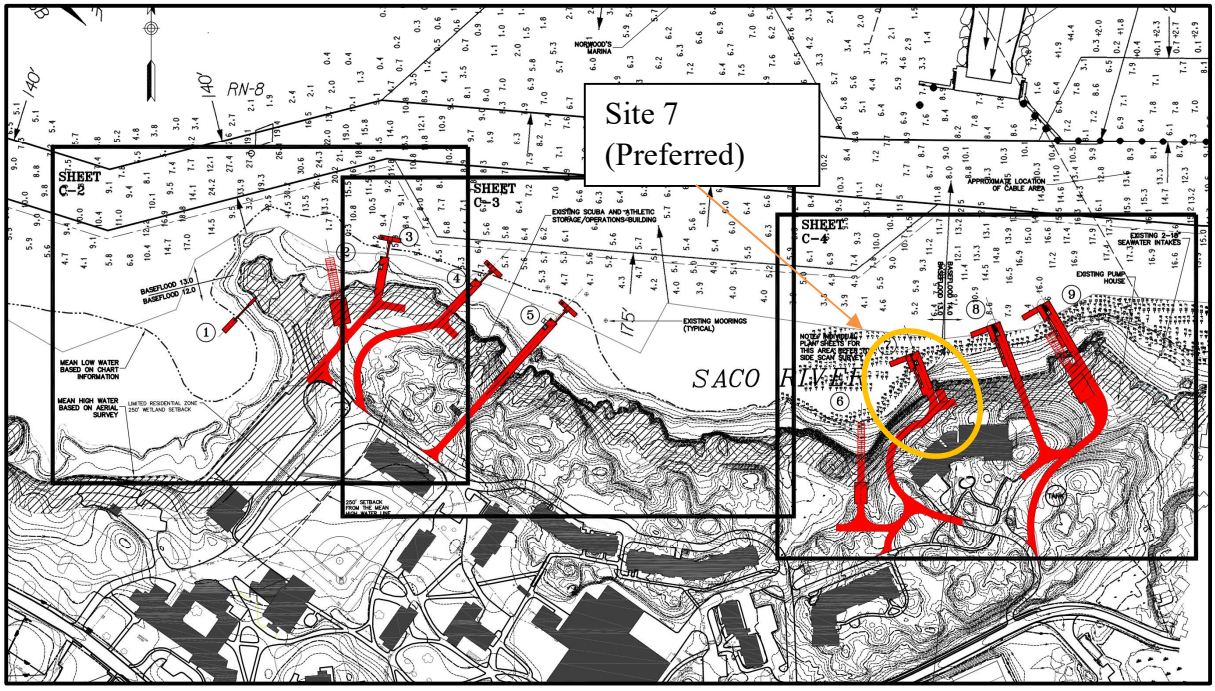

Fig. 2. Pier Location Alternatives from BDC Feasibility Study

In 2015-2016, UNE worked with BDC to undertake further design studies for a pier at the preferred location to investigate structure dimensions, orientation, rough order of magnitude costs, and impacts to coastal resources and features. As part of this evaluation, a preliminary geotechnical investigation was undertaken by GZA Geoenvironmental that included one water boring, two probes, and four test pits. At the conclusion of this phase of work, three alternative layouts were developed and reviewed with staff from UNE, the City of Biddeford, and the Saco River Corridor Commission and memorialized in a memo from BDC dated March 22, 2016.

In February 2022, UNE resumed design of the new proposed pier working with GEI Consultants to confirm conceptual layout for the pier and access road, and undertake design through 100% design and bid documents, as well as coordinate with UNE's consultant Site Design Associates for permitting of the proposed facility.

The proposed facility includes the following:

1. A pile supported pier structure extending from shore into the Saco River. The proposed pier includes an approximately 130-foot-long approach section extending from shore and an 80-foot long pier head section oriented roughly parallel to the direction of flow in the river. The pier consists of a concrete superstructure on steel pipe piles, with timber fender piles for vessel berthing and floating docks, and a pile supported gangway lifting beam to allow the gangway ramp to be temporarily removed from the water.

2. A floating dock system consisting of one 8-foot by 24-foot float, one 8-foot by 26-foot 10-inch float, and one 12-foot by 30-foot gangway landing float to provide all-tide vessel access for UNE's vessels on the west side of the pier, and a single 6-foot by 20-foot floating dock to provide a tie-up location for the City of Biddeford Fire Boat on the east side of the pier.
3. An 80-foot by 5-foot gangway to provide ADA compliant access to the float system.
4. An upland access road connecting the existing road at the MSC to the proposed pier, including associated site grading, drainage, and stormwater management features.

2. Methodology

Technical Release No. 22 (TR20) was used to calculate the existing and developed runoff from the project area. Hydrographs have been generated for the 2, 10, and 25-year frequency design storm events utilizing the NRCS Type III storm distribution and the 24-hour regional data from York County's rainfall data as required by MaineDEP. The rainfall amounts for York County are listed below:

Table 1-Existing 24 Hour Rainfall Frequency			
Rainfall amounts in Inches			
Design Storm	***2-Year***	***10-Year***	***25-Year***
	3.21	4.83	6.11

The following guidelines were utilized in the design of the Site's stormwater measures and BMPs (MaineDEP Stormwater Guidelines, Chapter 500):

1. Waiver of the flooding standard. A project is eligible for a waiver from the flooding standard if it discharges to a coastal wetland, a great pond, or a major river segment. A waiver is available for a project in the watershed of a coastal wetland, a great pond, or a major river segment provide the applicant demonstrates that the project convey stormwater exclusively in sheet flow, in a manmade open channel or in a piped system directly into one of these resources.
2. The redistribution of stormwater discharges standard will be met by discharging to a level spreader. The peak stormwater flow rate to a level spreader due to runoff from a 10-year, 24-hours storm must be less that 0.25 cubic feet per second (0.25 cfs) per foot length of level spreader.
3. Project will meet the erosion and sedimentation control standards found in Maine Department of Environmental Protection Guidelines, Chapter 500, Appendix A.

3. Pre-Development Conditions

1. Land Use

   Presently, the Site is the location of the University of New England Girard Marine Science Center. However, the existing buildings and parking lots exist outside of the limits of this project. Runoff generated from the buildings and parking lots in conveyed via underground pipes to the south, away from the Saco River.

   The proposed project limits currently consists of predominantly wooded areas. The southeast corner of the Site contains gravel path.

2. Topography

   The Site is mainly comprised of steeply sloped wooded areas with slopes near 20% for most of the Site. The Site mostly slopes to the north towards the Saco River/Atlantic Ocean. Per the NRCS WebSoil Survey, the Site is comprised almost completely of sandy, stony soil. These sandy soils are rated as Hydrologic Group D. A copy of the Web Soil Survey can be found in the Appendices.

3. Existing Drainage Area

   Presently, the runoff from the Site flows via overland flow to three different points of analysis, hereafter known as DP1, DP2 and DP3, with associated drainage areas 1S, 2S and 3S, respectively. The predevelopment drainage areas are described below:

   A map entitled Pre-Development Drainage Plan is included in the Drawings section of this report. Additionally, the HydroCAD model and calculations can also be found in the Appendix.

   Predevelopment Area 1S is the smallest of the existing drainage areas and is ±0.460 acres which consists of wooded areas. Runoff from Predevelopment Area 1S flows overland from the rear of the Girard Marine Science Center to the northeast and directly into the Saco River/Atlantic Ocean at DP1.

   Predevelopment Area 2S is ±0.637 acres and can be found in the middle of the Site. Predevelopment Area 2S consists of all wooded areas. Runoff from Predevelopment Area 2S flows via overland flow from a ledge in the middle of the Site to the north to the Saco River/Atlantic Ocean at DP2.

Predevelopment Area 3S is ±1.461 acres and comprises the eastern most portion of the Site. Predevelopment Areas 3S consists mostly of wooded areas and contains a gravel path leading to the lower lying wetlands and sand beaches along the Saco River/Atlantic Ocean. Runoff from Predevelopment Area 3S from the paved walkway at the Girard Marine Science Center to the northeast to the Saco River/Atlantic Ocean at DP3.

Tables 2A, 2B and 2C below list the total runoff for each Predevelopment Area:

Table 2A-Predevelopment Area 1S Runoff
Rainfall amounts in cubic feet per second

Pre-Development Total	***2-Year***	***10-Year***	***25-Year***	***100-Year***
Peak Runoff Rate (cfs)	0.71	1.44	2.07	3.31

Table 2B-Predevelopment Area 2S Runoff
Rainfall amounts in cubic feet per second

Pre-Development Total	***2-Year***	***10-Year***	***25-Year***	***100-Year***
Peak Runoff Rate (cfs)	0.74	1.51	2.17	3.50

Table 2C-Predevelopment Area 3S Runoff
Rainfall amounts in cubic feet per second

Pre-Development Total	***2-Year***	***10-Year***	***25-Year***	***100-Year***
Peak Runoff Rate (cfs)	2.39	4.58	6.44	10.05

4. Post Development Conditions

1. Land Use

When fully developed, the Site will contain the following improvements:

a. A pile supported pier structure extending from shore into the Saco River. The proposed pier includes an approximately 130-foot-long approach section extending from shore and an 80-foot long pier head section oriented roughly parallel to the direction of flow in the river. The pier consists of a concrete superstructure on steel pipe piles, with timber fender piles for vessel berthing and floating docks, and a pile supported gangway lifting beam to allow the gangway ramp to be temporarily removed from the water.
b. A floating dock system consisting of one 8-foot by 24-foot float, one 8-foot by 26-foot 10-inch float, and one 12-foot by 30-foot gangway landing float to provide all-tide vessel access for UNE's vessels on the west side of the pier, and a single 6-foot by 20-foot floating dock to provide a tie-up location for the City of Biddeford Fire Boat on the east side of the pier.
c. An 80-foot by 5-foot gangway to provide ADA compliant access to the float system.
d. An upland superelevated access road connecting the existing road at the MSC to the proposed pier, including associated site grading, drainage, and stormwater management features.

These improvements will result in a total increase in impervious area of 0.249 acres. The increase in impervious area will be managed by the two bioretention filter cells to the north of the Girard Marine Science Center. Runoff will be conveyed to the bioretention filter cells via proposed vegetated swales along the low side of the superelevated access road.

The bioretention filter cells will slowly release captured stormwater via underground pipe into the Saco River/Atlantic Ocean.

2. Drainage Areas

The map entitled Post-Development Drainage Plan delineating all developed drainage areas can be found in the Drawings section of this report. For analysis, the Site was broken up into 5 different drainage areas hereafter known as 1S, 2S, 3S, 4S, and 5S.

Post Development Area 1S contains the area that conveys runoff to the western Bioretention Filter Cell B. This area contains impervious areas from the access road and the proposed vegetated areas behind the Girard Marine Science Center. Runoff is conveyed to the Bioretention Filter Cell B via vegetated swale. Runoff captured by the bioretention filter cell will be treated and slowly released via underground pipe to the outfall under the proposed pier and into the Saco River/Atlantic Ocean near DP1.

Post Development Area 2S contains the areas to the northwest of the Site that conveys runoff via over land flow from the Girard Marine Science Center to DP1. This area contains small impervious areas as it contains the northern shoulder of the access road and the transition from access road to pier. Runoff from this area will not be managed for water quality or peak rate reduction.

Post Development Area 3S contains the area that conveys runoff to the eastern Bioretention Filter Cell A. This area contains impervious area from the access road and the proposed vegetated areas behind and to the east of the Girard Marine Science Center. Runoff is conveyed to the Bioretention Filter Cell A via vegetated swale. Runoff captured by the bioretention filter cell will be treated and slowly released via underground pipe to the outfall to the north where it will run through a level spreader to further reduce peak flow rate. Runoff will leave the level spreader and reach the Saco River/Atlantic Ocean via overland flow near DP2.

Post Development Area 4S contains the area to the northeast of the Site that conveys runoff via over land flow from the Girard Marine Science Center to DP2. This area contains small impervious areas as it contains the northern shoulder of the access road and the level spreader. Runoff from this area will not be managed for water quality or peak rate reduction.

Post Development Drainage Area 5S contains the area to the eastern portion of the Site. This this area contains the southernmost portion of the proposed access road and the existing gravel path. Runoff from this area will be conveyed via overland flow to the Saco River/Atlantic Ocean at DP3.

5. Stormwater Management

1. Stormwater Quantity

The bioretention filter cells are proposed to reduce the peak runoff rate of the 2, 10, and 25-year storms to treat stormwater runoff from the Site in accordance with DEP standards. Despite this, efforts were made to minimize the peak runoff rate from the Site. The tables below summarize the peak rate of runoff for the Site:

TABLE No. 3A
Managed Total Peak Discharge Summary of the Proposed Conditions to Discharge Point DP1

Storm Event	2-Year		10-Year		25-Year		100-Year	
	Existing	**Proposed**	**Existing**	**Proposed**	**Existing**	**Proposed**	**Existing**	**Proposed**
Peak Runoff Rate (cfs)	0.71	1.02	1.44	1.85	2.07	2.54	3.31	3.88

TABLE No. 3B
Managed Total Peak Discharge Summary of the Proposed Conditions to Discharge Point DP2

Storm Event	2-Year		10-Year		25-Year		100-Year	
	Existing	**Proposed**	**Existing**	**Proposed**	**Existing**	**Proposed**	**Existing**	**Proposed**
Peak Runoff Rate (cfs)	0.74	1.24	1.51	2.31	2.17	3.22	3.50	4.98

TABLE No. 3C
Managed Total Peak Discharge Summary of the Proposed Conditions to Discharge Point DP3

Storm Event	2-Year		10-Year		25-Year		100-Year	
	Existing	**Proposed**	**Existing**	**Proposed**	**Existing**	**Proposed**	**Existing**	**Proposed**
Peak Runoff Rate (cfs)	2.39	2.23	4.58	4.26	6.44	5.99	10.05	9.35

The tables above show a relatively minor increase in the peak rate of stormwater runoff subsequent to development. The northern most outfall will discharge to a level spreader which will create sheet flow into the Saco River/Atlantic Ocean. The western most outfall will outlet through the pier concrete abutment. Because the area downgradient of the outlets is stable rock, there will be no impacts due to the minor

increase in runoff. Stormwater runoff from each of the subcatchments adjacent to the river is not considered a point discharge in either the existing or proposed conditions, and is dispersed over the entire frontage along the river.

Since this development outlets directly to a major river segment/ocean, the flooding standard is typically waived by DEP (Chapter 500-Section F.3.a). The City also typically waives the need to provide detention of stormwater runoff from this parcel of UNE's property due to the tidal nature of the receiving waters. A waiver has been requested.

2. Stormwater Quality

The project proposes to treat 76% of impervious development and 72% of all new development. As discussed in the preapplication meeting, the proposed development will be treated as a linear portion of the project. For a linear project, the minimum treatment level required is 70% for impervious development and 50% of all new development. Water Quality treatment level are found in the tables below.

TABLE No. 4

Water Quality Treatment Level

Subcatchment Area	Impervious Area (SF)	Landscaped Area (SF)	Developed Area (SF)	Filter Area Required (SF)	Filter Area Provided (SF)	Water Quality Volume Required (CF)	Water Quality Volume Provided (CF)	Sediment Forebay Volume Required (CF)	Sediment Forebay Volume Provided (CF)	BMP
1S	4,917	4,915	9,832	344	854	574	200			Bioretention Filter
2S	1,238	10,250	11,488	267	-	445	-			-
3S	4,476	8,889	13,365	402	565	669	380	144	115	Bioretention Filter
4S	295	17,234	17,529	359	-	599	-			-
5S	6,273	52,906	59,179	1,372	-	2,286	-			-
Total Treated	**13,071**	**13,804**	**80,203**	930	-	1,549				
Total Developed Impervious Area	**17,199**									
Total Developed Area	**111,393**									
Percent Developed Area Treated	**72%**									
Percent Developed Impervious Area Treated	**76%**									

3. Erosion and Sedimentation Control

BMP's such as stabilized construction entrance, silt fence and/or filter berms of erosion control mix, riprap pipe inlet and outlet protection, turf reinforcement matting, mulch and permanent seeding will be used to prevent erosion and downstream migration of sediment during construction. The locations of temporary and permanent erosion control measures are erosion and sedimentation control notes

and details are shown on the design drawing set.

4. Inspection and Maintenance

   The University of New England will be responsible for maintaining the stormwater facilities for the project. An Inspection and Maintenance Plan is included in the Appendix. The plan includes a draft of the Stormwater Drainage System Maintenance Agreement, to be finalized and recorded as a condition of approval.

6. Conclusions

The stormwater management for this project included a variety of BMPs to control both the quantity and quality of stormwater runoff. The HydroCAD calculations show a minimal increase in the stormwater runoff from the proposed Site however the Stormwater Quantity requirement can be waved since this development discharges directly to a major river segment/ocean, the flooding standards can be waived (Chapter 500-Section F.3.a).

Stormwater treatment BMPs have been designed to treat stormwater runoff from more than 70% of the developed impervious area with additional treatment credit from the implementation of Low Impact Development Measures. Based on the information provided, no adverse impacts to downstream receiving bodies are anticipated.

Appendix A

NRCS Web Soil Survey Report

United States Department of Agriculture

NRCS

Natural Resources Conservation Service

A product of the National Cooperative Soil Survey, a joint effort of the United States Department of Agriculture and other Federal agencies, State agencies including the Agricultural Experiment Stations, and local participants

Custom Soil Resource Report for York County, Maine



Preface

Soil surveys contain information that affects land use planning in survey areas. They highlight soil limitations that affect various land uses and provide information about the properties of the soils in the survey areas. Soil surveys are designed for many different users, including farmers, ranchers, foresters, agronomists, urban planners, community officials, engineers, developers, builders, and home buyers. Also, conservationists, teachers, students, and specialists in recreation, waste disposal, and pollution control can use the surveys to help them understand, protect, or enhance the environment.

Various land use regulations of Federal, State, and local governments may impose special restrictions on land use or land treatment. Soil surveys identify soil properties that are used in making various land use or land treatment decisions. The information is intended to help the land users identify and reduce the effects of soil limitations on various land uses. The landowner or user is responsible for identifying and complying with existing laws and regulations.

Although soil survey information can be used for general farm, local, and wider area planning, onsite investigation is needed to supplement this information in some cases. Examples include soil quality assessments (http://www.nrcs.usda.gov/wps/portal/nrcs/main/soils/health/) and certain conservation and engineering applications. For more detailed information, contact your local USDA Service Center (https://offices.sc.egov.usda.gov/locator/app?agency=nrcs) or your NRCS State Soil Scientist (http://www.nrcs.usda.gov/wps/portal/nrcs/detail/soils/contactus/?cid=nrcs142p2_053951).

Great differences in soil properties can occur within short distances. Some soils are seasonally wet or subject to flooding. Some are too unstable to be used as a foundation for buildings or roads. Clayey or wet soils are poorly suited to use as septic tank absorption fields. A high water table makes a soil poorly suited to basements or underground installations.

The National Cooperative Soil Survey is a joint effort of the United States Department of Agriculture and other Federal agencies, State agencies including the Agricultural Experiment Stations, and local agencies. The Natural Resources Conservation Service (NRCS) has leadership for the Federal part of the National Cooperative Soil Survey.

Information about soils is updated periodically. Updated information is available through the NRCS Web Soil Survey, the site for official soil survey information.

The U.S. Department of Agriculture (USDA) prohibits discrimination in all its programs and activities on the basis of race, color, national origin, age, disability, and where applicable, sex, marital status, familial status, parental status, religion, sexual orientation, genetic information, political beliefs, reprisal, or because all or a part of an individual's income is derived from any public assistance program. (Not all prohibited bases apply to all programs.) Persons with disabilities who require

alternative means for communication of program information (Braille, large print, audiotape, etc.) should contact USDA's TARGET Center at (202) 720-2600 (voice and TDD). To file a complaint of discrimination, write to USDA, Director, Office of Civil Rights, 1400 Independence Avenue, S.W., Washington, D.C. 20250-9410 or call (800) 795-3272 (voice) or (202) 720-6382 (TDD). USDA is an equal opportunity provider and employer.

Contents

Preface.....2
How Soil Surveys Are Made.....5
Soil Map.....8
Soil Map.....9
Legend.....10
Map Unit Legend.....11
Map Unit Descriptions.....11
York County, Maine.....13
Ba—Beaches, sand.....13
LyC—Lyman-Rock outcrop complex, 8 to 15 percent slopes.....13
LyE—Lyman-Rock outcrop complex, 15 to 80 percent slopes.....15
UH—Urban land-Hooksan complex, 0 to 8 percent slopes.....17
W—Water bodies.....18

How Soil Surveys Are Made

Soil surveys are made to provide information about the soils and miscellaneous areas in a specific area. They include a description of the soils and miscellaneous areas and their location on the landscape and tables that show soil properties and limitations affecting various uses. Soil scientists observed the steepness, length, and shape of the slopes; the general pattern of drainage; the kinds of crops and native plants; and the kinds of bedrock. They observed and described many soil profiles. A soil profile is the sequence of natural layers, or horizons, in a soil. The profile extends from the surface down into the unconsolidated material in which the soil formed or from the surface down to bedrock. The unconsolidated material is devoid of roots and other living organisms and has not been changed by other biological activity.

Currently, soils are mapped according to the boundaries of major land resource areas (MLRAs). MLRAs are geographically associated land resource units that share common characteristics related to physiography, geology, climate, water resources, soils, biological resources, and land uses (USDA, 2006). Soil survey areas typically consist of parts of one or more MLRA.

The soils and miscellaneous areas in a survey area occur in an orderly pattern that is related to the geology, landforms, relief, climate, and natural vegetation of the area. Each kind of soil and miscellaneous area is associated with a particular kind of landform or with a segment of the landform. By observing the soils and miscellaneous areas in the survey area and relating their position to specific segments of the landform, a soil scientist develops a concept, or model, of how they were formed. Thus, during mapping, this model enables the soil scientist to predict with a considerable degree of accuracy the kind of soil or miscellaneous area at a specific location on the landscape.

Commonly, individual soils on the landscape merge into one another as their characteristics gradually change. To construct an accurate soil map, however, soil scientists must determine the boundaries between the soils. They can observe only a limited number of soil profiles. Nevertheless, these observations, supplemented by an understanding of the soil-vegetation-landscape relationship, are sufficient to verify predictions of the kinds of soil in an area and to determine the boundaries.

Soil scientists recorded the characteristics of the soil profiles that they studied. They noted soil color, texture, size and shape of soil aggregates, kind and amount of rock fragments, distribution of plant roots, reaction, and other features that enable them to identify soils. After describing the soils in the survey area and determining their properties, the soil scientists assigned the soils to taxonomic classes (units). Taxonomic classes are concepts. Each taxonomic class has a set of soil characteristics with precisely defined limits. The classes are used as a basis for comparison to classify soils systematically. Soil taxonomy, the system of taxonomic classification used in the United States, is based mainly on the kind and character of soil properties and the arrangement of horizons within the profile. After the soil

scientists classified and named the soils in the survey area, they compared the individual soils with similar soils in the same taxonomic class in other areas so that they could confirm data and assemble additional data based on experience and research.

The objective of soil mapping is not to delineate pure map unit components; the objective is to separate the landscape into landforms or landform segments that have similar use and management requirements. Each map unit is defined by a unique combination of soil components and/or miscellaneous areas in predictable proportions. Some components may be highly contrasting to the other components of the map unit. The presence of minor components in a map unit in no way diminishes the usefulness or accuracy of the data. The delineation of such landforms and landform segments on the map provides sufficient information for the development of resource plans. If intensive use of small areas is planned, onsite investigation is needed to define and locate the soils and miscellaneous areas.

Soil scientists make many field observations in the process of producing a soil map. The frequency of observation is dependent upon several factors, including scale of mapping, intensity of mapping, design of map units, complexity of the landscape, and experience of the soil scientist. Observations are made to test and refine the soil-landscape model and predictions and to verify the classification of the soils at specific locations. Once the soil-landscape model is refined, a significantly smaller number of measurements of individual soil properties are made and recorded. These measurements may include field measurements, such as those for color, depth to bedrock, and texture, and laboratory measurements, such as those for content of sand, silt, clay, salt, and other components. Properties of each soil typically vary from one point to another across the landscape.

Observations for map unit components are aggregated to develop ranges of characteristics for the components. The aggregated values are presented. Direct measurements do not exist for every property presented for every map unit component. Values for some properties are estimated from combinations of other properties.

While a soil survey is in progress, samples of some of the soils in the area generally are collected for laboratory analyses and for engineering tests. Soil scientists interpret the data from these analyses and tests as well as the field-observed characteristics and the soil properties to determine the expected behavior of the soils under different uses. Interpretations for all of the soils are field tested through observation of the soils in different uses and under different levels of management. Some interpretations are modified to fit local conditions, and some new interpretations are developed to meet local needs. Data are assembled from other sources, such as research information, production records, and field experience of specialists. For example, data on crop yields under defined levels of management are assembled from farm records and from field or plot experiments on the same kinds of soil.

Predictions about soil behavior are based not only on soil properties but also on such variables as climate and biological activity. Soil conditions are predictable over long periods of time, but they are not predictable from year to year. For example, soil scientists can predict with a fairly high degree of accuracy that a given soil will have a high water table within certain depths in most years, but they cannot predict that a high water table will always be at a specific level in the soil on a specific date.

After soil scientists located and identified the significant natural bodies of soil in the survey area, they drew the boundaries of these bodies on aerial photographs and

identified each as a specific map unit. Aerial photographs show trees, buildings, fields, roads, and rivers, all of which help in locating boundaries accurately.

Soil Map

The soil map section includes the soil map for the defined area of interest, a list of soil map units on the map and extent of each map unit, and cartographic symbols displayed on the map. Also presented are various metadata about data used to produce the map, and a description of each soil map unit.


70° 23' 1" W
70° 22' 46" W
388070
388100
388130
388160
388190
388220
388250
388280
388310
388340
388370
388400
43° 27' 38" N
43° 27' 31" N
4812900
4812870
4812840
4812810
4812780
4812750
4812720
4812690
W
Ba
UH
LyE
LyC
Soil Map may not be valid at this scale.
Map Scale: 1:1,520 if printed on A landscape (11" x 8.5") sheet.
N
Meters
0 20 40 80 120
Feet
0 50 100 200 300
Map projection: Web Mercator Corner coordinates: WGS84 Edge tics: UTM Zone 19N WGS84

MAP LEGEND

Area of Interest (AOI)
- Area of Interest (AOI)

Soils
- Soil Map Unit Polygons
- Soil Map Unit Lines
- Soil Map Unit Points

Special Point Features
- Blowout
- Borrow Pit
- Clay Spot
- Closed Depression
- Gravel Pit
- Gravelly Spot
- Landfill
- Lava Flow
- Marsh or swamp
- Mine or Quarry
- Miscellaneous Water
- Perennial Water
- Rock Outcrop
- Saline Spot
- Sandy Spot
- Severely Eroded Spot
- Sinkhole
- Slide or Slip
- Sodic Spot
- Spoil Area
- Stony Spot
- Very Stony Spot
- Wet Spot
- Other
- Special Line Features

Water Features
- Streams and Canals

Transportation
- Rails
- Interstate Highways
- US Routes
- Major Roads
- Local Roads

Background
- Aerial Photography

MAP INFORMATION

The soil surveys that comprise your AOI were mapped at 1:20,000.

Warning: Soil Map may not be valid at this scale.

Enlargement of maps beyond the scale of mapping can cause misunderstanding of the detail of mapping and accuracy of soil line placement. The maps do not show the small areas of contrasting soils that could have been shown at a more detailed scale.

Please rely on the bar scale on each map sheet for map measurements.

Source of Map: Natural Resources Conservation Service
Web Soil Survey URL:
Coordinate System: Web Mercator (EPSG:3857)

Maps from the Web Soil Survey are based on the Web Mercator projection, which preserves direction and shape but distorts distance and area. A projection that preserves area, such as the Albers equal-area conic projection, should be used if more accurate calculations of distance or area are required.

This product is generated from the USDA-NRCS certified data as of the version date(s) listed below.

Soil Survey Area: York County, Maine
Survey Area Data: Version 21, Aug 30, 2022

Soil map units are labeled (as space allows) for map scales 1:50,000 or larger.

Date(s) aerial images were photographed: Jun 19, 2020—Sep 20, 2020

The orthophoto or other base map on which the soil lines were compiled and digitized probably differs from the background imagery displayed on these maps. As a result, some minor shifting of map unit boundaries may be evident.

Map Unit Legend

Map Unit Symbol	Map Unit Name	Acres in AOI	Percent of AOI
Ba	Beaches, sand	0.3	5.5%
LyC	Lyman-Rock outcrop complex, 8 to 15 percent slopes	1.7	27.7%
LyE	Lyman-Rock outcrop complex, 15 to 80 percent slopes	3.3	54.8%
UH	Urban land-Hooksan complex, 0 to 8 percent slopes	0.2	3.1%
W	Water bodies	0.5	8.9%
Totals for Area of Interest		**6.1**	**100.0%**

Map Unit Descriptions

The map units delineated on the detailed soil maps in a soil survey represent the soils or miscellaneous areas in the survey area. The map unit descriptions, along with the maps, can be used to determine the composition and properties of a unit.

A map unit delineation on a soil map represents an area dominated by one or more major kinds of soil or miscellaneous areas. A map unit is identified and named according to the taxonomic classification of the dominant soils. Within a taxonomic class there are precisely defined limits for the properties of the soils. On the landscape, however, the soils are natural phenomena, and they have the characteristic variability of all natural phenomena. Thus, the range of some observed properties may extend beyond the limits defined for a taxonomic class. Areas of soils of a single taxonomic class rarely, if ever, can be mapped without including areas of other taxonomic classes. Consequently, every map unit is made up of the soils or miscellaneous areas for which it is named and some minor components that belong to taxonomic classes other than those of the major soils.

Most minor soils have properties similar to those of the dominant soil or soils in the map unit, and thus they do not affect use and management. These are called noncontrasting, or similar, components. They may or may not be mentioned in a particular map unit description. Other minor components, however, have properties and behavioral characteristics divergent enough to affect use or to require different management. These are called contrasting, or dissimilar, components. They generally are in small areas and could not be mapped separately because of the scale used. Some small areas of strongly contrasting soils or miscellaneous areas are identified by a special symbol on the maps. If included in the database for a given area, the contrasting minor components are identified in the map unit descriptions along with some characteristics of each. A few areas of minor components may not have been observed, and consequently they are not mentioned in the descriptions, especially where the pattern was so complex that it was impractical to make enough observations to identify all the soils and miscellaneous areas on the landscape.

The presence of minor components in a map unit in no way diminishes the usefulness or accuracy of the data. The objective of mapping is not to delineate pure taxonomic classes but rather to separate the landscape into landforms or landform segments that have similar use and management requirements. The delineation of such segments on the map provides sufficient information for the development of resource plans. If intensive use of small areas is planned, however, onsite investigation is needed to define and locate the soils and miscellaneous areas.

An identifying symbol precedes the map unit name in the map unit descriptions. Each description includes general facts about the unit and gives important soil properties and qualities.

Soils that have profiles that are almost alike make up a *soil series*. Except for differences in texture of the surface layer, all the soils of a series have major horizons that are similar in composition, thickness, and arrangement.

Soils of one series can differ in texture of the surface layer, slope, stoniness, salinity, degree of erosion, and other characteristics that affect their use. On the basis of such differences, a soil series is divided into *soil phases*. Most of the areas shown on the detailed soil maps are phases of soil series. The name of a soil phase commonly indicates a feature that affects use or management. For example, Alpha silt loam, 0 to 2 percent slopes, is a phase of the Alpha series.

Some map units are made up of two or more major soils or miscellaneous areas. These map units are complexes, associations, or undifferentiated groups.

A *complex* consists of two or more soils or miscellaneous areas in such an intricate pattern or in such small areas that they cannot be shown separately on the maps. The pattern and proportion of the soils or miscellaneous areas are somewhat similar in all areas. Alpha-Beta complex, 0 to 6 percent slopes, is an example.

An *association* is made up of two or more geographically associated soils or miscellaneous areas that are shown as one unit on the maps. Because of present or anticipated uses of the map units in the survey area, it was not considered practical or necessary to map the soils or miscellaneous areas separately. The pattern and relative proportion of the soils or miscellaneous areas are somewhat similar. Alpha-Beta association, 0 to 2 percent slopes, is an example.

An *undifferentiated group* is made up of two or more soils or miscellaneous areas that could be mapped individually but are mapped as one unit because similar interpretations can be made for use and management. The pattern and proportion of the soils or miscellaneous areas in a mapped area are not uniform. An area can be made up of only one of the major soils or miscellaneous areas, or it can be made up of all of them. Alpha and Beta soils, 0 to 2 percent slopes, is an example.

Some surveys include *miscellaneous areas*. Such areas have little or no soil material and support little or no vegetation. Rock outcrop is an example.

York County, Maine

Ba—Beaches, sand

Map Unit Setting

National map unit symbol: 2y080
Elevation: 0 to 20 feet
Mean annual precipitation: 36 to 71 inches
Mean annual air temperature: 39 to 55 degrees F
Frost-free period: 145 to 240 days
Farmland classification: Not prime farmland

Map Unit Composition

Beaches, sandy surface: 90 percent
Estimates are based on observations, descriptions, and transects of the mapunit.

Description of Beaches, Sandy Surface

Setting

Landform: Back-barrier beaches, barrier beaches, beaches, shores
Landform position (two-dimensional): Footslope
Landform position (three-dimensional): Riser
Down-slope shape: Convex
Across-slope shape: Linear
Parent material: Beach sand

Typical profile

C1 - 0 to 10 inches: sand

Properties and qualities

Slope: 0 to 8 percent
Runoff class: Negligible
Capacity of the most limiting layer to transmit water (Ksat): Moderately high to very high (1.42 to 99.90 in/hr)
Depth to water table: About 0 to 12 inches
Frequency of flooding: Very frequent
Maximum salinity: Moderately saline to strongly saline (8.0 to 16.0 mmhos/cm)
Available water supply, 0 to 60 inches: Very low (about 0.5 inches)

Interpretive groups

Land capability classification (irrigated): None specified
Land capability classification (nonirrigated): 8
Hydric soil rating: Unranked

LyC—Lyman-Rock outcrop complex, 8 to 15 percent slopes

Map Unit Setting

National map unit symbol: 2trqj
Elevation: 0 to 790 feet
Mean annual precipitation: 36 to 65 inches
Mean annual air temperature: 36 to 52 degrees F

Frost-free period: 60 to 160 days
Farmland classification: Not prime farmland

Map Unit Composition

Lyman, very stony, and similar soils: 62 percent
Rock outcrop: 25 percent
Estimates are based on observations, descriptions, and transects of the mapunit.

Description of Lyman, Very Stony

Setting

Landform: Hills, mountains
Landform position (two-dimensional): Summit, shoulder, backslope
Landform position (three-dimensional): Mountaintop, mountainbase, side slope, crest
Down-slope shape: Convex
Across-slope shape: Convex
Parent material: Loamy supraglacial till derived from granite and gneiss and/or loamy supraglacial till derived from phyllite and/or loamy supraglacial till derived from mica schist

Typical profile

Oe - 0 to 1 inches: moderately decomposed plant material
A - 1 to 3 inches: loam
E - 3 to 5 inches: fine sandy loam
Bhs - 5 to 7 inches: loam
Bs1 - 7 to 11 inches: loam
Bs2 - 11 to 18 inches: channery loam
R - 18 to 28 inches: bedrock

Properties and qualities

Slope: 8 to 15 percent
Surface area covered with cobbles, stones or boulders: 1.5 percent
Depth to restrictive feature: 11 to 24 inches to lithic bedrock
Drainage class: Somewhat excessively drained
Capacity of the most limiting layer to transmit water (Ksat): Very low to high (0.00 to 14.03 in/hr)
Depth to water table: More than 80 inches
Frequency of flooding: None
Frequency of ponding: None
Available water supply, 0 to 60 inches: Low (about 3.4 inches)

Interpretive groups

Land capability classification (irrigated): None specified
Land capability classification (nonirrigated): 6s
Hydrologic Soil Group: D
Ecological site: F144BY701ME - Shallow Till
Hydric soil rating: No

Description of Rock Outcrop

Setting

Landform: Hills, mountains
Landform position (two-dimensional): Summit, shoulder, backslope
Landform position (three-dimensional): Mountaintop, mountainbase, side slope, crest
Down-slope shape: Convex

Across-slope shape: Convex
Parent material: Igneous and metamorphic rock

Typical profile
R - 0 to 10 inches: bedrock

Properties and qualities
Slope: 8 to 15 percent
Depth to restrictive feature: 0 inches to lithic bedrock
Capacity of the most limiting layer to transmit water (Ksat): Very low to very high (0.00 to 14.17 in/hr)

Interpretive groups
Land capability classification (irrigated): None specified
Land capability classification (nonirrigated): 8s
Ecological site: F144BY801ME - Rockland (reserved)
Hydric soil rating: Unranked

LyE—Lyman-Rock outcrop complex, 15 to 80 percent slopes

Map Unit Setting
National map unit symbol: 2trqp
Elevation: 0 to 980 feet
Mean annual precipitation: 36 to 65 inches
Mean annual air temperature: 36 to 52 degrees F
Frost-free period: 60 to 160 days
Farmland classification: Not prime farmland

Map Unit Composition
Lyman, very stony, and similar soils: 60 percent
Rock outcrop: 30 percent
Estimates are based on observations, descriptions, and transects of the mapunit.

Description of Lyman, Very Stony

Setting
Landform: Hills, mountains
Landform position (two-dimensional): Summit, shoulder, backslope
Landform position (three-dimensional): Mountaintop, mountainflank, side slope, crest
Down-slope shape: Convex
Across-slope shape: Convex
Parent material: Loamy supraglacial till derived from granite and gneiss and/or loamy supraglacial till derived from phyllite and/or loamy supraglacial till derived from mica schist

Typical profile
Oe - 0 to 1 inches: moderately decomposed plant material
A - 1 to 3 inches: loam
E - 3 to 5 inches: fine sandy loam
Bhs - 5 to 7 inches: loam

Bs1 - 7 to 11 inches: loam
Bs2 - 11 to 18 inches: channery loam
R - 18 to 28 inches: bedrock

Properties and qualities

Slope: 15 to 80 percent
Surface area covered with cobbles, stones or boulders: 1.5 percent
Depth to restrictive feature: 11 to 24 inches to lithic bedrock
Drainage class: Somewhat excessively drained
Capacity of the most limiting layer to transmit water (Ksat): Very low to high (0.00 to 14.03 in/hr)
Depth to water table: More than 80 inches
Frequency of flooding: None
Frequency of ponding: None
Available water supply, 0 to 60 inches: Low (about 3.4 inches)

Interpretive groups

Land capability classification (irrigated): None specified
Land capability classification (nonirrigated): 7s
Hydrologic Soil Group: D
Ecological site: F144BY701ME - Shallow Till
Hydric soil rating: No

Description of Rock Outcrop

Setting

Landform: Hills, mountains
Landform position (two-dimensional): Summit, shoulder, backslope
Landform position (three-dimensional): Mountaintop, mountainflank, side slope, crest, free face
Down-slope shape: Convex
Across-slope shape: Convex
Parent material: Igneous and metamorphic rock

Typical profile

R - 0 to 10 inches: bedrock

Properties and qualities

Slope: 15 to 80 percent
Depth to restrictive feature: 0 inches to lithic bedrock
Capacity of the most limiting layer to transmit water (Ksat): Very low to very high (0.00 to 14.17 in/hr)

Interpretive groups

Land capability classification (irrigated): None specified
Land capability classification (nonirrigated): 8s
Ecological site: F144BY801ME - Rockland (reserved)
Hydric soil rating: Unranked

UH—Urban land-Hooksan complex, 0 to 8 percent slopes

Map Unit Setting

National map unit symbol: 2x1l1
Elevation: 0 to 50 feet
Mean annual precipitation: 36 to 71 inches
Mean annual air temperature: 39 to 55 degrees F
Frost-free period: 140 to 240 days
Farmland classification: Not prime farmland

Map Unit Composition

Urban land, coastal: 50 percent
Hooksan and similar soils: 30 percent
Estimates are based on observations, descriptions, and transects of the mapunit.

Description of Urban Land, Coastal

Setting

Landform: Dunes
Down-slope shape: Linear
Across-slope shape: Linear

Typical profile

M - 0 to 10 inches: cemented material

Properties and qualities

Slope: 0 to 8 percent
Depth to restrictive feature: 0 inches to manufactured layer
Runoff class: Very high
Capacity of the most limiting layer to transmit water (Ksat): Very low (0.00 to 0.00 in/hr)
Frequency of flooding: Rare
Available water supply, 0 to 60 inches: Very low (about 0.0 inches)

Interpretive groups

Land capability classification (irrigated): None specified
Land capability classification (nonirrigated): 8
Hydrologic Soil Group: D
Hydric soil rating: Unranked

Description of Hooksan

Setting

Landform: Dunes
Landform position (two-dimensional): Summit, shoulder, backslope, footslope
Landform position (three-dimensional): Side slope, base slope, crest
Down-slope shape: Convex
Across-slope shape: Convex, linear
Parent material: Sandy eolian deposits

Typical profile

C1 - 0 to 20 inches: sand
C2 - 20 to 30 inches: sand
C3 - 30 to 64 inches: sand

Properties and qualities

Slope: 0 to 8 percent
Depth to restrictive feature: More than 80 inches
Drainage class: Excessively drained
Runoff class: Negligible
Capacity of the most limiting layer to transmit water (Ksat): Very high (14.17 to 99.90 in/hr)
Depth to water table: More than 80 inches
Frequency of flooding: Rare
Frequency of ponding: None
Maximum salinity: Nonsaline (0.0 to 1.9 mmhos/cm)
Available water supply, 0 to 60 inches: Low (about 5.4 inches)

Interpretive groups

Land capability classification (irrigated): None specified
Land capability classification (nonirrigated): 7e
Hydrologic Soil Group: A
Ecological site: R149BY002MA - Coastal Dunes
Hydric soil rating: No

W—Water bodies

Map Unit Composition

Water: 100 percent
Estimates are based on observations, descriptions, and transects of the mapunit.

Description of Water

Setting

Landform: Hills

Appendix B

Pre Development HydroCAD Calculations

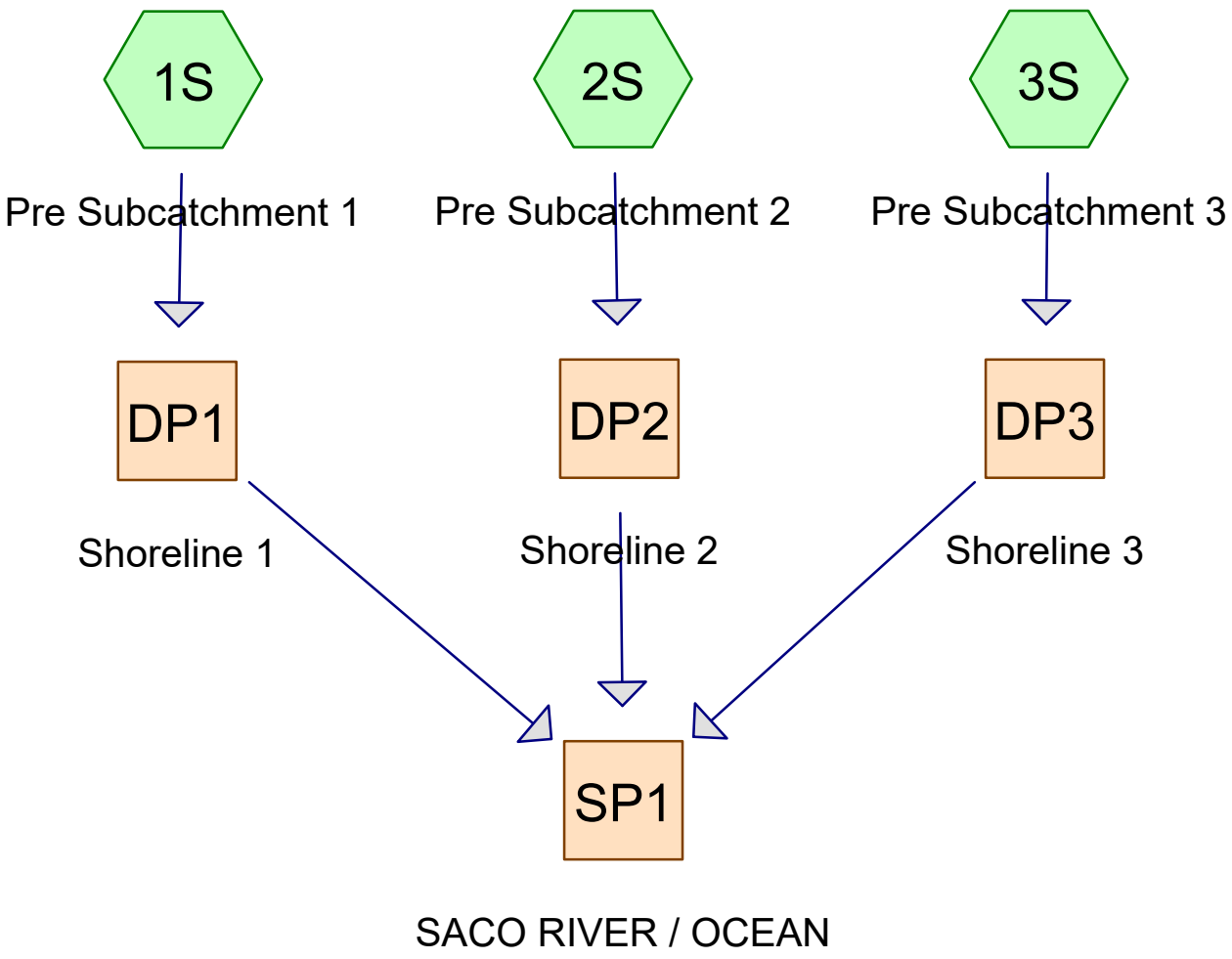

Subcat Reach Pond Link

Routing Diagram for UNE-PreDrainage
Prepared by GEI Consultants, Printed 7/9/2024
HydroCAD® 10.20-3c s/n 01250 © 2023 HydroCAD Software Solutions LLC

Project Notes

Defined 3 rainfall events from ME-York IDF

Rainfall Events Listing

Event#	Event Name	Storm Type	Curve	Mode	Duration (hours)	B/B	Depth (inches)	AMC
1	2-yr	Type III 24-hr		Default	24.00	1	3.30	2
2	10-yr	Type III 24-hr		Default	24.00	1	4.90	2
3	25-yr	Type III 24-hr		Default	24.00	1	6.20	2
4	100-yr	Type III 24-hr		Default	24.00	1	8.70	2

Area Listing (all nodes)

Area (acres)	CN	Description (subcatchment-numbers)
0.110	96	Gravel surface, HSG D (3S)
0.017	98	Roofs, HSG D (3S)
0.160	88	Sand Beach, HSG D (3S)
2.270	77	Woods, Good, HSG D (1S, 2S, 3S)
2.557	**79**	**TOTAL AREA**

Soil Listing (all nodes)

Area (acres)	Soil Group	Subcatchment Numbers
0.000	HSG A	
0.000	HSG B	
0.000	HSG C	
2.557	HSG D	1S, 2S, 3S
0.000	Other	
2.557		**TOTAL AREA**

Ground Covers (all nodes)

HSG-A (acres)	HSG-B (acres)	HSG-C (acres)	HSG-D (acres)	Other (acres)	Total (acres)	Ground Cover	Subcatchment Numbers
0.000	0.000	0.000	0.110	0.000	0.110	Gravel surface	3S
0.000	0.000	0.000	0.017	0.000	0.017	Roofs	3S
0.000	0.000	0.000	0.160	0.000	0.160	Sand Beach	3S
0.000	0.000	0.000	2.270	0.000	2.270	Woods, Good	1S, 2S, 3S
0.000	**0.000**	**0.000**	**2.557**	**0.000**	**2.557**	**TOTAL AREA**	

Time span=5.00-20.00 hrs, dt=0.05 hrs, 301 points
Runoff by SCS TR-20 method, UH=SCS, Weighted-CN
Reach routing by Stor-Ind+Trans method - Pond routing by Stor-Ind method

Subcatchment 1S: Pre Subcatchment 1 Runoff Area=20,023 sf 0.00% Impervious Runoff Depth>1.18"
Flow Length=138' Tc=4.0 min CN=77 Runoff=0.71 cfs 0.045 af

Subcatchment 2S: Pre Subcatchment 2 Runoff Area=27,744 sf 0.00% Impervious Runoff Depth>1.18"
Flow Length=198' Tc=12.7 min CN=77 Runoff=0.74 cfs 0.062 af

Subcatchment 3S: Pre Subcatchment 3 Runoff Area=63,622 sf 1.18% Impervious Runoff Depth>1.37"
Flow Length=445' Tc=7.0 min CN=80 Runoff=2.39 cfs 0.166 af

Reach DP1: Shoreline 1 Inflow=0.71 cfs 0.045 af
Outflow=0.71 cfs 0.045 af

Reach DP2: Shoreline 2 Inflow=0.74 cfs 0.062 af
Outflow=0.74 cfs 0.062 af

Reach DP3: Shoreline 3 Inflow=2.39 cfs 0.166 af
Outflow=2.39 cfs 0.166 af

Reach SP1: SACO RIVER / OCEAN Inflow=3.63 cfs 0.274 af
Outflow=3.63 cfs 0.274 af

Total Runoff Area = 2.557 ac Runoff Volume = 0.274 af Average Runoff Depth = 1.29"
99.33% Pervious = 2.540 ac 0.67% Impervious = 0.017 ac

Summary for Subcatchment 1S: Pre Subcatchment 1

Runoff = 0.71 cfs @ 12.07 hrs, Volume= 0.045 af, Depth> 1.18"
Routed to Reach DP1 : Shoreline 1

Runoff by SCS TR-20 method, UH=SCS, Weighted-CN, Time Span= 5.00-20.00 hrs, dt= 0.05 hrs
Type III 24-hr 2-yr Rainfall=3.30"

Area (sf)	CN	Description
20,023	77	Woods, Good, HSG D
20,023		100.00% Pervious Area

Tc (min)	Length (feet)	Slope (ft/ft)	Velocity (ft/sec)	Capacity (cfs)	Description
3.1	20	0.1000	0.11		**Sheet Flow, Tc-1** Woods: Light underbrush n= 0.400 P2= 3.30"
0.9	118	0.1780	2.11		**Shallow Concentrated Flow, Tc-2** Woodland Kv= 5.0 fps
4.0	138	Total			

Subcatchment 1S: Pre Subcatchment 1

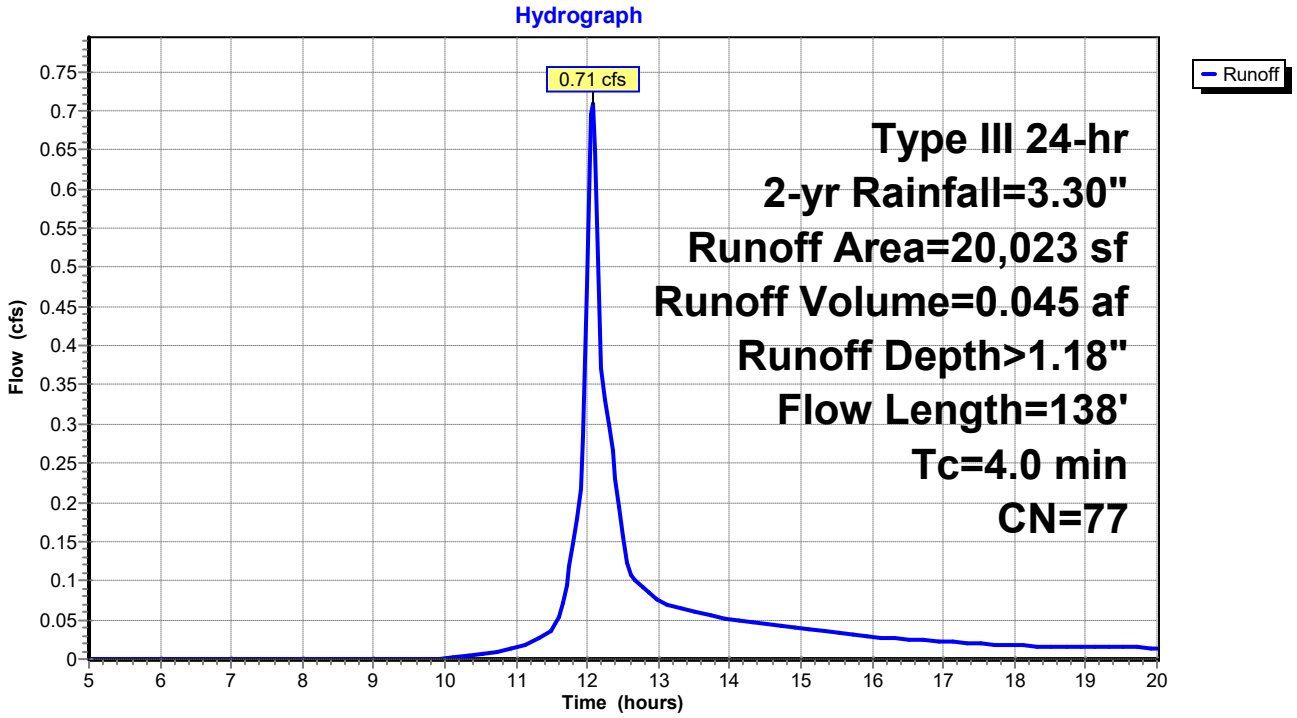

Summary for Subcatchment 2S: Pre Subcatchment 2

Runoff = 0.74 cfs @ 12.19 hrs, Volume= 0.062 af, Depth> 1.18"
Routed to Reach DP2 : Shoreline 2

Runoff by SCS TR-20 method, UH=SCS, Weighted-CN, Time Span= 5.00-20.00 hrs, dt= 0.05 hrs
Type III 24-hr 2-yr Rainfall=3.30"

Area (sf)	CN	Description
27,744	77	Woods, Good, HSG D
27,744		100.00% Pervious Area

Tc (min)	Length (feet)	Slope (ft/ft)	Velocity (ft/sec)	Capacity (cfs)	Description
12.3	148	0.1689	0.20		**Sheet Flow, Tc-1** Woods: Light underbrush n= 0.400 P2= 3.30"
0.4	50	0.1800	2.12		**Shallow Concentrated Flow, Tc-2** Woodland Kv= 5.0 fps
12.7	198	Total			

Subcatchment 2S: Pre Subcatchment 2

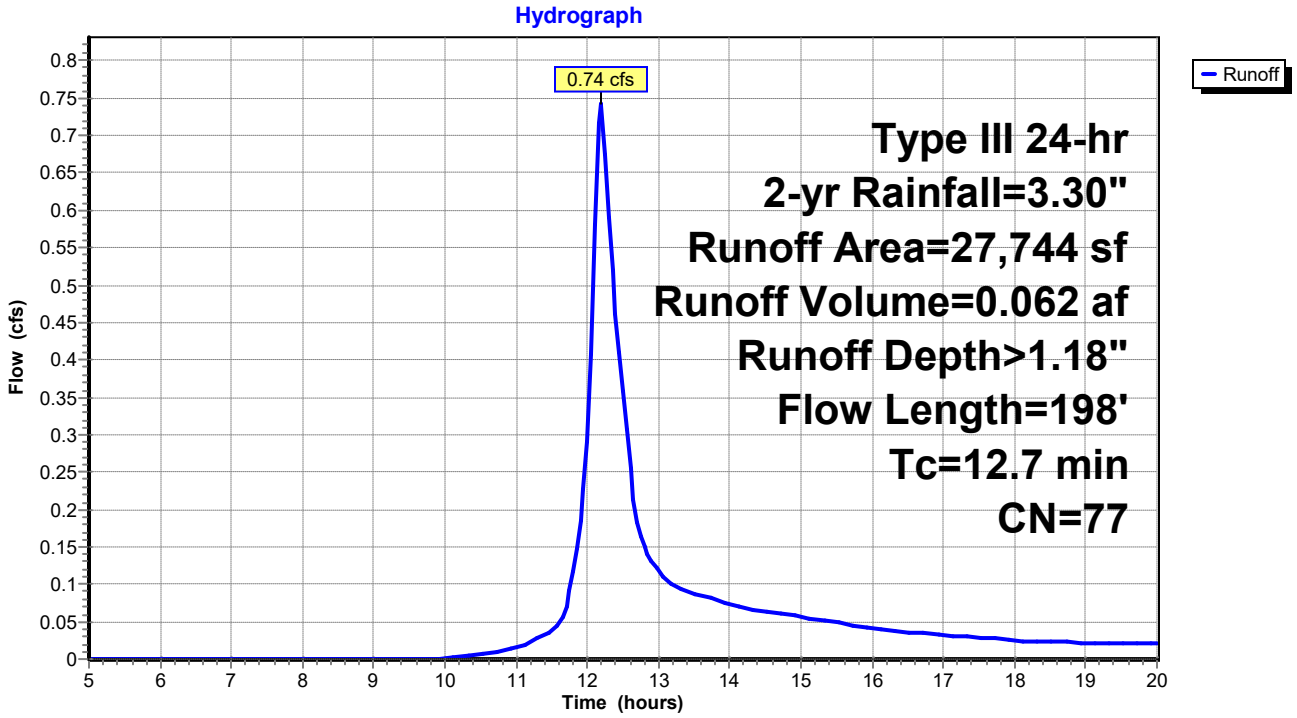

Summary for Subcatchment 3S: Pre Subcatchment 3

Runoff = 2.39 cfs @ 12.11 hrs, Volume= 0.166 af, Depth> 1.37"
Routed to Reach DP3 : Shoreline 3

Runoff by SCS TR-20 method, UH=SCS, Weighted-CN, Time Span= 5.00-20.00 hrs, dt= 0.05 hrs
Type III 24-hr 2-yr Rainfall=3.30"

	Area (sf)	CN	Description
	51,121	77	Woods, Good, HSG D
	751	98	Roofs, HSG D
	4,795	96	Gravel surface, HSG D
*	6,955	88	Sand Beach, HSG D
	63,622	80	Weighted Average
	62,871		98.82% Pervious Area
	751		1.18% Impervious Area

Tc (min)	Length (feet)	Slope (ft/ft)	Velocity (ft/sec)	Capacity (cfs)	Description
2.7	23	0.1740	0.14		**Sheet Flow, Tc-1** Woods: Light underbrush n= 0.400 P2= 3.30"
1.0	70	0.0571	1.19		**Shallow Concentrated Flow, Tc-2** Woodland Kv= 5.0 fps
0.5	170	0.1059	5.24		**Shallow Concentrated Flow, Tc-3** Unpaved Kv= 16.1 fps
2.5	140	0.0357	0.94		**Shallow Concentrated Flow, Tc-4** Woodland Kv= 5.0 fps
0.3	42	0.0714	2.67		**Shallow Concentrated Flow, Tc-4** Nearly Bare & Untilled Kv= 10.0 fps
7.0	445	Total			

Subcatchment 3S: Pre Subcatchment 3

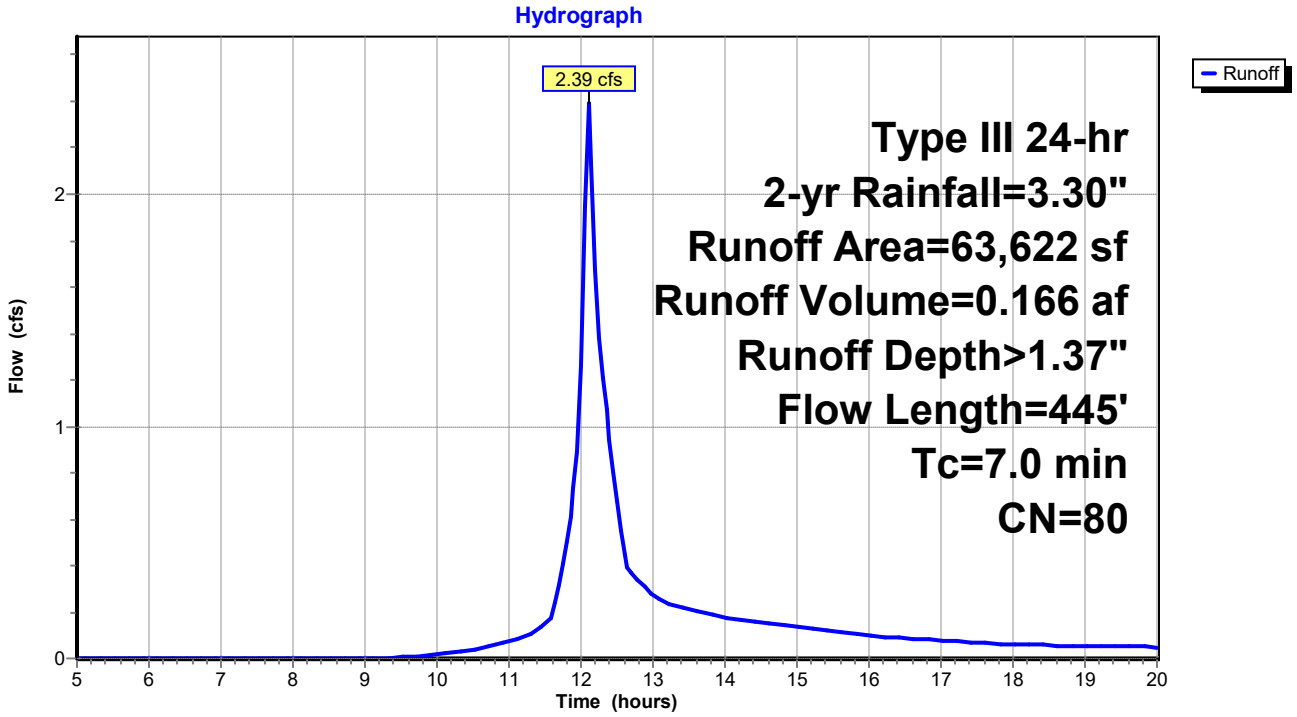

Summary for Reach DP1: Shoreline 1

Inflow Area = 0.460 ac, 0.00% Impervious, Inflow Depth > 1.18" for 2-yr event
Inflow = 0.71 cfs @ 12.07 hrs, Volume= 0.045 af
Outflow = 0.71 cfs @ 12.07 hrs, Volume= 0.045 af, Atten= 0%, Lag= 0.0 min
Routed to Reach SP1 : SACO RIVER / OCEAN

Routing by Stor-Ind+Trans method, Time Span= 5.00-20.00 hrs, dt= 0.05 hrs

Reach DP1: Shoreline 1

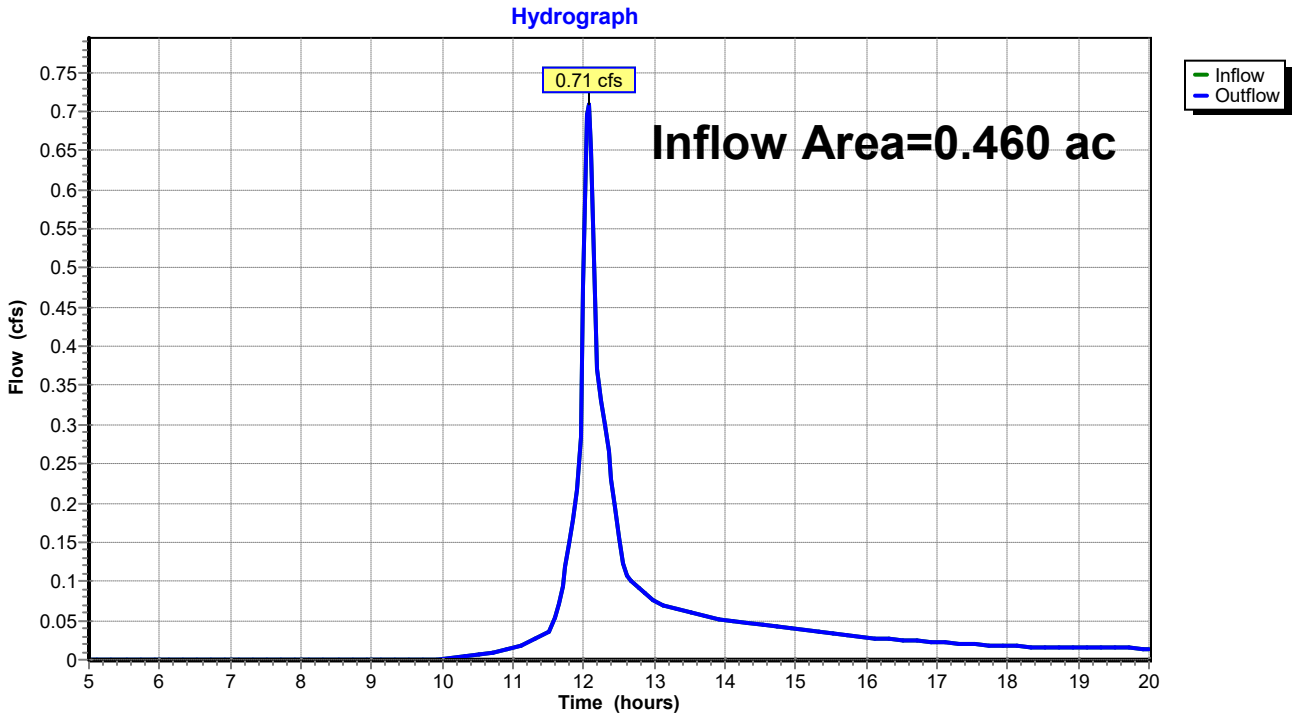

Summary for Reach DP2: Shoreline 2

Inflow Area = 0.637 ac, 0.00% Impervious, Inflow Depth > 1.18" for 2-yr event
Inflow = 0.74 cfs @ 12.19 hrs, Volume= 0.062 af
Outflow = 0.74 cfs @ 12.19 hrs, Volume= 0.062 af, Atten= 0%, Lag= 0.0 min
Routed to Reach SP1 : SACO RIVER / OCEAN

Routing by Stor-Ind+Trans method, Time Span= 5.00-20.00 hrs, dt= 0.05 hrs

Reach DP2: Shoreline 2

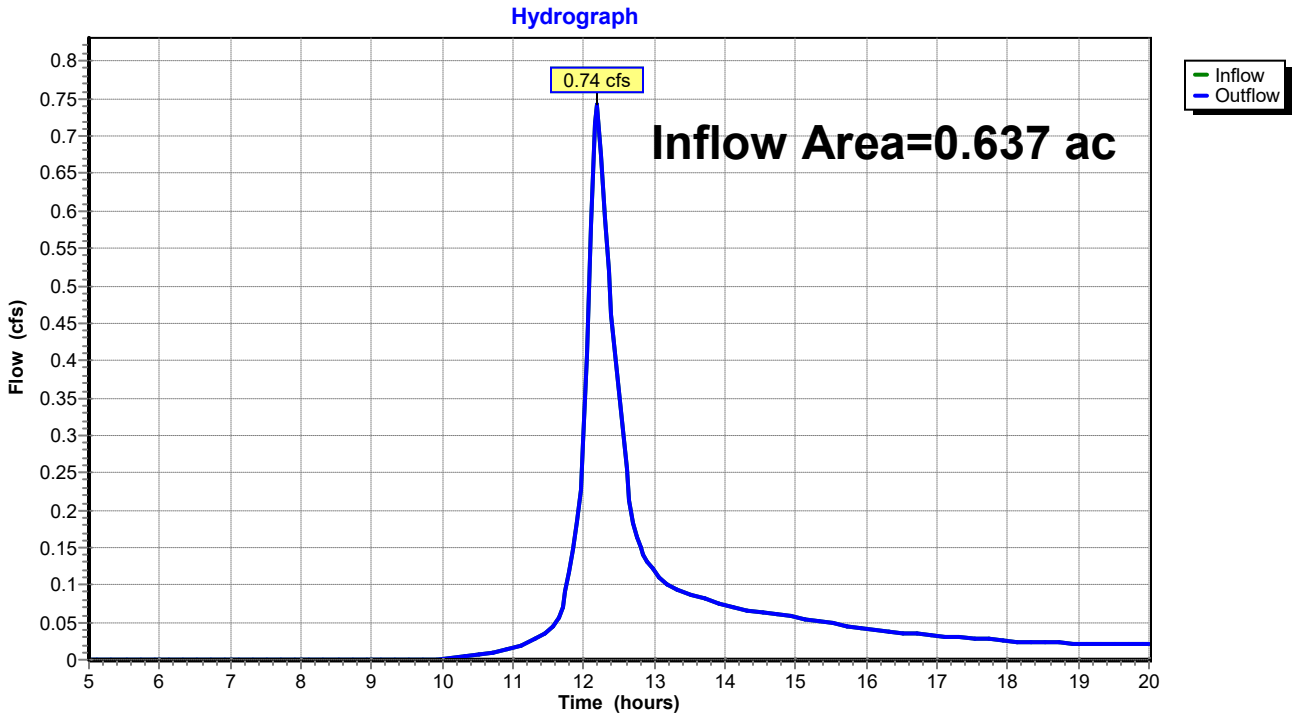

Summary for Reach DP3: Shoreline 3

Inflow Area = 1.461 ac, 1.18% Impervious, Inflow Depth > 1.37" for 2-yr event
Inflow = 2.39 cfs @ 12.11 hrs, Volume= 0.166 af
Outflow = 2.39 cfs @ 12.11 hrs, Volume= 0.166 af, Atten= 0%, Lag= 0.0 min
Routed to Reach SP1 : SACO RIVER / OCEAN

Routing by Stor-Ind+Trans method, Time Span= 5.00-20.00 hrs, dt= 0.05 hrs

Reach DP3: Shoreline 3

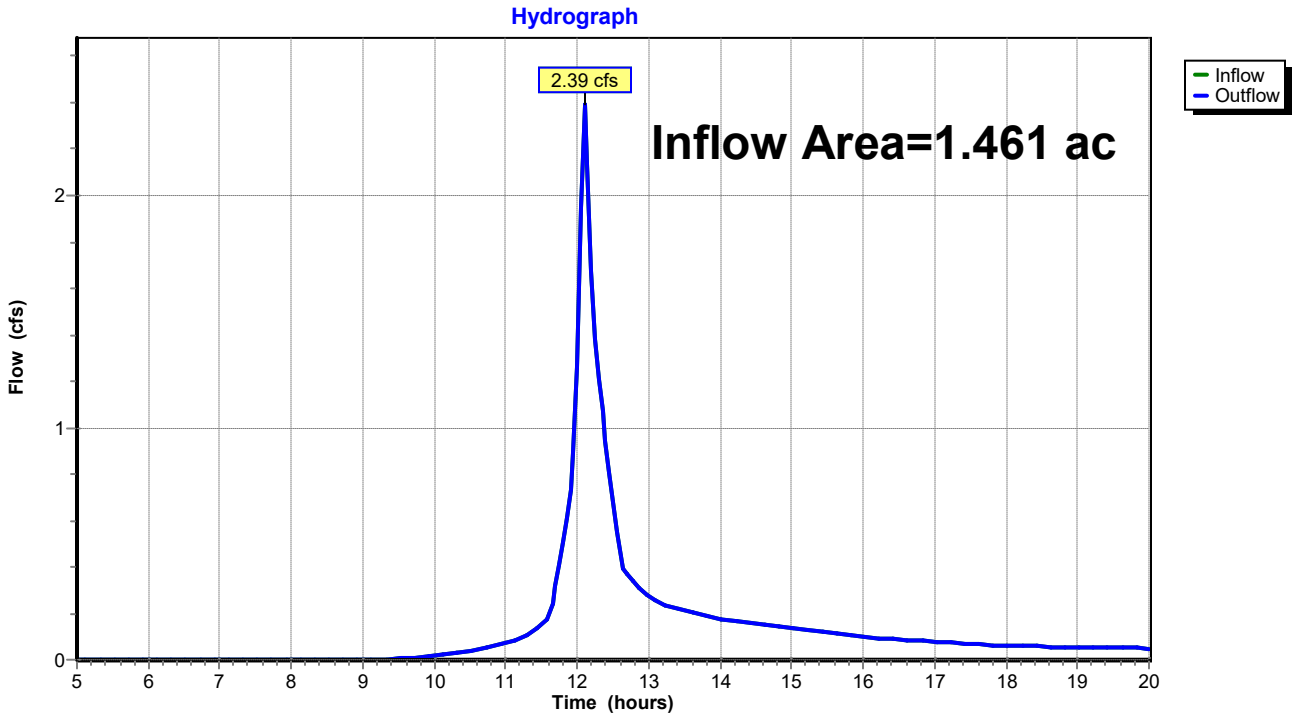

Summary for Reach SP1: SACO RIVER / OCEAN

Inflow Area = 2.557 ac, 0.67% Impervious, Inflow Depth > 1.29" for 2-yr event
Inflow = 3.63 cfs @ 12.11 hrs, Volume= 0.274 af
Outflow = 3.63 cfs @ 12.11 hrs, Volume= 0.274 af, Atten= 0%, Lag= 0.0 min

Routing by Stor-Ind+Trans method, Time Span= 5.00-20.00 hrs, dt= 0.05 hrs

Reach SP1: SACO RIVER / OCEAN

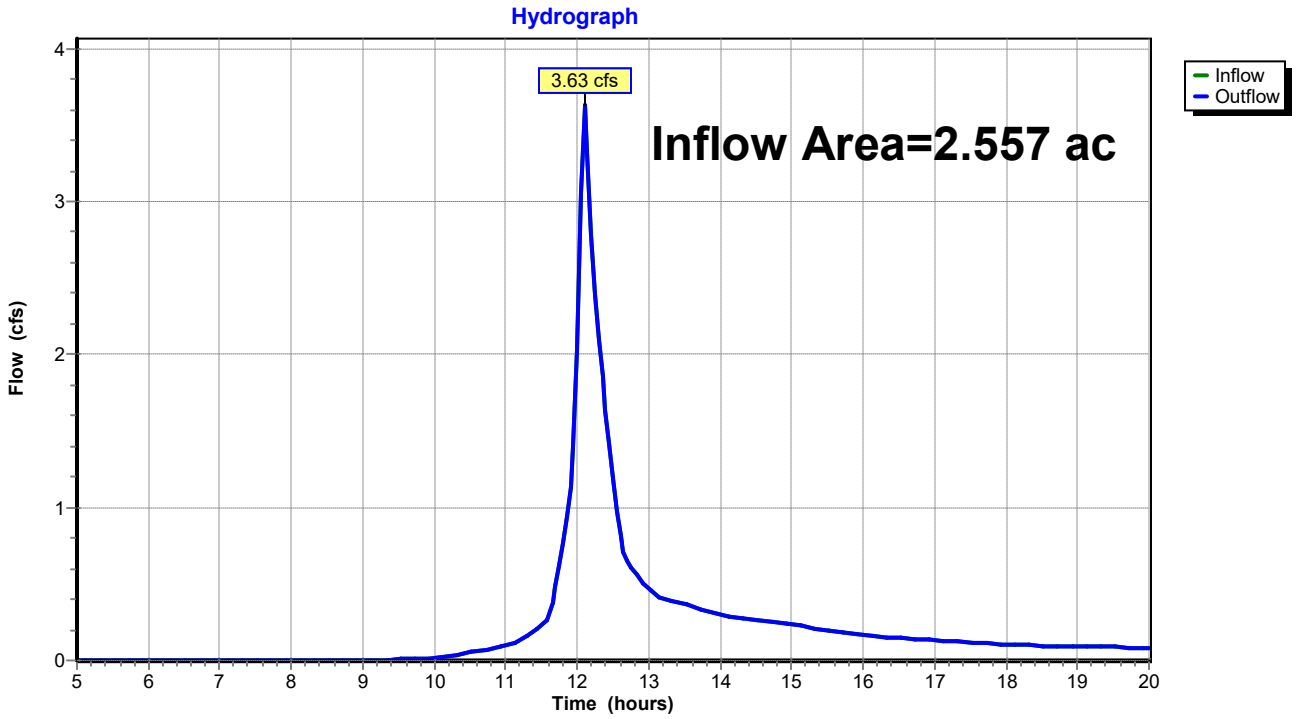

Time span=5.00-20.00 hrs, dt=0.05 hrs, 301 points
Runoff by SCS TR-20 method, UH=SCS, Weighted-CN
Reach routing by Stor-Ind+Trans method - Pond routing by Stor-Ind method

Subcatchment 1S: Pre Subcatchment 1 Runoff Area=20,023 sf 0.00% Impervious Runoff Depth>2.36"
Flow Length=138' Tc=4.0 min CN=77 Runoff=1.44 cfs 0.091 af

Subcatchment 2S: Pre Subcatchment 2 Runoff Area=27,744 sf 0.00% Impervious Runoff Depth>2.36"
Flow Length=198' Tc=12.7 min CN=77 Runoff=1.51 cfs 0.125 af

Subcatchment 3S: Pre Subcatchment 3 Runoff Area=63,622 sf 1.18% Impervious Runoff Depth>2.62"
Flow Length=445' Tc=7.0 min CN=80 Runoff=4.58 cfs 0.319 af

Reach DP1: Shoreline 1 Inflow=1.44 cfs 0.091 af
Outflow=1.44 cfs 0.091 af

Reach DP2: Shoreline 2 Inflow=1.51 cfs 0.125 af
Outflow=1.51 cfs 0.125 af

Reach DP3: Shoreline 3 Inflow=4.58 cfs 0.319 af
Outflow=4.58 cfs 0.319 af

Reach SP1: SACO RIVER / OCEAN Inflow=7.10 cfs 0.534 af
Outflow=7.10 cfs 0.534 af

Total Runoff Area = 2.557 ac Runoff Volume = 0.534 af Average Runoff Depth = 2.51"
99.33% Pervious = 2.540 ac 0.67% Impervious = 0.017 ac

Summary for Subcatchment 1S: Pre Subcatchment 1

Runoff = 1.44 cfs @ 12.06 hrs, Volume= 0.091 af, Depth> 2.36"
Routed to Reach DP1 : Shoreline 1

Runoff by SCS TR-20 method, UH=SCS, Weighted-CN, Time Span= 5.00-20.00 hrs, dt= 0.05 hrs
Type III 24-hr 10-yr Rainfall=4.90"

Area (sf)	CN	Description
20,023	77	Woods, Good, HSG D
20,023		100.00% Pervious Area

Tc (min)	Length (feet)	Slope (ft/ft)	Velocity (ft/sec)	Capacity (cfs)	Description
3.1	20	0.1000	0.11		**Sheet Flow, Tc-1** Woods: Light underbrush n= 0.400 P2= 3.30"
0.9	118	0.1780	2.11		**Shallow Concentrated Flow, Tc-2** Woodland Kv= 5.0 fps
4.0	138	Total			

Subcatchment 1S: Pre Subcatchment 1

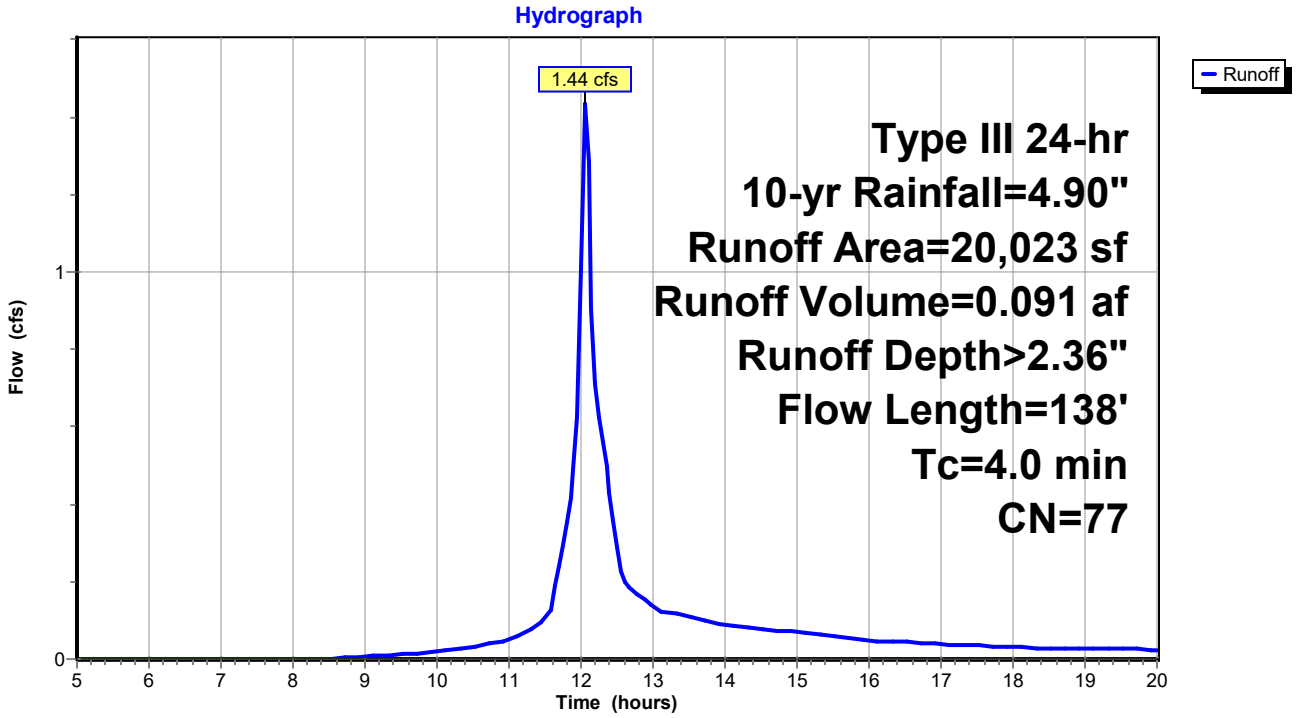

Summary for Subcatchment 2S: Pre Subcatchment 2

Runoff = 1.51 cfs @ 12.18 hrs, Volume= 0.125 af, Depth> 2.36"
Routed to Reach DP2 : Shoreline 2

Runoff by SCS TR-20 method, UH=SCS, Weighted-CN, Time Span= 5.00-20.00 hrs, dt= 0.05 hrs
Type III 24-hr 10-yr Rainfall=4.90"

Area (sf)	CN	Description
27,744	77	Woods, Good, HSG D
27,744		100.00% Pervious Area

Tc (min)	Length (feet)	Slope (ft/ft)	Velocity (ft/sec)	Capacity (cfs)	Description
12.3	148	0.1689	0.20		**Sheet Flow, Tc-1** Woods: Light underbrush n= 0.400 P2= 3.30"
0.4	50	0.1800	2.12		**Shallow Concentrated Flow, Tc-2** Woodland Kv= 5.0 fps
12.7	198	Total			

Subcatchment 2S: Pre Subcatchment 2

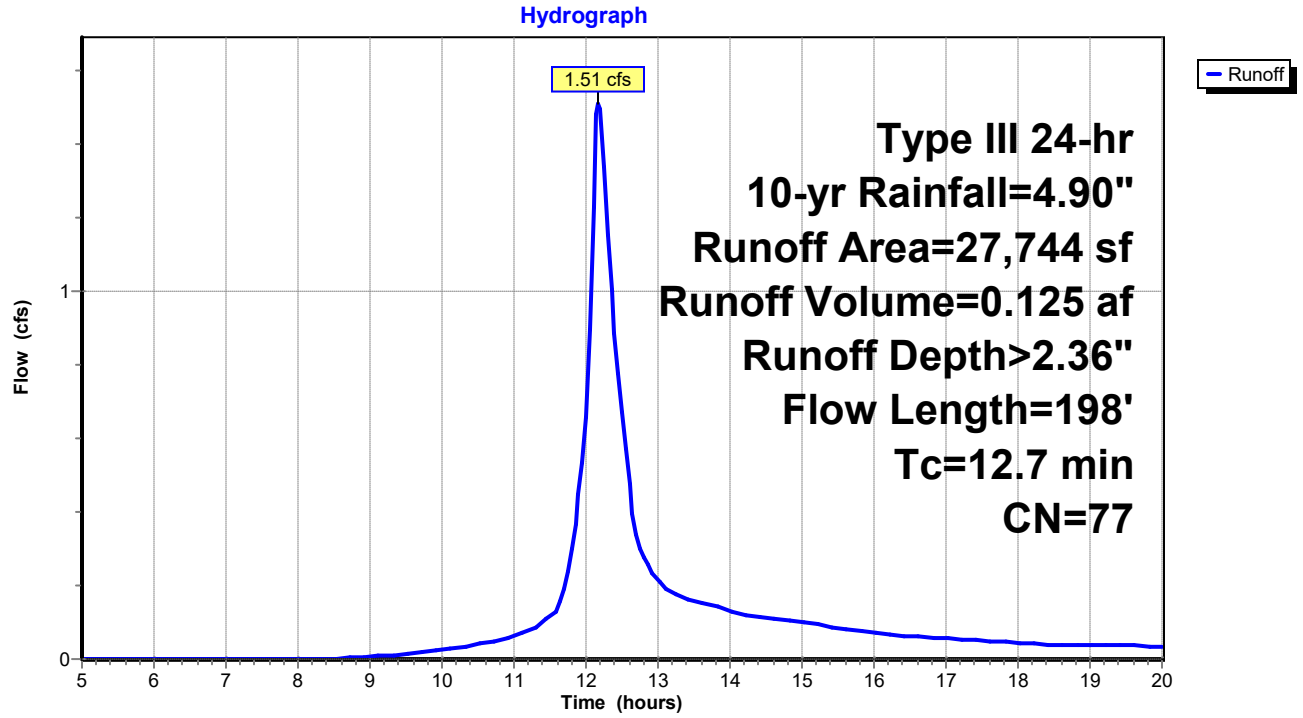

Summary for Subcatchment 3S: Pre Subcatchment 3

Runoff = 4.58 cfs @ 12.10 hrs, Volume= 0.319 af, Depth> 2.62"
Routed to Reach DP3 : Shoreline 3

Runoff by SCS TR-20 method, UH=SCS, Weighted-CN, Time Span= 5.00-20.00 hrs, dt= 0.05 hrs
Type III 24-hr 10-yr Rainfall=4.90"

	Area (sf)	CN	Description
	51,121	77	Woods, Good, HSG D
	751	98	Roofs, HSG D
	4,795	96	Gravel surface, HSG D
*	6,955	88	Sand Beach, HSG D
	63,622	80	Weighted Average
	62,871		98.82% Pervious Area
	751		1.18% Impervious Area

Tc (min)	Length (feet)	Slope (ft/ft)	Velocity (ft/sec)	Capacity (cfs)	Description
2.7	23	0.1740	0.14		**Sheet Flow, Tc-1** Woods: Light underbrush n= 0.400 P2= 3.30"
1.0	70	0.0571	1.19		**Shallow Concentrated Flow, Tc-2** Woodland Kv= 5.0 fps
0.5	170	0.1059	5.24		**Shallow Concentrated Flow, Tc-3** Unpaved Kv= 16.1 fps
2.5	140	0.0357	0.94		**Shallow Concentrated Flow, Tc-4** Woodland Kv= 5.0 fps
0.3	42	0.0714	2.67		**Shallow Concentrated Flow, Tc-4** Nearly Bare & Untilled Kv= 10.0 fps
7.0	445	Total			

Subcatchment 3S: Pre Subcatchment 3

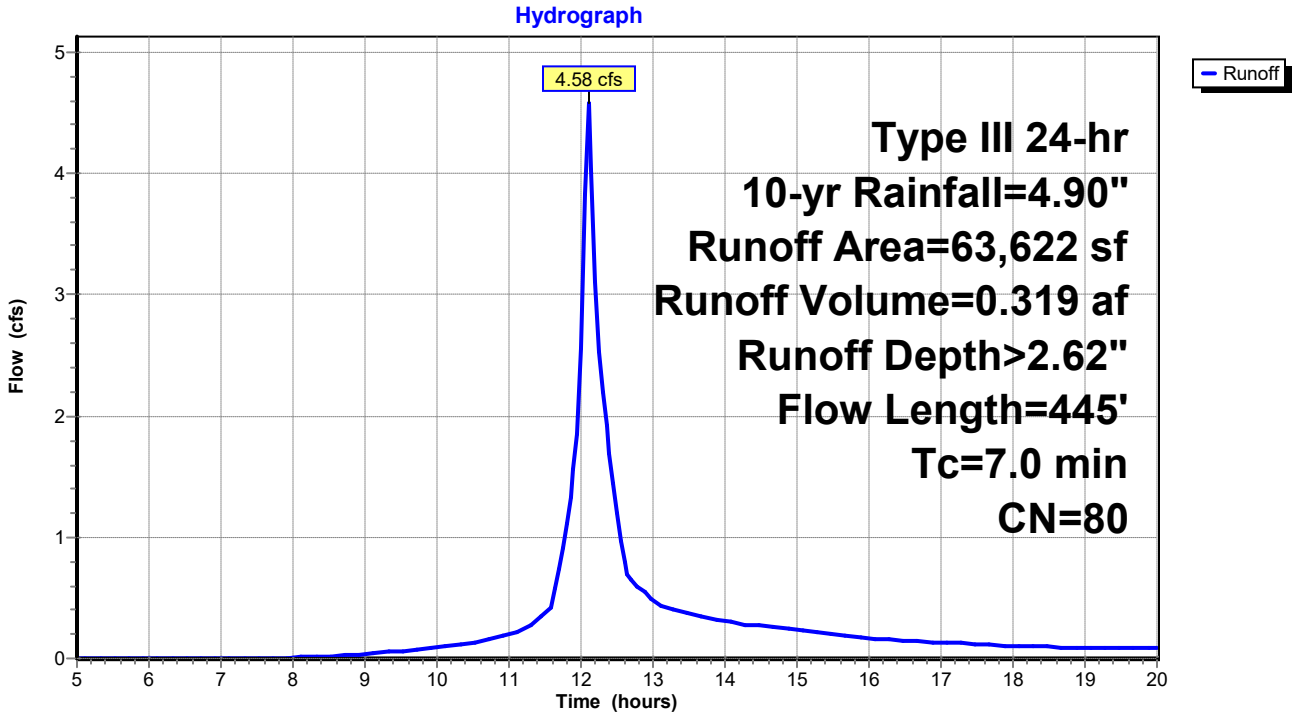

Summary for Reach DP1: Shoreline 1

Inflow Area = 0.460 ac, 0.00% Impervious, Inflow Depth > 2.36" for 10-yr event
Inflow = 1.44 cfs @ 12.06 hrs, Volume= 0.091 af
Outflow = 1.44 cfs @ 12.06 hrs, Volume= 0.091 af, Atten= 0%, Lag= 0.0 min
Routed to Reach SP1 : SACO RIVER / OCEAN

Routing by Stor-Ind+Trans method, Time Span= 5.00-20.00 hrs, dt= 0.05 hrs

Reach DP1: Shoreline 1

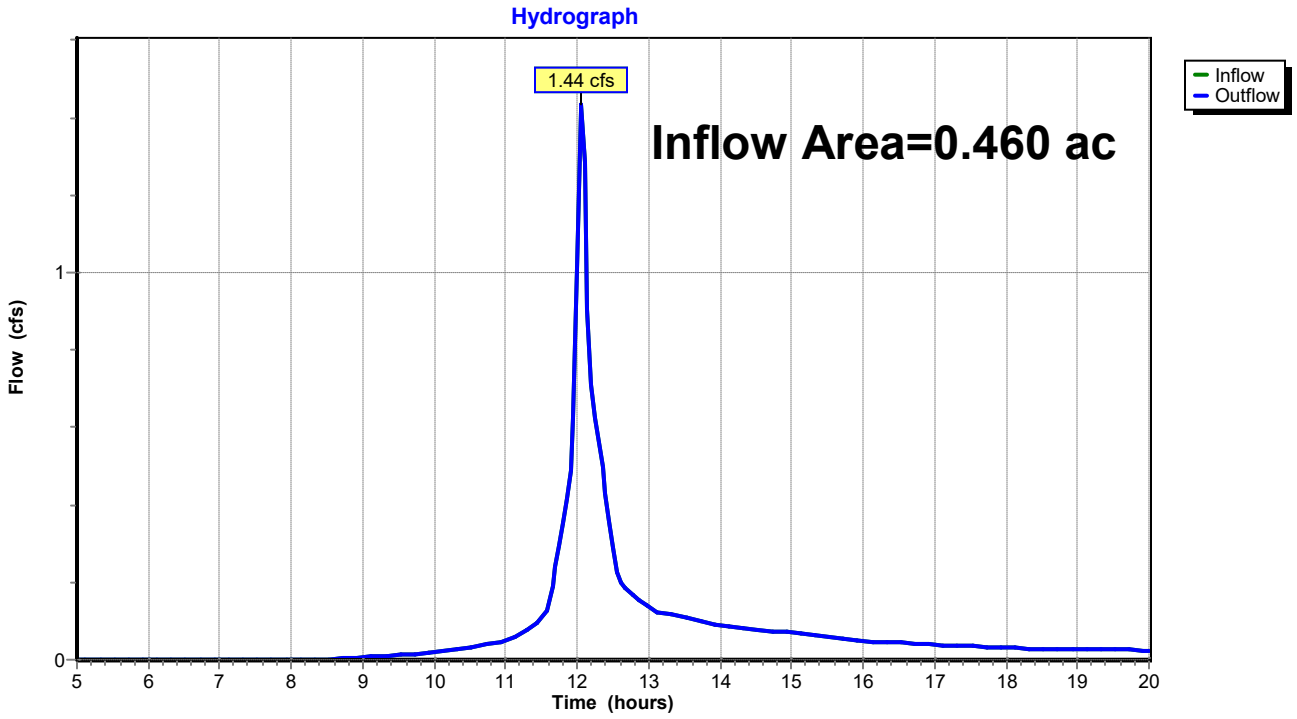

Summary for Reach DP2: Shoreline 2

Inflow Area = 0.637 ac, 0.00% Impervious, Inflow Depth > 2.36" for 10-yr event
Inflow = 1.51 cfs @ 12.18 hrs, Volume= 0.125 af
Outflow = 1.51 cfs @ 12.18 hrs, Volume= 0.125 af, Atten= 0%, Lag= 0.0 min
Routed to Reach SP1 : SACO RIVER / OCEAN

Routing by Stor-Ind+Trans method, Time Span= 5.00-20.00 hrs, dt= 0.05 hrs

Reach DP2: Shoreline 2

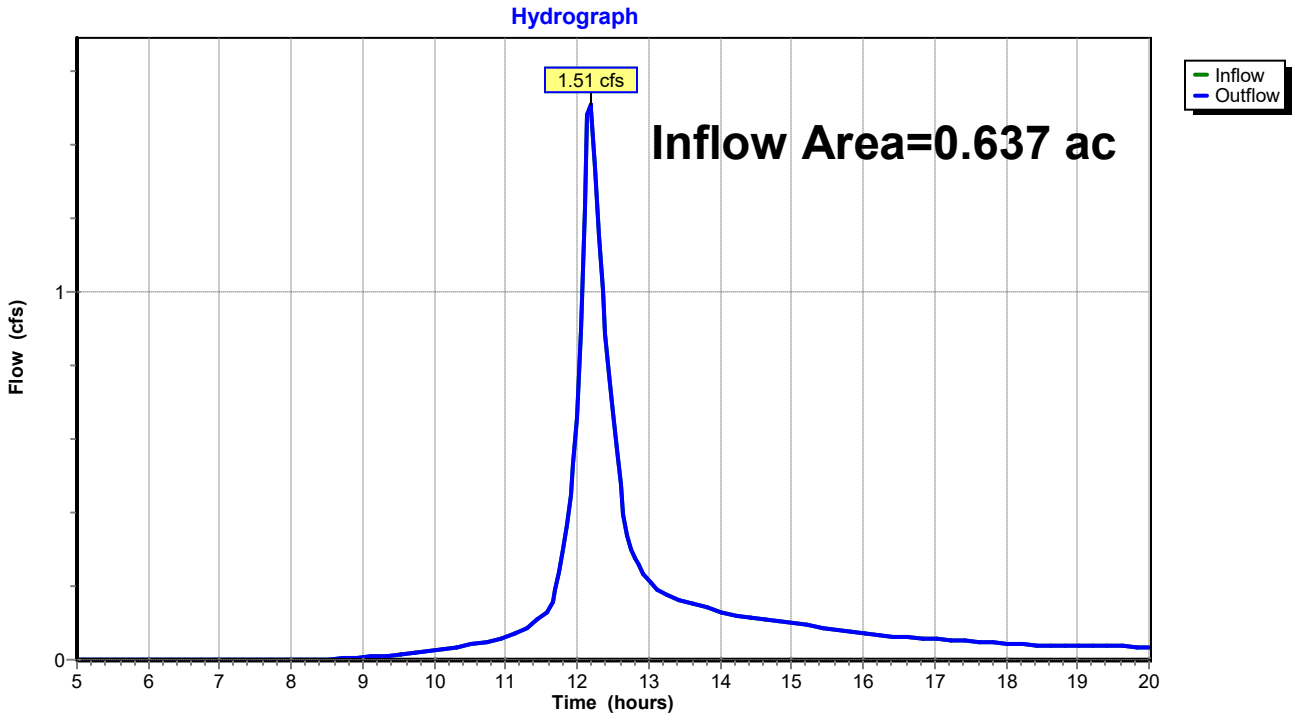

Summary for Reach DP3: Shoreline 3

Inflow Area = 1.461 ac, 1.18% Impervious, Inflow Depth > 2.62" for 10-yr event
Inflow = 4.58 cfs @ 12.10 hrs, Volume= 0.319 af
Outflow = 4.58 cfs @ 12.10 hrs, Volume= 0.319 af, Atten= 0%, Lag= 0.0 min
Routed to Reach SP1 : SACO RIVER / OCEAN

Routing by Stor-Ind+Trans method, Time Span= 5.00-20.00 hrs, dt= 0.05 hrs

Reach DP3: Shoreline 3

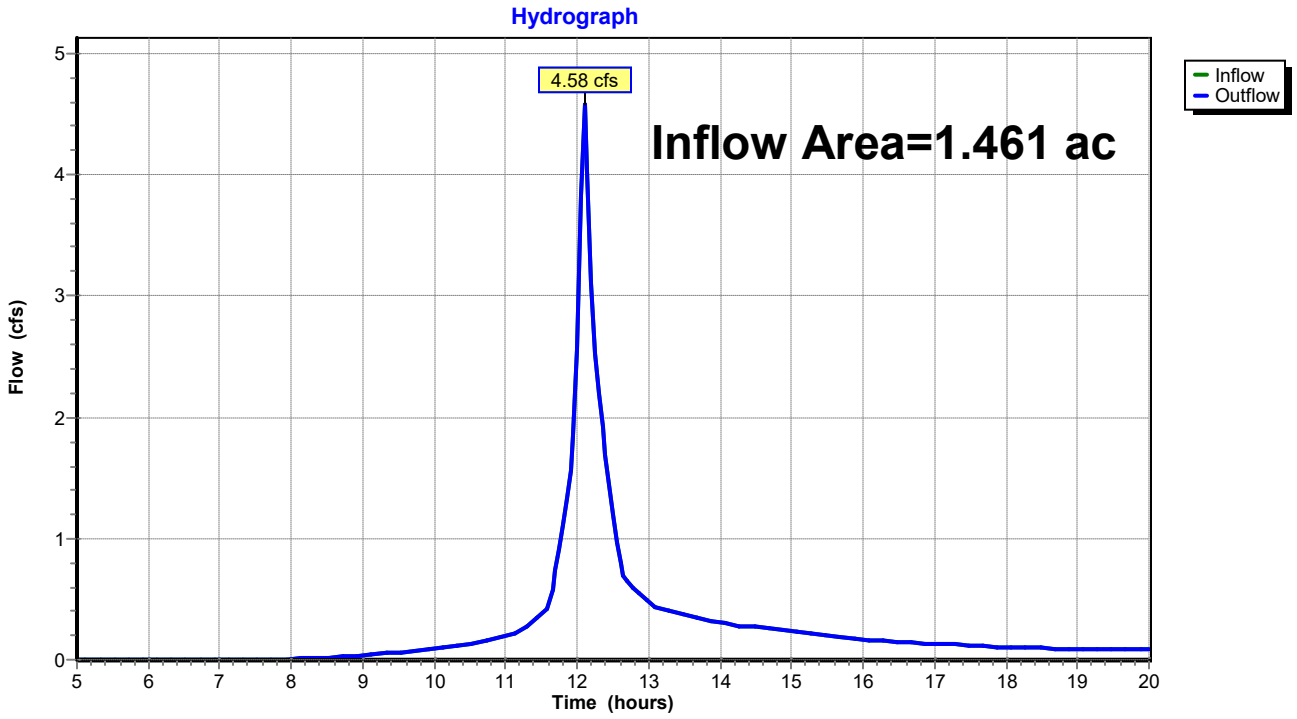

Summary for Reach SP1: SACO RIVER / OCEAN

Inflow Area = 2.557 ac, 0.67% Impervious, Inflow Depth > 2.51" for 10-yr event
Inflow = 7.10 cfs @ 12.10 hrs, Volume= 0.534 af
Outflow = 7.10 cfs @ 12.10 hrs, Volume= 0.534 af, Atten= 0%, Lag= 0.0 min

Routing by Stor-Ind+Trans method, Time Span= 5.00-20.00 hrs, dt= 0.05 hrs

Reach SP1: SACO RIVER / OCEAN

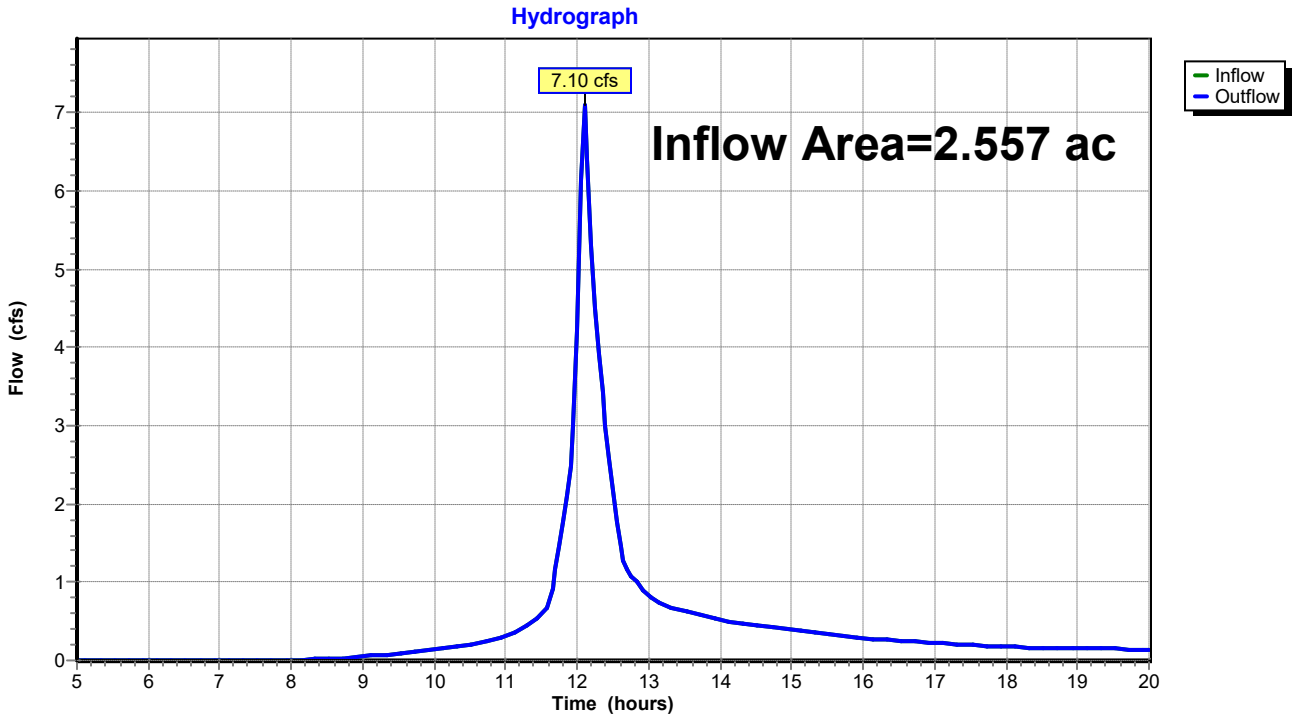

Time span=5.00-20.00 hrs, dt=0.05 hrs, 301 points
Runoff by SCS TR-20 method, UH=SCS, Weighted-CN
Reach routing by Stor-Ind+Trans method - Pond routing by Stor-Ind method

Subcatchment 1S: Pre Subcatchment 1 Runoff Area=20,023 sf 0.00% Impervious Runoff Depth>3.42"
Flow Length=138' Tc=4.0 min CN=77 Runoff=2.07 cfs 0.131 af

Subcatchment 2S: Pre Subcatchment 2 Runoff Area=27,744 sf 0.00% Impervious Runoff Depth>3.41"
Flow Length=198' Tc=12.7 min CN=77 Runoff=2.17 cfs 0.181 af

Subcatchment 3S: Pre Subcatchment 3 Runoff Area=63,622 sf 1.18% Impervious Runoff Depth>3.72"
Flow Length=445' Tc=7.0 min CN=80 Runoff=6.44 cfs 0.452 af

Reach DP1: Shoreline 1 Inflow=2.07 cfs 0.131 af
Outflow=2.07 cfs 0.131 af

Reach DP2: Shoreline 2 Inflow=2.17 cfs 0.181 af
Outflow=2.17 cfs 0.181 af

Reach DP3: Shoreline 3 Inflow=6.44 cfs 0.452 af
Outflow=6.44 cfs 0.452 af

Reach SP1: SACO RIVER / OCEAN Inflow=10.07 cfs 0.764 af
Outflow=10.07 cfs 0.764 af

Total Runoff Area = 2.557 ac Runoff Volume = 0.764 af Average Runoff Depth = 3.59"
99.33% Pervious = 2.540 ac 0.67% Impervious = 0.017 ac

Summary for Subcatchment 1S: Pre Subcatchment 1

Runoff = 2.07 cfs @ 12.06 hrs, Volume= 0.131 af, Depth> 3.42"
Routed to Reach DP1 : Shoreline 1

Runoff by SCS TR-20 method, UH=SCS, Weighted-CN, Time Span= 5.00-20.00 hrs, dt= 0.05 hrs
Type III 24-hr 25-yr Rainfall=6.20"

Area (sf)	CN	Description
20,023	77	Woods, Good, HSG D
20,023		100.00% Pervious Area

Tc (min)	Length (feet)	Slope (ft/ft)	Velocity (ft/sec)	Capacity (cfs)	Description
3.1	20	0.1000	0.11		**Sheet Flow, Tc-1** Woods: Light underbrush n= 0.400 P2= 3.30"
0.9	118	0.1780	2.11		**Shallow Concentrated Flow, Tc-2** Woodland Kv= 5.0 fps
4.0	138	Total			

Subcatchment 1S: Pre Subcatchment 1

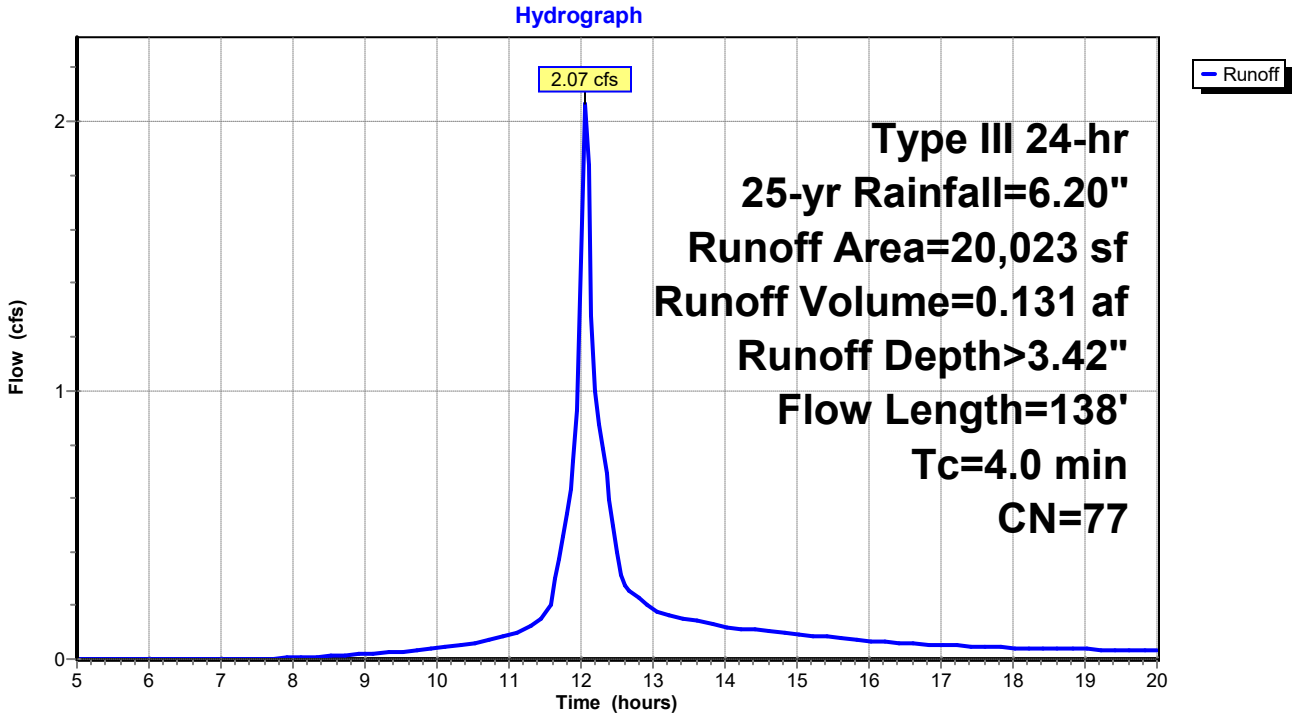

Summary for Subcatchment 2S: Pre Subcatchment 2

Runoff = 2.17 cfs @ 12.18 hrs, Volume= 0.181 af, Depth> 3.41"
Routed to Reach DP2 : Shoreline 2

Runoff by SCS TR-20 method, UH=SCS, Weighted-CN, Time Span= 5.00-20.00 hrs, dt= 0.05 hrs
Type III 24-hr 25-yr Rainfall=6.20"

Area (sf)	CN	Description
27,744	77	Woods, Good, HSG D
27,744		100.00% Pervious Area

Tc (min)	Length (feet)	Slope (ft/ft)	Velocity (ft/sec)	Capacity (cfs)	Description
12.3	148	0.1689	0.20		**Sheet Flow, Tc-1** Woods: Light underbrush n= 0.400 P2= 3.30"
0.4	50	0.1800	2.12		**Shallow Concentrated Flow, Tc-2** Woodland Kv= 5.0 fps
12.7	198	Total			

Subcatchment 2S: Pre Subcatchment 2

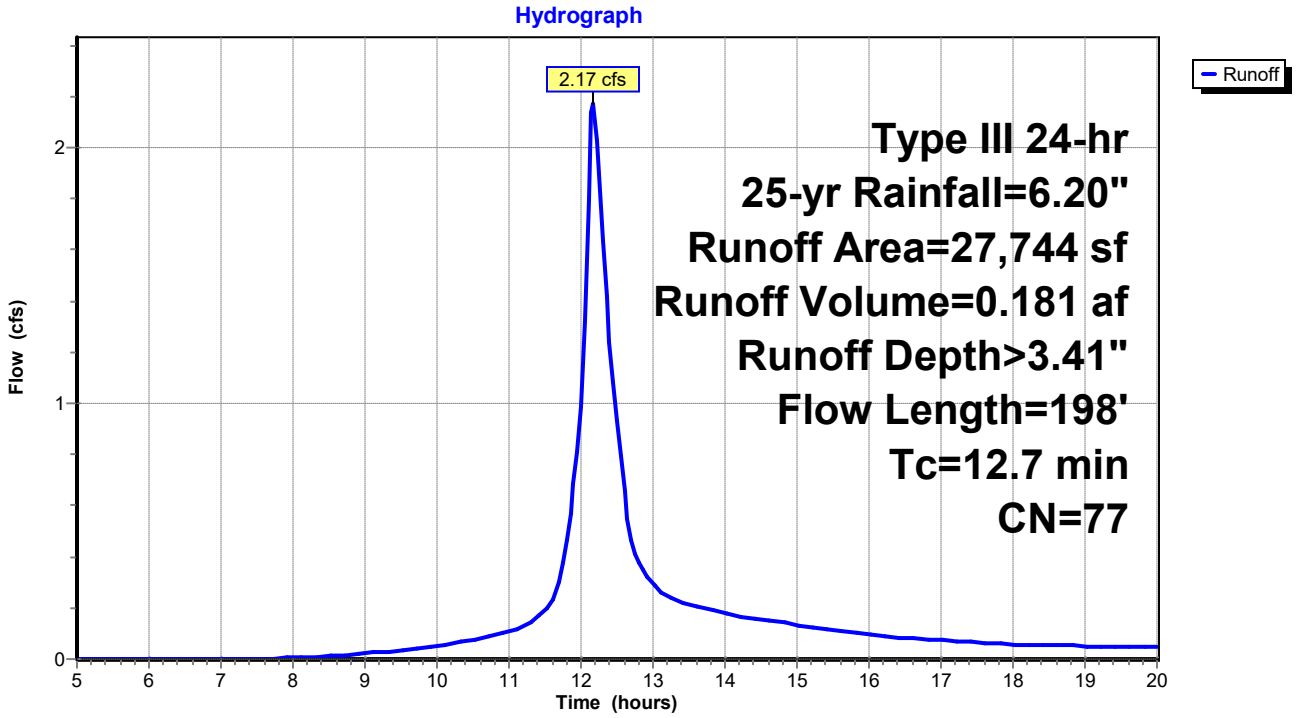

Summary for Subcatchment 3S: Pre Subcatchment 3

Runoff = 6.44 cfs @ 12.10 hrs, Volume= 0.452 af, Depth> 3.72"
Routed to Reach DP3 : Shoreline 3

Runoff by SCS TR-20 method, UH=SCS, Weighted-CN, Time Span= 5.00-20.00 hrs, dt= 0.05 hrs
Type III 24-hr 25-yr Rainfall=6.20"

	Area (sf)	CN	Description
	51,121	77	Woods, Good, HSG D
	751	98	Roofs, HSG D
	4,795	96	Gravel surface, HSG D
*	6,955	88	Sand Beach, HSG D
	63,622	80	Weighted Average
	62,871		98.82% Pervious Area
	751		1.18% Impervious Area

Tc (min)	Length (feet)	Slope (ft/ft)	Velocity (ft/sec)	Capacity (cfs)	Description
2.7	23	0.1740	0.14		**Sheet Flow, Tc-1** Woods: Light underbrush n= 0.400 P2= 3.30"
1.0	70	0.0571	1.19		**Shallow Concentrated Flow, Tc-2** Woodland Kv= 5.0 fps
0.5	170	0.1059	5.24		**Shallow Concentrated Flow, Tc-3** Unpaved Kv= 16.1 fps
2.5	140	0.0357	0.94		**Shallow Concentrated Flow, Tc-4** Woodland Kv= 5.0 fps
0.3	42	0.0714	2.67		**Shallow Concentrated Flow, Tc-4** Nearly Bare & Untilled Kv= 10.0 fps
7.0	445	Total			

Subcatchment 3S: Pre Subcatchment 3

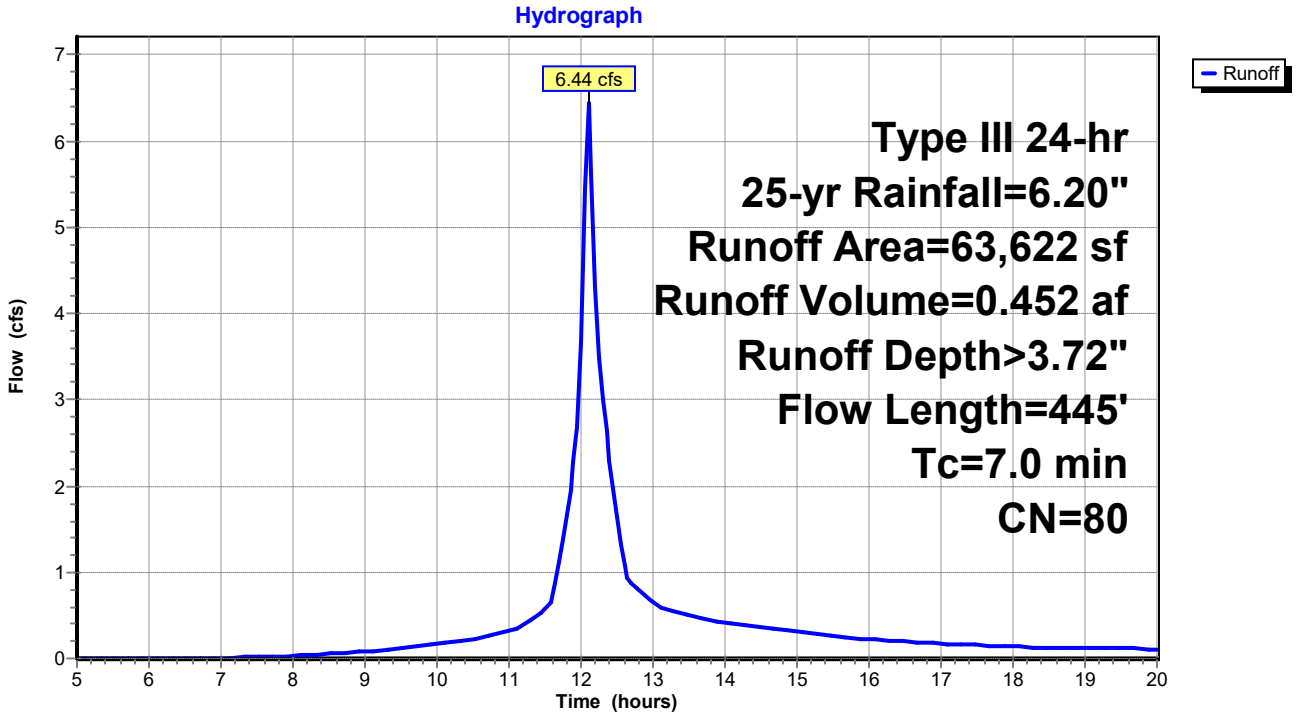

Summary for Reach DP1: Shoreline 1

Inflow Area = 0.460 ac, 0.00% Impervious, Inflow Depth > 3.42" for 25-yr event
Inflow = 2.07 cfs @ 12.06 hrs, Volume= 0.131 af
Outflow = 2.07 cfs @ 12.06 hrs, Volume= 0.131 af, Atten= 0%, Lag= 0.0 min
Routed to Reach SP1 : SACO RIVER / OCEAN

Routing by Stor-Ind+Trans method, Time Span= 5.00-20.00 hrs, dt= 0.05 hrs

Reach DP1: Shoreline 1

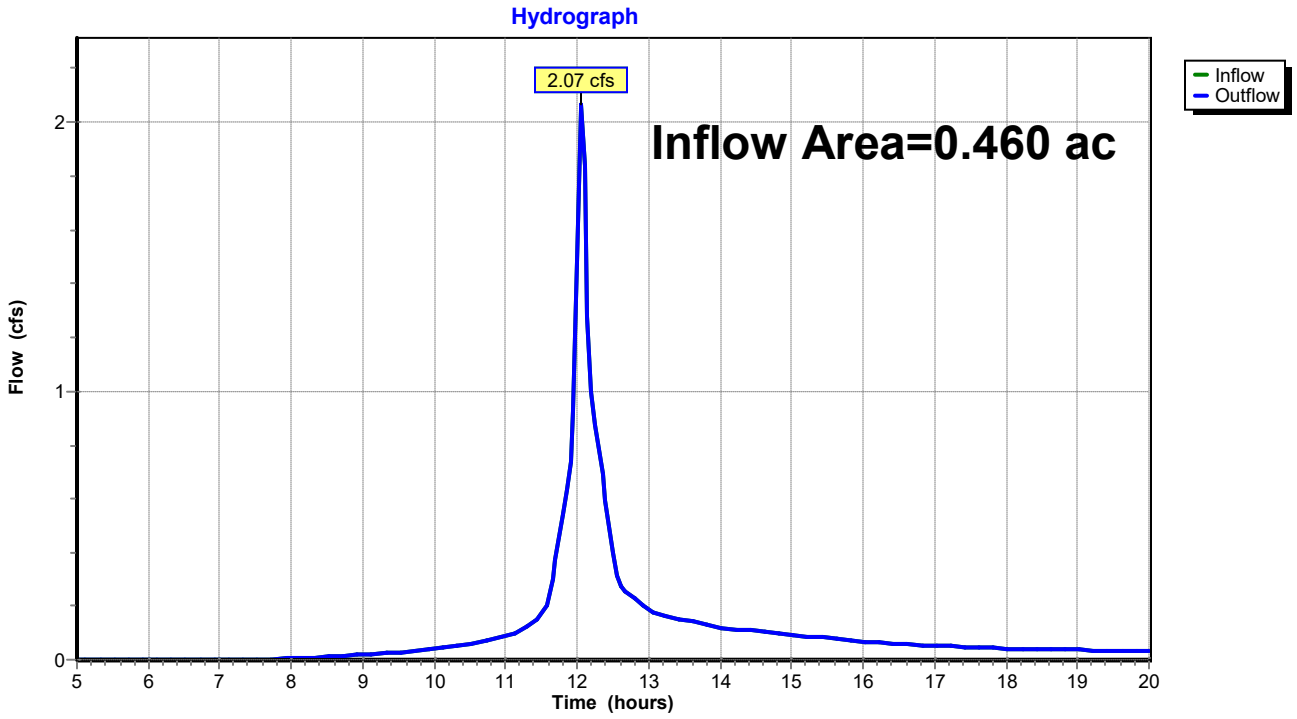

Summary for Reach DP2: Shoreline 2

Inflow Area = 0.637 ac, 0.00% Impervious, Inflow Depth > 3.41" for 25-yr event
Inflow = 2.17 cfs @ 12.18 hrs, Volume= 0.181 af
Outflow = 2.17 cfs @ 12.18 hrs, Volume= 0.181 af, Atten= 0%, Lag= 0.0 min
Routed to Reach SP1 : SACO RIVER / OCEAN

Routing by Stor-Ind+Trans method, Time Span= 5.00-20.00 hrs, dt= 0.05 hrs

Reach DP2: Shoreline 2

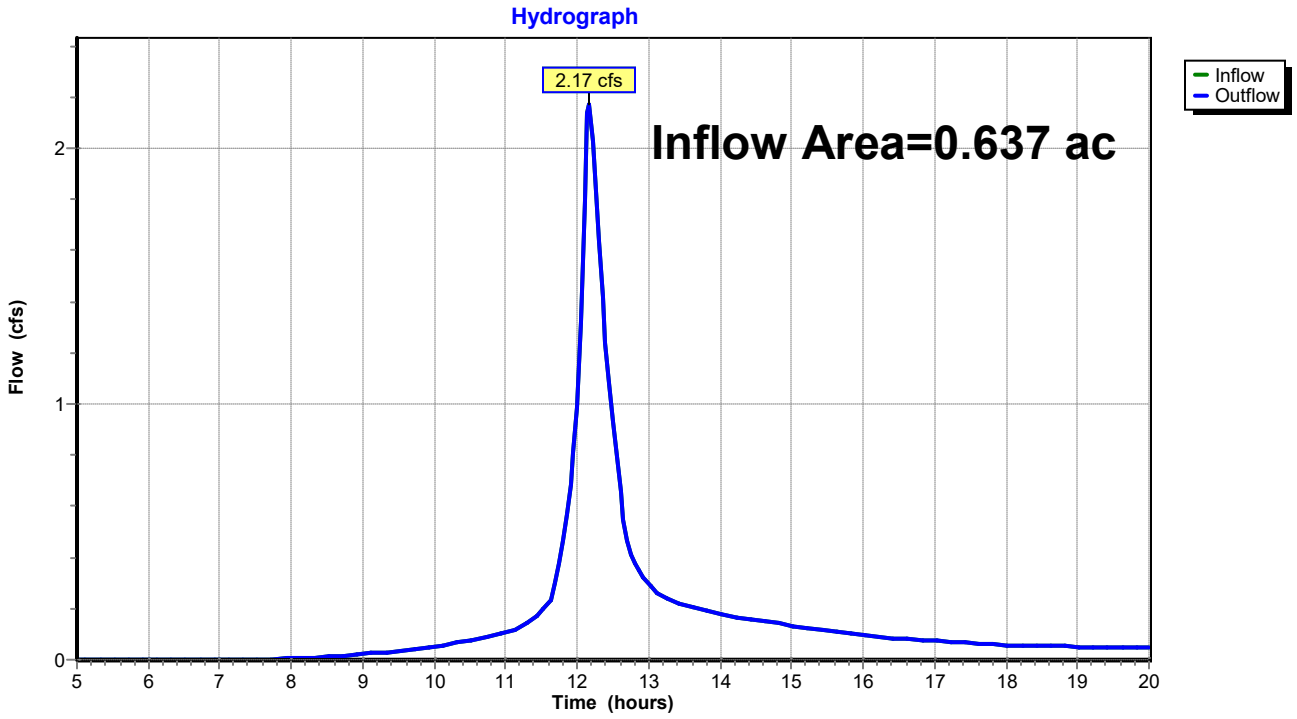

Summary for Reach DP3: Shoreline 3

Inflow Area = 1.461 ac, 1.18% Impervious, Inflow Depth > 3.72" for 25-yr event
Inflow = 6.44 cfs @ 12.10 hrs, Volume= 0.452 af
Outflow = 6.44 cfs @ 12.10 hrs, Volume= 0.452 af, Atten= 0%, Lag= 0.0 min
Routed to Reach SP1 : SACO RIVER / OCEAN

Routing by Stor-Ind+Trans method, Time Span= 5.00-20.00 hrs, dt= 0.05 hrs

Reach DP3: Shoreline 3

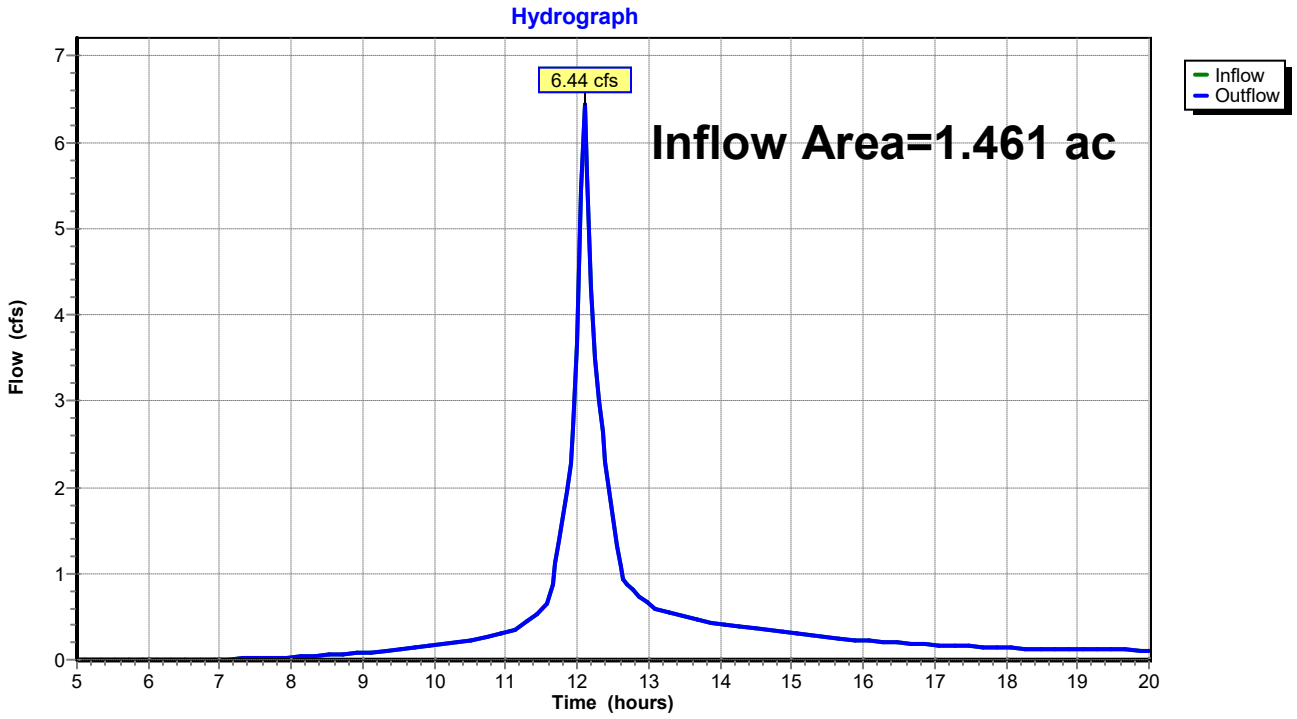

Summary for Reach SP1: SACO RIVER / OCEAN

Inflow Area = 2.557 ac, 0.67% Impervious, Inflow Depth > 3.59" for 25-yr event
Inflow = 10.07 cfs @ 12.10 hrs, Volume= 0.764 af
Outflow = 10.07 cfs @ 12.10 hrs, Volume= 0.764 af, Atten= 0%, Lag= 0.0 min

Routing by Stor-Ind+Trans method, Time Span= 5.00-20.00 hrs, dt= 0.05 hrs

Reach SP1: SACO RIVER / OCEAN

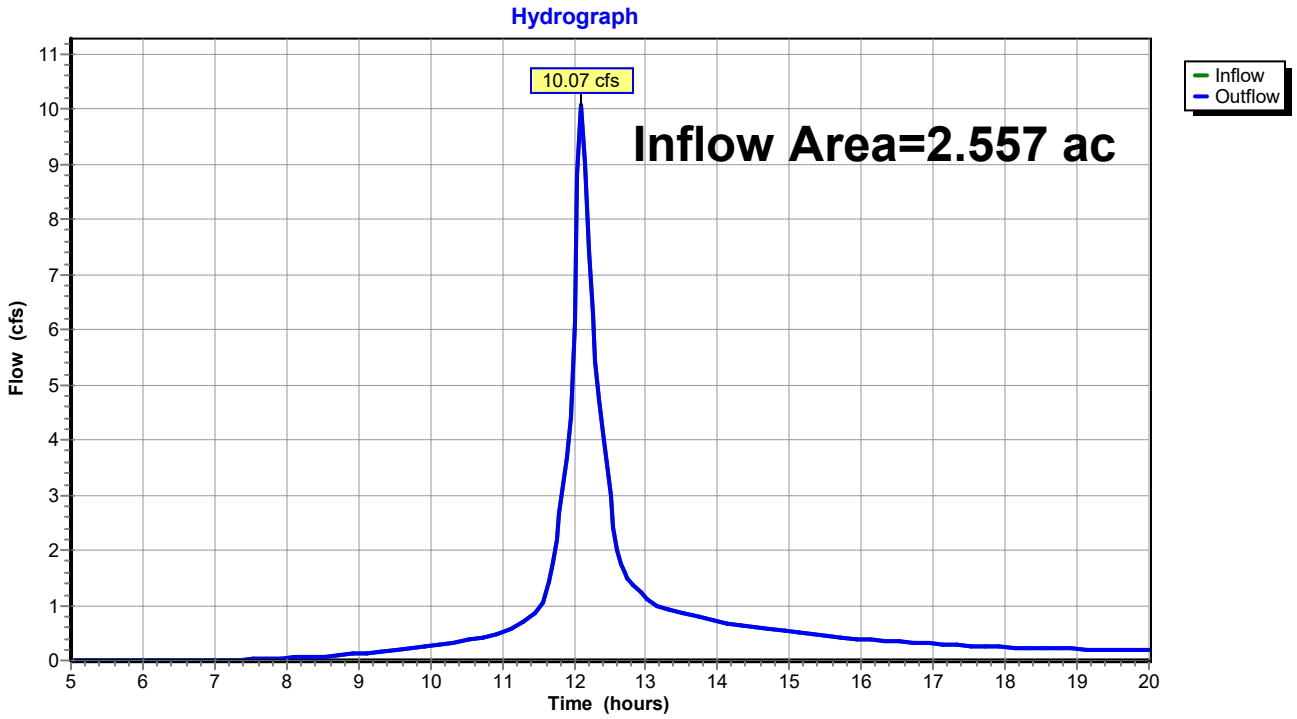

Time span=5.00-20.00 hrs, dt=0.05 hrs, 301 points
Runoff by SCS TR-20 method, UH=SCS, Weighted-CN
Reach routing by Stor-Ind+Trans method - Pond routing by Stor-Ind method

Subcatchment 1S: Pre Subcatchment 1 Runoff Area=20,023 sf 0.00% Impervious Runoff Depth>5.57"
Flow Length=138' Tc=4.0 min CN=77 Runoff=3.31 cfs 0.213 af

Subcatchment 2S: Pre Subcatchment 2 Runoff Area=27,744 sf 0.00% Impervious Runoff Depth>5.56"
Flow Length=198' Tc=12.7 min CN=77 Runoff=3.50 cfs 0.295 af

Subcatchment 3S: Pre Subcatchment 3 Runoff Area=63,622 sf 1.18% Impervious Runoff Depth>5.92"
Flow Length=445' Tc=7.0 min CN=80 Runoff=10.05 cfs 0.721 af

Reach DP1: Shoreline 1 Inflow=3.31 cfs 0.213 af
Outflow=3.31 cfs 0.213 af

Reach DP2: Shoreline 2 Inflow=3.50 cfs 0.295 af
Outflow=3.50 cfs 0.295 af

Reach DP3: Shoreline 3 Inflow=10.05 cfs 0.721 af
Outflow=10.05 cfs 0.721 af

Reach SP1: SACO RIVER / OCEAN Inflow=15.89 cfs 1.229 af
Outflow=15.89 cfs 1.229 af

Total Runoff Area = 2.557 ac Runoff Volume = 1.229 af Average Runoff Depth = 5.77"
99.33% Pervious = 2.540 ac 0.67% Impervious = 0.017 ac

Summary for Subcatchment 1S: Pre Subcatchment 1

Runoff = 3.31 cfs @ 12.06 hrs, Volume= 0.213 af, Depth> 5.57"
Routed to Reach DP1 : Shoreline 1

Runoff by SCS TR-20 method, UH=SCS, Weighted-CN, Time Span= 5.00-20.00 hrs, dt= 0.05 hrs
Type III 24-hr 100-yr Rainfall=8.70"

Area (sf)	CN	Description
20,023	77	Woods, Good, HSG D
20,023		100.00% Pervious Area

Tc (min)	Length (feet)	Slope (ft/ft)	Velocity (ft/sec)	Capacity (cfs)	Description
3.1	20	0.1000	0.11		**Sheet Flow, Tc-1** Woods: Light underbrush n= 0.400 P2= 3.30"
0.9	118	0.1780	2.11		**Shallow Concentrated Flow, Tc-2** Woodland Kv= 5.0 fps
4.0	138	Total			

Subcatchment 1S: Pre Subcatchment 1

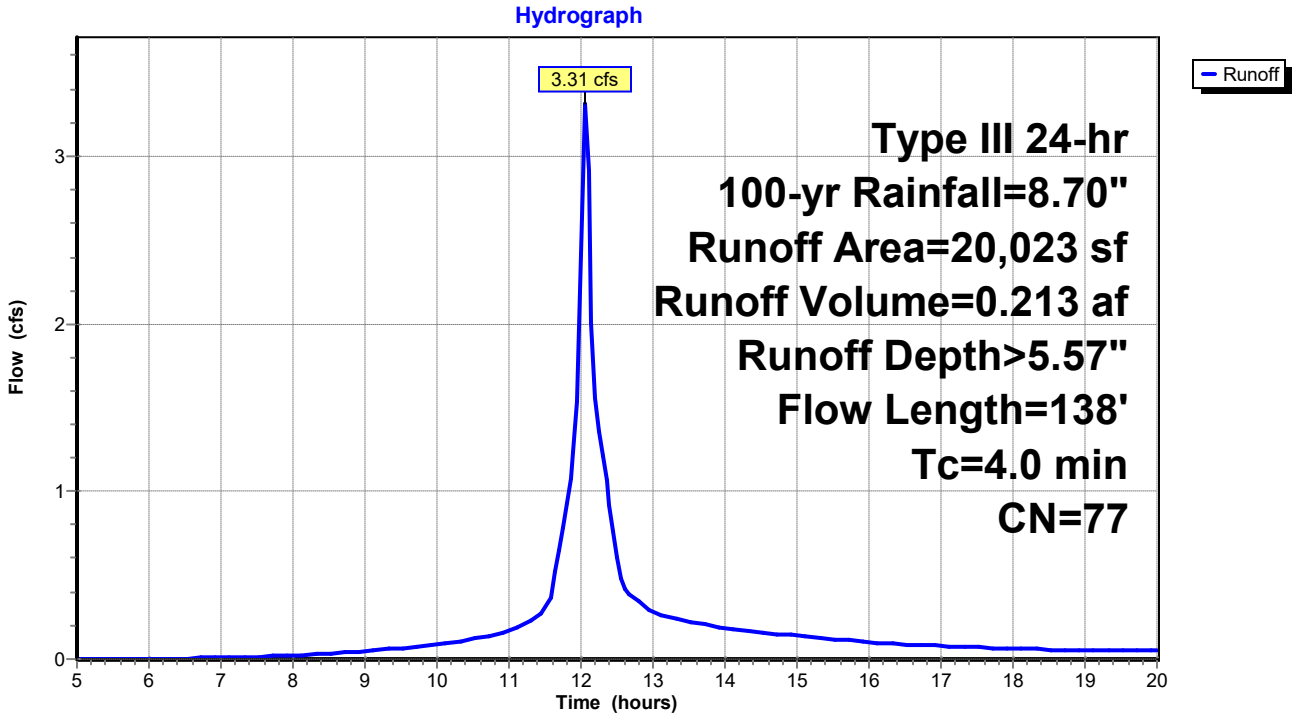

Summary for Subcatchment 2S: Pre Subcatchment 2

Runoff = 3.50 cfs @ 12.17 hrs, Volume= 0.295 af, Depth> 5.56"
Routed to Reach DP2 : Shoreline 2

Runoff by SCS TR-20 method, UH=SCS, Weighted-CN, Time Span= 5.00-20.00 hrs, dt= 0.05 hrs
Type III 24-hr 100-yr Rainfall=8.70"

Area (sf)	CN	Description
27,744	77	Woods, Good, HSG D
27,744		100.00% Pervious Area

Tc (min)	Length (feet)	Slope (ft/ft)	Velocity (ft/sec)	Capacity (cfs)	Description
12.3	148	0.1689	0.20		**Sheet Flow, Tc-1** Woods: Light underbrush n= 0.400 P2= 3.30"
0.4	50	0.1800	2.12		**Shallow Concentrated Flow, Tc-2** Woodland Kv= 5.0 fps
12.7	198	Total			

Subcatchment 2S: Pre Subcatchment 2

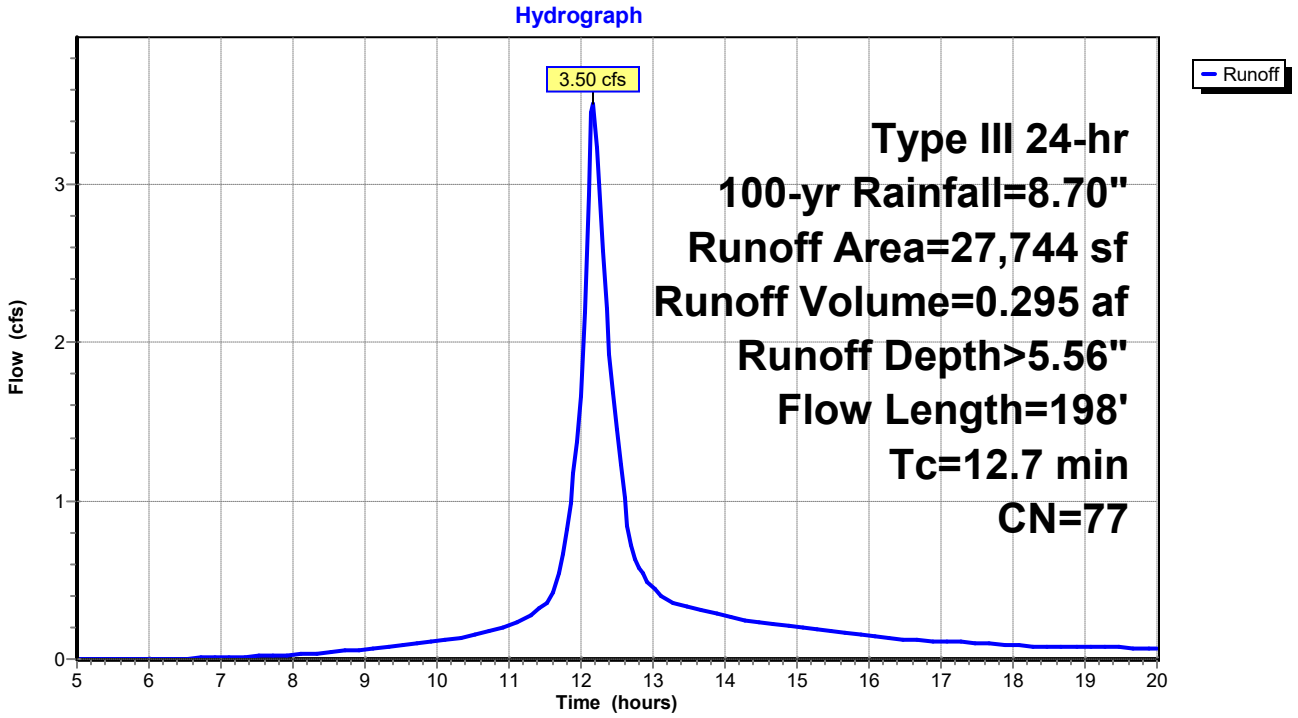

Summary for Subcatchment 3S: Pre Subcatchment 3

Runoff = 10.05 cfs @ 12.10 hrs, Volume= 0.721 af, Depth> 5.92"
Routed to Reach DP3 : Shoreline 3

Runoff by SCS TR-20 method, UH=SCS, Weighted-CN, Time Span= 5.00-20.00 hrs, dt= 0.05 hrs
Type III 24-hr 100-yr Rainfall=8.70"

	Area (sf)	CN	Description
	51,121	77	Woods, Good, HSG D
	751	98	Roofs, HSG D
	4,795	96	Gravel surface, HSG D
*	6,955	88	Sand Beach, HSG D
	63,622	80	Weighted Average
	62,871		98.82% Pervious Area
	751		1.18% Impervious Area

Tc (min)	Length (feet)	Slope (ft/ft)	Velocity (ft/sec)	Capacity (cfs)	Description
2.7	23	0.1740	0.14		**Sheet Flow, Tc-1** Woods: Light underbrush n= 0.400 P2= 3.30"
1.0	70	0.0571	1.19		**Shallow Concentrated Flow, Tc-2** Woodland Kv= 5.0 fps
0.5	170	0.1059	5.24		**Shallow Concentrated Flow, Tc-3** Unpaved Kv= 16.1 fps
2.5	140	0.0357	0.94		**Shallow Concentrated Flow, Tc-4** Woodland Kv= 5.0 fps
0.3	42	0.0714	2.67		**Shallow Concentrated Flow, Tc-4** Nearly Bare & Untilled Kv= 10.0 fps
7.0	445	Total			

Subcatchment 3S: Pre Subcatchment 3

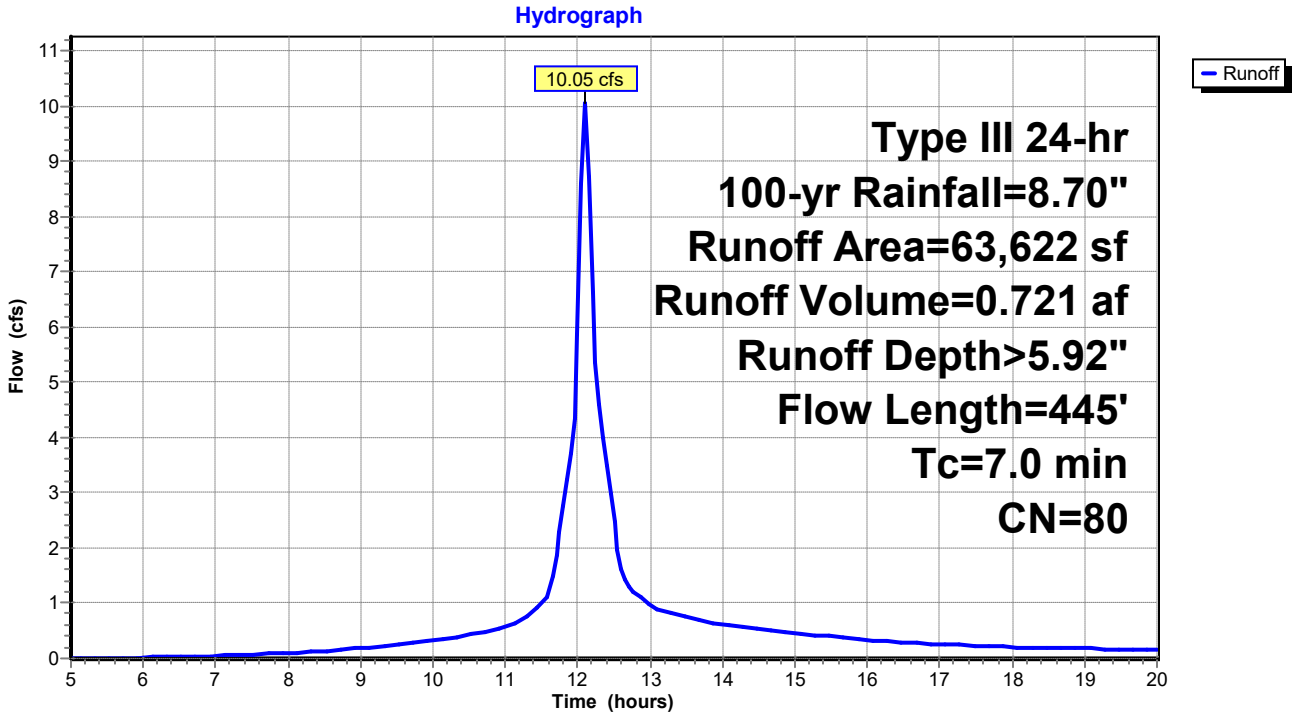

Summary for Reach DP1: Shoreline 1

Inflow Area = 0.460 ac, 0.00% Impervious, Inflow Depth > 5.57" for 100-yr event
Inflow = 3.31 cfs @ 12.06 hrs, Volume= 0.213 af
Outflow = 3.31 cfs @ 12.06 hrs, Volume= 0.213 af, Atten= 0%, Lag= 0.0 min
Routed to Reach SP1 : SACO RIVER / OCEAN

Routing by Stor-Ind+Trans method, Time Span= 5.00-20.00 hrs, dt= 0.05 hrs

Reach DP1: Shoreline 1

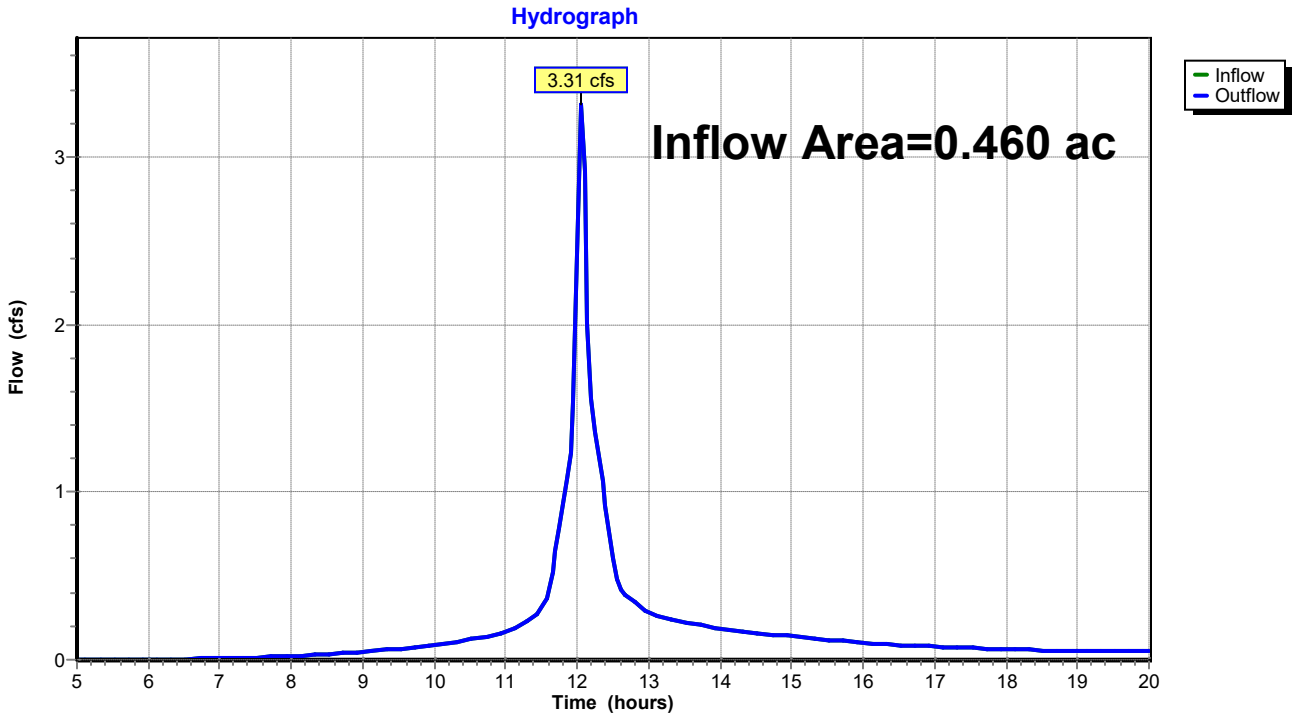

Summary for Reach DP2: Shoreline 2

Inflow Area = 0.637 ac, 0.00% Impervious, Inflow Depth > 5.56" for 100-yr event
Inflow = 3.50 cfs @ 12.17 hrs, Volume= 0.295 af
Outflow = 3.50 cfs @ 12.17 hrs, Volume= 0.295 af, Atten= 0%, Lag= 0.0 min
Routed to Reach SP1 : SACO RIVER / OCEAN

Routing by Stor-Ind+Trans method, Time Span= 5.00-20.00 hrs, dt= 0.05 hrs

Reach DP2: Shoreline 2

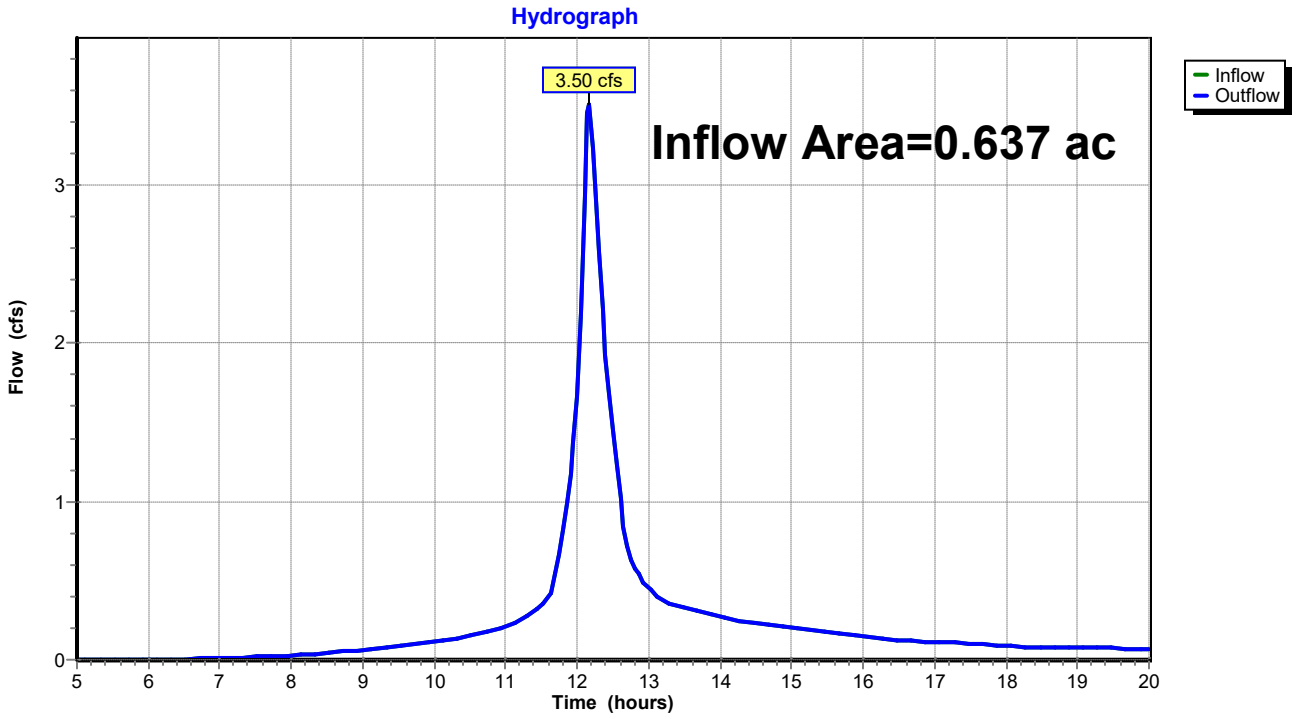

Summary for Reach DP3: Shoreline 3

Inflow Area = 1.461 ac, 1.18% Impervious, Inflow Depth > 5.92" for 100-yr event
Inflow = 10.05 cfs @ 12.10 hrs, Volume= 0.721 af
Outflow = 10.05 cfs @ 12.10 hrs, Volume= 0.721 af, Atten= 0%, Lag= 0.0 min
Routed to Reach SP1 : SACO RIVER / OCEAN

Routing by Stor-Ind+Trans method, Time Span= 5.00-20.00 hrs, dt= 0.05 hrs

Reach DP3: Shoreline 3

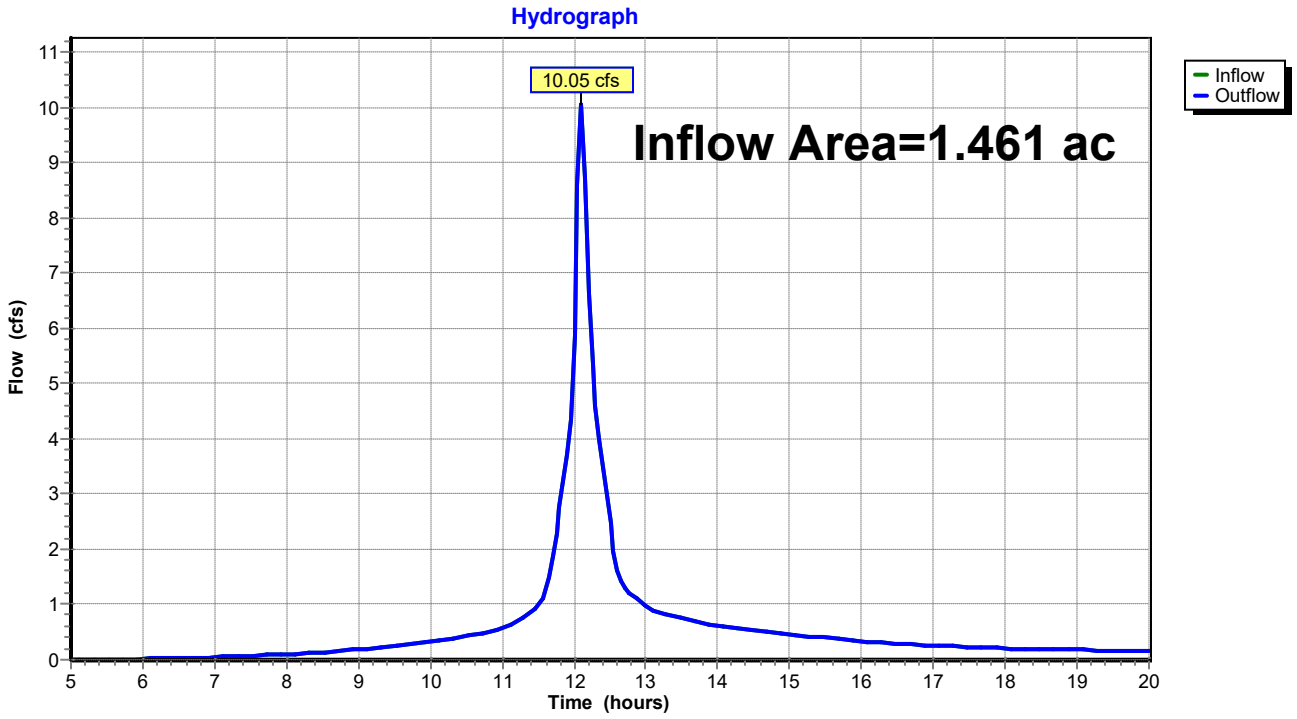

Summary for Reach SP1: SACO RIVER / OCEAN

Inflow Area = 2.557 ac, 0.67% Impervious, Inflow Depth > 5.77" for 100-yr event
Inflow = 15.89 cfs @ 12.10 hrs, Volume= 1.229 af
Outflow = 15.89 cfs @ 12.10 hrs, Volume= 1.229 af, Atten= 0%, Lag= 0.0 min

Routing by Stor-Ind+Trans method, Time Span= 5.00-20.00 hrs, dt= 0.05 hrs

Reach SP1: SACO RIVER / OCEAN

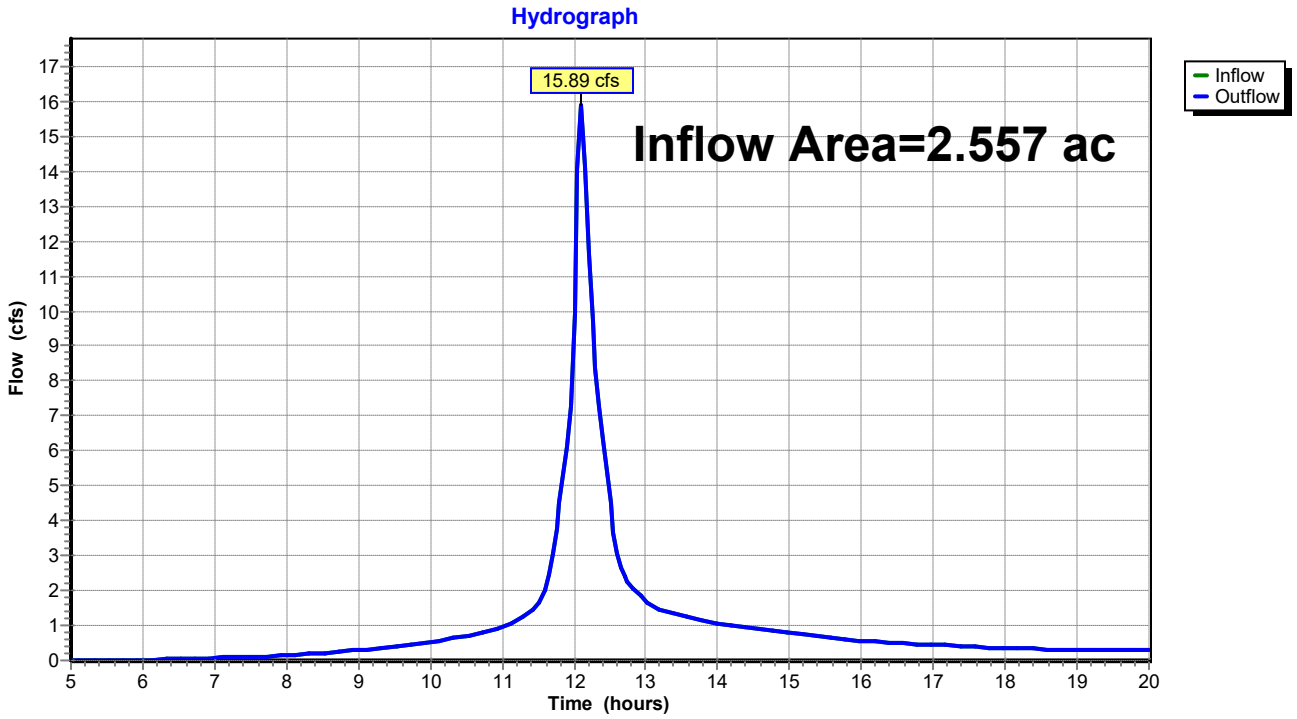

TABLE OF CONTENTS

Project Reports
1 Routing Diagram
2 Project Notes
3 Rainfall Events Listing
4 Area Listing (all nodes)
5 Soil Listing (all nodes)
6 Ground Covers (all nodes)

2-yr Event
7 Node Listing
8 Subcat 1S: Pre Subcatchment 1
9 Subcat 2S: Pre Subcatchment 2
10 Subcat 3S: Pre Subcatchment 3
12 Reach DP1: Shoreline 1
13 Reach DP2: Shoreline 2
14 Reach DP3: Shoreline 3
15 Reach SP1: SACO RIVER / OCEAN

10-yr Event
16 Node Listing
17 Subcat 1S: Pre Subcatchment 1
18 Subcat 2S: Pre Subcatchment 2
19 Subcat 3S: Pre Subcatchment 3
21 Reach DP1: Shoreline 1
22 Reach DP2: Shoreline 2
23 Reach DP3: Shoreline 3
24 Reach SP1: SACO RIVER / OCEAN

25-yr Event
25 Node Listing
26 Subcat 1S: Pre Subcatchment 1
27 Subcat 2S: Pre Subcatchment 2
28 Subcat 3S: Pre Subcatchment 3
30 Reach DP1: Shoreline 1
31 Reach DP2: Shoreline 2
32 Reach DP3: Shoreline 3
33 Reach SP1: SACO RIVER / OCEAN

100-yr Event
34 Node Listing
35 Subcat 1S: Pre Subcatchment 1
36 Subcat 2S: Pre Subcatchment 2
37 Subcat 3S: Pre Subcatchment 3
39 Reach DP1: Shoreline 1
40 Reach DP2: Shoreline 2
41 Reach DP3: Shoreline 3

42 Reach SP1: SACO RIVER / OCEAN

Appendix C

Post Development HydroCAD Calculations

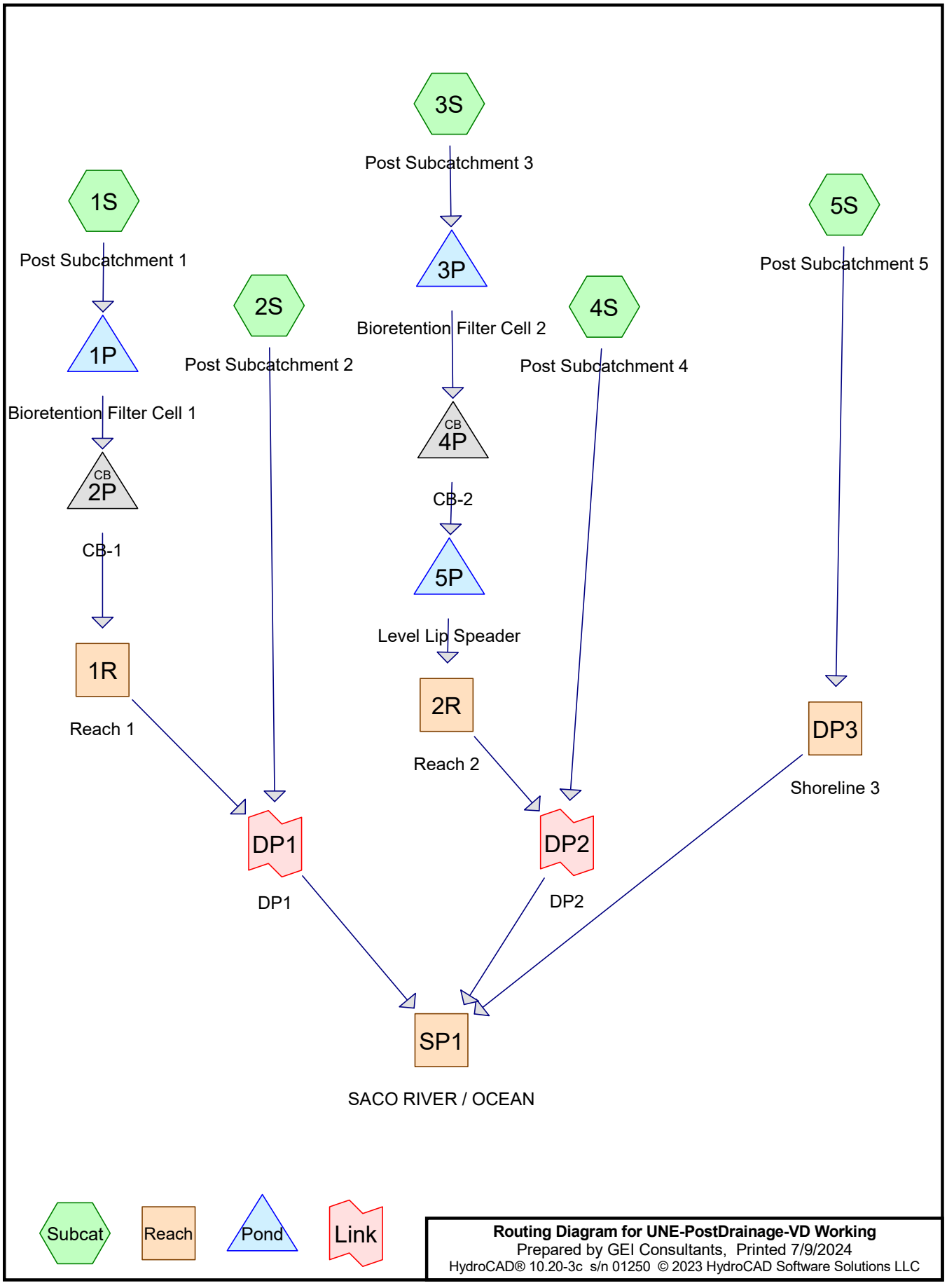
3S
Post Subcatchment 3
1S
Post Subcatchment 1
5S
Post Subcatchment 5
3P
2S
4S
1P
Post Subcatchment 2
Bioretention Filter Cell 2
Post Subcatchment 4
Bioretention Filter Cell 1
CB
4P
CB
2P
CB-2
CB-1
5P
Level Lip Spreader
1R
2R
DP3
Reach 1
Reach 2
Shoreline 3
DP1
DP2
DP1
DP2
SP1
SACO RIVER / OCEAN
Subcat
Reach
Pond
Link
Routing Diagram for UNE-PostDrainage-VD Working
Prepared by GEI Consultants, Printed 7/9/2024
HydroCAD® 10.20-3c s/n 01250 © 2023 HydroCAD Software Solutions LLC

Project Notes

Defined 3 rainfall events from ME-York IDF

Rainfall Events Listing

Event#	Event Name	Storm Type	Curve	Mode	Duration (hours)	B/B	Depth (inches)	AMC
1	2-yr	Type III 24-hr		Default	24.00	1	3.30	2
2	10-yr	Type III 24-hr		Default	24.00	1	4.90	2
3	25-yr	Type III 24-hr		Default	24.00	1	6.20	2
4	100-yr	Type III 24-hr		Default	24.00	1	8.70	2
5	WQ	Type III 24-hr		Default	24.00	1	1.00	2

Area Listing (all nodes)

Area (acres)	CN	Description (subcatchment-numbers)
0.081	80	>75% Grass cover, Good, HSG D (1S, 3S, 4S)
0.013	73	Biofiltration cell, Good, HSG D (3S)
0.020	73	Bioretention Filter Cell, Good, HSG D (1S)
0.089	96	Gravel surface, HSG D (5S)
0.039	98	Ledge, HSG D (1S, 3S)
0.090	98	Paved Access Drive, HSG D (1S)
0.038	98	Paved acccess drive, HSG D (5S)
0.093	98	Paved access drive, HSG D (3S, 4S)
0.028	98	Paved parking, HSG D (2S)
0.017	98	Roofs, HSG D (5S)
0.160	88	Sand beach, HSG D (5S)
0.362	79	Woods, Fair, HSG D (4S)
1.526	77	Woods, Good, HSG D (1S, 2S, 3S, 5S)
2.557	**81**	**TOTAL AREA**

Soil Listing (all nodes)

Area (acres)	Soil Group	Subcatchment Numbers
0.000	HSG A	
0.000	HSG B	
0.000	HSG C	
2.557	HSG D	1S, 2S, 3S, 4S, 5S
0.000	Other	
2.557		**TOTAL AREA**

Ground Covers (all nodes)

HSG-A (acres)	HSG-B (acres)	HSG-C (acres)	HSG-D (acres)	Other (acres)	Total (acres)	Ground Cover	Subcatchment Numbers
0.000	0.000	0.000	0.081	0.000	0.081	>75% Grass cover, Good	1S, 3S, 4S
0.000	0.000	0.000	0.013	0.000	0.013	Biofiltration cell, Good	3S
0.000	0.000	0.000	0.020	0.000	0.020	Bioretention Filter Cell, Good	1S
0.000	0.000	0.000	0.089	0.000	0.089	Gravel surface	5S
0.000	0.000	0.000	0.039	0.000	0.039	Ledge	1S, 3S
0.000	0.000	0.000	0.090	0.000	0.090	Paved Access Drive	1S
0.000	0.000	0.000	0.038	0.000	0.038	Paved acccess drive	5S
0.000	0.000	0.000	0.093	0.000	0.093	Paved access drive	3S, 4S
0.000	0.000	0.000	0.028	0.000	0.028	Paved parking	2S
0.000	0.000	0.000	0.017	0.000	0.017	Roofs	5S
0.000	0.000	0.000	0.160	0.000	0.160	Sand beach	5S
0.000	0.000	0.000	0.362	0.000	0.362	Woods, Fair	4S
0.000	0.000	0.000	1.526	0.000	1.526	Woods, Good	1S, 2S, 3S, 5S
0.000	**0.000**	**0.000**	**2.557**	**0.000**	**2.557**	**TOTAL AREA**	

Pipe Listing (all nodes)

Line#	Node Number	In-Invert (feet)	Out-Invert (feet)	Length (feet)	Slope (ft/ft)	n	Width (inches)	Diam/Height (inches)	Inside-Fill (inches)	Node Name
1	2P	13.75	12.00	48.0	0.0365	0.013	0.0	15.0	0.0	
2	4P	18.75	18.00	40.0	0.0187	0.013	0.0	18.0	0.0	

Time span=5.00-20.00 hrs, dt=0.05 hrs, 301 points
Runoff by SCS TR-20 method, UH=SCS, Weighted-CN
Reach routing by Stor-Ind method - Pond routing by Stor-Ind method

Subcatchment 1S: Post Subcatchment 1 Runoff Area=9,832 sf 50.01% Impervious Runoff Depth>1.88"
Flow Length=172' Tc=0.8 min CN=87 Runoff=0.59 cfs 0.035 af

Subcatchment 2S: Post Subcatchment 2 Runoff Area=11,488 sf 10.78% Impervious Runoff Depth>1.30"
Flow Length=133' Tc=3.4 min CN=79 Runoff=0.46 cfs 0.029 af

Subcatchment 3S: Post Subcatchment 3 Runoff Area=13,365 sf 33.49% Impervious Runoff Depth>1.65"
Flow Length=262' Tc=4.9 min CN=84 Runoff=0.64 cfs 0.042 af

Subcatchment 4S: Post Subcatchment 4 Runoff Area=17,529 sf 1.68% Impervious Runoff Depth>1.30"
Flow Length=126' Tc=7.2 min CN=79 Runoff=0.62 cfs 0.044 af

Subcatchment 5S: Post Subcatchment 5 Runoff Area=59,179 sf 4.06% Impervious Runoff Depth>1.37"
Flow Length=445' Tc=7.0 min CN=80 Runoff=2.23 cfs 0.155 af

Reach 1R: Reach 1 Inflow=0.58 cfs 0.034 af
Outflow=0.58 cfs 0.034 af

Reach 2R: Reach 2 Inflow=0.61 cfs 0.038 af
Outflow=0.61 cfs 0.038 af

Reach DP3: Shoreline 3 Inflow=2.23 cfs 0.155 af
Outflow=2.23 cfs 0.155 af

Reach SP1: SACO RIVER / OCEAN Inflow=4.22 cfs 0.300 af
Outflow=4.22 cfs 0.300 af

Pond 1P: Bioretention Filter Cell 1 Peak Elev=18.11' Storage=79 cf Inflow=0.59 cfs 0.035 af
Outflow=0.58 cfs 0.034 af

Pond 2P: CB-1 Peak Elev=14.15' Inflow=0.58 cfs 0.034 af
15.0" Round Culvert n=0.013 L=48.0' S=0.0365 '/' Outflow=0.58 cfs 0.034 af

Pond 3P: Bioretention Filter Cell 2 Peak Elev=23.62' Storage=64 cf Inflow=0.64 cfs 0.042 af
Outflow=0.64 cfs 0.041 af

Pond 4P: CB-2 Peak Elev=19.15' Inflow=0.64 cfs 0.041 af
18.0" Round Culvert n=0.013 L=40.0' S=0.0187 '/' Outflow=0.64 cfs 0.041 af

Pond 5P: Level Lip Speader Peak Elev=18.00' Storage=115 cf Inflow=0.64 cfs 0.041 af
Outflow=0.61 cfs 0.038 af

Link DP1: DP1 Inflow=1.02 cfs 0.063 af
Primary=1.02 cfs 0.063 af

Link DP2: DP2 Inflow=1.24 cfs 0.082 af
Primary=1.24 cfs 0.082 af

Total Runoff Area = 2.557 ac Runoff Volume = 0.305 af Average Runoff Depth = 1.43"
88.04% Pervious = 2.251 ac 11.96% Impervious = 0.306 ac

Summary for Subcatchment 1S: Post Subcatchment 1

Runoff = 0.59 cfs @ 12.01 hrs, Volume= 0.035 af, Depth> 1.88"
Routed to Pond 1P : Bioretention Filter Cell 1

Runoff by SCS TR-20 method, UH=SCS, Weighted-CN, Time Span= 5.00-20.00 hrs, dt= 0.05 hrs
Type III 24-hr 2-yr Rainfall=3.30"

	Area (sf)	CN	Description
	3,430	77	Woods, Good, HSG D
*	982	98	Ledge, HSG D
	595	80	>75% Grass cover, Good, HSG D
*	3,935	98	Paved Access Drive, HSG D
*	890	73	Bioretention Filter Cell, Good, HSG D
	9,832	87	Weighted Average
	4,915		49.99% Pervious Area
	4,917		50.01% Impervious Area

Tc (min)	Length (feet)	Slope (ft/ft)	Velocity (ft/sec)	Capacity (cfs)	Description
0.4	46	0.0500	1.73		**Sheet Flow, Tc-1** Smooth surfaces n= 0.011 P2= 3.30"
0.3	102	0.0500	5.25	15.74	**Channel Flow, Tc-2** Area= 3.0 sf Perim= 9.2' r= 0.33' n= 0.030 Earth, grassed & winding
0.1	24	0.0625	3.75		**Shallow Concentrated Flow, Tc-3** Grassed Waterway Kv= 15.0 fps
0.8	172	Total			

Subcatchment 1S: Post Subcatchment 1

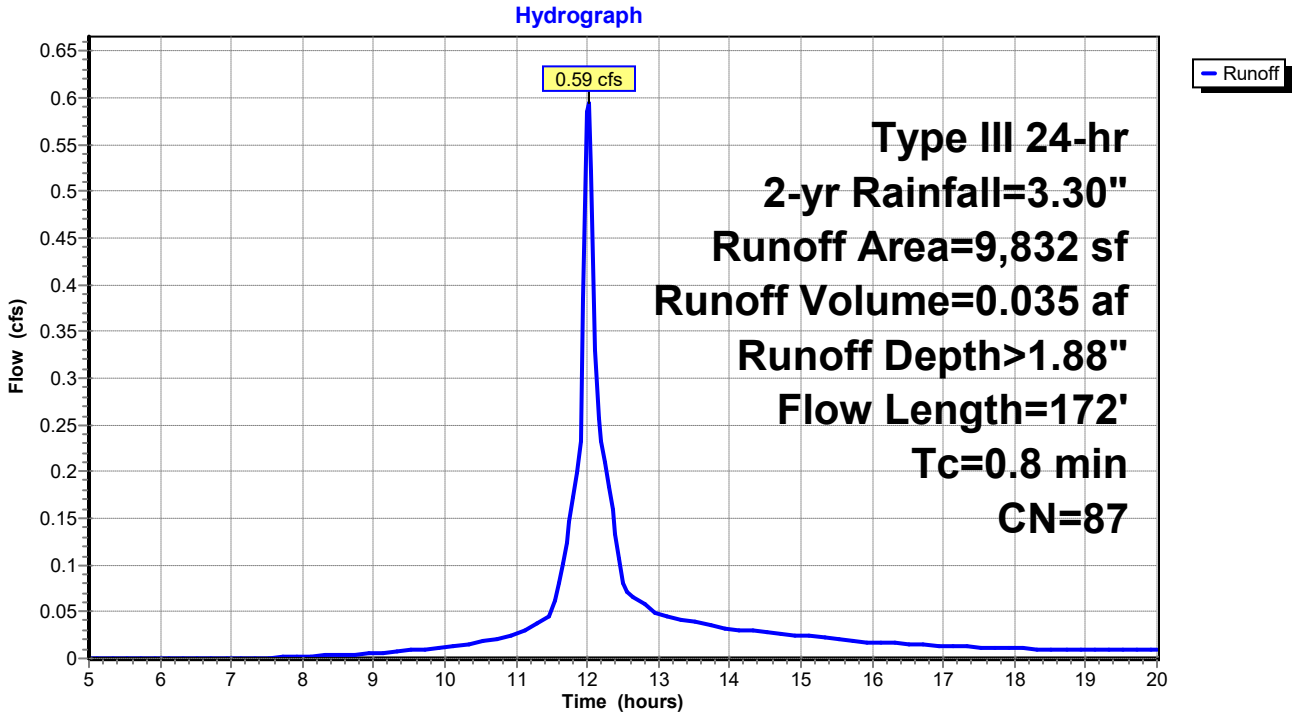

Summary for Subcatchment 2S: Post Subcatchment 2

Runoff = 0.46 cfs @ 12.06 hrs, Volume= 0.029 af, Depth> 1.30"
Routed to Link DP1 : DP1

Runoff by SCS TR-20 method, UH=SCS, Weighted-CN, Time Span= 5.00-20.00 hrs, dt= 0.05 hrs
Type III 24-hr 2-yr Rainfall=3.30"

Area (sf)	CN	Description
10,250	77	Woods, Good, HSG D
1,238	98	Paved parking, HSG D
11,488	79	Weighted Average
10,250		89.22% Pervious Area
1,238		10.78% Impervious Area

Tc (min)	Length (feet)	Slope (ft/ft)	Velocity (ft/sec)	Capacity (cfs)	Description
2.5	21	0.1905	0.14		**Sheet Flow, Tc-1** Woods: Light underbrush n= 0.400 P2= 3.30"
0.9	112	0.1696	2.06		**Shallow Concentrated Flow, Tc-2** Woodland Kv= 5.0 fps
3.4	133	Total			

Subcatchment 2S: Post Subcatchment 2

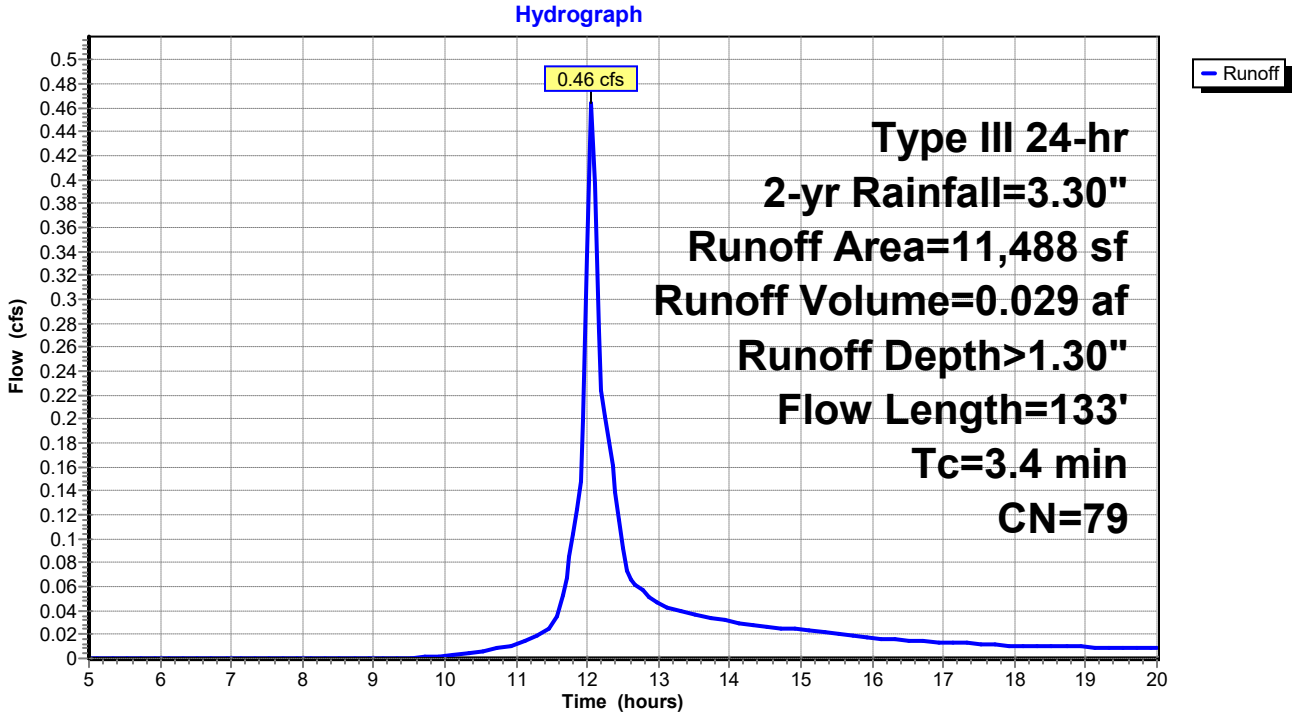

Summary for Subcatchment 3S: Post Subcatchment 3

Runoff = 0.64 cfs @ 12.08 hrs, Volume= 0.042 af, Depth> 1.65"
Routed to Pond 3P : Bioretention Filter Cell 2

Runoff by SCS TR-20 method, UH=SCS, Weighted-CN, Time Span= 5.00-20.00 hrs, dt= 0.05 hrs
Type III 24-hr 2-yr Rainfall=3.30"

	Area (sf)	CN	Description
	6,822	77	Woods, Good, HSG D
*	580	73	Biofiltration cell, Good, HSG D
*	3,768	98	Paved access drive, HSG D
	1,487	80	>75% Grass cover, Good, HSG D
*	708	98	Ledge, HSG D
	13,365	84	Weighted Average
	8,889		66.51% Pervious Area
	4,476		33.49% Impervious Area

Tc (min)	Length (feet)	Slope (ft/ft)	Velocity (ft/sec)	Capacity (cfs)	Description
4.2	43	0.2093	0.17		**Sheet Flow, Tc-1** Woods: Light underbrush n= 0.400 P2= 3.30"
0.7	214	0.0500	5.25	15.74	**Channel Flow, Tc-2** Area= 3.0 sf Perim= 9.2' r= 0.33' n= 0.030 Earth, grassed & winding
0.0	5	0.0500	3.35		**Shallow Concentrated Flow, Tc-3** Grassed Waterway Kv= 15.0 fps
4.9	262	Total			

Subcatchment 3S: Post Subcatchment 3

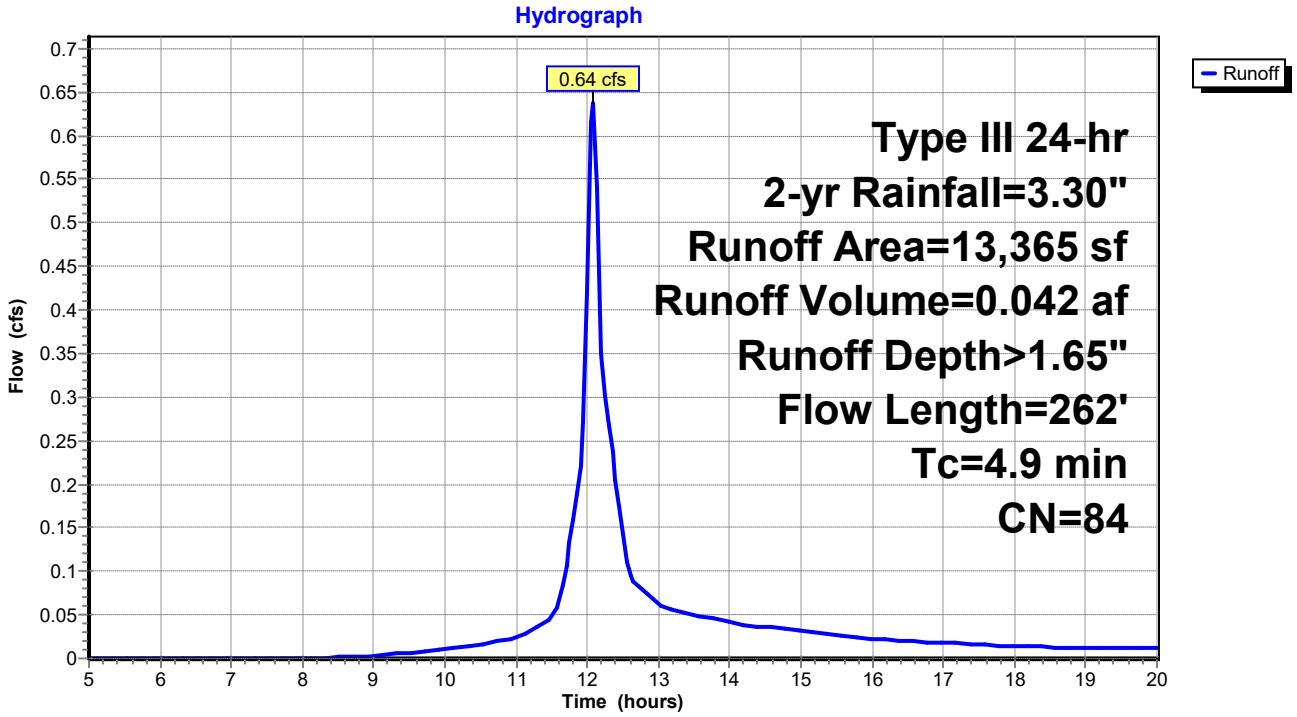

Summary for Subcatchment 4S: Post Subcatchment 4

Runoff = 0.62 cfs @ 12.11 hrs, Volume= 0.044 af, Depth> 1.30"
Routed to Link DP2 : DP2

Runoff by SCS TR-20 method, UH=SCS, Weighted-CN, Time Span= 5.00-20.00 hrs, dt= 0.05 hrs
Type III 24-hr 2-yr Rainfall=3.30"

	Area (sf)	CN	Description
*	295	98	Paved access drive, HSG D
	1,450	80	>75% Grass cover, Good, HSG D
	15,784	79	Woods, Fair, HSG D
	17,529	79	Weighted Average
	17,234		98.32% Pervious Area
	295		1.68% Impervious Area

Tc (min)	Length (feet)	Slope (ft/ft)	Velocity (ft/sec)	Capacity (cfs)	Description
6.8	62	0.1290	0.15		**Sheet Flow, Tc-1** Woods: Light underbrush n= 0.400 P2= 3.30"
0.4	64	0.2343	2.42		**Shallow Concentrated Flow, Tc-2** Woodland Kv= 5.0 fps
7.2	126	Total			

Subcatchment 4S: Post Subcatchment 4

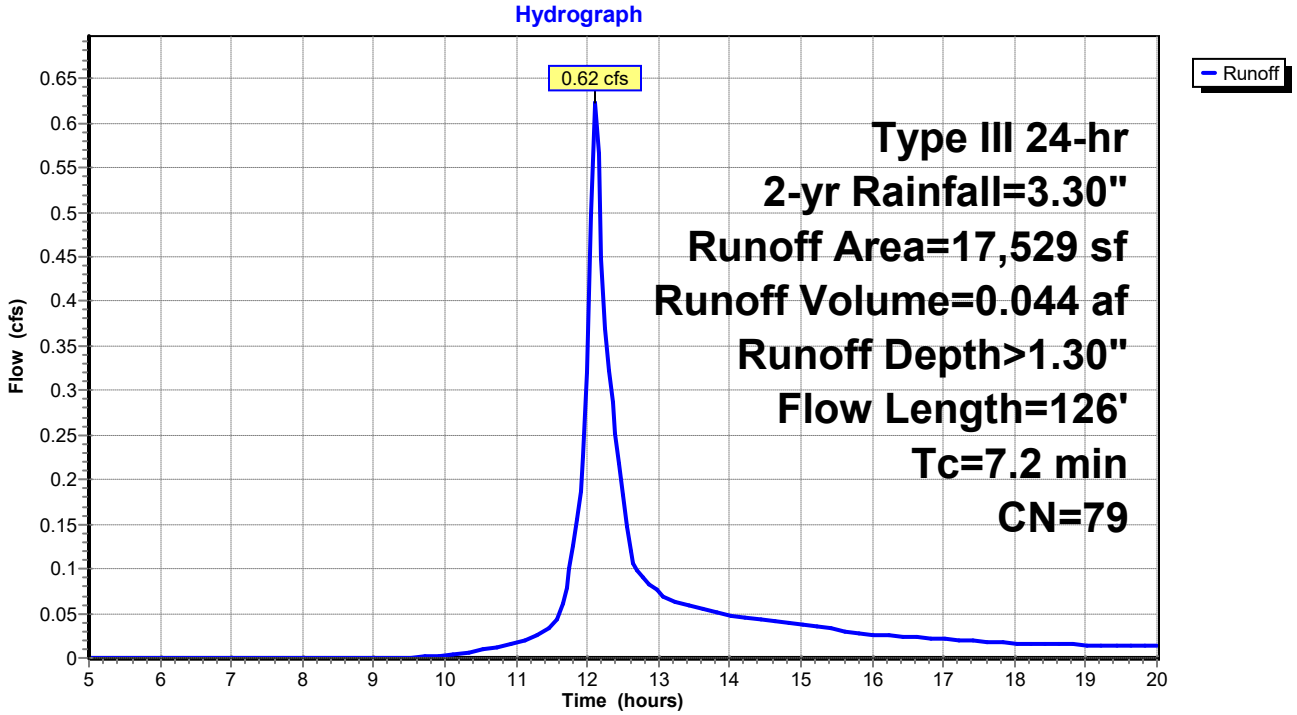

Summary for Subcatchment 5S: Post Subcatchment 5

Runoff = 2.23 cfs @ 12.11 hrs, Volume= 0.155 af, Depth> 1.37"
Routed to Reach DP3 : Shoreline 3

Runoff by SCS TR-20 method, UH=SCS, Weighted-CN, Time Span= 5.00-20.00 hrs, dt= 0.05 hrs
Type III 24-hr 2-yr Rainfall=3.30"

	Area (sf)	CN	Description
*	1,650	98	Paved acccess drive, HSG D
	751	98	Roofs, HSG D
*	6,955	88	Sand beach, HSG D
	3,872	96	Gravel surface, HSG D
	45,951	77	Woods, Good, HSG D
	59,179	80	Weighted Average
	56,778		95.94% Pervious Area
	2,401		4.06% Impervious Area

Tc (min)	Length (feet)	Slope (ft/ft)	Velocity (ft/sec)	Capacity (cfs)	Description
2.7	23	0.1740	0.14		**Sheet Flow, Tc-1** Woods: Light underbrush n= 0.400 P2= 3.30"
1.0	70	0.0574	1.20		**Shallow Concentrated Flow, Tc-2** Woodland Kv= 5.0 fps
0.5	170	0.1059	5.24		**Shallow Concentrated Flow, Tc-3** Unpaved Kv= 16.1 fps
2.5	140	0.0357	0.94		**Shallow Concentrated Flow, Tc-4** Woodland Kv= 5.0 fps
0.3	42	0.0714	2.67		**Shallow Concentrated Flow, Tc-5** Nearly Bare & Untilled Kv= 10.0 fps
7.0	445	Total			

Subcatchment 5S: Post Subcatchment 5

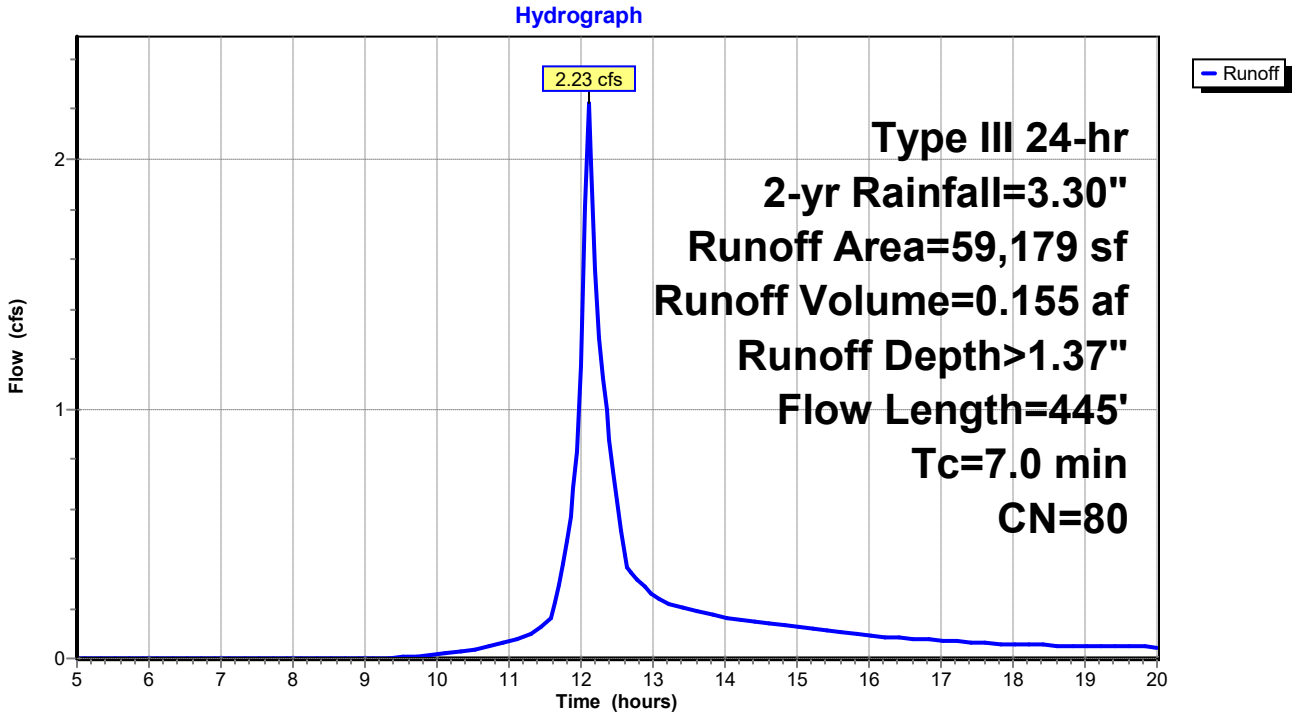

Summary for Reach 1R: Reach 1

Inflow Area = 0.226 ac, 50.01% Impervious, Inflow Depth > 1.81" for 2-yr event
Inflow = 0.58 cfs @ 12.03 hrs, Volume= 0.034 af
Outflow = 0.58 cfs @ 12.03 hrs, Volume= 0.034 af, Atten= 0%, Lag= 0.0 min
Routed to Link DP1 : DP1

Routing by Stor-Ind method, Time Span= 5.00-20.00 hrs, dt= 0.05 hrs

Reach 1R: Reach 1

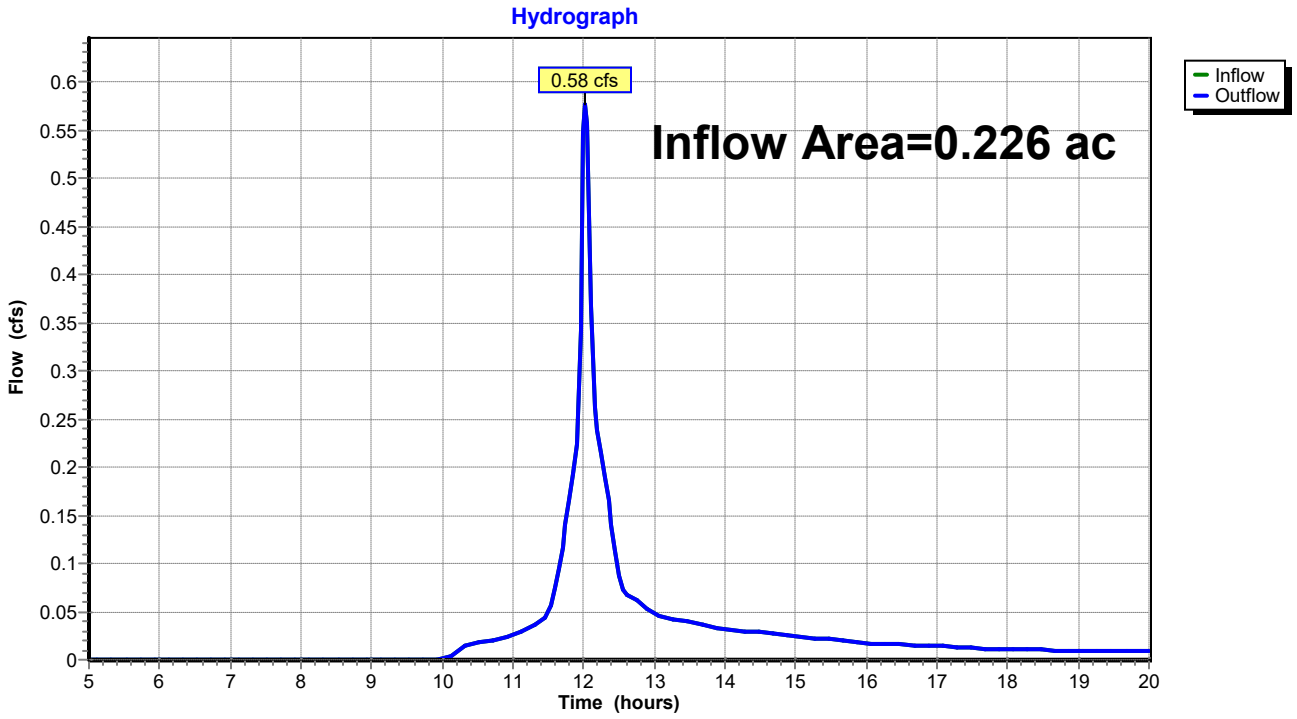

Summary for Reach 2R: Reach 2

Inflow Area = 0.307 ac, 33.49% Impervious, Inflow Depth > 1.50" for 2-yr event
Inflow = 0.61 cfs @ 12.11 hrs, Volume= 0.038 af
Outflow = 0.61 cfs @ 12.11 hrs, Volume= 0.038 af, Atten= 0%, Lag= 0.0 min
Routed to Link DP2 : DP2

Routing by Stor-Ind method, Time Span= 5.00-20.00 hrs, dt= 0.05 hrs

Reach 2R: Reach 2

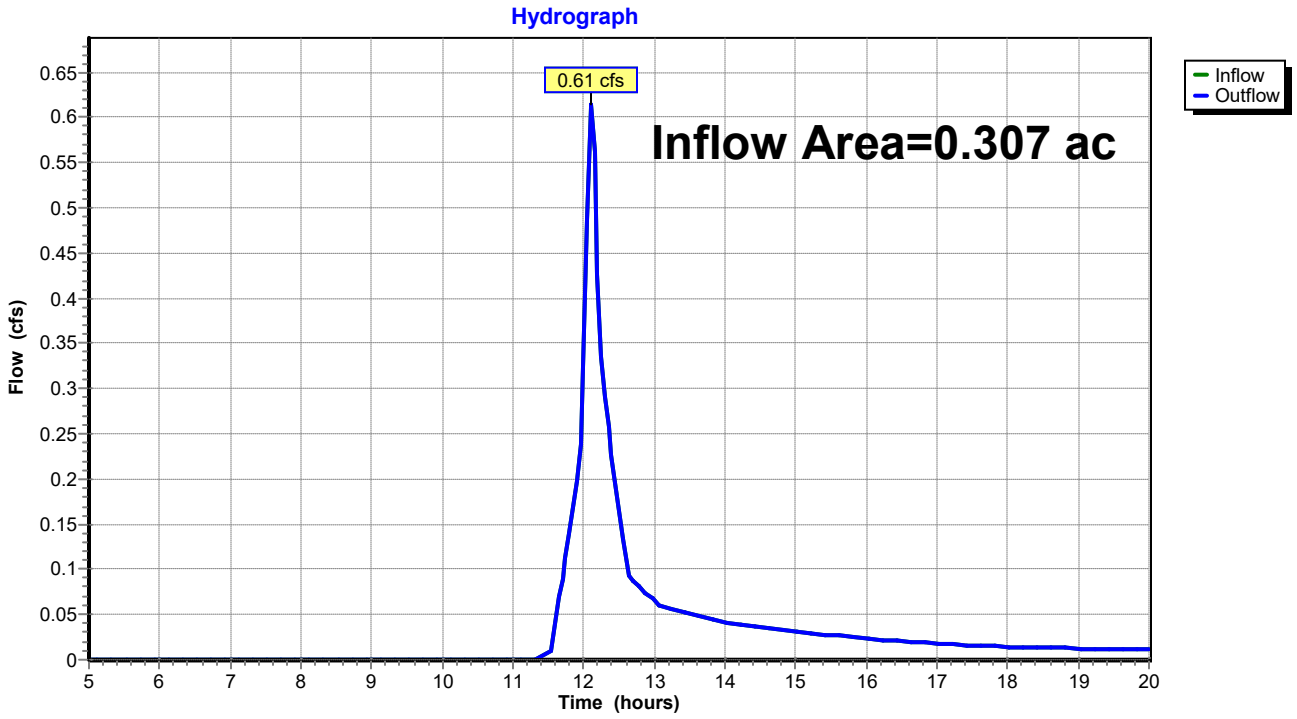

Summary for Reach DP3: Shoreline 3

Inflow Area = 1.359 ac, 4.06% Impervious, Inflow Depth > 1.37" for 2-yr event
Inflow = 2.23 cfs @ 12.11 hrs, Volume= 0.155 af
Outflow = 2.23 cfs @ 12.11 hrs, Volume= 0.155 af, Atten= 0%, Lag= 0.0 min
Routed to Reach SP1 : SACO RIVER / OCEAN

Routing by Stor-Ind method, Time Span= 5.00-20.00 hrs, dt= 0.05 hrs

Reach DP3: Shoreline 3

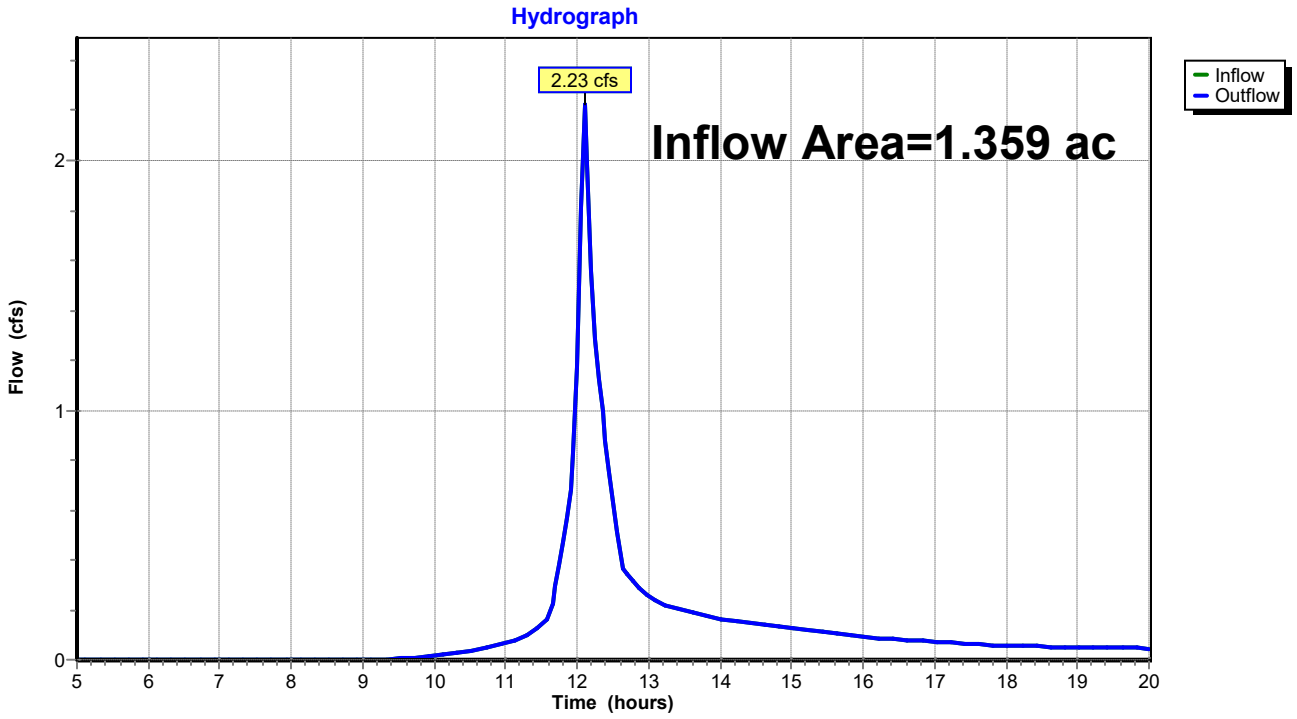

Summary for Reach SP1: SACO RIVER / OCEAN

Inflow Area = 2.557 ac, 11.96% Impervious, Inflow Depth > 1.41" for 2-yr event
Inflow = 4.22 cfs @ 12.10 hrs, Volume= 0.300 af
Outflow = 4.22 cfs @ 12.10 hrs, Volume= 0.300 af, Atten= 0%, Lag= 0.0 min

Routing by Stor-Ind method, Time Span= 5.00-20.00 hrs, dt= 0.05 hrs

Reach SP1: SACO RIVER / OCEAN

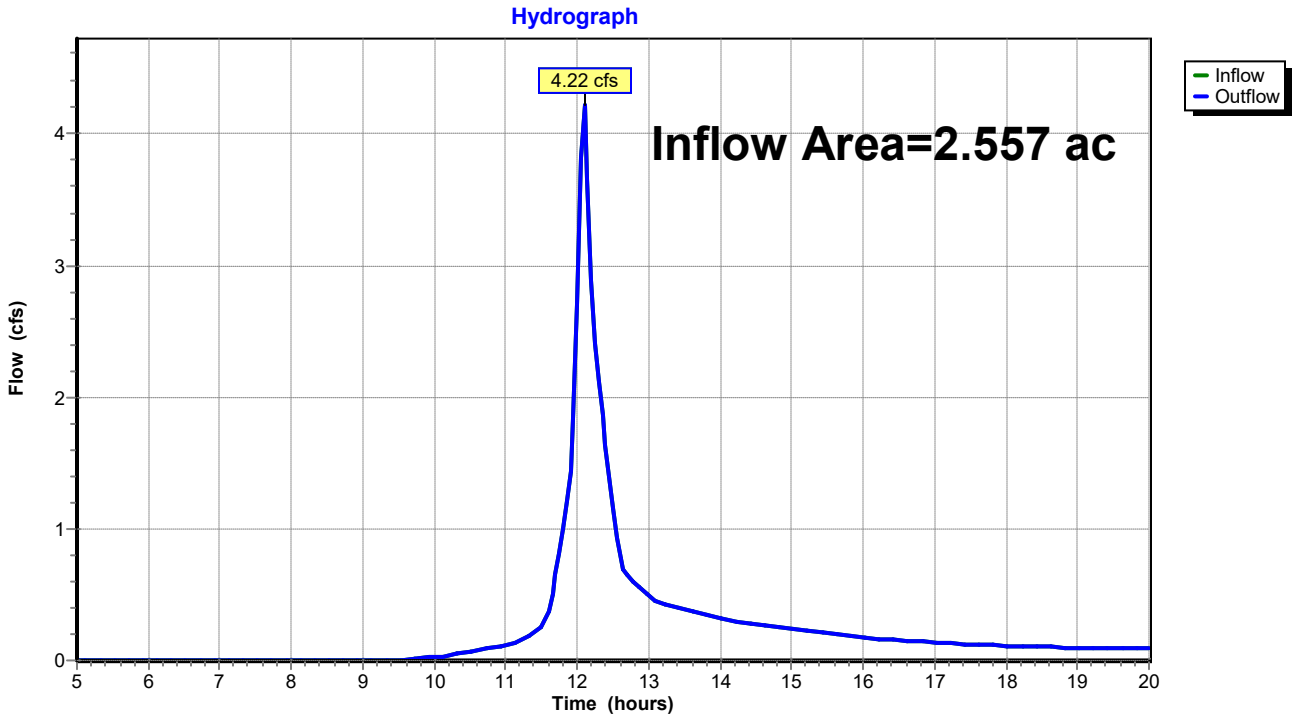

Summary for Pond 1P: Bioretention Filter Cell 1

Inflow Area = 0.226 ac, 50.01% Impervious, Inflow Depth > 1.88" for 2-yr event
Inflow = 0.59 cfs @ 12.01 hrs, Volume= 0.035 af
Outflow = 0.58 cfs @ 12.03 hrs, Volume= 0.034 af, Atten= 3%, Lag= 0.8 min
Primary = 0.58 cfs @ 12.03 hrs, Volume= 0.034 af
Routed to Pond 2P : CB-1

Routing by Stor-Ind method, Time Span= 5.00-20.00 hrs, dt= 0.05 hrs
Peak Elev= 18.11' @ 12.03 hrs Surf.Area= 249 sf Storage= 79 cf

Plug-Flow detention time= 22.5 min calculated for 0.034 af (96% of inflow)
Center-of-Mass det. time= 9.1 min (788.5 - 779.4)

Volume	Invert	Avail.Storage	Storage Description
#1	17.50'	200 cf	**Custom Stage Data (Prismatic)** Listed below (Recalc)

Elevation (feet)	Surf.Area (sq-ft)	Inc.Store (cubic-feet)	Cum.Store (cubic-feet)
17.50	0	0	0
18.00	213	53	53
18.50	372	146	200

Device	Routing	Invert	Outlet Devices
#1	Primary	18.00'	**18.0" Horiz. Orifice/Grate** C= 0.600 in 24.0" Grate (56% open area) Limited to weir flow at low heads

Primary OutFlow Max=0.55 cfs @ 12.03 hrs HW=18.11' (Free Discharge)
↑—**1=Orifice/Grate** (Weir Controls 0.55 cfs @ 1.08 fps)

Pond 1P: Bioretention Filter Cell 1

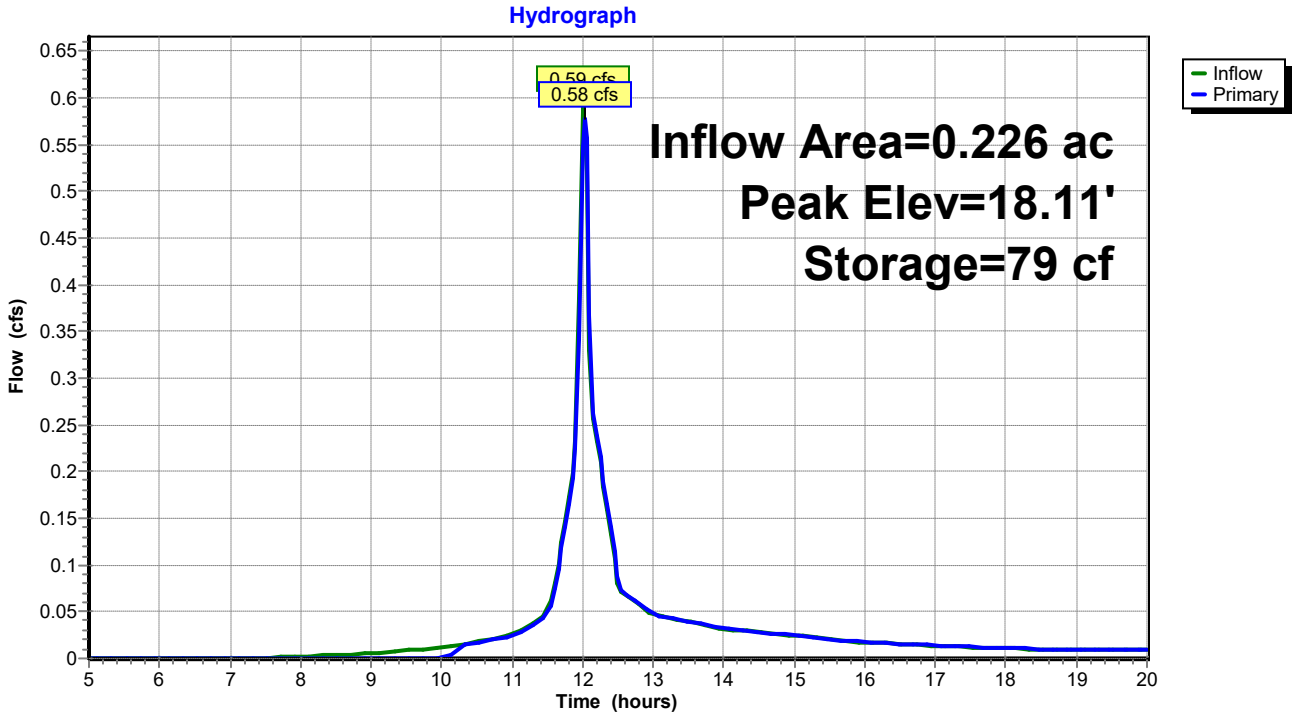

Summary for Pond 2P: CB-1

Inflow Area = 0.226 ac, 50.01% Impervious, Inflow Depth > 1.81" for 2-yr event
Inflow = 0.58 cfs @ 12.03 hrs, Volume= 0.034 af
Outflow = 0.58 cfs @ 12.03 hrs, Volume= 0.034 af, Atten= 0%, Lag= 0.0 min
Primary = 0.58 cfs @ 12.03 hrs, Volume= 0.034 af
Routed to Reach 1R : Reach 1

Routing by Stor-Ind method, Time Span= 5.00-20.00 hrs, dt= 0.05 hrs
Peak Elev= 14.15' @ 12.03 hrs

Device	Routing	Invert	Outlet Devices
#1	Primary	13.75'	**15.0" Round Culvert** L= 48.0' CPP, projecting, no headwall, Ke= 0.900 Inlet / Outlet Invert= 13.75' / 12.00' S= 0.0365 '/' Cc= 0.900 n= 0.013 Corrugated PE, smooth interior, Flow Area= 1.23 sf

Primary OutFlow Max=0.55 cfs @ 12.03 hrs HW=14.14' (Free Discharge)
1=Culvert (Inlet Controls 0.55 cfs @ 1.68 fps)

Pond 2P: CB-1

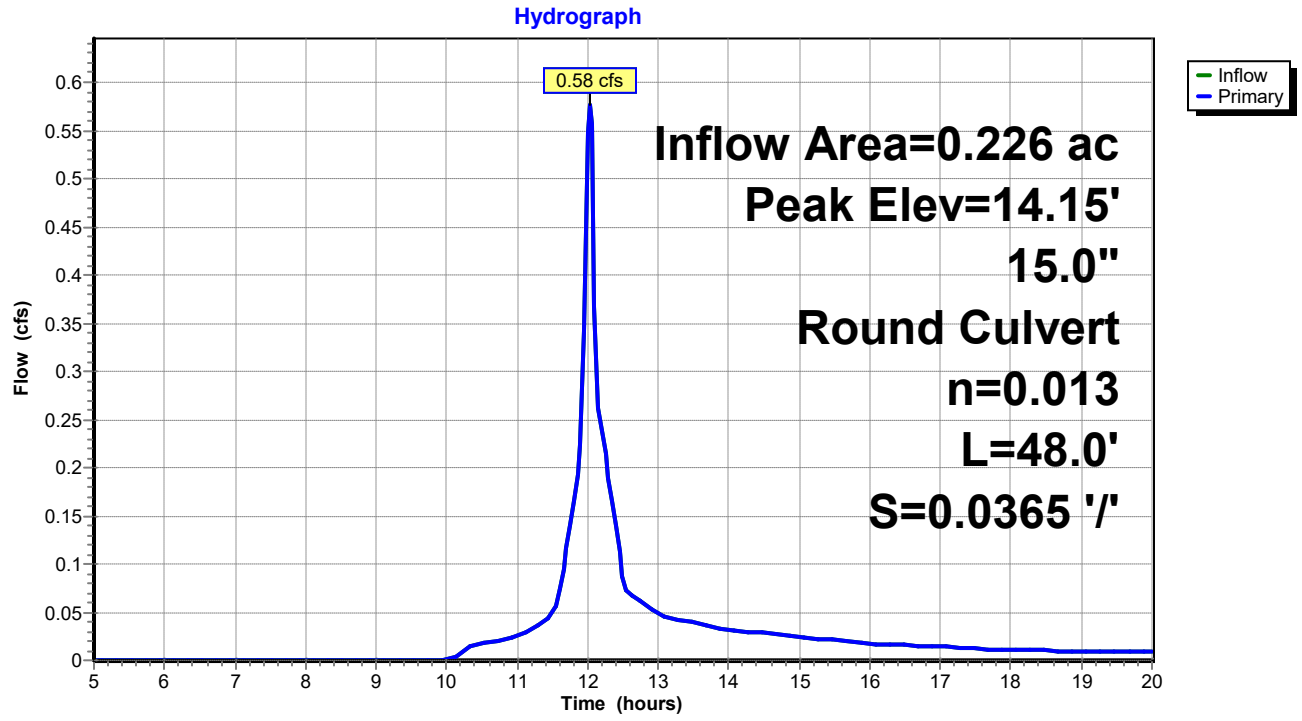

Summary for Pond 3P: Bioretention Filter Cell 2

Inflow Area = 0.307 ac, 33.49% Impervious, Inflow Depth > 1.65" for 2-yr event
Inflow = 0.64 cfs @ 12.08 hrs, Volume= 0.042 af
Outflow = 0.64 cfs @ 12.09 hrs, Volume= 0.041 af, Atten= 0%, Lag= 0.7 min
Primary = 0.64 cfs @ 12.09 hrs, Volume= 0.041 af
Routed to Pond 4P : CB-2

Routing by Stor-Ind method, Time Span= 5.00-20.00 hrs, dt= 0.05 hrs
Peak Elev= 23.62' @ 12.09 hrs Surf.Area= 208 sf Storage= 64 cf

Plug-Flow detention time= 14.5 min calculated for 0.041 af (97% of inflow)
Center-of-Mass det. time= 5.7 min (797.0 - 791.3)

Volume	Invert	Avail.Storage	Storage Description
#1	23.00'	380 cf	**Custom Stage Data (Prismatic)** Listed below (Recalc)

Elevation (feet)	Surf.Area (sq-ft)	Inc.Store (cubic-feet)	Cum.Store (cubic-feet)
23.00	0	0	0
24.00	335	168	168
24.50	515	213	380

Device	Routing	Invert	Outlet Devices
#1	Primary	23.50'	**18.0" Horiz. Orifice/Grate** C= 0.600 in 24.0" Grate (56% open area) Limited to weir flow at low heads

Primary OutFlow Max=0.62 cfs @ 12.09 hrs HW=23.62' (Free Discharge)
↑**1=Orifice/Grate** (Weir Controls 0.62 cfs @ 1.12 fps)

Pond 3P: Bioretention Filter Cell 2

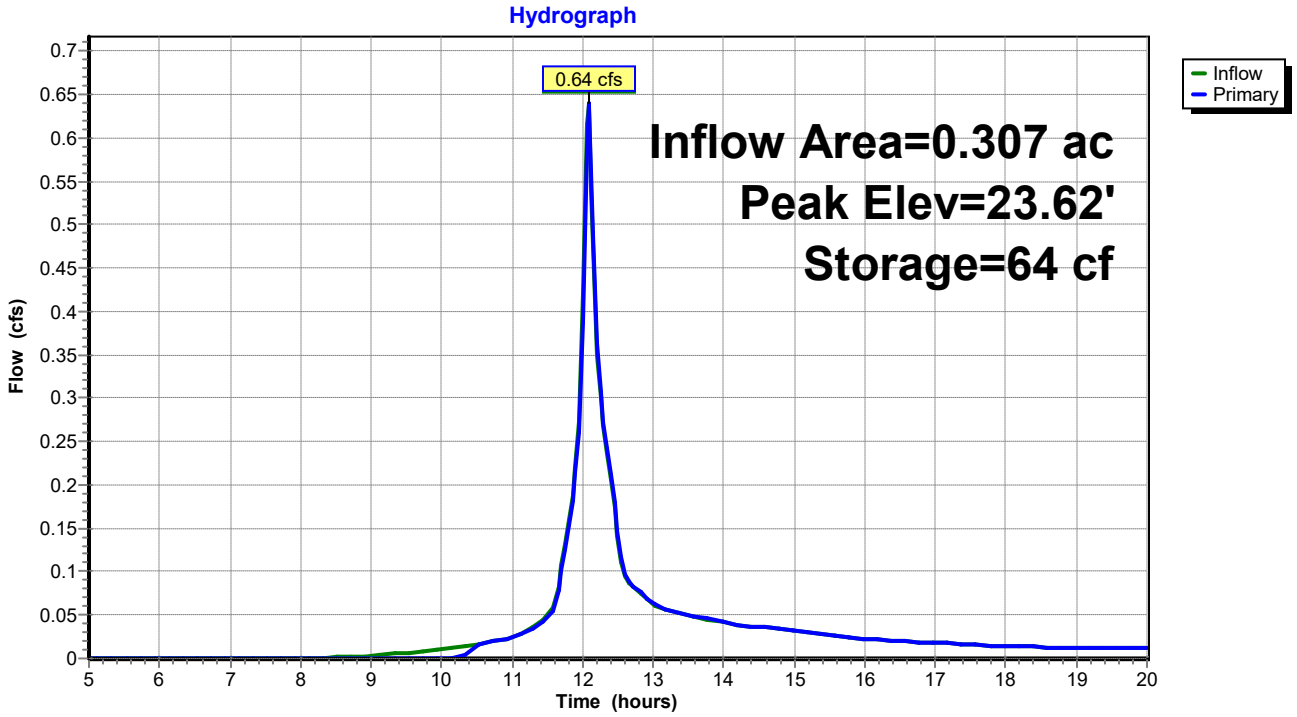

Summary for Pond 4P: CB-2

Inflow Area = 0.307 ac, 33.49% Impervious, Inflow Depth > 1.61" for 2-yr event
Inflow = 0.64 cfs @ 12.09 hrs, Volume= 0.041 af
Outflow = 0.64 cfs @ 12.09 hrs, Volume= 0.041 af, Atten= 0%, Lag= 0.0 min
Primary = 0.64 cfs @ 12.09 hrs, Volume= 0.041 af
Routed to Pond 5P : Level Lip Speader

Routing by Stor-Ind method, Time Span= 5.00-20.00 hrs, dt= 0.05 hrs
Peak Elev= 19.15' @ 12.09 hrs

Device	Routing	Invert	Outlet Devices
#1	Primary	18.75'	**18.0" Round Culvert** L= 40.0' CPP, projecting, no headwall, Ke= 0.900 Inlet / Outlet Invert= 18.75' / 18.00' S= 0.0187 '/' Cc= 0.900 n= 0.013 Corrugated PE, smooth interior, Flow Area= 1.77 sf

Primary OutFlow Max=0.62 cfs @ 12.09 hrs HW=19.14' (Free Discharge)
1=Culvert (Inlet Controls 0.62 cfs @ 1.69 fps)

Pond 4P: CB-2

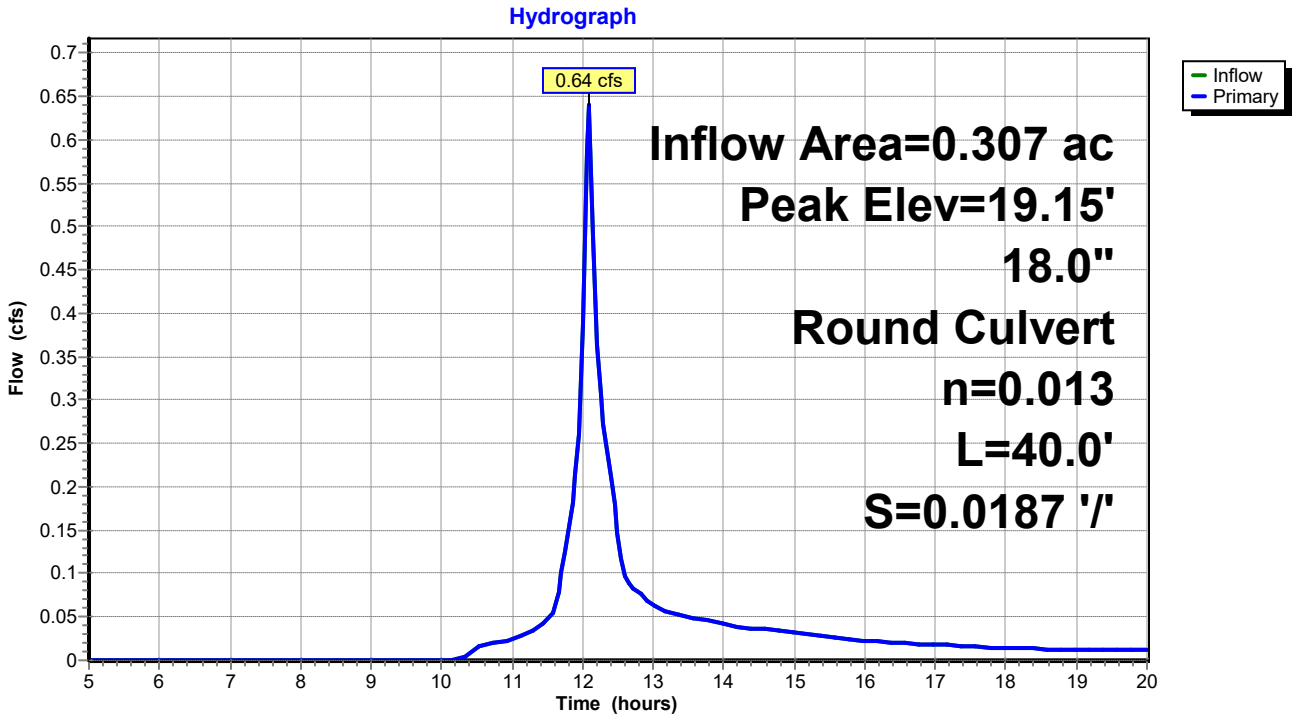

Summary for Pond 5P: Level Lip Speader

Inflow Area = 0.307 ac, 33.49% Impervious, Inflow Depth > 1.61" for 2-yr event
Inflow = 0.64 cfs @ 12.09 hrs, Volume= 0.041 af
Outflow = 0.61 cfs @ 12.11 hrs, Volume= 0.038 af, Atten= 4%, Lag= 1.4 min
Primary = 0.61 cfs @ 12.11 hrs, Volume= 0.038 af
Routed to Reach 2R : Reach 2

Routing by Stor-Ind method, Time Span= 5.00-20.00 hrs, dt= 0.05 hrs
Peak Elev= 18.00' @ 11.60 hrs Surf.Area= 168 sf Storage= 115 cf
Flood Elev= 20.00' Surf.Area= 168 sf Storage= 115 cf

Plug-Flow detention time= 32.2 min calculated for 0.038 af (93% of inflow)
Center-of-Mass det. time= 10.2 min (807.2 - 797.0)

Volume	Invert	Avail.Storage	Storage Description
#1	17.00'	115 cf	**Custom Stage Data (Prismatic)** Listed below (Recalc)

Elevation (feet)	Surf.Area (sq-ft)	Voids (%)	Inc.Store (cubic-feet)	Cum.Store (cubic-feet)
17.00	61	0.0	0	0
18.00	168	100.0	115	115

Device	Routing	Invert	Outlet Devices
#0	Primary	18.00'	**Automatic Storage Overflow** (Discharged without head)

Primary OutFlow Max=0.00 cfs @ 12.11 hrs HW=18.00' (Free Discharge)

Pond 5P: Level Lip Speader

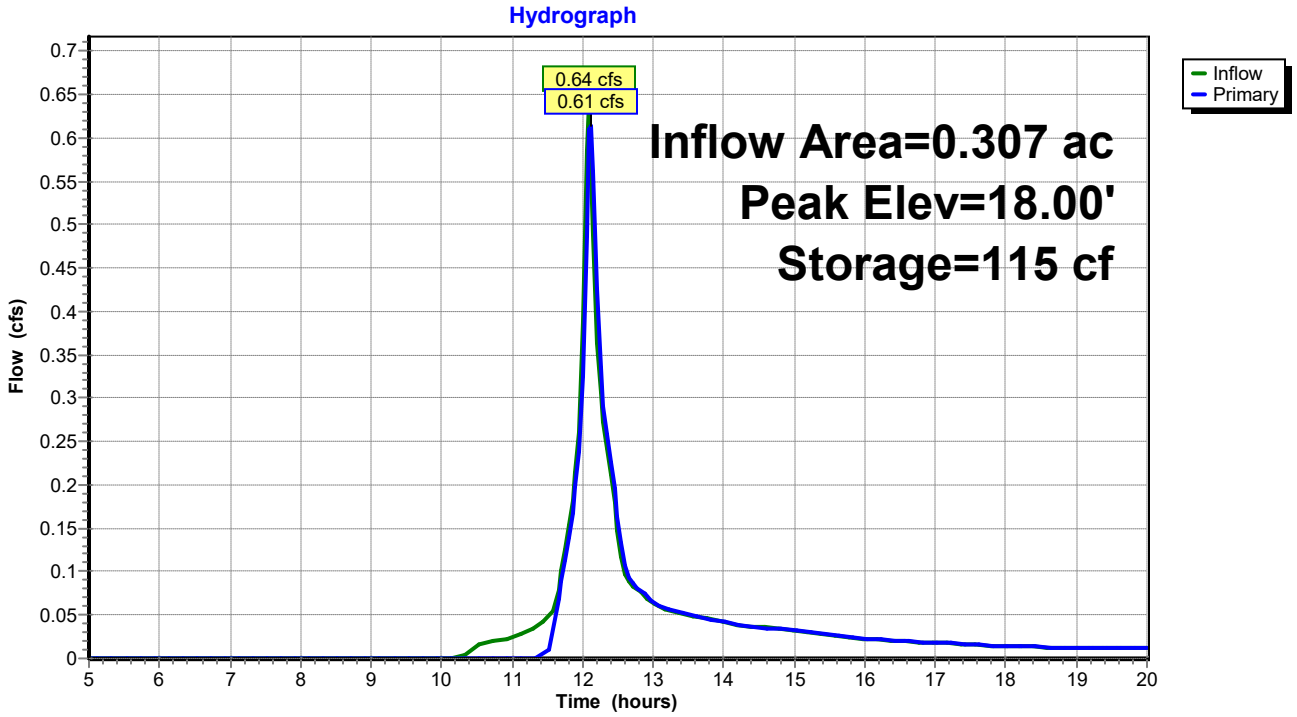

Summary for Link DP1: DP1

Inflow Area = 0.489 ac, 28.87% Impervious, Inflow Depth > 1.54" for 2-yr event
Inflow = 1.02 cfs @ 12.04 hrs, Volume= 0.063 af
Primary = 1.02 cfs @ 12.04 hrs, Volume= 0.063 af, Atten= 0%, Lag= 0.0 min
Routed to Reach SP1 : SACO RIVER / OCEAN

Primary outflow = Inflow, Time Span= 5.00-20.00 hrs, dt= 0.05 hrs

Link DP1: DP1

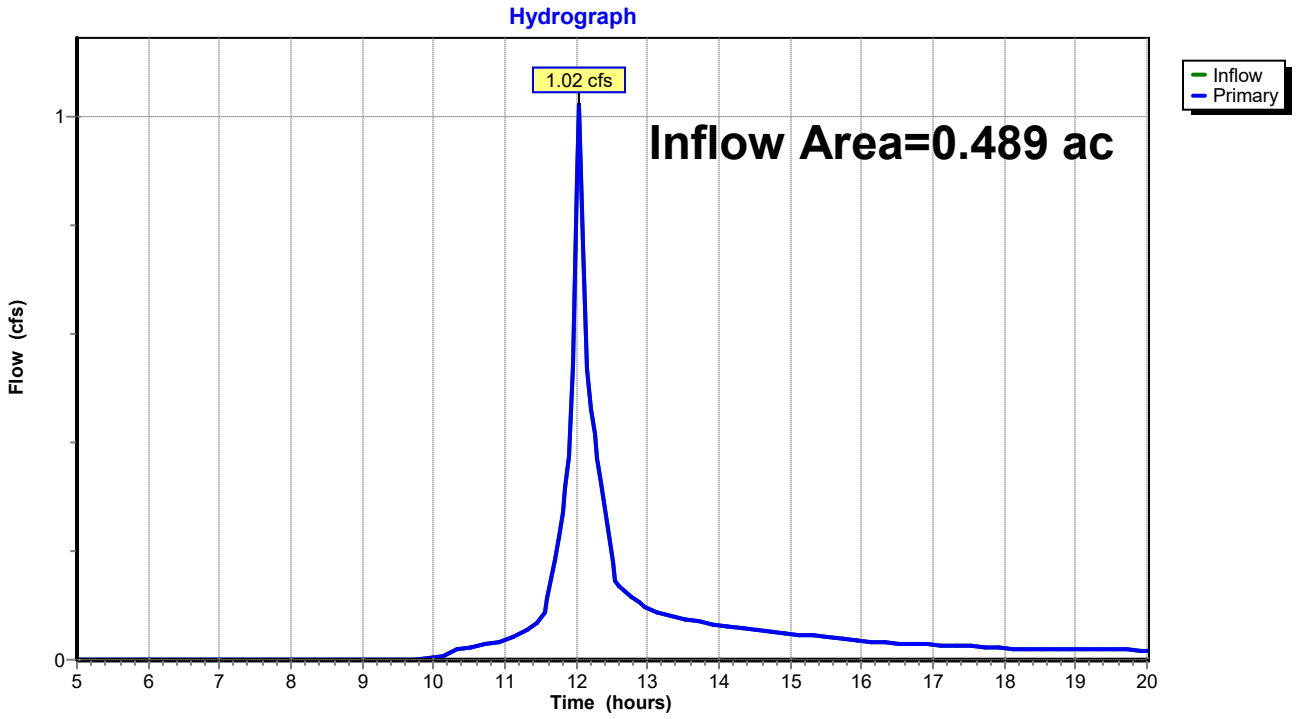

Summary for Link DP2: DP2

Inflow Area = 0.709 ac, 15.44% Impervious, Inflow Depth > 1.39" for 2-yr event
Inflow = 1.24 cfs @ 12.11 hrs, Volume= 0.082 af
Primary = 1.24 cfs @ 12.11 hrs, Volume= 0.082 af, Atten= 0%, Lag= 0.0 min
Routed to Reach SP1 : SACO RIVER / OCEAN

Primary outflow = Inflow, Time Span= 5.00-20.00 hrs, dt= 0.05 hrs

Link DP2: DP2

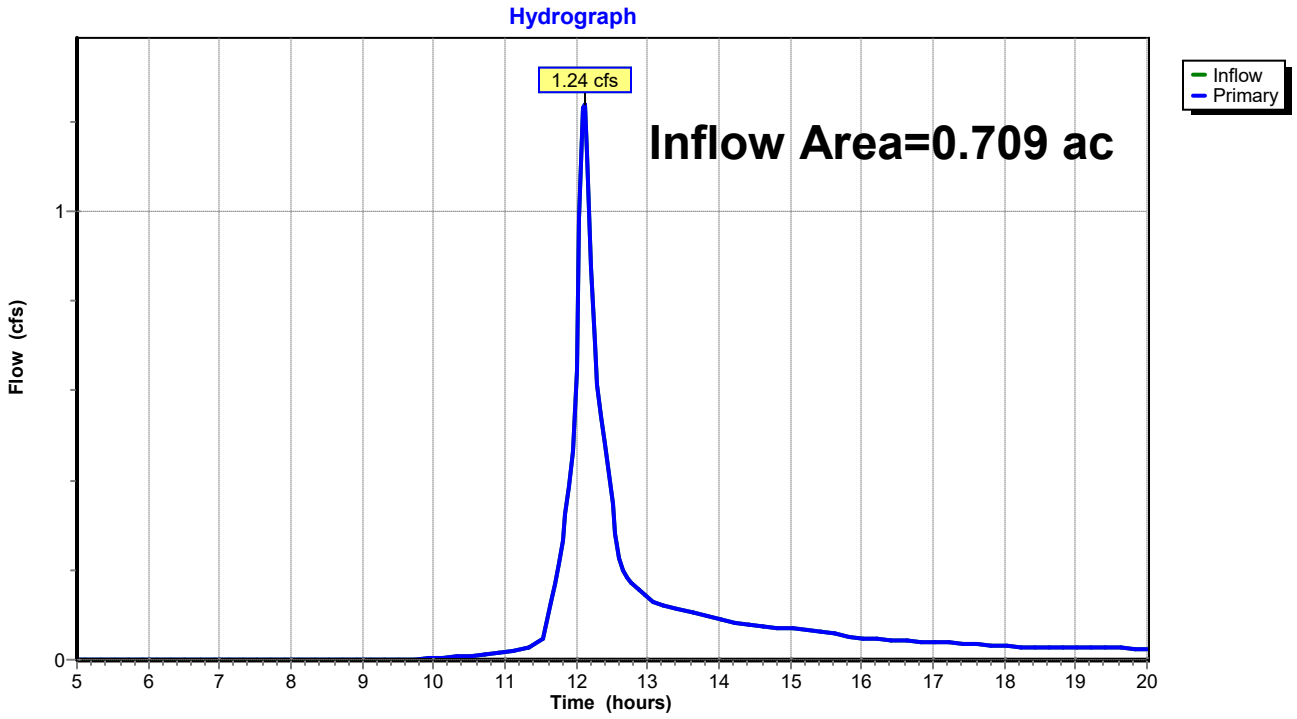

Time span=5.00-20.00 hrs, dt=0.05 hrs, 301 points
Runoff by SCS TR-20 method, UH=SCS, Weighted-CN
Reach routing by Stor-Ind method - Pond routing by Stor-Ind method

Subcatchment 1S: Post Subcatchment 1 Runoff Area=9,832 sf 50.01% Impervious Runoff Depth>3.28"
Flow Length=172' Tc=0.8 min CN=87 Runoff=1.02 cfs 0.062 af

Subcatchment 2S: Post Subcatchment 2 Runoff Area=11,488 sf 10.78% Impervious Runoff Depth>2.53"
Flow Length=133' Tc=3.4 min CN=79 Runoff=0.90 cfs 0.056 af

Subcatchment 3S: Post Subcatchment 3 Runoff Area=13,365 sf 33.49% Impervious Runoff Depth>2.98"
Flow Length=262' Tc=4.9 min CN=84 Runoff=1.15 cfs 0.076 af

Subcatchment 4S: Post Subcatchment 4 Runoff Area=17,529 sf 1.68% Impervious Runoff Depth>2.53"
Flow Length=126' Tc=7.2 min CN=79 Runoff=1.21 cfs 0.085 af

Subcatchment 5S: Post Subcatchment 5 Runoff Area=59,179 sf 4.06% Impervious Runoff Depth>2.62"
Flow Length=445' Tc=7.0 min CN=80 Runoff=4.26 cfs 0.297 af

Reach 1R: Reach 1 Inflow=0.99 cfs 0.060 af
Outflow=0.99 cfs 0.060 af

Reach 2R: Reach 2 Inflow=1.10 cfs 0.073 af
Outflow=1.10 cfs 0.073 af

Reach DP3: Shoreline 3 Inflow=4.26 cfs 0.297 af
Outflow=4.26 cfs 0.297 af

Reach SP1: SACO RIVER / OCEAN Inflow=7.94 cfs 0.570 af
Outflow=7.94 cfs 0.570 af

Pond 1P: Bioretention Filter Cell 1 Peak Elev=18.16' Storage=92 cf Inflow=1.02 cfs 0.062 af
Outflow=0.99 cfs 0.060 af

Pond 2P: CB-1 Peak Elev=14.29' Inflow=0.99 cfs 0.060 af
15.0" Round Culvert n=0.013 L=48.0' S=0.0365 '/' Outflow=0.99 cfs 0.060 af

Pond 3P: Bioretention Filter Cell 2 Peak Elev=23.68' Storage=77 cf Inflow=1.15 cfs 0.076 af
Outflow=1.14 cfs 0.075 af

Pond 4P: CB-2 Peak Elev=19.29' Inflow=1.14 cfs 0.075 af
18.0" Round Culvert n=0.013 L=40.0' S=0.0187 '/' Outflow=1.14 cfs 0.075 af

Pond 5P: Level Lip Speader Peak Elev=18.00' Storage=115 cf Inflow=1.14 cfs 0.075 af
Outflow=1.10 cfs 0.073 af

Link DP1: DP1 Inflow=1.85 cfs 0.116 af
Primary=1.85 cfs 0.116 af

Link DP2: DP2 Inflow=2.31 cfs 0.158 af
Primary=2.31 cfs 0.158 af

Total Runoff Area = 2.557 ac Runoff Volume = 0.575 af Average Runoff Depth = 2.70"
88.04% Pervious = 2.251 ac 11.96% Impervious = 0.306 ac

Summary for Subcatchment 1S: Post Subcatchment 1

Runoff = 1.02 cfs @ 12.01 hrs, Volume= 0.062 af, Depth> 3.28"
Routed to Pond 1P : Bioretention Filter Cell 1

Runoff by SCS TR-20 method, UH=SCS, Weighted-CN, Time Span= 5.00-20.00 hrs, dt= 0.05 hrs
Type III 24-hr 10-yr Rainfall=4.90"

	Area (sf)	CN	Description
	3,430	77	Woods, Good, HSG D
*	982	98	Ledge, HSG D
	595	80	>75% Grass cover, Good, HSG D
*	3,935	98	Paved Access Drive, HSG D
*	890	73	Bioretention Filter Cell, Good, HSG D
	9,832	87	Weighted Average
	4,915		49.99% Pervious Area
	4,917		50.01% Impervious Area

Tc (min)	Length (feet)	Slope (ft/ft)	Velocity (ft/sec)	Capacity (cfs)	Description
0.4	46	0.0500	1.73		**Sheet Flow, Tc-1** Smooth surfaces n= 0.011 P2= 3.30"
0.3	102	0.0500	5.25	15.74	**Channel Flow, Tc-2** Area= 3.0 sf Perim= 9.2' r= 0.33' n= 0.030 Earth, grassed & winding
0.1	24	0.0625	3.75		**Shallow Concentrated Flow, Tc-3** Grassed Waterway Kv= 15.0 fps
0.8	172	Total			

Subcatchment 1S: Post Subcatchment 1

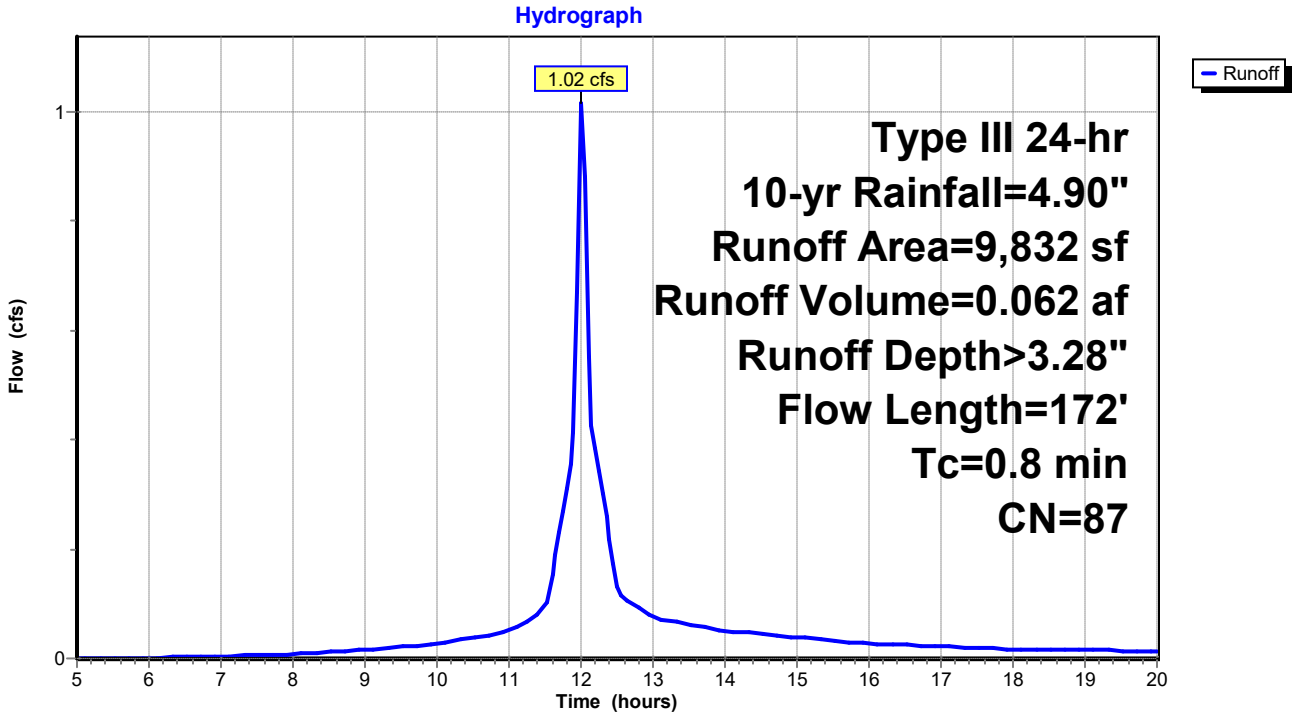

Summary for Subcatchment 2S: Post Subcatchment 2

Runoff = 0.90 cfs @ 12.06 hrs, Volume= 0.056 af, Depth> 2.53"
Routed to Link DP1 : DP1

Runoff by SCS TR-20 method, UH=SCS, Weighted-CN, Time Span= 5.00-20.00 hrs, dt= 0.05 hrs
Type III 24-hr 10-yr Rainfall=4.90"

Area (sf)	CN	Description
10,250	77	Woods, Good, HSG D
1,238	98	Paved parking, HSG D
11,488	79	Weighted Average
10,250		89.22% Pervious Area
1,238		10.78% Impervious Area

Tc (min)	Length (feet)	Slope (ft/ft)	Velocity (ft/sec)	Capacity (cfs)	Description
2.5	21	0.1905	0.14		**Sheet Flow, Tc-1** Woods: Light underbrush n= 0.400 P2= 3.30"
0.9	112	0.1696	2.06		**Shallow Concentrated Flow, Tc-2** Woodland Kv= 5.0 fps
3.4	133	Total			

Subcatchment 2S: Post Subcatchment 2

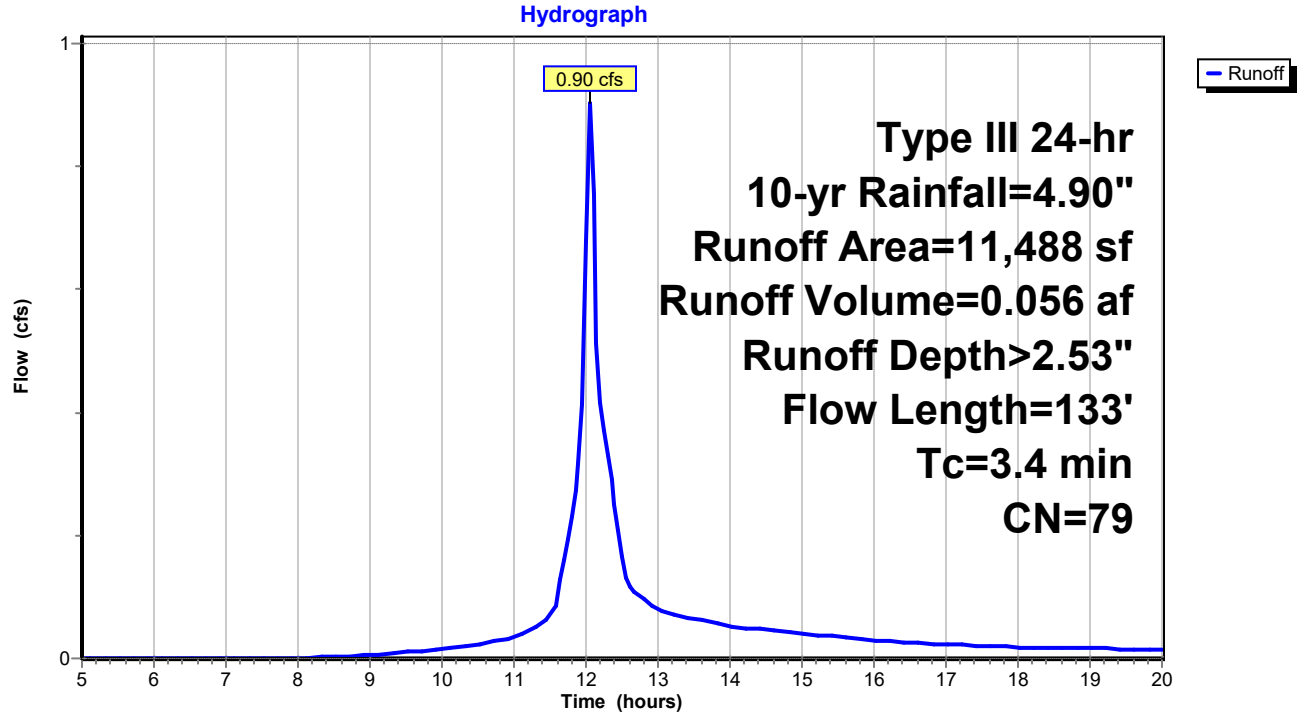

Summary for Subcatchment 3S: Post Subcatchment 3

Runoff = 1.15 cfs @ 12.07 hrs, Volume= 0.076 af, Depth> 2.98"
Routed to Pond 3P : Bioretention Filter Cell 2

Runoff by SCS TR-20 method, UH=SCS, Weighted-CN, Time Span= 5.00-20.00 hrs, dt= 0.05 hrs
Type III 24-hr 10-yr Rainfall=4.90"

	Area (sf)	CN	Description
	6,822	77	Woods, Good, HSG D
*	580	73	Biofiltration cell, Good, HSG D
*	3,768	98	Paved access drive, HSG D
	1,487	80	>75% Grass cover, Good, HSG D
*	708	98	Ledge, HSG D
	13,365	84	Weighted Average
	8,889		66.51% Pervious Area
	4,476		33.49% Impervious Area

Tc (min)	Length (feet)	Slope (ft/ft)	Velocity (ft/sec)	Capacity (cfs)	Description
4.2	43	0.2093	0.17		**Sheet Flow, Tc-1** Woods: Light underbrush n= 0.400 P2= 3.30"
0.7	214	0.0500	5.25	15.74	**Channel Flow, Tc-2** Area= 3.0 sf Perim= 9.2' r= 0.33' n= 0.030 Earth, grassed & winding
0.0	5	0.0500	3.35		**Shallow Concentrated Flow, Tc-3** Grassed Waterway Kv= 15.0 fps
4.9	262	Total			

Subcatchment 3S: Post Subcatchment 3

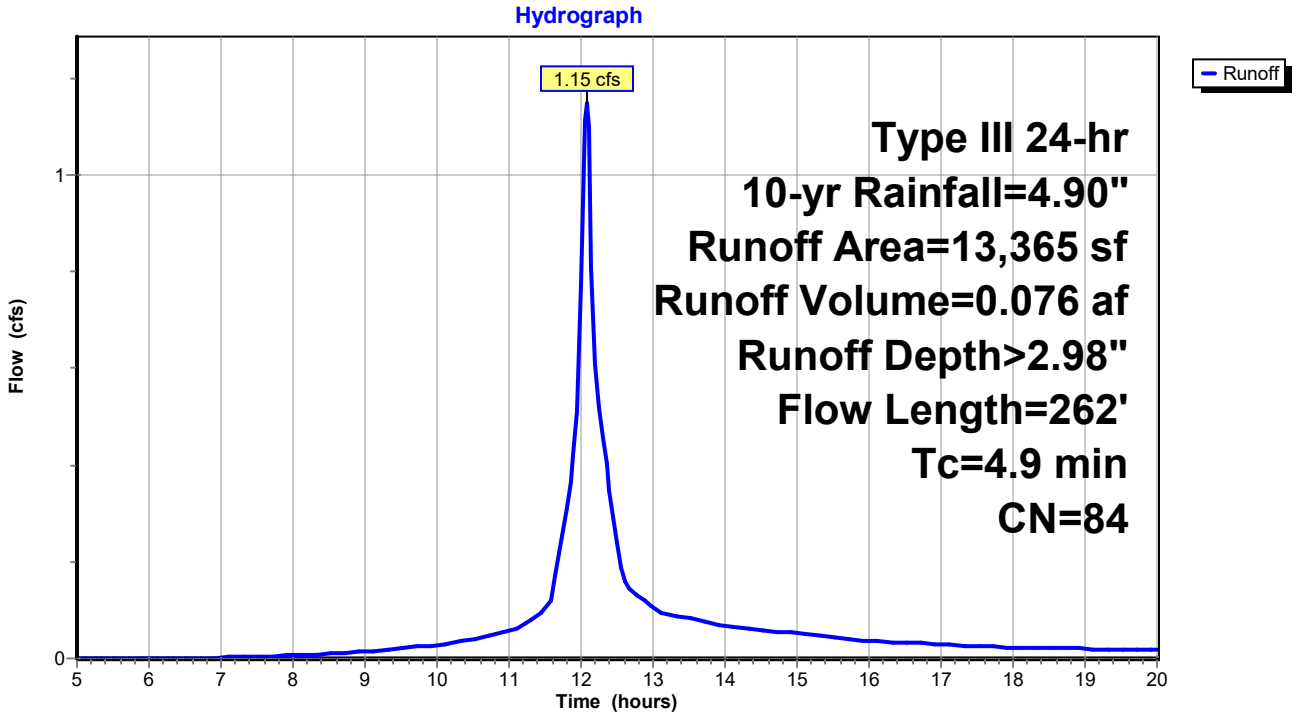

Summary for Subcatchment 4S: Post Subcatchment 4

Runoff = 1.21 cfs @ 12.11 hrs, Volume= 0.085 af, Depth> 2.53"
Routed to Link DP2 : DP2

Runoff by SCS TR-20 method, UH=SCS, Weighted-CN, Time Span= 5.00-20.00 hrs, dt= 0.05 hrs
Type III 24-hr 10-yr Rainfall=4.90"

	Area (sf)	CN	Description
*	295	98	Paved access drive, HSG D
	1,450	80	>75% Grass cover, Good, HSG D
	15,784	79	Woods, Fair, HSG D
	17,529	79	Weighted Average
	17,234		98.32% Pervious Area
	295		1.68% Impervious Area

Tc (min)	Length (feet)	Slope (ft/ft)	Velocity (ft/sec)	Capacity (cfs)	Description
6.8	62	0.1290	0.15		**Sheet Flow, Tc-1** Woods: Light underbrush n= 0.400 P2= 3.30"
0.4	64	0.2343	2.42		**Shallow Concentrated Flow, Tc-2** Woodland Kv= 5.0 fps
7.2	126	Total			

Subcatchment 4S: Post Subcatchment 4

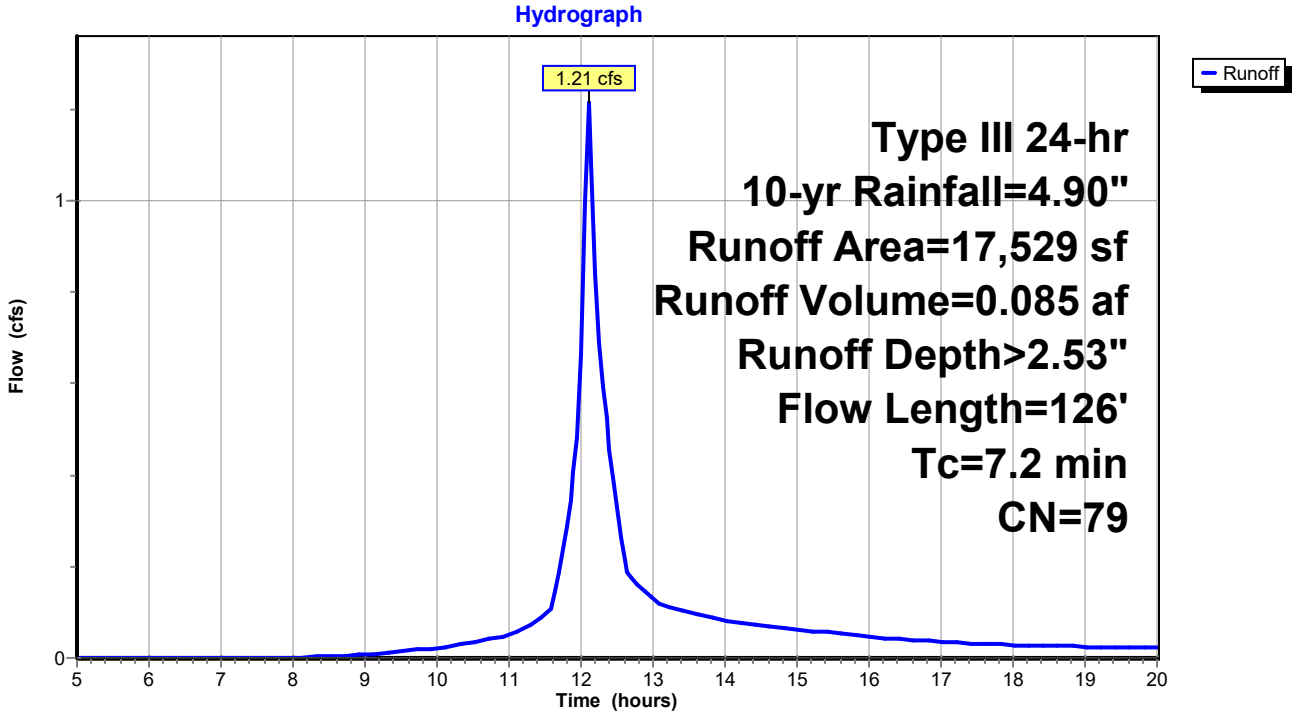

Summary for Subcatchment 5S: Post Subcatchment 5

Runoff = 4.26 cfs @ 12.10 hrs, Volume= 0.297 af, Depth> 2.62"
Routed to Reach DP3 : Shoreline 3

Runoff by SCS TR-20 method, UH=SCS, Weighted-CN, Time Span= 5.00-20.00 hrs, dt= 0.05 hrs
Type III 24-hr 10-yr Rainfall=4.90"

	Area (sf)	CN	Description
*	1,650	98	Paved acccess drive, HSG D
	751	98	Roofs, HSG D
*	6,955	88	Sand beach, HSG D
	3,872	96	Gravel surface, HSG D
	45,951	77	Woods, Good, HSG D
	59,179	80	Weighted Average
	56,778		95.94% Pervious Area
	2,401		4.06% Impervious Area

Tc (min)	Length (feet)	Slope (ft/ft)	Velocity (ft/sec)	Capacity (cfs)	Description
2.7	23	0.1740	0.14		**Sheet Flow, Tc-1** Woods: Light underbrush n= 0.400 P2= 3.30"
1.0	70	0.0574	1.20		**Shallow Concentrated Flow, Tc-2** Woodland Kv= 5.0 fps
0.5	170	0.1059	5.24		**Shallow Concentrated Flow, Tc-3** Unpaved Kv= 16.1 fps
2.5	140	0.0357	0.94		**Shallow Concentrated Flow, Tc-4** Woodland Kv= 5.0 fps
0.3	42	0.0714	2.67		**Shallow Concentrated Flow, Tc-5** Nearly Bare & Untilled Kv= 10.0 fps
7.0	445	Total			

Subcatchment 5S: Post Subcatchment 5

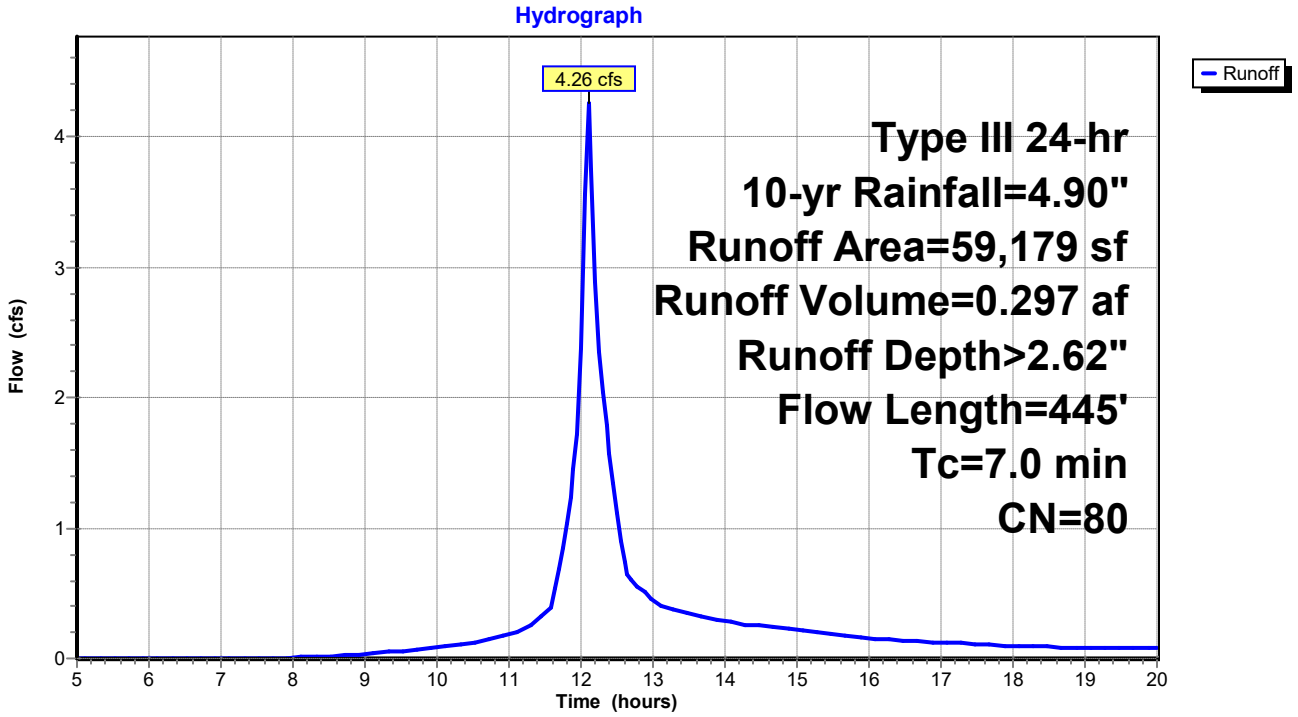

Summary for Reach 1R: Reach 1

Inflow Area = 0.226 ac, 50.01% Impervious, Inflow Depth > 3.21" for 10-yr event
Inflow = 0.99 cfs @ 12.02 hrs, Volume= 0.060 af
Outflow = 0.99 cfs @ 12.02 hrs, Volume= 0.060 af, Atten= 0%, Lag= 0.0 min
Routed to Link DP1 : DP1

Routing by Stor-Ind method, Time Span= 5.00-20.00 hrs, dt= 0.05 hrs

Reach 1R: Reach 1

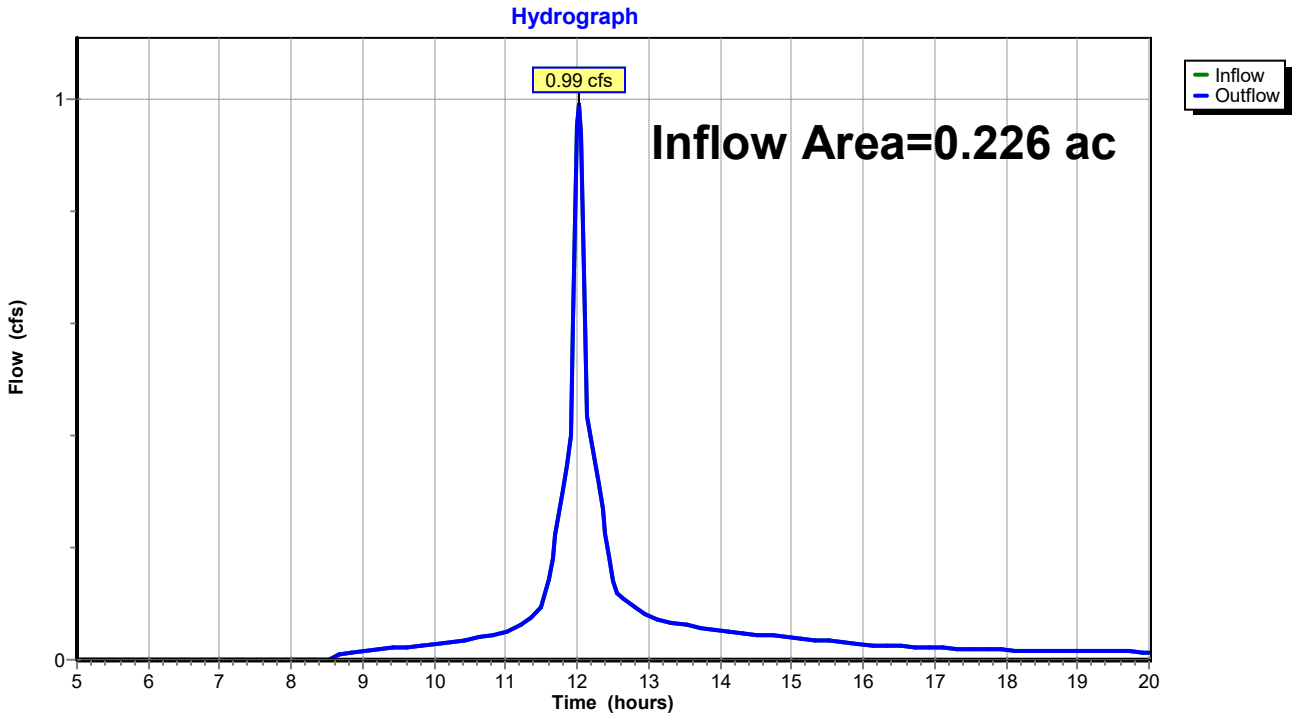

Summary for Reach 2R: Reach 2

Inflow Area = 0.307 ac, 33.49% Impervious, Inflow Depth > 2.84" for 10-yr event
Inflow = 1.10 cfs @ 12.11 hrs, Volume= 0.073 af
Outflow = 1.10 cfs @ 12.11 hrs, Volume= 0.073 af, Atten= 0%, Lag= 0.0 min
Routed to Link DP2 : DP2

Routing by Stor-Ind method, Time Span= 5.00-20.00 hrs, dt= 0.05 hrs

Reach 2R: Reach 2

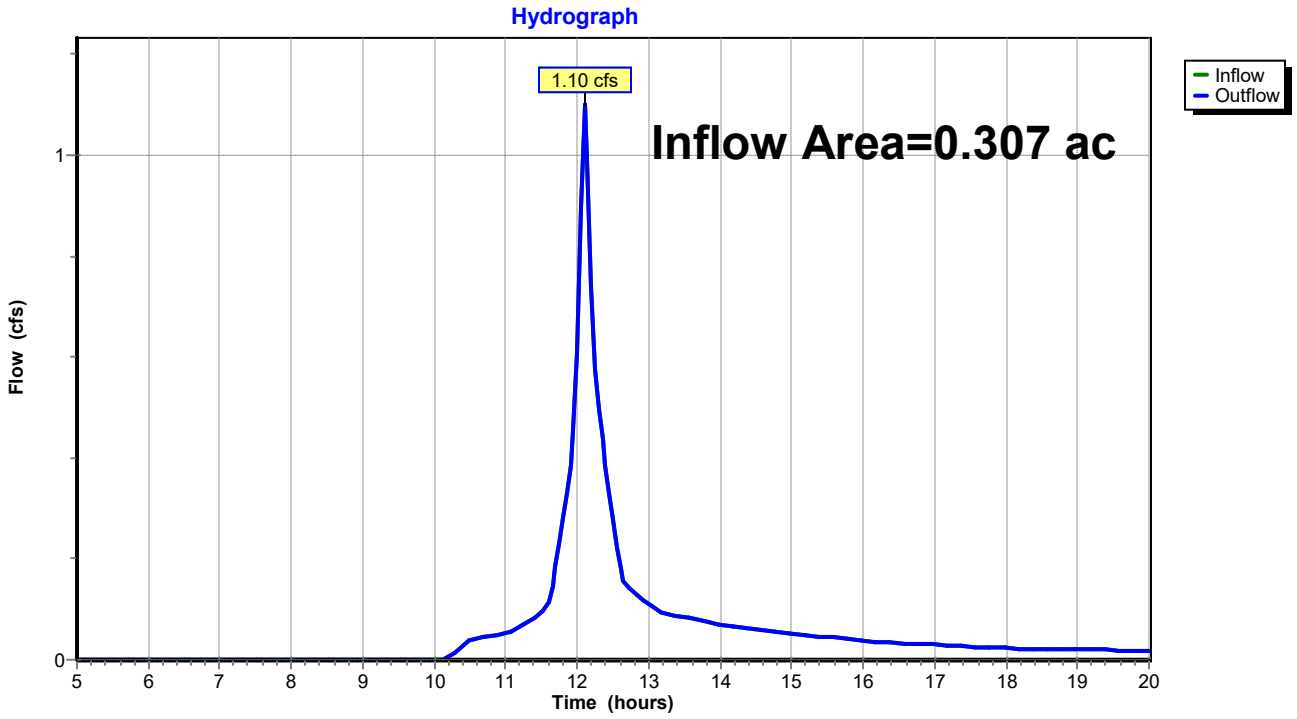

Summary for Reach DP3: Shoreline 3

Inflow Area = 1.359 ac, 4.06% Impervious, Inflow Depth > 2.62" for 10-yr event
Inflow = 4.26 cfs @ 12.10 hrs, Volume= 0.297 af
Outflow = 4.26 cfs @ 12.10 hrs, Volume= 0.297 af, Atten= 0%, Lag= 0.0 min
Routed to Reach SP1 : SACO RIVER / OCEAN

Routing by Stor-Ind method, Time Span= 5.00-20.00 hrs, dt= 0.05 hrs

Reach DP3: Shoreline 3

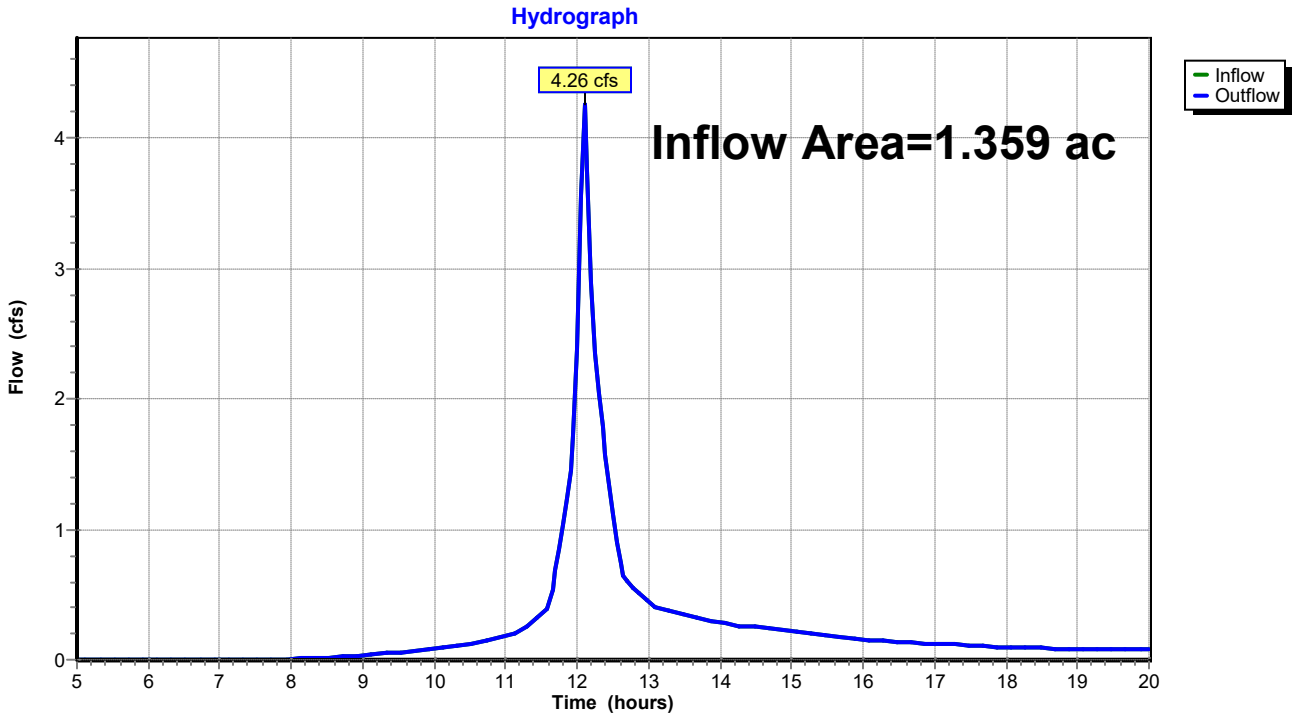

Summary for Reach SP1: SACO RIVER / OCEAN

Inflow Area = 2.557 ac, 11.96% Impervious, Inflow Depth > 2.68" for 10-yr event
Inflow = 7.94 cfs @ 12.09 hrs, Volume= 0.570 af
Outflow = 7.94 cfs @ 12.09 hrs, Volume= 0.570 af, Atten= 0%, Lag= 0.0 min

Routing by Stor-Ind method, Time Span= 5.00-20.00 hrs, dt= 0.05 hrs

Reach SP1: SACO RIVER / OCEAN

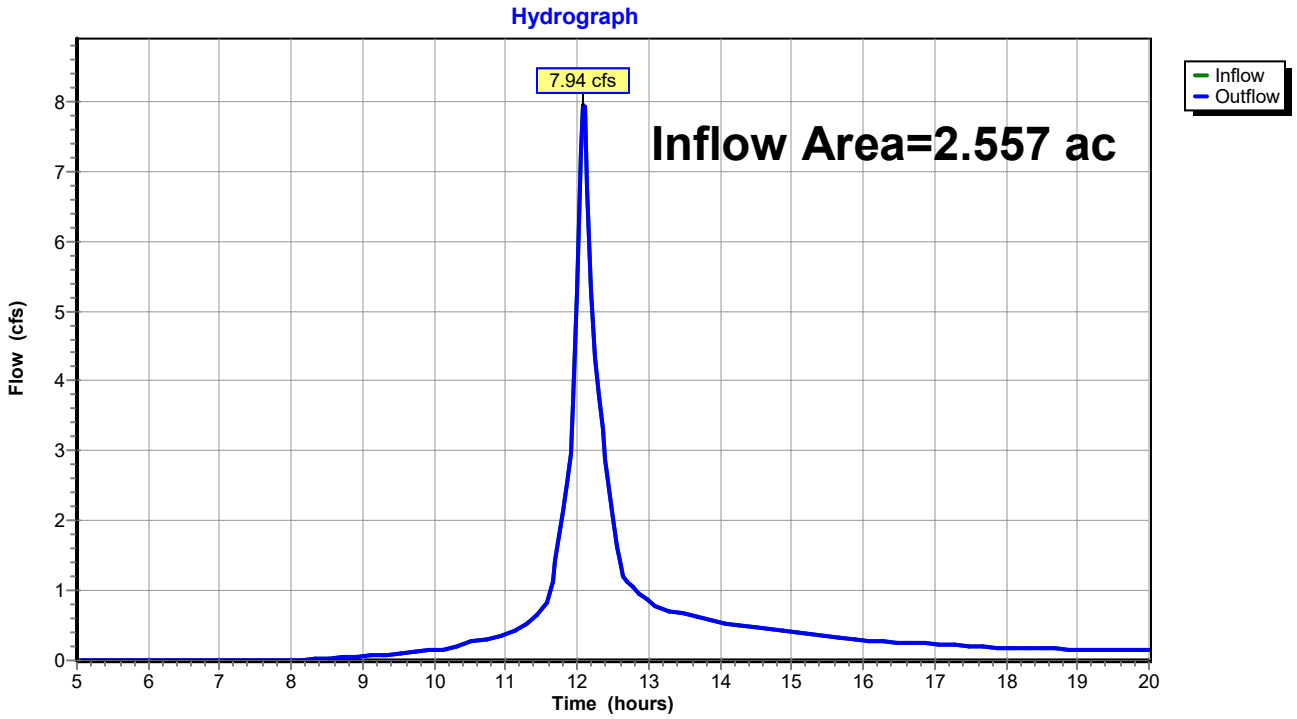

Summary for Pond 1P: Bioretention Filter Cell 1

Inflow Area = 0.226 ac, 50.01% Impervious, Inflow Depth > 3.28" for 10-yr event
Inflow = 1.02 cfs @ 12.01 hrs, Volume= 0.062 af
Outflow = 0.99 cfs @ 12.02 hrs, Volume= 0.060 af, Atten= 3%, Lag= 0.7 min
Primary = 0.99 cfs @ 12.02 hrs, Volume= 0.060 af
Routed to Pond 2P : CB-1

Routing by Stor-Ind method, Time Span= 5.00-20.00 hrs, dt= 0.05 hrs
Peak Elev= 18.16' @ 12.02 hrs Surf.Area= 264 sf Storage= 92 cf

Plug-Flow detention time= 15.2 min calculated for 0.060 af (98% of inflow)
Center-of-Mass det. time= 7.1 min (773.3 - 766.2)

Volume	Invert	Avail.Storage	Storage Description
#1	17.50'	200 cf	**Custom Stage Data (Prismatic)** Listed below (Recalc)

Elevation (feet)	Surf.Area (sq-ft)	Inc.Store (cubic-feet)	Cum.Store (cubic-feet)
17.50	0	0	0
18.00	213	53	53
18.50	372	146	200

Device	Routing	Invert	Outlet Devices
#1	Primary	18.00'	**18.0" Horiz. Orifice/Grate** C= 0.600 in 24.0" Grate (56% open area) Limited to weir flow at low heads

Primary OutFlow Max=0.94 cfs @ 12.02 hrs HW=18.16' (Free Discharge)
↑—**1=Orifice/Grate** (Weir Controls 0.94 cfs @ 1.29 fps)

Pond 1P: Bioretention Filter Cell 1

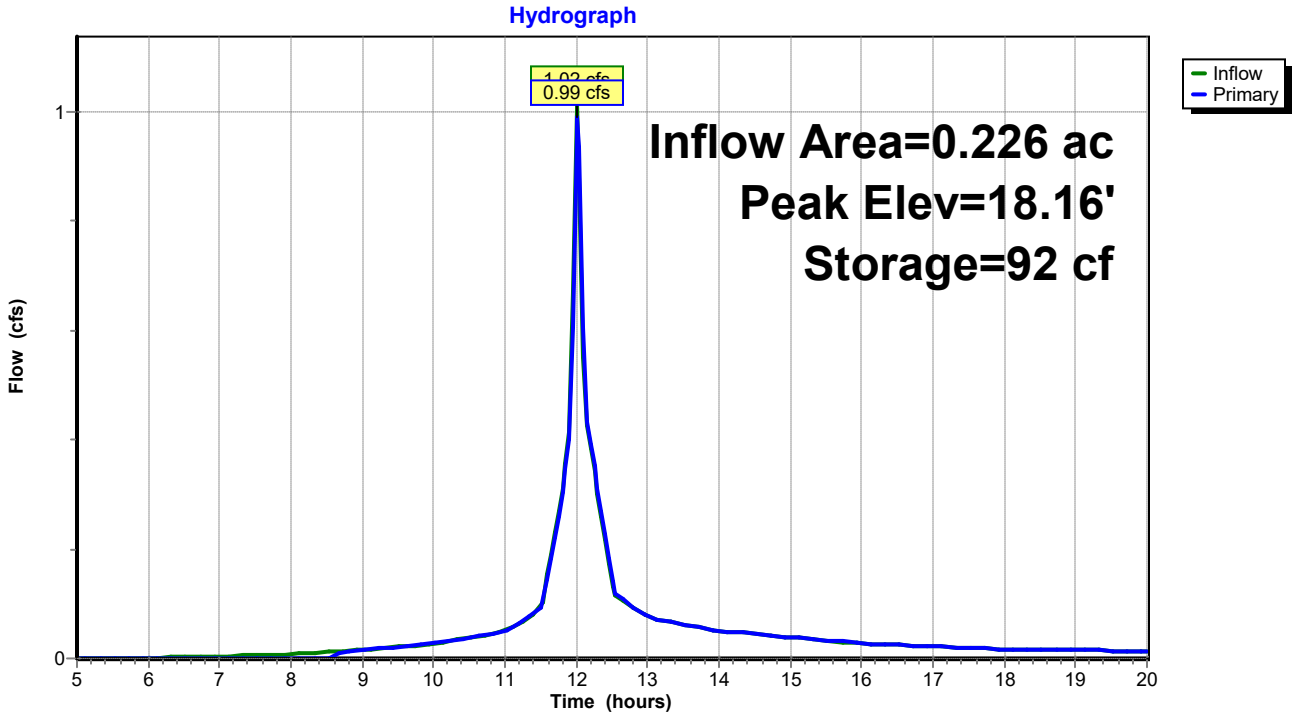

Summary for Pond 2P: CB-1

Inflow Area = 0.226 ac, 50.01% Impervious, Inflow Depth > 3.21" for 10-yr event
Inflow = 0.99 cfs @ 12.02 hrs, Volume= 0.060 af
Outflow = 0.99 cfs @ 12.02 hrs, Volume= 0.060 af, Atten= 0%, Lag= 0.0 min
Primary = 0.99 cfs @ 12.02 hrs, Volume= 0.060 af
Routed to Reach 1R : Reach 1

Routing by Stor-Ind method, Time Span= 5.00-20.00 hrs, dt= 0.05 hrs
Peak Elev= 14.29' @ 12.02 hrs

Device	Routing	Invert	Outlet Devices
#1	Primary	13.75'	**15.0" Round Culvert** L= 48.0' CPP, projecting, no headwall, Ke= 0.900 Inlet / Outlet Invert= 13.75' / 12.00' S= 0.0365 '/' Cc= 0.900 n= 0.013 Corrugated PE, smooth interior, Flow Area= 1.23 sf

Primary OutFlow Max=0.94 cfs @ 12.02 hrs HW=14.27' (Free Discharge)
1=Culvert (Inlet Controls 0.94 cfs @ 1.94 fps)

Pond 2P: CB-1

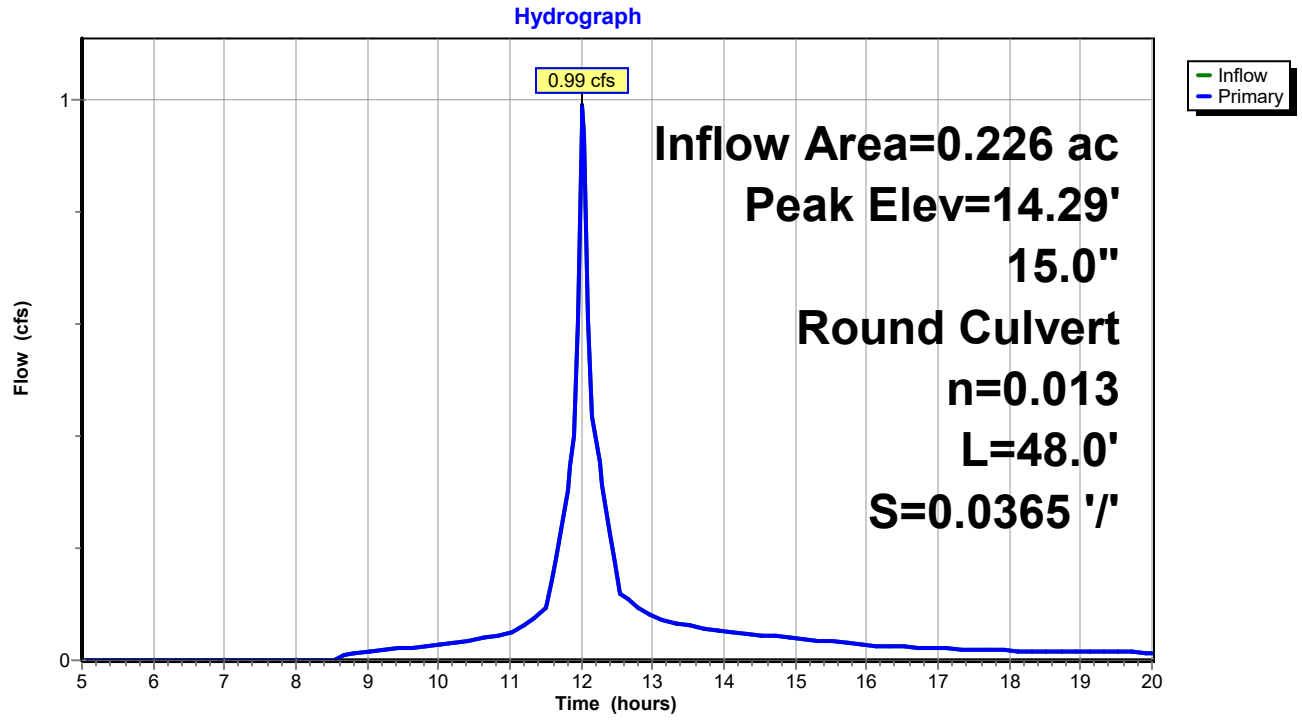

Summary for Pond 3P: Bioretention Filter Cell 2

Inflow Area = 0.307 ac, 33.49% Impervious, Inflow Depth > 2.98" for 10-yr event
Inflow = 1.15 cfs @ 12.07 hrs, Volume= 0.076 af
Outflow = 1.14 cfs @ 12.08 hrs, Volume= 0.075 af, Atten= 0%, Lag= 0.6 min
Primary = 1.14 cfs @ 12.08 hrs, Volume= 0.075 af
Routed to Pond 4P : CB-2

Routing by Stor-Ind method, Time Span= 5.00-20.00 hrs, dt= 0.05 hrs
Peak Elev= 23.68' @ 12.08 hrs Surf.Area= 227 sf Storage= 77 cf

Plug-Flow detention time= 9.5 min calculated for 0.075 af (98% of inflow)
Center-of-Mass det. time= 4.4 min (781.8 - 777.5)

Volume	Invert	Avail.Storage	Storage Description
#1	23.00'	380 cf	**Custom Stage Data (Prismatic)** Listed below (Recalc)

Elevation (feet)	Surf.Area (sq-ft)	Inc.Store (cubic-feet)	Cum.Store (cubic-feet)
23.00	0	0	0
24.00	335	168	168
24.50	515	213	380

Device	Routing	Invert	Outlet Devices
#1	Primary	23.50'	**18.0" Horiz. Orifice/Grate** C= 0.600 in 24.0" Grate (56% open area) Limited to weir flow at low heads

Primary OutFlow Max=1.11 cfs @ 12.08 hrs HW=23.67' (Free Discharge)
↑**1=Orifice/Grate** (Weir Controls 1.11 cfs @ 1.36 fps)

Pond 3P: Bioretention Filter Cell 2

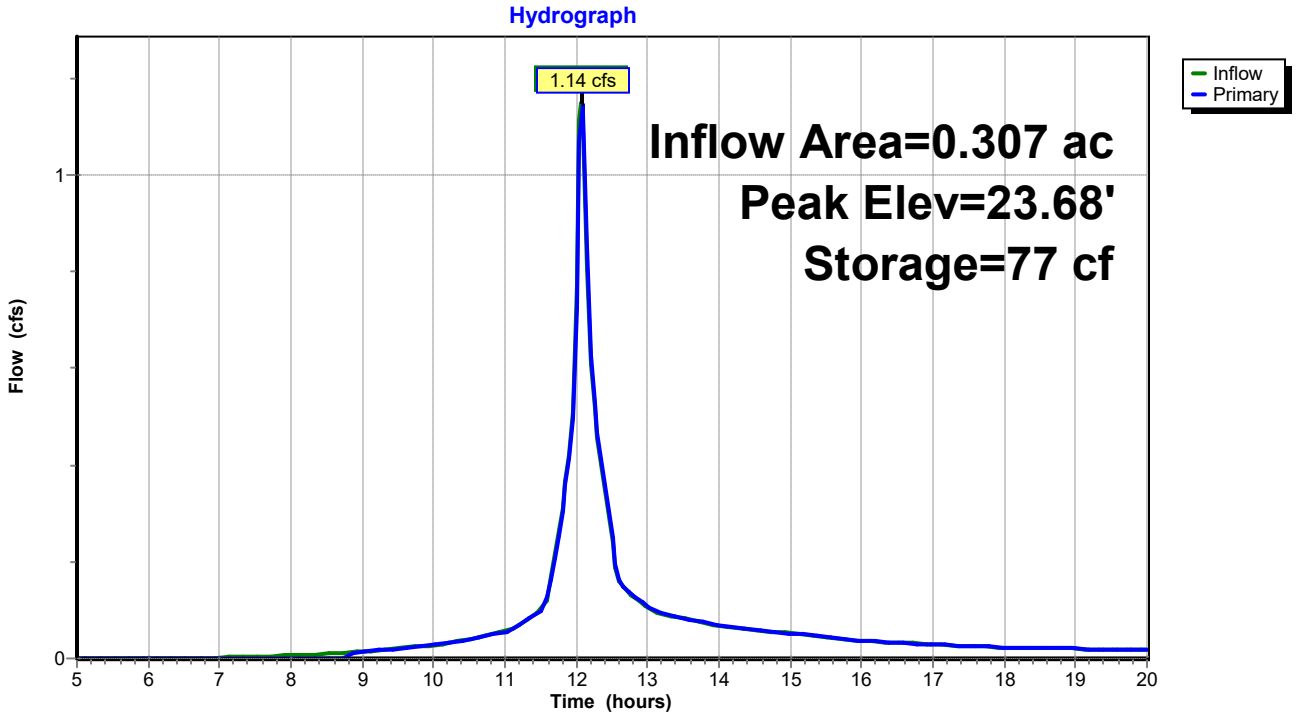

Summary for Pond 4P: CB-2

Inflow Area = 0.307 ac, 33.49% Impervious, Inflow Depth > 2.95" for 10-yr event
Inflow = 1.14 cfs @ 12.08 hrs, Volume= 0.075 af
Outflow = 1.14 cfs @ 12.08 hrs, Volume= 0.075 af, Atten= 0%, Lag= 0.0 min
Primary = 1.14 cfs @ 12.08 hrs, Volume= 0.075 af
Routed to Pond 5P : Level Lip Speader

Routing by Stor-Ind method, Time Span= 5.00-20.00 hrs, dt= 0.05 hrs
Peak Elev= 19.29' @ 12.08 hrs

Device	Routing	Invert	Outlet Devices
#1	Primary	18.75'	**18.0" Round Culvert** L= 40.0' CPP, projecting, no headwall, Ke= 0.900 Inlet / Outlet Invert= 18.75' / 18.00' S= 0.0187 '/' Cc= 0.900 n= 0.013 Corrugated PE, smooth interior, Flow Area= 1.77 sf

Primary OutFlow Max=1.11 cfs @ 12.08 hrs HW=19.28' (Free Discharge)
1=Culvert (Inlet Controls 1.11 cfs @ 1.96 fps)

Pond 4P: CB-2

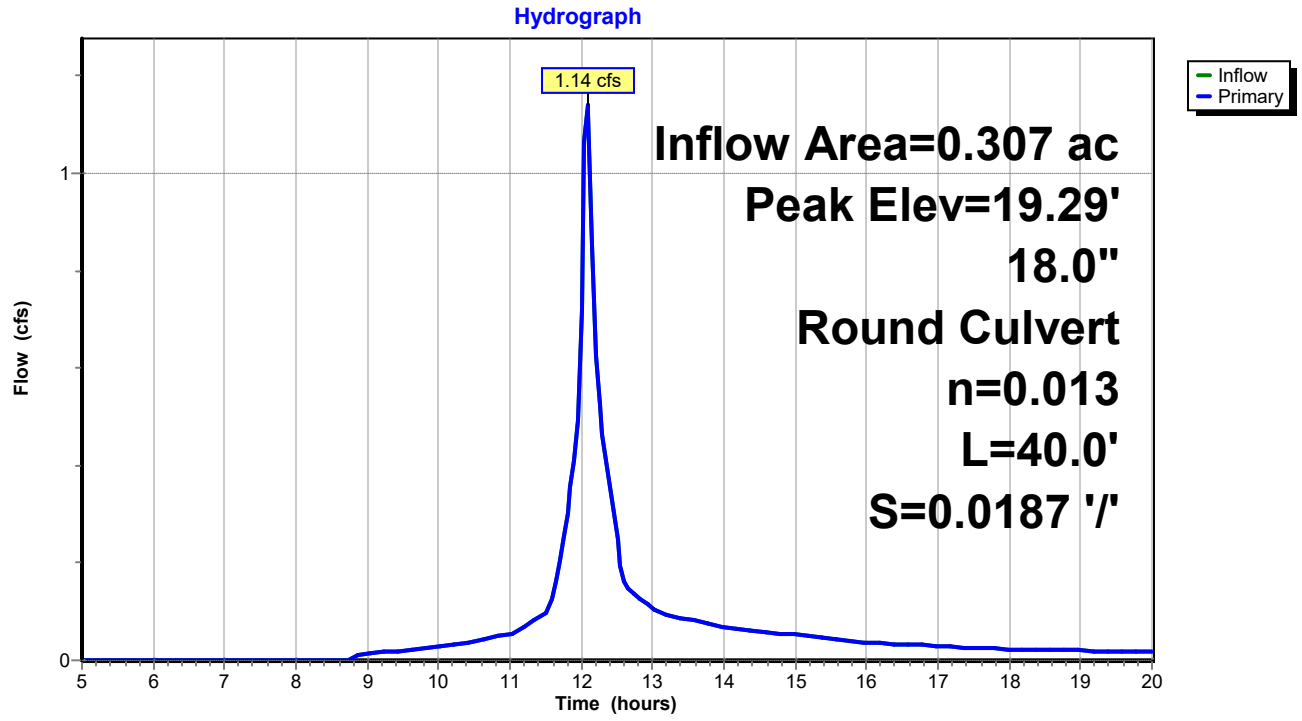

Summary for Pond 5P: Level Lip Speader

Inflow Area = 0.307 ac, 33.49% Impervious, Inflow Depth > 2.95" for 10-yr event
Inflow = 1.14 cfs @ 12.08 hrs, Volume= 0.075 af
Outflow = 1.10 cfs @ 12.11 hrs, Volume= 0.073 af, Atten= 4%, Lag= 1.4 min
Primary = 1.10 cfs @ 12.11 hrs, Volume= 0.073 af
Routed to Reach 2R : Reach 2

Routing by Stor-Ind method, Time Span= 5.00-20.00 hrs, dt= 0.05 hrs
Peak Elev= 18.00' @ 10.30 hrs Surf.Area= 168 sf Storage= 115 cf
Flood Elev= 20.00' Surf.Area= 168 sf Storage= 115 cf

Plug-Flow detention time= 21.7 min calculated for 0.072 af (96% of inflow)
Center-of-Mass det. time= 8.6 min (790.4 - 781.8)

Volume	Invert	Avail.Storage	Storage Description
#1	17.00'	115 cf	**Custom Stage Data (Prismatic)** Listed below (Recalc)

Elevation (feet)	Surf.Area (sq-ft)	Voids (%)	Inc.Store (cubic-feet)	Cum.Store (cubic-feet)
17.00	61	0.0	0	0
18.00	168	100.0	115	115

Device	Routing	Invert	Outlet Devices
#0	Primary	18.00'	**Automatic Storage Overflow** (Discharged without head)

Primary OutFlow Max=0.00 cfs @ 12.11 hrs HW=18.00' (Free Discharge)

Pond 5P: Level Lip Speader

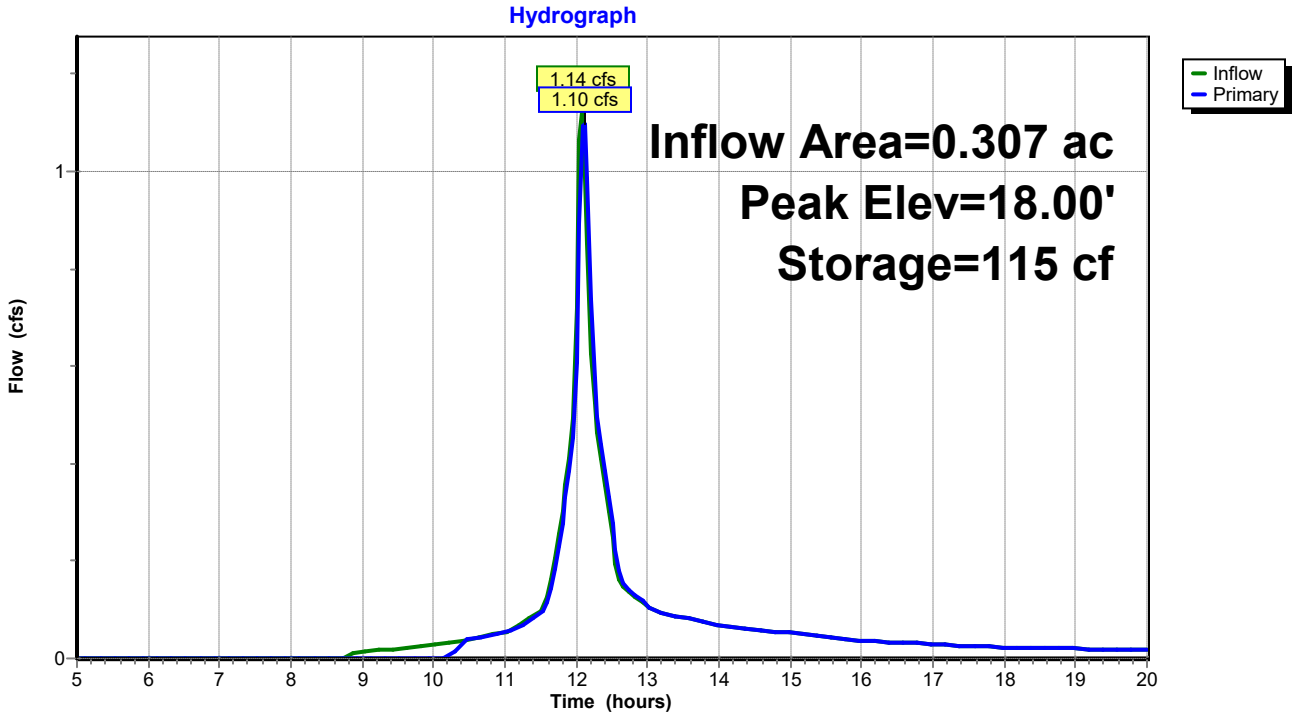

Summary for Link DP1: DP1

Inflow Area = 0.489 ac, 28.87% Impervious, Inflow Depth > 2.85" for 10-yr event
Inflow = 1.85 cfs @ 12.04 hrs, Volume= 0.116 af
Primary = 1.85 cfs @ 12.04 hrs, Volume= 0.116 af, Atten= 0%, Lag= 0.0 min
Routed to Reach SP1 : SACO RIVER / OCEAN

Primary outflow = Inflow, Time Span= 5.00-20.00 hrs, dt= 0.05 hrs

Link DP1: DP1

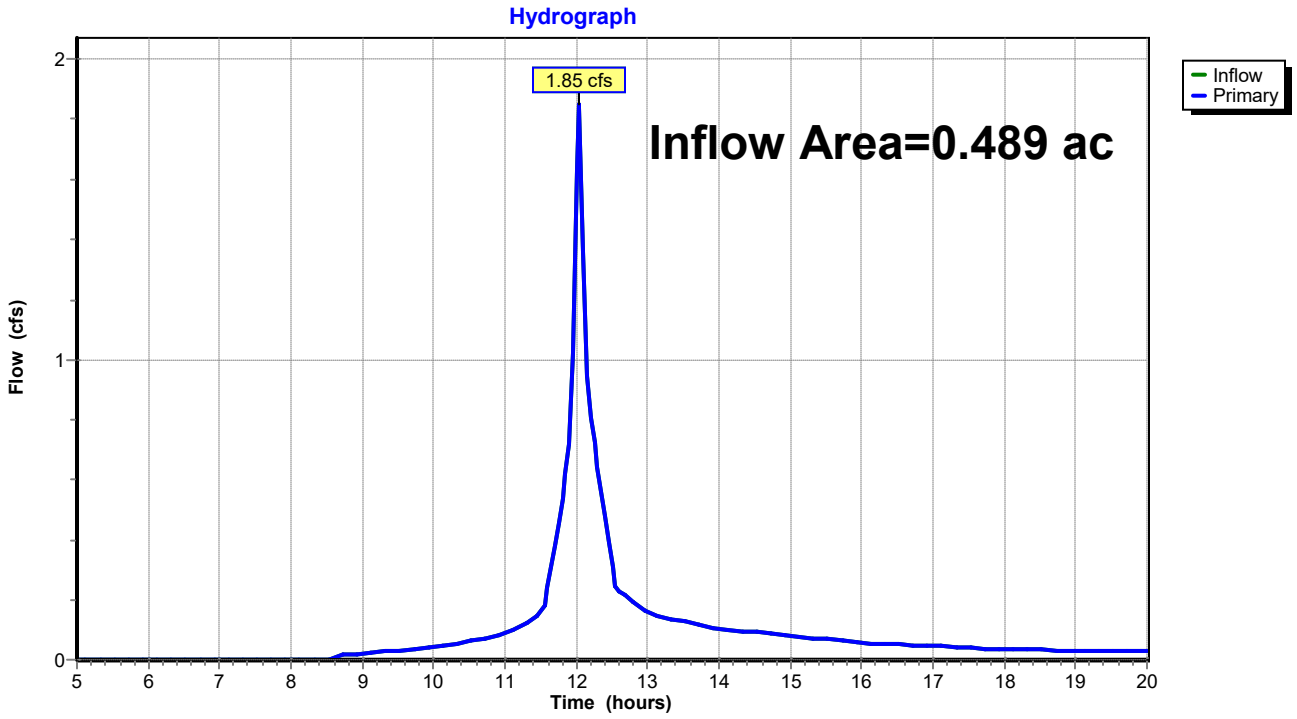

Summary for Link DP2: DP2

Inflow Area = 0.709 ac, 15.44% Impervious, Inflow Depth > 2.67" for 10-yr event
Inflow = 2.31 cfs @ 12.11 hrs, Volume= 0.158 af
Primary = 2.31 cfs @ 12.11 hrs, Volume= 0.158 af, Atten= 0%, Lag= 0.0 min
Routed to Reach SP1 : SACO RIVER / OCEAN

Primary outflow = Inflow, Time Span= 5.00-20.00 hrs, dt= 0.05 hrs

Link DP2: DP2

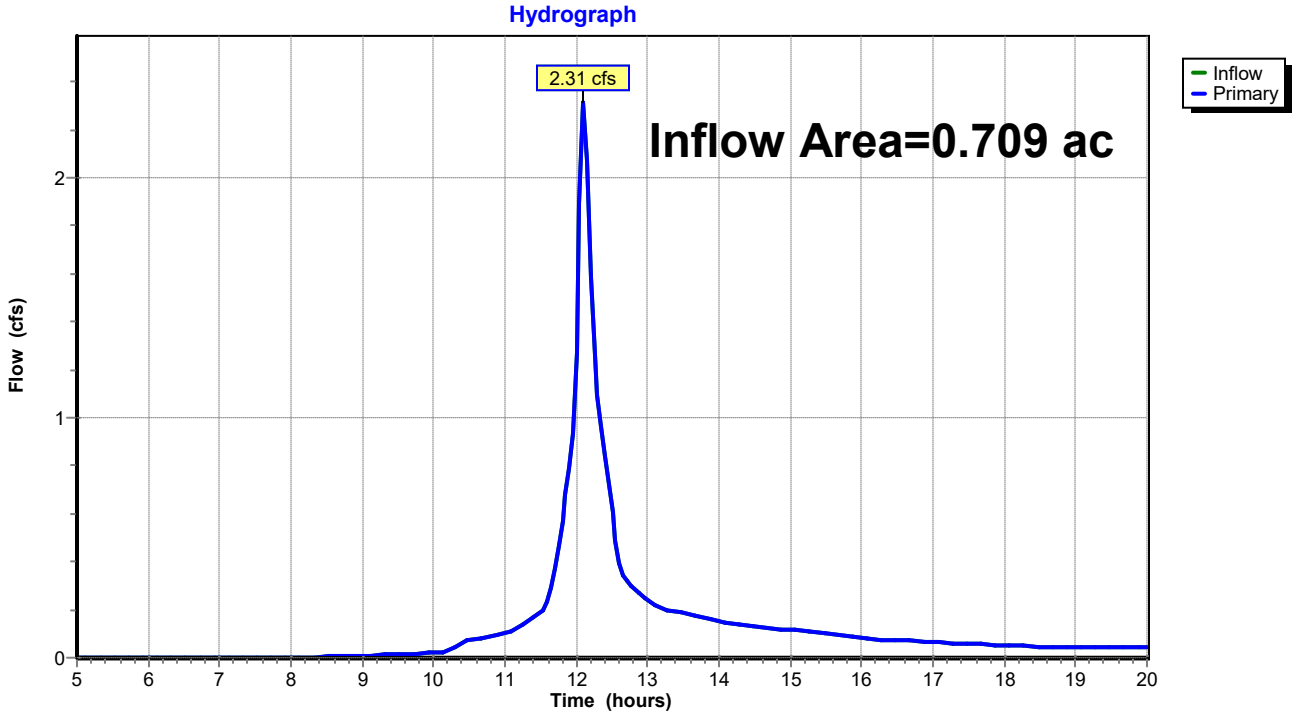

Time span=5.00-20.00 hrs, dt=0.05 hrs, 301 points
Runoff by SCS TR-20 method, UH=SCS, Weighted-CN
Reach routing by Stor-Ind method - Pond routing by Stor-Ind method

Subcatchment 1S: Post Subcatchment 1 Runoff Area=9,832 sf 50.01% Impervious Runoff Depth>4.45"
Flow Length=172' Tc=0.8 min CN=87 Runoff=1.36 cfs 0.084 af

Subcatchment 2S: Post Subcatchment 2 Runoff Area=11,488 sf 10.78% Impervious Runoff Depth>3.62"
Flow Length=133' Tc=3.4 min CN=79 Runoff=1.28 cfs 0.080 af

Subcatchment 3S: Post Subcatchment 3 Runoff Area=13,365 sf 33.49% Impervious Runoff Depth>4.13"
Flow Length=262' Tc=4.9 min CN=84 Runoff=1.57 cfs 0.106 af

Subcatchment 4S: Post Subcatchment 4 Runoff Area=17,529 sf 1.68% Impervious Runoff Depth>3.61"
Flow Length=126' Tc=7.2 min CN=79 Runoff=1.72 cfs 0.121 af

Subcatchment 5S: Post Subcatchment 5 Runoff Area=59,179 sf 4.06% Impervious Runoff Depth>3.72"
Flow Length=445' Tc=7.0 min CN=80 Runoff=5.99 cfs 0.421 af

Reach 1R: Reach 1 Inflow=1.33 cfs 0.082 af
Outflow=1.33 cfs 0.082 af

Reach 2R: Reach 2 Inflow=1.50 cfs 0.102 af
Outflow=1.50 cfs 0.102 af

Reach DP3: Shoreline 3 Inflow=5.99 cfs 0.421 af
Outflow=5.99 cfs 0.421 af

Reach SP1: SACO RIVER / OCEAN Inflow=11.09 cfs 0.806 af
Outflow=11.09 cfs 0.806 af

Pond 1P: Bioretention Filter Cell 1 Peak Elev=18.20' Storage=101 cf Inflow=1.36 cfs 0.084 af
Outflow=1.33 cfs 0.082 af

Pond 2P: CB-1 Peak Elev=14.38' Inflow=1.33 cfs 0.082 af
15.0" Round Culvert n=0.013 L=48.0' S=0.0365 '/' Outflow=1.33 cfs 0.082 af

Pond 3P: Bioretention Filter Cell 2 Peak Elev=23.72' Storage=86 cf Inflow=1.57 cfs 0.106 af
Outflow=1.56 cfs 0.105 af

Pond 4P: CB-2 Peak Elev=19.39' Inflow=1.56 cfs 0.105 af
18.0" Round Culvert n=0.013 L=40.0' S=0.0187 '/' Outflow=1.56 cfs 0.105 af

Pond 5P: Level Lip Speader Peak Elev=18.00' Storage=115 cf Inflow=1.56 cfs 0.105 af
Outflow=1.50 cfs 0.102 af

Link DP1: DP1 Inflow=2.54 cfs 0.162 af
Primary=2.54 cfs 0.162 af

Link DP2: DP2 Inflow=3.22 cfs 0.223 af
Primary=3.22 cfs 0.223 af

Total Runoff Area = 2.557 ac Runoff Volume = 0.811 af Average Runoff Depth = 3.80"
88.04% Pervious = 2.251 ac 11.96% Impervious = 0.306 ac

Summary for Subcatchment 1S: Post Subcatchment 1

Runoff = 1.36 cfs @ 12.01 hrs, Volume= 0.084 af, Depth> 4.45"
Routed to Pond 1P : Bioretention Filter Cell 1

Runoff by SCS TR-20 method, UH=SCS, Weighted-CN, Time Span= 5.00-20.00 hrs, dt= 0.05 hrs
Type III 24-hr 25-yr Rainfall=6.20"

	Area (sf)	CN	Description
	3,430	77	Woods, Good, HSG D
*	982	98	Ledge, HSG D
	595	80	>75% Grass cover, Good, HSG D
*	3,935	98	Paved Access Drive, HSG D
*	890	73	Bioretention Filter Cell, Good, HSG D
	9,832	87	Weighted Average
	4,915		49.99% Pervious Area
	4,917		50.01% Impervious Area

Tc (min)	Length (feet)	Slope (ft/ft)	Velocity (ft/sec)	Capacity (cfs)	Description
0.4	46	0.0500	1.73		**Sheet Flow, Tc-1** Smooth surfaces n= 0.011 P2= 3.30"
0.3	102	0.0500	5.25	15.74	**Channel Flow, Tc-2** Area= 3.0 sf Perim= 9.2' r= 0.33' n= 0.030 Earth, grassed & winding
0.1	24	0.0625	3.75		**Shallow Concentrated Flow, Tc-3** Grassed Waterway Kv= 15.0 fps
0.8	172	Total			

Subcatchment 1S: Post Subcatchment 1

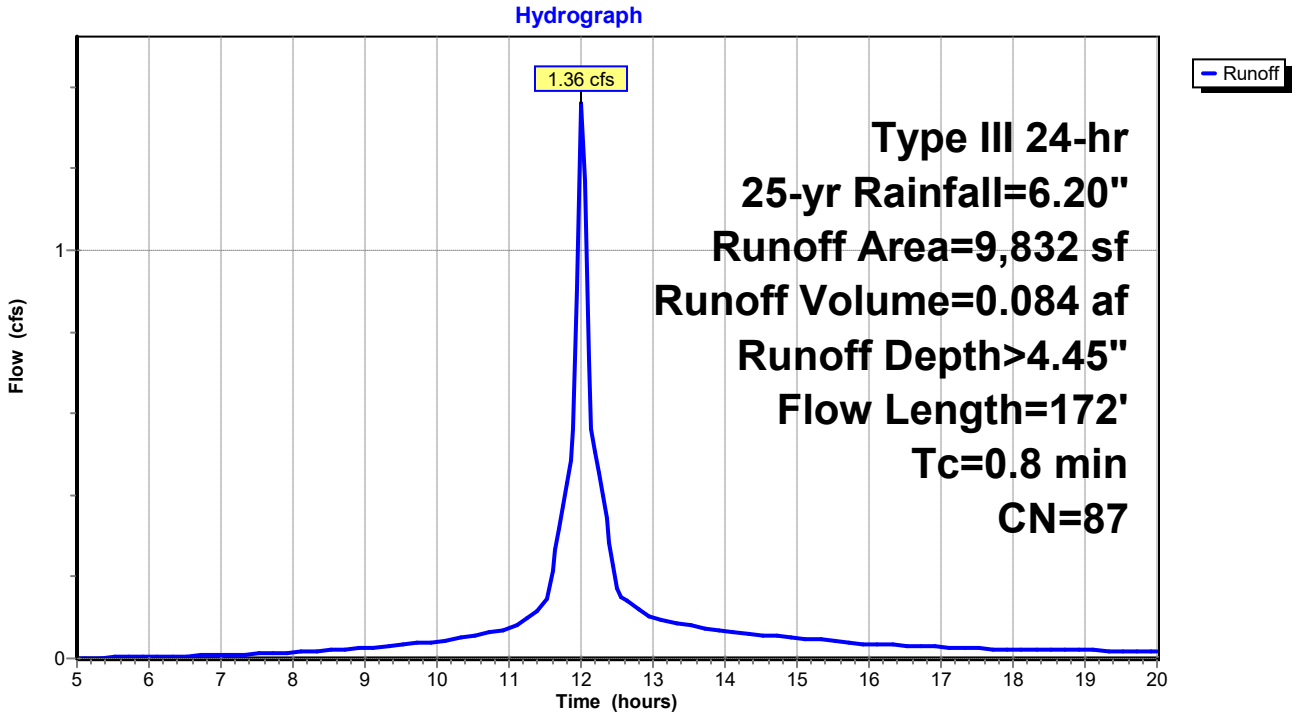

Summary for Subcatchment 2S: Post Subcatchment 2

Runoff = 1.28 cfs @ 12.05 hrs, Volume= 0.080 af, Depth> 3.62"
Routed to Link DP1 : DP1

Runoff by SCS TR-20 method, UH=SCS, Weighted-CN, Time Span= 5.00-20.00 hrs, dt= 0.05 hrs
Type III 24-hr 25-yr Rainfall=6.20"

Area (sf)	CN	Description
10,250	77	Woods, Good, HSG D
1,238	98	Paved parking, HSG D
11,488	79	Weighted Average
10,250		89.22% Pervious Area
1,238		10.78% Impervious Area

Tc (min)	Length (feet)	Slope (ft/ft)	Velocity (ft/sec)	Capacity (cfs)	Description
2.5	21	0.1905	0.14		**Sheet Flow, Tc-1** Woods: Light underbrush n= 0.400 P2= 3.30"
0.9	112	0.1696	2.06		**Shallow Concentrated Flow, Tc-2** Woodland Kv= 5.0 fps
3.4	133	Total			

Subcatchment 2S: Post Subcatchment 2

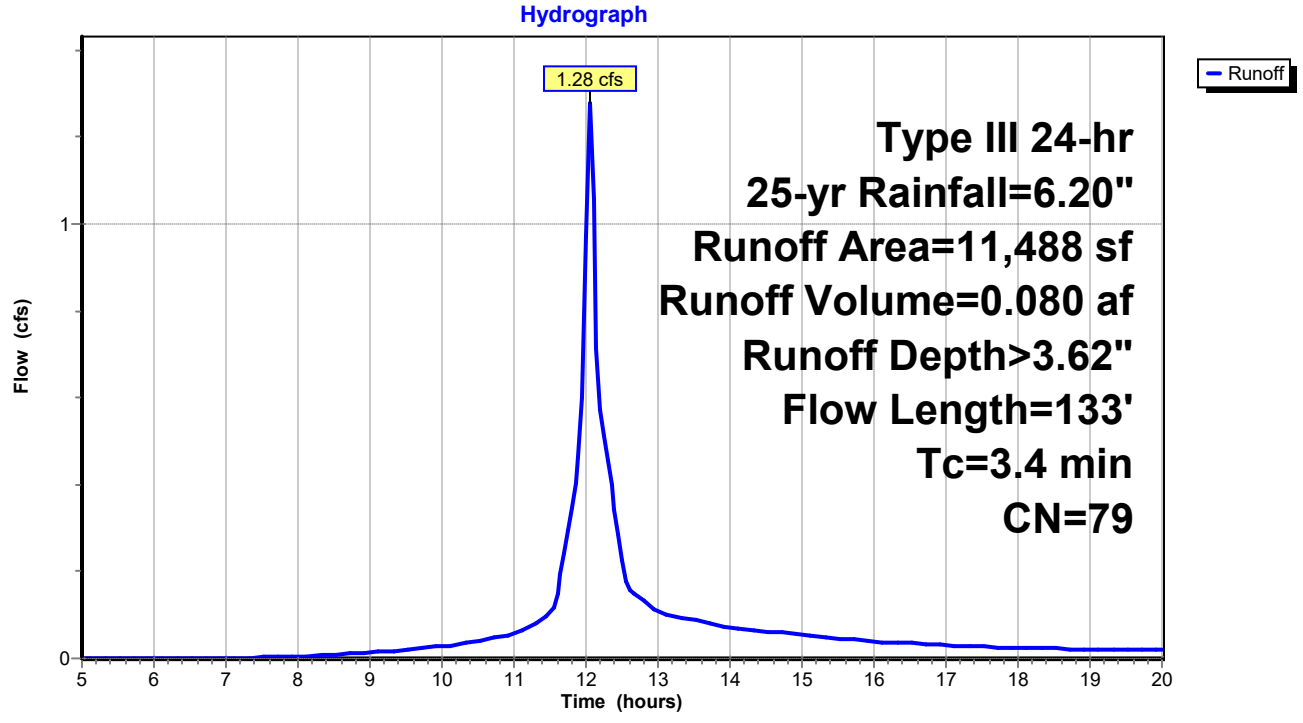

Summary for Subcatchment 3S: Post Subcatchment 3

Runoff = 1.57 cfs @ 12.07 hrs, Volume= 0.106 af, Depth> 4.13"
Routed to Pond 3P : Bioretention Filter Cell 2

Runoff by SCS TR-20 method, UH=SCS, Weighted-CN, Time Span= 5.00-20.00 hrs, dt= 0.05 hrs
Type III 24-hr 25-yr Rainfall=6.20"

	Area (sf)	CN	Description
	6,822	77	Woods, Good, HSG D
*	580	73	Biofiltration cell, Good, HSG D
*	3,768	98	Paved access drive, HSG D
	1,487	80	>75% Grass cover, Good, HSG D
*	708	98	Ledge, HSG D
	13,365	84	Weighted Average
	8,889		66.51% Pervious Area
	4,476		33.49% Impervious Area

Tc (min)	Length (feet)	Slope (ft/ft)	Velocity (ft/sec)	Capacity (cfs)	Description
4.2	43	0.2093	0.17		**Sheet Flow, Tc-1** Woods: Light underbrush n= 0.400 P2= 3.30"
0.7	214	0.0500	5.25	15.74	**Channel Flow, Tc-2** Area= 3.0 sf Perim= 9.2' r= 0.33' n= 0.030 Earth, grassed & winding
0.0	5	0.0500	3.35		**Shallow Concentrated Flow, Tc-3** Grassed Waterway Kv= 15.0 fps
4.9	262	Total			

Subcatchment 3S: Post Subcatchment 3

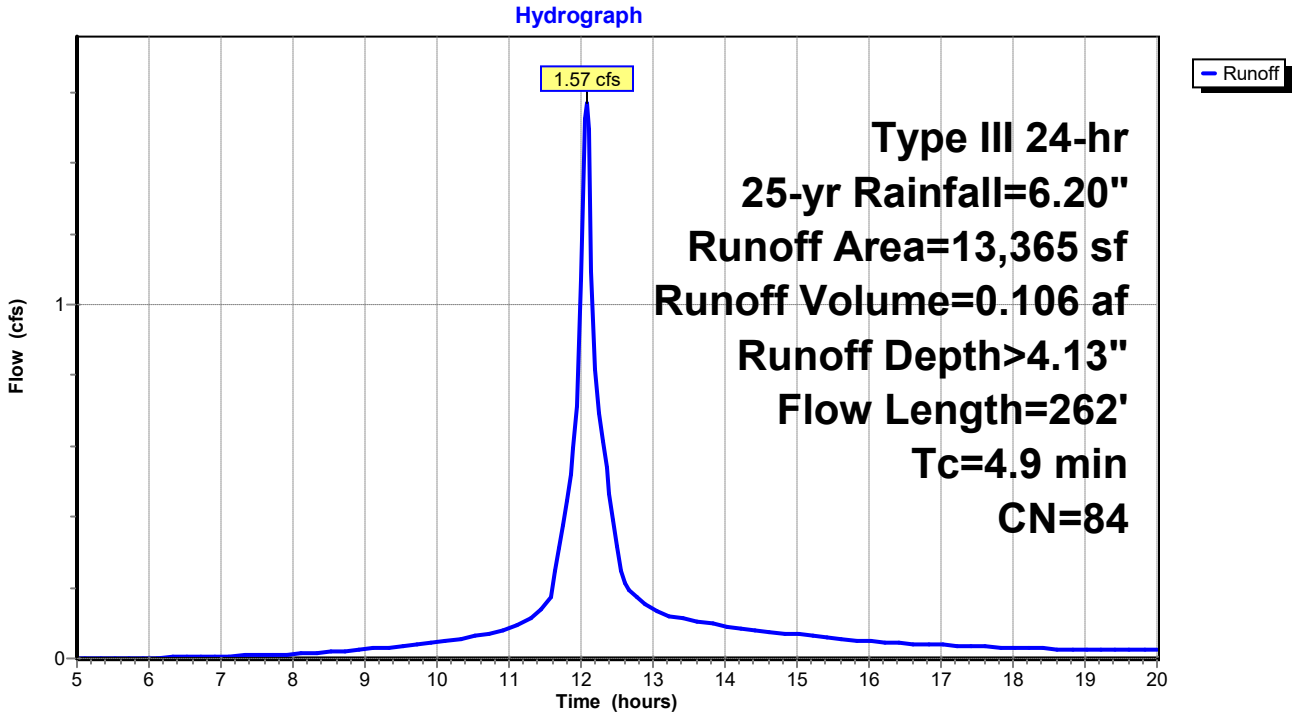

Summary for Subcatchment 4S: Post Subcatchment 4

Runoff = 1.72 cfs @ 12.11 hrs, Volume= 0.121 af, Depth> 3.61"
Routed to Link DP2 : DP2

Runoff by SCS TR-20 method, UH=SCS, Weighted-CN, Time Span= 5.00-20.00 hrs, dt= 0.05 hrs
Type III 24-hr 25-yr Rainfall=6.20"

	Area (sf)	CN	Description
*	295	98	Paved access drive, HSG D
	1,450	80	>75% Grass cover, Good, HSG D
	15,784	79	Woods, Fair, HSG D
	17,529	79	Weighted Average
	17,234		98.32% Pervious Area
	295		1.68% Impervious Area

Tc (min)	Length (feet)	Slope (ft/ft)	Velocity (ft/sec)	Capacity (cfs)	Description
6.8	62	0.1290	0.15		**Sheet Flow, Tc-1** Woods: Light underbrush n= 0.400 P2= 3.30"
0.4	64	0.2343	2.42		**Shallow Concentrated Flow, Tc-2** Woodland Kv= 5.0 fps
7.2	126	Total			

Subcatchment 4S: Post Subcatchment 4

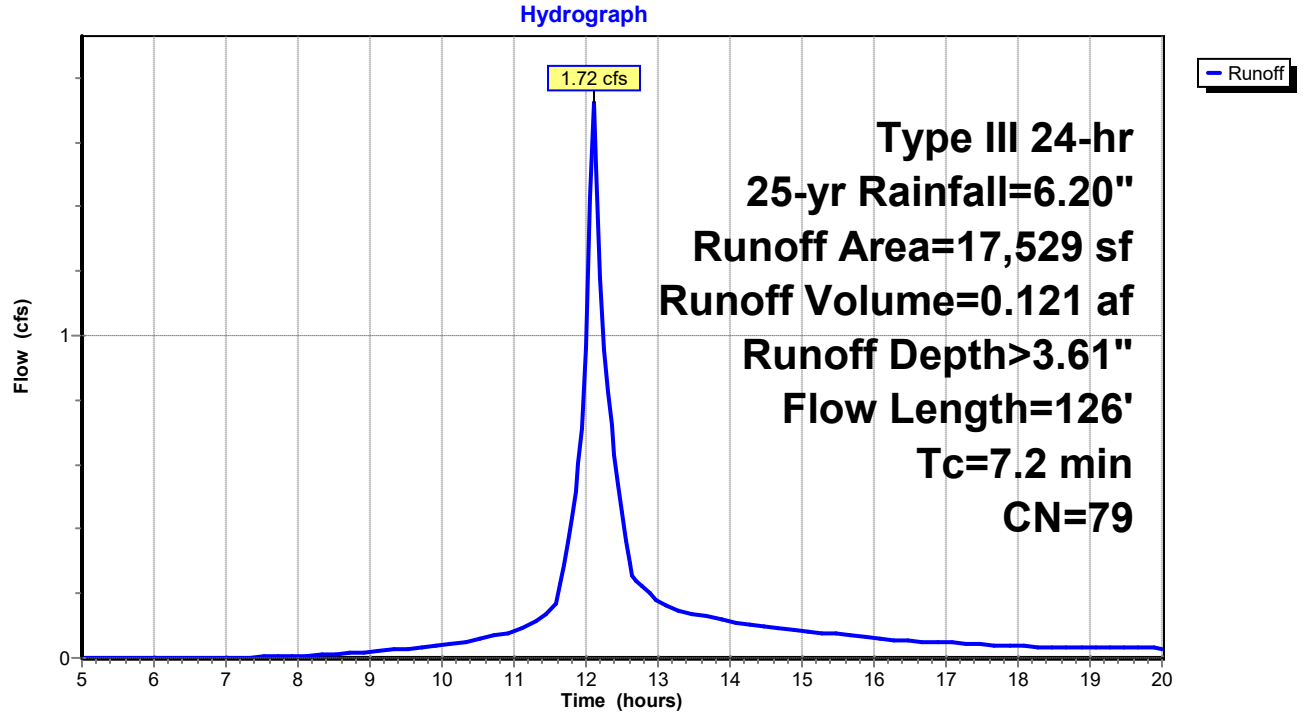

Summary for Subcatchment 5S: Post Subcatchment 5

Runoff = 5.99 cfs @ 12.10 hrs, Volume= 0.421 af, Depth> 3.72"
Routed to Reach DP3 : Shoreline 3

Runoff by SCS TR-20 method, UH=SCS, Weighted-CN, Time Span= 5.00-20.00 hrs, dt= 0.05 hrs
Type III 24-hr 25-yr Rainfall=6.20"

	Area (sf)	CN	Description
*	1,650	98	Paved acccess drive, HSG D
	751	98	Roofs, HSG D
*	6,955	88	Sand beach, HSG D
	3,872	96	Gravel surface, HSG D
	45,951	77	Woods, Good, HSG D
	59,179	80	Weighted Average
	56,778		95.94% Pervious Area
	2,401		4.06% Impervious Area

Tc (min)	Length (feet)	Slope (ft/ft)	Velocity (ft/sec)	Capacity (cfs)	Description
2.7	23	0.1740	0.14		**Sheet Flow, Tc-1** Woods: Light underbrush n= 0.400 P2= 3.30"
1.0	70	0.0574	1.20		**Shallow Concentrated Flow, Tc-2** Woodland Kv= 5.0 fps
0.5	170	0.1059	5.24		**Shallow Concentrated Flow, Tc-3** Unpaved Kv= 16.1 fps
2.5	140	0.0357	0.94		**Shallow Concentrated Flow, Tc-4** Woodland Kv= 5.0 fps
0.3	42	0.0714	2.67		**Shallow Concentrated Flow, Tc-5** Nearly Bare & Untilled Kv= 10.0 fps
7.0	445	Total			

Subcatchment 5S: Post Subcatchment 5

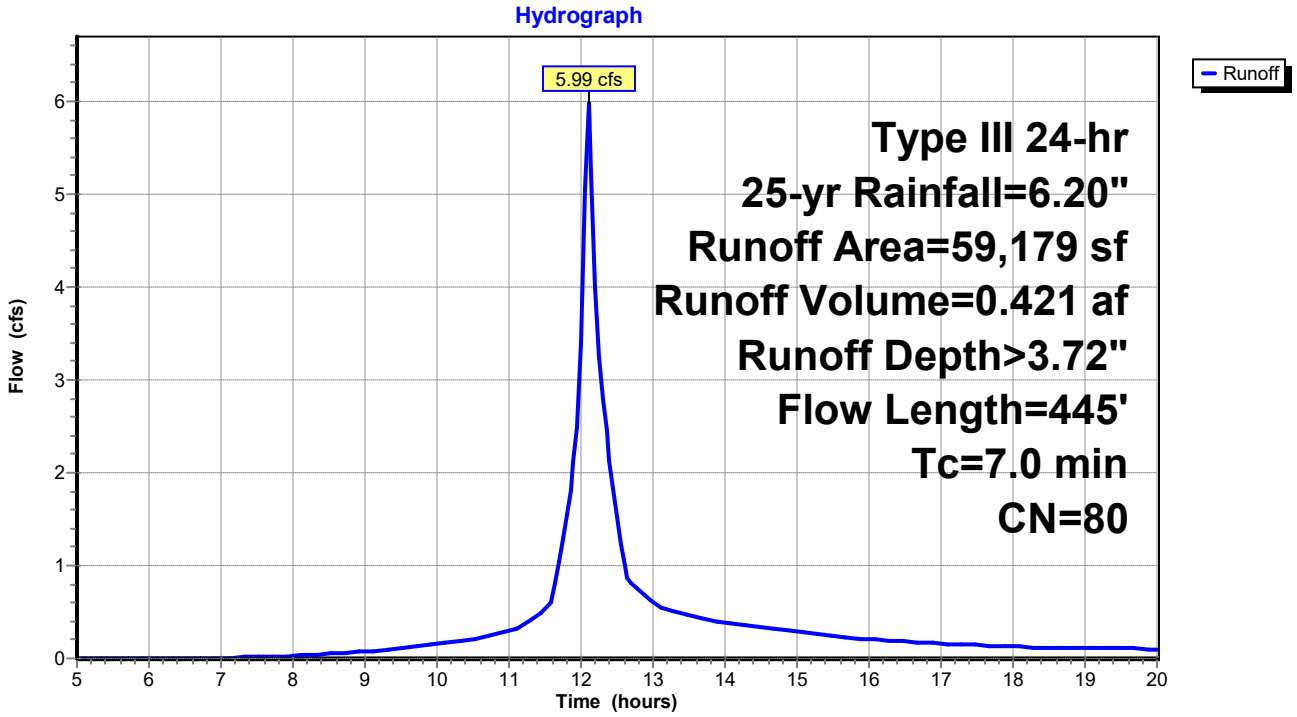

Summary for Reach 1R: Reach 1

Inflow Area = 0.226 ac, 50.01% Impervious, Inflow Depth > 4.39" for 25-yr event
Inflow = 1.33 cfs @ 12.02 hrs, Volume= 0.082 af
Outflow = 1.33 cfs @ 12.02 hrs, Volume= 0.082 af, Atten= 0%, Lag= 0.0 min
Routed to Link DP1 : DP1

Routing by Stor-Ind method, Time Span= 5.00-20.00 hrs, dt= 0.05 hrs

Reach 1R: Reach 1

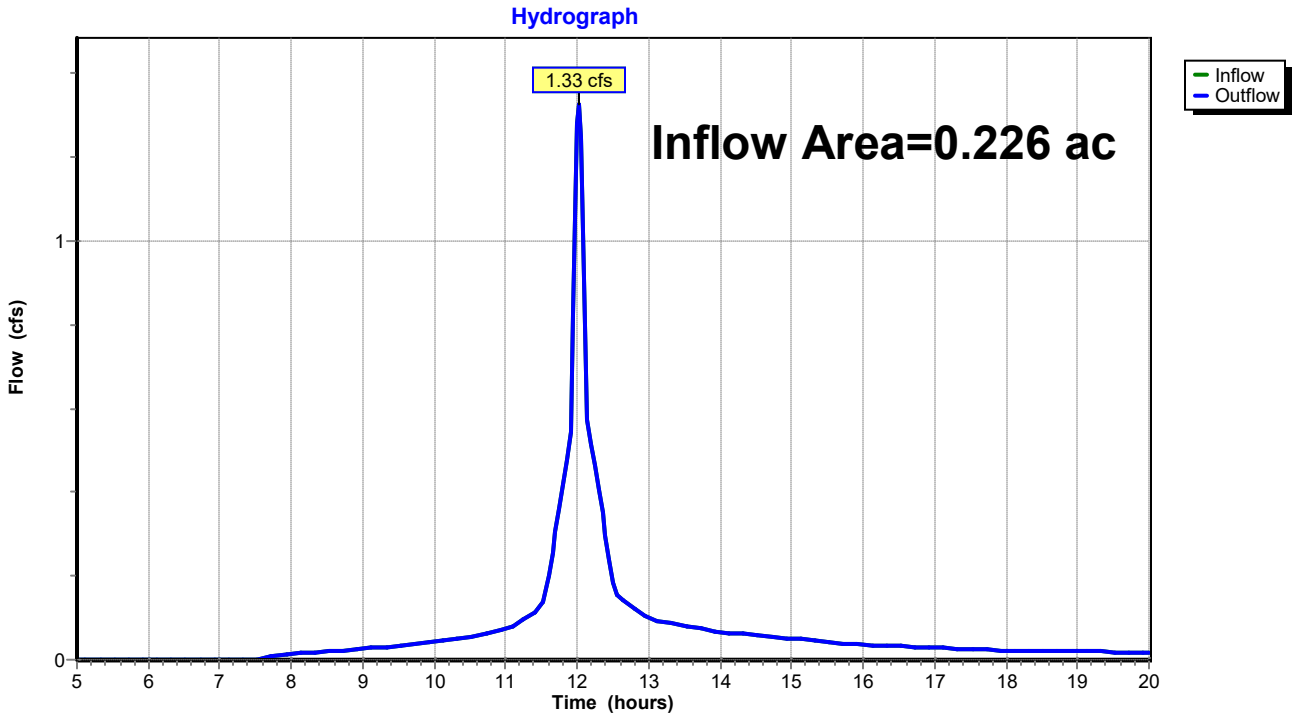

Summary for Reach 2R: Reach 2

Inflow Area = 0.307 ac, 33.49% Impervious, Inflow Depth > 3.99" for 25-yr event
Inflow = 1.50 cfs @ 12.11 hrs, Volume= 0.102 af
Outflow = 1.50 cfs @ 12.11 hrs, Volume= 0.102 af, Atten= 0%, Lag= 0.0 min
Routed to Link DP2 : DP2

Routing by Stor-Ind method, Time Span= 5.00-20.00 hrs, dt= 0.05 hrs

Reach 2R: Reach 2

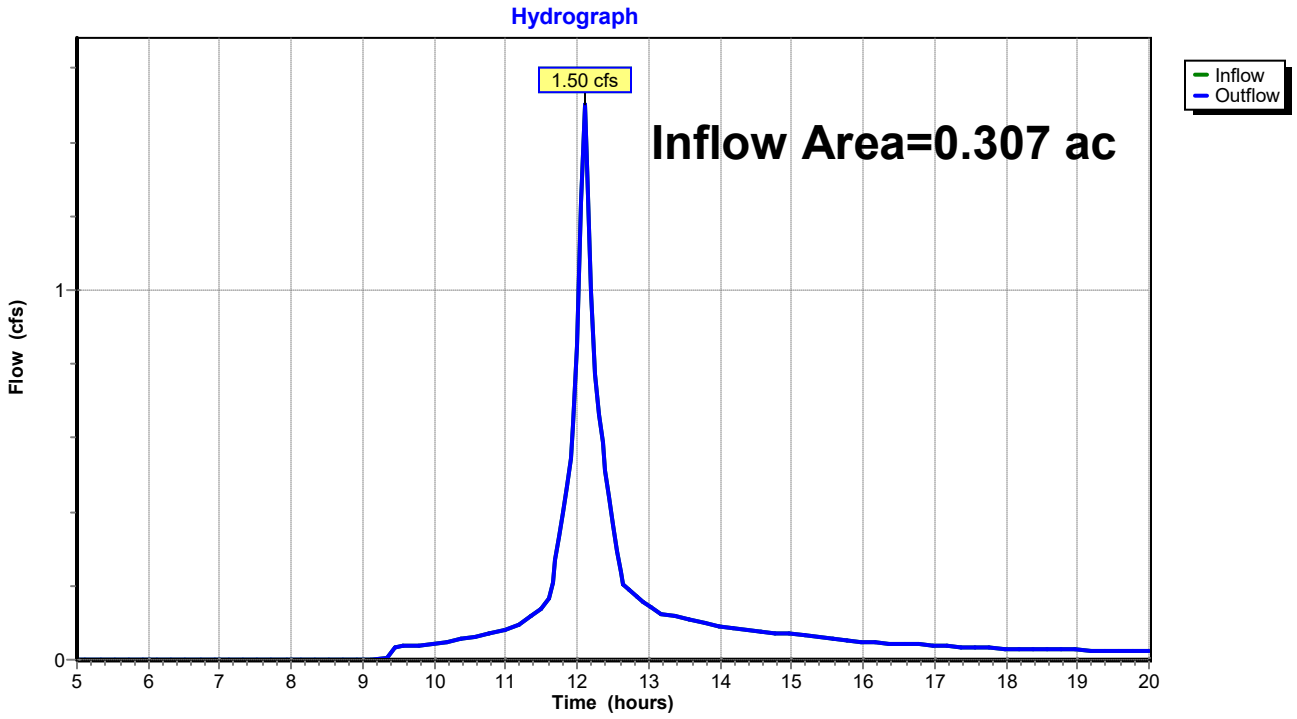

Summary for Reach DP3: Shoreline 3

Inflow Area = 1.359 ac, 4.06% Impervious, Inflow Depth > 3.72" for 25-yr event
Inflow = 5.99 cfs @ 12.10 hrs, Volume= 0.421 af
Outflow = 5.99 cfs @ 12.10 hrs, Volume= 0.421 af, Atten= 0%, Lag= 0.0 min
Routed to Reach SP1 : SACO RIVER / OCEAN

Routing by Stor-Ind method, Time Span= 5.00-20.00 hrs, dt= 0.05 hrs

Reach DP3: Shoreline 3

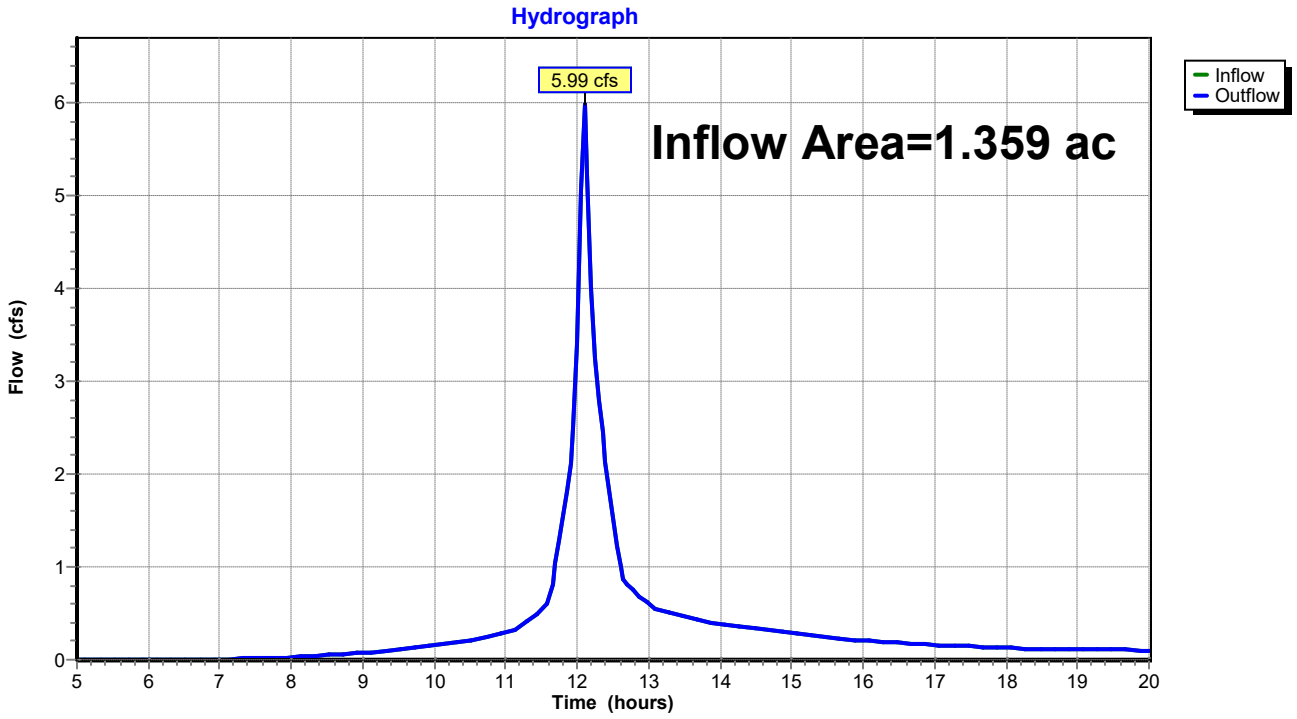

Summary for Reach SP1: SACO RIVER / OCEAN

Inflow Area = 2.557 ac, 11.96% Impervious, Inflow Depth > 3.78" for 25-yr event
Inflow = 11.09 cfs @ 12.09 hrs, Volume= 0.806 af
Outflow = 11.09 cfs @ 12.09 hrs, Volume= 0.806 af, Atten= 0%, Lag= 0.0 min

Routing by Stor-Ind method, Time Span= 5.00-20.00 hrs, dt= 0.05 hrs

Reach SP1: SACO RIVER / OCEAN

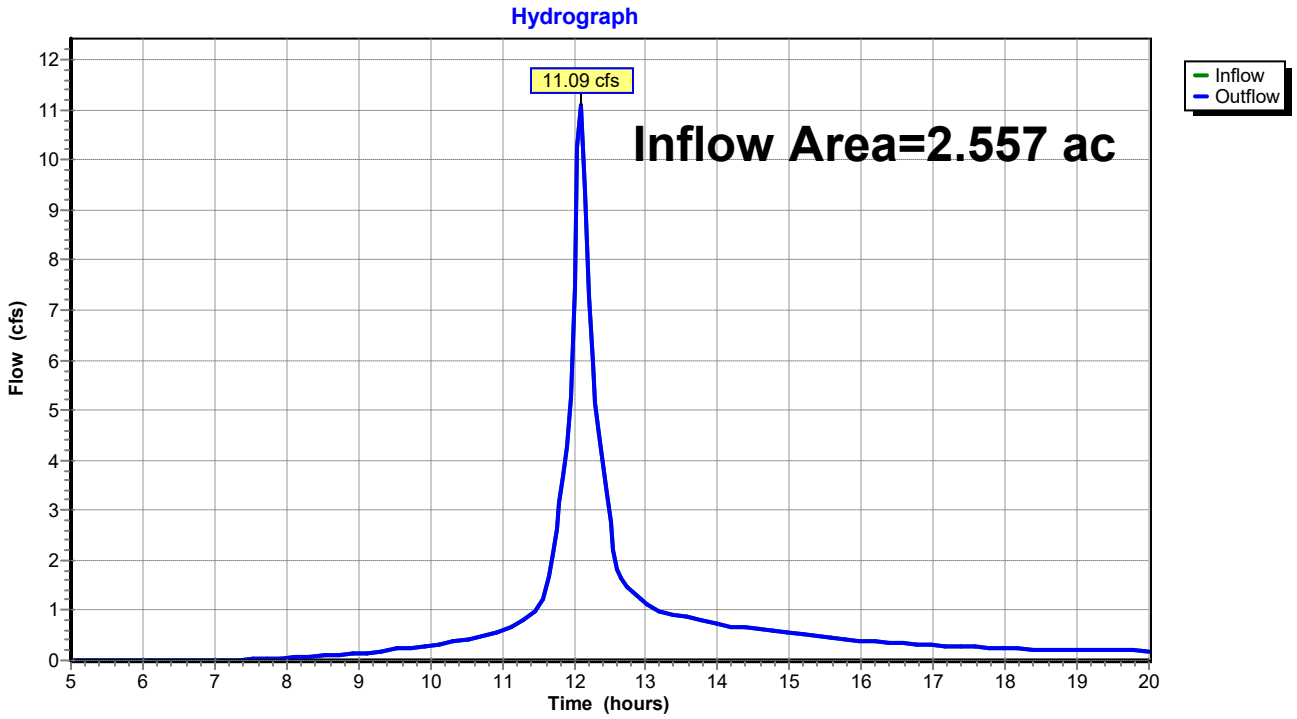

Summary for Pond 1P: Bioretention Filter Cell 1

Inflow Area = 0.226 ac, 50.01% Impervious, Inflow Depth > 4.45" for 25-yr event
Inflow = 1.36 cfs @ 12.01 hrs, Volume= 0.084 af
Outflow = 1.33 cfs @ 12.02 hrs, Volume= 0.082 af, Atten= 2%, Lag= 0.6 min
Primary = 1.33 cfs @ 12.02 hrs, Volume= 0.082 af
Routed to Pond 2P : CB-1

Routing by Stor-Ind method, Time Span= 5.00-20.00 hrs, dt= 0.05 hrs
Peak Elev= 18.20' @ 12.02 hrs Surf.Area= 275 sf Storage= 101 cf

Plug-Flow detention time= 12.6 min calculated for 0.082 af (98% of inflow)
Center-of-Mass det. time= 6.1 min (765.1 - 758.9)

Volume	Invert	Avail.Storage	Storage Description
#1	17.50'	200 cf	**Custom Stage Data (Prismatic)** Listed below (Recalc)

Elevation (feet)	Surf.Area (sq-ft)	Inc.Store (cubic-feet)	Cum.Store (cubic-feet)
17.50	0	0	0
18.00	213	53	53
18.50	372	146	200

Device	Routing	Invert	Outlet Devices
#1	Primary	18.00'	**18.0" Horiz. Orifice/Grate** C= 0.600 in 24.0" Grate (56% open area) Limited to weir flow at low heads

Primary OutFlow Max=1.27 cfs @ 12.02 hrs HW=18.19' (Free Discharge)
↑—**1=Orifice/Grate** (Weir Controls 1.27 cfs @ 1.42 fps)

Pond 1P: Bioretention Filter Cell 1

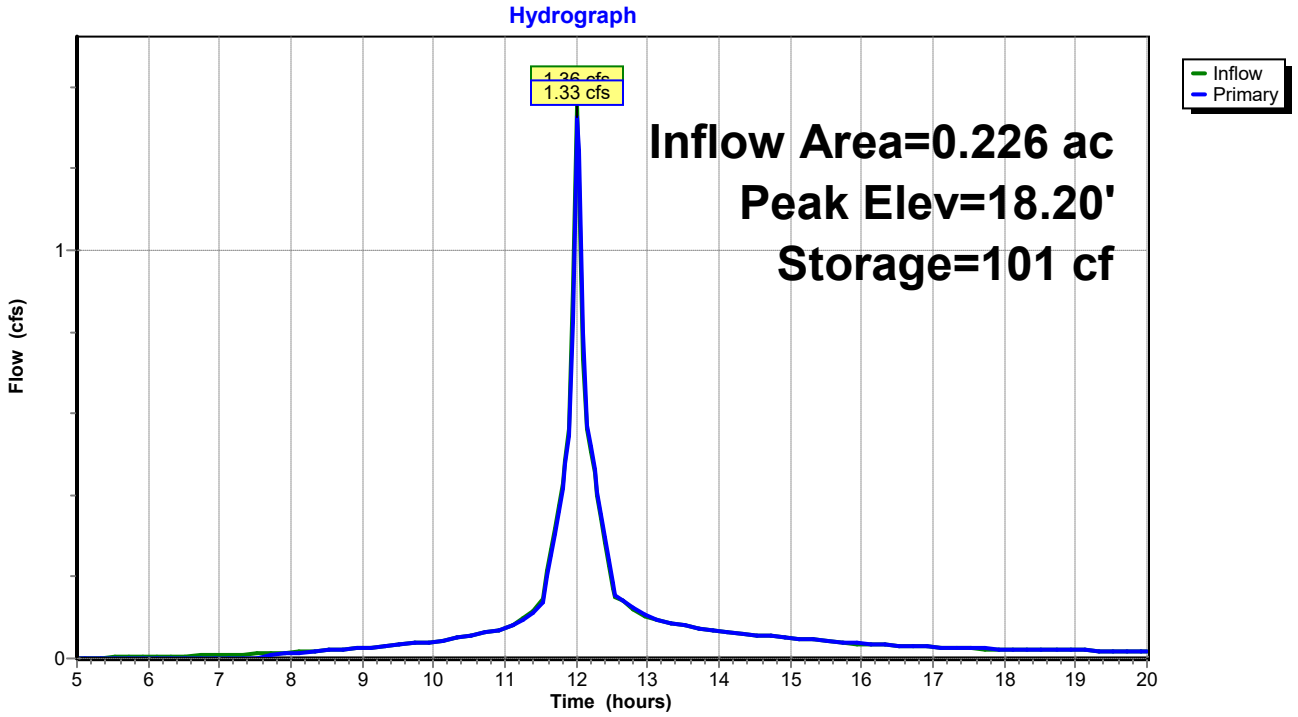

Summary for Pond 2P: CB-1

Inflow Area = 0.226 ac, 50.01% Impervious, Inflow Depth > 4.39" for 25-yr event
Inflow = 1.33 cfs @ 12.02 hrs, Volume= 0.082 af
Outflow = 1.33 cfs @ 12.02 hrs, Volume= 0.082 af, Atten= 0%, Lag= 0.0 min
Primary = 1.33 cfs @ 12.02 hrs, Volume= 0.082 af
Routed to Reach 1R : Reach 1

Routing by Stor-Ind method, Time Span= 5.00-20.00 hrs, dt= 0.05 hrs
Peak Elev= 14.38' @ 12.02 hrs

Device	Routing	Invert	Outlet Devices
#1	Primary	13.75'	**15.0" Round Culvert** L= 48.0' CPP, projecting, no headwall, Ke= 0.900 Inlet / Outlet Invert= 13.75' / 12.00' S= 0.0365 '/' Cc= 0.900 n= 0.013 Corrugated PE, smooth interior, Flow Area= 1.23 sf

Primary OutFlow Max=1.27 cfs @ 12.02 hrs HW=14.36' (Free Discharge)
1=Culvert (Inlet Controls 1.27 cfs @ 2.11 fps)

Pond 2P: CB-1

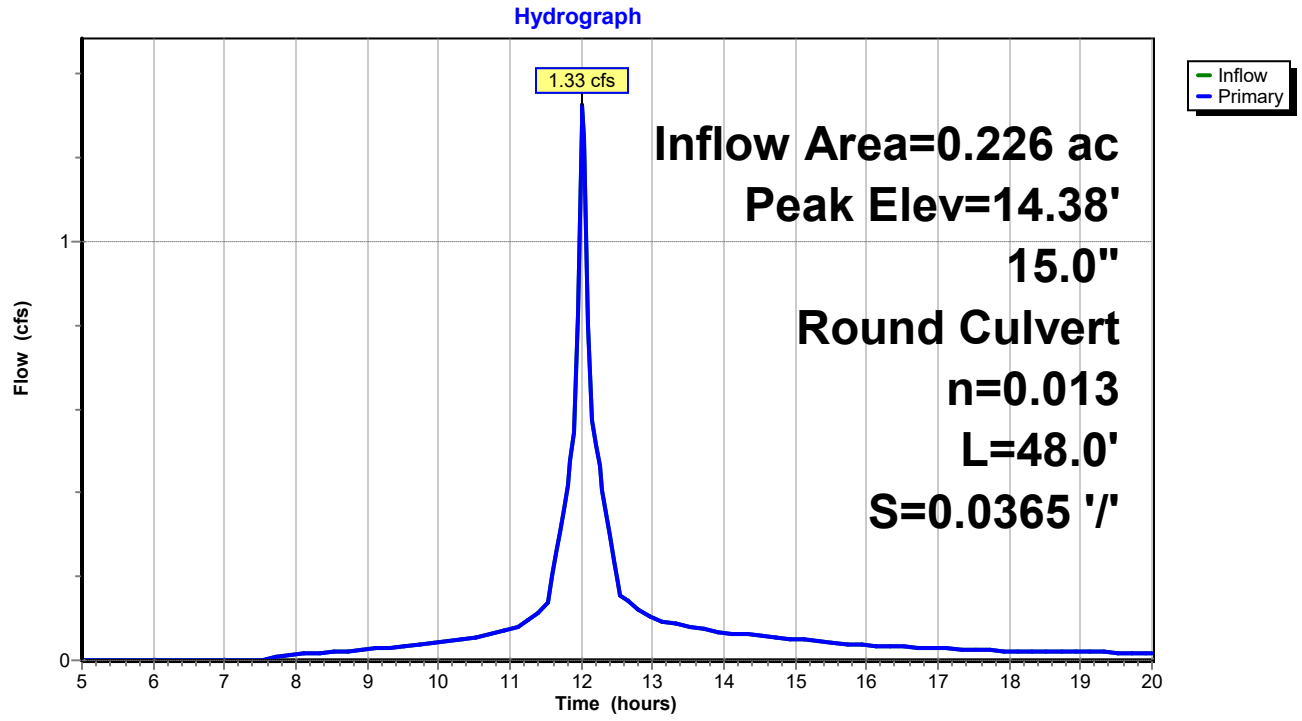

Summary for Pond 3P: Bioretention Filter Cell 2

Inflow Area = 0.307 ac, 33.49% Impervious, Inflow Depth > 4.13" for 25-yr event
Inflow = 1.57 cfs @ 12.07 hrs, Volume= 0.106 af
Outflow = 1.56 cfs @ 12.08 hrs, Volume= 0.105 af, Atten= 1%, Lag= 0.6 min
Primary = 1.56 cfs @ 12.08 hrs, Volume= 0.105 af
Routed to Pond 4P : CB-2

Routing by Stor-Ind method, Time Span= 5.00-20.00 hrs, dt= 0.05 hrs
Peak Elev= 23.72' @ 12.08 hrs Surf.Area= 240 sf Storage= 86 cf

Plug-Flow detention time= 7.6 min calculated for 0.104 af (99% of inflow)
Center-of-Mass det. time= 3.8 min (773.5 - 769.7)

Volume	Invert	Avail.Storage	Storage Description
#1	23.00'	380 cf	**Custom Stage Data (Prismatic)** Listed below (Recalc)

Elevation (feet)	Surf.Area (sq-ft)	Inc.Store (cubic-feet)	Cum.Store (cubic-feet)
23.00	0	0	0
24.00	335	168	168
24.50	515	213	380

Device	Routing	Invert	Outlet Devices
#1	Primary	23.50'	**18.0" Horiz. Orifice/Grate** C= 0.600 in 24.0" Grate (56% open area) Limited to weir flow at low heads

Primary OutFlow Max=1.51 cfs @ 12.08 hrs HW=23.71' (Free Discharge)
↑**1=Orifice/Grate** (Weir Controls 1.51 cfs @ 1.51 fps)

Pond 3P: Bioretention Filter Cell 2

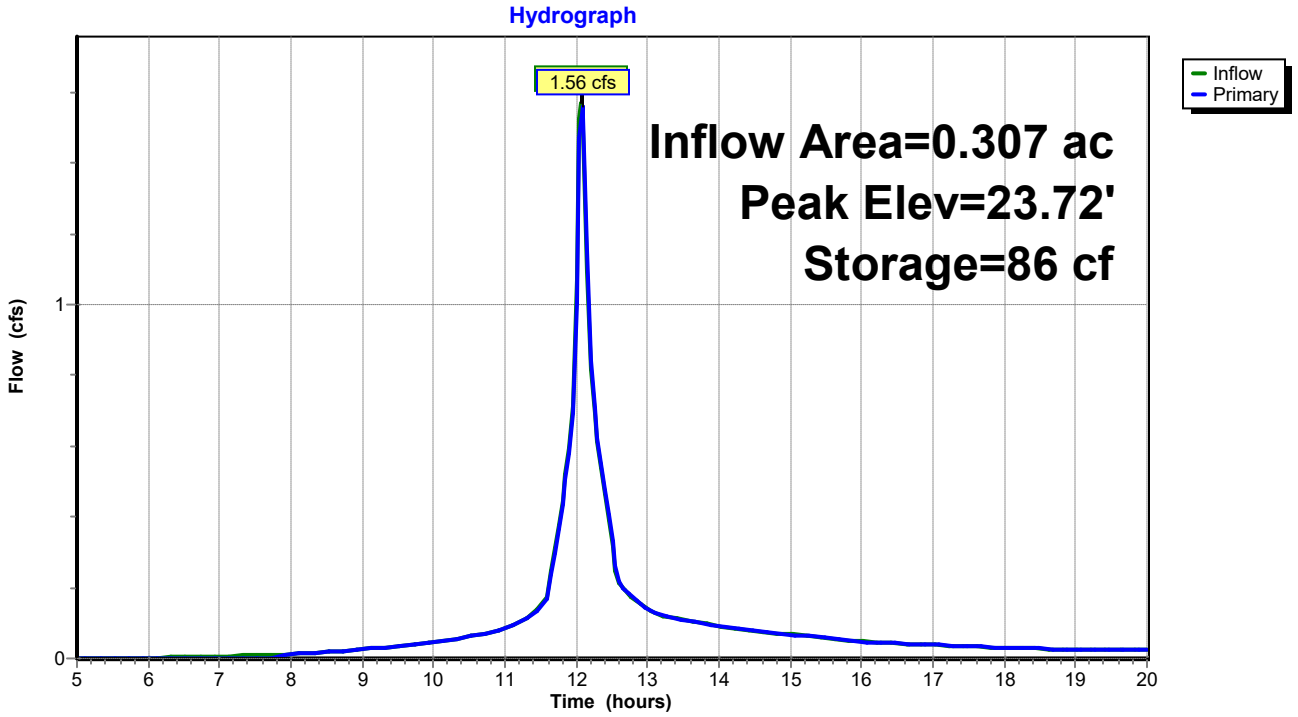

Summary for Pond 4P: CB-2

Inflow Area = 0.307 ac, 33.49% Impervious, Inflow Depth > 4.09" for 25-yr event
Inflow = 1.56 cfs @ 12.08 hrs, Volume= 0.105 af
Outflow = 1.56 cfs @ 12.08 hrs, Volume= 0.105 af, Atten= 0%, Lag= 0.0 min
Primary = 1.56 cfs @ 12.08 hrs, Volume= 0.105 af
Routed to Pond 5P : Level Lip Speader

Routing by Stor-Ind method, Time Span= 5.00-20.00 hrs, dt= 0.05 hrs
Peak Elev= 19.39' @ 12.08 hrs

Device	Routing	Invert	Outlet Devices
#1	Primary	18.75'	**18.0" Round Culvert** L= 40.0' CPP, projecting, no headwall, Ke= 0.900 Inlet / Outlet Invert= 18.75' / 18.00' S= 0.0187 '/' Cc= 0.900 n= 0.013 Corrugated PE, smooth interior, Flow Area= 1.77 sf

Primary OutFlow Max=1.51 cfs @ 12.08 hrs HW=19.38' (Free Discharge)
1=Culvert (Inlet Controls 1.51 cfs @ 2.13 fps)

Pond 4P: CB-2

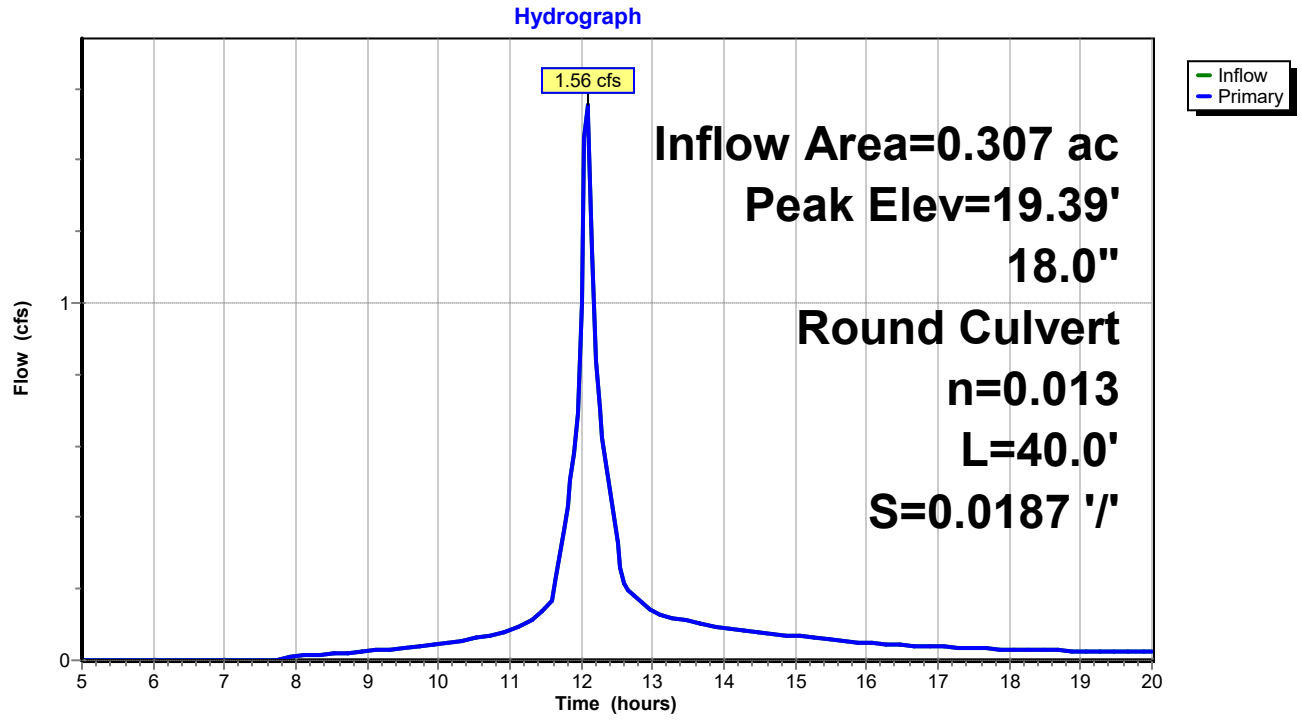

Summary for Pond 5P: Level Lip Speader

Inflow Area = 0.307 ac, 33.49% Impervious, Inflow Depth > 4.09" for 25-yr event
Inflow = 1.56 cfs @ 12.08 hrs, Volume= 0.105 af
Outflow = 1.50 cfs @ 12.11 hrs, Volume= 0.102 af, Atten= 4%, Lag= 1.4 min
Primary = 1.50 cfs @ 12.11 hrs, Volume= 0.102 af
Routed to Reach 2R : Reach 2

Routing by Stor-Ind method, Time Span= 5.00-20.00 hrs, dt= 0.05 hrs
Peak Elev= 18.00' @ 9.40 hrs Surf.Area= 168 sf Storage= 115 cf
Flood Elev= 20.00' Surf.Area= 168 sf Storage= 115 cf

Plug-Flow detention time= 17.8 min calculated for 0.102 af (97% of inflow)
Center-of-Mass det. time= 7.7 min (781.2 - 773.5)

Volume	Invert	Avail.Storage	Storage Description
#1	17.00'	115 cf	**Custom Stage Data (Prismatic)** Listed below (Recalc)

Elevation (feet)	Surf.Area (sq-ft)	Voids (%)	Inc.Store (cubic-feet)	Cum.Store (cubic-feet)
17.00	61	0.0	0	0
18.00	168	100.0	115	115

Device	Routing	Invert	Outlet Devices
#0	Primary	18.00'	**Automatic Storage Overflow** (Discharged without head)

Primary OutFlow Max=0.00 cfs @ 12.11 hrs HW=18.00' (Free Discharge)

Pond 5P: Level Lip Speader

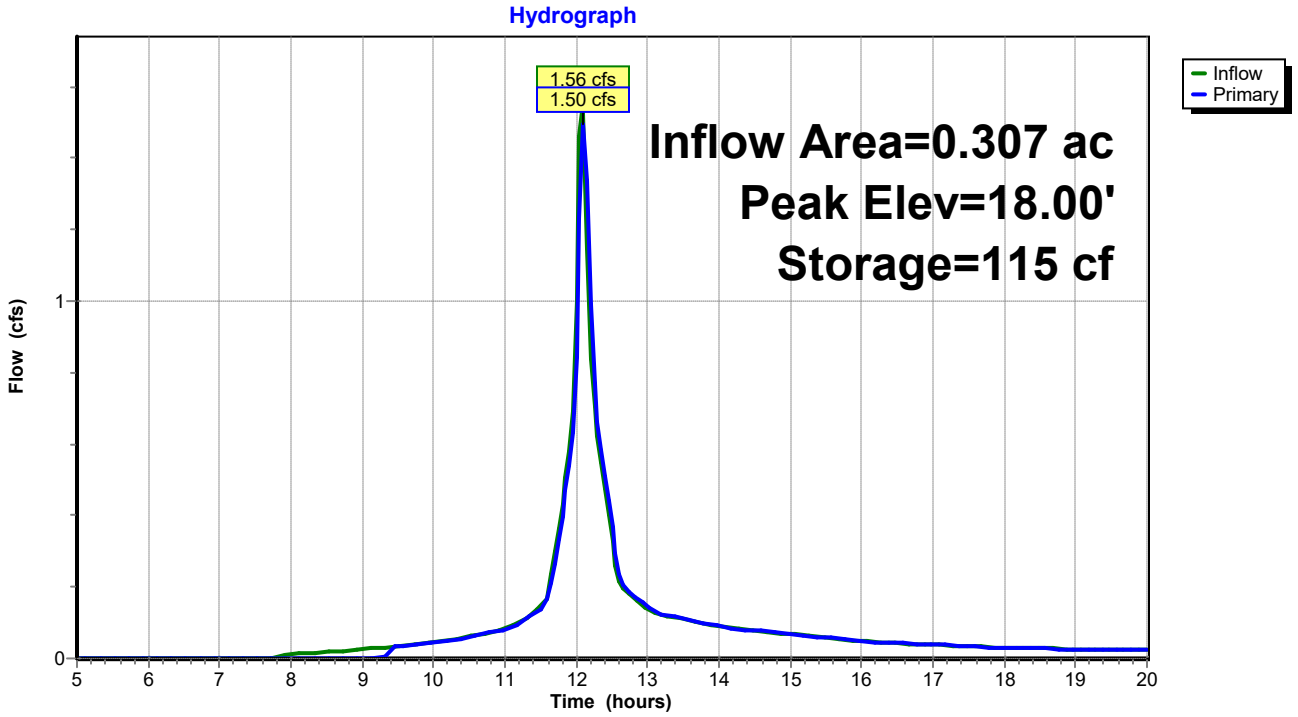

Summary for Link DP1: DP1

Inflow Area = 0.489 ac, 28.87% Impervious, Inflow Depth > 3.97" for 25-yr event
Inflow = 2.54 cfs @ 12.04 hrs, Volume= 0.162 af
Primary = 2.54 cfs @ 12.04 hrs, Volume= 0.162 af, Atten= 0%, Lag= 0.0 min
Routed to Reach SP1 : SACO RIVER / OCEAN

Primary outflow = Inflow, Time Span= 5.00-20.00 hrs, dt= 0.05 hrs

Link DP1: DP1

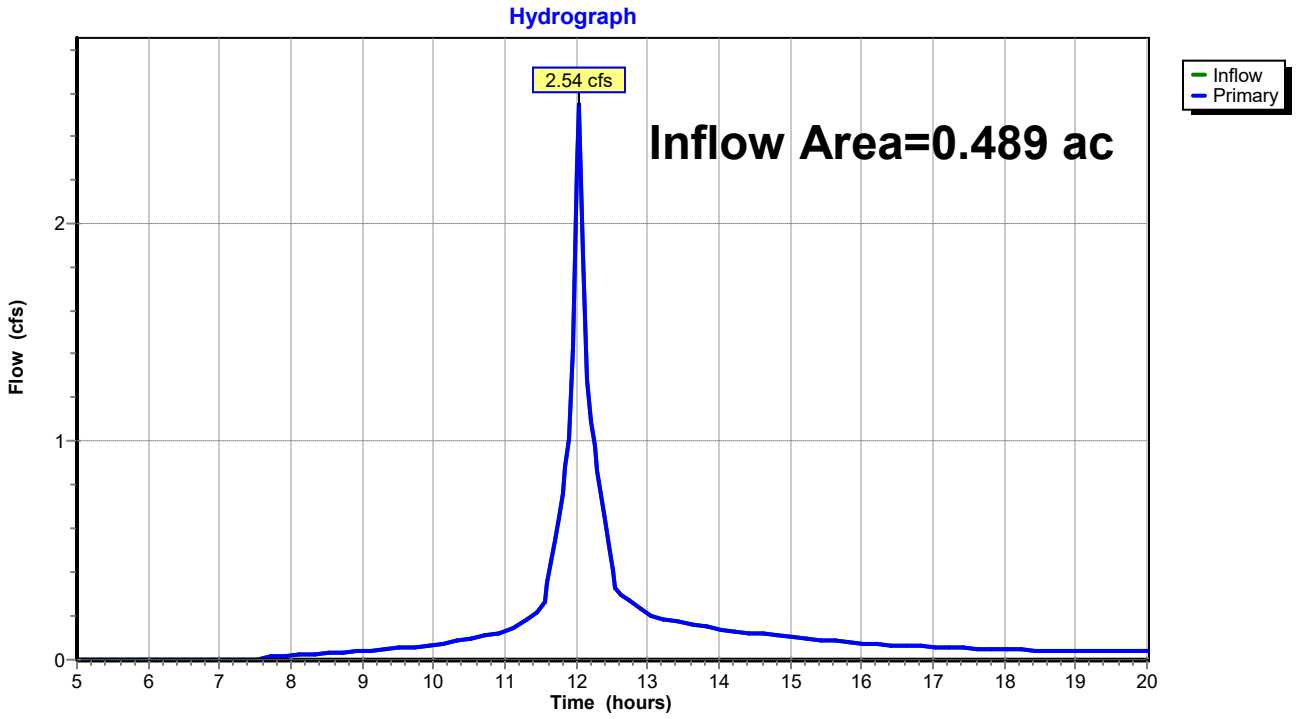

Summary for Link DP2: DP2

Inflow Area = 0.709 ac, 15.44% Impervious, Inflow Depth > 3.77" for 25-yr event
Inflow = 3.22 cfs @ 12.11 hrs, Volume= 0.223 af
Primary = 3.22 cfs @ 12.11 hrs, Volume= 0.223 af, Atten= 0%, Lag= 0.0 min
Routed to Reach SP1 : SACO RIVER / OCEAN

Primary outflow = Inflow, Time Span= 5.00-20.00 hrs, dt= 0.05 hrs

Link DP2: DP2

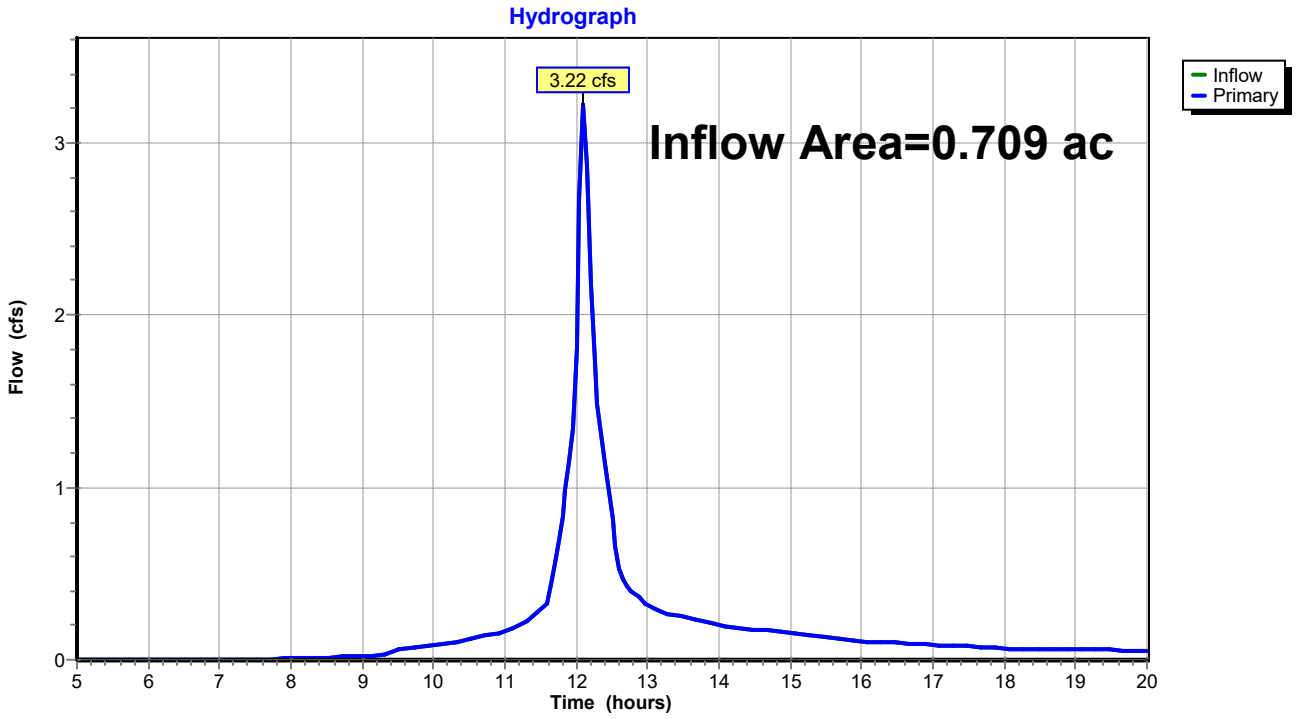

Time span=5.00-20.00 hrs, dt=0.05 hrs, 301 points
Runoff by SCS TR-20 method, UH=SCS, Weighted-CN
Reach routing by Stor-Ind method - Pond routing by Stor-Ind method

Subcatchment 1S: Post Subcatchment 1 Runoff Area=9,832 sf 50.01% Impervious Runoff Depth>6.75"
Flow Length=172' Tc=0.8 min CN=87 Runoff=2.01 cfs 0.127 af

Subcatchment 2S: Post Subcatchment 2 Runoff Area=11,488 sf 10.78% Impervious Runoff Depth>5.81"
Flow Length=133' Tc=3.4 min CN=79 Runoff=2.01 cfs 0.128 af

Subcatchment 3S: Post Subcatchment 3 Runoff Area=13,365 sf 33.49% Impervious Runoff Depth>6.40"
Flow Length=262' Tc=4.9 min CN=84 Runoff=2.37 cfs 0.164 af

Subcatchment 4S: Post Subcatchment 4 Runoff Area=17,529 sf 1.68% Impervious Runoff Depth>5.80"
Flow Length=126' Tc=7.2 min CN=79 Runoff=2.71 cfs 0.195 af

Subcatchment 5S: Post Subcatchment 5 Runoff Area=59,179 sf 4.06% Impervious Runoff Depth>5.92"
Flow Length=445' Tc=7.0 min CN=80 Runoff=9.35 cfs 0.670 af

Reach 1R: Reach 1 Inflow=1.97 cfs 0.126 af
Outflow=1.97 cfs 0.126 af

Reach 2R: Reach 2 Inflow=2.27 cfs 0.160 af
Outflow=2.27 cfs 0.160 af

Reach DP3: Shoreline 3 Inflow=9.35 cfs 0.670 af
Outflow=9.35 cfs 0.670 af

Reach SP1: SACO RIVER / OCEAN Inflow=17.21 cfs 1.278 af
Outflow=17.21 cfs 1.278 af

Pond 1P: Bioretention Filter Cell 1 Peak Elev=18.25' Storage=118 cf Inflow=2.01 cfs 0.127 af
Outflow=1.97 cfs 0.126 af

Pond 2P: CB-1 Peak Elev=14.54' Inflow=1.97 cfs 0.126 af
15.0" Round Culvert n=0.013 L=48.0' S=0.0365 '/' Outflow=1.97 cfs 0.126 af

Pond 3P: Bioretention Filter Cell 2 Peak Elev=23.79' Storage=103 cf Inflow=2.37 cfs 0.164 af
Outflow=2.35 cfs 0.163 af

Pond 4P: CB-2 Peak Elev=19.56' Inflow=2.35 cfs 0.163 af
18.0" Round Culvert n=0.013 L=40.0' S=0.0187 '/' Outflow=2.35 cfs 0.163 af

Pond 5P: Level Lip Speader Peak Elev=18.00' Storage=115 cf Inflow=2.35 cfs 0.163 af
Outflow=2.27 cfs 0.160 af

Link DP1: DP1 Inflow=3.88 cfs 0.253 af
Primary=3.88 cfs 0.253 af

Link DP2: DP2 Inflow=4.98 cfs 0.354 af
Primary=4.98 cfs 0.354 af

Total Runoff Area = 2.557 ac Runoff Volume = 1.283 af Average Runoff Depth = 6.02"
88.04% Pervious = 2.251 ac 11.96% Impervious = 0.306 ac

Summary for Subcatchment 1S: Post Subcatchment 1

Runoff = 2.01 cfs @ 12.01 hrs, Volume= 0.127 af, Depth> 6.75"
Routed to Pond 1P : Bioretention Filter Cell 1

Runoff by SCS TR-20 method, UH=SCS, Weighted-CN, Time Span= 5.00-20.00 hrs, dt= 0.05 hrs
Type III 24-hr 100-yr Rainfall=8.70"

	Area (sf)	CN	Description
	3,430	77	Woods, Good, HSG D
*	982	98	Ledge, HSG D
	595	80	>75% Grass cover, Good, HSG D
*	3,935	98	Paved Access Drive, HSG D
*	890	73	Bioretention Filter Cell, Good, HSG D
	9,832	87	Weighted Average
	4,915		49.99% Pervious Area
	4,917		50.01% Impervious Area

Tc (min)	Length (feet)	Slope (ft/ft)	Velocity (ft/sec)	Capacity (cfs)	Description
0.4	46	0.0500	1.73		**Sheet Flow, Tc-1** Smooth surfaces n= 0.011 P2= 3.30"
0.3	102	0.0500	5.25	15.74	**Channel Flow, Tc-2** Area= 3.0 sf Perim= 9.2' r= 0.33' n= 0.030 Earth, grassed & winding
0.1	24	0.0625	3.75		**Shallow Concentrated Flow, Tc-3** Grassed Waterway Kv= 15.0 fps
0.8	172	Total			

Subcatchment 1S: Post Subcatchment 1

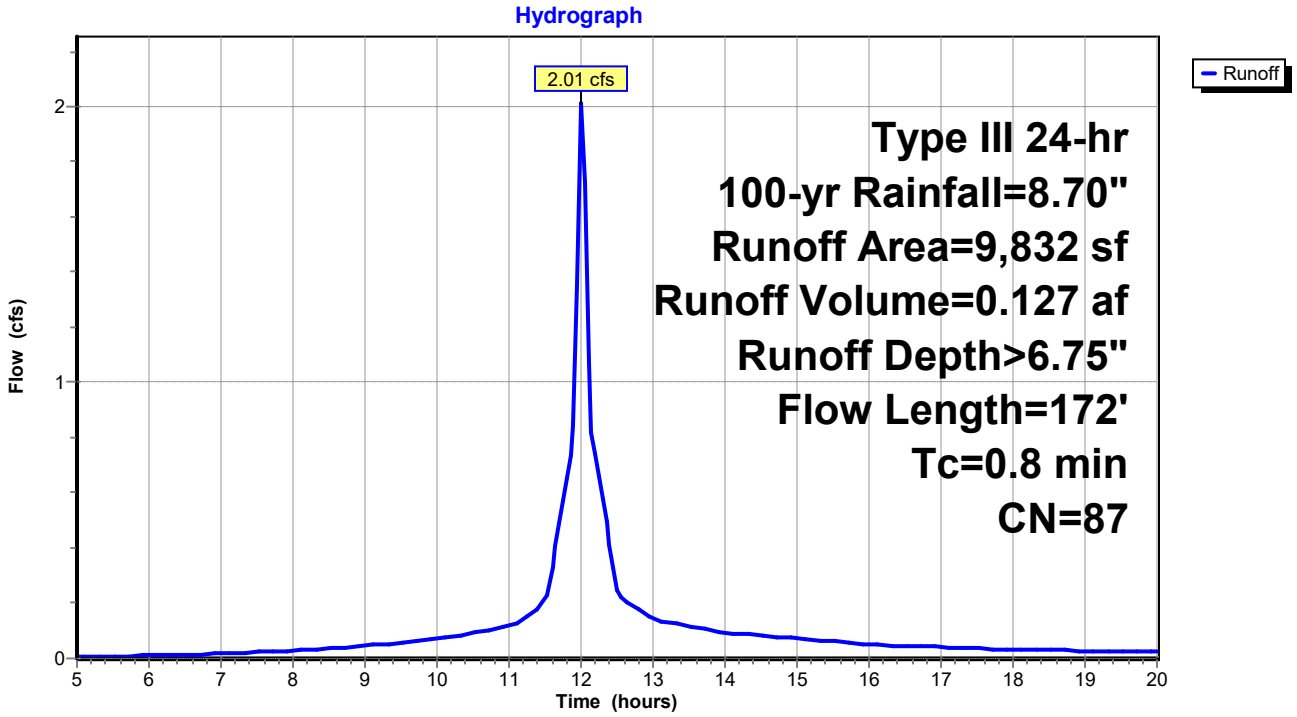

Summary for Subcatchment 2S: Post Subcatchment 2

Runoff = 2.01 cfs @ 12.05 hrs, Volume= 0.128 af, Depth> 5.81"
Routed to Link DP1 : DP1

Runoff by SCS TR-20 method, UH=SCS, Weighted-CN, Time Span= 5.00-20.00 hrs, dt= 0.05 hrs
Type III 24-hr 100-yr Rainfall=8.70"

Area (sf)	CN	Description
10,250	77	Woods, Good, HSG D
1,238	98	Paved parking, HSG D
11,488	79	Weighted Average
10,250		89.22% Pervious Area
1,238		10.78% Impervious Area

Tc (min)	Length (feet)	Slope (ft/ft)	Velocity (ft/sec)	Capacity (cfs)	Description
2.5	21	0.1905	0.14		**Sheet Flow, Tc-1** Woods: Light underbrush n= 0.400 P2= 3.30"
0.9	112	0.1696	2.06		**Shallow Concentrated Flow, Tc-2** Woodland Kv= 5.0 fps
3.4	133	Total			

Subcatchment 2S: Post Subcatchment 2

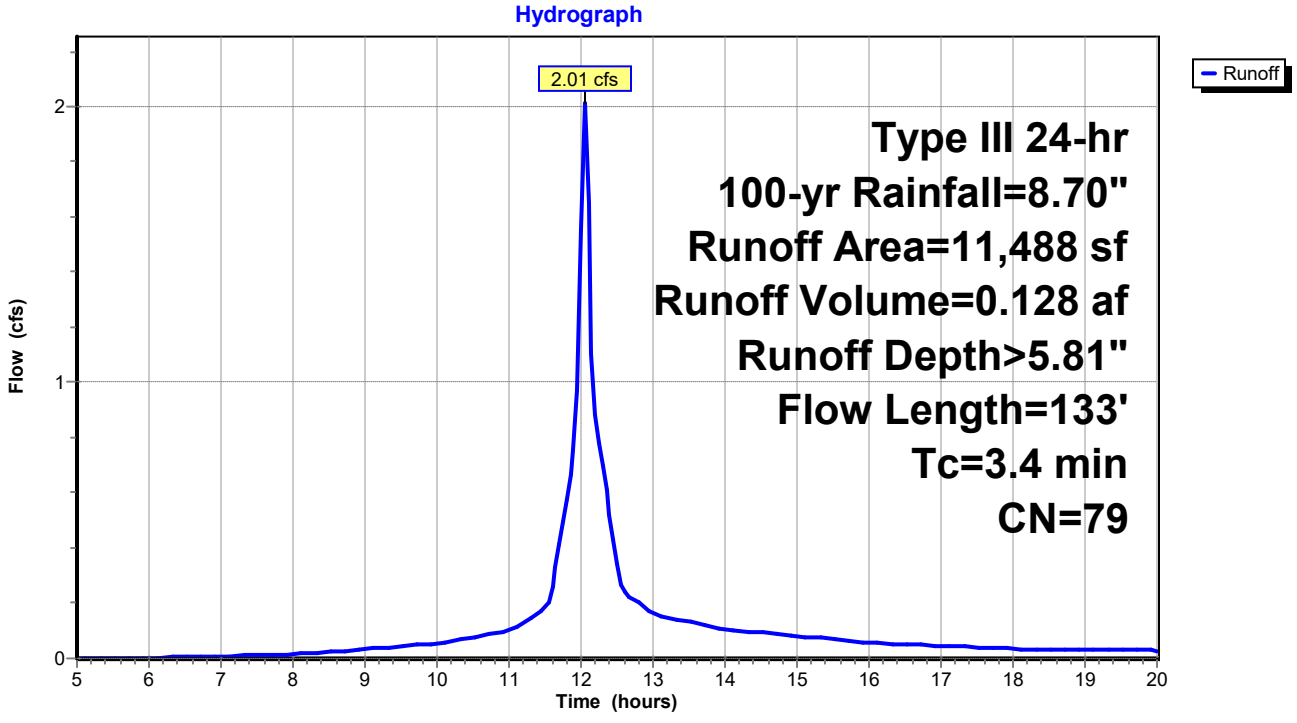

Summary for Subcatchment 3S: Post Subcatchment 3

Runoff = 2.37 cfs @ 12.07 hrs, Volume= 0.164 af, Depth> 6.40"
Routed to Pond 3P : Bioretention Filter Cell 2

Runoff by SCS TR-20 method, UH=SCS, Weighted-CN, Time Span= 5.00-20.00 hrs, dt= 0.05 hrs
Type III 24-hr 100-yr Rainfall=8.70"

	Area (sf)	CN	Description
	6,822	77	Woods, Good, HSG D
*	580	73	Biofiltration cell, Good, HSG D
*	3,768	98	Paved access drive, HSG D
	1,487	80	>75% Grass cover, Good, HSG D
*	708	98	Ledge, HSG D
	13,365	84	Weighted Average
	8,889		66.51% Pervious Area
	4,476		33.49% Impervious Area

Tc (min)	Length (feet)	Slope (ft/ft)	Velocity (ft/sec)	Capacity (cfs)	Description
4.2	43	0.2093	0.17		**Sheet Flow, Tc-1** Woods: Light underbrush n= 0.400 P2= 3.30"
0.7	214	0.0500	5.25	15.74	**Channel Flow, Tc-2** Area= 3.0 sf Perim= 9.2' r= 0.33' n= 0.030 Earth, grassed & winding
0.0	5	0.0500	3.35		**Shallow Concentrated Flow, Tc-3** Grassed Waterway Kv= 15.0 fps
4.9	262	Total			

Subcatchment 3S: Post Subcatchment 3

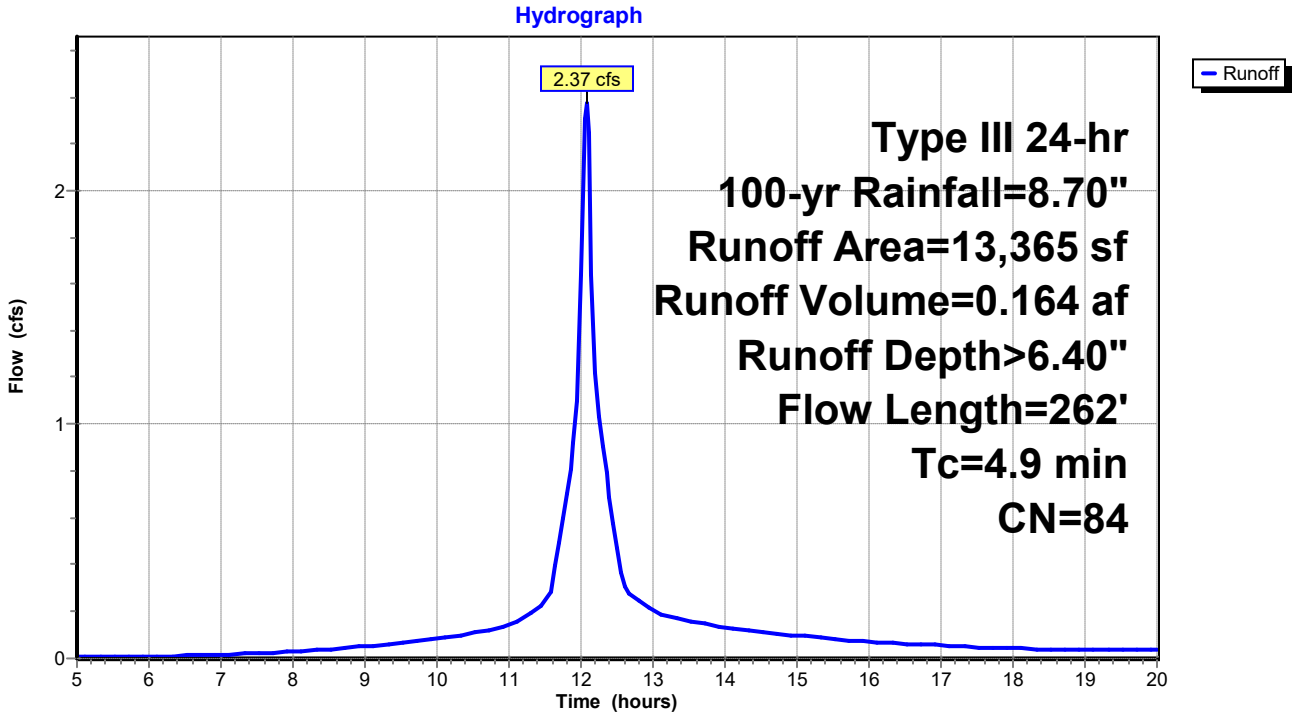

Summary for Subcatchment 4S: Post Subcatchment 4

Runoff = 2.71 cfs @ 12.10 hrs, Volume= 0.195 af, Depth> 5.80"
Routed to Link DP2 : DP2

Runoff by SCS TR-20 method, UH=SCS, Weighted-CN, Time Span= 5.00-20.00 hrs, dt= 0.05 hrs
Type III 24-hr 100-yr Rainfall=8.70"

	Area (sf)	CN	Description
*	295	98	Paved access drive, HSG D
	1,450	80	>75% Grass cover, Good, HSG D
	15,784	79	Woods, Fair, HSG D
	17,529	79	Weighted Average
	17,234		98.32% Pervious Area
	295		1.68% Impervious Area

Tc (min)	Length (feet)	Slope (ft/ft)	Velocity (ft/sec)	Capacity (cfs)	Description
6.8	62	0.1290	0.15		**Sheet Flow, Tc-1** Woods: Light underbrush n= 0.400 P2= 3.30"
0.4	64	0.2343	2.42		**Shallow Concentrated Flow, Tc-2** Woodland Kv= 5.0 fps
7.2	126	Total			

Subcatchment 4S: Post Subcatchment 4

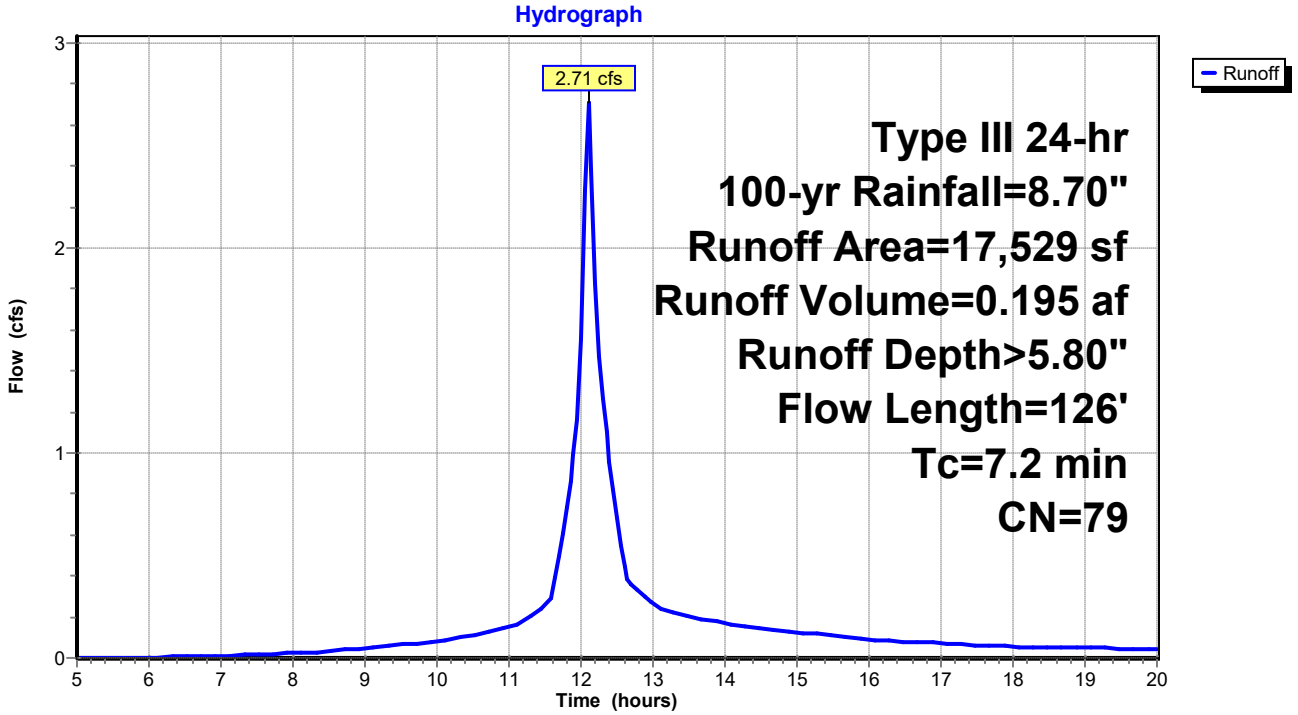

Summary for Subcatchment 5S: Post Subcatchment 5

Runoff = 9.35 cfs @ 12.10 hrs, Volume= 0.670 af, Depth> 5.92"
Routed to Reach DP3 : Shoreline 3

Runoff by SCS TR-20 method, UH=SCS, Weighted-CN, Time Span= 5.00-20.00 hrs, dt= 0.05 hrs
Type III 24-hr 100-yr Rainfall=8.70"

	Area (sf)	CN	Description
*	1,650	98	Paved acccess drive, HSG D
	751	98	Roofs, HSG D
*	6,955	88	Sand beach, HSG D
	3,872	96	Gravel surface, HSG D
	45,951	77	Woods, Good, HSG D
	59,179	80	Weighted Average
	56,778		95.94% Pervious Area
	2,401		4.06% Impervious Area

Tc (min)	Length (feet)	Slope (ft/ft)	Velocity (ft/sec)	Capacity (cfs)	Description
2.7	23	0.1740	0.14		**Sheet Flow, Tc-1** Woods: Light underbrush n= 0.400 P2= 3.30"
1.0	70	0.0574	1.20		**Shallow Concentrated Flow, Tc-2** Woodland Kv= 5.0 fps
0.5	170	0.1059	5.24		**Shallow Concentrated Flow, Tc-3** Unpaved Kv= 16.1 fps
2.5	140	0.0357	0.94		**Shallow Concentrated Flow, Tc-4** Woodland Kv= 5.0 fps
0.3	42	0.0714	2.67		**Shallow Concentrated Flow, Tc-5** Nearly Bare & Untilled Kv= 10.0 fps
7.0	445	Total			

Subcatchment 5S: Post Subcatchment 5

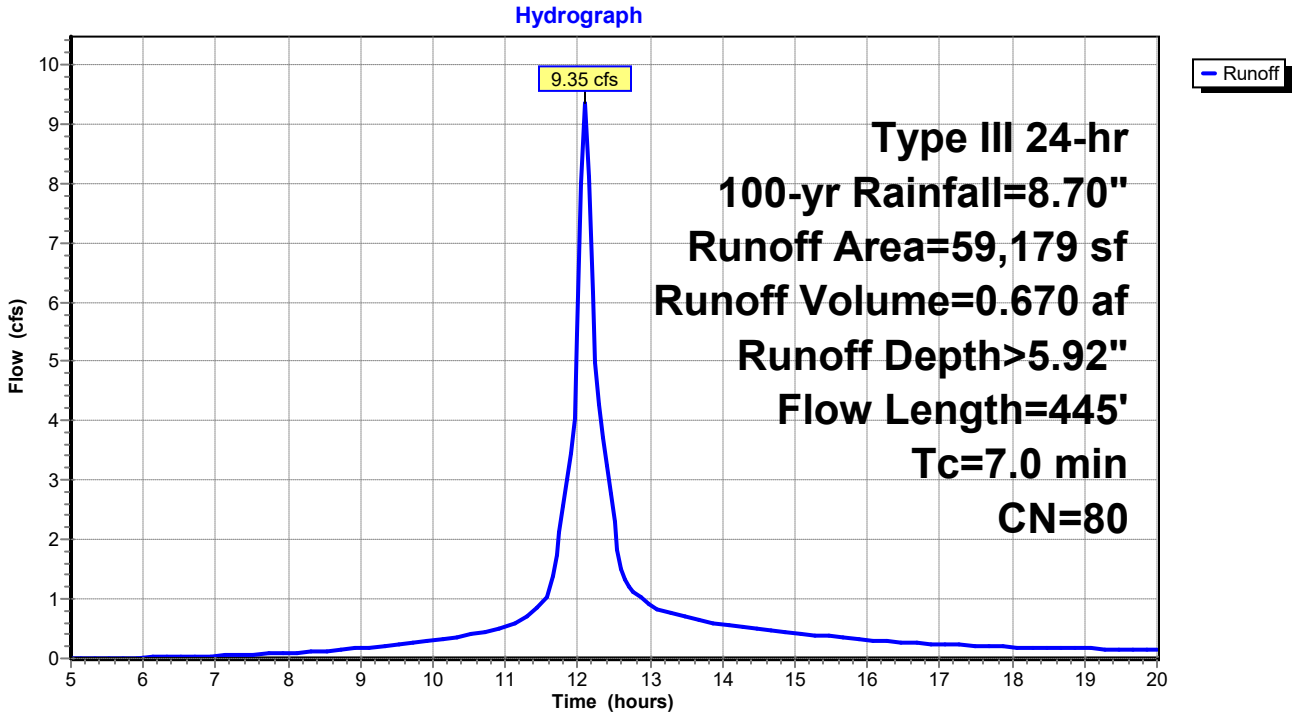

Summary for Reach 1R: Reach 1

Inflow Area = 0.226 ac, 50.01% Impervious, Inflow Depth > 6.68" for 100-yr event
Inflow = 1.97 cfs @ 12.02 hrs, Volume= 0.126 af
Outflow = 1.97 cfs @ 12.02 hrs, Volume= 0.126 af, Atten= 0%, Lag= 0.0 min
Routed to Link DP1 : DP1

Routing by Stor-Ind method, Time Span= 5.00-20.00 hrs, dt= 0.05 hrs

Reach 1R: Reach 1

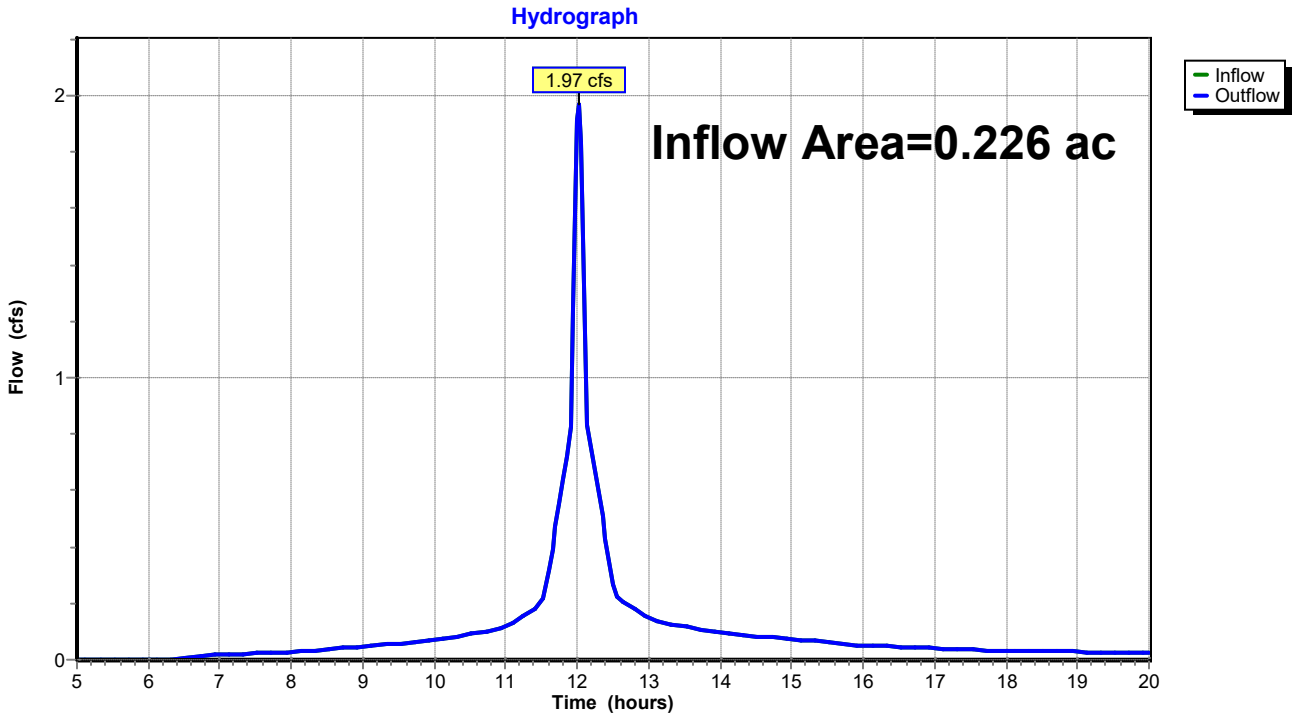

Summary for Reach 2R: Reach 2

Inflow Area = 0.307 ac, 33.49% Impervious, Inflow Depth > 6.25" for 100-yr event
Inflow = 2.27 cfs @ 12.10 hrs, Volume= 0.160 af
Outflow = 2.27 cfs @ 12.10 hrs, Volume= 0.160 af, Atten= 0%, Lag= 0.0 min
Routed to Link DP2 : DP2

Routing by Stor-Ind method, Time Span= 5.00-20.00 hrs, dt= 0.05 hrs

Reach 2R: Reach 2

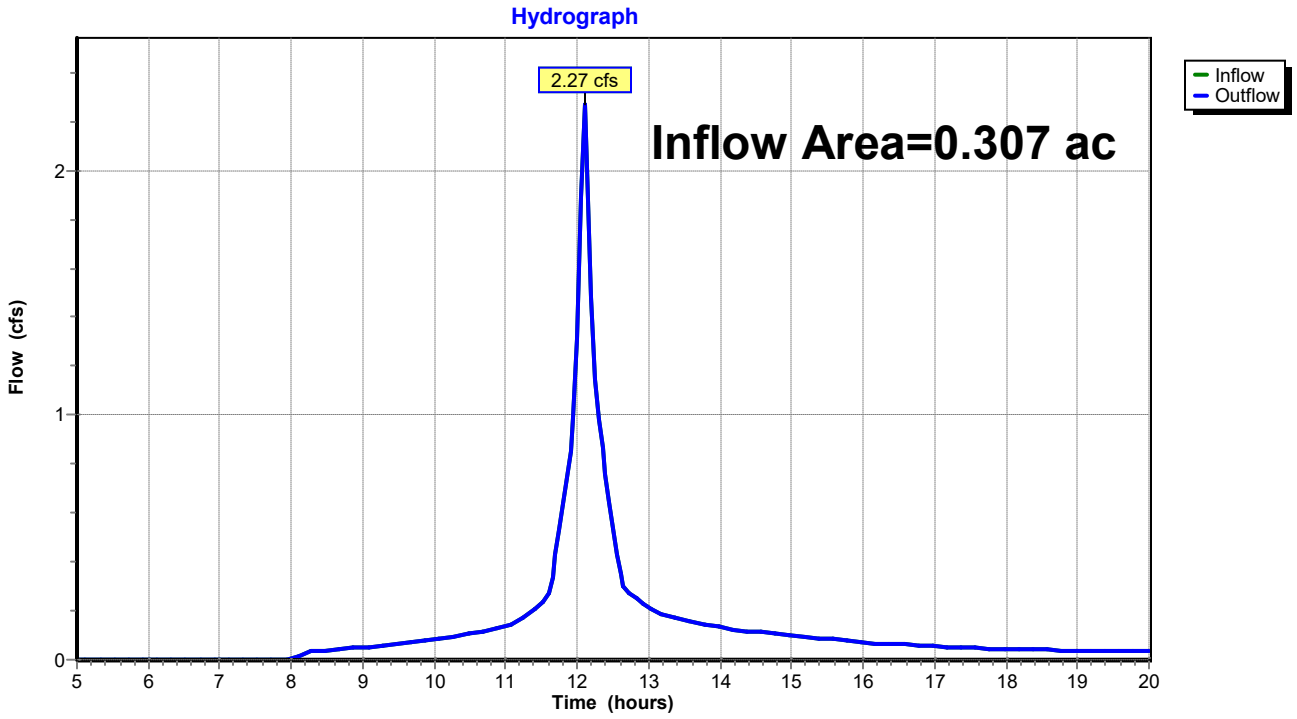

Summary for Reach DP3: Shoreline 3

Inflow Area = 1.359 ac, 4.06% Impervious, Inflow Depth > 5.92" for 100-yr event
Inflow = 9.35 cfs @ 12.10 hrs, Volume= 0.670 af
Outflow = 9.35 cfs @ 12.10 hrs, Volume= 0.670 af, Atten= 0%, Lag= 0.0 min
Routed to Reach SP1 : SACO RIVER / OCEAN

Routing by Stor-Ind method, Time Span= 5.00-20.00 hrs, dt= 0.05 hrs

Reach DP3: Shoreline 3

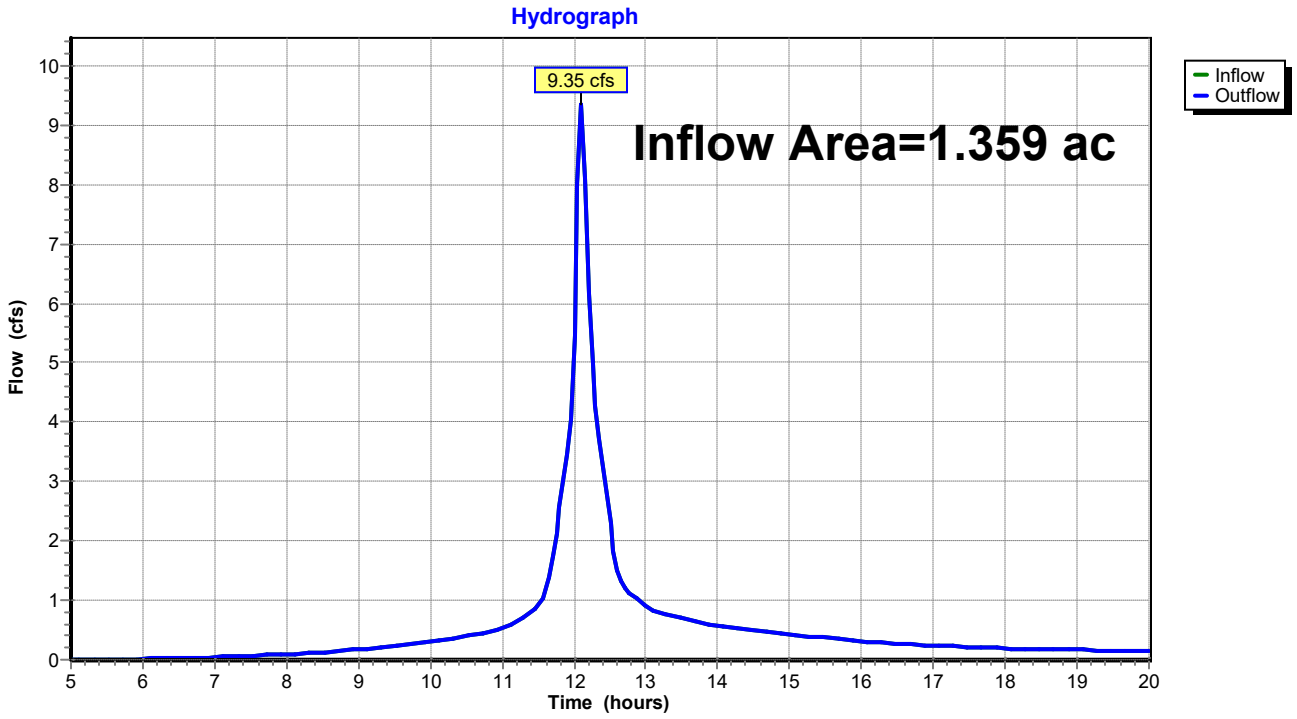

Summary for Reach SP1: SACO RIVER / OCEAN

Inflow Area = 2.557 ac, 11.96% Impervious, Inflow Depth > 6.00" for 100-yr event
Inflow = 17.21 cfs @ 12.09 hrs, Volume= 1.278 af
Outflow = 17.21 cfs @ 12.09 hrs, Volume= 1.278 af, Atten= 0%, Lag= 0.0 min

Routing by Stor-Ind method, Time Span= 5.00-20.00 hrs, dt= 0.05 hrs

Reach SP1: SACO RIVER / OCEAN

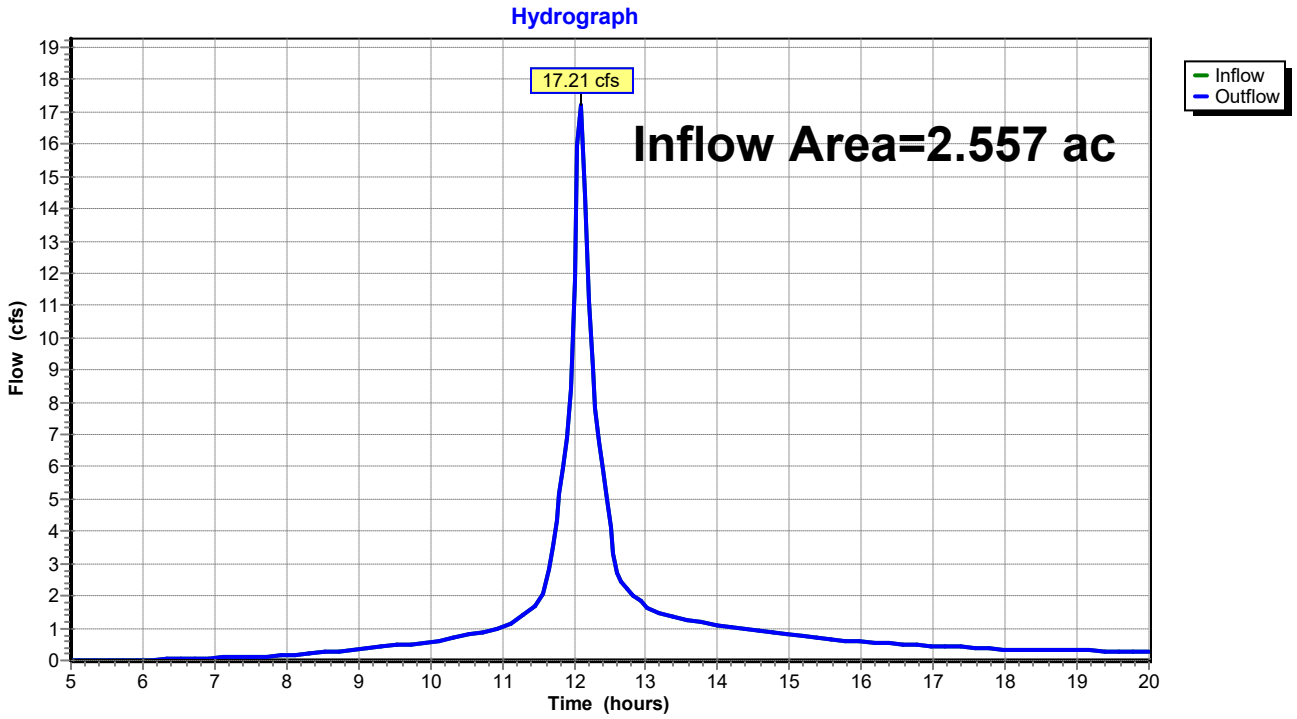

Summary for Pond 1P: Bioretention Filter Cell 1

Inflow Area = 0.226 ac, 50.01% Impervious, Inflow Depth > 6.75" for 100-yr event
Inflow = 2.01 cfs @ 12.01 hrs, Volume= 0.127 af
Outflow = 1.97 cfs @ 12.02 hrs, Volume= 0.126 af, Atten= 2%, Lag= 0.6 min
Primary = 1.97 cfs @ 12.02 hrs, Volume= 0.126 af
Routed to Pond 2P : CB-1

Routing by Stor-Ind method, Time Span= 5.00-20.00 hrs, dt= 0.05 hrs
Peak Elev= 18.25' @ 12.02 hrs Surf.Area= 294 sf Storage= 118 cf

Plug-Flow detention time= 9.1 min calculated for 0.125 af (99% of inflow)
Center-of-Mass det. time= 4.7 min (754.9 - 750.3)

Volume	Invert	Avail.Storage	Storage Description
#1	17.50'	200 cf	**Custom Stage Data (Prismatic)** Listed below (Recalc)

Elevation (feet)	Surf.Area (sq-ft)	Inc.Store (cubic-feet)	Cum.Store (cubic-feet)
17.50	0	0	0
18.00	213	53	53
18.50	372	146	200

Device	Routing	Invert	Outlet Devices
#1	Primary	18.00'	**18.0" Horiz. Orifice/Grate** C= 0.600 in 24.0" Grate (56% open area) Limited to weir flow at low heads

Primary OutFlow Max=1.88 cfs @ 12.02 hrs HW=18.25' (Free Discharge)
↑—**1=Orifice/Grate** (Weir Controls 1.88 cfs @ 1.62 fps)

Pond 1P: Bioretention Filter Cell 1

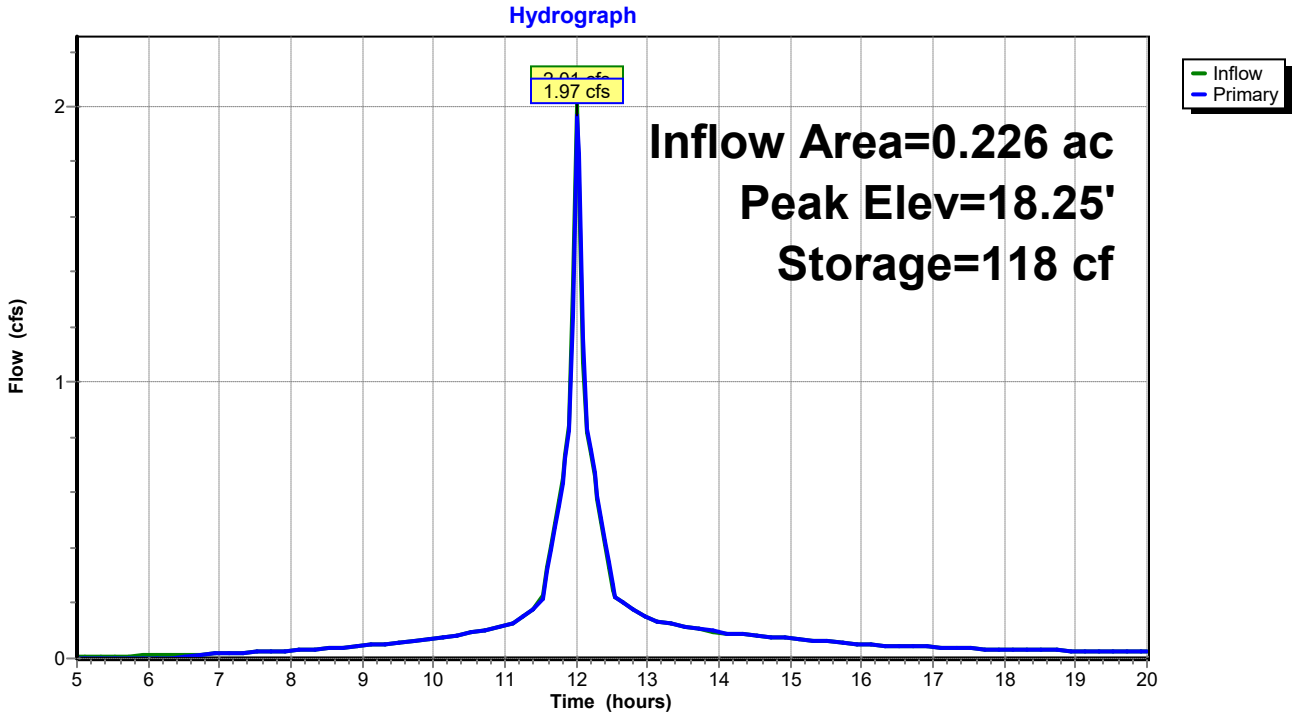

Summary for Pond 2P: CB-1

Inflow Area = 0.226 ac, 50.01% Impervious, Inflow Depth > 6.68" for 100-yr event
Inflow = 1.97 cfs @ 12.02 hrs, Volume= 0.126 af
Outflow = 1.97 cfs @ 12.02 hrs, Volume= 0.126 af, Atten= 0%, Lag= 0.0 min
Primary = 1.97 cfs @ 12.02 hrs, Volume= 0.126 af
Routed to Reach 1R : Reach 1

Routing by Stor-Ind method, Time Span= 5.00-20.00 hrs, dt= 0.05 hrs
Peak Elev= 14.54' @ 12.02 hrs

Device	Routing	Invert	Outlet Devices
#1	Primary	13.75'	**15.0" Round Culvert** L= 48.0' CPP, projecting, no headwall, Ke= 0.900 Inlet / Outlet Invert= 13.75' / 12.00' S= 0.0365 '/' Cc= 0.900 n= 0.013 Corrugated PE, smooth interior, Flow Area= 1.23 sf

Primary OutFlow Max=1.88 cfs @ 12.02 hrs HW=14.52' (Free Discharge)
1=Culvert (Inlet Controls 1.88 cfs @ 2.36 fps)

Pond 2P: CB-1

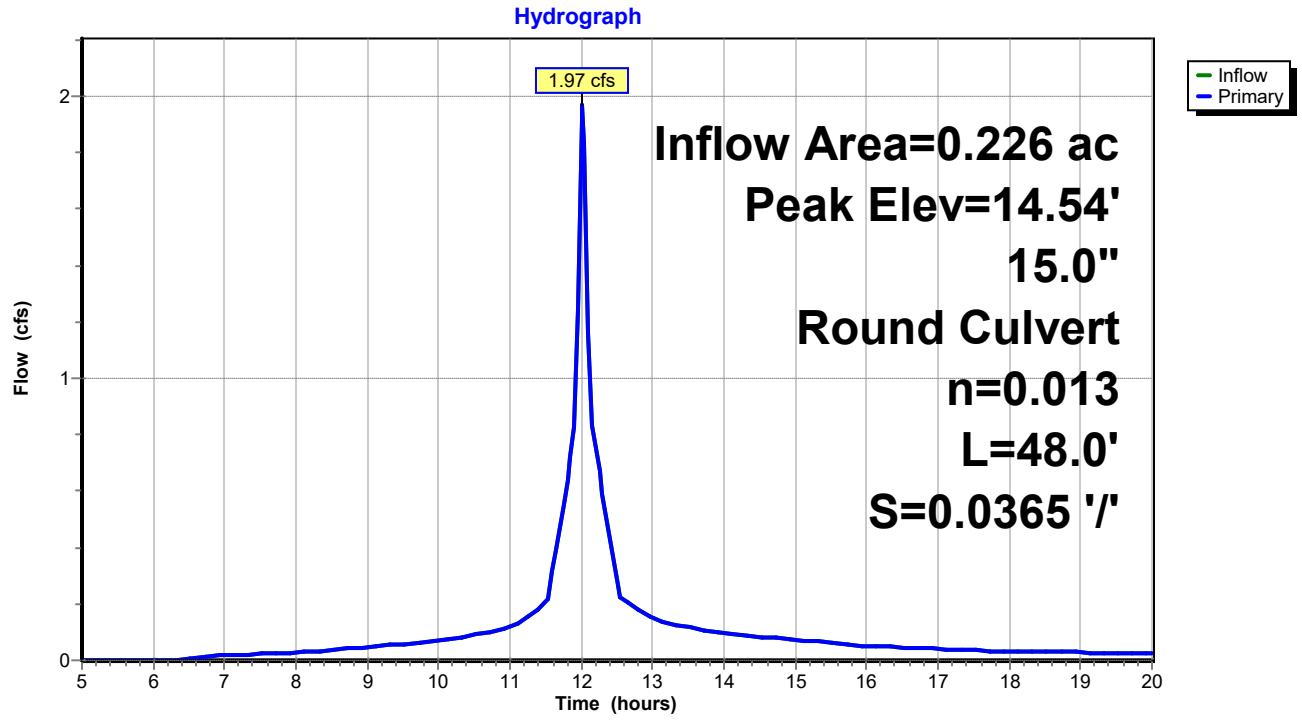

Summary for Pond 3P: Bioretention Filter Cell 2

Inflow Area = 0.307 ac, 33.49% Impervious, Inflow Depth > 6.40" for 100-yr event
Inflow = 2.37 cfs @ 12.07 hrs, Volume= 0.164 af
Outflow = 2.35 cfs @ 12.08 hrs, Volume= 0.163 af, Atten= 1%, Lag= 0.6 min
Primary = 2.35 cfs @ 12.08 hrs, Volume= 0.163 af
Routed to Pond 4P : CB-2

Routing by Stor-Ind method, Time Span= 5.00-20.00 hrs, dt= 0.05 hrs
Peak Elev= 23.79' @ 12.08 hrs Surf.Area= 263 sf Storage= 103 cf

Plug-Flow detention time= 5.8 min calculated for 0.163 af (99% of inflow)
Center-of-Mass det. time= 3.0 min (762.5 - 759.5)

Volume	Invert	Avail.Storage	Storage Description
#1	23.00'	380 cf	**Custom Stage Data (Prismatic)** Listed below (Recalc)

Elevation (feet)	Surf.Area (sq-ft)	Inc.Store (cubic-feet)	Cum.Store (cubic-feet)
23.00	0	0	0
24.00	335	168	168
24.50	515	213	380

Device	Routing	Invert	Outlet Devices
#1	Primary	23.50'	**18.0" Horiz. Orifice/Grate** C= 0.600 in 24.0" Grate (56% open area) Limited to weir flow at low heads

Primary OutFlow Max=2.28 cfs @ 12.08 hrs HW=23.78' (Free Discharge)
↑**1=Orifice/Grate** (Weir Controls 2.28 cfs @ 1.73 fps)

Pond 3P: Bioretention Filter Cell 2

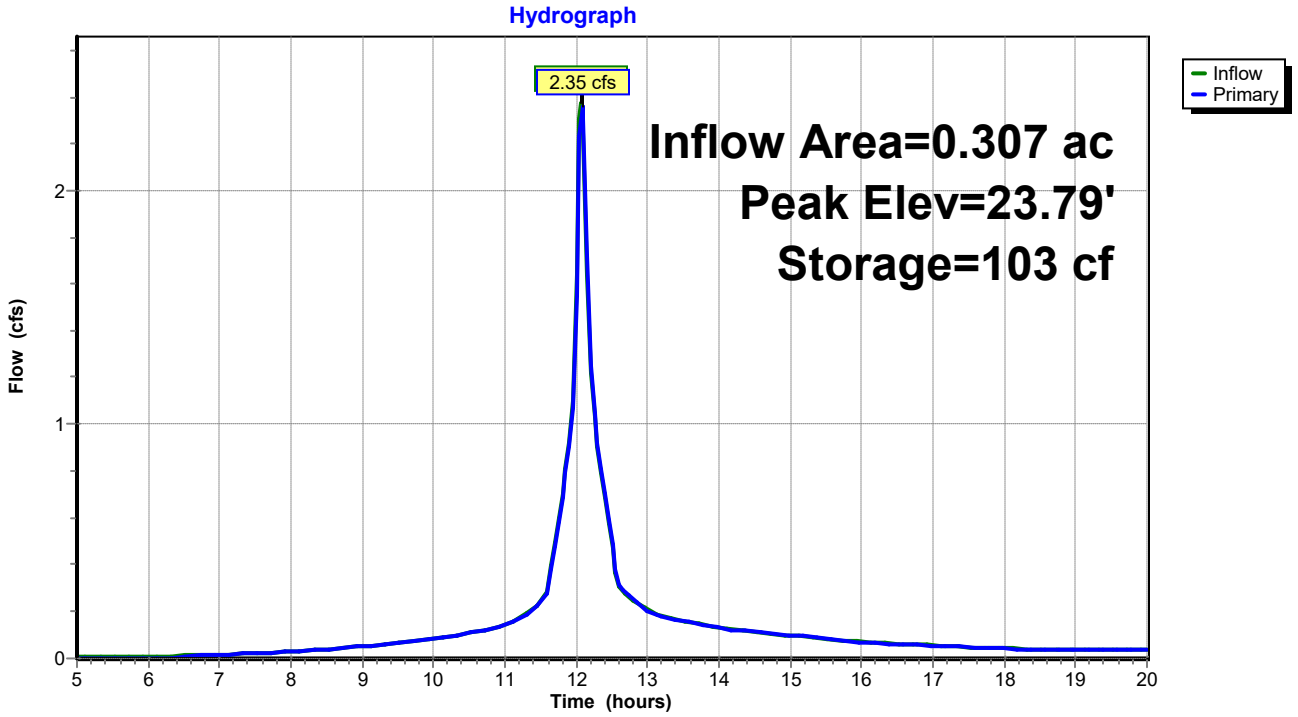

Summary for Pond 4P: CB-2

Inflow Area = 0.307 ac, 33.49% Impervious, Inflow Depth > 6.36" for 100-yr event
Inflow = 2.35 cfs @ 12.08 hrs, Volume= 0.163 af
Outflow = 2.35 cfs @ 12.08 hrs, Volume= 0.163 af, Atten= 0%, Lag= 0.0 min
Primary = 2.35 cfs @ 12.08 hrs, Volume= 0.163 af
Routed to Pond 5P : Level Lip Speader

Routing by Stor-Ind method, Time Span= 5.00-20.00 hrs, dt= 0.05 hrs
Peak Elev= 19.56' @ 12.08 hrs

Device	Routing	Invert	Outlet Devices
#1	Primary	18.75'	**18.0" Round Culvert** L= 40.0' CPP, projecting, no headwall, Ke= 0.900 Inlet / Outlet Invert= 18.75' / 18.00' S= 0.0187 '/' Cc= 0.900 n= 0.013 Corrugated PE, smooth interior, Flow Area= 1.77 sf

Primary OutFlow Max=2.28 cfs @ 12.08 hrs HW=19.54' (Free Discharge)
1=Culvert (Inlet Controls 2.28 cfs @ 2.40 fps)

Pond 4P: CB-2

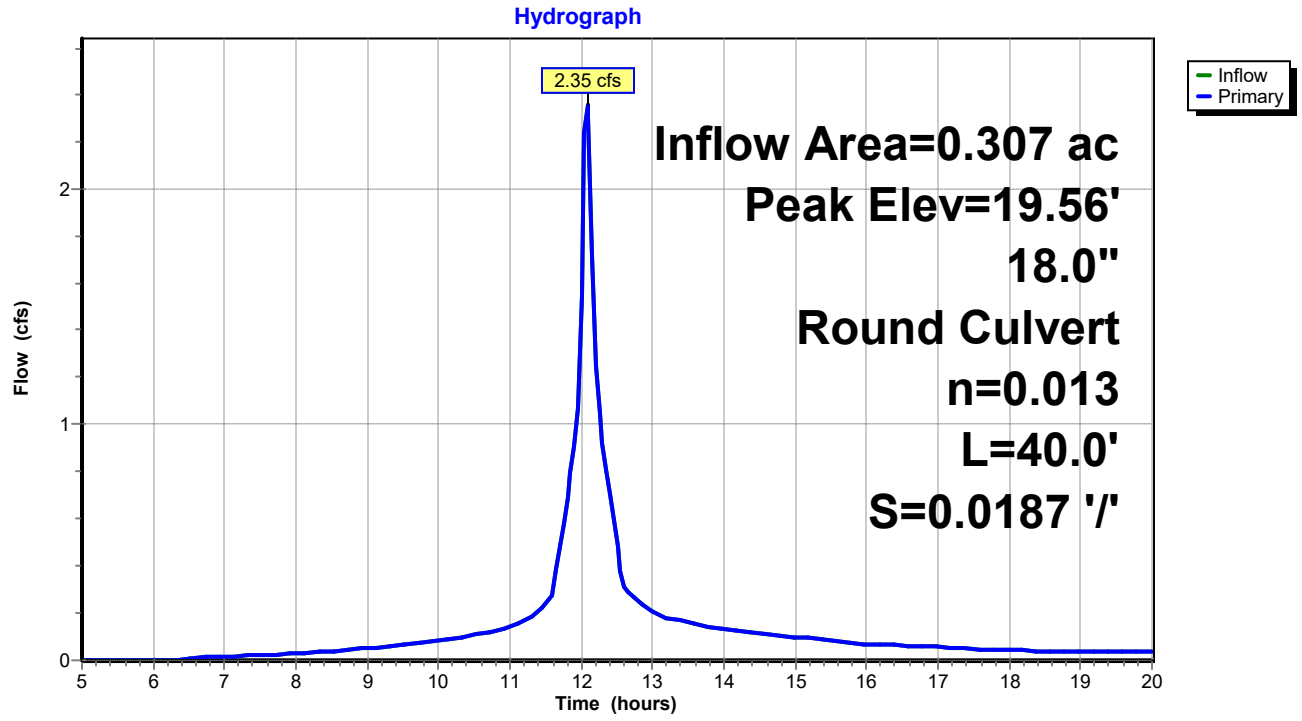

Summary for Pond 5P: Level Lip Speader

Inflow Area = 0.307 ac, 33.49% Impervious, Inflow Depth > 6.36" for 100-yr event
Inflow = 2.35 cfs @ 12.08 hrs, Volume= 0.163 af
Outflow = 2.27 cfs @ 12.10 hrs, Volume= 0.160 af, Atten= 4%, Lag= 1.5 min
Primary = 2.27 cfs @ 12.10 hrs, Volume= 0.160 af
Routed to Reach 2R : Reach 2

Routing by Stor-Ind method, Time Span= 5.00-20.00 hrs, dt= 0.05 hrs
Peak Elev= 18.00' @ 8.10 hrs Surf.Area= 168 sf Storage= 115 cf
Flood Elev= 20.00' Surf.Area= 168 sf Storage= 115 cf

Plug-Flow detention time= 13.3 min calculated for 0.160 af (98% of inflow)
Center-of-Mass det. time= 6.5 min (769.1 - 762.5)

Volume	Invert	Avail.Storage	Storage Description
#1	17.00'	115 cf	**Custom Stage Data (Prismatic)** Listed below (Recalc)

Elevation (feet)	Surf.Area (sq-ft)	Voids (%)	Inc.Store (cubic-feet)	Cum.Store (cubic-feet)
17.00	61	0.0	0	0
18.00	168	100.0	115	115

Device	Routing	Invert	Outlet Devices
#0	Primary	18.00'	**Automatic Storage Overflow** (Discharged without head)

Primary OutFlow Max=0.00 cfs @ 12.10 hrs HW=18.00' (Free Discharge)

Pond 5P: Level Lip Speader

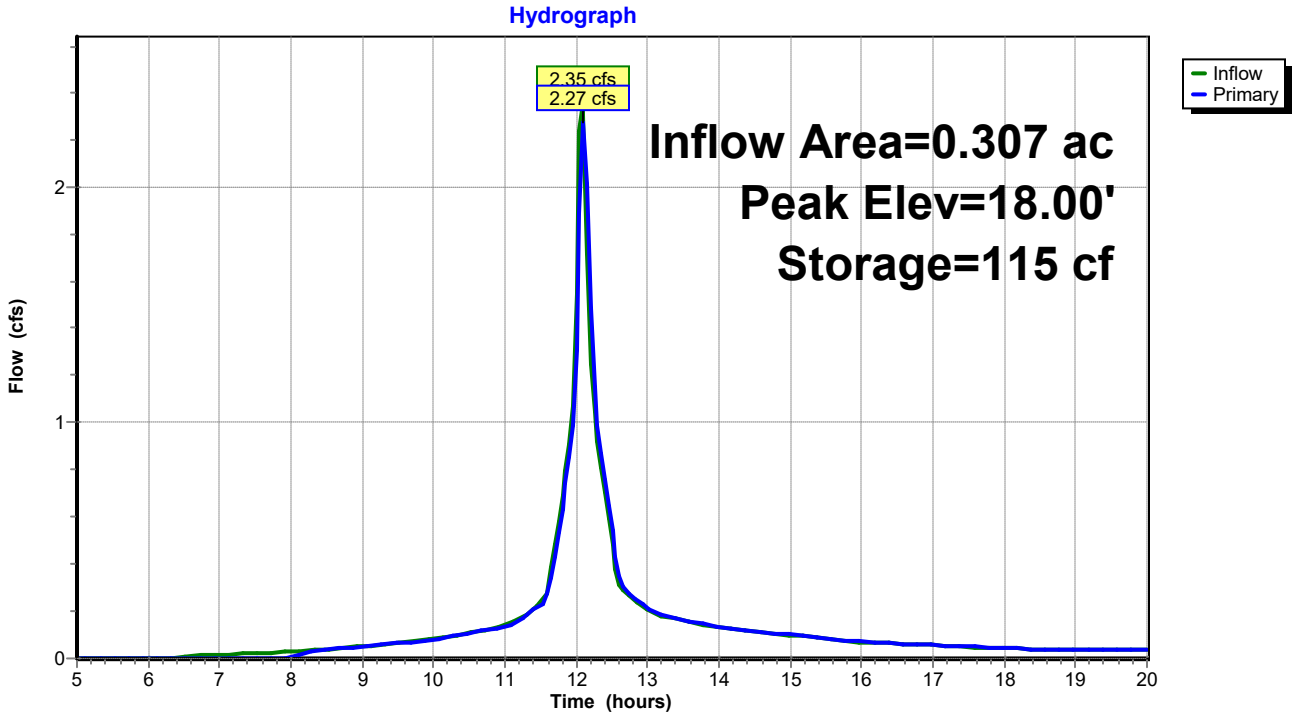

Summary for Link DP1: DP1

Inflow Area = 0.489 ac, 28.87% Impervious, Inflow Depth > 6.21" for 100-yr event
Inflow = 3.88 cfs @ 12.04 hrs, Volume= 0.253 af
Primary = 3.88 cfs @ 12.04 hrs, Volume= 0.253 af, Atten= 0%, Lag= 0.0 min
Routed to Reach SP1 : SACO RIVER / OCEAN

Primary outflow = Inflow, Time Span= 5.00-20.00 hrs, dt= 0.05 hrs

Link DP1: DP1

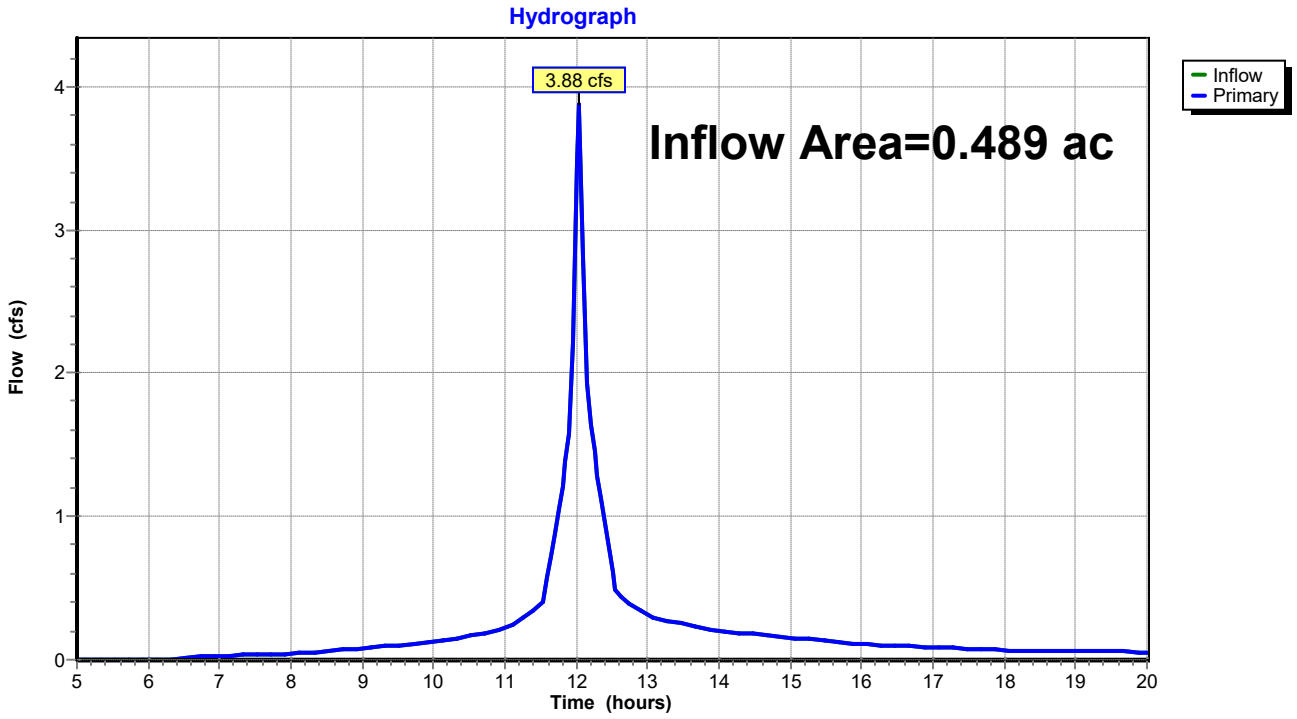

Summary for Link DP2: DP2

Inflow Area = 0.709 ac, 15.44% Impervious, Inflow Depth > 6.00" for 100-yr event
Inflow = 4.98 cfs @ 12.10 hrs, Volume= 0.354 af
Primary = 4.98 cfs @ 12.10 hrs, Volume= 0.354 af, Atten= 0%, Lag= 0.0 min
Routed to Reach SP1 : SACO RIVER / OCEAN

Primary outflow = Inflow, Time Span= 5.00-20.00 hrs, dt= 0.05 hrs

Link DP2: DP2

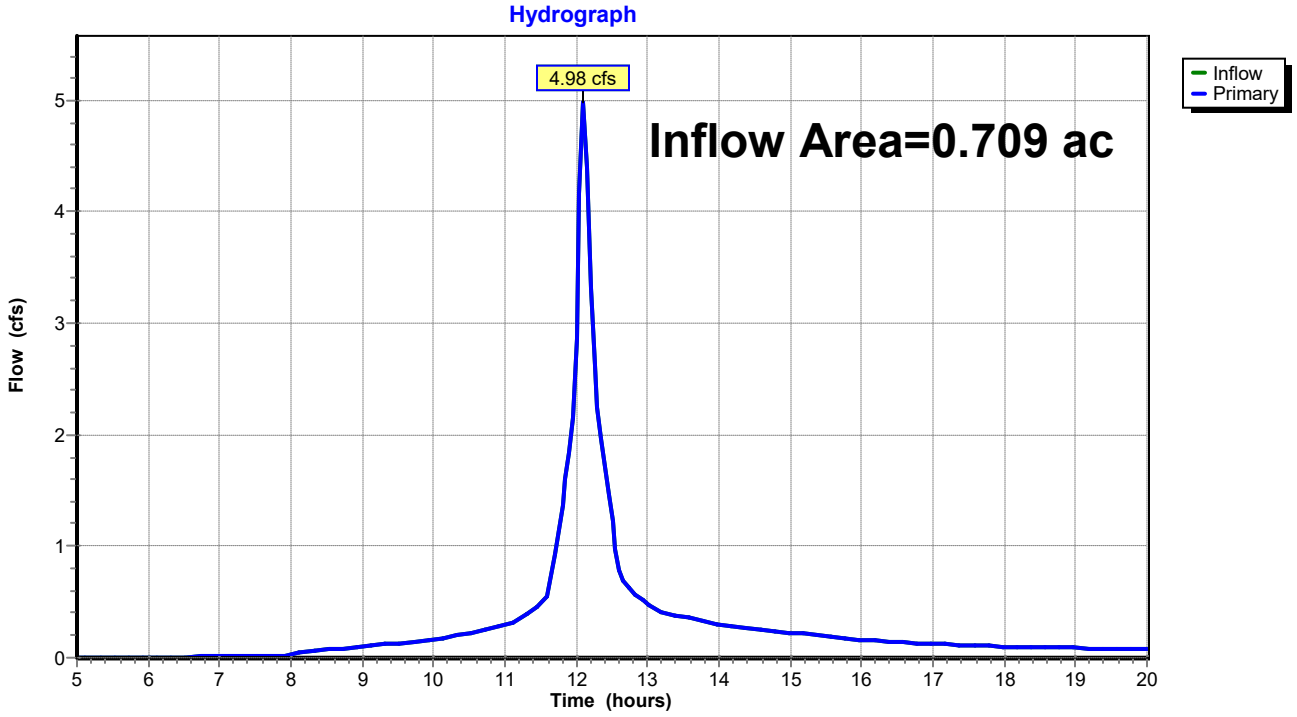

Time span=5.00-20.00 hrs, dt=0.05 hrs, 301 points
Runoff by SCS TR-20 method, UH=SCS, Weighted-CN
Reach routing by Stor-Ind method - Pond routing by Stor-Ind method

Subcatchment 1S: Post Subcatchment 1 Runoff Area=9,832 sf 50.01% Impervious Runoff Depth>0.20"
Flow Length=172' Tc=0.8 min CN=87 Runoff=0.06 cfs 0.004 af

Subcatchment 2S: Post Subcatchment 2 Runoff Area=11,488 sf 10.78% Impervious Runoff Depth>0.06"
Flow Length=133' Tc=3.4 min CN=79 Runoff=0.01 cfs 0.001 af

Subcatchment 3S: Post Subcatchment 3 Runoff Area=13,365 sf 33.49% Impervious Runoff Depth>0.13"
Flow Length=262' Tc=4.9 min CN=84 Runoff=0.04 cfs 0.003 af

Subcatchment 4S: Post Subcatchment 4 Runoff Area=17,529 sf 1.68% Impervious Runoff Depth>0.06"
Flow Length=126' Tc=7.2 min CN=79 Runoff=0.01 cfs 0.002 af

Subcatchment 5S: Post Subcatchment 5 Runoff Area=59,179 sf 4.06% Impervious Runoff Depth>0.07"
Flow Length=445' Tc=7.0 min CN=80 Runoff=0.05 cfs 0.008 af

Reach 1R: Reach 1 Inflow=0.02 cfs 0.003 af
Outflow=0.02 cfs 0.003 af

Reach 2R: Reach 2 Inflow=0.00 cfs 0.000 af
Outflow=0.00 cfs 0.000 af

Reach DP3: Shoreline 3 Inflow=0.05 cfs 0.008 af
Outflow=0.05 cfs 0.008 af

Reach SP1: SACO RIVER / OCEAN Inflow=0.09 cfs 0.014 af
Outflow=0.09 cfs 0.014 af

Pond 1P: Bioretention Filter Cell 1 Peak Elev=18.01' Storage=56 cf Inflow=0.06 cfs 0.004 af
Outflow=0.02 cfs 0.003 af

Pond 2P: CB-1 Peak Elev=13.83' Inflow=0.02 cfs 0.003 af
15.0" Round Culvert n=0.013 L=48.0' S=0.0365 '/' Outflow=0.02 cfs 0.003 af

Pond 3P: Bioretention Filter Cell 2 Peak Elev=23.51' Storage=44 cf Inflow=0.04 cfs 0.003 af
Outflow=0.02 cfs 0.002 af

Pond 4P: CB-2 Peak Elev=18.81' Inflow=0.02 cfs 0.002 af
18.0" Round Culvert n=0.013 L=40.0' S=0.0187 '/' Outflow=0.02 cfs 0.002 af

Pond 5P: Level Lip Speader Peak Elev=17.95' Storage=106 cf Inflow=0.02 cfs 0.002 af
Outflow=0.00 cfs 0.000 af

Link DP1: DP1 Inflow=0.03 cfs 0.004 af
Primary=0.03 cfs 0.004 af

Link DP2: DP2 Inflow=0.01 cfs 0.002 af
Primary=0.01 cfs 0.002 af

Total Runoff Area = 2.557 ac Runoff Volume = 0.018 af Average Runoff Depth = 0.09"
88.04% Pervious = 2.251 ac 11.96% Impervious = 0.306 ac

Summary for Subcatchment 1S: Post Subcatchment 1

Runoff = 0.06 cfs @ 12.03 hrs, Volume= 0.004 af, Depth> 0.20"
Routed to Pond 1P : Bioretention Filter Cell 1

Runoff by SCS TR-20 method, UH=SCS, Weighted-CN, Time Span= 5.00-20.00 hrs, dt= 0.05 hrs
Type III 24-hr WQ Rainfall=1.00"

	Area (sf)	CN	Description
	3,430	77	Woods, Good, HSG D
*	982	98	Ledge, HSG D
	595	80	>75% Grass cover, Good, HSG D
*	3,935	98	Paved Access Drive, HSG D
*	890	73	Bioretention Filter Cell, Good, HSG D
	9,832	87	Weighted Average
	4,915		49.99% Pervious Area
	4,917		50.01% Impervious Area

Tc (min)	Length (feet)	Slope (ft/ft)	Velocity (ft/sec)	Capacity (cfs)	Description
0.4	46	0.0500	1.73		**Sheet Flow, Tc-1** Smooth surfaces n= 0.011 P2= 3.30"
0.3	102	0.0500	5.25	15.74	**Channel Flow, Tc-2** Area= 3.0 sf Perim= 9.2' r= 0.33' n= 0.030 Earth, grassed & winding
0.1	24	0.0625	3.75		**Shallow Concentrated Flow, Tc-3** Grassed Waterway Kv= 15.0 fps
0.8	172	Total			

Subcatchment 1S: Post Subcatchment 1

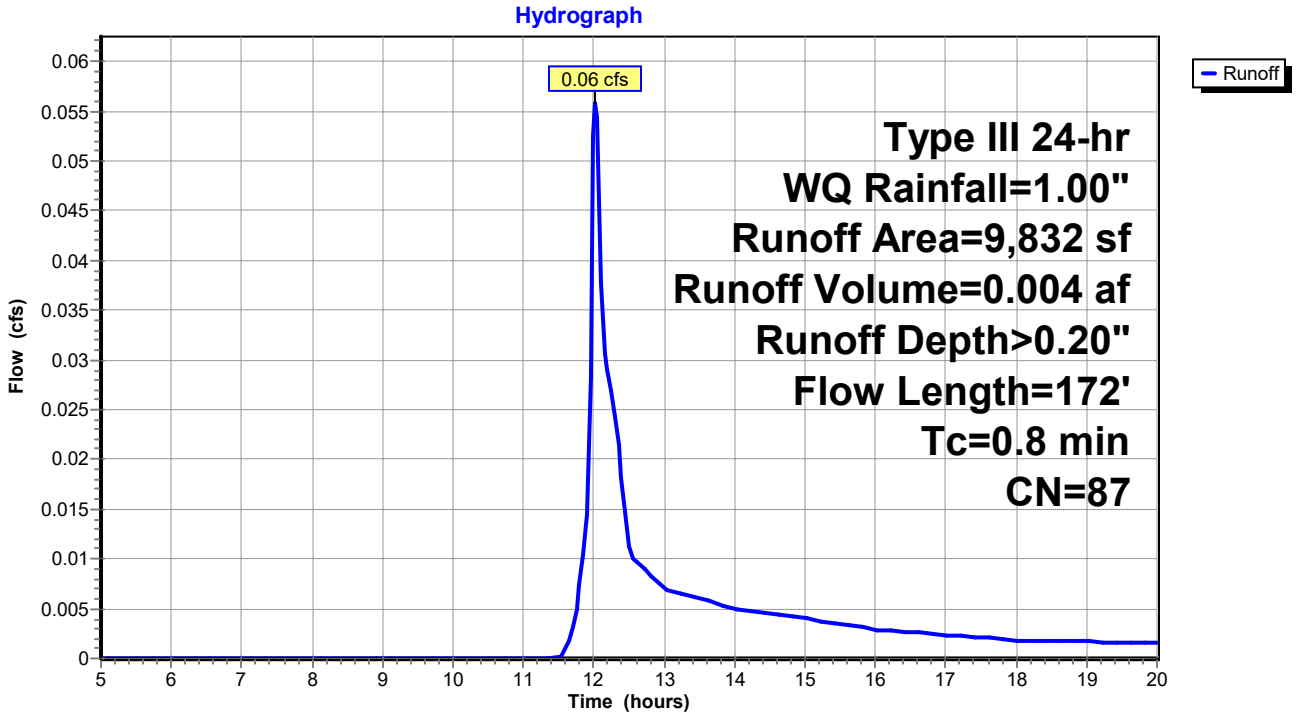

Summary for Subcatchment 2S: Post Subcatchment 2

Runoff = 0.01 cfs @ 12.31 hrs, Volume= 0.001 af, Depth> 0.06"
Routed to Link DP1 : DP1

Runoff by SCS TR-20 method, UH=SCS, Weighted-CN, Time Span= 5.00-20.00 hrs, dt= 0.05 hrs
Type III 24-hr WQ Rainfall=1.00"

Area (sf)	CN	Description
10,250	77	Woods, Good, HSG D
1,238	98	Paved parking, HSG D
11,488	79	Weighted Average
10,250		89.22% Pervious Area
1,238		10.78% Impervious Area

Tc (min)	Length (feet)	Slope (ft/ft)	Velocity (ft/sec)	Capacity (cfs)	Description
2.5	21	0.1905	0.14		**Sheet Flow, Tc-1** Woods: Light underbrush n= 0.400 P2= 3.30"
0.9	112	0.1696	2.06		**Shallow Concentrated Flow, Tc-2** Woodland Kv= 5.0 fps
3.4	133	Total			

Subcatchment 2S: Post Subcatchment 2

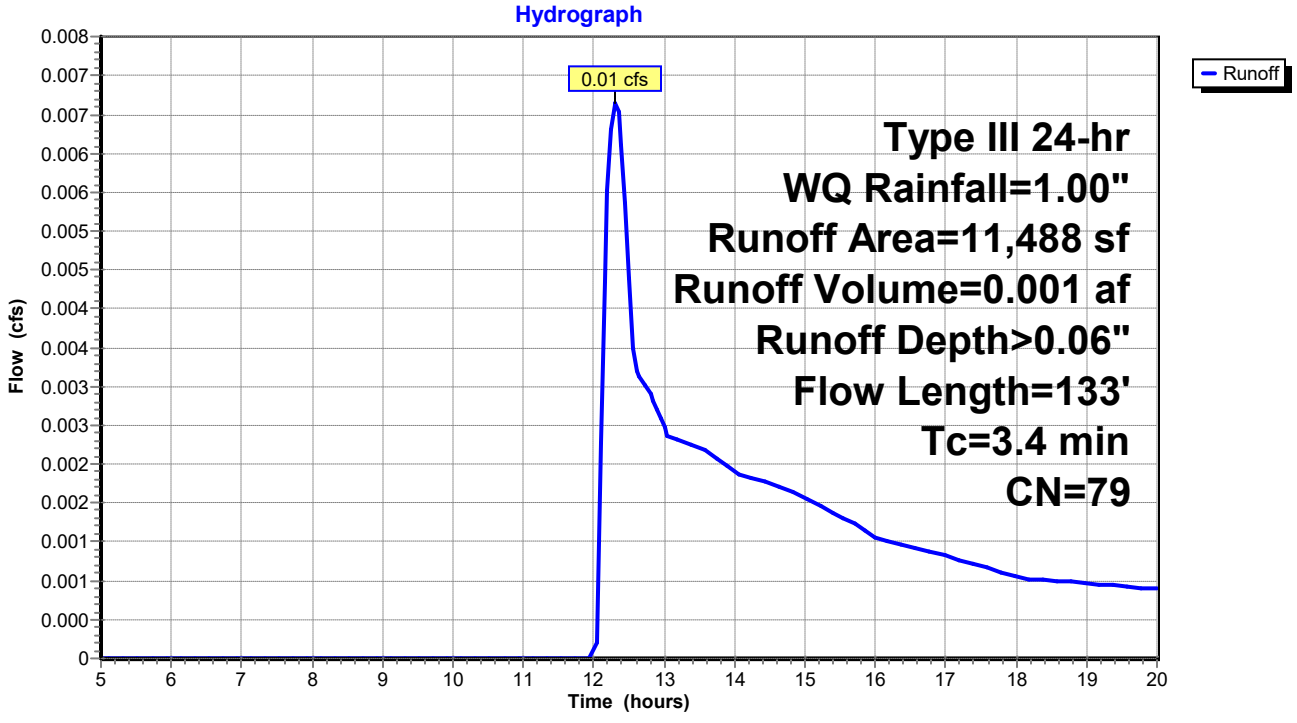

Summary for Subcatchment 3S: Post Subcatchment 3

Runoff = 0.04 cfs @ 12.11 hrs, Volume= 0.003 af, Depth> 0.13"
Routed to Pond 3P : Bioretention Filter Cell 2

Runoff by SCS TR-20 method, UH=SCS, Weighted-CN, Time Span= 5.00-20.00 hrs, dt= 0.05 hrs
Type III 24-hr WQ Rainfall=1.00"

	Area (sf)	CN	Description
	6,822	77	Woods, Good, HSG D
*	580	73	Biofiltration cell, Good, HSG D
*	3,768	98	Paved access drive, HSG D
	1,487	80	>75% Grass cover, Good, HSG D
*	708	98	Ledge, HSG D
	13,365	84	Weighted Average
	8,889		66.51% Pervious Area
	4,476		33.49% Impervious Area

Tc (min)	Length (feet)	Slope (ft/ft)	Velocity (ft/sec)	Capacity (cfs)	Description
4.2	43	0.2093	0.17		**Sheet Flow, Tc-1** Woods: Light underbrush n= 0.400 P2= 3.30"
0.7	214	0.0500	5.25	15.74	**Channel Flow, Tc-2** Area= 3.0 sf Perim= 9.2' r= 0.33' n= 0.030 Earth, grassed & winding
0.0	5	0.0500	3.35		**Shallow Concentrated Flow, Tc-3** Grassed Waterway Kv= 15.0 fps
4.9	262	Total			

Subcatchment 3S: Post Subcatchment 3

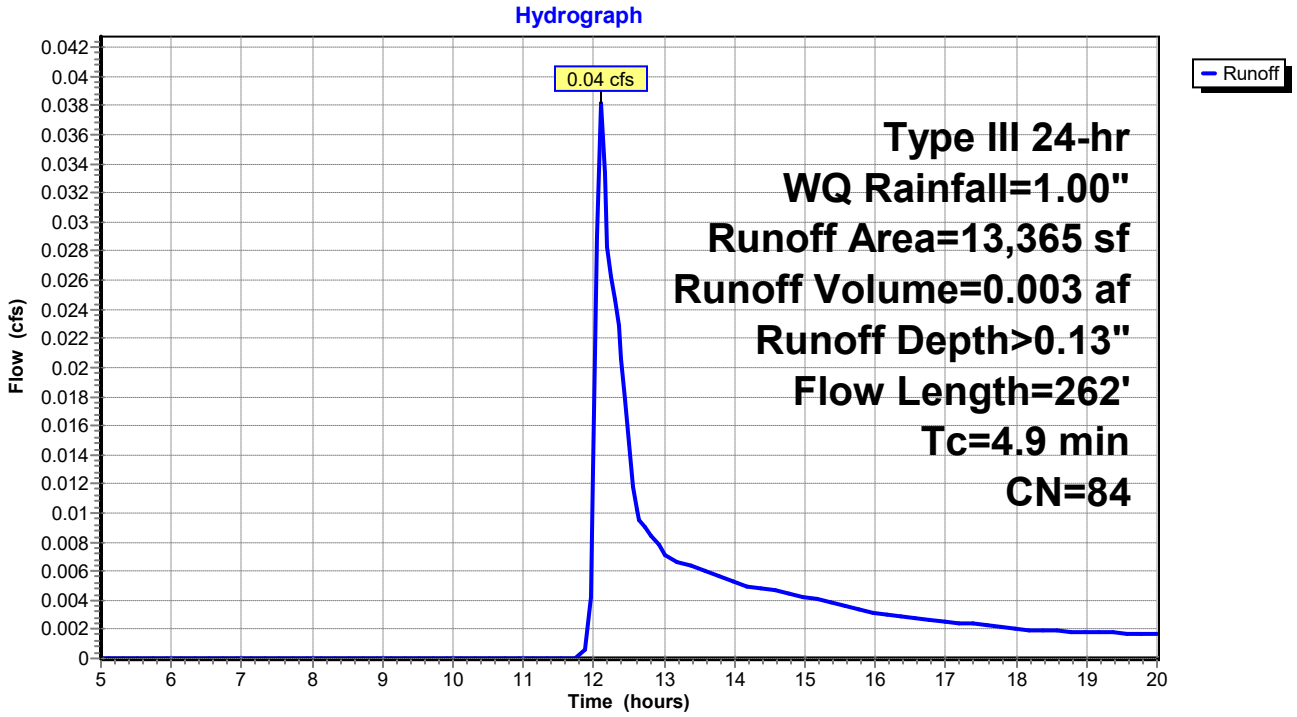

Summary for Subcatchment 4S: Post Subcatchment 4

Runoff = 0.01 cfs @ 12.38 hrs, Volume= 0.002 af, Depth> 0.06"
Routed to Link DP2 : DP2

Runoff by SCS TR-20 method, UH=SCS, Weighted-CN, Time Span= 5.00-20.00 hrs, dt= 0.05 hrs
Type III 24-hr WQ Rainfall=1.00"

	Area (sf)	CN	Description
*	295	98	Paved access drive, HSG D
	1,450	80	>75% Grass cover, Good, HSG D
	15,784	79	Woods, Fair, HSG D
	17,529	79	Weighted Average
	17,234		98.32% Pervious Area
	295		1.68% Impervious Area

Tc (min)	Length (feet)	Slope (ft/ft)	Velocity (ft/sec)	Capacity (cfs)	Description
6.8	62	0.1290	0.15		**Sheet Flow, Tc-1** Woods: Light underbrush n= 0.400 P2= 3.30"
0.4	64	0.2343	2.42		**Shallow Concentrated Flow, Tc-2** Woodland Kv= 5.0 fps
7.2	126	Total			

Subcatchment 4S: Post Subcatchment 4

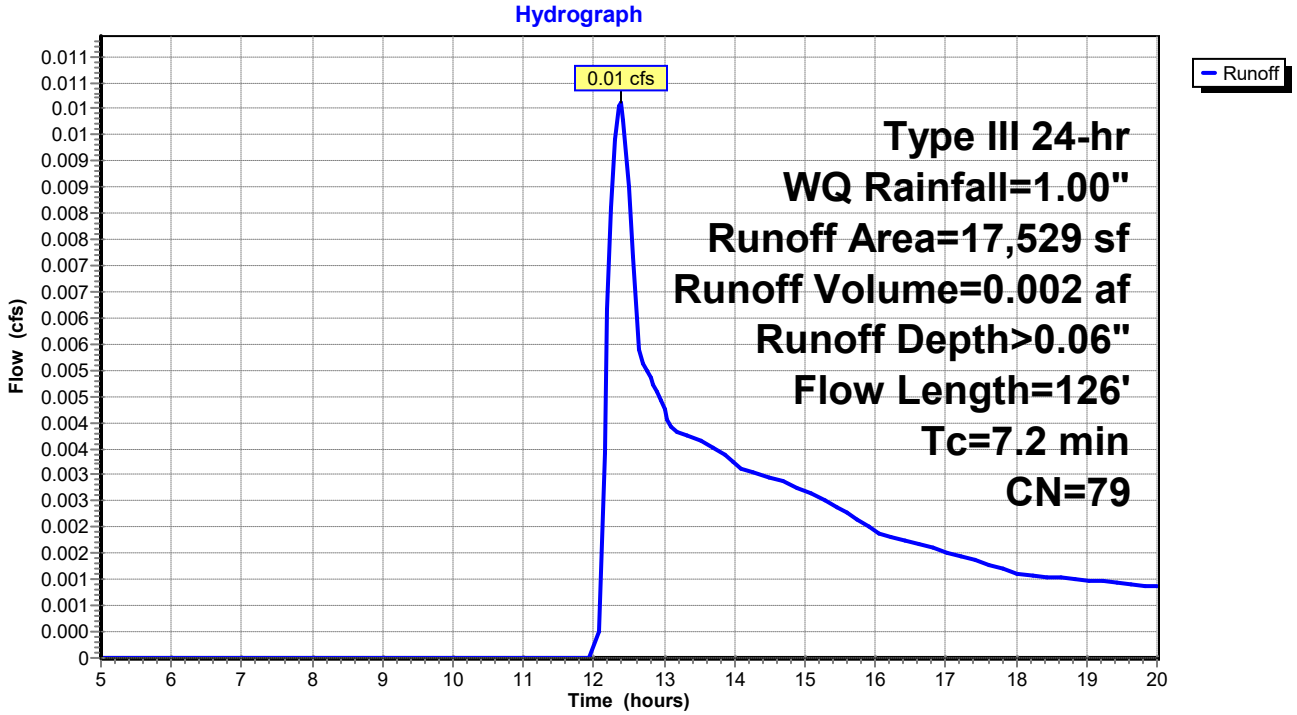

Summary for Subcatchment 5S: Post Subcatchment 5

Runoff = 0.05 cfs @ 12.34 hrs, Volume= 0.008 af, Depth> 0.07"
Routed to Reach DP3 : Shoreline 3

Runoff by SCS TR-20 method, UH=SCS, Weighted-CN, Time Span= 5.00-20.00 hrs, dt= 0.05 hrs
Type III 24-hr WQ Rainfall=1.00"

	Area (sf)	CN	Description
*	1,650	98	Paved acccess drive, HSG D
	751	98	Roofs, HSG D
*	6,955	88	Sand beach, HSG D
	3,872	96	Gravel surface, HSG D
	45,951	77	Woods, Good, HSG D
	59,179	80	Weighted Average
	56,778		95.94% Pervious Area
	2,401		4.06% Impervious Area

Tc (min)	Length (feet)	Slope (ft/ft)	Velocity (ft/sec)	Capacity (cfs)	Description
2.7	23	0.1740	0.14		**Sheet Flow, Tc-1** Woods: Light underbrush n= 0.400 P2= 3.30"
1.0	70	0.0574	1.20		**Shallow Concentrated Flow, Tc-2** Woodland Kv= 5.0 fps
0.5	170	0.1059	5.24		**Shallow Concentrated Flow, Tc-3** Unpaved Kv= 16.1 fps
2.5	140	0.0357	0.94		**Shallow Concentrated Flow, Tc-4** Woodland Kv= 5.0 fps
0.3	42	0.0714	2.67		**Shallow Concentrated Flow, Tc-5** Nearly Bare & Untilled Kv= 10.0 fps
7.0	445	Total			

Subcatchment 5S: Post Subcatchment 5

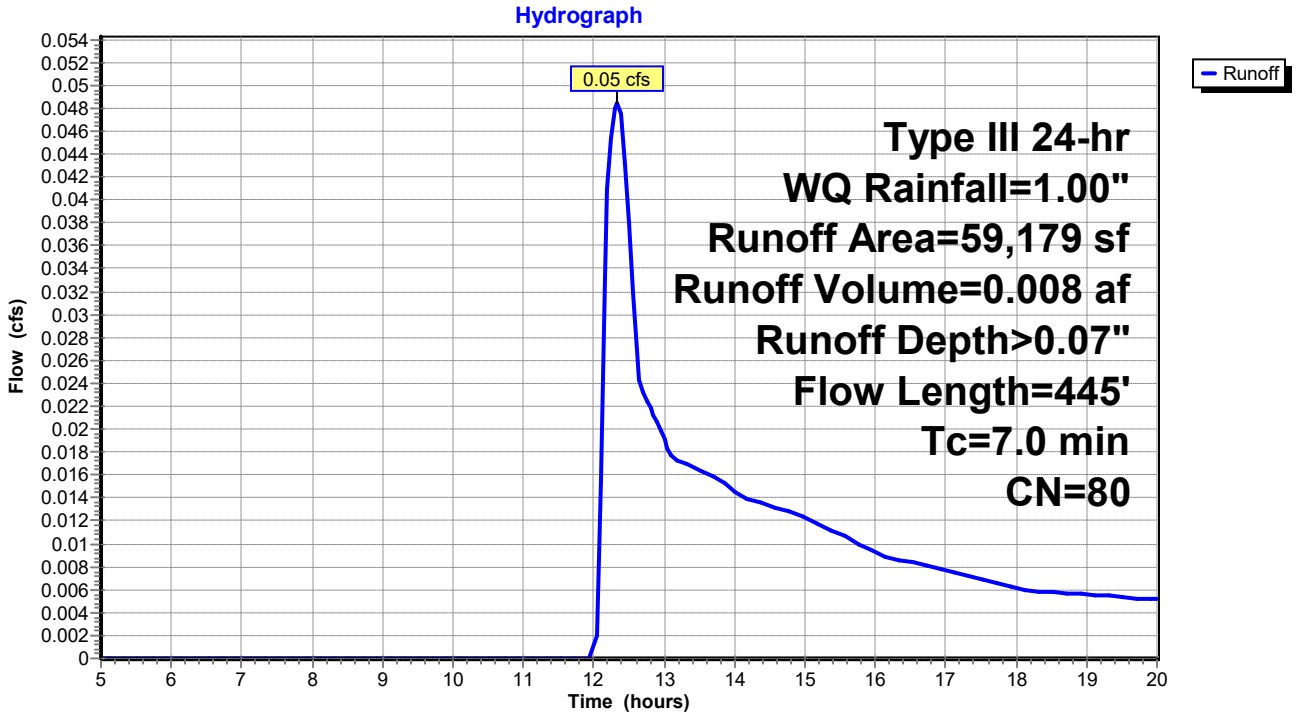

Summary for Reach 1R: Reach 1

Inflow Area = 0.226 ac, 50.01% Impervious, Inflow Depth > 0.14" for WQ event
Inflow = 0.02 cfs @ 12.36 hrs, Volume= 0.003 af
Outflow = 0.02 cfs @ 12.36 hrs, Volume= 0.003 af, Atten= 0%, Lag= 0.0 min
Routed to Link DP1 : DP1

Routing by Stor-Ind method, Time Span= 5.00-20.00 hrs, dt= 0.05 hrs

Reach 1R: Reach 1

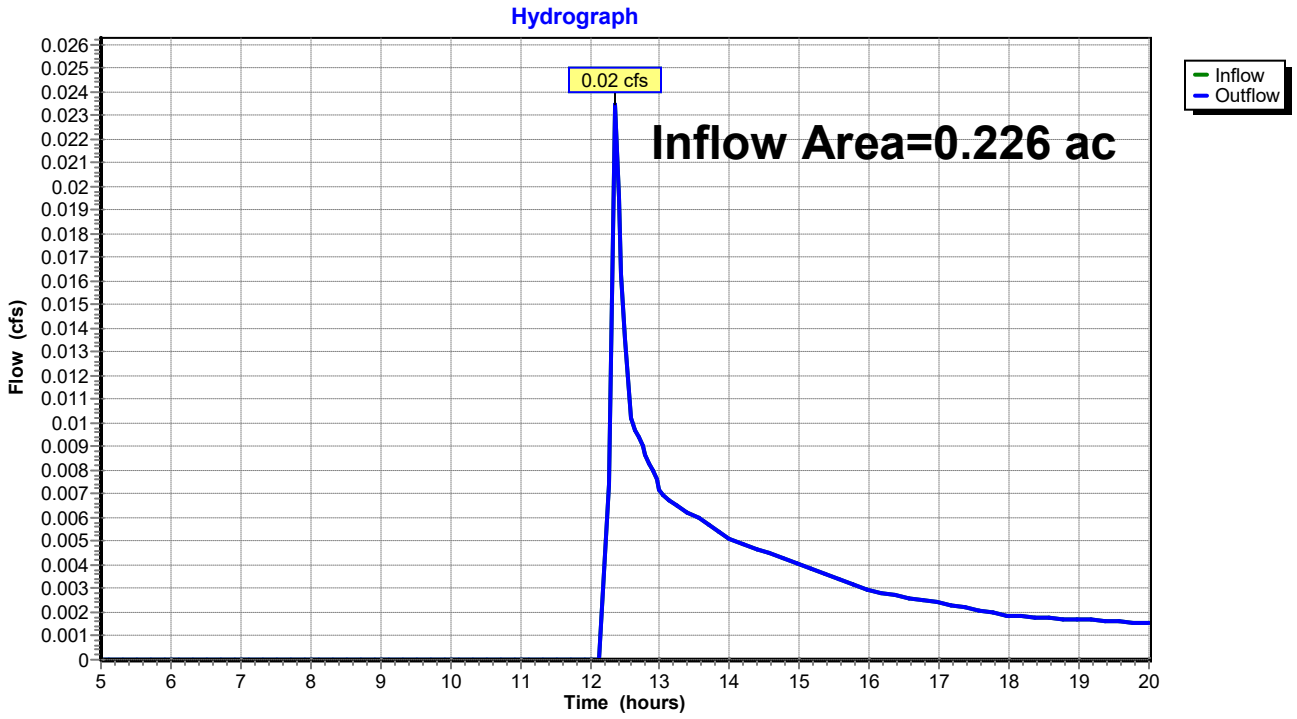

Summary for Reach 2R: Reach 2

Inflow Area = 0.307 ac, 33.49% Impervious, Inflow Depth = 0.00" for WQ event
Inflow = 0.00 cfs @ 5.00 hrs, Volume= 0.000 af
Outflow = 0.00 cfs @ 5.00 hrs, Volume= 0.000 af, Atten= 0%, Lag= 0.0 min
Routed to Link DP2 : DP2

Routing by Stor-Ind method, Time Span= 5.00-20.00 hrs, dt= 0.05 hrs

Reach 2R: Reach 2

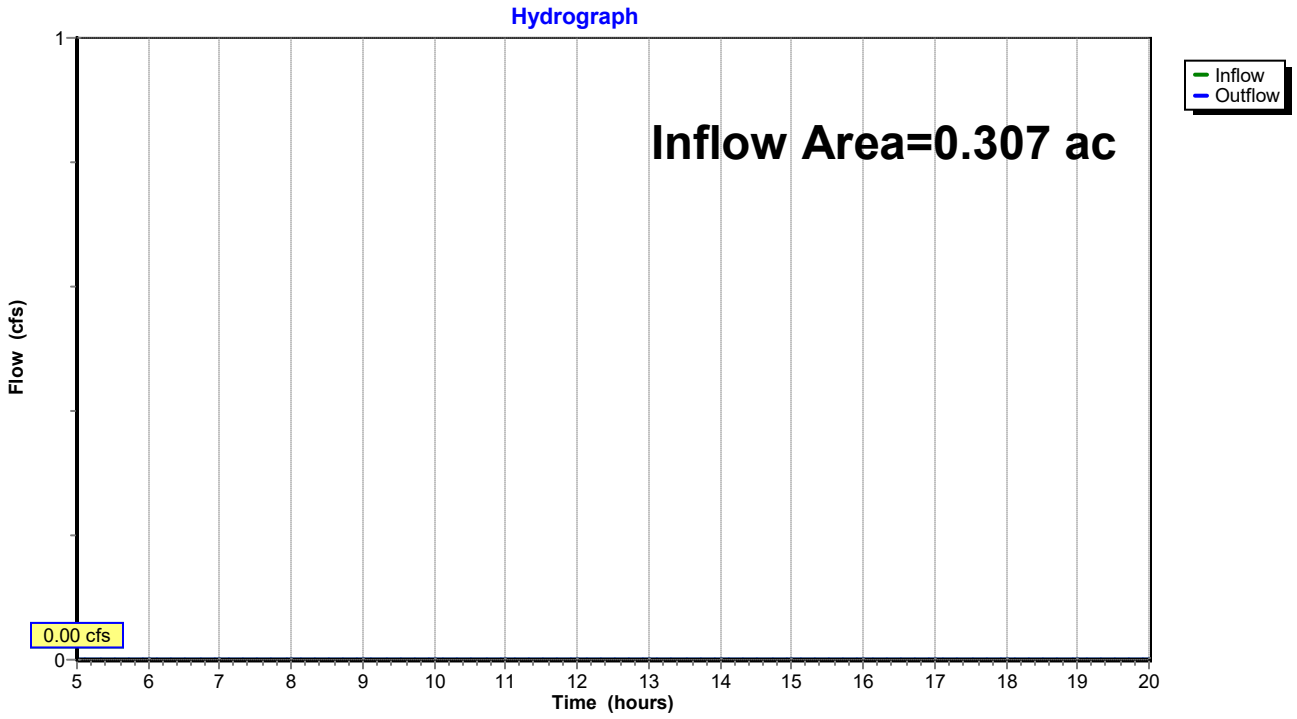

Summary for Reach DP3: Shoreline 3

Inflow Area = 1.359 ac, 4.06% Impervious, Inflow Depth > 0.07" for WQ event
Inflow = 0.05 cfs @ 12.34 hrs, Volume= 0.008 af
Outflow = 0.05 cfs @ 12.34 hrs, Volume= 0.008 af, Atten= 0%, Lag= 0.0 min
Routed to Reach SP1 : SACO RIVER / OCEAN

Routing by Stor-Ind method, Time Span= 5.00-20.00 hrs, dt= 0.05 hrs

Reach DP3: Shoreline 3

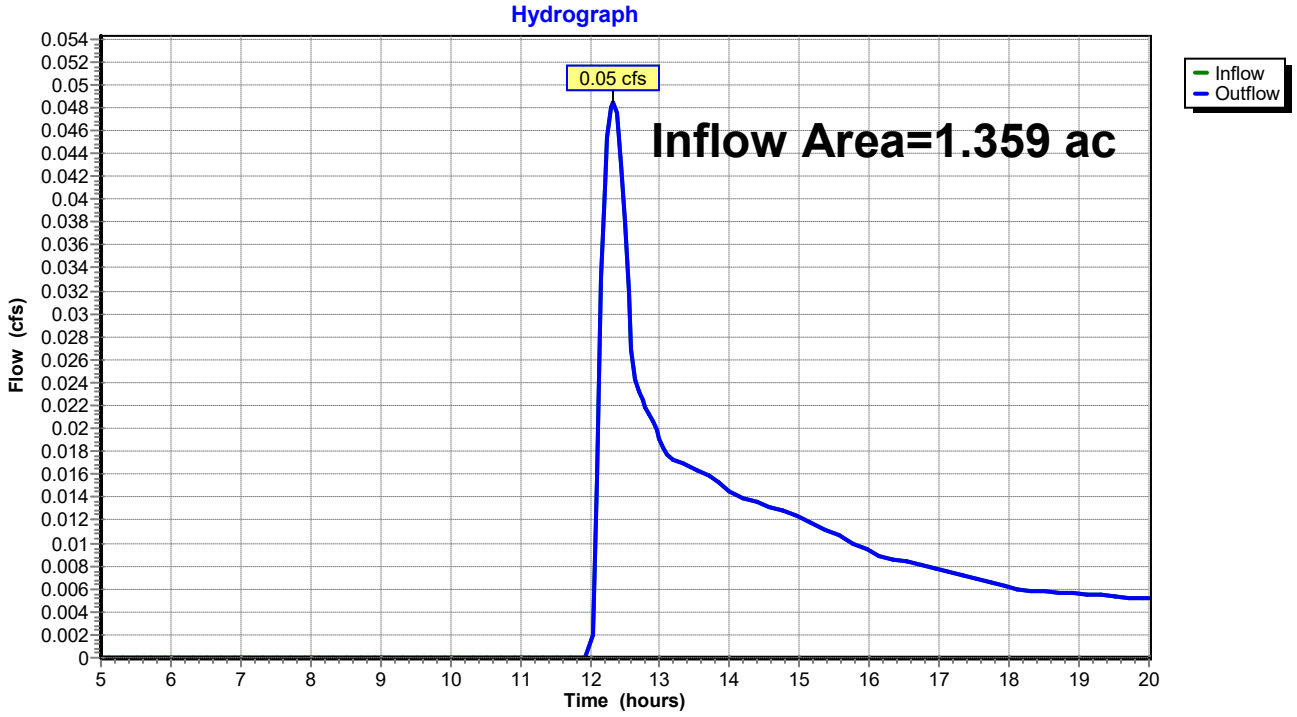

Summary for Reach SP1: SACO RIVER / OCEAN

Inflow Area = 2.557 ac, 11.96% Impervious, Inflow Depth > 0.06" for WQ event
Inflow = 0.09 cfs @ 12.36 hrs, Volume= 0.014 af
Outflow = 0.09 cfs @ 12.36 hrs, Volume= 0.014 af, Atten= 0%, Lag= 0.0 min

Routing by Stor-Ind method, Time Span= 5.00-20.00 hrs, dt= 0.05 hrs

Reach SP1: SACO RIVER / OCEAN

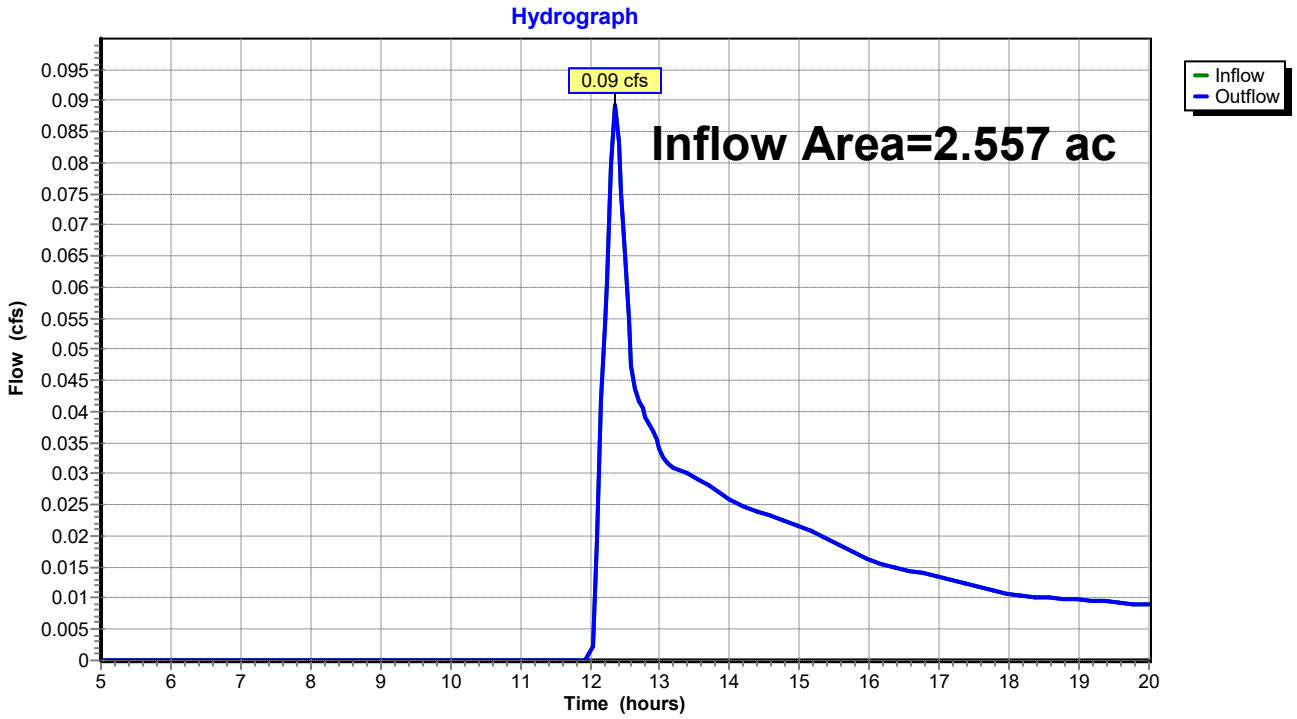

Summary for Pond 1P: Bioretention Filter Cell 1

Inflow Area = 0.226 ac, 50.01% Impervious, Inflow Depth > 0.20" for WQ event
Inflow = 0.06 cfs @ 12.03 hrs, Volume= 0.004 af
Outflow = 0.02 cfs @ 12.36 hrs, Volume= 0.003 af, Atten= 58%, Lag= 19.8 min
Primary = 0.02 cfs @ 12.36 hrs, Volume= 0.003 af
Routed to Pond 2P : CB-1

Routing by Stor-Ind method, Time Span= 5.00-20.00 hrs, dt= 0.05 hrs
Peak Elev= 18.01' @ 12.36 hrs Surf.Area= 217 sf Storage= 56 cf

Plug-Flow detention time= 130.6 min calculated for 0.003 af (67% of inflow)
Center-of-Mass det. time= 53.4 min (884.3 - 831.0)

Volume	Invert	Avail.Storage	Storage Description
#1	17.50'	200 cf	**Custom Stage Data (Prismatic)** Listed below (Recalc)

Elevation (feet)	Surf.Area (sq-ft)	Inc.Store (cubic-feet)	Cum.Store (cubic-feet)
17.50	0	0	0
18.00	213	53	53
18.50	372	146	200

Device	Routing	Invert	Outlet Devices
#1	Primary	18.00'	**18.0" Horiz. Orifice/Grate** C= 0.600 in 24.0" Grate (56% open area) Limited to weir flow at low heads

Primary OutFlow Max=0.02 cfs @ 12.36 hrs HW=18.01' (Free Discharge)
↑—**1=Orifice/Grate** (Weir Controls 0.02 cfs @ 0.37 fps)

Pond 1P: Bioretention Filter Cell 1

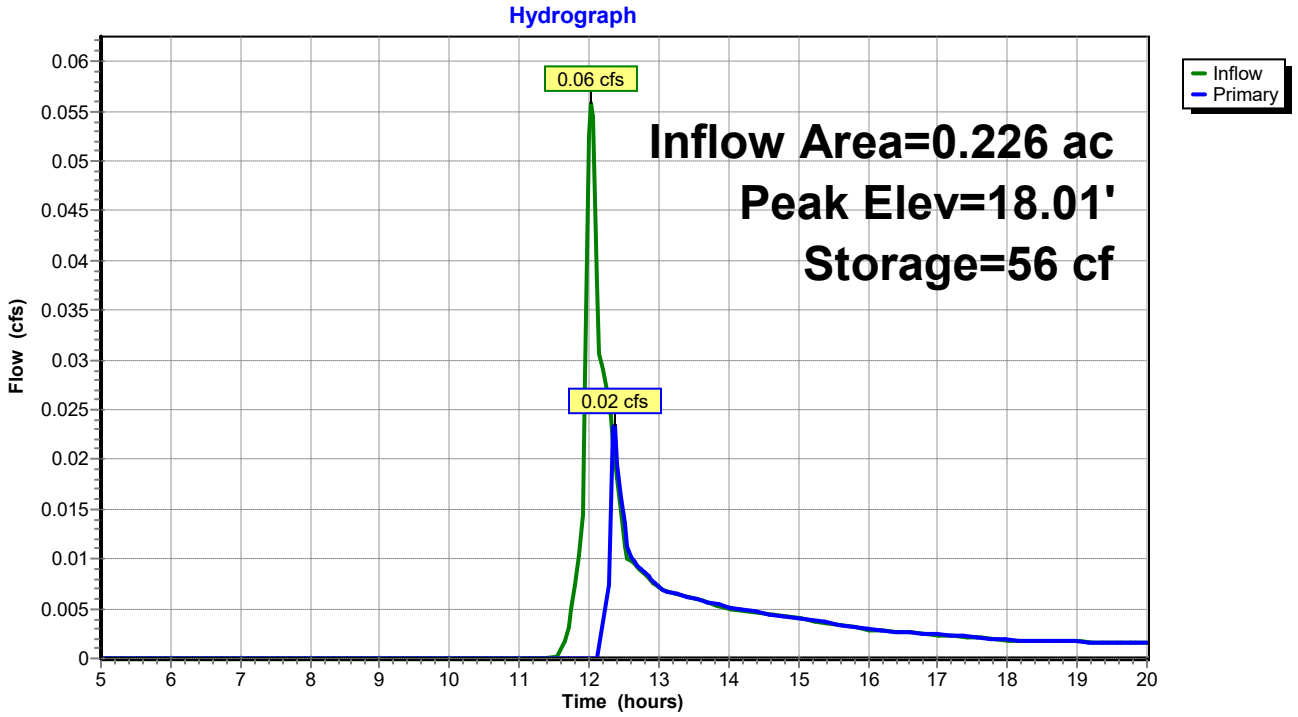

Summary for Pond 2P: CB-1

Inflow Area = 0.226 ac, 50.01% Impervious, Inflow Depth > 0.14" for WQ event
Inflow = 0.02 cfs @ 12.36 hrs, Volume= 0.003 af
Outflow = 0.02 cfs @ 12.36 hrs, Volume= 0.003 af, Atten= 0%, Lag= 0.0 min
Primary = 0.02 cfs @ 12.36 hrs, Volume= 0.003 af
Routed to Reach 1R : Reach 1

Routing by Stor-Ind method, Time Span= 5.00-20.00 hrs, dt= 0.05 hrs
Peak Elev= 13.83' @ 12.36 hrs

Device	Routing	Invert	Outlet Devices
#1	Primary	13.75'	**15.0" Round Culvert** L= 48.0' CPP, projecting, no headwall, Ke= 0.900 Inlet / Outlet Invert= 13.75' / 12.00' S= 0.0365 '/' Cc= 0.900 n= 0.013 Corrugated PE, smooth interior, Flow Area= 1.23 sf

Primary OutFlow Max=0.02 cfs @ 12.36 hrs HW=13.83' (Free Discharge)
1=Culvert (Inlet Controls 0.02 cfs @ 0.74 fps)

Pond 2P: CB-1

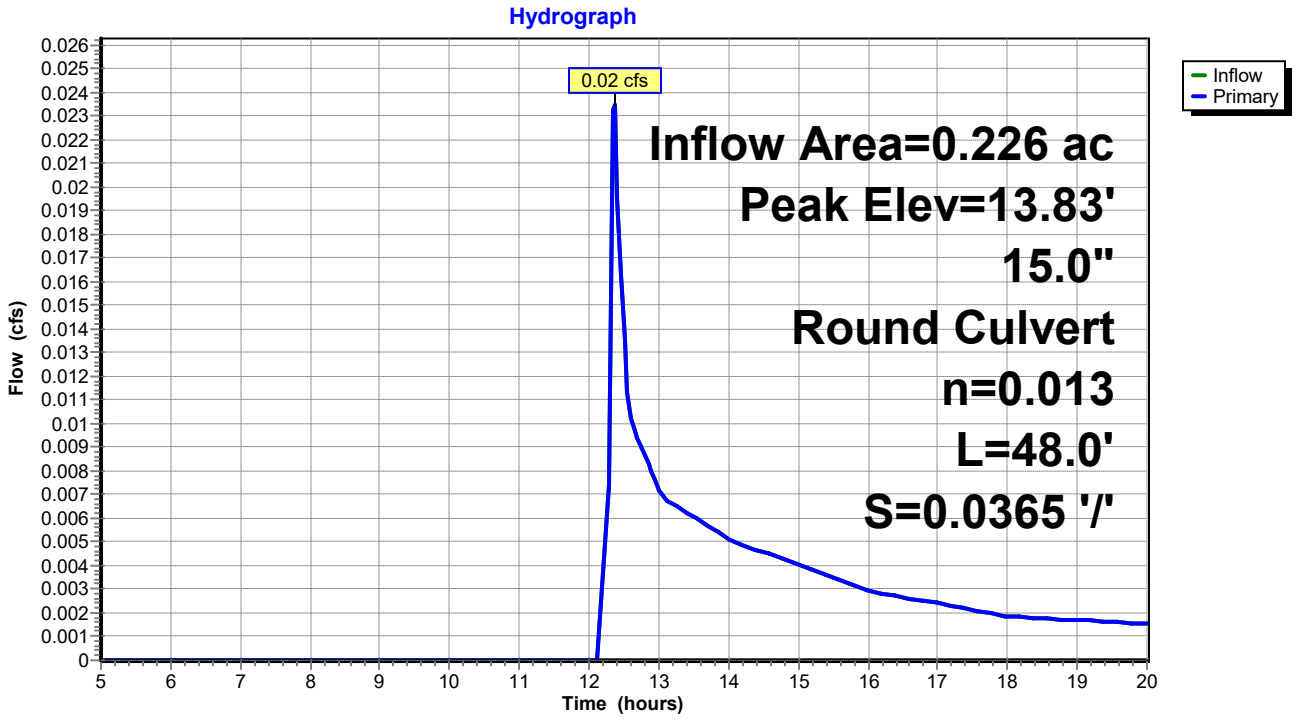

Summary for Pond 3P: Bioretention Filter Cell 2

Inflow Area = 0.307 ac, 33.49% Impervious, Inflow Depth > 0.13" for WQ event
Inflow = 0.04 cfs @ 12.11 hrs, Volume= 0.003 af
Outflow = 0.02 cfs @ 12.48 hrs, Volume= 0.002 af, Atten= 56%, Lag= 22.5 min
Primary = 0.02 cfs @ 12.48 hrs, Volume= 0.002 af
Routed to Pond 4P : CB-2

Routing by Stor-Ind method, Time Span= 5.00-20.00 hrs, dt= 0.05 hrs
Peak Elev= 23.51' @ 12.48 hrs Surf.Area= 171 sf Storage= 44 cf

Plug-Flow detention time= 120.8 min calculated for 0.002 af (72% of inflow)
Center-of-Mass det. time= 48.7 min (900.5 - 851.8)

Volume	Invert	Avail.Storage	Storage Description
#1	23.00'	380 cf	**Custom Stage Data (Prismatic)** Listed below (Recalc)

Elevation (feet)	Surf.Area (sq-ft)	Inc.Store (cubic-feet)	Cum.Store (cubic-feet)
23.00	0	0	0
24.00	335	168	168
24.50	515	213	380

Device	Routing	Invert	Outlet Devices
#1	Primary	23.50'	**18.0" Horiz. Orifice/Grate** C= 0.600 in 24.0" Grate (56% open area) Limited to weir flow at low heads

Primary OutFlow Max=0.02 cfs @ 12.48 hrs HW=23.51' (Free Discharge)
↑**1=Orifice/Grate** (Weir Controls 0.02 cfs @ 0.33 fps)

Pond 3P: Bioretention Filter Cell 2

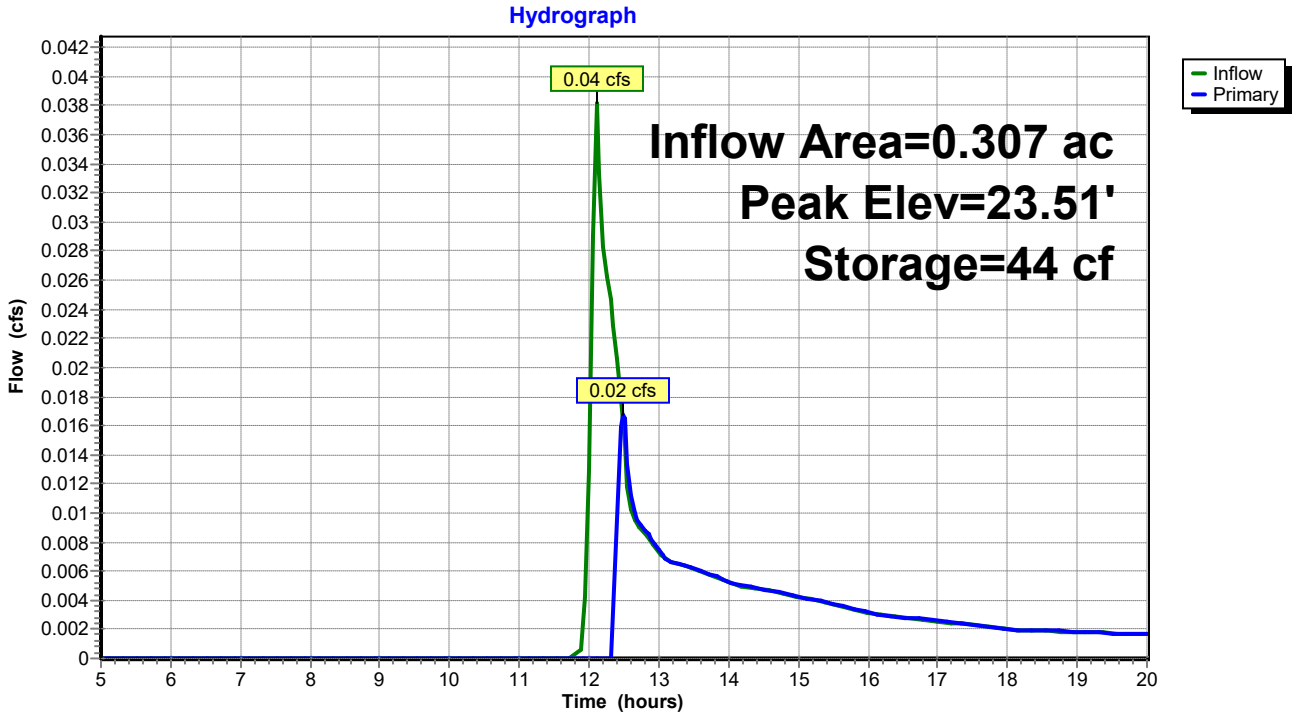

Summary for Pond 4P: CB-2

Inflow Area = 0.307 ac, 33.49% Impervious, Inflow Depth > 0.10" for WQ event
Inflow = 0.02 cfs @ 12.48 hrs, Volume= 0.002 af
Outflow = 0.02 cfs @ 12.48 hrs, Volume= 0.002 af, Atten= 0%, Lag= 0.0 min
Primary = 0.02 cfs @ 12.48 hrs, Volume= 0.002 af
Routed to Pond 5P : Level Lip Speader

Routing by Stor-Ind method, Time Span= 5.00-20.00 hrs, dt= 0.05 hrs
Peak Elev= 18.81' @ 12.48 hrs

Device	Routing	Invert	Outlet Devices
#1	Primary	18.75'	**18.0" Round Culvert** L= 40.0' CPP, projecting, no headwall, Ke= 0.900 Inlet / Outlet Invert= 18.75' / 18.00' S= 0.0187 '/' Cc= 0.900 n= 0.013 Corrugated PE, smooth interior, Flow Area= 1.77 sf

Primary OutFlow Max=0.02 cfs @ 12.48 hrs HW=18.81' (Free Discharge)
1=Culvert (Inlet Controls 0.02 cfs @ 0.66 fps)

Pond 4P: CB-2

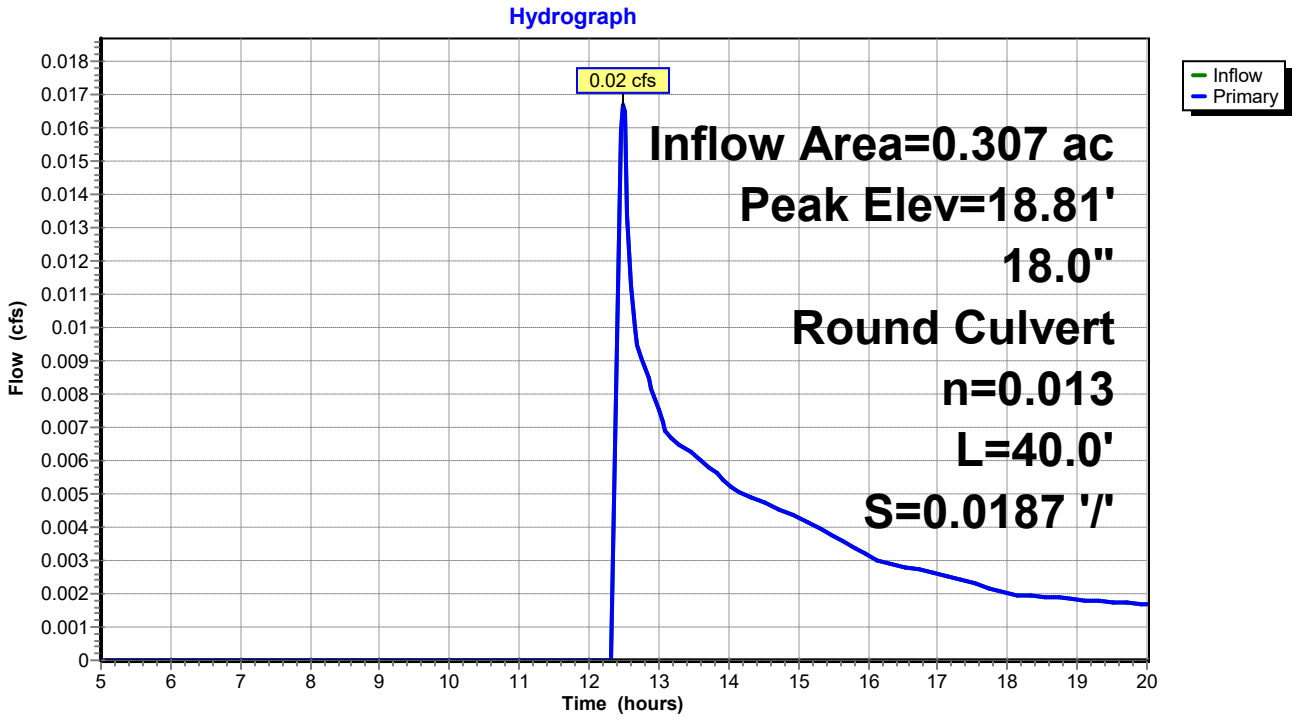

Summary for Pond 5P: Level Lip Speader

Inflow Area = 0.307 ac, 33.49% Impervious, Inflow Depth > 0.10" for WQ event
Inflow = 0.02 cfs @ 12.48 hrs, Volume= 0.002 af
Outflow = 0.00 cfs @ 5.00 hrs, Volume= 0.000 af, Atten= 100%, Lag= 0.0 min
Primary = 0.00 cfs @ 5.00 hrs, Volume= 0.000 af
Routed to Reach 2R : Reach 2

Routing by Stor-Ind method, Time Span= 5.00-20.00 hrs, dt= 0.05 hrs
Peak Elev= 17.95' @ 20.00 hrs Surf.Area= 163 sf Storage= 106 cf
Flood Elev= 20.00' Surf.Area= 168 sf Storage= 115 cf

Plug-Flow detention time= (not calculated: initial storage exceeds outflow)
Center-of-Mass det. time= (not calculated: no outflow)

Volume	Invert	Avail.Storage	Storage Description
#1	17.00'	115 cf	**Custom Stage Data (Prismatic)** Listed below (Recalc)

Elevation (feet)	Surf.Area (sq-ft)	Voids (%)	Inc.Store (cubic-feet)	Cum.Store (cubic-feet)
17.00	61	0.0	0	0
18.00	168	100.0	115	115

Device	Routing	Invert	Outlet Devices
#0	Primary	18.00'	**Automatic Storage Overflow** (Discharged without head)

Primary OutFlow Max=0.00 cfs @ 5.00 hrs HW=17.00' (Free Discharge)

Pond 5P: Level Lip Speader

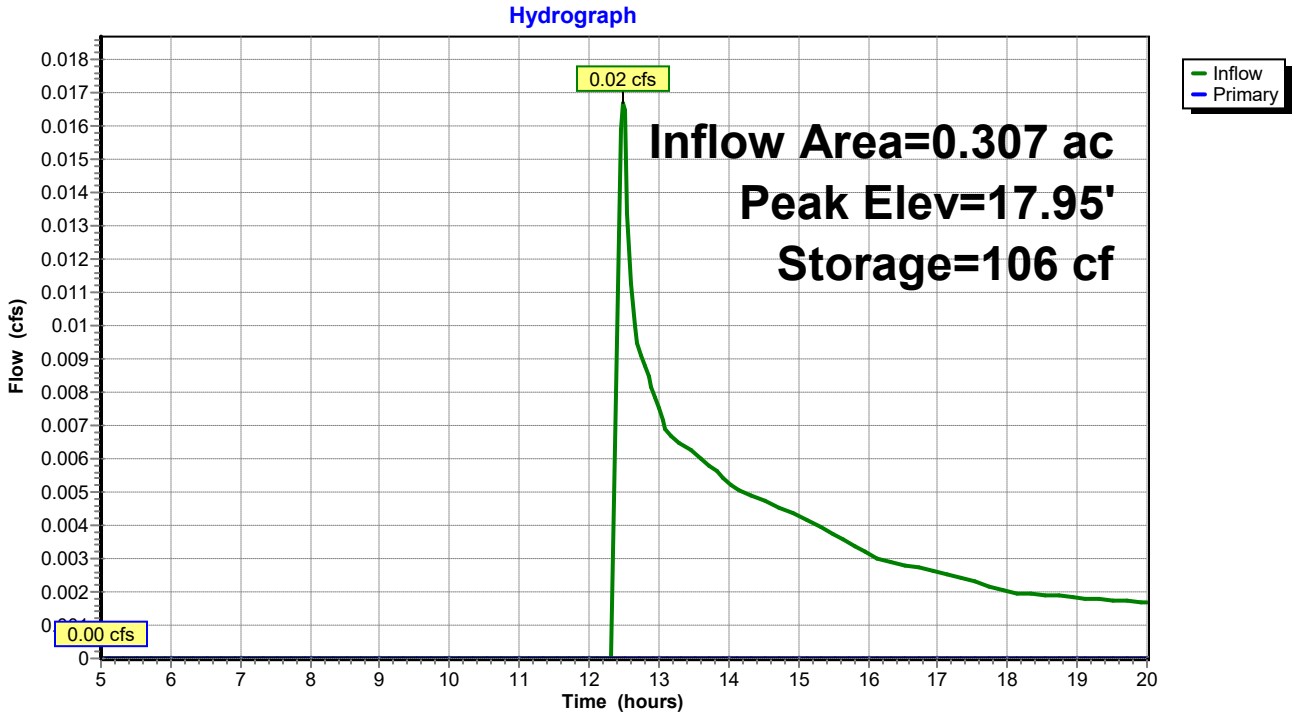

Summary for Link DP1: DP1

Inflow Area = 0.489 ac, 28.87% Impervious, Inflow Depth > 0.09" for WQ event
Inflow = 0.03 cfs @ 12.36 hrs, Volume= 0.004 af
Primary = 0.03 cfs @ 12.36 hrs, Volume= 0.004 af, Atten= 0%, Lag= 0.0 min
Routed to Reach SP1 : SACO RIVER / OCEAN

Primary outflow = Inflow, Time Span= 5.00-20.00 hrs, dt= 0.05 hrs

Link DP1: DP1

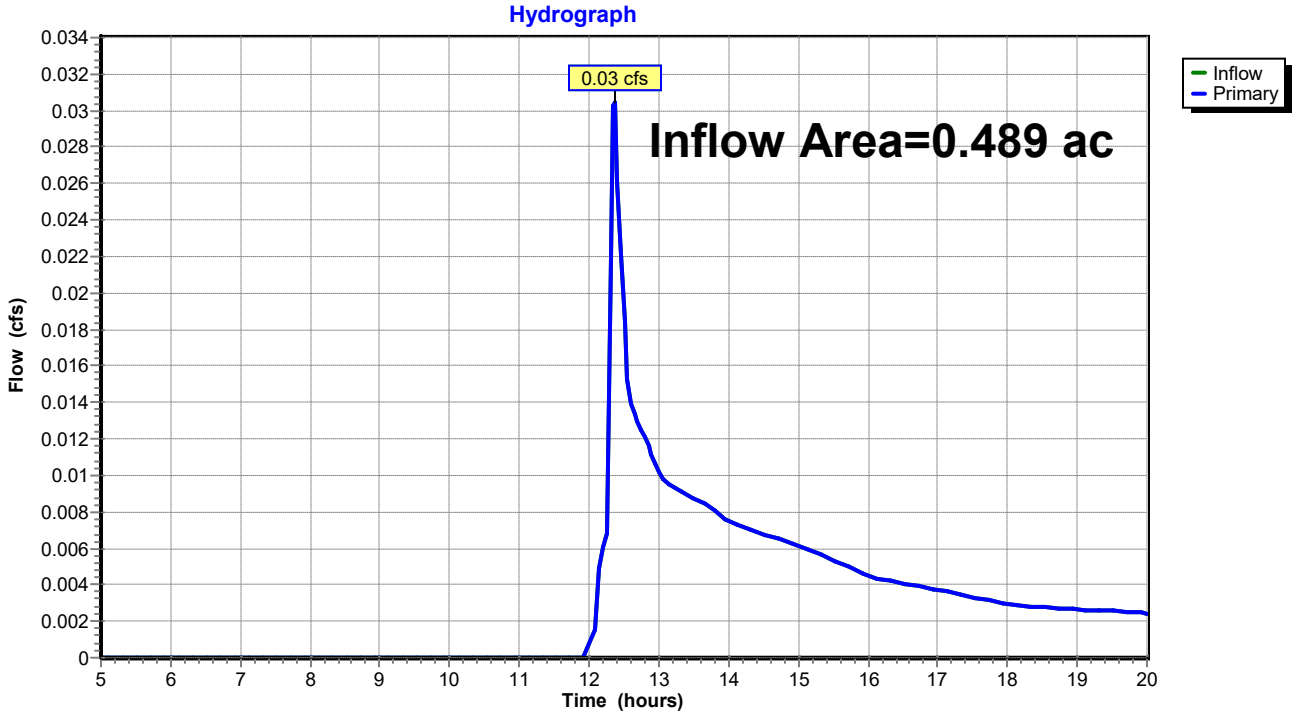

Summary for Link DP2: DP2

Inflow Area = 0.709 ac, 15.44% Impervious, Inflow Depth > 0.03" for WQ event
Inflow = 0.01 cfs @ 12.38 hrs, Volume= 0.002 af
Primary = 0.01 cfs @ 12.38 hrs, Volume= 0.002 af, Atten= 0%, Lag= 0.0 min
Routed to Reach SP1 : SACO RIVER / OCEAN

Primary outflow = Inflow, Time Span= 5.00-20.00 hrs, dt= 0.05 hrs

Link DP2: DP2

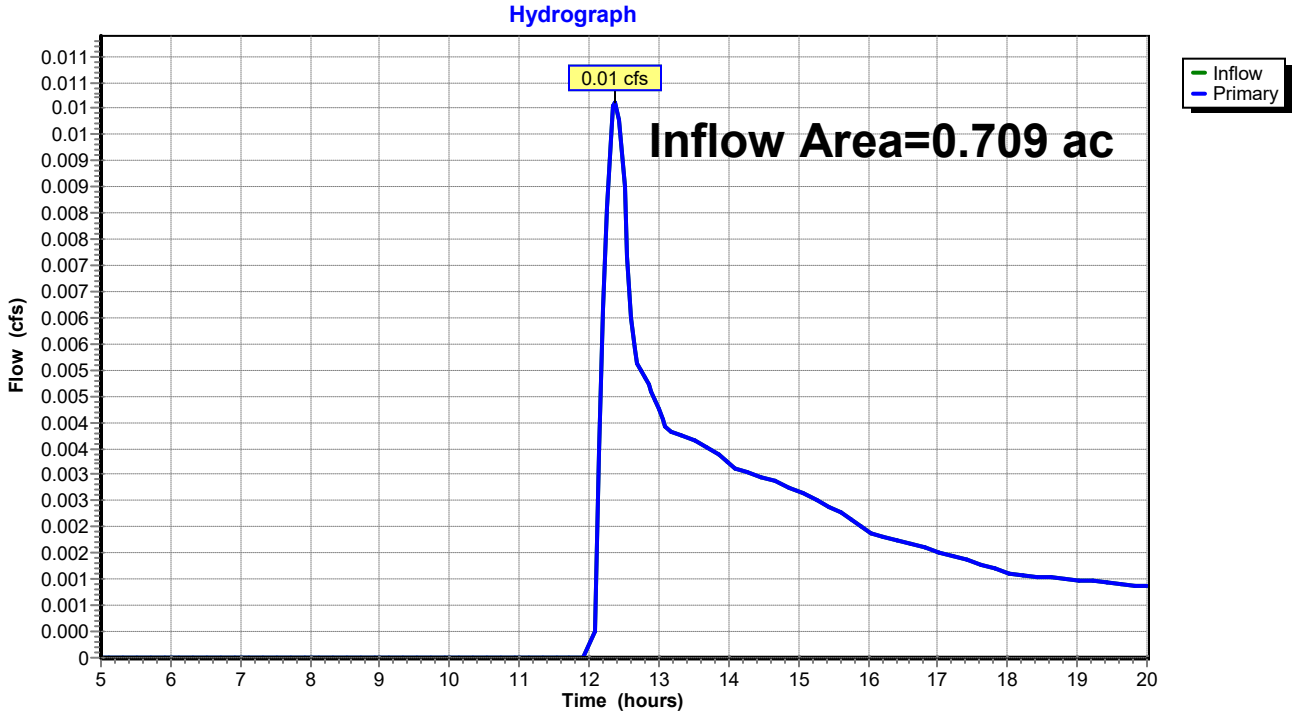

TABLE OF CONTENTS

Project Reports
1 Routing Diagram
2 Project Notes
3 Rainfall Events Listing
4 Area Listing (all nodes)
5 Soil Listing (all nodes)
6 Ground Covers (all nodes)
7 Pipe Listing (all nodes)

2-yr Event
8 Node Listing
10 Subcat 1S: Post Subcatchment 1
12 Subcat 2S: Post Subcatchment 2
13 Subcat 3S: Post Subcatchment 3
15 Subcat 4S: Post Subcatchment 4
16 Subcat 5S: Post Subcatchment 5
18 Reach 1R: Reach 1
19 Reach 2R: Reach 2
20 Reach DP3: Shoreline 3
21 Reach SP1: SACO RIVER / OCEAN
22 Pond 1P: Bioretention Filter Cell 1
24 Pond 2P: CB-1
25 Pond 3P: Bioretention Filter Cell 2
27 Pond 4P: CB-2
28 Pond 5P: Level Lip Speader
30 Link DP1: DP1
31 Link DP2: DP2

10-yr Event
32 Node Listing
34 Subcat 1S: Post Subcatchment 1
36 Subcat 2S: Post Subcatchment 2
37 Subcat 3S: Post Subcatchment 3
39 Subcat 4S: Post Subcatchment 4
40 Subcat 5S: Post Subcatchment 5
42 Reach 1R: Reach 1
43 Reach 2R: Reach 2
44 Reach DP3: Shoreline 3
45 Reach SP1: SACO RIVER / OCEAN
46 Pond 1P: Bioretention Filter Cell 1
48 Pond 2P: CB-1
49 Pond 3P: Bioretention Filter Cell 2
51 Pond 4P: CB-2
52 Pond 5P: Level Lip Speader
54 Link DP1: DP1
55 Link DP2: DP2

25-yr Event

56 Node Listing
58 Subcat 1S: Post Subcatchment 1
60 Subcat 2S: Post Subcatchment 2
61 Subcat 3S: Post Subcatchment 3
63 Subcat 4S: Post Subcatchment 4
64 Subcat 5S: Post Subcatchment 5
66 Reach 1R: Reach 1
67 Reach 2R: Reach 2
68 Reach DP3: Shoreline 3
69 Reach SP1: SACO RIVER / OCEAN
70 Pond 1P: Bioretention Filter Cell 1
72 Pond 2P: CB-1
73 Pond 3P: Bioretention Filter Cell 2
75 Pond 4P: CB-2
76 Pond 5P: Level Lip Speader
78 Link DP1: DP1
79 Link DP2: DP2

100-yr Event

80 Node Listing
82 Subcat 1S: Post Subcatchment 1
84 Subcat 2S: Post Subcatchment 2
85 Subcat 3S: Post Subcatchment 3
87 Subcat 4S: Post Subcatchment 4
88 Subcat 5S: Post Subcatchment 5
90 Reach 1R: Reach 1
91 Reach 2R: Reach 2
92 Reach DP3: Shoreline 3
93 Reach SP1: SACO RIVER / OCEAN
94 Pond 1P: Bioretention Filter Cell 1
96 Pond 2P: CB-1
97 Pond 3P: Bioretention Filter Cell 2
99 Pond 4P: CB-2
100 Pond 5P: Level Lip Speader
102 Link DP1: DP1
103 Link DP2: DP2

WQ Event

104 Node Listing
106 Subcat 1S: Post Subcatchment 1
108 Subcat 2S: Post Subcatchment 2
109 Subcat 3S: Post Subcatchment 3
111 Subcat 4S: Post Subcatchment 4
112 Subcat 5S: Post Subcatchment 5
114 Reach 1R: Reach 1
115 Reach 2R: Reach 2
116 Reach DP3: Shoreline 3

117 Reach SP1: SACO RIVER / OCEAN
118 Pond 1P: Bioretention Filter Cell 1
120 Pond 2P: CB-1
121 Pond 3P: Bioretention Filter Cell 2
123 Pond 4P: CB-2
124 Pond 5P: Level Lip Speader
126 Link DP1: DP1
127 Link DP2: DP2

Pipe Schedule
UNE Marine Sciene Center Pier
Biddeford, Maine

PROPOSED PIPES (BIORETENTION FILTER CELLS)

From	Inv	To	Inv	AREAS Paved 0.98	AREAS Open 'C' 0.61	AREAS Total (sf)	C	A (ac)	CA (ac)	ΣCA (ac)	Tc (min)	i25 (in/hr)	Q25 (req) (CFS)	Type	Pipe n	Leng (ft)	Dia (in)	Slope (%)	Vel ¼ Full (ft/sec)	Vel (ft/sec)	Q (prov) (CFS)	Q (Prov) > Q (Req'd)
SF-A	18.75	**18" Outfall**	18.00	3,935	5,897	9,832	FLOW FROM HYDROLOGY MODEL						1.33	HDPE	0.012	40	18	1.88%	6.18	8.82	15.58	good
SF-B	13.75	**15" Outfall**	12.00	3,768	9,597	13,365	FLOW FROM HYDROLOGY MODEL						1.56	HDPE	0.012	48	15	3.65%	7.63	10.89	13.36	good

Appendix D

Inspection and Maintenance Plan

Owner Responsible for Maintenance

All maintenance plans for stormwater management measures must include the following:

> The name, address, and telephone number of the person or persons responsible for the preventative and corrective maintenance of the stormwater management measure. If the plan identifies a party other than the owner or developer as having responsibility for maintenance, i.e., a public entity or homeowners' association, the plan must include a copy of the other party's written agreement to assume this responsibility. This agreement must include a copy of any ordinance or regulation that requires the owner or developer to dedicate the stormwater management measure and/or its maintenance to the other party.

Information of the Person Responsible for Maintenance:

Name:

Address:

Telephone:

If an entity other than the above listed property owner or the developer will have the responsibility for stormwater pond maintenance, then they will provide a copy of the designated party's written agreement to assume this responsibility.

University of New England
Biddeford, Maine
June 2025

INSPECTION AND MAINTENANCE PLAN OF STORMWATER MANAGEMENT FACILITIES

Stormwater Management Facilities include swales, paved surfaces, manholes and catch basins, drain pipe, riprapped aprons, level spreaders, wooded buffers, and bioretention filter cells. Periodic inspection and maintenance of these site features and devices is necessary to prevent erosion, protect roadways and other paved areas, and remove pollutants from stormwater runoff. Best management practices and stormwater facilities should be inspected as noted below, and after a rainfall event of 1" or more in 24 hours.

University of New England Facilities Department is responsible for the inspections and maintenance of stormwater facilities associated with this project.

SWALES, DITCHES, CURBS AND PAVED AREAS:

Swales, ditches, curbs and paved areas are easily inspected during a site walk or even a ride-by. Since visual inspection is easy, their condition should be assessed during and/or after significant rainfall events such as thunder showers and periods of heavy or extended rainfall and during periods of significant snowmelt. Any damage or unusual condition such as sedimentation of a ditch, erosion, damaged curb or dying vegetation should be recorded, dated and initialed by the inspector when observed. Even if there is no damage, the inspector should make record of these inspections at least twice annually.

Paved areas should be visually inspected monthly during the winter. The inspector should pay particular attention to the build up of sand around catch basin grates and remove accumulations that block the free flow of surface runoff to the catch basins. The date and initials of the inspector should be recorded on the forms provided as well as a notation of any cleanup effort that was made and the approximate volume of sand that was removed.

Open swales and ditches shall be inspected twice per year (in spring and fall) to assure that debris and/or sediments do not reduce the effectiveness of the system. Debris and sediments shall be removed at that time. Any sign of erosion or blockage shall be immediately repaired to assure a vigorous growth of vegetation for the stability of the ditches and slopes proper function. Maintenance shall include, but not be limited to, mowing, trimming and removal of vegetation in the ditches and slopes as required in order to prevent vegetation from blocking or diverting storm flows, replacement of riprap channel lining to prevent scour of the channel invert, removing vegetation and debris from the culverts.

Vegetated ditches should be mowed at least monthly during the growing season. Larger brush or trees must not be allowed to become established in the channel. Any areas where the vegetation fails will be subject to erosion and should be reseeded and mulched immediately.

CATCH BASINS, FIELD INLETS AND DRAIN MANHOLES:

Catch Basins and field inlets are precast concrete structures with sumps and cast iron grates used to collect stormwater and trap heavy sediments. Drain Manholes are similar structures constructed with a channel instead of a sump and a solid cast iron cover instead of a grate. Drain Manholes exist at changes in direction and/or size of storm drain pipe. Catch Basins, field inlets and drain manholes provide access to the closed storm drain system for inspection and maintenance.

Throughout the winter / spring sanding period, inspect catch basins and field inlets monthly and after every significant rainfall event or period of heavy snowmelt. Clean catch basin and field inlet sumps when sediment level is within 12 inches of the outlet pipe invert. At a minimum, remove floating debris and hydrocarbons at the time of the inspection. The removed material must be disposed of in accordance with the Maine Solid Waste Disposal Rules. Confined space entry safety procedures shall be practiced should entry into these structures be required.

Record dates of inspections, observations and maintenance measures implemented (if any) on the forms provided and initial the entry.

DRAIN PIPES:

Drain pipes are road culverts and pipes connecting drain manholes. Inspect drain pipes when inspecting other stormwater maintenance facilities. At least annually make a visual inspection of the pipe. During the daylight you should be able to see light through most pipes as they have been laid to a straight line and grade. In some cases (e.g. pipe runs to a drain manhole, or is blocked) you will need a light to inspect pipes.

Remove any obstructions to flow; remove accumulated sediments and debris at the inlet, at the outlet, and within the conduit; and to repair any erosion damage at the pipe inlet and outlet. Sediment should be removed when its level exceeds 20% of the pipe diameter. This may be accomplished by hydraulic flushing or any mechanical means; however, care should be taken to contain the sediment at the pipe outlet, and not flush the sediments into the stormwater filter or wetland areas.

Riprap aprons where stone is displaced should be replaced and chinked to assure stability. With time, additional riprap may be added. Vegetation growing through riprap should be removed on an annual basis.

Record inspections on the forms provided noting condition of pipe and any maintenance procedures implemented.

LEVEL SPREADERS:

Level Spreaders are shallow basins or ditches constructed at the ends of ditches or pipe outlets to disperse or "spread" concentrated flow thinly over a receiving area. Level Spreaders are constructed along the natural contour of the land to create a level "lip" on the outlet side. The integrity of the level lip is critical to the proper performance of this device.

Inspect the Level Spreader at least once each season and following significant rainfall events (1 inch or more of rain in 12 hours). Record inspections on the forms provided noting your observations and any corrective action taken. Any sign of erosion or blockage shall be immediately repaired to assure a vigorous growth of vegetation and stability of stone berms for the stability of the level spreader for proper function. Minor regrading, releveling of the stone “lip,” and reseeding

of the level lip on an annual basis should be anticipated. Mow level lips at least twice during the growing season. Maintenance may also include removal of sediment buildup especially on the inlet end.

BIORETENTION FILTER CELLS:

A bioretention filter cells is a landscaped depression with an under drained soil bed or soil filter that exfiltrates the stormwater. The depression is designed to temporarily store runoff, which will drain through the soil filter into the underdrains; excess runoff will flow into structures or over earthen spillways.

Soil Filter Inspection: The soil filter should be inspected after every major storm in the first few months to ensure proper function. Thereafter, the filter should be inspected at least once every six months to ensure that it is draining within 48 hours; and that, after storms that fill the system to overflow, it drains in no less than 24 hours. If the filter drains too rapidly, (i.e. prior to 24 hours), then an adjustable orifice shall be installed on the underdrain outlet pipe. The orifice shall be adjusted such that the filter completely drains within 24 to 72 hours.

Underdrain System: The soil filter outlet consists of a layer of planting loam and sand with a stone and perforated pipe underdrain. Outlet inspections shall include flushing of the underdrain through the cleanouts at the end of the pipes. Trash, sediment, and debris shall be removed from the vicinity of the outlet and must be disposed of in accordance with the Maine Solid Waste Disposal Rules.

Soil Filter Replacement: If the filter fails to drain within 72 hours, the surface of the pond shall be rototilled to promote aeration of the filter media and vegetation shall be re-established. If aeration of the surface soil fails to promote filtration of impounded water within 72 hours, then the filter media shall be replaced as necessary. The stone underdrain shall also be replaced at this time, along with the perforated pipe.

Sediment Removal: Sediment and plant debris should be removed from the pretreatment structure at least annually.

Mowing: Filters with grass cover should be mowed no more than 2 times per growing season to maintain grass heights less than 12 inches.

Fertilization: Fertilization of the bioretention filter cells should be avoided unless absolutely necessary to establish vegetation.

Harvesting and Weeding: Harvesting and pruning of excessive growth will need to be done occasionally. Weeding to control unwanted or invasive plants may also be necessary. Add new mulch as necessary for bioretention cells.

Bioretention Filter Cells shall not be used for snow storage area. Vehicular equipment used to maintain or rehabilitate Bioretention Filter Cells should work from the basin perimeter and not enter the basin area, as this will compact the soil surface and reduce the design infiltration rate. Record all maintenance on forms provided.

SEDIMENT DISPOSAL:

Any sediment or debris removed during maintenance of the stormwater system must be disposed of in accordance with the Maine Solid Waste Disposal Rules.

UNIVERSITY OF NEW ENGLAND
BIDDEFORD, MAINE

INSPECTION / MAINTENANCE LOG

SWALES, DITCHES, CURBS AND PAVED SURFACES

I: INSPECTED - C: CLEANED - S: SWEPT - R: REPAIRED

DATE	INITIALS	ACTION	COMMENT
5/10/19	RST	I, C	EXAMPLE: Removed sand around CB's 19 and 20. Heavy rain over the weekend.

UNIVERSITY OF NEW ENGLAND
BIDDEFORD, MAINE

INSPECTION / MAINTENANCE LOG

CATCH BASINS, FIELD INLETS, AND DRAIN MANHOLES

I: INSPECTED - C: CLEANED - R: REPAIRED

DATE	INITIALS	ACTION	COMMENT
6/13/19	JKL	I, C	EXAMPLE: Called ACME to clean catch basins.

UNIVERSITY OF NEW ENGLAND

BIDDEFORD, MAINE

INSPECTION / MAINTENANCE LOG

DRAIN PIPES

I: INSPECTED - C: CLEANED - R: REPAIRED

DATE	INITIALS	ACTION	COMMENT
4/19/18	JKL	I, C	EXAMPLE: Called ACME to clean debris from culvert inlets along Main Road and Loop Road.

UNIVERSITY OF NEW ENGLAND

BIDDEFORD, MAINE

INSPECTION / MAINTENANCE LOG

LEVEL SPREADERS

I: INSPECTED - C: CLEANED - R: REPAIRED

DATE	INITIALS	ACTION	COMMENT
8/16/19	JKL	I, C	EXAMPLE: Inspected level spreaders on site, found minimal sediment build up, stone lips appeared consistently level and functional. Mowed level lips.

UNIVERSITY OF NEW ENGLAND

BIDDEFORD, MAINE

INSPECTION / MAINTENANCE LOG

BIORETENTION FILTER CELLS

I: INSPECTED - C: CLEANED - R: REPAIRED

DATE	INITIALS	Unit #	ACTION	COMMENT
7/6/19	PQR	LA2	I, C	EXAMPLE: Cleared sediment and plant debris from inlet area, mowed filter area, crest, and sideslopes.

STORMWATER MANAGEMENT SYSTEM
MAINTENANCE PROGRAM
SUMMARY CHECKLIST

Item	Commentary	Frequency			
		Month	Semi-Annual	Annual	Long-Term
All Pond and Filter side slopes	Inspect slopes for sloughing, erosion or undesirable tree growth. Mow slopes to control vegetation, repair any structure flaws identified	**X Mow Summer**		**X**	
All Pond and Filter Sediment Removal	Remove sediment when it occupies 15% of volume.				**X 5 Years**
Open Swale, Ditches & Inlet Structures	Inspect for debris accumulation, erosion and excessive vegetation. Mow monthly, remove debris, repair and revegetate any area of erosion	**X Mow**		**X**	
Pavement	Review for damage and buildup of debris and sand.	**X**	**X Sweep**		
Level Spreaders	Review level lip for stability and grass growth, remove sediment and debris		**X**		
Catchbasin and Drain Manholes	Inspect grates to assure optimum water flows into the structures. Inspect sumps for blockage and sediment accumulation. Clean out sumps .	**X Inspect**		**X Sediment removal**	
Pipelines	Inspect for sediment build-up in pipe. Flush and remove as required.			**X**	
Bioretention Filter Cells	Mow twice per year. Inspect for erosion.		**X**		

Drawings

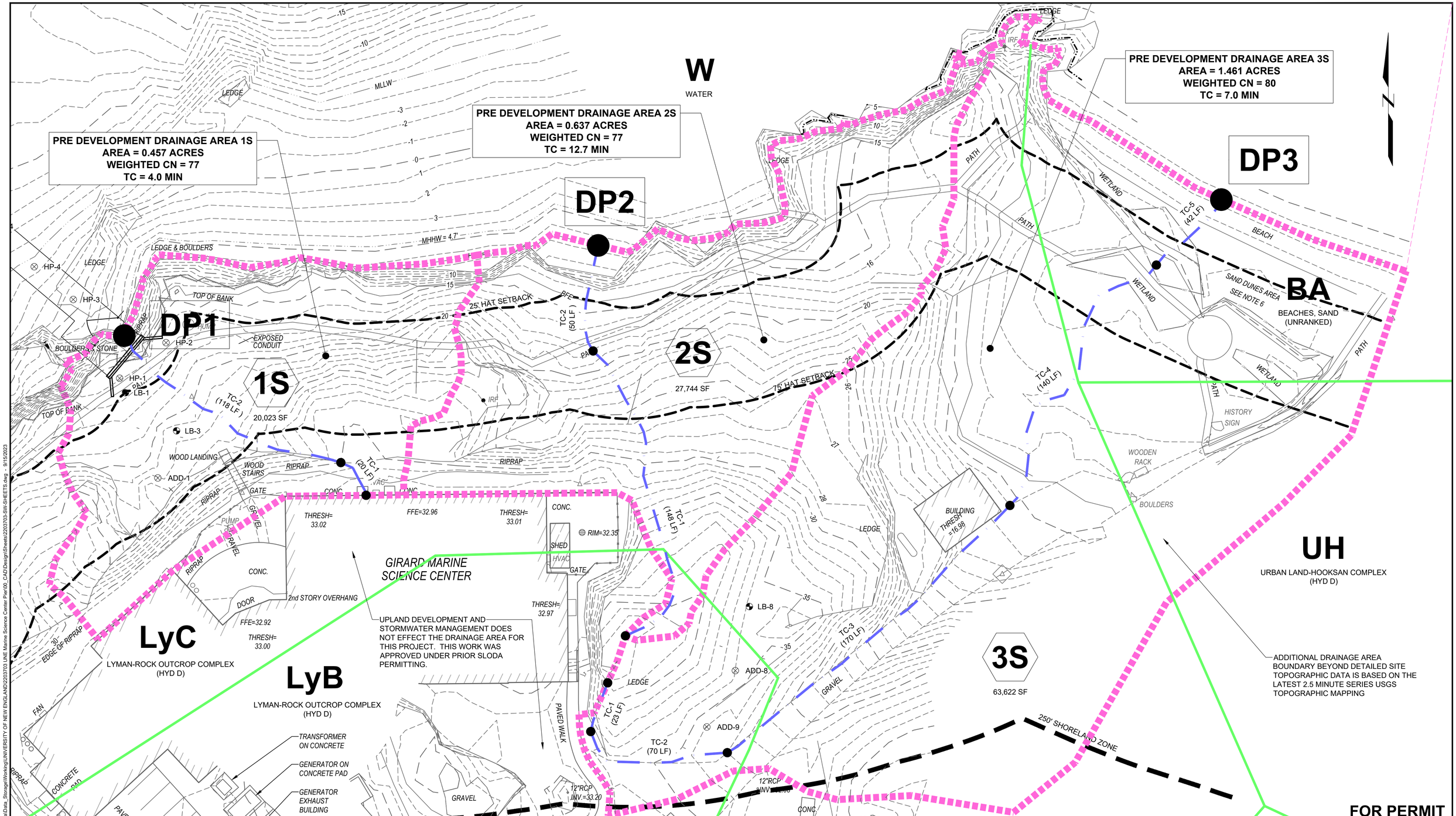

FOR PERMIT

0 20 40
SCALE, FEET

Attention:
0 1"
If this scale bar does not measure 1" then drawing is not original scale.

Designed:	DJB
Drawn:	JAM
Checked:	BJB
Approved:	BMM
P.E. No:	13033
GEI Project	2203703

GEI Consultants
GEI CONSULTANTS, INC.
5 MILK STREET
PORTLAND, ME 04101
(207)797-8901

UNE
UNIVERSITY OF NEW ENGLAND
11 HILLS BEACH RD.
BIDDEFORD, MAINE

UNIVERSITY OF NEW ENGLAND MARINE SCIENCE CENTER PIER
11 HILLS BEACH ROAD
BIDDEFORD, YORK COUNTY, MAINE

NO	DATE	ISSUE/REVISION	APP
4	9/14/2023	DEP PERMIT SET	DJB
3	6/28/2023	75% DESIGN SUBMISSION	DJB
2	2/15/2023	30% DESIGN SUBMISSION	DJB
1	12/9/2022	15% DESIGN SUBMISSIONREV	DJB
0	11/11/2022	15% DESIGN SUBMISSION	DJB

SHEET NAME
PRE-DEVELOPMENT DRAINAGE PLAN

SHEET NO.
SW-01

DICASTELNUOVO, VINNIE \\geiconsultants.com\Data\Data_Storage\Working\UNIVERSITY OF NEW ENGLAND\2203703 UNE Marine Science Center Pier\00_CAD\Design\Sheets\2203703-SW-SHEETS.dwg - 9/15/2023

POST DEVELOPMENT DRAINAGE AREA 2S
AREA=0.264 ACRES
WEIGHTED CN=79
TC=3.4 MIN

POST DEVELOPMENT DRAINAGE AREA 4S
AREA=0.402 ACRES
WEIGHTED CN=79
TC=7.2 MIN

POST DEVELOPMENT DRAINAGE AREA 1S
AREA=0.226 ACRES
WEIGHTED CN=87
TC=0.8 MIN

POST DEVELOPMENT DRAINAGE AREA 5S
AREA=1.359 ACRES
WEIGHTED CN=80
TC=7.0 MIN

POST DEVELOPMENT DRAINAGE AREA 3S
AREA=0.307 ACRES
WEIGHTED CN=84
TC=4.9 MIN

W
WATER

DP1
DP2
DP3

1S
1P
2S
3S
3P
4S
5P
5S
R1
R2

BA
BEACHES, SAND
(UNRANKED)

UH
URBAN LAND-HOOKSAN COMPLEX
(HYD D)

LyC
LYMAN-ROCK OUTCROP COMPLEX
(HYD D)

LyB
LYMAN-ROCK OUTCROP COMPLEX
(HYD D)

UPLAND DEVELOPMENT AND STORMWATER MANAGEMENT DOES NOT EFFECT THE DRAINAGE AREA FOR THIS PROJECT. THIS WORK WAS APPROVED UNDER PRIOR SLODA PERMITTING.

ADDITIONAL DRAINAGE AREA BOUNDARY BEYOND DETAILED SITE TOPOGRAPHIC DATA IS BASED ON THE LATEST 2.5 MINUTE SERIES USGS TOPOGRAPHIC MAPPING

FOR PERMIT

0 20 40
SCALE, FEET

Attention:
0 1"
If this scale bar does not measure 1" then drawing is not original scale.

Designed:	DJB
Drawn:	JAM
Checked:	BJB
Approved:	BMM
P.E. No:	13033
GEI Project	2203703

GEI Consultants
GEI CONSULTANTS, INC.
5 MILK STREET
PORTLAND, ME 04101
(207)797-8901

UNIVERSITY OF NEW ENGLAND
11 HILLS BEACH RD.
BIDDEFORD, MAINE

UNIVERSITY OF NEW ENGLAND MARINE SCIENCE CENTER PIER

11 HILLS BEACH ROAD
BIDDEFORD, YORK COUNTY, MAINE

NO	DATE	ISSUE/REVISION	APP
4	9/14/2023	DEP PERMIT SET	DJB
3	6/28/2023	75% DESIGN SUBMISSION	DJB
2	2/15/2023	30% DESIGN SUBMISSION	DJB
1	12/9/2022	15% DESIGN SUBMISSIONREV	DJB
0	11/11/2022	15% DESIGN SUBMISSION	DJB

SHEET NAME
POST-DEVELOPMENT DRAINAGE PLAN

SHEET NO.
SW-02

DICASTELNUOVO, VINNIE \\geiconsultants.com\Data\Data_Storage\Working\UNIVERSITY OF NEW ENGLAND\2203703 UNE Marine Science Center Pier\00_CAD\Design\Sheets\2203703-SW-SHEETS.dwg - 9/15/2023

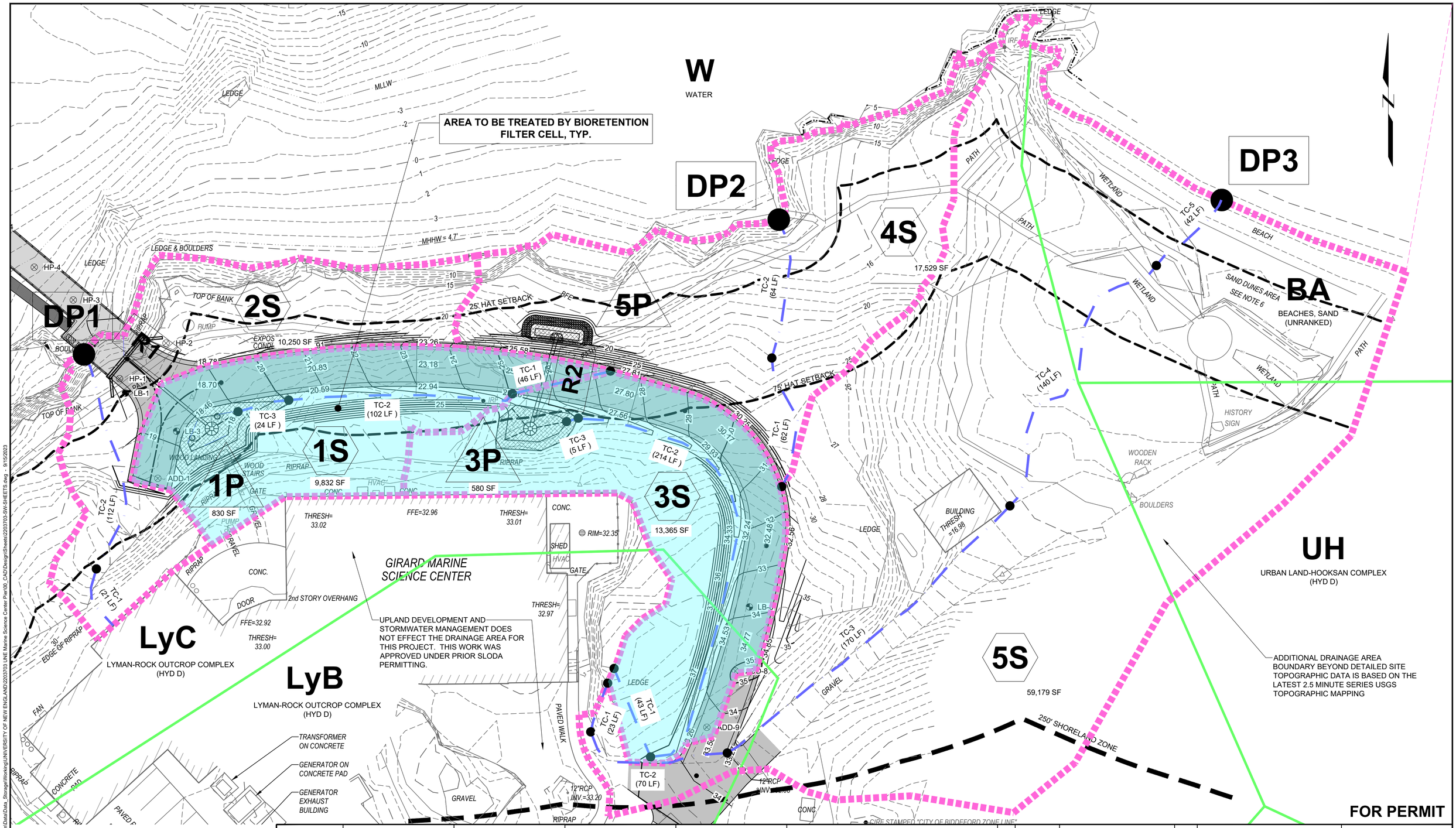

0 20 40
SCALE, FEET

Attention:
0 1"
If this scale bar does not measure 1" then drawing is not original scale.

Designed:	DJB
Drawn:	JAM
Checked:	BJB
Approved:	BMM
P.E. No:	13033
GEI Project	2203703

GEI Consultants
GEI CONSULTANTS, INC.
5 MILK STREET
PORTLAND, ME 04101
(207)797-8901

UNE
UNIVERSITY OF NEW ENGLAND
11 HILLS BEACH RD.
BIDDEFORD, MAINE

UNIVERSITY OF NEW ENGLAND MARINE SCIENCE CENTER PIER
11 HILLS BEACH ROAD
BIDDEFORD, YORK COUNTY, MAINE

NO	DATE	ISSUE/REVISION	APP
4	9/14/2023	DEP PERMIT SET	DJB
3	6/28/2023	75% DESIGN SUBMISSION	DJB
2	2/15/2023	30% DESIGN SUBMISSION	DJB
1	12/9/2022	15% DESIGN SUBMISSIONREV	DJB
0	11/11/2022	15% DESIGN SUBMISSION	DJB

SHEET NAME
TREATMENT AREA PLAN

SHEET NO.
SW-03

DICASTELNUOVO, VINNIE \\geiconsultants.com\Data\Data_Storage\Working\UNIVERSITY OF NEW ENGLAND\2203703 UNE Marine Science Center Pier\00_CAD\Design\Sheets\2203703-SW-SHEETS.dwg - 9/15/2023

Attachment 8
Alternatives Analysis
and Memo

Alternatives Analysis

The Plans provided in attachments 5 and 6 detail the preferred alternative. This design was arrived at after extensive study of alternative locations and layouts for the pier over multiple years time. Alternatives considered in developing the proposed project are briefly described below.

2008-2010 Pier Feasibility Study

In 2008-2010, UNE completed a concept planning study for the proposed pier. In this study, nine alternative designs were developed for water access facilities along the UNE waterfront consisting of various configurations of piers, boat ramps, and upland access and support facilities. The alternatives were evaluated on a range of criteria including technical criteria, functionality, constructability, regulatory impacts, cost of construction, and others to identify a preferred facility location. The nine alternatives evaluated through this study are shown in the figure below. At the conclusion of this study, Site 7 (directly in front of the Marine Science Center building) was identified as the preferred facility location to develop a new pier facility that would consist of a pile-supported pier extending from shore out into the Saco River. This location is optimal for access to and from the MSC facility and on the water, and allows for all-tide berthing with a smaller structure and less impact than several adjacent alternatives that were considered. At the conclusion of this study it was determined that Site 7 was the preferred alternative to move forward with further planning and design.

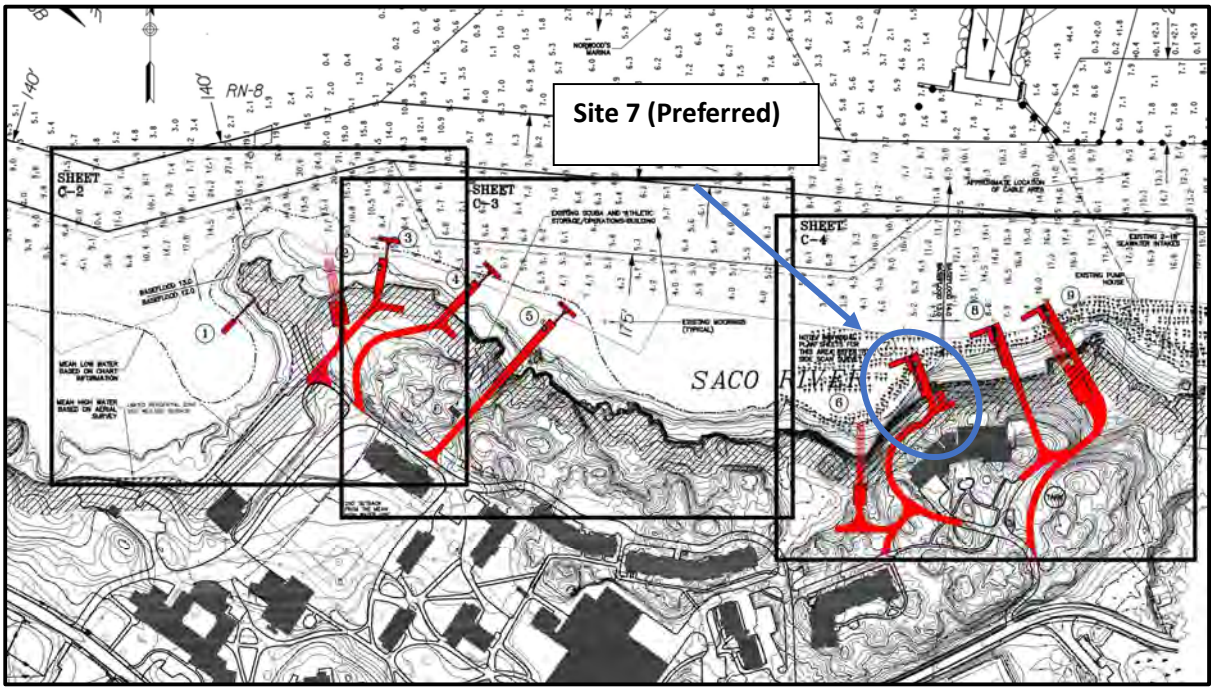

2015-2016 Pier Layout Study

After completion of the pier feasibility study described above, UNE undertook additional effort to study alternative pier layouts that would address the functional needs of the facility as well as the site exposure, berthing conditions, access requirements, and associated site impacts. During this study, numerous alternative pier layouts were considered which are depicted in the two figures that follow.

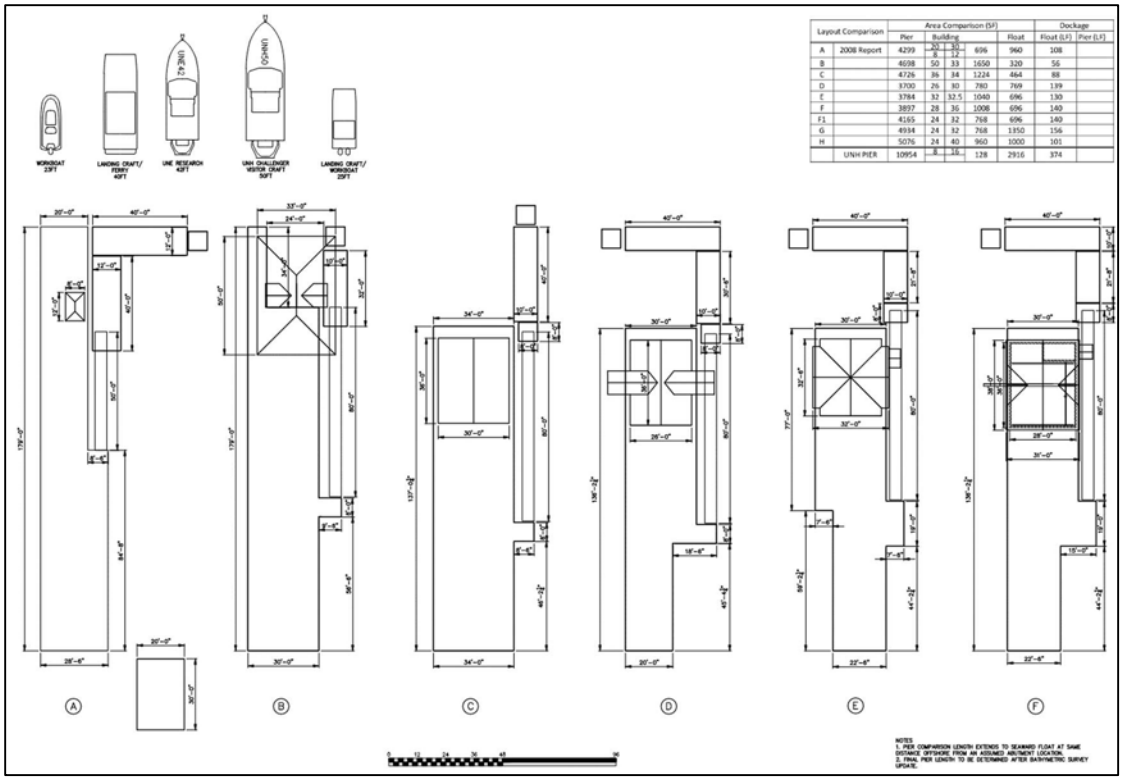

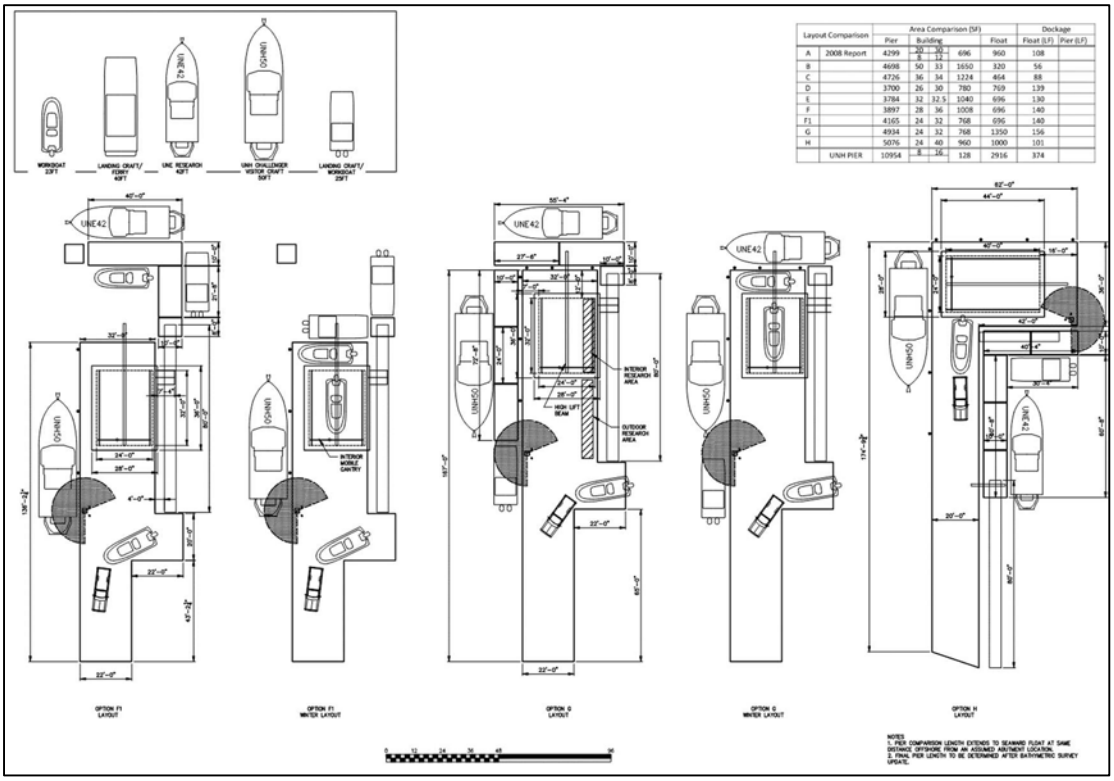

Further alternative development was completed in 2016 to address a realignment of the pier head parallel to the predominant direction of flow in the River for improved berth functionality. These alternatives considered input of the Biddeford Harbormaster and his knowledge of boating and

conditions on the Saco River after review of earlier layouts during a meeting in early 2016. The figure below depicts three alternatives considered during the study.

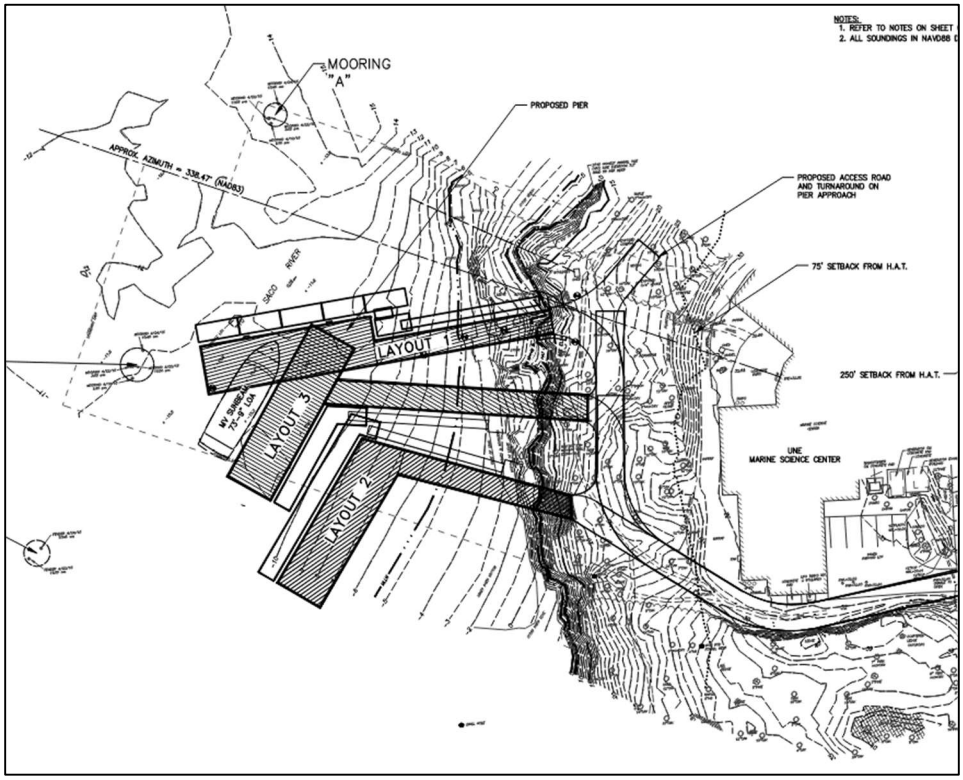

2023 Layout Refinement

During design refinement undertaken in 2023, the preferred alternative was identified as a combination of the pier approach from Layout 1, and the pier head from Layout 3, of the 2016 layout study. The Layout 1 pier approach represents the least impactful and most feasible option for upland site access. The Layout 3 pier head provides more desirable berthing conditions by aligning the main berth with flow directions in the River, and reaches sufficient depth to provide all-tide access for the range of vessels anticipated to use the facility. The layout was then refined somewhat to reduce the size of the structure to keep the dimensions to the minimum necessary to accomplish the functional goals of the project. During this refinement, the dimensions of the pier head were reduced from the initially proposed 28-feet wide by 100-feet long, to the currently proposed 23-feet 4 inches wide by 80-feet long. The dimensions of the float dock system were reduced somewhat, and the layout of fender piles was refined to reflect a functional design with minimum necessary dimensions and impacts.

The preferred alternative as currently presented represents a facility of the smallest dimensions possible to provide a functional facility that provides all-tide access for the range of vessels anticipated to use the facility, and ADA compliant access to the floating dock and gangway system and berthed vessels. While it could be possible to further reduce site impacts by further reducing the dimensions of the facility, any reduction beyond the size that is currently proposed would impact the proposed uses of the facility.

Do Nothing Alternative

A Do Nothing Alternative is the least impactful option, but would fail to address the goal of providing all-tide access to support UNE's marine research and educational programming through the marine science center. The existing seasonal floats and gangway located on the UNE campus upstream of the MSC building do not effectively meet these needs. Therefore, a Do Nothing alternative is not considered to be a feasible long-term solution.

Memo

To:	Andrew Philippe, Director of Campus Planning
From:	Daniel Bannon, P.E., CFM and Barney Baker, P.E.
c:	UNE – Alan Thibeault Site Design Associates – Tom Saucier, P.E. GEI Consultants, Inc. - John Gareau, E.I.
Date:	November 28, 2023
Re:	Proposed GMSC Pier Location University of New England, Girard Marine Science Center Pier Biddeford, Maine GEI Project No. 2203703

Summary and Purpose

The University of New England (UNE) proposes to construct a new pier on the Saco River adjacent to the Girard Marine Science Center (GMSC) to support research and educational programming. The project has been in development for more than 10 years and has gone through extensive planning and alternatives analysis in arriving at the design that is proposed. In October 2023, UNE staff held a meeting with several key stakeholders including the Biddeford and Saco Harbormasters, who raised questions as to the viability of relocating the pier further toward the east, downstream from the proposed location, in a revised alignment. The purpose of this memo is to summarize the process that has been undertaken for selecting the proposed pier location and to evaluate the advantages or disadvantages of the suggested alternative location compared to the proposed design.

Planning History

UNE has undertaken multiple studies to investigate locations and configurations for the proposed GMSC pier. These studies considered factors and constraints including but not limited to proximity to campus facilities, available water depths, site exposure to currents and wave action, upland site impacts, coastal wetland and habitat impacts, impacts to harbor uses such as fishing, recreational boating, and moorings, and estimated cost of construction. The proposed pier represents the preferred balance of these factors. The past studies that resulted in this design are briefly summarized below.

In 2008-2010, UNE completed a concept planning study to investigate opportunities for construction of improved water access to support marine science programs on campus. In this study, nine alternative design concepts were developed along the UNE waterfront consisting of various configurations of piers, boat ramps, and upland access and support facilities. The concept alternatives are shown in Fig. 1. The alternatives were evaluated on a range of criteria including technical criteria, functionality, constructability, regulatory impacts, costs of construction, and others to identify a preferred facility location. At the conclusion of this study, Site 7 (directly in front of the GMSC building) was identified as the preferred location to develop a new pier facility that would consist of a pile-supported pier extending from shore out into the Saco River. This location was determined to provide the best balance of site constraints and desired functions with good access from the GMSC, ability to achieve adequate water depths to allow for all-tide berthing of the anticipated vessels, and a location of river frontage semi-sheltered from currents and wave action.

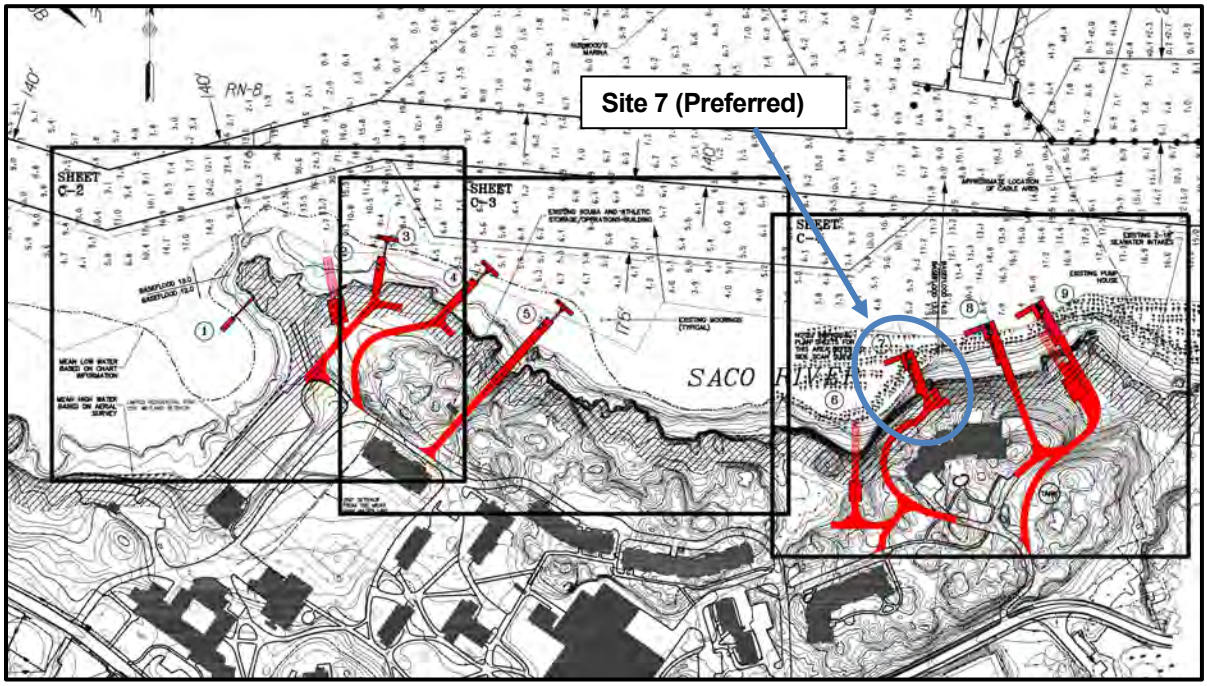

Fig. 1 – Alternative Sites Evaluated in 2008-2010 Study

After completing the pier feasibility study and identifying Site 7 as the preferred pier location, UNE undertook additional effort in 2015-2016 to study alternative pier layouts that would address the functional and vessel needs of the marine science curriculum as well as the site exposure, berthing conditions, access requirements, and associated site impacts. During this work, numerous alternative pier layouts were considered. Figs. 2 and 3 demonstrate some of the alternative layouts that were considered. This process allowed for consideration of desired pier dimensions and features, configurations of fixed structures and floating docks, pedestrian access needs, and other design criteria.

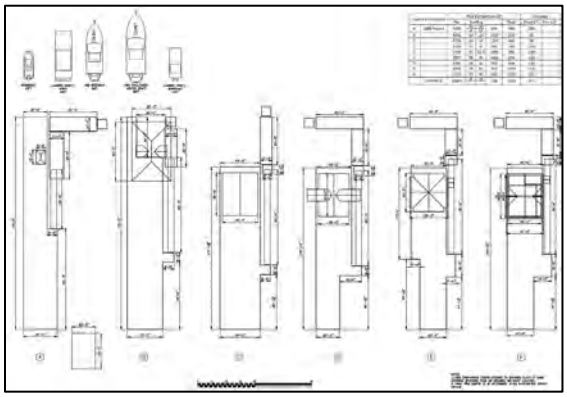

Fig. 2 – Sample of pier layout alternatives evaluated in 2015-2016 (1 of 2)

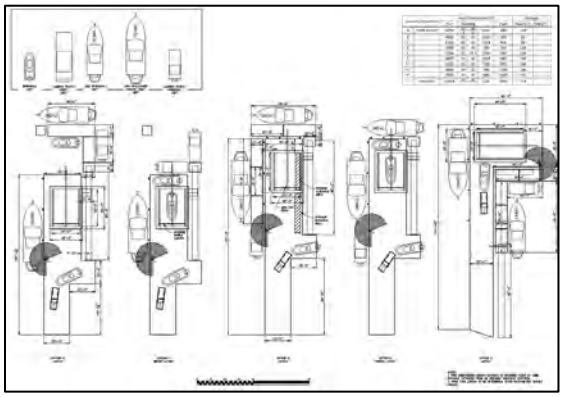

Fig. 3 – Sample of pier layout alternatives evaluated in 2015-2016 (2 of 2)

In February 2016, the proposed pier was reviewed with the with the Biddeford City Manager and key city representatives that included the Biddeford Harbormaster and Assistant Harbormaster and representatives from development staff and the Saco River Corridor Commission. Further input was gathered on river currents, recreational boating, and fishing activities resulting in the development of the three layout alternatives shown in Fig. 4 (labeled as Layout 1, Layout 2, and Layout 3). The

Harbormasters suggested that a layout with pier head oriented along the predominant direction of current such as shown in Layouts 2 and 3 would be preferable for vessels berthed at the facility. The Harbormasters also suggested that locating the pier closer to shore to minimize impacts to existing moorings and fishing activities would be preferable. These suggestions were taken into account in the next stages of design. A summary of the pier layout alternatives considered is provided in the attached memo from Baker Design Consultants dated March 22, 2016 titled "Consideration of an Alternate Pier Configuration as recommended by the City of Biddeford".

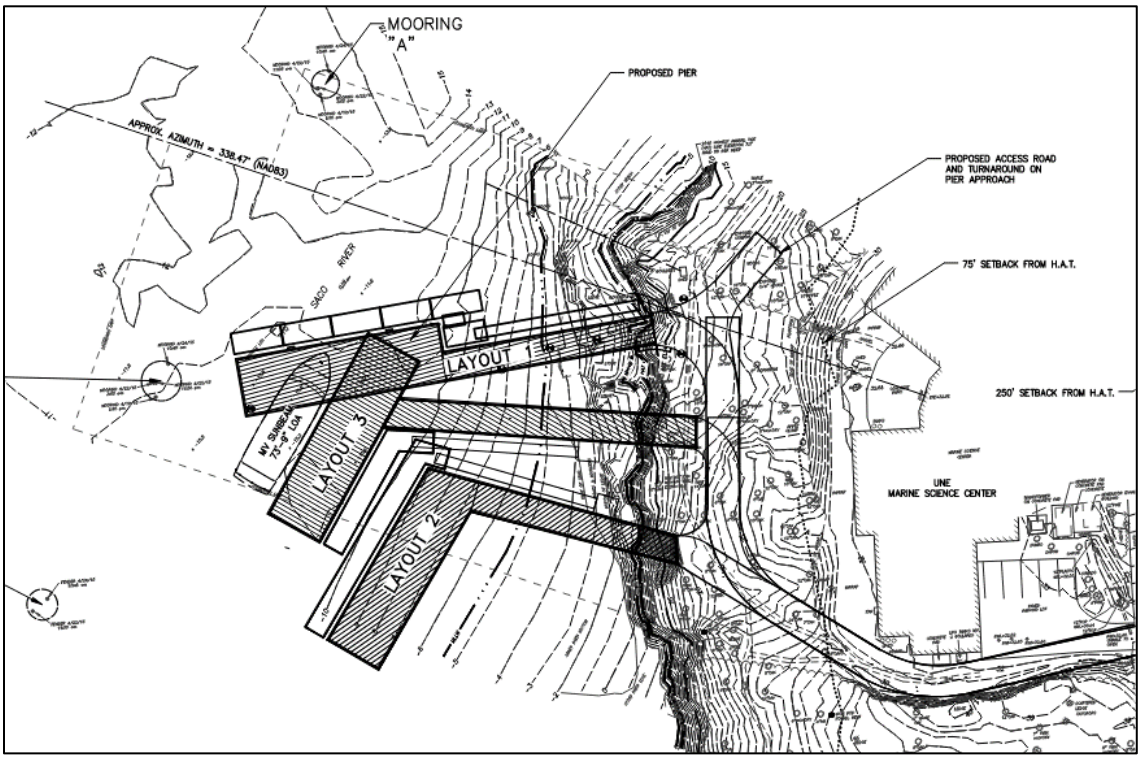

Fig. 4 – Pier layout alternatives developed in 2016 to address Harbormaster feedback

Final Design

In 2022, UNE resumed formal design development for the proposed GMSC Pier. At the start of this process, a layout was developed based on the 2016 layouts shown in Fig. 4 that reflected a combination of the pier head from Layout 3 and the pier approach from Layout 1. This new layout represented the optimal balance of site and functional constraints and upland access, with a pier head orientation that provides a main berth that is aligned with flow directions in the river, and sufficient depth to provide all-tide access for the range of vessels anticipated to use the facility.

The pier dimensions were refined through the design process to keep the structure to the minimum dimensions necessary to achieve the intended functions. This process resulted in a 22% reduction in footprint of the fixed pier, a 47% reduction in the footprint of floating docks, and a 17% reduction in the quantity of piles. Design development was advanced to 75% complete based on this design. The 75% design layout is shown in Figs. 5 and 6.



Fig. 5 – Proposed Pier Layout Vicinity Plan

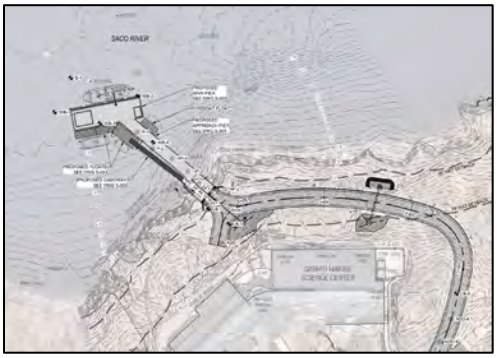

Fig. 6 – Proposed Pier Layout Site Plan

Alternative Location Analysis

In October 2023, UNE staff held a meeting to review the project with several key local stakeholders. During this meeting, the Biddeford and Saco Harbormasters suggested an alternative concept for the pier location that would relocate the pier further downstream from the proposed location as approximately shown in Fig. 7. In support of this alternative location, the Harbormasters cite deeper water, less impact to existing moorings, a location with more favorable water currents, and concerns of sediment deposition and potential need for dredging in the proposed pier location. Additionally, the Harbormasters have raised concerns about potential ice exposure given the history of icing issues at the Camp Ellis Pier directly across the River.

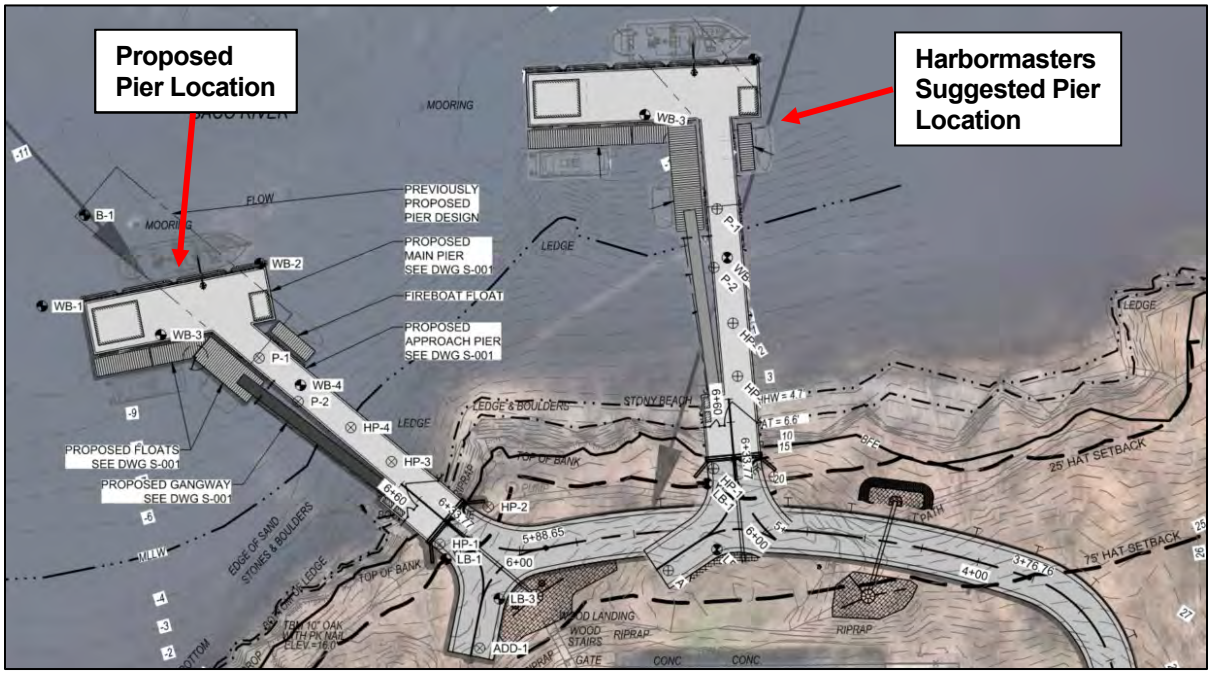

Fig. 7 – Alternative Suggested Pier Location

Review of Suggested Alternative Location

GEI has reviewed the suggested alternative layout and provided an evaluation of factors relating to the advantages and disadvantages of the proposed design versus the suggested alternative.

Water Depth

One reason for suggesting the alternative pier location is greater available water depths.

In the proposed design there is 5 to 6 feet of depth at mean lower low water (MLLW) at the main berth on the outer face of the pier which is sufficient for the proposed vessels using the facility. The suggested alternative location does have greater depth at the main berth, approximately 11 to 12 feet at MLLW. While this additional depth could allow larger vessels to use the pier, it is not needed to support the currently proposed and/or future envisioned uses.

The proposed design has 3.5 to 5 feet of depth at MLLW at the proposed floats on the inside of the pier, with sufficient distance to the MLLW line and a generally soft substrate near the floats to minimize risk of damage from vessels grounding out. In the suggested alternate location, the subtidal bottom slopes up rapidly behind the pier head. The available depth at the floats varies from 2 to 12 feet at MLLW, however the floats are in close proximity to a shallow ledge outcrop and there are concerns of hazardous conditions for vessels accessing these floats. In order to provide safe navigation to the floats the pier would need to be moved further downstream and/or extended further out into the River adding to its size, footprint, and cost.

From the standpoint of required water depths and navigational safety, the proposed design is preferred.

Exposure to Currents

The Saco River experiences currents due to tidal influence and riverine flows. To understand currents on the River, GEI has reviewed data gathered by the US Army Corps of Engineers as part of their study of erosion at Camp Ellis[1]. Figs. 8 through 11 demonstrate trends in current through differing stages of the tide. The magnitude of the current's velocity is represented by the length of the yellow arrows, with a reference arrow of 50 cm/s provided in the figures, while the current direction is indicated by the direction of the arrow. As can be seen from this data, the proposed pier location benefits from the natural shape of the shoreline which generally results in lower current velocities at the proposed location than at the downstream constriction of the River where the suggested alternate location would be located.

The lower current velocities at the proposed pier location compared to the suggested alternate result in more favorable conditions for vessels berthing at the pier, greater safety for vessels and users, and reduced structural loading on the pier. For these reasons, the proposed pier location is preferred from the standpoint of exposure to currents.

[1] Saco River and Camp Ellis Beach Section 111 Shore Damage Mitigation Study, Appendix C – Data Collection and Modeling Report, prepared by Woods Hole Group and Aubrey Consulting for the US Army Corps of Engineers, October 2006

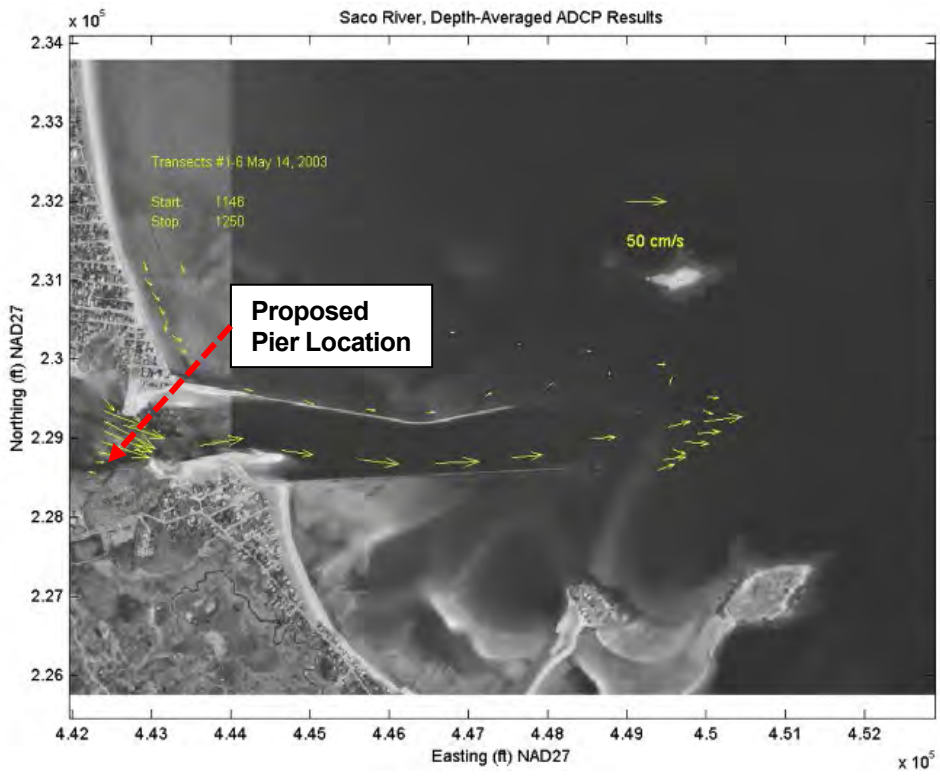

Fig. 8 – Sample of USACE Current Monitoring Data

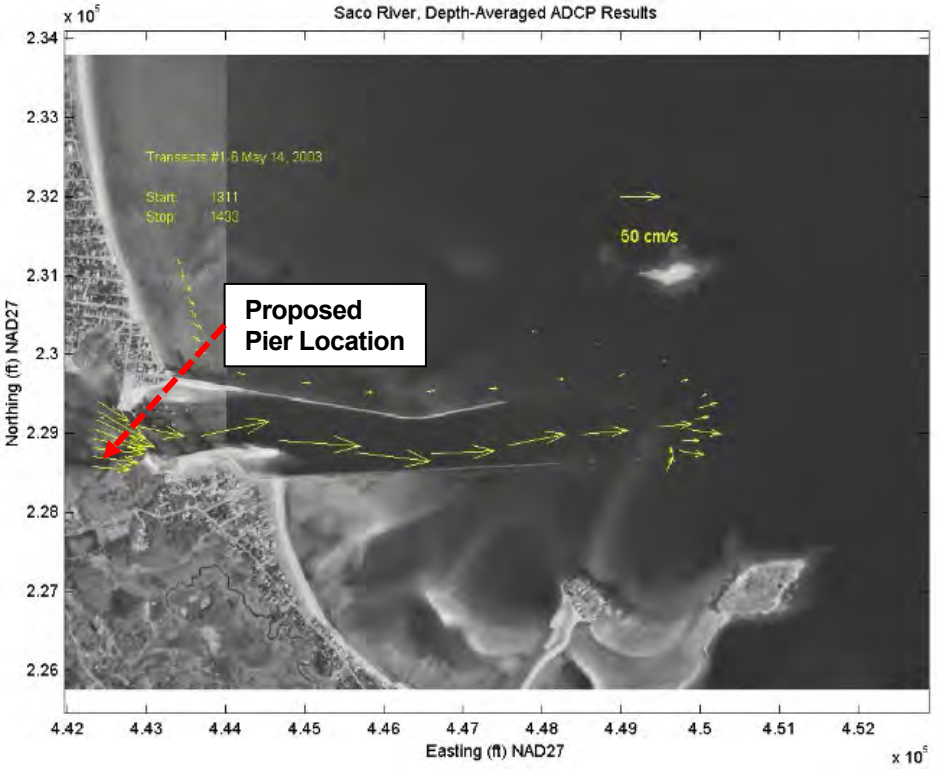

Fig. 9 – Sample of USACE Current Monitoring Data

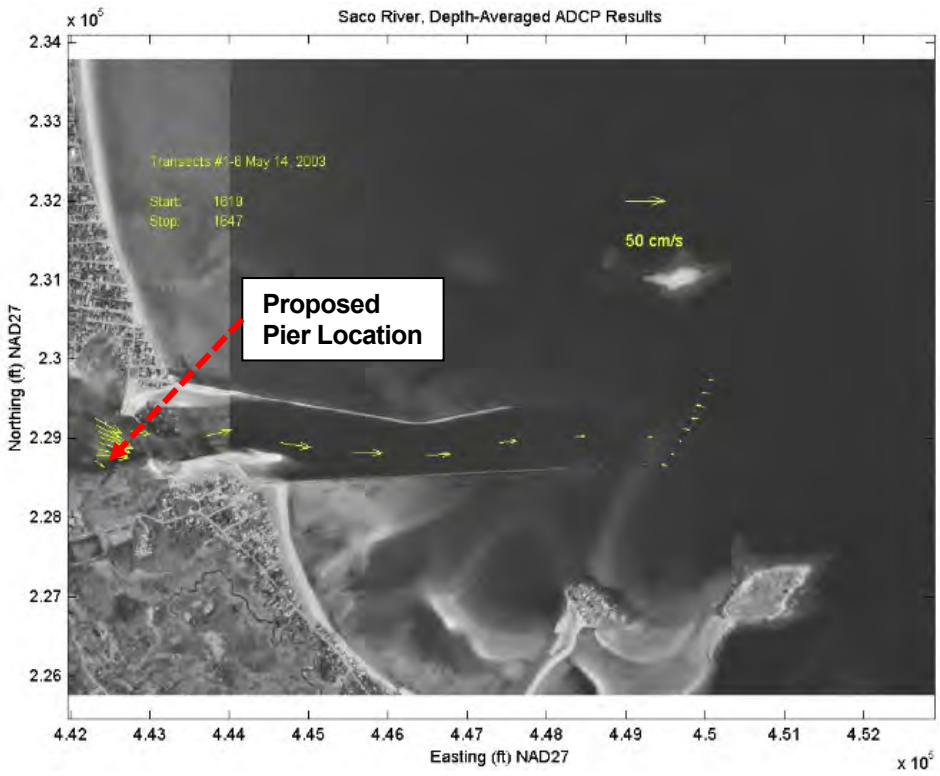

Fig. 10 – Sample of USACE Current Monitoring Data

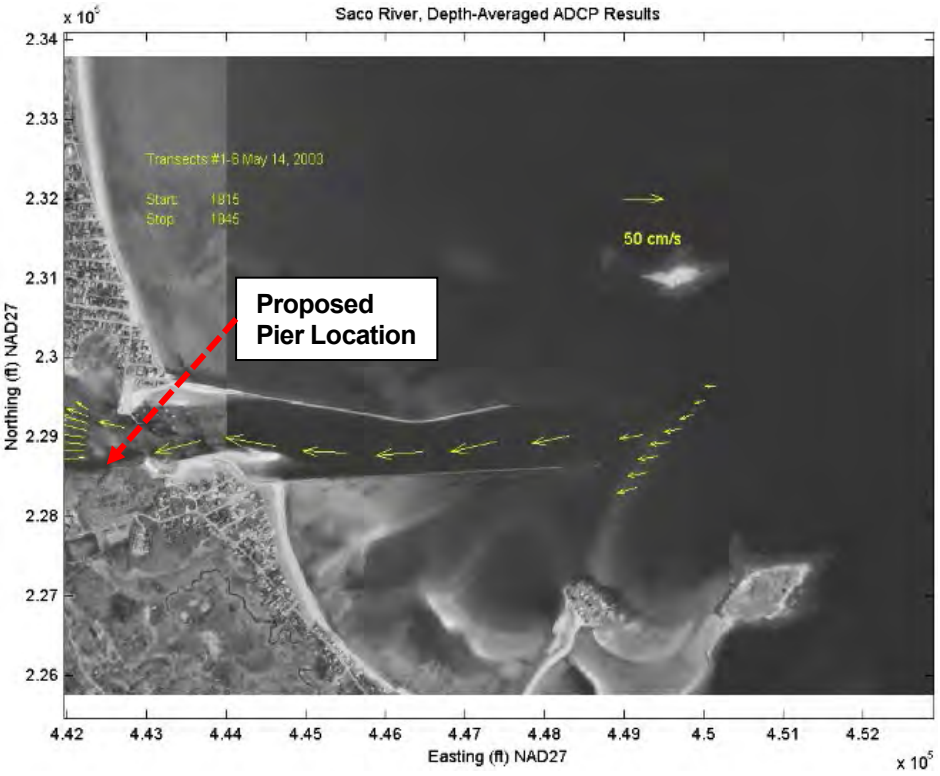

Fig. 11 – Sample of USACE Current Monitoring Data

Location Relative to River Sediment Deposition

The Harbormasters commented during the October 2023 meeting that the proposed pier location may be subject to sediment deposition that may impact pier navigation over time and require dredging in the future to restore water depths. As part of the project development, bathymetric surveys were completed in the pier area in May 2015 and again in November 2022. Fig. 9 provides an overlay of these two surveys (2022 contours are shown blue, 2015 contours are shown grey and red). In comparing these two surveys, there is negligible difference between the surveys that were taken 7.5 years apart. While there are minor differences that can be observed in contour locations and shapes, these could be attributed to the bathymetric survey accuracy and method of modeling the three-dimension surfaces used to create the contours. None of the differences are significant enough to suggest that there are large scale trends of deposition in the project area. Based upon this review, there is no indication that sediment deposition will be a substantial concern in the proposed area of the pier, and it does not appear that the suggested alternate pier location offers an advantage.

The proposed pier location does not appear to be in an area that is subject to notable sediment deposition and remains the preferred location.

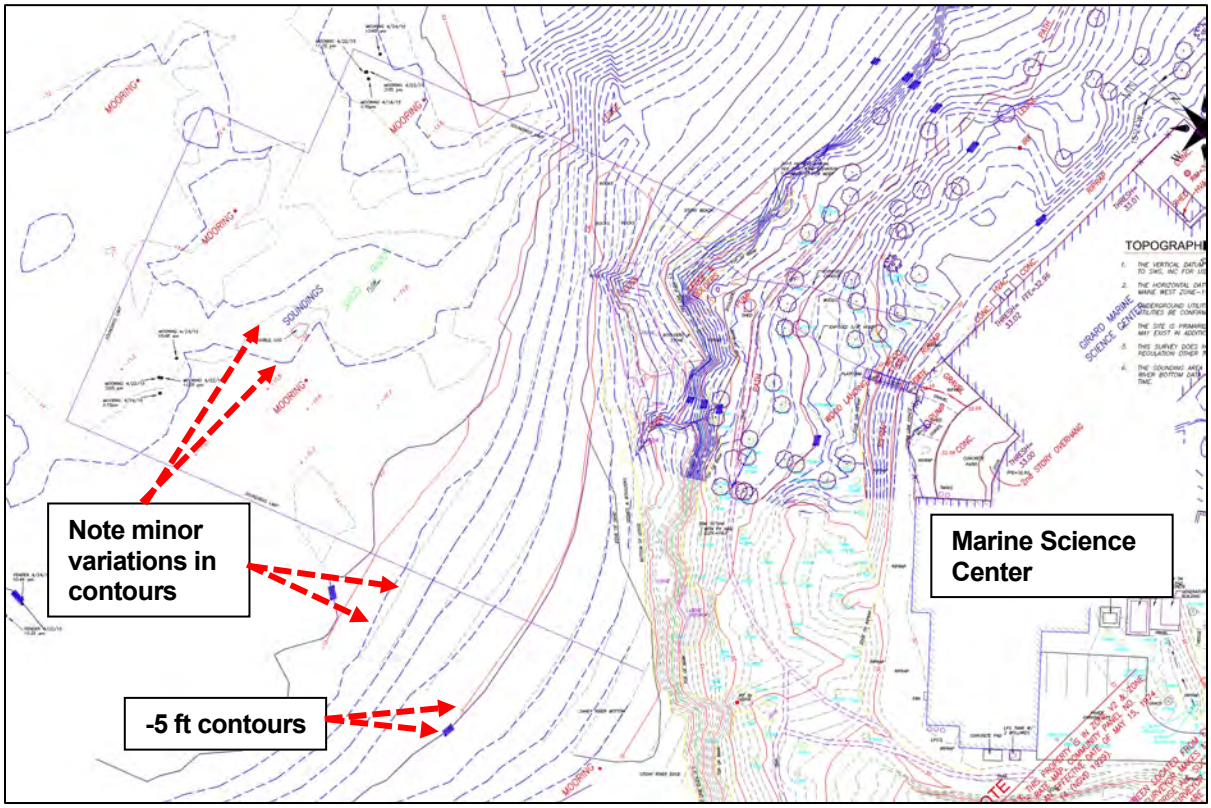

Fig. 12 – Comparison of 2022 (blue) and 2015 (grey and red) bathymetric contours

Exposure to Icing

The Harbormasters have raised concerns about exposure of the pier to winter icing. Icing on the Saco River is also a concern of UNE and the design team. The River is known to experience ice floes during the winter season that have historically been damaging to vessels at Camp Ellis. In terms of designing the fixed pier structure, the exposure to ice loading has been considered and the pile

supported pier structure will be able to sustain the forces from ice. The primary concern of the design team with winter icing is related to the impact on floating docks and berthed vessels. The ability to keep the facility in operation throughout the winter months when exposed to icing is still being evaluated by UNE. Additional steps are planned to monitor the site through winter conditions to better understand the extent of icing and potential impacts. The results of this investigation will inform the facility operations and vessel berthing plans. Methods being considered to mitigate the risks of ice impact to floats and vessels may involve the installation of additional temporary or permanent protective measures and/or limiting use of the pier during times when icing is anticipated. Irrespective of the ice protection and operational measures that may ultimately be included, the proposed pier location has less velocity exposure to icing than the suggested alternate location given its location and therefore reduced exposure. For this reason, the proposed design is preferred.

GEI has designed the fixed pier structure to resist the impact associated with river icing. Irrespective of pier location, the UNE will need to plan facility operation during periods of icing to manage risk associated with reduced facility use.

Impact to Moorings

The proposed pier layout is in close proximity to one existing known mooring which will likely need to be relocated to allow for the proposed construction. The suggested alternative is also in close proximity to one existing known mooring which would also need to be relocated if this alternative was used. Therefore, from the standpoint of mooring impacts, the proposed design and the alternative are believed to be similar.

To address anticipated impacts to moorings, GEI and UNE are prepared to work with City staff as necessary to allow for mooring adjustments to accommodate the proposed pier.

Conclusions and Closing

GEI has reviewed the concerns raised by the Saco and Biddeford Harbormasters and evaluated their impact on the proposed design, reviewed the history of planning that led to the current design location and layout, and reviewed the potential advantages and disadvantages offered by the suggested alternative pier location. While we respectfully value the input and suggestions for a layout alternative, it is our opinion that the proposed design represents the preferred balance of project requirements and site constraints. Compared to the suggested alternative, the proposed design achieves adequate water depth, provides safe navigation, results in a structure of smaller overall dimensions with less coastal wetland impact, does not appear to be subject to significant sediment deposition, and locates the pier in a location that is less exposed to current and icing impacts. For these reasons, GEI recommends that the current design and pier location be maintained.

We would be happy to discuss any elements of this memo at your convenience. Please contact Dan Bannon (dbannon@geiconsultants.com) or Barney Baker (bbaker@geiconsultants.com) with any questions.

Attachment
DJB:BJB:bdp
\\geiconsultants.com\data\Data_Storage\Working\UNIVERSITY OF NEW ENGLAND\2203703 UNE Marine Science Center Pier\11_SUBMISSIONS\2023-11-29 -Revised Memo on Suggested Alternative Location of Pier\UNE MSC Pier - MEMO_Alternative Pier Location_2023-11-28.docx

Attachment 1

2016 Pier Alternatives Memo

BAKER DESIGN CONSULTANTS
Civil, Marine and Structural Engineering

Project: **15-07 UNE Pier Layout Alternatives**

Date: March 22, 2016

To: Alan Thibeault; University of New England

Copy: Tom Saucier; Site Design Associates
Dan Bannon; Baker Design Consultants,

Subject: Consideration of an Alternate Pier Configuration as recommended by the City of Biddeford

\\BDC-SRV\PROJECTS\15\15-07 UNE MSC WATERFRONT\DESIGN\ALTERNATE PIER LOCATION STUDY\15-07 UNE PIER ALTERNATIVES MEMO MARCH 2016.DOCX

MEMO

Introduction

Baker Design Consultants (BDC) completed a pier feasibility study in 2010 study for the University. The work first defined the type of pier and parameters necessary to support the Marine Science program and then looked at the entire Saco River shoreline of the Biddeford Campus for suitable sites. Concept pier layouts for nine (9) sites were prepared and then compared in a matrix format that looked at the ability of the pier to meet the program objectives, the respective shore and waterside development challenges, the environmental impacts associated with each solution and the approximate cost and scope for construction. The pier was added to the long-term facility plan for the University.

In September 2015, BDC was retained to develop the design for a new pier at the site that had been most favorably rated in the 2010 study. Site No. 7 met the operational objectives for the pier and was located close to the Marine Science Facility pier with access to deep-water. The design has advanced through several stages of UNE MSC faculty review to define an optimum footprint and access for the pier. This was followed by site survey and geotechnical borings to verify water depths and subsurface conditions at the proposed pier location. Initial contact with the regulatory agencies has been made, but no permits applications have been filed to date. The Biddeford Harbormasters were invited to the site to review the pending (now complete) geotechnical exploration and the pier was discussed briefly at this meeting.

In February, Barney Baker and Alan Thibeault met with the City Manager and key city representatives that included the Harbormasters and representatives from development staff and the Saco River Corridor Commission. Preliminary plans for the pier were reviewed and discussed with an opportunity for staff to share comments on the proposed design. The Harbormasters were particularly keen advocates for design adjustments based on their knowledge and experience with the Harbor. All City staff was supportive of the pier and recognized the benefits it will provide to the Marine Science program at UNE.

This memo considers comments made by City staff on the current design and considers two Alternate Layouts to evaluate the changes requested. Refer to the appended drawings that show the three (3) Layouts discussed in this memo. Sheet C-1 shows the pier site in the relation to other features in the Saco River Basin.

Sheet C-1 - Saco River Basin
Sheet 1 of 4- Layout 1- Current Design
Sheet 2 of 4- Layout 2- Incorporating all City Recommendations
Sheet 3 of 4- Layout 3- Modification proposed by BDC
Sheet 4 of 4- Composite showing all 3 Layouts

Recommendations for Pier changes made by the City.

The City suggested changes to the proposed pier (Layout 1) at the February 2016 review meeting are outlined below with comments from Baker Design Consultants (BDC Response). These collectively advocate for the pier to be relocated inshore, upstream and realigned to be more parallel with the shore.

Alternate Pier configurations (Layout 2 and Layout 3) are appended. These were prepared to investigate and illustrate the changes that would be necessary to incorporate the recommended pier changes. The Table on page 4 provides a summary comparison of the proposed design (Layout 1) with the Alternate Layouts.

1. Place the pier closer to shore to minimize existing moorings impacts.

The Harbormasters were concerned that the proposed pier (Layout 1) impacted the location of several moorings and that this would create specific hardship for individual mooring holders and harbor management in general. The Harbor masters made general reference to several mooring holders, but did not have access to a plan to show where these were located.

BDC Response. Both Alternate Layouts (2 & 3) move the pier closer towards shore. Refer to tabulated mooring clearances in the Table that follows for each Layout considered.

The moorings in the pier area at the time of the April 2015 survey were put on the plan and a general search was made of google earth aerial photographs going back several years for others that might not have been in the water at the time of the field survey.

The three recorded moorings nearest the pier site are identified on the attached plans as Mooring "A", "B", and "C". For each of the pier layout alternates considered, the distance from the approximate mooring center point to the nearest point on the pier is tabulated. A clear distance in excess of 110 to 120-ft is considered an acceptable mooring clearance to the pier

2. Consider pier impacts to nearshore fishing.

The Harbormasters indicated the nearshore at the pier location was used by fishermen that use small boats to fish along the southern shore of the river from upstream to downstream. The proposed pier would require boaters to move out and around the pier and may be perceived as a barrier to the fishing activity. It was pointed out that any new pier at any waterfront location will have a similar impact on near shore navigation, but moving the pier inshore would reduce the necessary detour.

BDC Response: It is acknowledged that while the pier would influence nearshore navigation, it was well clear of the designated federal channel and boats moving around the pier would not conflict with channel traffic. The nearshore fisherman in small boats could pass under the approach section of the pier at all states of the tide in Layout No. 3 but would be restricted at low water by floats and gangway in Layouts 1 & 2.

3. Relocate pier further upstream and change orientation to reduce current exposure.

The Harbormasters confirmed that the channel restriction located just seaward of the pier created fast currents that ran parallel to shore. Based on their knowledge of the harbor, they suggested the pier would be better rotated upstream parallel to the current and moved upstream and inshore from the Layout 1 location. This would put the pier in water with less tidal current and make docking easier and safer.

BDC Response. BDC indicated they had studied a 2006 study by the Army Corps of Engineers of currents at the pier location and had already oriented the pier upstream and away from the highest tidal currents while maintaining deep water access to both sides of the pier. It is recognized that moving the pier upstream reduces the current exposure, but because the water shoals, the vessel berthing is less efficient. BDC feels strongly that dredging is a last resort because of high cost, unreliable timeframes for periodic maintenance.

Alternate Layouts 2 & 3 benefit from the local knowledge and recommendation of the Harbormasters by effectively placing the pier in calmer water with an improved docking angle to the current. However, in both alternate configurations there is a decrease in the pier face docking provided by the pier. Layout 3 also would require dredging to maintain float access. Refer to the attributes for each Layout in the Table that follows.

4. Reduce length of pier access road to reduce visual impact on shore.

This comment was made in consideration of tree cutting, vegetation removal, and regrading that would be necessary to create an access road to the pier. The road access is located within the 250' Shoreland Zone. The visual impact will be carefully reviewed by the Saco River Corridor Commission. It was suggested that the access road length to the pier could be reduced by relocating the pier upstream from the current Layout 1 location.

BDC Response. Preliminary road alignment and profiles are provided for each layout in the appended drawings and compared in the Table on page 4. In each case, the access road extends around the existing Marine Science Center building to provide equipment and vehicle access to the pier. At the pier abutment it is necessary to provide a vehicle turnaround. Options that locate the pier approach further upstream require a sloped pier approach connector in order to accommodate the steeper grades at the shore This undesirable feature is alleviated by providing a turn-around space on the Pierhead.

Alternatives Study Results summary

In summarizing the results of this Alternatives Study, the following points can be made.

- The local knowledge and insight provided by the City is both timely and helpful. The input provided both validates the Layout 1 design development to date and creates the opportunity to make small design improvements to reduce the tidal current exposure at the pier.
- Layout 2 does not work because of the steep shoreside access and the need to consider dredging in order to effectively use both sides of the pier.
- Layout 3 benefits from inside docking of small vessels, reduces access road impacts on shore with minimal concessions in water depth. However, the footprint of the pier (and cost) is increased and it is necessary to slope the connector pier to make the shore transition work. While the geotechnical fieldwork connected to date would be useful, additional geotechnical work is needed to verify subsurface conditions.

Moving forward, we recommend that Layout 3 be considered by UNE staff as a viable alternative for consensus approval with City stakeholders in advance of further design and regulatory discussion.

Please contact me with any questions.



Barney Baker, PE
Principal
JN 15-07

Table 1 – Pier Layout Alternatives Comparison

This Table below compares the proposed pier design (Layout 1) with two alternative layouts (Layouts 2 and 3) that were developed with consideration of City recommendations and key criteria that relate to size and type of impacts, facility safety and functionality that were used in the original site analysis.

	LAYOUT 1 Proposed Design	**LAYOUT 2 Alternate**	**LAYOUT 3 Alternate**
Outer face of Pier, Distance from HAT	193'	110'	152'
Orientation of Berth	40 DEG WNW	10 DEG WSW	11 DEG WSW
Setback to nearest mooring	A - 110' B - 37' C - 133'	A - 176' B - 120' C - 127'	A -121' B - 76' C - 117'
Impacted moorings	B	None	B
Setback to federal anchorage	147'	248'	204'
Water Depth Available at MLLW (no dredging)	Downstream Face – 6' Upstream Face – 5.5'	Seaward Face – 4.5' Landward Face – 1'	Seaward Face – 5.5' Landward Face – 5'
Berthing Available	Downstream Face – 100' Upstream Face – 100'	Seaward Face – 104' Landward Face* – 84' **Dredging Required*	Seaward Face – 110' Landward Face – 57'
Length of pier approach connector	100'	102'	147'
Slope of Pier Approach	No slope	1V:20H	1V:25H
Length of access road	390'	295'	330'
Access Road Gradient	*200' @ 2%* *150' @ 10%* *40' @ 0%*	*200' @ 2%* *95' @ 10%*	*200' @ 2%* *110' @ 10%* *20' @ 0%*
Length of pedestrian route from MSC building to Pier	120'	230'	170'
***Dredging Required**	No	*Yes	No
Berthed vessel alignment to currents	~40 deg	Parallel	Parallel
Pier Area	Approach – 1,400 SF Pier Head – 2,800 SF Total – 4,200 SF	Approach – 1,300 SF Pier Head – 2,800 SF Total – 4,100 SF	Approach – 2,100 SF Pier Head – 2,800 SF Total – 4,900 SF
Pier Support Conditions	Pier approach supported on shallow ledge, ability to span across transition area and support pier head on deep piles.	Pier head and majority of piles may be located in transition area with challenging geotechnical conditions. Need to confirm with additional geotechnical information.	Pier head likely located beyond transition area where the majority of piles can be driven to ledge without socketing. Need to confirm with additional geotechnical information.
Availability of geotechnical information	Geotechnical program completed	Pier is located a significant distance from any borings/probes, additional subsurface investigation required	Pier is located near the original boring/probe locations, but subsurface information will need to be supplemented with additional data.

Appendix A – Concept Plans

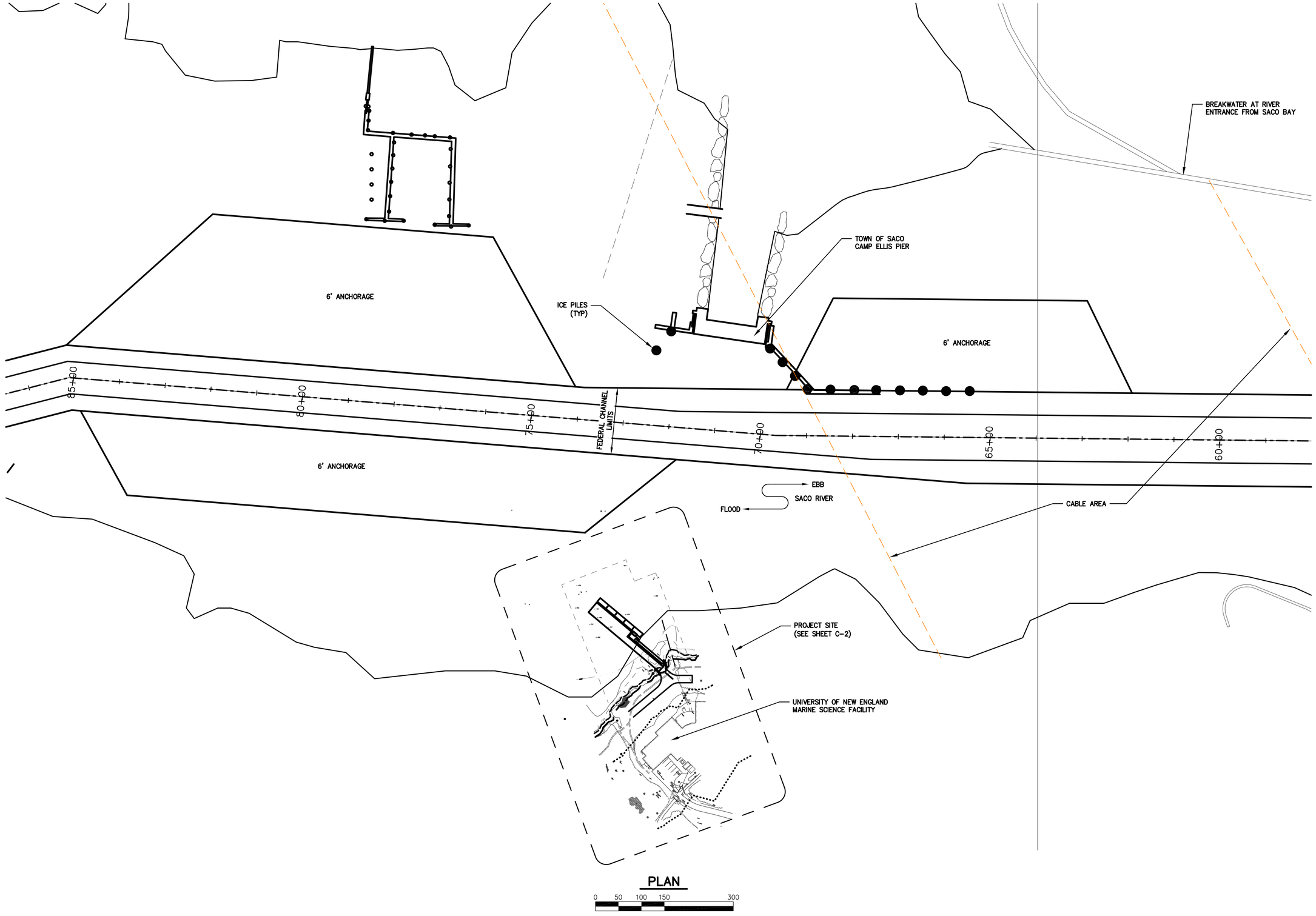

PLAN

0 50 100 150 300

\\bdc-srv\projects\15\15-07 une msc waterfront\cad\15-07 une msc waterfront civil3d (djb-nov-2015).dwg 1/25/2016

BAKER DESIGN CONSULTANTS
Civil, Marine, and Structural Engineering
7 Spruce Road • Freeport • Maine • 04032 • 207-846-9724 • info@bakerdesignconsultants.com

NO.		DATE	INT.
A	PROGRESS REVIEW SUBMISSION	6-25-15	BJB

DESIGNED BY:
DRAWN BY: JJC
CHECKED BY: BJB
SCALE: AS SHOWN

SHEET TITLE: SACO RIVER BASIN

PROJECT: UNIVERSITY OF NEW ENGLAND
UNE MSC WATERFRONT
BIDDEFORD, MAINE

DATE
FEBRUARY 2015

CONTRACT NO.
15-07

SHEET NO. C-1

REV. A

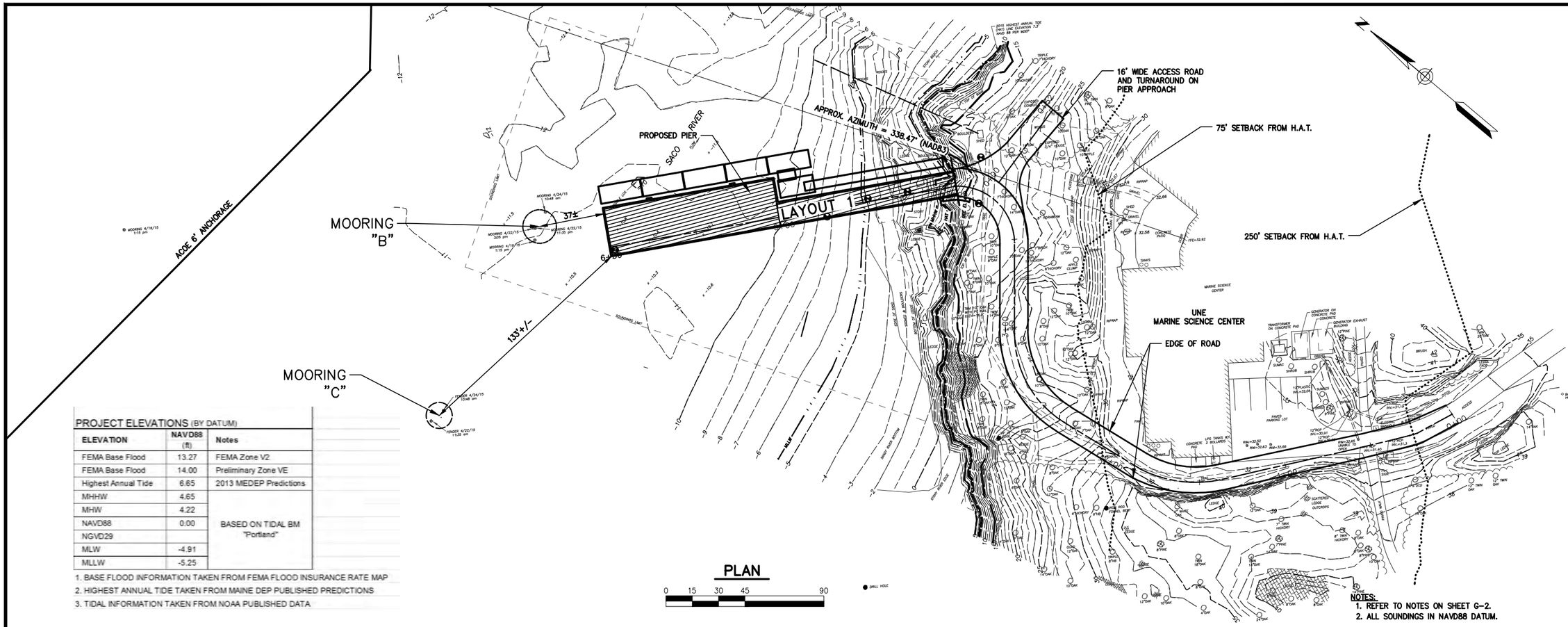

PROJECT ELEVATIONS (BY DATUM)

ELEVATION	NAVD88 (ft)	Notes
FEMA Base Flood	13.27	FEMA Zone V2
FEMA Base Flood	14.00	Preliminary Zone VE
Highest Annual Tide	6.65	2013 MEDEP Predictions
MHHW	4.65	BASED ON TIDAL BM "Portland"
MHW	4.22	
NAVD88	0.00	
NGVD29		
MLW	-4.91	
MLLW	-5.25	

1. BASE FLOOD INFORMATION TAKEN FROM FEMA FLOOD INSURANCE RATE MAP
2. HIGHEST ANNUAL TIDE TAKEN FROM MAINE DEP PUBLISHED PREDICTIONS
3. TIDAL INFORMATION TAKEN FROM NOAA PUBLISHED DATA

PLAN

0 15 30 45 90

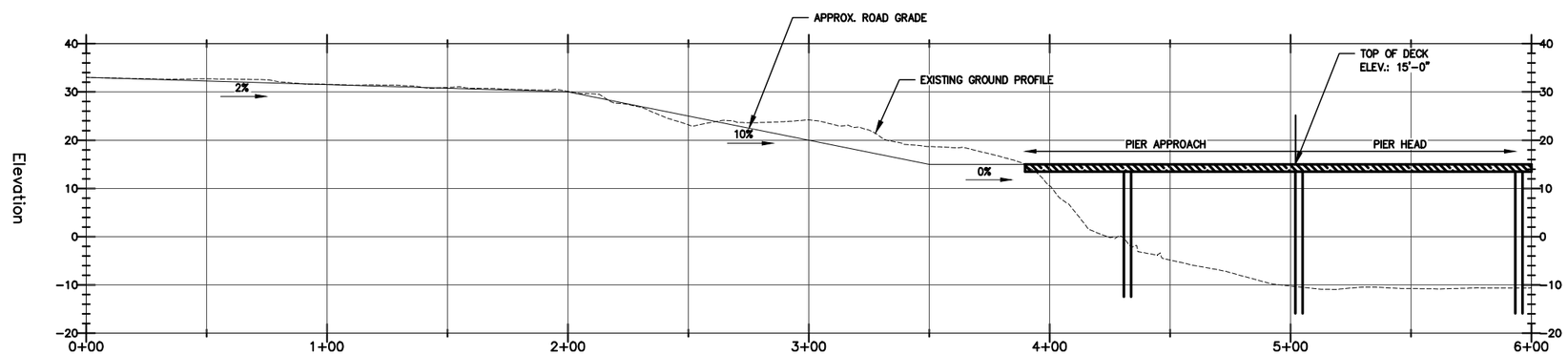

ACCESS ROAD PROFILE

0 15 30 45 90

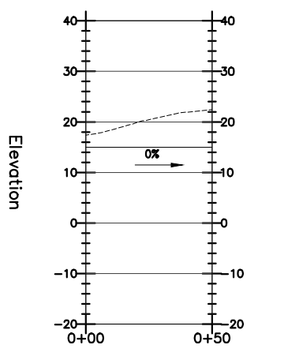

TURN AROUND PROFILE

0 15 30 45 90

\\bdc-srv\projects\15\15-07 une msc waterfront\cad\15-07 une msc waterfront civil3d (alternate design review).dwg 3/22/2016

BAKER DESIGN CONSULTANTS
Civil, Marine, and Structural Engineering
7 Spruce Road • Freeport • Maine • 04032 • 207-846-9724 • info@bakerdesignconsultants.com

NO.		DATE	INT.
A	ALTERNATIVES MEMO SUBMISSION	3-15-16	BJB

STATE OF MAINE
BARNEY J. BAKER
No. 5737
LICENSED PROFESSIONAL ENGINEER

DESIGNED BY: DJB
DRAWN BY: KET
CHECKED BY: DJB
SCALE: AS SHOWN

SHEET TITLE: PIER LAYOUT 1 ACCESS ROAD PLAN AND PROFILE

PROJECT: UNIVERSITY OF NEW ENGLAND UNE MSC WATERFRONT BIDDEFORD, MAINE

DATE MARCH 2016

CONTRACT NO. 15-07

SHEET NO. 1 OF 4

REV. A

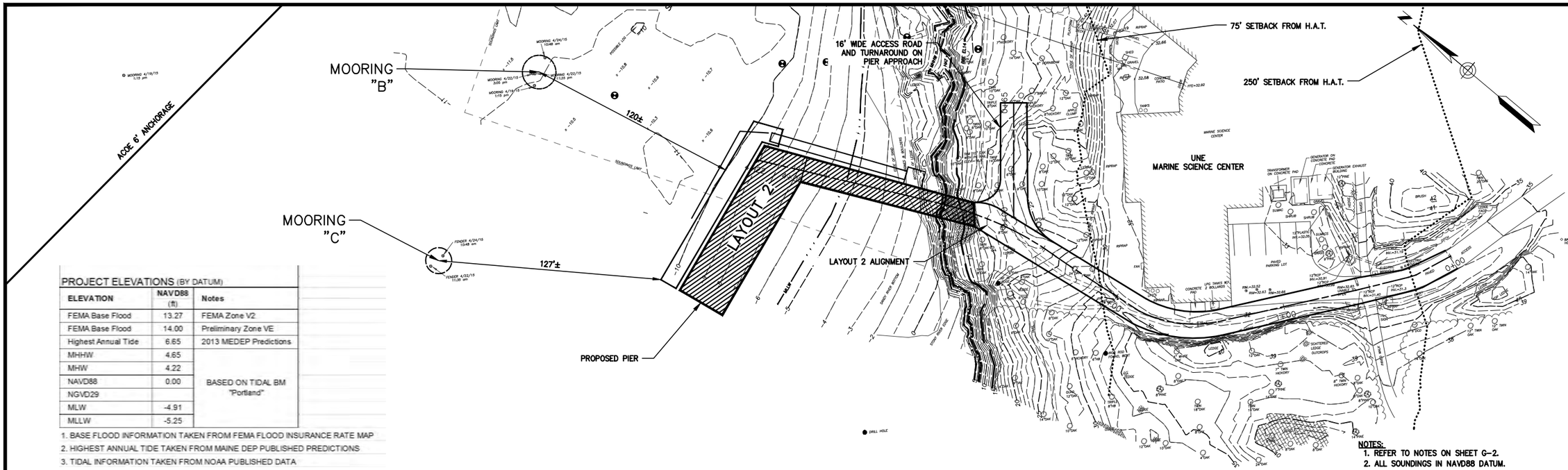

PROJECT ELEVATIONS (BY DATUM)		
ELEVATION	**NAVD88 (ft)**	**Notes**
FEMA Base Flood	13.27	FEMA Zone V2
FEMA Base Flood	14.00	Preliminary Zone VE
Highest Annual Tide	6.65	2013 MEDEP Predictions
MHHW	4.65	BASED ON TIDAL BM "Portland"
MHW	4.22	
NAVD88	0.00	
NGVD29		
MLW	-4.91	
MLLW	-5.25	

1. BASE FLOOD INFORMATION TAKEN FROM FEMA FLOOD INSURANCE RATE MAP
2. HIGHEST ANNUAL TIDE TAKEN FROM MAINE DEP PUBLISHED PREDICTIONS
3. TIDAL INFORMATION TAKEN FROM NOAA PUBLISHED DATA

NOTES:
1. REFER TO NOTES ON SHEET G-2.
2. ALL SOUNDINGS IN NAVD88 DATUM.

PLAN

0 15 30 45 90

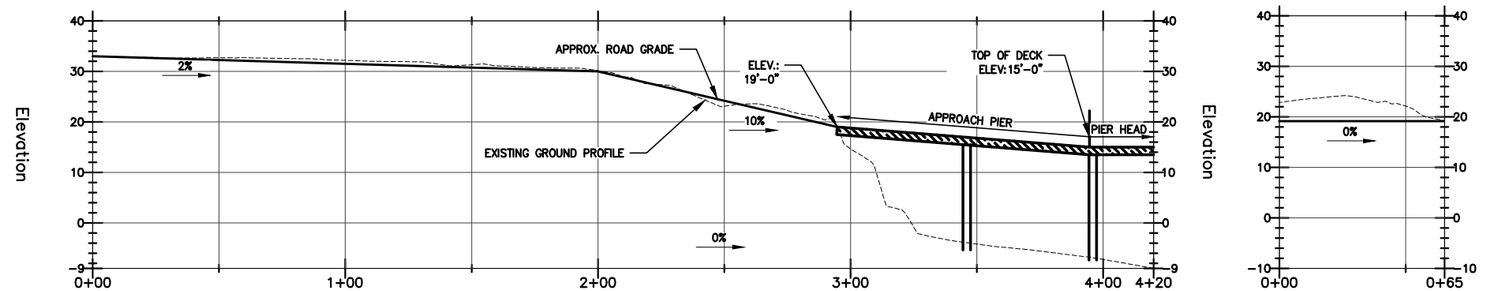

ACCESS ROAD PROFILE

0 15 30 45 90

TURN AROUND PROFILE

0 15 30 45 90

BAKER DESIGN CONSULTANTS
Civil, Marine, and Structural Engineering
7 Casco Road ■ Freeport ■ Maine ■ 04032 ■ 207-865-0374 ■ info@bakerdesignmaine.com

A	ALTERNATIVES MEMO SUBMISSION	3-15-16	BJB

BARNEY J. BAKER No. 5737 LICENSED PROFESSIONAL ENGINEER STATE OF MAINE

DESIGNED BY: DJB
DRAWN BY: KET
CHECKED BY: DJB
SCALE: AS SHOWN

SHEET TITLE: PIER LAYOUT 2 ACCESS ROAD PLAN AND PROFILE
PROJECT: UNIVERSITY OF NEW ENGLAND UNE MSC WATERFRONT RUMFORD, MAINE

DATE MARCH 2016
CONTRACT NO. 15-07
SHEET NO. 2 OF 4
REV A

\\bdc-srv\projects\15\15-07 une msc waterfront\cad\15-07 une msc waterfront civil3d (alternate design review).dwg 3/22/2016

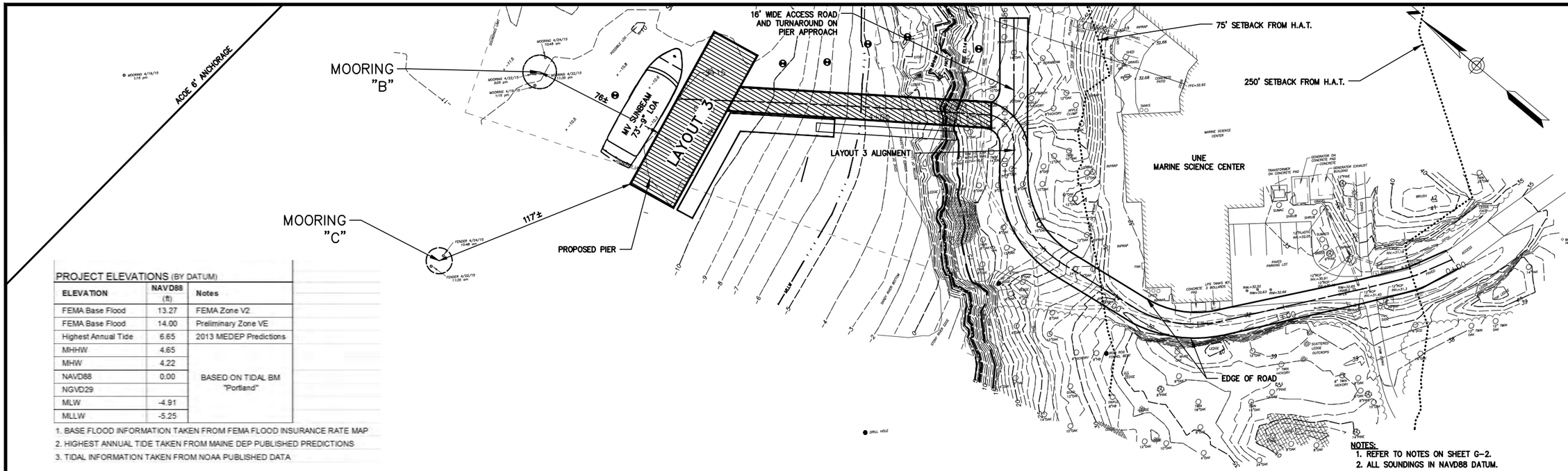

PROJECT ELEVATIONS (BY DATUM)		
ELEVATION	**NAVD88 (ft)**	**Notes**
FEMA Base Flood	13.27	FEMA Zone V2
FEMA Base Flood	14.00	Preliminary Zone VE
Highest Annual Tide	6.65	2013 MEDEP Predictions
MHHW	4.65	BASED ON TIDAL BM "Portland"
MHW	4.22	
NAVD88	0.00	
NGVD29		
MLW	-4.91	
MLLW	-5.25	

1. BASE FLOOD INFORMATION TAKEN FROM FEMA FLOOD INSURANCE RATE MAP
2. HIGHEST ANNUAL TIDE TAKEN FROM MAINE DEP PUBLISHED PREDICTIONS
3. TIDAL INFORMATION TAKEN FROM NOAA PUBLISHED DATA

NOTES:
1. REFER TO NOTES ON SHEET G-2.
2. ALL SOUNDINGS IN NAVD88 DATUM.

PLAN

0 15 30 45 90

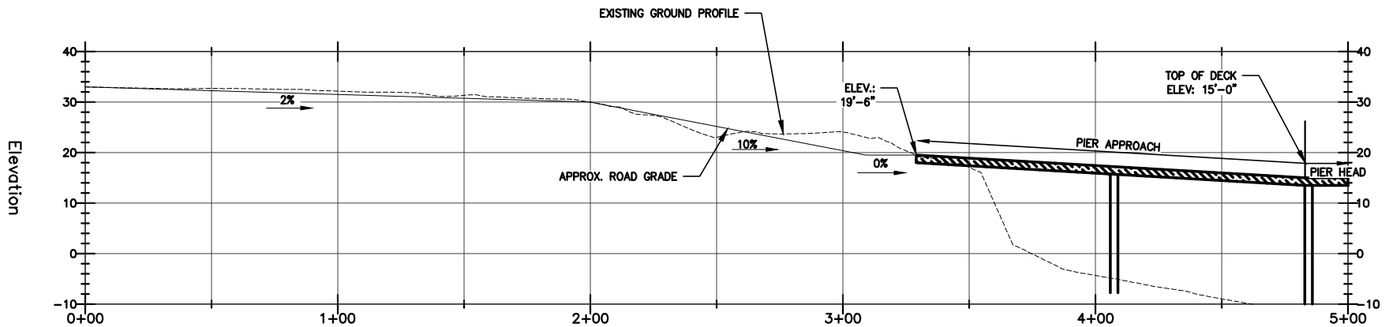

ACCESS ROAD PROFILE

0 15 30 45 90

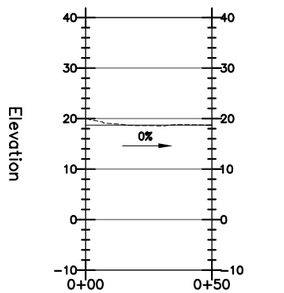

TURN AROUND PROFILE

0 15 30 45 90

BAKER DESIGN CONSULTANTS
Civil, Marine, and Structural Engineering
7 Spruce Road • Freeport • Maine • 04032 • 207-846-9724 • info@bakerdesignconsultants.com

NO.		DATE	INT.
A	ALTERNATIVES MEMO SUBMISSION	3-15-16	BJB

BARNEY J. BAKER No. 5737 LICENSED PROFESSIONAL ENGINEER STATE OF MAINE

DESIGNED BY:	DJB	DRAWN BY:	KET	CHECKED BY:	DJB	SCALE:	AS SHOWN

SHEET TITLE: PIER SITE PLAN LAYOUT 3 SKETCH

PROJECT: UNIVERSITY OF NEW ENGLAND UNE MSC WATERFRONT BIDDEFORD, MAINE

DATE: MARCH 2016

CONTRACT NO.: 15-07

SHEET NO.: 3 OF 4 | REV.: A

\\bdc-srv\projects\15\15-07 une msc waterfront\cad\15-07 une msc waterfront civil3d (alternate design review).dwg 3/22/2016

PROJECT ELEVATIONS (BY DATUM)		
ELEVATION	**NAVD88 (ft)**	**Notes**
FEMA Base Flood	13.27	FEMA Zone V2
FEMA Base Flood	14.00	Preliminary Zone VE
Highest Annual Tide	6.65	2013 MEDEP Predictions
MHHW	4.65	BASED ON TIDAL BM "Portland"
MHW	4.22	
NAVD88	0.00	
NGVD29		
MLW	-4.91	
MLLW	-5.25	

1. BASE FLOOD INFORMATION TAKEN FROM FEMA FLOOD INSURANCE RATE MAP
2. HIGHEST ANNUAL TIDE TAKEN FROM MAINE DEP PUBLISHED PREDICTIONS
3. TIDAL INFORMATION TAKEN FROM NOAA PUBLISHED DATA

NOTES:
1. REFER TO NOTES ON SHEET G-2.
2. ALL SOUNDINGS IN NAVD88 DATUM.

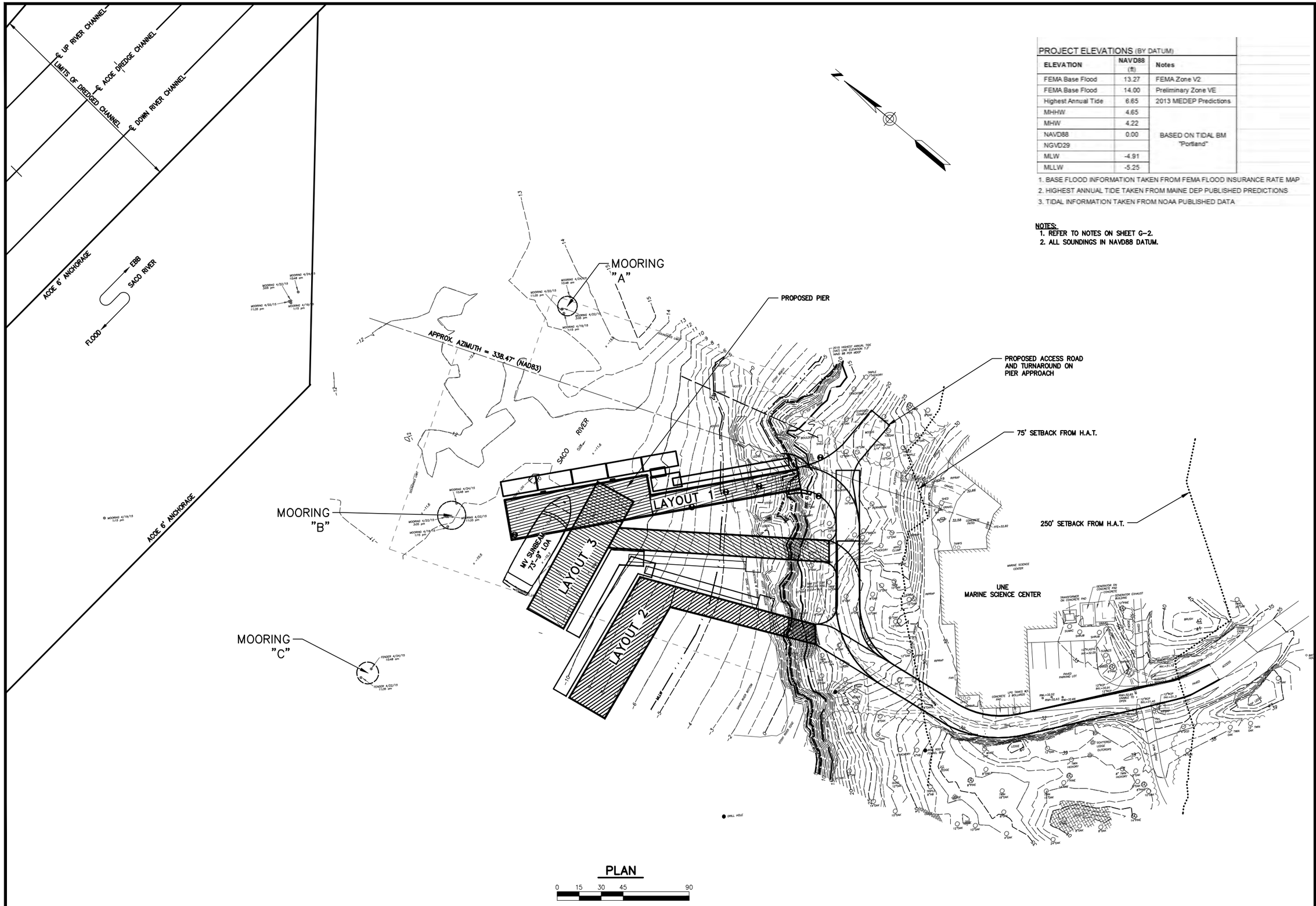

PLAN

0 15 30 45 90

BAKER DESIGN CONSULTANTS
Civil, Marine, and Structural Engineering
7 Spruce Road • Freeport • Maine • 04032 • 207-846-9724 • info@bakerdesignconsultants.com

NO.		DATE	INT.
A	ALTERNATIVES MEMO SUBMISSION	3-15-16	BJB

STATE OF MAINE
BARNEY J. BAKER
No. 5737
LICENSED PROFESSIONAL ENGINEER

DESIGNED BY: BJB
DRAWN BY: KET
CHECKED BY: BJB
SCALE: AS SHOWN

SHEET TITLE: PIER SITE PLAN ALTERNATIVES SKETCHES

PROJECT: UNIVERSITY OF NEW ENGLAND UNE MSC WATERFRONT BIDDEFORD, MAINE

DATE FEBRUARY 2015

CONTRACT NO. 15-07

SHEET NO. 4 OF 4 | REV. A

\\bdc-srv\projects\15\15-07 une msc waterfront\cad\15-07 une msc waterfront civil3d (alternate design review).dwg 3/22/2016

Attachment 9
Permits

COMMISSION ORDER
IN THE MATTER OF

UNIVERSITY OF NEW ENGLAND 11 HILLS BEACH ROAD BIDDEFORD, ME 04005 PERMIT #20-491	SACO RIVER CORRIDOR ACT FINDINGS OF FACT AND ORDER

The Saco River Corridor Commission, created by the Maine State Legislature in the Saco River Corridor Act, 38 M.R.S.A. §951, et seq., (the Act), at a meeting held on August 28th, 2024, at the Porter Town Hall in Porter, Maine, and after a review of the application and supporting documents makes the following findings of fact:

PROJECT DESCRIPTION

1. The applicant is seeking a permit to construct a research pier with associated development, including a dock and float system, shed, and access road.

SITE LOCATION/DESCRIPTION

2. The property is described in the York County Registry of Deeds, Book 1484, Page 145.
3. Location: Lot 4 (Map 52) at 11 Hills Beach Road in Biddeford, Maine.
4. The 49.9-acre lot has approximately 3,500 feet of frontage on the Saco River
5. Most project activities are proposed within 250 feet of the high water line.
    a. The proposed pier, dock and float system, and shed (located on the pier) extend below the mean high water line of the Saco River.
    b. The access road begins slightly beyond the 250-foot buffer; as it turns parallel to the river, it enters the 75-foot buffer and only extends into the 25-foot buffer, where it connects to the pier at the shoreline of the Saco River. The proposed turnaround area is located outside of the 25-foot buffer.
6. The property is located in the General Development District.
7. The 100-year floodplain is limited to the immediate shoreline.

ANALYSIS

Pier Structure

8. The applicant proposes to construct a permanent vehicle-rated pier structure extending from the shore into the Saco River. The proposed pier consists of an approximately 130-foot-long approach section and an 80-foot-long pier head section oriented parallel to the flow of the river. The proposed pier consists of a concrete superstructure on 25 concrete-filled steel pipe piles (7 of which will be socketed to ledge, with the remaining 18 to be driven to ledge), with 30 untreated timber piles for vessel berthing and floating docks, and a pile-supported gangway lifting beam

which will allow the gangway to be removed from the water temporarily. All of the piles are located below the highest annual tide line.

9. The direct impact from all piles totals 84 square feet, while the indirect impact below the highest annual tide line from the pier footprint is 3,579 square feet.
10. A concrete abutment connecting the pier to the access road is located above the highest annual tide line.

Floating Dock System & Gangway

11. The proposed floating dock system consists of one 8 x 24-foot float, one 8 x 26-foot, 10-inch float, and one 12 x 30-foot gangway landing float to provide all-tide vessel access on the west side of the pier. A 6 x 20-foot floating dock (relocated from an existing upstream location on the property) is also proposed to provide a tie-up location for the City of Biddeford Fire Boat on the east side of the pier.
12. The applicant additionally proposes an 80 x 5-foot gangway on the west side of the pier to provide ADA-compliant access to the float system.
13. All floating docks are located below the mean lower low water line and are proposed to be restrained and guided by the timber piles. The proposal will allow vessels to tie up to the pier during all tide levels.
14. The floating dock system has a total indirect impact of 848 square feet, and the gangway has a total indirect impact of 357 square feet.

Pier Buildings

15. An 8 x 10-foot shed is proposed on the east side of the pier head to provide storage for small equipment and to house utility features (electric panels).

Access Drive

16. The applicant proposes to construct a 16-foot-wide paved access road with 2-foot-wide paved shoulders extending from the road near the Marine Science Center around the east side of the Marine Science Center to the proposed pier, as well as associated grading, drainage, and stormwater management features.
17. A turnaround is proposed adjacent to the pier to allow vehicles, including fire trucks, to redirect and exit via the access road.
18. The applicant reports that vehicles will use the existing parking spaces adjacent to the Marine Science Center and that no parking is proposed adjacent to the pier.
19. The applicant states that the proposed access road will provide construction access for the project and allow more staging to take place on land, minimizing impacts to the water.
20. They report that upland work includes stormwater management features that have been designed to meet Maine DEP Chapter 500 standards.

Summary of Statement of Necessity

21. The proposed pier will provide students and researchers year-round access to the river and ocean, including a "living laboratory" located on Ram Island in Saco Bay, which is currently inaccessible during the winter and spring when the seasonal dock and float system aren't in use. The applicant states that the pier will facilitate research activities and scientific and practical exchanges with local, regional, and national marine researchers and industry partners. They note

that the marine research afforded by the proposed year-round access will allow UNE to gather data to guide Maine's response to climate change and inform data-driven decisions impacting aquaculture, fisheries, marine law and policy, and related fields.

General Background

22. The applicant reports that the area where the pier will be located is ledge, with adjacent areas consisting of undeveloped sparsely wooded areas and coastal wetlands.
23. The applicant addressed the §959-A.(A-K) standards in the project description. Where applicable, the staff has added additional details gathered from site plans. In summary:
    a. Degradation of Air and Water Quality – no anticipated impacts.
        i. Vegetation swales and two bioretention filtration ponding areas are proposed along the access road as part of the stormwater management plans.
    b. Harmful Alteration of Wetlands – no anticipated significant impacts (84 square feet of direct impact as noted above in Item 9.)
    c. Increase in Erosion and Sedimentation –
        i. The soils in the project area are not highly erodible, and the pier is located over exposed ledge and ledge with overburden.
        ii. All construction and site alterations will be done in accordance with Maine Erosion and Sedimentation Control Best Management Practices, and the site will be permanently stabilized following completion of construction.
        iii. Site plans note that the siltation boom will be installed for the duration of the construction process.
    d. Danger of Increased Flood Damage –
        i. The structure has been designed to withstand flood impacts, and its elevation takes into account rising sea levels.
    e. Obstruction of Flood Flow – no significant impacts
    f. Damage to Fish and Wildlife Habitat – no significant impacts
    g. Despoliation of Scenic Rural, and Open Space Character of the Corridor –
        i. The project's limit of disturbance encompasses 0.92 acres, with vegetation removal taking place in that envelope to provide a cleared area for the access drive and stormwater facilities.
        ii. 44 trees, including stumps, are proposed for removal within the project area.
        iii. 10 to 25 feet of clearing is proposed on average along either side of the access road. Clearing in several areas is greater to accommodate stormwater structures.
        iv. The remaining open space will be maintained, natural surroundings will be preserved, and scenic views from neighboring properties will not be obstructed.
        v. Given the water-dependent nature of the project, it will be visible from the river.
    h. Overcrowding – no significant impacts
    i. Excessive noise – no significant impacts
    j. Obstruction to Navigation –
        i. The structures will be no closer than 208 feet from the Army Corps of Engineers anchorage area.
        ii. Site plans note that construction activities will not impact the federal navigation channel at any time.

k. Interference with Educational, Scenic, Scientific, Historic, or Archaeological Values of the Areas Designated and Approved for Inclusion within the Resource Protection District
    i. The project is not located in the Resource Protection District, and the applicant states that it will enhance the area's educational value.

24. At the August 14th, 2024, Rules Committee meeting, the Committee expressed concerns about the diminution of the vegetated buffer as a result of the proposed access road construction. They noted that the removal of vegetation in that area could increase the visual impact of the existing Marine Science Center and of the access road itself. The Committee suggested that, if possible (depending on site conditions), the applicant should propose additional plantings between the access road and the shoreline.
25. In response to the Rules Committee comments:
    a. The applicant's agent submitted an updated vegetation plan, which reduced the number of trees proposed for removal by five trees, most of which were in the 25-foot buffer. The updated vegetation plan also clarified the number of trees 8 inches in diameter and greater within the 25-foot buffer that would remain post-construction.
    b. The applicant's agent stated that it was not possible to reduce the width of the access drive to less than the currently proposed 20 feet due to the National Fire Protection Association codes.
    c. The applicant's agent submitted the Stormwater Inspection and Maintenance plans for the project, which will include routine inspections of the systems post-construction to ensure proper function.
26. Staff notes from the August 23rd, 2024, site visit state:
    a. The area has many smaller shrubby vegetation. Numerous large trees are also present, and they are proposed for removal.
    b. A cleared opening would be created between the River and the Marine Science Center.
    c. The proposed clearing (for the road) extends no closer than 25 feet from the mean high water line. However, little vegetation would remain in some areas.
27. At the August 28th, 2024, Commission meeting:
    a. Public comments were heard and considered for impacts on the Commission's standards.
    b. The applicant presented an updated revegetation plan using native plantings for a 1:1 replacement ratio.
    c. The Commission questioned the status of other agencies' review of the project.
        i. The applicant's agent stated that the US Fish and Wildlife Service had advised that the work window be limited to November to April.
    d. The applicant's representatives estimated that the finished pier, including railings, would be approximately 26 feet above the water at low tide.
    e. The applicant's agent clarified that the previously proposed classroom on the pier head had been removed from the proposal.

RELEVANT STANDARDS OF THE ACT

§957-A. Resource Protection District | §957-C. General Development District | §959-A. Requirements for granting permits | §962. General Performance Standards | Chapter 102: Standard Conditions of Approval | Chapter 103: Standards to Address the Environmental Factors

BASED ON THE ABOVE FINDINGS, as determined at a duly noticed Commission Meeting, the Commission draws the following conclusions:

1. The applicant has shown the proposed design to be within the meaning of the Act.
2. The proposed use will not unreasonably involve any of the factors enumerated in §959-A(1)(A)-(K) of the Act.

THEREFORE, the Commission APPROVES the application of the University of New England, #20-491, for a permit to construct a research pier with associated development on the property owned by them, provided the activity is carried out according to the application and UPON THE FOLLOWING CONDITIONS:

1. Standard Conditions of Approval (copy attached).
2. All in-water portions of the existing research pier shall be removed.

This decision, including any of its conditions, may be appealed pursuant to 38 M.R.S. §968, except that no appeal pursuant to 38 M.R.S. §968 shall be taken from a decision of the Commission which decision was made without a public hearing until a request for reconsideration has been submitted to the Commission, and the Commission has made a final determination in the matter. Any person wishing to file an appeal or to request reconsideration must do so within 30 days of the Commission's written decision and order. Requests for reconsideration must be submitted in accordance with applicable Commission regulations. To be valid, all permits must meet all federal, state, and local ordinances and regulations.

DONE AND DATED AT CORNISH, MAINE, THIS 13TH DAY OF SEPTEMBER 2024.

SACO RIVER CORRIDOR COMMISSION

BY: Ben Pinault 9/13/24

Benjamin Pinault, Chairperson — Dated



Registry of Deeds Notarization Form
Saco River Corridor Commission Permit #20-491 University of New England

Acknowledgment

State of Maine
County of York

This record was acknowledged before me on this 13th day of September 2024 by Benjamin Pinault.

Haley L. Lachance
Signature of Notary Public

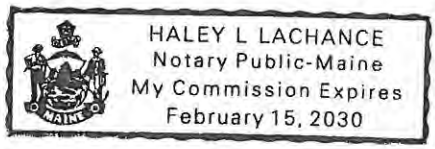

Haley Lachance
Notary Public, State of Maine
My commission expires: February 15, 2030

STATE OF MAINE
DEPARTMENT OF ENVIRONMENTAL PROTECTION
17 STATE HOUSE STATION AUGUSTA, MAINE 04333-0017

DEPARTMENT ORDER

IN THE MATTER OF

UNIVERSITY OF NEW ENGLAND	) NATURAL RESOURCES PROTECTION ACT
Biddeford, York County	) COASTAL WETLAND ALTERATION
COMMERCIAL PIER SYSTEM	) WATER QUALITY CERTIFICATION
L-18314-4P-BE-N (approval)	) FINDINGS OF FACT AND ORDER

Pursuant to the provisions of 38 M.R.S. §§ 480-A–480-JJ, Section 401 of the Clean Water Act (33 U.S.C. § 1341), and Chapters 310, 315, and 335 of Department rules, the Department of Environmental Protection (Department) has considered the application of UNIVERSITY OF NEW ENGLAND (applicant) with the supportive data, agency review comments, public comments, and other related materials on file and FINDS THE FOLLOWING FACTS:

1. PROJECT DESCRIPTION:

A. History of Project: In Department Order #L-18314-22-A-N, dated April 12, 1993, the Department granted after-the-fact approval to the University of New England for an expansion of the main campus. In Department Order #L-18314-22/31-J-M, dated December 19, 1996, the Department approved the construction of athletic facilities, a service road, a pier system, and seasonal floating dock on the Saco River. In Department Order #L-18314-22-L-A, dated May 31, 2000, the Department approved the construction of the Marine Science and Research Center and included a modification to the pier and floating dock. In Department Order #L-18314-22-AY-M/L-18314-4P-AZ-M, dated July 13, 2017, the Department approved the addition of two six-foot wide by 16-foot long seasonal floats attached seaward and perpendicular to the existing permanent floats oriented parallel to shore. A second, seasonal pier system was installed on Jordan Point in 2016. In Department Order #L-18314-22-BC-M/4P-BD-N, dated December 7, 2023, the Department approved the replacement of the second seasonal pier with a permanent pier system consisting of a six-foot wide by 63-foot long fixed pier, an existing four-foot wide by 48-foot long seasonal aluminum gangway, and an existing 10-foot long by 60-foot wide seasonal float system. The completed project resulted in 16 square feet of direct impacts and 1732 square feet of indirect impacts to the coastal wetland.

B. Summary: The applicant proposes to construct a new commercial size pier to provide all-tide access for the Marine Science Center and dock space for the City of Biddeford fireboat used for public safety. The proposed permanent pier structure will be built in three sections: section one consist of a 23-foot wide by 30-foot deck with a security gate, that connects to the second 14-foot wide by 100-foot long pier structure that seaward into the river, and the third pier section a 23-foot wide an 80-foot long pier head that will be oriented parallel to shore and a five-foot wide by 80-foot long permanent gangway perpendicular to the shore. The pier head and gangway will be flanked by four permanent floats running end to end parallel to shore; an 8-foot wide by

24-foot long float an 8-foot wide by 27-foot long float, a 12-foot wide by 30-foot long gangway landing float to provide all-tide access on the west side of the pier and a six-foot wide by 20-foot float to provide a tie-up location for the City of Biddeford's Fire Boat on the east side of the pier, both perpendicular to the shore. The pier system will be supported by 25 concrete-filled steel pipe piles and a concrete abutment which connects the pier to the proposed access road. The project as proposed will result in 84 square feet of direct impacts to the coastal wetland due to pilings, and 3,579 square feet of indirect impacts to the coastal wetland due to shading from the pier, ramp, and floats. The large size of the pier and gangway will accommodate an outdoor covered classroom, ADA-compliant access and fireboat tiedown float, and vehicular access to the pier for transportation of research and emergency equipment. Between this proposed pier and the currently existing pier system, cumulative direct impacts to the coastal wetland will total 100 square feet, and cumulative indirect impacts to the coastal wetland will total 5,311 square feet.

In addition to the proposed pier system, an upland access road connecting the existing road to the proposed pier will be constructed, including associated site grading, drainage, and stormwater management features. Work on the access road will result in approximately 475 square feet of impacts adjacent to the coastal wetland. Upland work proposed will not exceed 40,000 square feet of additional disturbed area and thus is exempt from permitting pursuant to M.R.S 38 §488(27)(A).

The proposed project is shown on a set of plans, the first of which is titled "University of New England Marine Science Center Pier", completed by GEI Consultants, Inc. and dated April 22, 2024. The project site is located at 11 Hills Beach Road in the Town of Biddeford.

C. Current Use of the Site: The project site is located on an approximately 50-acre parcel of land that is developed with various university buildings and a permanent pier system. The parcel is identified as Lot 4 on Map 52 of the City of Biddeford's tax maps.

D. Public Interest: The Department received emails from one individual between September 4 and December 11, 2024. The interested person expressed concerns related to the Town's project review process. Additionally, the interested person stated that the applicant did not consider alternative locations for the pier that would be less impactful to the resource. After reviewing the application, the Department determined that the applicant provided a sufficient alternative analysis which is further discussed in Section 4.

The interested person submitted a public hearing request on July 1, 2024. The request was reviewed by the Department and a response sent on August 20, 2024, citing that the application did not meet the Chapter 2 criteria for the Board to hold a hearing.

2. EXISTING SCENIC, AESTHETIC, RECREATIONAL OR NAVIGATIONAL USES:

The Natural Resources Protection Act (NRPA), in 38 M.R.S. § 480-D(1), requires the applicant to demonstrate that the proposed project will not unreasonably interfere with existing scenic, aesthetic, recreational and navigational uses.

In accordance with Chapter 315, *Assessing and Mitigating Impacts to Scenic and Aesthetic Uses* (06-096 C.M.R. ch. 315, effective June 29, 2003), the applicant submitted a copy of the Department's Visual Evaluation Field Survey Checklist as Appendix A to the application along with a description of the property and the proposed project. The applicant also submitted several photographs of the proposed project site and surroundings including an aerial photograph of the project site.

The proposed project is located in the Saco River, which is a scenic resource visited by the general public, in part, for the use, observation, enjoyment and appreciation of its natural and cultural visual qualities. Given the piers on abutting properties and the existing pier on the same parcel, the proposed pier will not substantially alter the visual aesthetic of the riverbank from the river. The proposed pier system is of similar size, scale, and design as nearby pier systems, including a commercial marina with slips located directly across the river and visible from the project site.

The Department staff utilized the Department's Visual Impact Assessment Matrix in its evaluation of the proposed project and the Matrix showed an acceptable potential visual impact rating for the proposed project. Based on the information submitted in the application and the visual impact rating, the Department determined that the location and scale of the proposed activity is compatible with the existing visual quality and landscape characteristics found within the viewshed of the scenic resource in the project area.

The Department of Marine Resources (DMR) reviewed the project and stated that the proposed project should not cause any significant adverse impact to navigation or recreation based on the nature of the project and its location.

The Department finds that the proposed activity will not unreasonably interfere with existing scenic, aesthetic, recreational or navigational uses of the river.

3. SOIL EROSION:

The NRPA, in 38 M.R.S. § 480-D(2), requires the applicant to demonstrate that the proposed project will not cause unreasonable erosion of soil or sediment nor unreasonably inhibit the natural transfer of soil from the terrestrial to the marine or freshwater environment.

Construction will take place from the upland and by barge. Access by land will occur on existing roads, and the proposed new road will be started early in construction to provide an additional route for construction access, material deliveries, and staging. When the site is being accessed by barge, the contractor will avoid the nearby federal navigation

channel and adjacent waterfront facilities during construction activity. Any work within the resource will be conducted in compliance with the standard November 8th-April 9th in-water work window discussed in Finding 4. A certified erosion control contractor will be on site.

The Department finds that the activity will not cause unreasonable erosion of soil or sediment nor unreasonably inhibit the natural transfer of soil from the terrestrial to the marine or freshwater environment.

4. HABITAT CONSIDERATIONS:

The NRPA, in 38 M.R.S. § 480-D(3), requires the applicant to demonstrate that the proposed project will not unreasonably harm significant wildlife habitat, freshwater wetland plant habitat, threatened or endangered plant habitat, aquatic or adjacent upland habitat, travel corridor, freshwater, estuarine or marine fisheries or other aquatic life.

The project site consists of ledge in the upper intertidal, grading to rockweed-covered rocky shore then to mixed coarse and fine sediments. Eelgrass resources were documented in the subtidal near the project area prior to 1997 but have not been mapped in recent years.

In its review, the Department of Marine Resources (DMR) stated that the project as proposed would have direct impacts to marine resources and habitat in the footprint of the pier, and recommended that if piles are driven outside of the winter work window of November 8th-April 9th. The mouth of the Saco River is utilized by diadromous fish species including Atlantic Salmon, alewife, and sea run brook trout. Atlantic and short nose sturgeon may be present year round in this area.. DMR further recommended that the applicant use a vibratory hammer or a bubble screen for noise mitigation.

The applicant concurred that work will only occur during the winter work window.

According to the Department's Geographic Information System (GIS) database there are no mapped Essential or Significant Wildlife Habitats located at the site. The Maine Department of Inland Fisheries and Wildlife (MDIFW) reviewed the proposed project and stated that the project is located adjacent to but outside of Tidal Waterfowl and Wading Bird Habitat (TWWH), a designated Significant Wildlife Habitat. MDIFW stated that minimal impacts to piping plover and Blanding's turtle habitat are anticipated and provided general recommendations including minimizing vegetation removal and soil disturbance, and that time spent in the water should be minimized to the greatest extent practicable.

The applicant responded to these comments, and agreed to minimize vegetation removal, soil disturbance, and time spent in the water.

The Department finds that the activity will not unreasonably harm any significant wildlife habitat, freshwater wetland plant habitat, threatened or endangered plant habitat, aquatic

or adjacent upland habitat, travel corridor, freshwater, estuarine or marine fisheries or other aquatic life provided in-water work is only conducted between November 8th-April 9th of any given year

5. WATER QUALITY CONSIDERATIONS:

The applicant proposes to use lumber treated with chromated copper arsenate (CCA) to construct the pier. To protect water quality, all CCA-treated lumber must be cured on dry land in a manner that exposes all surfaces to the air for 21 days prior to the start of construction.

Provided that CCA-treated lumber is cured as described above, the Department finds that the proposed project will not violate any state water quality law, including those governing the classification of the State's waters.

6. WETLANDS AND WATERBODIES PROTECTION RULES:

The proposed project will result in 84 square feet of direct impacts and 4,784 square feet of indirect impacts to the coastal wetland from the new pier system. The overall cumulative impacts from the existing pier and proposed project will be 100 square feet of direct impacts to the coastal resource and 5,311 square feet of indirect impacts to the coastal resource. Coastal wetlands are wetlands of special significance.

The *Wetlands and Waterbodies Protection Rules*, 06-096 C.M.R. ch. 310 (last amended November 11, 2018), interpret and elaborate on the Natural Resources Protection Act (NRPA) criteria for obtaining a permit. The rules guide the Department in its determination of whether a project's impacts would be unreasonable. A proposed project would generally be found to be unreasonable if it would cause a loss in wetland area, functions and values and there is a practicable alternative to the project that would be less damaging to the environment. Each application for a NRPA permit that involves a coastal wetland alteration must provide an analysis of alternatives in order to demonstrate that a practicable alternative does not exist.

A. Avoidance. An applicant must submit an analysis of whether there is a practicable alternative to the project that would be less damaging to the environment and this analysis is considered by the Department in its assessment of the reasonableness of any impacts. Additionally, for activities proposed in, on, or over wetlands of special significance the activity must be among the types listed in Chapter 310, § 5(A) or a practicable alternative less damaging to the environment is considered to exist and the impact is unreasonable. A pier is a water dependent use and its proposed construction is among the activities specifically provided for in Chapter 310, § 5(A)(1)(c). Additionally, any project related to health and safety is among the activities specifically provided for in Chapter 310, § 5(A)(1)(a).

The applicant submitted an alternatives analysis for the proposed project completed by Site Design Associates and dated June 17, 2024, with a last revision date of December

10, 2024. The purpose of the proposed project is to provide all-tide, year-round access to the resource for research and education operations associated with the Arthur P. Girard Marine Science Center (GMSC) at the University of New England. A secondary project purpose is to provide docking space for the City of Biddeford's fireboat for emergency response and safety. The applicant plans to launch a variety of research vessels from the proposed pier, including a 31-foot long research vessel and potentially larger ones in the future. The City's fireboat is 19 feet long. The applicant considered not building the new pier system and instead utilizing the existing pier on the parcel; however, this existing pier is seasonal, including the floats that are hauled out of the water each winter limiting year-round access that is required to support the a Universities' marine science programs. Additionally, the existing pier does not provide a docking area for the City of Biddeford's fireboat. Therefore, this alternative was rejected. The applicant considered a seasonal gangway and l floats; however, research and access to the water is required for emergency response from the City and for year-round, all-tide access to the resource for educational purposes. Finally, the applicant considered using public facilities including marinas, boat launches and moorings to moor and launch research vessels; however, access to the water can be time-sensitive due to course schedules or the need to access the water during certain tide cycles. With shuttling of staff, students, and equipment, and the lack of reliable parking, this alternative was rejected. The private marinas in the area have long waitlists for private slips and do not have the capacity to handle the frequent use and group size that the University requires to meet their education and research mission

B. Minimal Alteration. In support of an application and to address the analysis of the reasonableness of any impacts of a proposed project, an applicant must demonstrate that the amount of coastal wetland to be altered will be kept to the minimum amount necessary for meeting the overall purpose of the project. During the planning phase of this project, the applicant selected the pier location with the shortest length necessary to reach adequate water depths for all -tide access. In addition, the dimensions of the pier head were reduced from 28-feet wide by 100-feet long to the currently proposed 23-feet wide by 80-feet long to reduce impacts to the coastal resource.

C. Compensation. In accordance with Chapter 310, § 5(C)(6)(b), compensation may be required to achieve the goal of no net loss of coastal wetland functions and values. This project will not result in over 500 square feet of fill in the resource, which is the threshold over which compensation is generally required. Further, the proposed project will not have an adverse impact on marine resources or wildlife habitat as determined by DMR and MDIFW. For these reasons, the Department determined that compensation is not required.

The Department finds that the applicant has avoided and minimized coastal wetland impacts to the greatest extent practicable, and that the proposed project represents the least environmentally damaging alternative that meets the overall purpose of the project.

7. OTHER CONSIDERATIONS:

The Department finds, based on the design, proposed construction methods, and location, the proposed project will not inhibit the natural transfer of soil from the terrestrial to the marine environment, will not interfere with the natural flow of any surface or subsurface waters, and will not cause or increase flooding. The proposed project is not located in a coastal sand dune system, is not a crossing of an outstanding river segment, and does not involve dredge spoils disposal or the transport of dredge spoils by water.

BASED on the above findings of fact, and subject to the conditions listed below, the Department makes the following conclusions pursuant to 38 M.R.S. §§ 480-A–480-JJ and Section 401 of the Clean Water Act (33 U.S.C. § 1341):

A. The proposed activity will not unreasonably interfere with existing scenic, aesthetic, recreational, or navigational uses.

B. The proposed activity will not cause unreasonable erosion of soil or sediment.

C. The proposed activity will not unreasonably inhibit the natural transfer of soil from the terrestrial to the marine or freshwater environment.

D. The proposed activity will not unreasonably harm any significant wildlife habitat, freshwater wetland plant habitat, threatened or endangered plant habitat, aquatic or adjacent upland habitat, travel corridor, freshwater, estuarine, or marine fisheries or other aquatic life provided winter work windows are utilized as described in Finding 3.

E. The proposed activity will not unreasonably interfere with the natural flow of any surface or subsurface waters.

F. The proposed activity will not violate any state water quality law including those governing the classifications of the State's waters provided that CCA-treated lumber is cured as described in Finding 5.

G. The proposed activity will not unreasonably cause or increase the flooding of the alteration area or adjacent properties.

H. The proposed activity is not on or adjacent to a sand dune.

I. The proposed activity is not on an outstanding river segment as noted in 38 M.R.S. § 480-P.

THEREFORE, the Department APPROVES the above noted application of UNIVERSITY OF NEW ENGLAND to construct a research pier as described in Finding 1, SUBJECT TO THE ATTACHED CONDITIONS, and all applicable standards and regulations:

1. Standard Conditions of Approval, a copy attached.

2. The applicant shall take all necessary measures to ensure that their activities or those of their agents do not result in measurable erosion of soil on the site during the construction of the project covered by this approval.

3. Severability. The invalidity or unenforceability of any provision, or part thereof, of this License shall not affect the remainder of the provision or any other provisions. This License shall be construed and enforced in all respects as if such invalid or unenforceable provision or part thereof had been omitted.

4. Construction is only allowed from November 8th-April 9th of any given year.

5. All CCA-treated lumber shall be cured on dry land in a manner that exposes all surfaces to the air for 21 days prior to the start of construction.

THIS APPROVAL DOES NOT CONSTITUTE OR SUBSTITUTE FOR ANY OTHER REQUIRED STATE, FEDERAL OR LOCAL APPROVALS NOR DOES IT VERIFY COMPLIANCE WITH ANY APPLICABLE SHORELAND ZONING ORDINANCES.

DONE AND DATED IN AUGUSTA, MAINE, THIS 11TH DAY OF APRIL, 2025.

DEPARTMENT OF ENVIRONMENTAL PROTECTION

BY:_____
For: Melanie Loyzim, Commissioner

PLEASE NOTE THE ATTACHED SHEET FOR GUIDANCE ON APPEAL PROCEDURES.

PCS/L18314BEN/ATS#92653

DEPARTMENT OF THE ARMY
U.S. ARMY CORPS OF ENGINEERS, NEW ENGLAND DISTRICT
NEW ENGLAND DISTRICT OFFICE
696 VIRGINIA ROAD
CONCORD MASSACHUSETTS 01742-2751

March 28, 2025

Regulatory Division

Andrew Phillippe
University of New England
11 Hills Beach Road
Biddeford, Maine 04005
Via Email: aphilippe@une.edu

Dear Mr. Phillippe:

This letter is in response to the application you submitted to the U.S. Army Corps of Engineers (USACE), New England District on June 21, 2024 for a Department of the Army general permit verification. We have assigned this project file number NAE-2024-01628, which you should reference in all correspondence with this office.

A review of the information provided indicates the proposed work includes the construction of a permanent pier consisting of a 28-foot long by 24-foot-wide landing; a 90-foot long by 14-foot-wide approach pier; and an 80-foot long by 24-foot-long pier. Additionally, your project includes a floating dock system consisting of an 80-foot long by 5-foot-wide gangway; a 30-foot long by 12-foot wide float; a 24-foot long by 8-foot wide float; and a 27-foot long by 8-foot wide float, and a 20-foot long by 6-foot wide float. The project is located in the Saco River; at 11 Hills Beach Road, at Latitude 43.458630º and Longitude -70.389050º; in Biddeford, York County, Maine. The work is shown on the enclosed plans titled “University of New England Marine Science Center Pier”, on 38 sheets, and dated 8/14/2024.

Based on the information you have provided; we verify that the activity is authorized under General Permit *2. Structures, Floats, and Lifts* of the October 14, 2020, federal permit known as the Maine General Permits (GPs). If the extent of the project area and/or nature of the authorized impacts to waters are modified, a revised application must be submitted to this office for written approval before work is initiated. You can find a copy of these permits at:
https://www.nae.usace.army.mil/Missions/Regulatory/State-General-Permits/

Any deviation from the terms and conditions of the permit, or your submitted plans, may subject the permittee to the enforcement provisions of our regulations. Therefore, in the event changes to this project are contemplated, it is recommended you coordinate with this office prior to proceeding with the work. This office must approve any changes before you undertake them. You must perform this work in compliance

with the terms and conditions of the GPs listed above, and also in compliance with the following special conditions:

1. The permittee shall complete and return the enclosed Work-Start Notification Form to this office at least two weeks prior to the anticipated construction start date.

2. The permittee shall complete and return the enclosed Completion Certification Form to this office at least one month following the completion of the authorized work.

3. You must maintain the activity herein in good condition and in conformance with the terms and conditions of this authorization. You are not relieved of this requirement if you abandon the permitted activity, although you may make a good faith transfer to a third party in compliance with a general condition of these GPs. Should you wish to cease to maintain the authorized activities, or should you desire to abandon it without a good faith transfer, you must obtain a modification of this authorization from this office, which may require restoration of the area.

4. All construction shall be completed in accordance with the limits of construction and construction sequences detailed on the enclosed plan drawings, titled “University of New England Marine Science Center Pier,” on a total of 38 sheets, and dated 8/14/2024. If you change the plans or construction methods for work within or adjacent to the Saco River, please contact us immediately to discuss modification of this authorization. The USACE must approve any changes before you undertake them.

5. A “soft start” is required to allow animals an opportunity to leave the project vicinity before sound pressure levels increase. In addition to using a soft start at the beginning of the workday for pile driving, one must also be used at any time following cessation of pile driving for a period of 30 minutes or longer.

a) For impact pile driving: Pile driving will commence with an initial set of three strikes by the hammer at 40% energy, followed by a one-minute wait period, then two subsequent 3-strike sets at 40% energy, with one-minute waiting periods, before initiating continuous impact driving.

b) For vibratory pile installation: Pile driving will be initiated for 15 seconds at reduced energy followed by a one-minute waiting period. This sequence of 15 seconds of reduced energy driving, one-minute waiting period will be repeated two additional times, followed immediately by pile-driving at full rate and energy.

6. The work authorized herein shall not be conducted during the time of year (TOY) restriction of April 10 to November 7 in order to minimize adverse impacts to the Atlantic sturgeon, shortnose sturgeon.

This verification is valid until October 14, 2025. You must commence or be under contract to commence the work authorized herein by October 14, 2025 and complete

the work by October 14, 2026. If not, you must contact this office to determine the need for further authorization before beginning or continuing the activity. It is recommended that you contact this office before this authorization expires to discuss if permit reissuance is a possibility.

This GP verification and any associated authorizations does not preclude the necessity to obtain any other federal, state, or local permits, licenses, and/or certifications, which may be required.

If you have any questions related to this verification or have issues accessing documents referenced in this letter, please contact Jana Jacobson, Project Manager at (207) 233-2117, or by email at Jana.L.Jacobson@usace.army.mil. This agency continually strives to improve our customer service. To better serve you, please complete the Customer Service Survey located at: https://regulatory.ops.usace.army.mil/customer-service-survey/.

Sincerely,

Jon T. Coleman
Team Leader
Technical Regional Execution Center
North Atlantic Division

Enclosures

Cc (w/enclosures):
Tom Saucier, Site Design Associates (via tsaucier@sitedesignassociates.biz)

Attachment 10
MHPC Clearance

MAINE HISTORIC PRESERVATION COMMISSION
55 CAPITOL STREET
65 STATE HOUSE STATION
AUGUSTA, MAINE
04333

JANET T. MILLS
GOVERNOR

KIRK F. MOHNEY
DIRECTOR

May 15, 2023

Mr. Tom Saucier, P.E.
Site Design Associates
23 Whitney Way
Topsham, Maine 04086

Project: MHPC# 0500-23 University of New England; 11 Hills Beach Road
Permanent Pier and Float System

Town: Biddeford, ME

Dear Mr. Saucier:

In response to your recent request, I have reviewed the information received April 13, 2023 to initiate consultation on the above referenced projects in accordance with Section 106 of the National Historic Preservation Act of 1966, as amended (NHPA).

Dr. Arthur Spiess of my staff has carefully reviewed our February 7, 2000 letter concerning areas of archaeological site significance on the UNE campus, and the Phase III report that formed the background of these recommendations. We note that some of the areas of the proposed access road and the head of the pier fall outside of the areas found not to be contributing to the overall significance of the archaeological site(s) on the UNE campus (specifically areas 99.1, 99.2 and 99.8. Moreover, the intensity of previous archaeological testing along the now-proposed access road (especially within area 99.1).

Based on the information submitted, I have concluded that the proposed work will have **no adverse effect** upon historic properties.

However, our finding is *conditional* upon the following:

1) We recommend that one or more archaeologists monitor the initial clearing of soil from the route of the access road and be allowed enough time to recover information from any subsoil features that are present. It would be most important to monitor the access road from the curve in the road to be located just east of the north wall of the marine science center to the head of the proposed pier.

Please contact Megan M. Rideout at (207) 287-2992 or megan.m.rideout@maine.gov if we can be of further assistance in this matter.

Sincerely,

Kirk F. Mohney

Kirk F. Mohney
State Historic Preservation Officer

PHONE: (207) 287-2132 FAX: (207) 287-2335

Attachment 11
Notice to Proceed
With External Reviews

City of Biddeford, Maine

The Office of
City Manager
James A. Bennett
Email: james.bennett@biddefordmaine.org

August 19, 2024

University of New England
11 Hills Beach Road
Biddeford, Maine 04005

Attention: Mr. Alan Thibeault, VP of University Operations

RE: Notice to Proceed with External Reviews

Dear Mr. Thibeault,

On August 9, 2024, I received written clarification from Mr. Wayne Duffett, PE of TECAssociates that UNE's proposed Research Pier and Float System has complied with City Code 74-35 subsections (c) 1-10. Those sections are as follows:

(1) A formal boundary survey that has been documented at the Registry of Deeds.
(2) A copy of the boundary survey showing the littoral zone, established by extending property lines seaward.
(3) A location map from a portion of a USGS topographic map or coastal chart.
(4) Distance to navigable channels or any federal navigation project.
(5) Mean high- and low-water boundary.
(6) A plan view on the drawing(s) that shows the location and dimensions of the applicant's structure(s) in relation to the applicant's property lines.
(7) A typical cross section/side view of the applicant's structures on the drawing(s).
(8) Evidence that owners of abutting properties have been notified of the applicant's intended project.
(9) Evidence that the 1) Maine Historic Preservation Commission, 2) Aroostook Band of Micmac, 3) Passamaquoddy Tribe of Indians: Pleasant Point; Indian Township, 4) Houlton Band of Maliseet Indians, and 5) Penobscot Indian Nation have been notified of the applicant's intended project.
(10) Completed applications to the Army Corps of Engineers, Department of Environmental Protection and Biddeford Code Enforcement. A regulatory permit from the Saco River Corridor Commission may also be required in some instances.

Based on this information and in harmony with my earlier communications, please consider this as formal notification from the City of Biddeford that the application has been found in compliance with

the above mention City Code. That finding allows the application to proceed in the next steps of the review process; namely formal review by all agencies except those that are part of the City of Biddeford. After each and all of those processes are complete, the City will move forward with the final review(s) by agents and Committees of the City.

While I don't believe it is necessary, let me empathically state that this communication does not in any form, imply that the City has in any way made a determination that the location submitted has been approved. Said approval will considered after completion of all process and in compliance with applicable laws, regulations. This includes all local ordinances.

Please feel free to reach out to me if you have any questions

Sincerely,

James A. Bennett
City Manager

CC: Biddeford Mayor and City Council

Attachment 12
Photo of shed



Attachment 13
Light Fixture Information

BEACON
design . performance . technology

URBAN SERIES
URBAN LUMINAIRE

DATE: | LOCATION:

TYPE: | PROJECT:

CATALOG #:

FEATURES

- Decorative transitional style lighting fixture series is suitable for walkway lighting and wall mounting
- Two unique shade and style options
- LED turtle-friendly option available
- Integral Surge and Thermal Protection


Shown with arm

C US

*3000K and warmer CCTs only

CONTROL TECHNOLOGY

energeni

SPECIFICATIONS

CONSTRUCTION
- The drivers shall be located in the top cast housing and shall be accessible without tools by hinging the lower shade assembly. The driver and all electrical components shall be on a tray
- The lower shade shall be made from a one-piece aluminum spinning
- The housing is designed for LED thermal management without the use of metallic screens, cages, or fans. The top casting shall be able to be pendent mounted in place with a stainless steel safety pin and then permanently held in place with four stainless steel bolts

ELECTRICAL
- 100V through 277V, 50 Hz to 60 Hz (UNV), or 347V or 480V input
- Power factor is ≥0.90 at full load
- Dimming drivers are standard with connections for external dimming equipment available upon request
- Component-to-component wiring within the luminaire may carry no more than 80% of rated load and is listed by UL for use at 600VAC at 50°C or higher
- Plug disconnects are listed by UL for use at 600 VAC, 13A or higher. 13A rating applies to primary (AC) side only
- Fixture electrical compartment shall contain all LED driver components
- Button photocell available
- Ambient operating temperature -40°C to 40°C

ELECTRICAL (CONTINUED)
- Surge protection - 20KA
- Lifeshield™ Circuit - protects luminaire from excessive temperature. The device shall activate at a specific, factory-preset temperature, and progressively reduce power over a finite temperature range. A luminaire equipped with the device may be reliably operated in any ambient temperature up to 55°C (131°F). Operation shall be smooth and undetectable to the eye. Thermal circuit is designed to “fail on”, allowing the luminaire to revert to full power in the event of an interruption of its power supply, or faulty wiring connection to the drivers. The device shall be able to co-exist with other 0-10V control devices (occupancy sensors, external dimmers, etc.)

CONTROLS
- Available with Energeni for optional set dimming, timed dimming with simple delay, or timed dimming based on time of night visit

FINISH
- IFS polyester powder-coat electrostatically applied and thermocured
- IFS finish consists of a five stage pretreatment regimen with a polymer primer sealer and top coated with a thermoset super TGIC polyester powder coat finish
- The finish meets the AAMA 605.2 performance specification which includes passing a 3000 hour salt spray test for corrosion resistance and resists cracking or loss of adhesion per ASTM D522 and resists surface impacts of up to 160 inch-pounds

CERTIFICATIONS
- NRTL Certified, UL8750, UL 1598 and CSA22.2#250. 13-14 for wet locations
- IDA approved
- This product is approved by the Florida Fish and Wildlife Conservation Commission. Separate spec available.

WARRANTY
- 5 year warranty

KEY DATA	
Lumen Range	3,300–13,000
Wattage Range	27.8–137.5
Efficacy Range (LPW)	61–87

© 2024 Current Lighting Solutions, LLC. All rights reserved. Information and specifications subject to change without notice. All values are design or typical values when measured under laboratory conditions.

BEACON
design . performance . technology

URBAN SERIES
URBAN LUMINAIRE

DATE: LOCATION:
TYPE: PROJECT:
CATALOG #:

ORDERING GUIDE

Example: URB–CAP-21–36L-120–5K7–UNV–4–NRNW–BLT

CATALOG #

Model	Lens Option	Engine–Watts	CCT/CRI[4]	Voltage	Optics[2]	Electrical Options
URB Urban	**CAP-21** 21" Capitol	**18L-25** 25W, LED array	**3K7** 3000K, 70 CRI	**UNV** 120-277V	**FR** Type I	**PCU** Button Photocell, Universal
	MRDS-21 21" Miramar deep shade	**18L-39** 39W, LED array	**4K7** 4000K, 70 CRI	**347** 347V	**2** Type II	
	MAR-21 21" Maritas	**18L-50** 50W, LED array	**5K7** 5000K, 70 CRI	**480** 480V	**3** Type III	
	CAP-26 26" Capitol	**18L-70** 70W, LED array	**3K8** 3000K, 80 CRI		**4F** Type IV forward	
	MRSS-26 26" Miramar shallow shade	**18L-90** 90W, LED array	**4K8** 4000K, 80 CRI		**4W** Type IV wide	
	MRDS-26 26" Miramar deep shade	**18L-110** 110W, LED array	**5K8** 5000K, 80 CRI		**5QN** Type V square narrow	
	MAR-26 26" Maritas	**36L-120** 120W, LED array	**AM** Monochromatic Amber, 595nm		**5QW** Type V square wide	
		36L-135 135W, LED array			**5RW** Type V rectangular wide	
		36L-155 155W, LED array			**5W** Type V round wide	
		36L-175 175W, LED array			**BC** Backshield (available for FR, 2, 3, 4, 4W Opctics)	

Control Options	Mounting Style	Style	Finish	Options
GENI-XX Energeni[3]	**PM** Pendant mount	**NRNW** No rings	**BLT** Black Matte Textured	**BC** Backlight Control
XX - Please specify	**SM** Side mount	**3RNW** Three rings	**BLS** Black Gloss Smooth	
	YM3 Yoke mount, 3" OD		**DBT** Dark Bronze Matte Textured	
	YM4 Yoke mount, 4" OD		**DBS** Dark Bronze Gloss Smooth	
	YM5 Yoke mount, 5" OD		**GTT** Graphite Matte Textured	
			LGS Light Grey Gloss Smooth	
			PSS Platinum Silver Smooth	
			WHT White Matte Textured	
			WHS White Gloss Smooth	
			VGT Verde Green Textured	
			Color Option	
			CC Custom Color	

Notes:
1 26" only
2 To rotate optics left or right 90 degrees, specify L or R after the optical distribution example: 4L
3 When ordering Energeni, specify the routine setting code (Example GENI-04). See Energeni brochure and Energeni instructions for setting table and options. Not available with sensor options
4 This product is approved by the Florida Fish and Wildlife Conservation Commission. Separate spec available on our website.

© 2024 Current Lighting Solutions, LLC. All rights reserved. Information and specifications subject to change without notice. All values are design or typical values when measured under laboratory conditions.

BEACON
design . performance . technology

URBAN SERIES

URBAN LUMINAIRE

PENDANT MOUNT



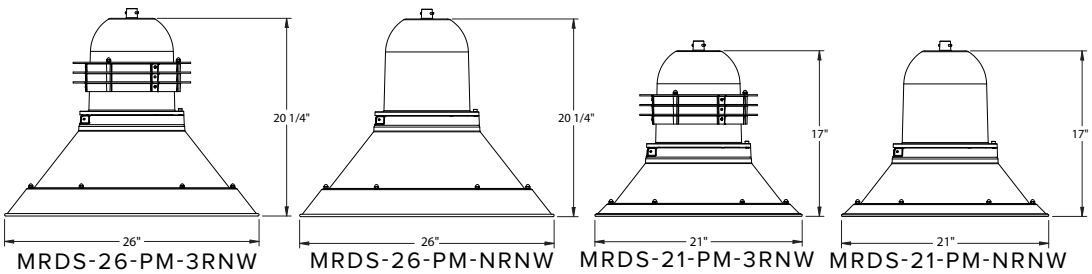

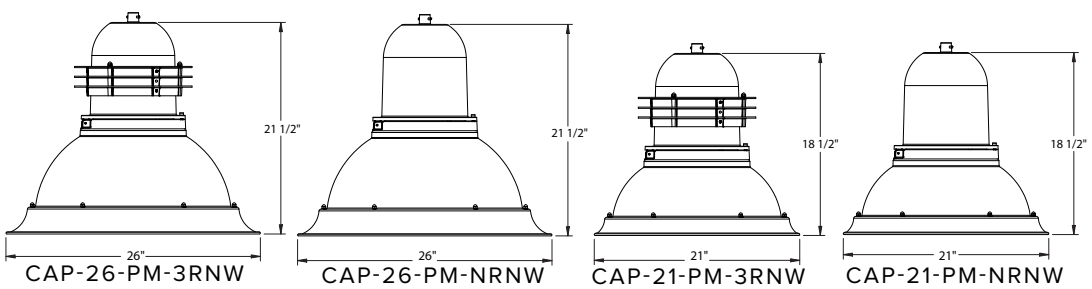

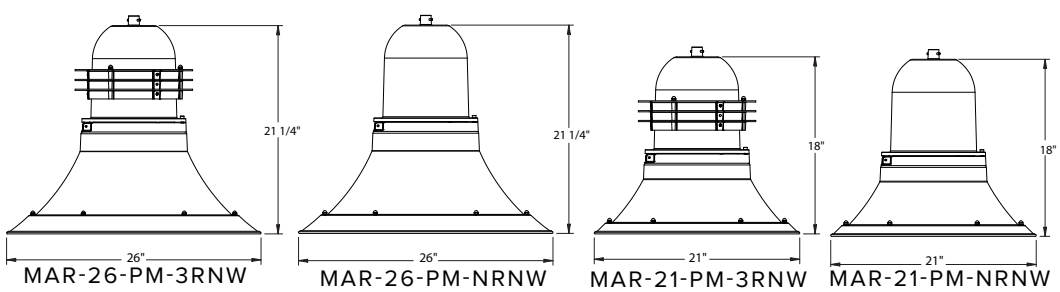

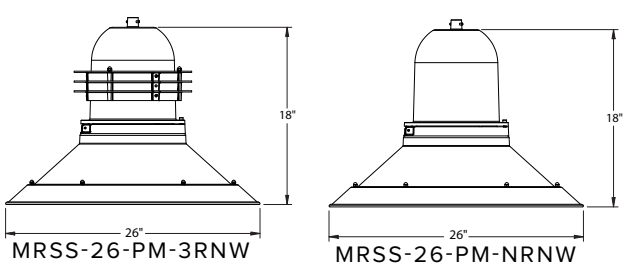

© 2024 Current Lighting Solutions, LLC. All rights reserved. Information and specifications subject to change without notice. All values are design or typical values when measured under laboratory conditions.

BEACON
design . performance . technology

URBAN SERIES

URBAN LUMINAIRE

SIDE MOUNT

* Arms ordered separately, arms mount over an open top pole, they do not mount to a tenon.



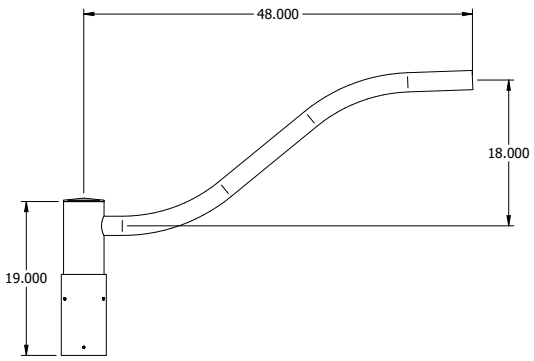

AA-10 COBRA

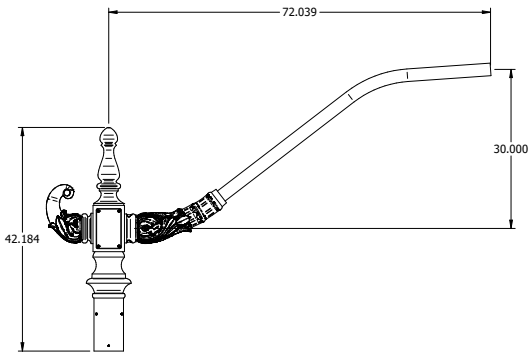

AA-10B COBRA BALBOA

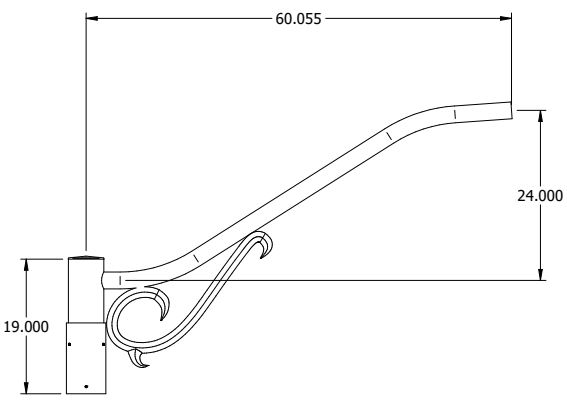

AA-10S COBRA SCROLL

© 2024 Current Lighting Solutions, LLC. All rights reserved. Information and specifications subject to change without notice. All values are design or typical values when measured under laboratory conditions.

BEACON
design . performance . technology

URBAN SERIES

URBAN LUMINAIRE

PENDANT MOUNT

* Arms ordered separately, arms mount over an open top pole, they do not mount to a tenon.



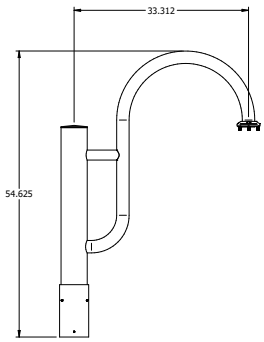

AA-41 RAILROAD STRAP

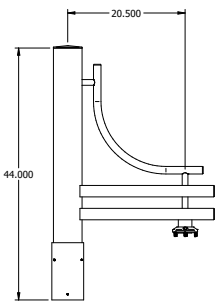

AA-10 SMALL PIERWALK

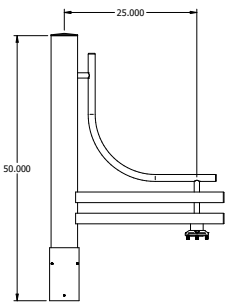

AA-38 LARGE PIERWALK

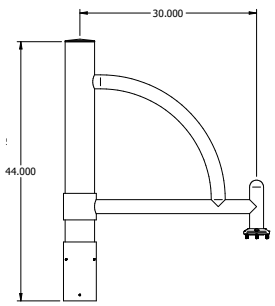

AA-49 RADIUS

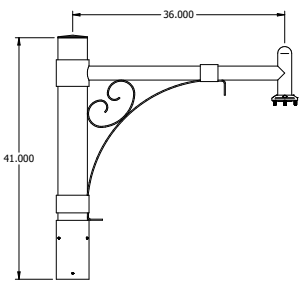

AA-27 STRATFORD

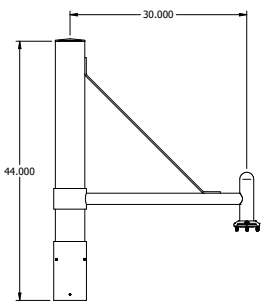

AA-44 STRUT

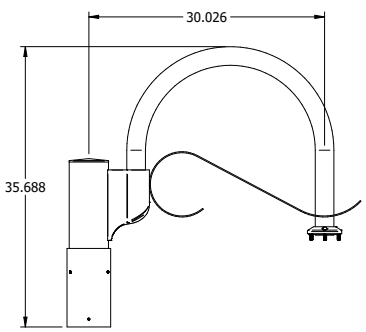

AA-45 TWIN EAGLES

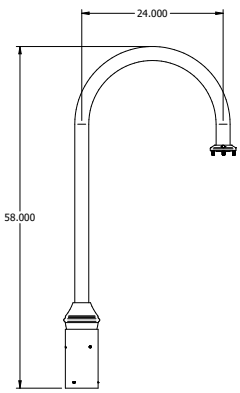

AA-39 RAILROAD

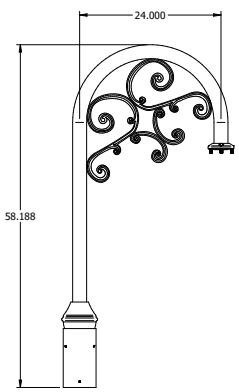

AA-39S RAILROAD SCROLL

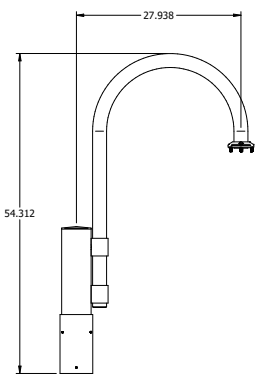

AA-42 RAILROAD SCS

© 2024 Current Lighting Solutions, LLC. All rights reserved. Information and specifications subject to change without notice. All values are design or typical values when measured under laboratory conditions.

BEACON
design . performance . technology

URBAN SERIES
URBAN LUMINAIRE

DELIVERED LUMENS

				5K7 (5000K nominal, 70 CRI)					4K7 (4000K nominal, 70 CRI)					3K7 (3000K nominal, 70 CRI)				
# of LEDs	NOMINAL WATTAGE (W)	SYSTEM WATTS (W)	DISTRIBUTION TYPE	LUMENS	LPW	B	U	G	LUMENS	LPW	B	U	G	LUMENS	LPW	B	U	G
18	25	27.8	FR	3428	123	0	0	0	3496	126	0	0	0	3233	116	0	0	0
			2	3236	117	1	0	1	3300	119	1	0	1	3052	110	1	0	1
			3	3164	114	1	0	1	3226	116	1	0	1	2983	107	1	0	1
			4F	3257	117	0	0	1	3321	120	0	0	1	3071	110	0	0	1
			4W	3114	112	1	0	1	3176	114	1	0	1	2937	106	1	0	1
			5QM	3398	122	2	0	0	3465	125	2	0	0	3204	115	2	0	0
			5QN	3431	124	2	0	0	3499	126	2	0	0	3236	116	2	0	0
			5QW	2937	106	2	0	1	2995	108	2	0	1	2770	100	0	0	0
			5RW	3150	113	2	0	2	3212	116	2	0	2	2970	107	2	0	2
			5W	3207	116	2	0	1	3271	118	2	0	1	3024	109	2	0	1
	39	45.1	FR	4977	110	0	0	0	5076	113	0	0	0	4694	104	0	0	0
			2	4699	104	1	0	1	4791	106	1	0	1	4431	98	1	0	1
			3	4593	102	1	0	1	4684	104	1	0	1	4332	96	1	0	1
			4F	4729	105	0	0	1	4822	107	0	0	1	4459	99	0	0	1
			4W	4522	100	1	0	1	4611	102	1	0	1	4264	95	1	0	1
			5QM	4934	110	2	0	0	5032	112	2	0	0	4653	103	2	0	0
			5QN	4982	111	2	0	0	5081	113	2	0	0	4698	104	2	0	0
			5QW	4522	100	3	0	1	4611	102	3	0	1	4264	95	3	0	1
			5RW	4573	101	2	0	2	4664	104	2	0	2	4313	96	2	0	2
			5W	4657	103	2	0	1	4749	105	2	0	1	4391	97	2	0	1
	50	57.5	FR	6019	105	0	0	0	6138	107	0	0	0	5676	99	0	0	0
			2	5682	99	1	0	1	5794	101	1	0	1	5358	93	1	0	1
			3	5555	97	1	0	1	5665	99	1	0	1	5238	91	1	0	1
			4F	5718	100	0	0	1	5831	101	0	0	1	5392	94	0	0	1
			4W	5468	95	1	0	1	5576	97	1	0	1	5156	90	1	0	1
			5QM	5967	104	2	0	0	6085	106	2	0	0	5627	98	2	0	0
			5QN	6025	105	2	0	0	6144	107	2	0	0	5682	99	2	0	0
			5QW	5468	95	3	0	1	5576	97	3	0	1	5156	90	3	0	1
			5RW	5531	96	2	0	2	5640	98	2	0	2	5215	91	2	0	2
			5W	5632	98	2	0	1	5743	100	2	0	1	5311	92	2	0	1
	70	62.4	FR	6650	107	0	0	0	6781	109	0	0	0	6271	100	0	0	0
			2	6277	101	1	0	1	6401	103	1	0	1	5919	95	1	0	1
			3	6137	98	1	0	1	6258	100	1	0	1	5787	93	1	0	1
			4F	6317	101	0	0	1	6442	103	0	0	1	5957	95	0	0	1
			4W	6041	97	1	0	1	6160	99	1	0	1	5696	91	1	0	1
			5QM	6592	106	2	0	0	6722	108	2	0	0	6216	100	2	0	0
			5QN	6656	107	2	0	0	6788	109	2	0	0	6277	101	2	0	0
			5QW	6041	97	3	0	1	6160	99	3	0	1	5696	91	3	0	1
			5RW	6110	98	2	0	2	6231	100	2	0	2	5762	92	2	0	2
			5W	6221	100	2	0	1	6344	102	2	0	1	5867	94	2	0	1

DELIVERED LUMENS CHART CONTINUED ONTO NEXT PAGE

Notes:

1 Lumen values are from photometric tests performed in accordance with IESNA LM-79-08. Data is considered to be representative of the configurations shown. Actual performance may differ as a result of end-user environment and application.

* Available in the 26" Urban only

© 2024 Current Lighting Solutions, LLC. All rights reserved. Information and specifications subject to change without notice. All values are design or typical values when measured under laboratory conditions.

BEACON
design . performance . technology

URBAN SERIES
URBAN LUMINAIRE

DELIVERED LUMENS (CONTINUED)

				5K7 (5000K nominal, 70 CRI)					4K7 (4000K nominal, 70 CRI)					3K7 (3000K nominal, 70 CRI)				
# of LEDs	NOMINAL WATTAGE (W)	SYSTEM WATTS (W)	DISTRIBUTION TYPE	LUMENS	LPW	B	U	G	LUMENS	LPW	B	U	G	LUMENS	LPW	B	U	G
18	90	82.3	FR	7681	93	0	0	0	7833	95	0	0	0	7244	88	0	0	0
			2	7251	88	1	0	1	7394	90	1	0	1	6838	83	1	0	1
			3	7089	86	1	0	1	7229	88	1	0	1	6685	81	1	0	1
			4F	7297	89	0	0	1	7442	90	0	0	1	6882	84	0	0	1
			4W	6978	85	1	0	1	7116	86	1	0	1	6580	80	1	0	1
			5QM	7614	93	2	0	0	7765	94	2	0	0	7180	87	2	0	0
			5QN	7689	93	2	0	0	7841	95	2	0	0	7251	88	2	0	0
			5QW	6978	85	3	0	1	7116	86	3	0	1	6580	80	3	0	1
			5RW	7058	86	2	0	2	7197	87	2	0	2	6656	81	2	0	2
			5W	7187	87	2	0	1	7329	89	2	0	1	6777	82	2	0	1
	110	98.7	FR	8346	85	0	0	0	8511	86	0	0	0	7870	80	0	0	0
			2	7878	80	1	0	1	8034	81	1	0	1	7429	75	1	0	1
			3	7702	78	1	0	1	7854	80	1	0	1	7263	74	1	0	1
			4F	7929	80	0	0	1	8085	82	0	0	1	7477	76	0	0	1
			4W	7582	77	1	0	1	7731	78	1	0	1	7150	72	1	0	1
			5QM	8273	84	2	0	0	8437	86	2	0	0	7802	79	2	0	0
			5QN	8354	85	2	0	0	8519	86	2	0	0	7878	80	2	0	0
			5QW	7582	77	3	0	2	7731	78	3	0	2	7150	72	3	0	2
			5RW	7668	78	2	0	2	7820	79	2	0	2	7231	73	2	0	2
			5W	7808	79	2	0	1	7963	81	2	0	1	7363	75	2	0	1
36	120	124.9	FR	12463	100	0	0	0	12709	102	0	0	0	11752	94	0	0	0
			2	11765	94	1	0	1	11997	96	1	0	1	11094	89	1	0	1
			3	11501	92	1	0	1	11728	94	1	0	1	10846	87	1	0	1
			4F	11840	95	0	0	1	12074	97	0	0	1	11165	89	0	0	1
			4W	11321	91	1	0	1	11545	92	1	0	1	10676	85	1	0	1
			5QM	12354	99	2	0	0	12598	101	2	0	0	11650	93	2	0	0
			5QN	12475	100	2	0	0	12722	102	2	0	0	11764	94	2	0	0
			5QW	11321	91	3	0	2	11545	92	3	0	2	10676	85	3	0	2
			5RW	11451	92	2	0	2	11677	93	2	0	2	10798	86	2	0	2
			5W	11660	93	2	0	1	11890	95	2	0	1	10995	88	2	0	1
	135	137.5	FR	13255	96	0	0	0	13517	98	0	0	0	12500	91	0	0	0
			2	12513	91	1	0	1	12760	93	1	0	1	11799	86	1	0	1
			3	12232	89	1	0	1	12474	91	1	0	1	11535	84	1	0	1
			4F	12593	92	0	0	1	12841	93	0	0	1	11875	86	0	0	1
			4W	12041	88	1	0	1	12279	89	1	0	1	11355	83	1	0	1
			5QM	13140	96	2	0	0	13399	97	2	0	0	12391	90	2	0	0
			5QN	13268	97	2	0	0	13531	98	2	0	0	12512	91	2	0	0
			5QW	12041	88	3	0	2	12279	89	3	0	2	11355	83	3	0	2
			5RW	12179	89	2	0	2	12420	90	2	0	2	11485	84	2	0	2
			5W	12401	90	2	0	1	12646	92	2	0	1	11695	85	2	0	1
			TCR	13051	95	0	0	0	13308	97	0	0	0	12307	90	0	0	0

DELIVERED LUMENS CHART CONTINUED ONTO NEXT PAGE

Notes:

1 Lumen values are from photometric tests performed in accordance with IESNA LM-79-08. Data is considered to be representative of the configurations shown. Actual performance may differ as a result of end-user environment and application.

* Available in the 26" Urban only

© 2024 Current Lighting Solutions, LLC. All rights reserved. Information and specifications subject to change without notice. All values are design or typical values when measured under laboratory conditions.

BEACON
design . performance . technology

URBAN SERIES
URBAN LUMINAIRE

DELIVERED LUMENS (CONTINUED)

				5K7 (5000K nominal, 70 CRI)					4K7 (4000K nominal, 70 CRI)					3K7 (3000K nominal, 70 CRI)				
# of LEDs	NOMINAL WATTAGE (W)	SYSTEM WATTS (W)	DISTRIBUTION TYPE	LUMENS	LPW	B	U	G	LUMENS	LPW	B	U	G	LUMENS	LPW	B	U	G
36	155	150.6	FR	13992	93	0	0	0	14268	95	0	0	0	13194	88	0	0	0
			2	13208	88	1	0	1	13469	89	1	0	1	12455	83	1	0	1
			3	12912	86	1	0	1	13167	87	1	0	1	12176	81	1	0	1
			4F	13293	88	0	0	1	13555	90	0	0	1	12535	83	0	0	1
			4W	12711	84	1	0	1	12962	86	1	0	1	11986	80	1	0	1
			5QM	13870	92	2	0	0	14144	94	2	0	0	13079	87	2	0	0
			5QN	14006	93	2	0	0	14283	95	2	0	0	13208	88	2	0	0
			5QW	12711	84	3	0	2	12962	86	3	0	2	11986	80	3	0	2
			5RW	12856	85	2	0	2	13110	87	2	0	2	12123	80	2	0	2
			5W	13091	87	2	0	1	13349	89	2	0	1	12345	82	2	0	1
	175	167.3	FR	14784	88	0	0	0	15076	90	0	0	0	13942	83	0	0	0
			2	13956	83	1	0	1	14232	85	1	0	1	13161	79	1	0	1
			3	13644	82	1	0	1	13913	83	1	0	1	12866	77	1	0	1
			4F	14045	84	0	0	1	14323	86	0	0	1	13245	79	0	0	1
			4W	13430	80	1	0	1	13696	82	1	0	1	12665	76	1	0	1
			5QM	14655	88	2	0	0	14945	89	2	0	0	13820	83	2	0	0
			5QN	14799	88	2	0	0	15091	90	2	0	0	13956	83	2	0	0
			5QW	13430	80	3	0	2	13696	82	3	0	2	12665	76	3	0	2
			5RW	13584	81	2	0	2	13852	83	2	0	2	12810	77	2	0	2
			5W	13832	83	2	0	1	14105	84	2	0	1	13044	78	2	0	1

Notes:

1 Lumen values are from photometric tests performed in accordance with IESNA LM-79-08. Data is considered to be representative of the configurations shown. Actual performance may differ as a result of end-user environment and application.

* Available in the 26" Urban only

ELECTRICAL DATA

# LED's	Nominal Wattage (W)	Input Voltage (Volts)	Oper. Current (Amps)	System Power (W)
18	25	120	0.23	27.8
		277	0.10	
		347	0.08	
		480	0.06	
	39	120	0.38	45.1
		277	0.16	
		347	0.13	
		480	0.09	
	50	120	0.48	57.7
		277	0.21	
		347	0.17	
		480	0.12	
	70	120	0.52	62.4
		277	0.23	
		347	0.18	
		480	0.13	
	90	120	0.69	82.3
		277	0.30	
		347	0.24	
		480	0.17	
	110	120	0.82	98.7
		277	0.36	
		347	0.28	
		480	0.21	

# LED's	Nominal Wattage (W)	Input Voltage (Volts)	Oper. Current (Amps)	System Power (W)
36	120	120	1.04	124.9
		277	0.45	
		347	0.36	
		480	0.26	
	135	120	1.15	137.5
		277	0.50	
		347	0.40	
		480	0.29	
	155	120	1.26	150.6
		277	0.54	
		347	0.43	
		480	0.31	
	175	120	1.39	167.3
		277	0.60	
		347	0.48	
		480	0.35	

© 2024 Current Lighting Solutions, LLC. All rights reserved. Information and specifications subject to change without notice. All values are design or typical values when measured under laboratory conditions.

BEACON
design . performance . technology

URBAN SERIES

URBAN LUMINAIRE

PROJECTED LUMEN MAINTENANCE

Ambient Temperature	OPERATING HOURS					
	0	25,000	*TM-21-11 36,000	50,000	100,000	L70 (Hours)
25°C / 77°F	1.00	0.97	0.96	0.95	0.91	408,000
40°C / 104°F	0.99	0.96	0.95	0.94	0.89	356,000

Notes:

* Projected per IESNA TM-21-11. Data references the extrapolated performance projections for thebase model in a 40°C ambient, based on 10,000 hours of LED testing per IESNA LM-80-08.

LUMINAIRE AMBIENT TEMPERATURE FACTOR (LATF)

Ambient Temperature		Lumen Multiplier
0°C	32°F	1.03
10°C	50°F	1.01
20°C	68°F	1.00
25°C	77°F	1.00
30°C	86°F	0.99
40°C	104°F	0.98
50°C	122°F	0.97

Use these factors to determine relative lumen output for average ambient temperatures from 0-40°C (32-104°F).

EPA

EPA: X.XX sqft		PM	SM	YM
CAP	21	1.04	1.14	1.39
	26	1.39	1.49	1.79
MAR	21	1.00	1.10	1.35
	26	1.25	1.35	1.65
MRDS	21	1.00	1.10	1.35
	26	1.25	1.35	1.65
MRSS	26	1.17	1.27	1.57

FOR ALL CONFIGURATIONS LINE DRAWINGS PLEASE SEE:

URB-HD-P.PDF
URB-HD-S.PDF
URB-HD-YM.PDF

© 2024 Current Lighting Solutions, LLC. All rights reserved. Information and specifications subject to change without notice. All values are design or typical values when measured under laboratory conditions.

BEACON
design . performance . technology

DATE: LOCATION:

TYPE: PROJECT:

CATALOG #:

RSA-B-KENS Series Poles

ROUND STRAIGHT ALUMINUM

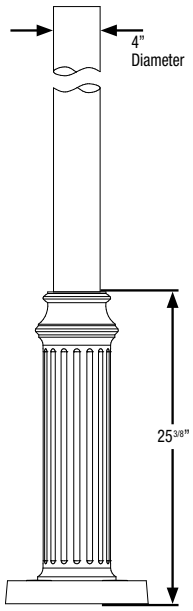

APPLICATIONS

- Lighting installations for side and top mounting of luminaires with effective projected area (EPA) not exceeding maximum allowable loading of the specified pole in its installed geographic location

CONSTRUCTION

- SHAFT: One-piece straight aluminum with fluted or smooth cross section; Extruded shafts of 6061-T6 aluminum in 1/8", 3/16", or 1/4" thickness. Decorative base of 356 cast aluminum.
- POLE CAP OR FINALS: Cap or decorative finials available for side mounted luminaires. Open top or tenons provided for post top mounted luminaires.
- HAND HOLE: Hand hole provided in cast base; Mounting provisions for grounding lug located behind cover
- ANCHOR BOLTS: Four galvanized anchor bolts provided per pole with minimum yield of 55,000 psi (ASTM F1554). Galvanized hardware with two washers and two nuts per bolt for leveling

FINISH

- Durable thermoset polyester powder coat paint finish with nominal 3.0 mil thickness
- Powder paint finish coat available in twelve standard colors; Custom colors available; RAL number preferable.

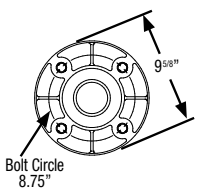

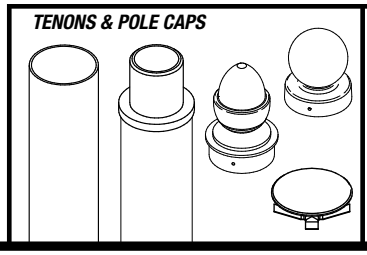

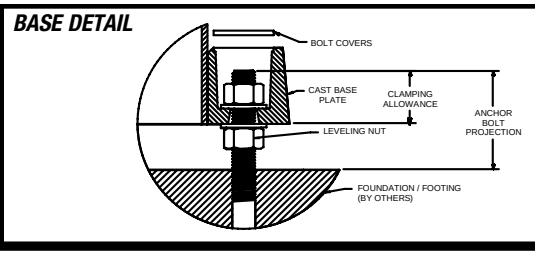

ORDERING EXAMPLE:

RSA-B-KENS - S/F - 16 - 40 - A/B/C - 2L - B3 - DBT - VM2

SERIES	STYLE	HEIGHT	SHAFT	THICKNESS
RSA-B-KENS Round Straight Aluminum Pole Beacon	**S** Smooth **F** Fluted	Reference page 2 Ordering matrix **12'**	Reference page 2 Ordering matrix **40**	Reference page 2 Ordering matrix **B**

MOUNTING	
1	Single arm mount
2	Two fixtures at 180˚
2L	Two fixtures at 90˚
3T	Three fixtures at 90˚
3Y	Three at 120˚
4	Four fixtures at 90˚
OT	Open top (includes pole cap)
TN3	Tenon 3 x 3
TN4	Tenon 3 x 4
CAP	Cap
ARC	Acorn Finial
BAL	Ball Finial

FINISH	
BLT	Black Matte Textured
BLS	Black Gloss Smooth
DBT	Dark Bronze Matte Textured
DBS	Dark Bronze Gloss Smooth
GTT	Graphite Matte Textured
LGS	Light Grey Gloss Smooth
PSS	Platinum Silver Smooth
WHT	White Matte Textured
WHS	White Gloss Smooth
VGT	Verde Green Textured

Color Option

CC	Custom Color

OPTIONS	
GFI'	20 Amp GFCI Receptacle and Cover
EHH'	Extra Handhole
C05'	.5" Coupling
C07'	.75" Coupling
C20'	2" Coupling
VM2	2nd mode vibration damper
LAB	Less Anchor Bolts

DRILL PATTERN

B1	Cruzer, "AM" arm
B3	2 bolt (2-½" spacing), Viper "A" arm
S2	2 bolt (3-½" spacing), Viper "AD" arm

MOUNTING ORIENTATION

Denotes handhole location

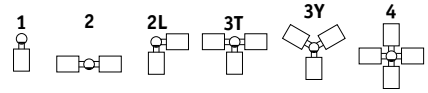

1 Specify option location using logic found on page 2 **(Option Orientation)**

ACCESSORIES- Order Separately

Catalog Number	Description
VM2SXX	2nd mode vibration damper

© 2023 HLI Solutions, Inc. All rights reserved. Information and specifications subject to change without notice. All values are design or typical values when measured under laboratory conditions.

BEACON
design . performance . technology

DATE: LOCATION:

TYPE: PROJECT:

CATALOG #:

RSA-B-KENS Series Poles

ROUND STRAIGHT ALUMINUM

ORDERING INFORMATION Cont.

Catalog Number	Height		Nominal Shaft Dimensions	Wall Thickness	Bolt Circle (suggested)	Bolt Square	Base Plate Size	Anchor Bolt Size	Bolt Projection	Pole weight (lbs)
	Feet	Meters								
RSA-B-KENS-S-10-40-A	10	3.0	4" Round	0.125"	8-3/4"	6.19"	11-5/8" x 25-3/8" Tall	3/4 x 30 x 3	2-3/4"	39
RSA-B-KENS-S-12-40-A	12	3.7	4" Round	0.125"	8-3/4"	6.19"	11-5/8" x 25-3/8" Tall	3/4 x 30 x 3	2-3/4"	43
RSA-B-KENS-S-14-40-A	14	4.3	4" Round	0.125"	8-3/4"	6.19"	11-5/8" x 25-3/8" Tall	3/4 x 30 x 3	2-3/4"	46
RSA-B-KENS-S-16-40-A	16	4.9	4" Round	0.125"	8-3/4"	6.19"	11-5/8" x 25-3/8" Tall	3/4 x 30 x 3	2-3/4"	50
RSA-B-KENS-S-18-40-A	18	5.5	4" Round	0.125"	8-3/4"	6.19"	11-5/8" x 25-3/8" Tall	3/4 x 30 x 3	2-3/4"	53
RSA-B-KENS-S-20-40-A	20	6.1	4" Round	0.125"	8-3/4"	6.19"	11-5/8" x 25-3/8" Tall	3/4 x 30 x 3	2-3/4"	57
RSA-B-KENS-S-10-40-B	10	3.0	4" Round	0.188"	8-3/4"	6.19"	11-5/8" x 25-3/8" Tall	3/4 x 30 x 3	2-3/4"	47
RSA-B-KENS-S-12-40-B	12	3.7	4" Round	0.188"	8-3/4"	6.19"	11-5/8" x 25-3/8" Tall	3/4 x 30 x 3	2-3/4"	53
RSA-B-KENS-S-14-40-B	14	4.3	4" Round	0.188"	8-3/4"	6.19"	11-5/8" x 25-3/8" Tall	3/4 x 30 x 3	2-3/4"	58
RSA-B-KENS-S-16-40-B	16	4.9	4" Round	0.188"	8-3/4"	6.19"	11-5/8" x 25-3/8" Tall	3/4 x 30 x 3	2-3/4"	63
RSA-B-KENS-S-18-40-B	18	5.5	4" Round	0.188"	8-3/4"	6.19"	11-5/8" x 25-3/8" Tall	3/4 x 30 x 3	2-3/4"	69
RSA-B-KENS-S-20-40-B	20	6.1	4" Round	0.188"	8-3/4"	6.19"	11-5/8" x 25-3/8" Tall	3/4 x 30 x 3	2-3/4"	74
RSA-B-KENS-S-22-40-B	22	6.7	4" Round	0.188"	8-3/4"	6.19"	11-5/8" x 25-3/8" Tall	3/4 x 30 x 3	2-3/4"	79
RSA-B-KENS-S-24-40-B	24	7.3	4" Round	0.188"	8-3/4"	6.19"	11-5/8" x 25-3/8" Tall	3/4 x 30 x 3	2-3/4"	84
RSA-B-KENS-S-10-40-C	10	3.0	4" Round	0.25"	8-3/4"	6.19"	11-5/8" x 25-3/8" Tall	3/4 x 30 x 3	2-3/4"	56
RSA-B-KENS-S-12-40-C	12	3.7	4" Round	0.25"	8-3/4"	6.19"	11-5/8" x 25-3/8" Tall	3/4 x 30 x 3	2-3/4"	62
RSA-B-KENS-S-14-40-C	14	4.3	4" Round	0.25"	8-3/4"	6.19"	11-5/8" x 25-3/8" Tall	3/4 x 30 x 3	2-3/4"	69
RSA-B-KENS-S-16-40-C	16	4.9	4" Round	0.25"	8-3/4"	6.19"	11-5/8" x 25-3/8" Tall	3/4 x 30 x 3	2-3/4"	76
RSA-B-KENS-S-18-40-C	18	5.5	4" Round	0.25"	8-3/4"	6.19"	11-5/8" x 25-3/8" Tall	3/4 x 30 x 3	2-3/4"	83
RSA-B-KENS-S-20-40-C	20	6.1	4" Round	0.25"	8-3/4"	6.19"	11-5/8" x 25-3/8" Tall	3/4 x 30 x 3	2-3/4"	90
RSA-B-KENS-S-22-40-C	22	6.7	4" Round	0.25"	8-3/4"	6.19"	11-5/8" x 25-3/8" Tall	3/4 x 30 x 3	2-3/4"	97
RSA-B-KENS-S-24-40-C	24	7.3	4" Round	0.25"	8-3/4"	6.19"	11-5/8" x 25-3/8" Tall	3/4 x 30 x 3	2-3/4"	104
RSA-B-KENS-F-10-40-B	10	3.0	4" Fluted	0.188"	8-3/4"	6.19"	11-5/8" x 25-3/8" Tall	3/4 x 30 x 3	2-3/4"	50
RSA-B-KENS-F-12-40-B	12	3.7	4" Fluted	0.188"	8-3/4"	6.19"	11-5/8" x 25-3/8" Tall	3/4 x 30 x 3	2-3/4"	55
RSA-B-KENS-F-14-40-B	14	4.3	4" Fluted	0.188"	8-3/4"	6.19"	11-5/8" x 25-3/8" Tall	3/4 x 30 x 3	2-3/4"	61
RSA-B-KENS-F-16-40-B	16	4.9	4" Fluted	0.188"	8-3/4"	6.19"	11-5/8" x 25-3/8" Tall	3/4 x 30 x 3	2-3/4"	67
RSA-B-KENS-F-18-40-B	18	5.5	4" Fluted	0.188"	8-3/4"	6.19"	11-5/8" x 25-3/8" Tall	3/4 x 30 x 3	2-3/4"	72
RSA-B-KENS-F-20-40-B	20	6.1	4" Fluted	0.188"	8-3/4"	6.19"	11-5/8" x 25-3/8" Tall	3/4 x 30 x 3	2-3/4"	78
RSA-B-KENS-F-22-40-B	22	6.7	4" Fluted	0.188"	8-3/4"	6.19"	11-5/8" x 25-3/8" Tall	3/4 x 30 x 3	2-3/4"	84
RSA-B-KENS-F-24-40-B	24	7.3	4" Fluted	0.188"	8-3/4"	6.19"	11-5/8" x 25-3/8" Tall	3/4 x 30 x 3	2-3/4"	90

NOTE Factory supplied template must be used when setting anchor bolts. Current will deny any claim for incorrect anchorage placement resulting from failure to use factory supplied template and anchor bolts.

EHH - EXTRA HANDHOLE

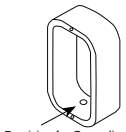

C05 - C07 - C20 - COUPLING

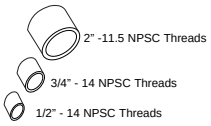

VM2 - VIBRATION DAMPER 2ND MODE

Factory installed, internal damper designed to alter pole resonance to reduce movement and material fatigue caused by 2nd mode vibration.



GFI – 20 AMP GFCI RECEPTACLE & COVER

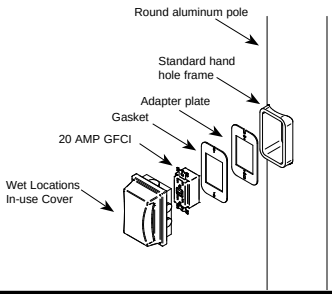

OPTION ORIENTATION

Follow the logic below when ordering location specific options. For each option, include its orientation (in degrees) and its height (in feet). Example: Option C07 should be ordered as: **RSA-B-KENS-F16-40B-TN3-DBT-C05-0-5** (.5" coupling on the handhole/arm side of pole, 15 feet up from the pole base) 1' spacing required between option. Consult factory for other configurations.

VM2SXX - VIBRATION DAMPER 2ND MODE

Field installed, internal damper designed to alter pole resonance to reduce movement and material fatigue caused by 2nd mode vibration.



VM2S08 – 8'
VM2S12 – 12'
VM2S16 – 16'
VM2S20 – 20'
VM2S24 – 24'

For more information about pole vibration and vibration dampers, please consult Pole Vibration Application Guide.
Due to our continued efforts to improve our products, product specifications are subject to change without notice.

© 2023 HLI Solutions, Inc. All rights reserved. Information and specifications subject to change without notice. All values are design or typical values when measured under laboratory conditions.

BEACON
design . performance . technology

DATE: LOCATION:

TYPE: PROJECT:

CATALOG #:

RSA-B-KENS Series Poles

ROUND STRAIGHT ALUMINUM

ASCE7-05 WIND MAP

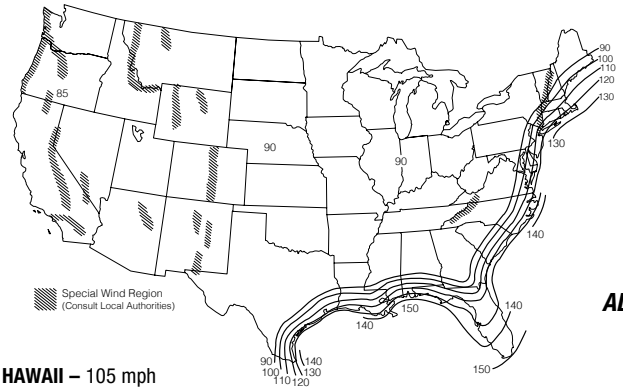

HAWAII – 105 mph

PUERTO RICO – 145 mph

***PRINTED WITH PERMISSION FROM ASCE**

FLORIDA REGION WIND MAP

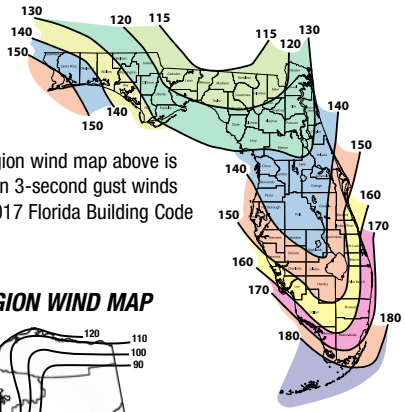

Florida region wind map above is based upon 3-second gust winds and the 2017 Florida Building Code

ALASKA REGION WIND MAP

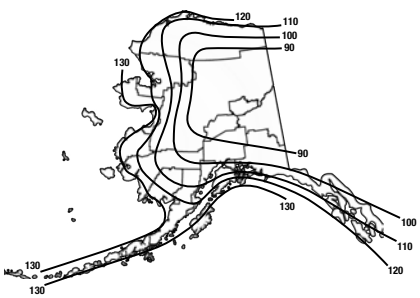

ASCE 7-05 wind map EPA Load Rating - 3 second gust wind speeds										
Catalog Number	**85**	**90**	**100**	**105**	**110**	**120**	**130**	**140**	**145**	**150**
RSA-B-KENS-S-10-40-A	12.2	10.8	8.7	7.8	7.0	5.8	4.9	4.2	3.9	3.6
RSA-B-KENS-S-12-40-A	9.0	7.9	6.2	5.5	4.9	3.9	3.3	2.8	2.6	2.4
RSA-B-KENS-S-14-40-A	6.8	5.9	4.5	3.9	3.4	2.6	2.2	1.8	1.6	1.5
RSA-B-KENS-S-16-40-A	5.1	4.4	3.2	2.7	2.3	1.6	1.3	1.0	0.9	0.8
RSA-B-KENS-S-18-40-A	3.8	3.1	2.1	1.7	1.3	0.8	0.5	NR	NR	NR
RSA-B-KENS-S-20-40-A	2.6	2.1	1.2	0.8	0.5	NR	NR	NR	NR	NR
RSA-B-KENS-S-10-40-B	18.0	16.1	13.0	11.8	10.6	8.9	7.5	6.5	6.0	5.6
RSA-B-KENS-S-12-40-B	13.6	12.1	9.7	8.7	7.8	6.4	5.4	4.6	4.3	4.0
RSA-B-KENS-S-14-40-B	10.6	9.3	7.3	6.5	5.8	4.7	3.9	3.3	3.0	2.8
RSA-B-KENS-S-16-40-B	8.3	7.3	5.6	4.9	4.3	3.3	2.7	2.3	2.1	1.9
RSA-B-KENS-S-18-40-B	6.5	5.6	4.1	3.5	3.0	2.2	1.8	1.4	1.3	1.2
RSA-B-KENS-S-20-40-B	5.0	4.2	2.9	2.4	2.0	1.3	1.0	0.7	0.6	0.5
RSA-B-KENS-S-22-40-B	3.7	3.0	1.9	1.5	1.1	0.5	NR	NR	NR	NR
RSA-B-KENS-S-24-40-B	2.7	2.1	1.1	0.7	NR	NR	NR	NR	NR	NR
RSA-B-KENS-S-10-40-C	23.3	20.8	16.9	15.3	13.9	11.6	9.9	8.5	7.9	7.4
RSA-B-KENS-S-12-40-C	17.7	15.8	12.7	11.5	10.4	8.6	7.3	6.2	5.8	5.4
RSA-B-KENS-S-14-40-C	14.0	12.4	9.8	8.8	7.9	6.5	5.4	4.6	4.3	4.0
RSA-B-KENS-S-16-40-C	11.2	9.9	7.7	6.8	6.1	4.8	4.1	3.4	3.1	2.9
RSA-B-KENS-S-18-40-C	8.9	7.8	5.9	5.2	4.5	3.5	2.9	2.4	2.2	2.0
RSA-B-KENS-S-20-40-C	7.0	6.1	4.5	3.8	3.3	2.4	1.9	1.5	1.4	1.2
RSA-B-KENS-S-22-40-C	5.5	4.7	3.3	2.7	2.2	1.5	1.1	0.8	0.7	0.6
RSA-B-KENS-S-24-40-C	4.3	3.5	2.3	1.8	1.3	0.7	NR	NR	NR	NR
RSA-B-KENS-F-10-40-B	17.9	16.0	12.9	11.6	10.5	8.7	7.2	6.1	5.6	5.1
RSA-B-KENS-F-12-40-B	13.5	12.0	9.5	8.5	7.6	6.2	5.0	4.1	3.7	3.3
RSA-B-KENS-F-14-40-B	10.4	9.2	7.2	6.3	5.6	4.4	3.5	2.7	2.4	2.1
RSA-B-KENS-F-16-40-B	8.1	7.1	5.4	4.7	4.1	3.0	2.2	1.6	1.3	1.0
RSA-B-KENS-F-18-40-B	6.3	5.4	3.9	3.3	2.8	1.9	1.2	0.6	NR	NR
RSA-B-KENS-F-20-40-B	4.7	3.9	2.7	2.2	1.7	0.9	NR	NR	NR	NR
RSA-B-KENS-F-22-40-B	3.4	2.8	1.6	1.2	0.8	NR	NR	NR	NR	NR
RSA-B-KENS-F-24-40-B	2.4	1.8	0.8	NR	NR	NR	NR	NR	NR	NR

Florida Building Code 2017 EPA Load Rating - 3 second gust wind speeds								
Catalog Number	**115**	**120**	**130**	**140**	**150**	**160**	**170**	**180**
RSA-10-40-A-S-KENS	9.0	8.2	6.9	5.8	4.9	4.1	3.8	3.6
RSA-12-40-A-S-KENS	6.5	5.8	4.8	3.9	3.2	2.6	2.5	2.4
RSA-14-40-A-S-KENS	4.7	4.1	3.2	2.5	1.9	1.4	1.2	1.1
RSA-16-40-A-S-KENS	3.2	2.8	2.0	1.4	0.9	0.5	NR	NR
RSA-18-40-A-S-KENS	2.1	1.7	1.0	0.5	NR	NR	NR	NR
RSA-20-40-A-S-KENS	1.1	0.8	NR	NR	NR	NR	NR	NR
RSA-10-40-B-S-KENS	13.6	12.4	10.5	8.9	7.6	6.6	6.3	5.5
RSA-12-40-B-S-KENS	10.1	9.2	7.6	6.4	5.4	4.5	4.3	4.0
RSA-14-40-B-S-KENS	7.6	6.9	5.6	4.6	3.7	3.0	2.9	2.7
RSA-16-40-B-S-KENS	5.7	5.1	4.0	3.2	2.4	1.8	1.6	1.4
RSA-18-40-B-S-KENS	4.2	3.6	2.7	2.0	1.4	0.8	0.6	NR
RSA-20-40-B-S-KENS	2.9	2.4	1.6	1.0	0.5	NR	NR	NR
RSA-22-40-B-S-KENS	1.9	1.4	0.7	NR	NR	NR	NR	NR
RSA-24-40-B-S-KENS	0.9	0.6	NR	NR	NR	NR	NR	NR
RSA-10-40-C-S-KENS	17.6	16.2	13.7	11.7	10.1	8.8	8.2	7.3
RSA-12-40-C-S-KENS	13.3	12.1	10.2	8.6	7.3	6.2	5.8	5.4
RSA-14-40-C-S-KENS	10.3	9.3	7.7	6.4	5.3	4.5	4.3	4.0
RSA-16-40-C-S-KENS	7.9	7.1	5.8	4.7	3.8	3.0	2.7	2.5
RSA-18-40-C-S-KENS	6.0	5.4	4.2	3.3	2.5	1.9	1.7	1.5
RSA-20-40-C-S-KENS	4.5	3.9	2.9	2.1	1.4	0.9	0.7	0.5
RSA-22-40-C-S-KENS	3.2	2.7	1.9	1.1	0.5	NR	NR	NR
RSA-24-40-C-S-KENS	2.2	1.7	0.9	NR	NR	NR	NR	NR
RSA-10-40-B-F-KENS	13.6	12.4	10.5	8.9	7.6	6.6	5.7	4.9
RSA-12-40-B-F-KENS	10.1	9.2	7.6	6.4	5.4	4.5	3.8	3.2
RSA-14-40-B-F-KENS	7.6	6.9	5.6	4.6	3.7	3.0	2.4	1.9
RSA-16-40-B-F-KENS	5.7	5.1	4.0	3.2	2.4	1.8	1.3	0.9
RSA-18-40-B-F-KENS	4.2	3.6	2.7	2.0	1.4	0.8	NR	NR
RSA-20-40-B-F-KENS	2.9	2.4	1.6	1.0	0.5	NR	NR	NR
RSA-22-40-B-F-KENS	1.9	1.4	0.7	NR	NR	NR	NR	NR
RSA-24-40-B-F-KENS	0.9	0.6	NR	NR	NR	NR	NR	NR

© 2023 HLI Solutions, Inc. All rights reserved. Information and specifications subject to change without notice. All values are design or typical values when measured under laboratory conditions.

BEACON
design . performance . technology

DATE: LOCATION:

TYPE: PROJECT:

CATALOG #:

RSA-B-KENS Series Poles

ROUND STRAIGHT ALUMINUM

NOTES

Wind-speed Website disclaimer:
Current has no connection to the linked website and makes no representations as to its accuracy. While the information presented on this third-party website provides a useful starting point for analyzing wind conditions, Current has not verified any of the information on this third party website and assumes no responsibility or liability for its accuracy. The material presented in the windspeed website should not be used or relied upon for any specific application without competent examination and verification of its accuracy, suitability and applicability by engineers or other licensed professionals. Current does not intend that the use of this information replace the sound judgment of such competent professionals, having experience and knowledge in the field of practice, nor to substitute for the standard of care required of such professionals in interpreting and applying the results of the windspeed report provided by this website. Users of the information from this third party website assume all liability arising from such use. Use of the output of these referenced websites do not imply approval by the governing building code bodies responsible for building code approval and interpretation for the building site described by latitude/longitude location in the windspeed report. http://windspeed.atcouncil.org

- Allowable EPA, to determine max pole loading weight, multiply allowable EPA by 30 lbs.
- The tables for allowable pole EPA are based on the ASCE 7-05 Wind Map or the Florida Region Wind Map for the 2010 Florida Building Code. The Wind Maps are intended only as a general guide and cannot be used in conjunction with other maps. Always consult local authorities to determine maximum wind velocities, gusting and unique wind conditions for each specific application
- Allowable pole EPA for jobsite wind conditions must be equal to or greater than the total EPA for fixtures, arms, and accessories to be assembled to the pole. Responsibility lies with the specifier for correct pole selection. Installation of poles without luminaires or attachment of any unauthorized accessories to poles is discouraged and shall void the manufacturer's warranty
- Wind speeds and listed EPAs are for ground mounted installations. Poles mounted on structures (such as bridges and buildings) must consider vibration and coefficient of height factors beyond this general guide; Consult local and federal standards
- Wind Induced Vibration brought on by steady, unidirectional winds and other unpredictable aerodynamic forces are not included in wind velocity ratings. Consult Pole Vibration Application Guide for environmental risk factors and design considerations.
- Extreme Wind Events like, Hurricanes, Typhoons, Cyclones, or Tornadoes may expose poles to flying debris, wind shear or other detrimental effects not included in wind velocity ratings

Due to our continued efforts to improve our products, product specifications are subject to change without notice.

© 2023 HLI Solutions, Inc. All rights reserved. Information and specifications subject to change without notice. All values are design or typical values when measured under laboratory conditions.

BEACON
design . performance . technology

AA-37 Nautilus

ARMS

DATE: LOCATION:

TYPE: PROJECT:

CATALOG #:

Sample	*AA-37*	*S*	*4*	*B*	*P*	*BBT*
Ordering		/	/	/	/	/
	A	**B**	**C**	**D**	**E**	**F**

DETAILS

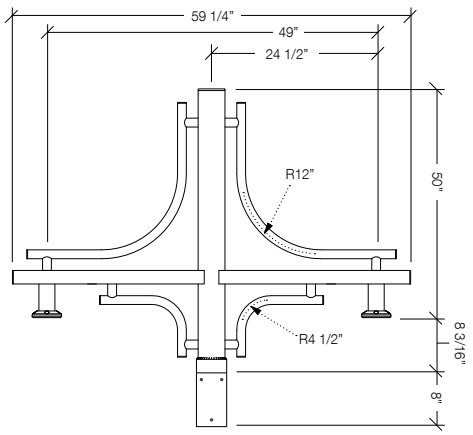

WALL BRACKET DETAILS

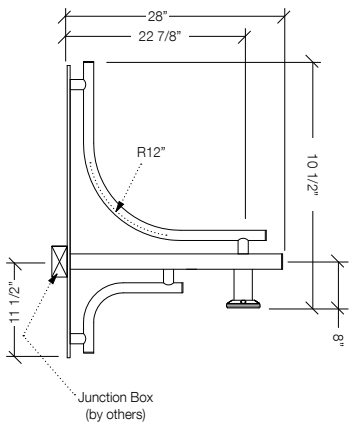

WALL PLATE DETAILS

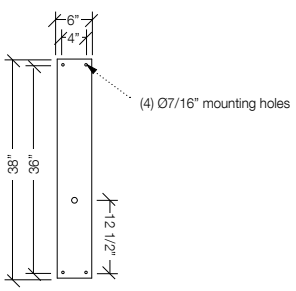

A. MODEL

AA-37	Nautilus

B. POST SHAFT PROFILE

W	wall mount
S	smooth
F	fluted

C. POST SHAFT DIAMETER

4	4"
5	5"
6	6"
OTHER	_____

D. ARRANGEMENT

B *see arrangement table below*

E. LUMINAIRE MOUNTING

P pendant

F. COLOR

BLS - Black Gloss Smooth

BBT	basic black textured
BMT	black matte textured
WHT	white textured
MBT	metallic bronze textured
BZT	bronze textured
DBT	dark bronze textured
GYS	gray smooth
DPS	dark platinum smooth
GNT	green textured
MST	metallic silver textured
MTT	metallic titanium textured
OWI	old world iron
RAL	_____

Construction: All cast aluminum parts shall be low copper alloy A356. All extruded aluminum parts shall be alloy 6061-T6, 6063-T5 or equal.

EPA (effective projected area): EPA is de¬fined as (projected surface area X drag factor) and measured in ft2. Allowable post, luminaire arm, luminaire and accessory EPAs are derived from the most current published AASHTO (American Association of State Highway and Transportation Officials) standard, currently AASHTO 2001 (50yr design life). Customer assumes all responsibility for selecting the ap¬propriate post for installation (consult factory for assistance). Luminaire arm, luminaire and accessory EPA must be equal to or less than allowable EPA of post. Consult a professional engineer for compliance with local codes and standards.

Fasteners: All fasteners shall be Corrosion Resistant. When tamper resistant fasteners are required, spanner HD (snake eye) style shall be provided (special tool required, available at additional cost).

Finish: Finish shall be a Beacote V polyester powder-coat electro-statically applied and thermocured. Beacote V finish shall consist of a five stage iron phosphate chemical pretreatment regimen with a polymer primer sealer, oven dry off, and top coated with a thermoset super TGIC polyester pow¬der coat finish. The finish shall meet the AAMA 605.2 performance specification which includes passing a 3000 hour salt spray test for corrosion resistance and resists cracking or loss of adhesion per ASTM D522 and resists surface impacts of up to 160 inch-pound.

Limited Warranty: Beacon Products warrants its products, to the original purchaser, against defects in materials and workmanship for proper usage for a period of 5 years after date of production, when properly installed, maintained and appropriately specified. See Warranty Information on www.beaconproducts.com for complete details and exclusions.

2CC - 2" Cast Coupling

		arrangement (EPA index ft² / weight (lbs))									
shaft Ø		A	B	C	D	E	F	G	H	I	J
wall	weight	18	-	-	-	-	-	-	-	-	-
Ø4"	EPA	-	3.37	5.04	5.04	-	5.19	5.19	-	-	-
	weight	-	26	36	38	-	46	48	-	-	-
Ø5"	EPA	-	3.80	5.47	5.47	4.49	5.62	5.62	6.07	6.85	6.85
	weight	-	30	40	42	40	50	52	50	60	62
Ø6"	EPA	-	4.22	5.89	5.89	4.91	6.04	6.04	6.49	7.27	7.27
	weight	-	34	44	46	44	54	56	54	64	66

© 2022 HLI Solutions, Inc. All rights reserved. Information and specifications subject to change without notice. All values are design or typical values when measured under laboratory conditions.

Submitted by Swaney Lighting	Catalog Number: AA-00--18/4"MTC/BLS Notes:	Type: A SLA24-58713

BEACON
design . performance . technology

Banner Arms

ARMS

DATE:	LOCATION:
TYPE:	PROJECT:
CATALOG #:	

Banner Arm Mounting Styles

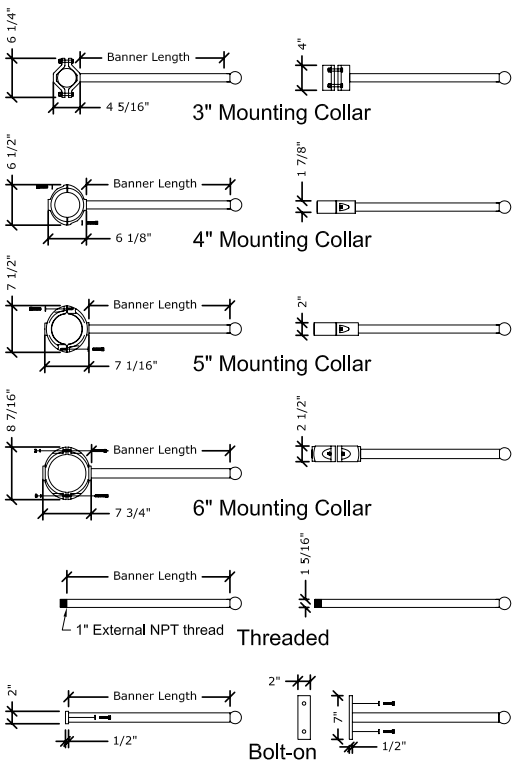

Specifications

Construction:
All cast aluminum parts shall low copper alloy A356. All extruded aluminum parts shall be alloy 6061-T6, 6063-T5 or equal.

Fasteners:
All fasteners shall be stainless steel. When tamper resistant fasteners are required, spanner HD (snake eye) style shall be provided (special tool required, available at additional cost), consult factory for availability.

Finish:
Finish shall be Beacote III polyester powdercoat electrostatically applied and thermocured. Poles shall be subjected to chemical pre-treatment prior to painting by immersion process.

Options

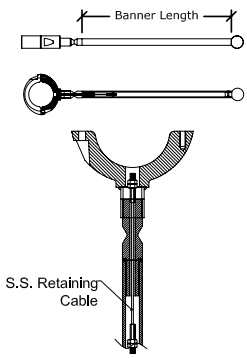

Breakaway Coupler System

breakaway speed varies with banner size (consult factory)

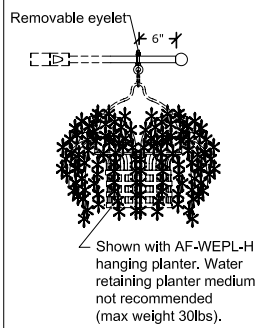

Planter Eyelet

Ordering Example:
AA-0024 / 4"MTC / BA / BKT

AA-00 __ / _____ / ___ / ___ ____

Length	Mounting	Options	Finish
18 18"	3"MTC mounting collar for 3" shaft	BA breakaway coupler system*	BB black
20 20"	4"MTC mounting collar for 4" shaft	PA removable planter eyelet*	BZ bronze
22 22"	5"MTC mounting collar for 5" shaft	2X two banner arms at 180°	BG green
24 24"	6"MTC mounting collar for 6" shaft		BW white
30 30"	BO bolted connection		BY gray
	TO threaded connection		RAL RAL-
			OTHER

Consult factory for premium and verde finishes. Custom colors available.

BLS - Black Gloss Smooth

Notes:
* Consult factory

© 2022 HLI Solutions, Inc. All rights reserved. Information and specifications subject to change without notice. All values are design or typical values when measured under laboratory conditions.

BEACON
design . performance . technology

Domus
POLES & BASES

DATE: LOCATION:

TYPE: PROJECT:

CATALOG #:

RSAB-BC-60-BLS-DOMU

Sample	*DOMU*		*5*		*BBT*
Ordering		/		/	
	A		**B**		**C**

DETAILS

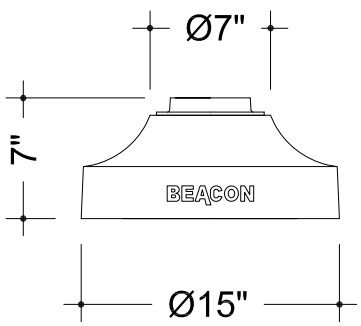

A. MODEL

DOMU	Domus

B. POST SHAFT DIAMETER

3	3"
4	4"
5	5"
6	6"

C. COLOR

BBT	basic black textured
BMT	black matte textured
WHT	white textured
MBT	metallic bronze textured
BZT	bronze textured
DBT	dark bronze textured
GYS	gray smooth
DPS	dark platinum smooth
GNT	green textured
MST	metallic silver textured
MTT	metallic titanium textured
OWI	old world iron
RAL	_____

BLS - Black Gloss Smooth

Construction: All cast aluminum parts shall be low copper alloy A356. All extruded aluminum parts shall be alloy 6061-T6, 6063-T5 or equal. Standard fluted shaft profile shall be 16-flat flutes for 3"OD and 12-flat flutes for 4", 5", & 6"OD.

Base Covers: require specification of smooth or fluted shafts of the size required to meet wind load requirements

Vibration Dampeners: Vibration dampener pads shall be provided when required by customer or deemed necessary by Beacon Products. Please consult factory for bridge mounted applications.

EPA (effective projected area): EPA is defined as (projected surface area X drag factor) and measured in ft2. Allowable post, luminaire arm, luminaire and accessory EPAs are derived from the most current published AASHTO (American Association of State Highway and Transportation Officials) standard, currently AASHTO 2001 (50yr design life). Customer assumes all responsibility for selecting the appropriate post for installation (consult factory for assistance). Luminaire arm, luminaire and accessory EPA must be equal to or less than allowable EPA of post. Consult a professional engineer for compliance with local codes and standards.

Anchor Bolt: Anchor bolts, sized as required, double hex nuts and flat washers shall be hot dipped galvanized steel. A bolt circle template shall be provided for installation.

Fasteners: All fasteners shall be Corrosion Resistant. When tamper resistant fasteners are required, spanner HD (snake eye) style shall be provided (special tool required, available at additional cost).

Finish: Finish shall be a Beacote V polyester powdercoat electrostatically applied and thermocured. Beacote V finish shall consist of a five stage iron phosphate chemical pretreatment regimen with a polymer primer sealer, oven dry off, and top coated with a thermoset super TGIC polyester powder coat finish. The finish shall meet the AAMA 605.2 performance specification which includes passing a 3000 hour salt spray test for corrosion resistance and resists cracking or loss of adhesion per ASTM D522 and resists surface impacts of up to 160 inch-pound.

Limited Warranty: Beacon Products warrants its products, to the original purchaser, against defects in materials and workmanship for proper usage for a period of 5 years after date of production, when properly installed, maintained and appropriately specified.

Due to our continued efforts to improve our products, product specifications are subject to change without notice.

© 2022 HLI Solutions, Inc. All rights reserved. Information and specifications subject to change without notice. All values are design or typical values when measured under laboratory conditions.

Attachment 15
Drawings

UNIVERSITY OF NEW ENGLAND
MARINE SCIENCE CENTER PIER

BIDDEFORD, MAINE

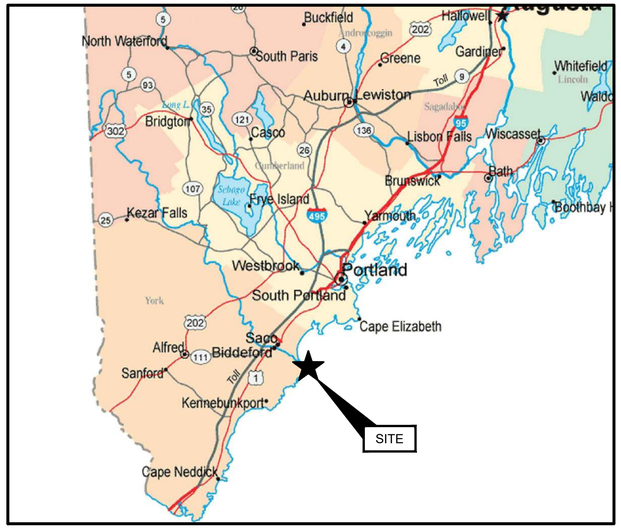

SOURCE:
MAINE ROAD MAP, GOOGLE IMAGES, ACCESSED SEPTEMBER 2023.

STATE MAP
(NOT TO SCALE)

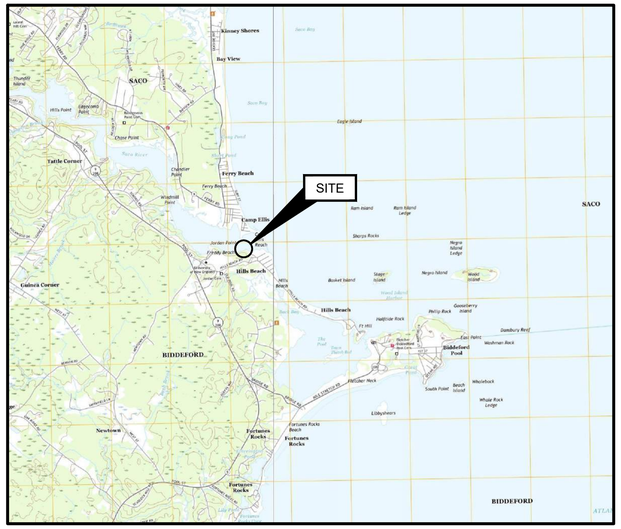

SOURCE:
USGS TOPOGRAPHICAL MAP OF BIDDEFORD, MAINE 2022

SITE LOCATION MAP
(NOT TO SCALE)

PROJECT INFO:

ZONING DISTRICT: INSTITUTIONAL (IN) ZONE WITH LIMITED RESIDENTIAL (LR) SHORELAND OVERLAY
EXISTING AND PROPOSED USE: MARINE RESEARCH CENTER
WATERSHED: SACO RIVER
WITHIN MS4 URBANIZED AREA: YES
WITHIN 100-YEAR FLOOD ZONE: NO
PUBLIC ROAD PROPOSED: NO
PRIVATE ROAD PROPOSED: YES
PUBLIC SEWER CONNECTION: YES, EXISTING
PUBLIC STORM DRAIN CONNECTION: NO

PERVIOUS COVERAGE: EXISTING= 105,843 SF
PROPOSED=95,194 SF

IMPERVIOUS COVERAGE: EXISTING=5,546 SF
PROPOSED=16,195 SF

BUILDING ROOF SQUARE FOOTAGE=751 WITHIN LIMIT OF DISTURBANCE

WAIVERS REQUESTED:
- ARTICLE XI.II. SECTION 5.B.1.A. - SEE COVER LETTER
- ARTICLE XI.II. SECTION 5.B.1.E.3. - SLOPES STEEPER THAN 2:1 IN LEDGE
- ARTICLE VI. SECTION 26.F. - SLOPES STEEPER THAN 3:1 IN CUT/FILL SLOPES
- ARTICLE XIV SECTION 15.H.4 - ROADWAY BANKS STEEPER THAN 2:1

811 DigSafe

THIS DOCUMENT, AND THE IDEAS AND DESIGNS INCORPORATED HEREIN, IS AN INSTRUMENT OF PROFESSIONAL SERVICE, IS THE PROPERTY OF GEI CONSULTANTS AND IS NOT TO BE USED, IN WHOLE OR IN PART, FOR ANY OTHER PROJECT WITHOUT THE WRITTEN AUTHORIZATION OF GEI CONSULTANTS.

PREPARED FOR:

UNIVERSITY OF NEW ENGLAND
11 HILLS BEACH ROAD
BIDDEFORD, MAINE
(207)283-0171

PREPARED BY:

GEI CONSULTANTS, INC.
5 MILK STREET
PORTLAND, ME 04101
(207)797-8901

CITY OF BIDDEFORD PLANNING BOARD
PROJECT NO. 2024.34
GEI PROJECT NO. 2203703

SHEET INDEX

SHEET NO.	DRAWING NO.	TITLE
1	G-001	COVER SHEET
2	G-002	GENERAL NOTES
3	G-003	VICINITY PLAN
4	B-001	BORING LOCATION PLAN
5	B-002	BORING LOGS (1 OF 3)
6	B-003	BORING LOGS (2 OF 3)
7	B-004	BORING LOGS (3 OF 3)
8	B-005	INTERPRETIVE SUBSURFACE PROFILE
9	C-001	EXISTING CONDITIONS PLAN
10	C-002	DEMOLITION AND CONSTRUCTION STAGING
11	C-003	SITE PLAN
12	C-004	GRADING AND DRAINAGE PLAN
13	C-005	EROSION CONTROL PLAN
	ES1.1	ELECTRICAL SITE PLAN
14	C-006	ACCESS ROAD PLAN AND PROFILE STA 1+00 TO MATCHLINE STA 4+00
15	C-007	ACCESS ROAD PLAN AND PROFILE MATCHLINE STA 4+00 TO STA 6+60
16	C-008	ACCESS ROAD TYPICAL SECTION
17	C-009	ACCESS ROAD SECTIONS 2+00 TO 3+75
18	C-010	ACCESS ROAD SECTIONS 4+00 TO 5+75
19	C-011	SITE DETAILS I
20	C-012	EROSION CONTROL NOTES
21	C-013	EROSION CONTROL DETAILS I
22	C-014	EROSION CONTROL DETAILS II
23	C-015	REVEGETATION PLAN
24	C-016	REVEGETATION NOTES, DETAILS AND SCHEDULES
25	S-001	PIER LAYOUT PLAN
26	S-002	PIER PLANS AND ELEVATIONS
27	S-003	TYPICAL PIER SECTIONS (1 OF 2)
28	S-004	TYPICAL PIER SECTIONS (2 OF 2)
29	S-005	PILE PLAN
30	S-006	PRECAST PILE CAP PLAN (1 OF 2)
31	S-007	PRECAST PILE CAP PLAN (1 OF 2)
32	S-008	PRECAST DECK PLANK PLAN
33	S-009	MISCELLANEOUS DETAILS (1 OF 5)
34	S-010	MISCELLANEOUS DETAILS (2 OF 5)
35	S-011	MISCELLANEOUS DETAILS (3 OF 5)
36	S-012	MISCELLANEOUS DETAILS (4 OF 5)
37	S-013	MISCELLANEOUS DETAILS (5 OF 5)
38	S-014	ABUTMENT DETAILS
39	F-001	FLOAT PLAN AND DETAILS

FOR PERMIT

NO.	DATE	ISSUE/REVISION	APP
8	6/5/2025	ADDRESS PB COMMENTS	DJB
7	4/16/2025	BIDDEFORD PERMIT APP.	DJB
6	9/17/2024	REVISED PERMIT SET	DJB
5	6/27/2024	REVISED PERMIT SET	DJB
4	9/14/2023	DEP PERMIT SET	DJB

STATE OF MAINE
BRIAN M. MCDEVITT
PE18260
LICENSED PROFESSIONAL ENGINEER
6/9/2025

DWG. NO.
G-001

SHEET NO.
1 OF 39

COORDINATION OF WORK:

1. THE CONTRACTOR SHALL SCHEDULE ALL ACTIVITIES SO AS TO LIMIT IMPACT TO MARINE AND LANDSIDE USES.
2. WORK SHALL BE COORDINATED WITH THE OWNER AND THEIR REPRESENTATIVES:

UNE:A:A:A:	ANDREW PHILIPPE	207-602-2365 (OFFICE)	207-400-6166 (CELL)
GEI:A:A:B:	DANIEL BANNON	207-347-2372 (OFFICE)	207-671-2583 (CELL)
SDA:A:A:C:	TOM SAUCIER	207-449-4275	

3. WORK IS SUBJECT TO THE FOLLOWING TIME OF YEAR AND TIMING OF ACTIVITY RESTRICTIONS:
   - TO BE DEFINED UPON PERMIT APPROVAL.
4. CONTRACTOR ACCESS TO THE SITE BY WATER SHALL AT NO TIME IMPACT USE OF THE ADJACENT FEDERAL NAVIGATION CHANNEL.
5. THE OWNER WILL PERMIT THE CONTRACTOR TO HAVE A LAYDOWN AREA ON THE UPLAND PROPERTY FOR USE DURING CONSTRUCTION. AN APPROXIMATE LAYDOWN AREA IS SHOWN ON SHEET C-005. THE FINAL LOCATION AND DIMENSIONS OF THE LAYDOWN AREA SHALL BE APPROVED BY THE OWNER.

SITE ENVIRONMENTAL CONTROLS:

1. ALL WORK SHALL BE PERFORMED IN COMPLIANCE WITH CITY, STATE, AND FEDERAL PERMITS. COPIES OF PERMIT APPROVALS ARE PROVIDED IN THE PROJECT MANUAL.

OSHA REQUIREMENTS:

1. PURSUANT TO 26 M.R.S.A. §565, THE CONTRACTOR SHALL ADHERE TO THE OCCUPATIONAL SAFETY AND HEALTH STANDARDS AS PROMULGATED BY THE FEDERAL OCCUPATIONAL SAFETY AND HEALTH ADMINISTRATION (OSHA) AT 29-CFR PART 1926 AS MOST RECENTLY AMENDED.

EROSION CONTROL:

1. EROSION AND SEDIMENTATION CONTROL MEASURES ARE PROPOSED TO CONTROL ACCELERATED EROSION AND SEDIMENTATION AND REDUCE ADVERSE IMPACTS FROM RUNOFF AND EROSION AT THE WORK SITE.
2. APPLICATION OF TEMPORARY AND PERMANENT EROSION CONTROL MEASURES SHALL BE IN ACCORDANCE WITH THE LATEST EDITION OF THE MAINE EROSION AND SEDIMENT CONTROL BMP'S PUBLISHED BY MAINE DEP AND AVAILABLE AT: HTTPS://WWW.MAINE.GOV/DEP/LAND/EROSION/ESCBMPS/
3. THE WORK SHALL BE PERFORMED BY A CONTRACTOR THAT IS CERTIFIED BY MAINE DEP IN EROSION AND SEDIMENT CONTROL MEASURES. A CERTIFIED INDIVIDUAL SHALL BE ONSITE DURING ALL CONSTRUCTION ACTIVITY.
4. EROSION AND SEDIMENTATION DUE TO RUNOFF, TIDAL EXPOSURE, AND WAVE ACTION SHALL BE CONTROLLED BY STAGING CONSTRUCTION ACTIVITY TO MINIMIZE AREA AND TIME OF DISTURBANCE, APPLICATION OF SILT FENCE, BARRIERS, AND OTHER EROSION CONTROL MEASURES, AND PRESERVING NATURAL VEGETATION WHENEVER POSSIBLE.
5. THE CONTRACTOR'S SEQUENCE OF OPERATIONS AND SCHEDULE FOR WORK ACTIVITIES SHALL ACT TO MINIMIZE EXPOSURE TO EROSION.
6. THE CONTRACTOR SHALL TAKE CARE TO LIMIT THE AREA OF SOIL DISTURBANCE TO THE MINIMUM NECESSARY TO COMPLETE THE WORK.
7. EROSION CONTROL MEASURES, SEEDING, AND VEGETATION SHALL BE INSPECTED WEEKLY AND AFTER RAINSTORMS, RUNOFF EVENTS, AND STORM EVENTS UNTIL FINAL ACCEPTANCE. REPAIRS SHALL BE MADE WHEN NO LONGER SERVICEABLE DUE TO DAMAGE OR ACCUMULATION OF SEDIMENT.
8. AT THE COMPLETION OF CONSTRUCTION, ALL DISTURBED AREAS SHALL BE RESTORED TO THEIR ORIGINAL CONDITION AND CONTOUR, UNLESS OTHERWISE INDICATED ON THE PLANS.

SITE PREPARATION:

1. CONTRACTOR SHALL INSTALL ALL SIGNAGE PRIOR TO INITIATION OF CONSTRUCTION ACTIVITIES. INCLUDE OWNER PROJECT SIGNAGE AND FEDERAL AND STATE MANDATED WORK PLACE SIGNAGE.
2. CONTRACTOR SHALL HAVE IN-PLACE TRASH AND SANITARY FACILITIES FOR THE WORK PLACE.
3. DISCOVERY OF INCONSISTENT SITE INFORMATION OR CONDITIONS ARE TO BE IMMEDIATELY CONVEYED TO THE OWNER AND ENGINEER PRIOR TO COMMENCING OR CONTINUING CONSTRUCTION.
4. THE CONTRACTOR SHALL NOTIFY DIG SAFE PRIOR TO COMMENCING ANY WORK.
5. LOCATIONS OF EXISTING UTILITIES SHOWN ARE APPROXIMATE. THE CONTRACTOR SHALL VERIFY LOCATIONS OF UTILITIES AS MAY BE REQUIRED. THE CONTRACTOR SHALL BE FULLY RESPONSIBLE FOR ANY AND ALL DAMAGES OCCURRING AS A RESULT OF THE CONTRACTOR'S FAILURE TO LOCATE AND PROTECT UNDERGROUND UTILITIES. ALL REPAIRS SHALL BE MADE AT THE CONTRACTOR'S EXPENSE.
6. CONTRACTOR SHALL MAINTAIN AND PROTECT ALL EXISTING UTILITIES AND DRAINAGE AT ALL TIMES. THE CONTRACTOR SHALL REPAIR ANY DAMAGE AND RESTORE TO THE PRE-EXISTING CONDITION AT NO COST TO THE OWNER.
7. CONTRACTOR SHALL PROTECT ALL EXISTING STRUCTURES AND SHALL PERFORM THE WORK IN A MANNER THAT AVOIDS DAMAGE TO EXISTING STRUCTURES. STRUCTURES INCLUDE, BUT ARE NOT LIMITED TO, BUILDINGS, PIERS, BULKHEADS, FLOATS, PIER UTILITIES AND FIXTURES, AND RIPRAP SLOPES. CONTRACTOR SHALL REPAIR ANY DAMAGE AT NO ADDITIONAL COST TO THE CITY.
8. CONTRACTOR SHALL SUPPLY ALL NECESSARY TEMPORARY UTILITIES FOR CONSTRUCTION INCLUDING, BUT NOT LIMITED TO; WATER, POWER, LIGHTING, DATA, AND TELEPHONE.
9. CONTRACTOR SHALL READ AND UNDERSTAND ALL REGULATORY CONDITIONS ASSOCIATED WITH THE PROJECT AND SHALL COMPLY WITH ALL ENVIRONMENTAL REQUIREMENTS AND PERMIT CONDITIONS.
10. CONTRACTOR SHALL PROVIDE A CONFINED CONCRETE TRUCK WASHDOWN AREA AT A LOCATION TO BE APPROVED BY THE ENGINEER. WASHDOWN AREA SHALL INCLUDE PROTECTION TO PAVEMENT, A PERIMETER WALL AND A FILTER FABRIC LINER. NO RUNOFF CONTAINING CEMENT OR OTHER SUSPENDED SOLIDS WILL BE PERMITTED. ALL MATERIALS SHALL BE COMPLETELY REMOVED UPON COMPLETION OF CONSTRUCTION AND DISPOSED OF AT AN APPROVED DISPOSAL LOCATION.

CODES:

1. MAINE DOT STANDARD SPECIFICATIONS, MARCH 2020 ED. WITH SUPPLEMENTAL SPECIFICATIONS THROUGH JUNE 16,2023.
2. MAINE UNIFORM BUILDING AND ENERGY CODE (MUBEC).
3. AMERICAN CONCRETE INSTITUTE (ACI) 318-14: BUILDING CODE REQUIREMENTS FOR STRUCTURAL CONCRETE, 2014 ED.
4. CONCRETE REINFORCING STEEL INSTITUTE (CRSI):
5. AMERICAN INSTITUTE FOR STEEL CONSTRUCTION (AISC) STEEL CONSTRUCTION MANUAL, 15TH ED.
6. ALUMINUM ASSOCIATION, ALUMINUM DESIGN MANUAL, 2015 ED.
7. AMERICAN WOOD COUNCIL, NATIONAL DESIGN SPECIFICATIONS (NDS) FOR WOOD CONSTRUCTION, 2015 ED.

SITE CONTROL AND BASELINES:

1. PROJECT BASE PLAN HAS BEEN DEVELOPED FROM A COMPILATION OF MULTIPLE SURVEYS AS DESCRIBED UNDER "SURVEY AND PROPERTY NOTES".
2. ELEVATIONS ARE PROVIDED IN NAVD88 VERTICAL DATUM UNLESS OTHERWISE NOTED.
3. THE CONTRACTOR SHALL INSTALL SURVEY CONTROL AS NECESSARY TO PERFORM THE WORK. PERMANENT SURVEY CONTROL (AT LEAST 2 POINTS) SHALL BE ESTABLISHED FOR THE PROJECT AND PROTECTED FROM DAMAGE DURING CONSTRUCTION AND PROVIDED ON AS-BUILT DRAWINGS.
4. THE CONTRACTOR SHALL ESTABLISH AND MAINTAIN PROJECT BASELINES AND CONTROL AS REQUIRED TO ENSURE ACCURATE LOCATION OF ALL ELEMENTS OF THE PROJECT.

SURVEY AND PROPERTY NOTES:

1. LOCUS PARCEL IS DEPICTED ON CITY OF BIDDEFORD, TAX MAP 52, LOT 4 AND IS LOCATED IN THE INSTITUTIONAL (IN) ZONE. A PORTION OF THE SITE IS LOCATED IN THE LIMITED RESIDENTIAL (LR) SHORELAND OVERLAY DISTRICT.
2. THE RECORD OWNER IS THE UNIVERSITY OF NEW ENGLAND, BY DEED DATED APRIL 18, 1962, RECORDED IN THE YORK COUNTY REGISTRY OF DEEDS IN BOOK 1484, PAGE 0145.
3. UPLAND TOPOGRAPHY AND BASE SURVEY INFORMATION DEPICTED HEREON ARE BASED ON THE FOLLOWING SURVEYS:
   - "TOPOGRAPHIC SURVEY, MARINE SCIENCE CENTER, UNIVERSITY OF NEW ENGLAND" BY OWEN HASKELL, INC. DATED DEC. 13, 2022.
   - "TOPOGRAPHIC SURVEY AT MARINE SCIENCE CENTER" BY STATEWIDE SURVEYS, INC., DATED MAY 4, 2015.
4. HYDROGRAPHIC DATA DEPICTED HEREON IS BASED ON 2022 SURVEY BY OWEN HASKELL SURVEY.
5. FEDERAL CHANNEL LIMITS ARE DEPICTED BASED ON THE PLAN. "SACO RIVER, SACE AND BIDDEFORD, MAINE, CONDITION SURVEY" PUBLISHED BY THE U.S. ARMY CORPS OF ENGINEERS, DATED JULY 3, 2021.
6. HORIZONTAL COORDINATES ARE BASED ON NAD83 MAINE STATE PLANE WEST ZONE-1801 AND ARE EXPRESSED IN FEET. ELEVATIONS ARE BASED ON NAVD88 VERTICAL DATUM AND CONTROL POINTS PROVIDED BY UNE.
7. UTILITY INFORMATION DEPICTED HEREON IS BASED ON FEBRUARY 2023 UTILITY LOCATION SURVEY PERFORMED BY BLOOD HOUND, LLC UNDERGROUND UTILITY LOCATORS AND MAY NOT NECESSARILY REPRESENT ALL EXISTING UTILITIES. CONTACT DIG SAFE (1-888-DIG-SAFE) AND VERIFY EXISTING UTILITIES PRIOR TO ANY CONSTRUCTION OR EXCAVATION.
8. PORTIONS OF THE PROPERTY ARE DEPICTED AS BEING IN A SPECIAL FLOOD HAZARD AREA BASED ON FEMA PRELIMINARY FIRM 23031C0459G DATED APRIL 14, 2017. THE SITE IS LOCATED IN A VE ZONE HAVING BASE FLOOD ELEVATION OF 14 FT NAVD88.
9. SUBSURFACE INFORMATION IS BASED ON EXPLORATIONS PERFORMED IN 2015 AND 2022 CONSISTING OF BORINGS, PROBES, AND TEST PITS. REFER TO SHEETS B-001 - B-005 FOR SUBSURFACE INFORMATION.

CONCRETE

1. CAST IN PLACE CONCRETE SHALL CONFORM TO THE FOLLOWING SPECIFICATIONS BASED ON THE MAINE DOT STANDARD SPECIFICATION:

LOCATION	MDOT CLASS	f'c
ALL CONCRETE	CLASS LP	5,000 PSI

2. ALL REINFORCEMENT SHALL BE NEW DEFORMED BARS, GRADE 60 CONFORMING TO ASTM A615, HOT DIP GALVANIZED ACCORDING TO ASTM A767/A767M OR ASTM A1094/A1094M.
3. REINFORCEMENT ACCESSORIES SHALL BE DIELECTRIC COATED STEEL OR APPROVED PLASTIC.
3. GROUT SHALL BE A HIGH STRENGTH, NON-SHRINK GROUT WITH SALT WATER RESISTANCE.
4. CONCRETE COVER SHALL BE A MINIMUM OF 3 INCHES UNLESS NOTED OTHERWISE.
5. ALL EXPOSED EDGES OF CONCRETE AT COLD JOINTS SHALL HAVE A ROUGHENED FINISH AND BE COATED WITH EPOXY BONDING AGENT PRIOR TO CASTING ADJACENT POUR.
6. PROVIDE 1 INCH CHAMFER ON ALL EXPOSED EDGES UNLESS NOTED OR DIRECTED OTHERWISE.
7. TOP SURFACE OF EXPOSED CONCRETE SHALL RECEIVE A BROOM FINISH.
8. COAT FINISHED SURFACES OF CONCRETE WITH A 100% SILANE PENETRATING CONCRETE SEALER SUITABLE FOR USE IN A MARINE ENVIRONMENT. SEALER SHALL BE LISTED ON THE MAINE DOT QUALIFIED PRODUCTS LIST.
9. REINFORCEMENT DEVELOPMENT AND LAP SPLICE LENGTHS SHALL BE IN ACCORDANCE WITH ACI 318.
10. CONCRETE MIX DESIGN SHALL INCLUDE THE USE OF CORROSION INHIBITING ADMIXTURE AT DOSAGE SUITABLE FOR USE IN AN AGGRESSIVE MARINE ENVIRONMENT. CORROSION INHIBITOR SHALL BE LISTED ON THE MAINE DOT QUALIFIED PRODUCTS LIST.

EPOXY ANCHORS

1. ANCHOR ROD, WASHERS, AND NUTS SHALL CONFORM TO ASTM F1554, GRADE 36, AND SHALL BE HOT DIP GALVANIZED.
2. THE MINIMUM EDGE DISTANCE AND MINIMUM SPACING FOR ALL ANCHORS SHALL BE 6 BOLT DIAMETERS.
3. ALL HOLES SHALL BE DRILLED TO THE RECOMMENDED DIAMETER PER MANUFACTURERS REQUIREMENTS USING CARBIDE DRILL BITS MEETING ANSI B212.5-1994.
4. HOLES SHALL BE BRUSHED WITH NYLON BRUSH AND BLOWN CLEAN USING OIL-FREE COMPRESSED AIR A MINIMUM OF TWO TIMES.
5. ALL HOLES SHALL BE FREE OF STANDING WATER BEFORE INSTALLING ANCHORS.
6. EPOXY SHALL HAVE MINIMUM BOND STRENGTH OF 1,600 PSI @ 14 DAYS.

EARTHWORK

1. EARTHWORK MATERIALS SHALL MEET THE FOLLOWING SPECIFICATIONS:

AGGREGATE BASE	TYPE A (MDOT 703.06A)
AGGREGATE SUBBASE	TYPE D (MDOT 703.06C)
WALL BACKFILL	CRUSHED STONE $\frac{3}{4}$" (MDOT 703.13)
DRAINAGE STONE	CRUSHED STONE 2 INCH (MDOT 703.31)
ORDINARY BORROW	SEE #2 BELOW.

2. ORDINARY BORROW SHALL BE EXISTING GRANULAR SOIL WITH MAXIMUM 4 INCH STONE SUBJECT TO APPROVAL BY THE ENGINEER. ALL DEBRIS OR OTHER DELETERIOUS MATERIALS SHALL BE REMOVED FROM ORDINARY BORROW PRIOR TO REUSE.

STEEL

1. STEEL ANGLE, STRAPS, AND MISCELLANEOUS FABRICATIONS SHALL BE ASTM A36 HOT DIP GALVANIZED AFTER FABRICATION, UNLESS OTHERWISE NOTED.
2. ALL FASTENERS SHALL BE HOT-DIP GALVANIZED OR STAINLESS STEEL.
3. ALL BOLTS SHALL CONFORM TO ASTM A307. MINIMUM SIZE SHALL BE $\frac{5}{8}$ INCH UNLESS OTHERWISE NOTED.

HEAVY TIMBER

1. UNLESS OTHERWISE SPECIFIED, ALL TIMBER FRAMING TO BE USED SHALL BE NO. 1 AND BETTER SOUTHERN PINE AS GRADED BY SPIB AND WITH DESIGN VALUES PER NDS 2015.
2. ALL TIMBER SHALL BE NEW AND SUPPLIED WITH NOMINAL DIMENSIONS UNLESS OTHERWISE NOTED.
3. ALL NEW SOUTHERN YELLOW PINE TIMBER MEMBERS TO WHICH THE PUBLIC MAY BE EXPOSED SHALL BE TREATED WITH ALKALINE COPPER QUATERNARY (ACQ) IN ACCORDANCE WITH AWPA & AWPB W/ MINIMUM RETENTION OF 0.60 LBS. PER CUBIC FOOT. ALL OTHER SOUTHERN YELLOW PINE MEMBERS SHALL BE CCA TREATED TO 2.5 PCF RETENTION.
4. ALL EXPOSED EDGES SHALL BE PLANED OR SANDED TO PROVIDE SMOOTH SURFACE FREE OF ROUGH EDGES OR DEFECTS.
5. ALL EXPOSED FASTENERS SHALL BE COUNTERSUNK.
6. DOCK WASHERS SHALL BE PROVIDED BENEATH NUT OR BOLT HEAD OF ALL TIMBER BOLTED CONNECTIONS. TIMBER BOLTS SHALL BE CONSIDERED AN ACCEPTABLE ALTERNATIVE TO HEX HEADED BOLTS WITH DOCK WASHERS.
7. STANDARD WASHERS SHALL BE PERMISSIBLE WHERE CONNECTED PARTS INCLUDE STEEL PLATES, ANGLES, BRACKETS, OR BACKER PLATES.

TIMBER PILES

1. TIMBER PILES SHALL BE TROPICAL GREENHEART AND SHALL CONFORM TO ASTM D25.
2. PROVIDE PROTECTION TO PILE TIP AND BUTT TO AVOID DAMAGE DURING DRIVING.
3. PILES SHALL BE ORDERED MINIMUM 5 FT LONGER THAN TABULATED LENGTHS TO ALLOW FOR INSTALLATION VARIABILITY AND CUTOFF.
4. ALL TIMBER PILES SHALL BE DRIVEN TO THE MINIMUM EMBEDMENT OR CAPACITY CRITERIA INDICATED IN THE PILE SCHEDULE. FENDER PILES MAY BE INSTALLED TO THE REQUIRED DEPTH USING A VIBRATORY HAMMER. IN THE EVENT THAT A VIBRATORY HAMMER IS UNABLE TO ACHIEVE THE MINIMUM REQUIRED EMBEDMENT, THE CONTRACTOR WILL BE RESPONSIBLE FOR COMPLETING FINAL SET USING AN IMPACT HAMMER.
5. GREENHEART PILES SHALL BE BANDED WITH 1½ INCH STAINLESS STEEL UTILITY STRAPPING PRIOR TO CUTOFF. REFER TO DETAIL ON SHEET S-009.

ASPHALT

1. PAVING GRADES SHALL PITCH TO EXISTING STRUCTURES.
2. PAVEMENT SHALL CONSIST OF 4" OF HOT MIX ASPHALT PLACED IN TWO COURSES, SEE DETAIL.
3. CONTRACTOR TO SAW CUT PAVEMENT AT LIMIT OF REMOVAL.
4. CONTRACTOR TO PROVIDE SMOOTH TRANSITIONS BETWEEN NEW AND EXISTING ASPHALT.
5. CONTRACTOR TO SEAL JOINT BETWEEN NEW AND EXISTING ASPHALT WITH BITUMINOUS JOINT SEALANT.

GEOTEXTILE

1. GEOTEXTILE SEPARATION FABRIC SHALL BE MIRAFI FW700 OR EQUIVALENT.
2. OVERLAP ALL SEAMS MINIMUM 2 FT.
3. INSTALL PER MANUFACTURERS RECOMMENDATIONS.

STEEL PIPE PILES

1. STEEL PIPE PILES SHALL CONFORM TO ASTM A252, GRADE 3.
2. ALL PILES SHALL BE SEAMLESS.
3. AN OPEN CUTTING SHOE IS REQUIRED.
4. PIPE PILES SHALL BE COATED WITH FUSION BONDED EPOXY, COLOR BROWN. MINIMUM COATING THICKNESS SHALL BE 18-20 MIL. COATING SHALL EXTEND FROM TOP OF PILE DOWN TO MINIMUM 5-FEET BELOW GRADE.
5. DAMAGE TO ANY STEEL COATING SHALL BE TOUCHED UP BY THE CONTRACTOR USING APPROVED MATERIALS AND METHODS.
6. ALL PILES SHALL BE FILLED TO THE TOP WITH CONCRETE AFTER INSTALLATION. ROCK-SOCKETED PILES SHALL BE CLEANED OUT AND FILLED FOR THEIR ENTIRE LENGTH PRIOR TO CONCRETE FILLING. DRIVEN PILES SHALL BE CLEANED OUT TO MINIMUM 10-FEET BELOW ADJACENT MUDLINE.
7. REFER TO PILE SCHEDULE ON SHEET S-005 FOR ESTIMATED PILE LENGTHS, COATING LENGTHS, SIZES, AND SOCKETING REQUIREMENTS.

TIMBER FLOATS

1. FLOAT MANUFACTURER SHALL SUBMIT SHOP DRAWINGS AND CALCULATIONS SIGNED AND SEALED BY A MAINE LICENSED PROFESSIONAL ENGINEER. MANUFACTURER SHALL BE RESPONSIBLE FOR FINAL DETERMINATION OF FLOAT FRAMING AND DRUM LAYOUT TO MEET BOUYANCY, LOADING, AND ENVIRONMENTAL EXPOSURE REQUIREMENTS IN ACCORDANCE WITH THE SPECIFICATIONS.
2. UNLESS OTHERWISE SPECIFIED, ALL TIMBER TO BE USED SHALL BE NO. 1 AND BETTER SOUTHERN PINE AS GRADED BY SPIB AND WITH DESIGN VALUES PER NFPA NATIONAL DESIGN SPECIFICATION OR THE EQUIVALENT FOR DOUGLAS FIR AS GRADED BY WCLIB AND WWPA.
3. ALL TIMBER SHALL BE NEW AND SUPPLIED WITH NOMINAL DIMENSIONS.
4. ALL TIMBER MEMBERS TO WHICH THE PUBLIC MAY BE EXPOSED SHALL BE TREATED WITH ALKALINE COPPER QUATERNARY (ACQ) IN ACCORDANCE WITH AWPA & AWPB W/ MINIMUM RETENTION OF 0.40 LBS. PER CUBIC FOOT. ALL OTHER SOUTHERN YELLOW PINE MEMBERS SHALL BE CCA TREATED TO 2.5 PCF RETENTION.
5. DECKING SHALL BE NO. 1 SOUTHERN PINE, MINIMUM SIZE 2X6.
6. MISC. HARDWARE: GALVANIZED STEEL PLATES AND ALL BOLTS AND RELATED HARDWARE SHALL BE FASHIONED FROM STEEL AND GALVANIZED AFTER FABRICATION AND IN ACCORDANCE WITH REQUIREMENTS OF ASTM A123, AND/OR A153. BOLTS AND NUTS SHALL CONFORM TO ASTM A307.
7. CONNECTION HARDWARE SHALL BE FABRICATED FROM ASTM-A36 GRADE STEEL WITH MINIMUM THICKNESS ¼".
8. PROVIDE GUIDE/WEARING BRACKETS AT GANGWAY LANDING ON FLOAT 'C' PER DETAIL A ON SHEET S-012. BRACKETS SHALL BE LOCATED IN FIELD TO BE CENTERED ON GANGWAY RANGE OF TRAVEL AT MID-TIDE ELEVATION.
9. TRANSITIONS BETWEEN FLOATING DOCKS SHALL INCLUDE ADA COMPLIANT TRANSITION PLATES ACROSS GAPS AT HINGE LOCATIONS.
10. FLOATING DOCKS SHALL MEET THE FOLLOWING LOADING AND FREEBOARD CRITERIA:

DEAD LOAD	20 INCH FREEBOARD
20 PSF UNIFORM LIVE LOAD	MINIMUM 8 INCH FREEBOARD
40 PSF UNIFORM LIVE LOAD	MINIMUM ZERO FREEBOARD

DEAD LOADS SHALL INCLUDE ALL COMPONENTS AND ATTACHMENTS INCLUDING WEIGHT OF ALUMINUM GANGWAY BEARING ON FLOAT 'C'.

ALUMINUM GANGWAY

1. GANGWAY MANUFACTURER SHALL SUBMIT SHOP DRAWINGS AND CALCULATIONS SIGNED AND SEALED BY A MAINE LICENSED PROFESSIONAL ENGINEER. MANUFACTURER SHALL BE RESPONSIBLE FOR FINAL DETERMINATION OF GANGWAY FRAMING AND CONFIGURATION TO MEET STRUCTURAL, PERFORMANCE, AND ACCESSIBILITY REQUIREMENTS IN ACCORDANCE WITH THE SPECIFICATIONS.
2. GANGWAY SHALL MEET THE FOLLOWING LOADING AND DEFLECTION CRITERIA:
   - DEAD LOAD SHALL CONSIST OF WEIGHT OF THE ENTIRE GANGWAY STRUCTURE PLUS ANY UTILITIES AND ATTACHMENTS.
   - ALLOWABLE STRESSES IN DECK SURFACE, GANGWAY FRAMING, AND MOUNTING COMPONENTS SHALL NOT BE EXCEEDED AT A UNIFORM LIVE LOAD OF 100 PSF.
   - 50 PSF UNIFORM LIVE LOAD MAX. DEFLECTION L/360
   - 100 PSF UNIFORM LIVE LOAD MAX. DEFLECTION NOT TO EXCEED GANGWAY CAMBER
   - ALL HANDRAIL AND POSTS SHALL BE DESIGNED TO WITHSTAND A 200 LB LOAD APPLIED IN ANY DIRECTION OR A 50 LB/FT LOAD APPLIED ALONG THE HANDRAIL LENGTH.
3. GANGWAY HINGES SHALL BE CAPABLE OF TRAVELING FREELY AND WITHOUT BINDING THROUGH THE ENTIRE RANGE OF WATER LEVELS FROM MLLW TO BASE FLOOD ELEVATION PLUS TWO-FEET OF ADDITIONAL ELEVATION IN EITHER DIRECTION.

FOR PERMIT

Attention:
0 1"
If this scale bar does not measure 1" then drawing is not original scale.

STATE OF MAINE
BRIAN M. MCDEVITT
PE18260
LICENSED
PROFESSIONAL ENGINEER
6/9/2025

Designed:	DJB
Drawn:	JAM
Checked:	BJB
Approved:	BMM
P.E. No:	13033
GEI Project	2203703

GEI Consultants
GEI CONSULTANTS, INC.
5 MILK STREET
PORTLAND, ME 04101
(207)797-8901

UNE
UNIVERSITY OF NEW ENGLAND
11 HILLS BEACH RD.
BIDDEFORD, MAINE

UNIVERSITY OF NEW ENGLAND MARINE SCIENCE CENTER PIER

11 HILLS BEACH ROAD
BIDDEFORD, YORK COUNTY, MAINE

NO	DATE	ISSUE/REVISION	APP
8	6/5/2025	ADDRESS PB COMMENTS	DJB
7	4/16/2025	BIDDEFORD PERMIT APP.	DJB
6	9/17/2024	REVISED PERMIT SET	DJB
5	6/27/2024	REVISED PERMIT SET	DJB
4	9/14/2023	DEP PERMIT SET	DJB
3	6/28/2023	75% DESIGN SUBMISSION	DJB
2	2/15/2023	30% DESIGN SUBMISSION	DJB
1	12/9/2022	15% DESIGN SUB REV	DJB
0	11/11/2022	15% DESIGN SUBMISSION	DJB

SHEET NAME
GENERAL NOTES

SHEET NO.
G-002

DIGASTELNJOVO, VINNIE B:\Working\UNIVERSITY OF NEW ENGLAND\2203703 UNE Marine Science Center Pier\00_CAD\Design\Sheets\2203703-G-002.dwg - 6/9/2025



0 200 400

SCALE, FEET

FOR PERMIT

Attention:

0 1"

If this scale bar does not measure 1" then drawing is not original scale.

STATE OF MAINE
BRIAN M. MCDEVITT
PE18260
LICENSED
PROFESSIONAL ENGINEER

6/9/2025

Designed:	DJB
Drawn:	JAM
Checked:	BJB
Approved:	BMM
P.E. No:	13033
GEI Project	2203703

GEI Consultants
GEI CONSULTANTS, INC.
5 MILK STREET
PORTLAND, ME 04101
(207)797-8901

UNE
UNIVERSITY OF NEW ENGLAND
11 HILLS BEACH RD.
BIDDEFORD, MAINE

UNIVERSITY OF NEW ENGLAND MARINE SCIENCE CENTER PIER

11 HILLS BEACH ROAD
BIDDEFORD, YORK COUNTY, MAINE

NO	DATE	ISSUE/REVISION	APP
8	6/5/2025	ADDRESS PB COMMENTS	DJB
7	4/16/2025	BIDDEFORD PERMIT APP.	DJB
6	9/17/2024	REVISED PERMIT SET	DJB
5	6/27/2024	REVISED PERMIT SET	DJB
4	9/14/2023	DEP PERMIT SET	DJB
3	6/28/2023	75% DESIGN SUBMISSION	DJB
2	2/15/2023	30% DESIGN SUBMISSION	DJB
1	12/9/2022	15% DESIGN SUB REV	DJB
0	11/11/2022	15% DESIGN SUBMISSION	DJB

SHEET NAME: **VICINITY PLAN**

SHEET NO.: **G-003**

DICASTELNUOVO, VINNIE B:\Working\UNIVERSITY OF NEW ENGLAND\2203703 UNE Marine Science Center Pier\00_CAD\Design\Sheets\2203703-G-003.dwg - 6/8/2025

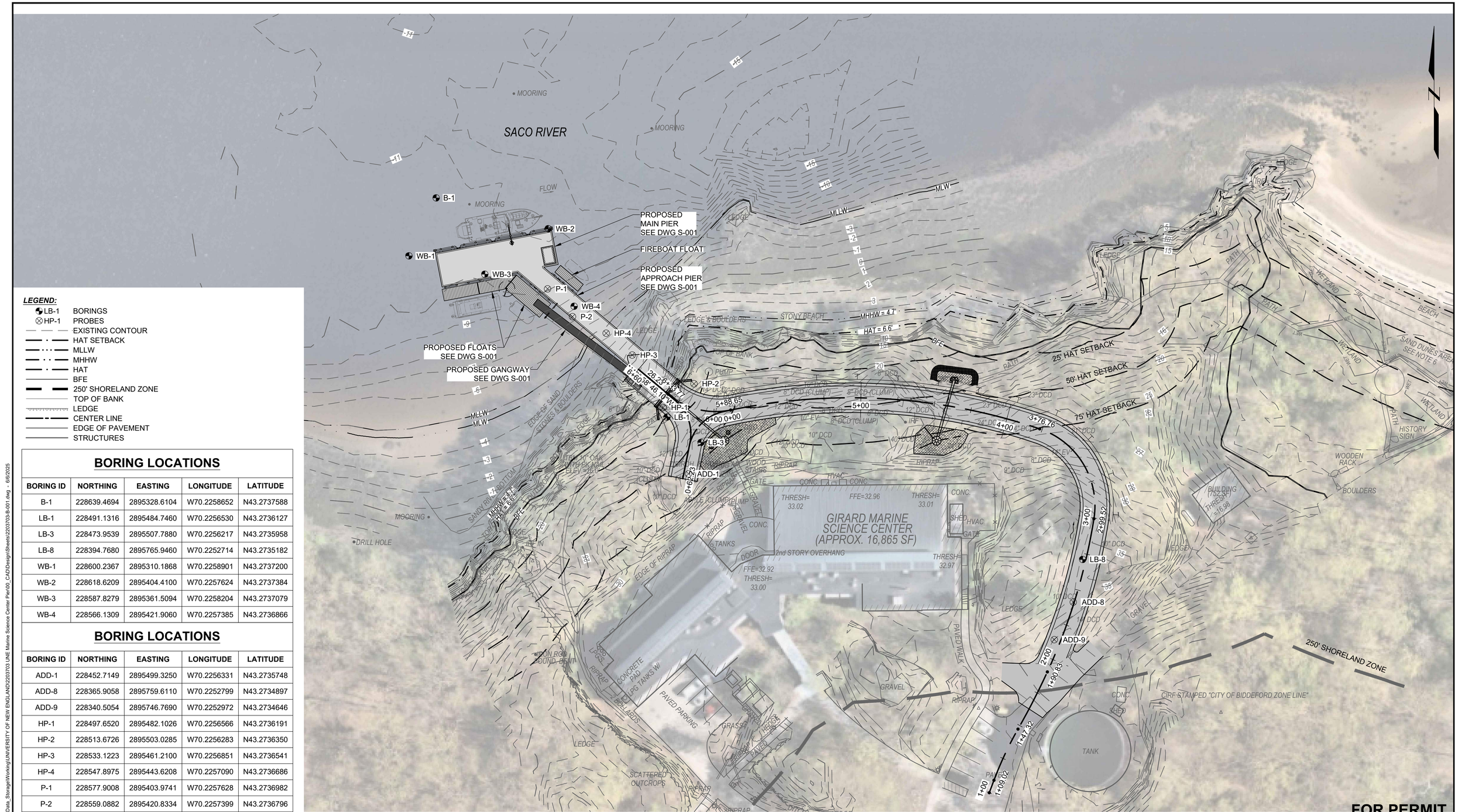

LEGEND:

- LB-1 BORINGS
- HP-1 PROBES
- EXISTING CONTOUR
- HAT SETBACK
- MLLW
- MHHW
- HAT
- BFE
- 250' SHORELAND ZONE
- TOP OF BANK
- LEDGE
- CENTER LINE
- EDGE OF PAVEMENT
- STRUCTURES

BORING LOCATIONS

BORING ID	NORTHING	EASTING	LONGITUDE	LATITUDE
B-1	228639.4694	2895328.6104	W70.2258652	N43.2737588
LB-1	228491.1316	2895484.7460	W70.2256530	N43.2736127
LB-3	228473.9539	2895507.7880	W70.2256217	N43.2735958
LB-8	228394.7680	2895765.9460	W70.2252714	N43.2735182
WB-1	228600.2367	2895310.1868	W70.2258901	N43.2737200
WB-2	228618.6209	2895404.4100	W70.2257624	N43.2737384
WB-3	228587.8279	2895361.5094	W70.2258204	N43.2737079
WB-4	228566.1309	2895421.9060	W70.2257385	N43.2736866

BORING LOCATIONS

BORING ID	NORTHING	EASTING	LONGITUDE	LATITUDE
ADD-1	228452.7149	2895499.3250	W70.2256331	N43.2735748
ADD-8	228365.9058	2895759.6110	W70.2252799	N43.2734897
ADD-9	228340.5054	2895746.7690	W70.2252972	N43.2734646
HP-1	228497.6520	2895482.1026	W70.2256566	N43.2736191
HP-2	228513.6726	2895503.0285	W70.2256283	N43.2736350
HP-3	228533.1223	2895461.2100	W70.2256851	N43.2736541
HP-4	228547.8975	2895443.6208	W70.2257090	N43.2736686
P-1	228577.9008	2895403.9741	W70.2257628	N43.2736982
P-2	228559.0882	2895420.8334	W70.2257399	N43.2736796

ELEVATION	MLLW	NAVD88*
BFE	+19.0	+14.0
HAT	+11.6	+6.6
MHHW	+9.7	+4.7
MHW	+9.3	+4.3
MSL	+4.8	-0.2
MLW	+0.3	-4.7
MLLW	0.0	-5.0

*PROJECT DATUM

0 30 60
SCALE, FEET

Attention:
0 1"
If this scale bar does not measure 1" then drawing is not original scale.

STATE OF MAINE
BRIAN M. MCDEVITT
PE18260
LICENSED
PROFESSIONAL ENGINEER
6/9/2025

Designed:	DJB
Drawn:	JAM
Checked:	BJB
Approved:	BMM
P.E. No:	13033
GEI Project	2203703

GEI Consultants
GEI CONSULTANTS, INC.
5 MILK STREET
PORTLAND, ME 04101
(207)797-8901

UNE
UNIVERSITY OF NEW ENGLAND
11 HILLS BEACH RD.
BIDDEFORD, MAINE

UNIVERSITY OF NEW ENGLAND MARINE SCIENCE CENTER PIER

11 HILLS BEACH ROAD
BIDDEFORD, YORK COUNTY, MAINE

NO	DATE	ISSUE/REVISION	APP
8	6/5/2025	ADDRESS PB COMMENTS	DJB
7	4/16/2025	BIDDEFORD PERMIT APP.	DJB
6	9/17/2024	REVISED PERMIT SET	DJB
5	6/27/2024	REVISED PERMIT SET	DJB
4	9/14/2023	DEP PERMIT SET	DJB
3	6/28/2023	75% DESIGN SUBMISSION	DJB
2	2/15/2023	30% DESIGN SUBMISSION	DJB
1	12/9/2022	15% DESIGN SUB REV	DJB
0	11/11/2022	15% DESIGN SUBMISSION	DJB

SHEET NAME
BORING LOCATION PLAN

SHEET NO.
B-001

DJCASTELNUOVO, VINNIE \\geiconsultants.com\data\Data_Storage\Working\UNIVERSITY OF NEW ENGLAND\2203703 UNE Marine Science Center Pier\00_CAD\Design\Sheets\2203703-B-001.dwg - 6/6/2025

DICASTELNUOVO, VINNIE \\gzaconsultants.com\data\Data_Storage\Working\UNIVERSITY OF NEW ENGLAND\2203703 UNE Marine Science Center Pier\00_CAD\Design\Sheets\2203703-B-002.dwg - 6/6/2025

TEST BORING LOG

GZA GeoEnvironmental, Inc. *Engineers and Scientists*

University of New England
Marine Science Center Pier
Biddeford, Maine

EXPLORATION NO.: B-1
SHEET: 1 of 3
PROJECT NO: 09.0025897.00
REVIEWED BY:

Logged By: B. Cardali
Drilling Co.: New England Boring
Foreman: Brad Enos

Type of Rig: Barge
Rig Model:
Drilling Method: Drive and Wash

Boring Location: See Plan
Ground Surface Elev. (ft.): +10.6
Final Boring Depth (ft.): 65.8
Date Start - Finish: 11/9/2015 - 11/10/2015

H. Datum:
V. Datum: NAVD 88

Hammer Type: Safety
Hammer Weight (lb.): 140
Hammer Fall (in.): 30
Auger or Casing O.D./I.D Dia (in.):

Sampler Type: SS
Sampler O.D. (in.): 2.0
Sampler Length (in.): 24
Rock Core Size: NQ

Groundwater Depth (ft.)

Date	Time	Water Depth	Stab. Time

Depth (ft.)	Casing Blows/ Core Rate	No.	Sample Depth (ft.)	Sample Pen. (in)	Sample Rec. (in)	Sample Blows (per 6 in.)	SPT Value	Sample Description and Identification (Modified Burmister Procedure)	Remarks	Field Test Data	Depth (ft.)	Stratum Description	Elev. (ft.)
0													
	3	S-1	0-2	24	5	1 2	3	S-1: Very loose, brown, fine to coarse SAND, trace Silt.					
	4					1 2							
	6												
	9												
	16												
5	5	S-2	5-7	24	4	3 2	4	S-2: Loose, brown, fine to coarse SAND, trace Silt.					
	6					2 2							
	9												
	11												
	10												
10	8	S-3	10-12	24	3	1 2	4	S-3: Loose, brown, fine to coarse SAND, trace Silt.					
	6					2 2							
	8												SAND
	13												
	19												
15	7	S-4	15-17	24	8	2 2	4	S-4: Loose, brown, fine to coarse SAND, trace Silt.					
	15					2 4							
	28												
	35												
	31										19.6		-26.1
20	OPEN	S-5	20-22	24	17	7 3	4	S-5: Medium Stiff, gray, Silty CLAY, little fine Sand.		1			
						1 2							
25		S-6	25-27	24	24	2 1	3	S-6: Soft, gray, Silty CLAY, little fine Sand.					SILTY CLAY
						2 1							
30													

REMARKS

1 - 4" casing installed to 20.0' below mudline (bml), then wash ahead to 51.0' bml.

See Log Key for exploration of sample description and identification procedures. Stratification lines represent approximate boundaries between soil and bedrock types. Actual transitions may be gradual. Water level readings have been made at the times and under the conditions stated. Fluctuations of groundwater may occur due to other factors than those present at the times the measurements were made.

Exploration No.: B-1

GZA TEMPLATE TEST BORING, 12/7/2015, 1:02:01 PM

TEST BORING LOG

GZA GeoEnvironmental, Inc. *Engineers and Scientists*

University of New England
Marine Science Center Pier
Biddeford, Maine

EXPLORATION NO.: B-1
SHEET: 2 of 3
PROJECT NO: 09.0025897.00
REVIEWED BY:

Logged By: B. Cardali
Drilling Co.: New England Boring
Foreman: Brad Enos

Type of Rig: Barge
Rig Model:
Drilling Method: Drive and Wash

Boring Location: See Plan
Ground Surface Elev. (ft.): +10.6
Final Boring Depth (ft.): 65.8
Date Start - Finish: 11/9/2015 - 11/10/2015

H. Datum:
V. Datum: NAVD 88

Hammer Type: Safety
Hammer Weight (lb.): 140
Hammer Fall (in.): 30
Auger or Casing O.D./I.D Dia (in.):

Sampler Type: SS
Sampler O.D. (in.): 2.0
Sampler Length (in.): 24
Rock Core Size: NQ

Groundwater Depth (ft.)

Date	Time	Water Depth	Stab. Time

Depth (ft.)	Casing Blows/ Core Rate	No.	Sample Depth (ft.)	Sample Pen. (in)	Sample Rec. (in)	Sample Blows (per 6 in.)	SPT Value	Sample Description and Identification (Modified Burmister Procedure)	Remarks	Field Test Data	Depth (ft.)	Stratum Description	Elev. (ft.)
35													
		S-7	40-42	24	24	WOR		S-7: Very soft, gray, Silty CLAY, trace fine Sand.					
40						WOR	0						
						WOH							SILTY CLAY
						WOH							
45													
50													
	16	S-8	51-53	24	8	18 6		S-8: Medium dense, gray, fine to coarse SAND, some Gravel, trace Silty Clay.			51		-41.0
	13					15 29	21			2			
	30												
	26												
55	27												
	38	S-9	56-58	24	5	10 19		S-9: Dense, gray, GRAVEL, some fine to coarse Sand, trace Silty Clay.					GLACIAL TILL
	24					27 24	46						
	29												
60	9												

REMARKS

2 - Advanced 3" casing to 61.6' bml to core bedrock.

See Log Key for exploration of sample description and identification procedures. Stratification lines represent approximate boundaries between soil and bedrock types. Actual transitions may be gradual. Water level readings have been made at the times and under the conditions stated. Fluctuations of groundwater may occur due to other factors than those present at the times the measurements were made.

Exploration No.: B-1

GZA TEMPLATE TEST BORING, 12/7/2015, 1:02:01 PM

TEST BORING LOG

GZA GeoEnvironmental, Inc. *Engineers and Scientists*

University of New England
Marine Science Center Pier
Biddeford, Maine

EXPLORATION NO.: B-1
SHEET: 3 of 3
PROJECT NO: 09.0025897.00
REVIEWED BY:

Logged By: B. Cardali
Drilling Co.: New England Boring
Foreman: Brad Enos

Type of Rig: Barge
Rig Model:
Drilling Method: Drive and Wash

Boring Location: See Plan
Ground Surface Elev. (ft.): +10.6
Final Boring Depth (ft.): 65.8
Date Start - Finish: 11/9/2015 - 11/10/2015

H. Datum:
V. Datum: NAVD 88

Hammer Type: Safety
Hammer Weight (lb.): 140
Hammer Fall (in.): 30
Auger or Casing O.D./I.D Dia (in.):

Sampler Type: SS
Sampler O.D. (in.): 2.0
Sampler Length (in.): 24
Rock Core Size: NQ

Groundwater Depth (ft.)

Date	Time	Water Depth	Stab. Time

Depth (ft.)	Casing Blows/ Core Rate	No.	Sample Depth (ft.)	Sample Pen. (in)	Sample Rec. (in)	Sample Blows (per 6 in.)	SPT Value	Sample Description and Identification (Modified Burmister Procedure)	Remarks	Field Test Data	Depth (ft.)	Stratum Description	Elev. (ft.)
60													
	75											GLACIAL TILL	
		C-1	61.6-61.7	32	32			C-1: Hard, fresh, fine grained, gray, GNEISS. Joints are very close to closely spaced, moderately dipping, planar, rough, fresh to discolored. RQD = 31%	3		61.6		-72.0
65		C-2	64.3-65.8	18	18			C-2: Hard, fresh, fine grained, gray, GNEISS. Joints are extremely close to closely spaced, moderately dipping to high angle, planar, rough to smooth, fresh to discolored. RQD = 0%				GNEISS	
								End of exploration at 65.8 feet.			65.8		-79.4
70													
75													
80													
85													
90													

REMARKS

3 - Casing refusal at 61.6' bml. Set up to core.

See Log Key for exploration of sample description and identification procedures. Stratification lines represent approximate boundaries between soil and bedrock types. Actual transitions may be gradual. Water level readings have been made at the times and under the conditions stated. Fluctuations of groundwater may occur due to other factors than those present at the times the measurements were made.

Exploration No.: B-1

GZA TEMPLATE TEST BORING, 12/7/2015, 1:02:01 PM

2015 BORING B-1

TEST BORING LOG

GZA GeoEnvironmental, Inc. *Engineers and Scientists*

University of New England
Marine Science Center Pier
Biddeford, Maine

EXPLORATION NO.: P-1
SHEET: 1 of 2
PROJECT NO: 09.0025897.00
REVIEWED BY:

Logged By: B Cardali
Drilling Co.: New England Boring
Foreman: Brad Enos

Type of Rig: Barge
Rig Model:
Drilling Method: Rod Probe

Boring Location: See Plan
Ground Surface Elev. (ft.): -10.2
Final Boring Depth (ft.): 52.3
Date Start - Finish: 11/10/2015 - 11/10/2015

H. Datum:
V. Datum: NAVD 88

Hammer Type: Safety
Hammer Weight (lb.): 300
Hammer Fall (in.): 24
Auger or Casing O.D./I.D Dia (in.):

Sampler Type:
Sampler O.D. (in.):
Sampler Length (in.):
Rock Core Size:

Groundwater Depth (ft.)

Date	Time	Water Depth	Stab. Time

Depth (ft.)	Casing Blows/ Core Rate	No.	Sample Depth (ft.)	Sample Pen. (in)	Sample Rec. (in)	Sample Blows (per 6 in.)	SPT Value	Sample Description and Identification (Modified Burmister Procedure)	Remarks	Field Test Data	Depth (ft.)	Stratum Description	Elev. (ft.)
0													
	3												
	6												
	6												
	10												
5	9												
	6												
	6												
	7												
	15												
10	16												
	14												
	8												
	7												
15	13												
	37												
	19												
	15												
20	13												
	12												
	22												
	16												
	14												
25	12												
	25												
	21												
	18												
30	17												

REMARKS

1 - Possible transition to Silty Clay at approximately 17.0' below mudline (bml) (El. -26.9'), based on increased driving resistance to advance probe.

See Log Key for exploration of sample description and identification procedures. Stratification lines represent approximate boundaries between soil and bedrock types. Actual transitions may be gradual. Water level readings have been made at the times and under the conditions stated. Fluctuations of groundwater may occur due to other factors than those present at the times the measurements were made.

Exploration No.: P-1

GZA TEMPLATE TEST BORING, 12/7/2015, 1:02:02 PM

TEST BORING LOG

GZA GeoEnvironmental, Inc. *Engineers and Scientists*

University of New England
Marine Science Center Pier
Biddeford, Maine

EXPLORATION NO.: P-1
SHEET: 2 of 2
PROJECT NO: 09.0025897.00
REVIEWED BY:

Logged By: B Cardali
Drilling Co.: New England Boring
Foreman: Brad Enos

Type of Rig: Barge
Rig Model:
Drilling Method: Rod Probe

Boring Location: See Plan
Ground Surface Elev. (ft.): -10.2
Final Boring Depth (ft.): 52.3
Date Start - Finish: 11/10/2015 - 11/10/2015

H. Datum:
V. Datum: NAVD 88

Hammer Type: Safety
Hammer Weight (lb.): 300
Hammer Fall (in.): 24
Auger or Casing O.D./I.D Dia (in.):

Sampler Type:
Sampler O.D. (in.):
Sampler Length (in.):
Rock Core Size:

Groundwater Depth (ft.)

Date	Time	Water Depth	Stab. Time

Depth (ft.)	Casing Blows/ Core Rate	No.	Sample Depth (ft.)	Sample Pen. (in)	Sample Rec. (in)	Sample Blows (per 6 in.)	SPT Value	Sample Description and Identification (Modified Burmister Procedure)	Remarks	Field Test Data	Depth (ft.)	Stratum Description	Elev. (ft.)
35	24												
	18												
	19												
	20												
	28												
40	26												
	34												
	52												
	37												
	33												
45	34												
	54												
	46												
	55												
	50												
50	50												
	50/3"												
55													
60													

REMARKS

2 - Possible transition to Glacial Till at approximately 42.0' bml (El. -51.9').
3 - Probe refusal at 52.3' bml (El. -62.2').

See Log Key for exploration of sample description and identification procedures. Stratification lines represent approximate boundaries between soil and bedrock types. Actual transitions may be gradual. Water level readings have been made at the times and under the conditions stated. Fluctuations of groundwater may occur due to other factors than those present at the times the measurements were made.

Exploration No.: P-1

GZA TEMPLATE TEST BORING, 12/7/2015, 1:02:04 PM

2015 PROBE P-1

TEST BORING LOG

GZA GeoEnvironmental, Inc. *Engineers and Scientists*

University of New England
Marine Science Center Pier
Biddeford, Maine

EXPLORATION NO.: P-2
SHEET: 1 of 2
PROJECT NO: 09.0025897.00
REVIEWED BY:

Logged By: B Cardali
Drilling Co.: New England Boring
Foreman: Brad Enos

Type of Rig: Barge
Rig Model:
Drilling Method: Rod Probe

Boring Location: See Plan
Ground Surface Elev. (ft.): -7.3
Final Boring Depth (ft.): 54.2
Date Start - Finish: 11/10/2015 - 11/10/2015

H. Datum:
V. Datum: NAVD 88

Hammer Type: Safety
Hammer Weight (lb.): 300
Hammer Fall (in.): 24
Auger or Casing O.D./I.D Dia (in.):

Sampler Type:
Sampler O.D. (in.):
Sampler Length (in.):
Rock Core Size:

Groundwater Depth (ft.)

Date	Time	Water Depth	Stab. Time

Depth (ft.)	Casing Blows/ Core Rate	No.	Sample Depth (ft.)	Sample Pen. (in)	Sample Rec. (in)	Sample Blows (per 6 in.)	SPT Value	Sample Description and Identification (Modified Burmister Procedure)	Remarks	Field Test Data	Depth (ft.)	Stratum Description	Elev. (ft.)
0	1												
	1												
	1												
	3												
	6												
5	4												
	3												
	8												
	22												
	9												
10	5												
	2												
	3												
	3												
	5												
15	4												
	6												
	5												
	7												
20	5												
	10												
	13												
	19												
	18												
25	21												
	15												
	13												
	14												
	30												
30	29												
	26												

REMARKS

1 - Upon retrieval of probe rods, bottom 30' of rods was bent at an angle approximately 30-45 degrees off of the vertical indicating possible sloping rock at approximately 30.0' bml (El. 37.3').

See Log Key for exploration of sample description and identification procedures. Stratification lines represent approximate boundaries between soil and bedrock types. Actual transitions may be gradual. Water level readings have been made at the times and under the conditions stated. Fluctuations of groundwater may occur due to other factors than those present at the times the measurements were made.

Exploration No.: P-2

GZA TEMPLATE TEST BORING, 12/7/2015, 1:02:04 PM

TEST BORING LOG

GZA GeoEnvironmental, Inc. *Engineers and Scientists*

University of New England
Marine Science Center Pier
Biddeford, Maine

EXPLORATION NO.: P-2
SHEET: 2 of 2
PROJECT NO: 09.0025897.00
REVIEWED BY:

Logged By: B Cardali
Drilling Co.: New England Boring
Foreman: Brad Enos

Type of Rig: Barge
Rig Model:
Drilling Method: Rod Probe

Boring Location: See Plan
Ground Surface Elev. (ft.): -7.3
Final Boring Depth (ft.): 54.2
Date Start - Finish: 11/10/2015 - 11/10/2015

H. Datum:
V. Datum: NAVD 88

Hammer Type: Safety
Hammer Weight (lb.): 300
Hammer Fall (in.): 24
Auger or Casing O.D./I.D Dia (in.):

Sampler Type:
Sampler O.D. (in.):
Sampler Length (in.):
Rock Core Size:

Groundwater Depth (ft.)

Date	Time	Water Depth	Stab. Time

Depth (ft.)	Casing Blows/ Core Rate	No.	Sample Depth (ft.)	Sample Pen. (in)	Sample Rec. (in)	Sample Blows (per 6 in.)	SPT Value	Sample Description and Identification (Modified Burmister Procedure)	Remarks	Field Test Data	Depth (ft.)	Stratum Description	Elev. (ft.)
30	23								1				
	19												
	37												
	39												
	34												
35	42												
	31												
	40												
	36												
	41												
	38												
40	46												
	43												
	55												
	52												
	52												
45	40												
	37												
	38												
	41												
	65												
50	91												
	78												
	50												
	75												
	100/2"												
55									2				
											54.2		-61.5
60													

REMARKS

2 - Probe refusal at 54.2' bml (El. -61.5').

See Log Key for exploration of sample description and identification procedures. Stratification lines represent approximate boundaries between soil and bedrock types. Actual transitions may be gradual. Water level readings have been made at the times and under the conditions stated. Fluctuations of groundwater may occur due to other factors than those present at the times the measurements were made.

Exploration No.: P-2

GZA TEMPLATE TEST BORING, 12/7/2015, 1:02:04 PM

2015 PROBE P-2

ELEVATION	MLLW	NAVD88*
BFE	+19.0	+14.0
HAT	+11.6	+6.6
MHHW	+9.7	+4.7
MHW	+9.3	+4.3
MSL	+4.8	-0.2
MLW	+0.3	-4.7
MLLW	0.0	-5.0

*PROJECT DATUM

FOR PERMIT

Attention:
0 1"
If this scale bar does not measure 1" then drawing is not original scale.

STATE OF MAINE
BRIAN M. MCDEVITT
PE18260
LICENSED
PROFESSIONAL ENGINEER
6/9/2025

Designed:	DJB
Drawn:	JAM
Checked:	BJB
Approved:	BMM
P.E. No:	13033
GEI Project	2203703

GEI Consultants
GEI CONSULTANTS, INC.
5 MILK STREET
PORTLAND, ME 04101
(207)797-8901

UNIVERSITY OF NEW ENGLAND
11 HILLS BEACH RD.
BIDDEFORD, MAINE

UNIVERSITY OF NEW ENGLAND MARINE SCIENCE CENTER PIER

11 HILLS BEACH ROAD
BIDDEFORD, YORK COUNTY, MAINE

NO	DATE	ISSUE/REVISION	APP
8	6/5/2025	ADDRESS PB COMMENTS	DJB
7	4/16/2025	BIDDEFORD PERMIT APP.	DJB
6	9/17/2024	REVISED PERMIT SET	DJB
5	6/27/2024	REVISED PERMIT SET	DJB
4	9/14/2023	DEP PERMIT SET	DJB
3	6/28/2023	75% DESIGN SUBMISSION	DJB
2	2/15/2023	30% DESIGN SUBMISSION	DJB
1	12/9/2022	15% DESIGN SUB REV	DJB
0	11/11/2022	15% DESIGN SUBMISSION	DJB

SHEET NAME
BORING LOGS (SHEET 1 OF 3)

SHEET NO.
B-002

BORING INFORMATION
NORTHING (ft): 228,600 | EASTING (ft): 2,895,310
GROUND SURFACE EL. (ft): -10.1 | DATE START/END: 12/12/2022 - 12/13/2022
VERT./HORIZ. DATUMS: NAVD 88/NAD83 ME West Zone | DRILLING COMPANY: New England Boring
TOTAL DEPTH (ft): 70.0 | DRILLER NAME: B. Enos
LOGGED BY: K. Gleichauf | RIG TYPE: CME 21

BORING WB-1 — PAGE 1 of 3

DRILLING INFORMATION
HAMMER TYPE: Safety Hammer - rope and cathead | CASING I.D./O.D.: 4 inch/ 4.5 inch | CORE BARREL TYPE: NX
AUGER I.D./O.D.: NA / NA | DRILL ROD O.D.: NM | CORE BARREL I.D./O.D.: 1.8 inch / 3 inch
DRILLING METHOD: Drive and Wash/Open Hole
WATER LEVEL DEPTHS (ft): water boring

ABBREVIATIONS:
Pen. = Penetration Length; Rec. = Recovery Length; RQD = Rock Quality Designation (Sum of lengths of core pieces>4 in / Pen., %; WOH = Weight of Rods; WOH = Weight of Hammer
S = Split Spoon Sample; C = Core Sample; U = Undisturbed Sample; V = Vane Test; DP = Direct Push Sample; HSA = Hollow-Stem Auger
Qp = Pocket Penetrometer Strength; Sv = Pocket Torvane Shear Strength; LL = Liquid Limit; PL = Plastic Limit; PID = Photoionization Detector; I.D./O.D. = Inside Diameter/Outside Diameter
NA, NM = Not Applicable, Not Measured; Blows per 6 in. : 140-lb hammer falling 30 inches to drive a 2-inch-O.D. split spoon sampler.

Elev. (ft)	Depth (ft)	Sample No.	Sample Depth (ft)	Pen./ Rec. (in)	Blows per 6 in. or RQD	Drilling Remarks/ Field Test Data	Layer Name	Soil and Rock Description
	0	S1	0 to 2	24/2	WOR-WOH/18"		SAND/SILT	S1: NARROWLY GRADED GRAVEL WITH SAND (GP); ~80% coarse gravel (one piece), ~20% fine to coarse sand. Dark Gray.
	5	S2	5.5 to 7.5	24/9	5-3-4-6	Sand and shells in wash 0-5'.		S2: WIDELY GRADED SAND (SW); ~95% fine to coarse sand, ~5% nonplastic fines, gray. shells.
-20	10	S3	10.5 to 12.5	24/8	1-1-3-4	Sand and wood in wash 5.5-10.5'.		S3: WIDELY GRADED SAND (SW); Similar to S2.
	15	S4	15.5 to 17.5	24/9	3-4-2-WOH			S4: WIDELY GRADED SAND (SW); Similar to S2. pieces of wood.
-30	20	S5	20.5 to 22.5	24/24	2-1-1-2	Qp= 0.5 tsf (0-3') Sv= 2.5 tsf (0-3') Qp= 0.25 tsf (3-24") Sv= 1.5 tsf (3-24")	CLAY	S5: LEAN CLAY (CL); ~95% low plasticity fines, ~5% fine sand. Gray; Shells (0-10"). Sand seam at 20".

NOTES:
PROJECT NAME: UNE Marine Science Center Pier
CITY/STATE: Biddeford, Maine
GEI PROJECT NUMBER: 2203703

BORING WB-1 — PAGE 2 of 3

Elev. (ft)	Depth (ft)	Sample No.	Sample Depth (ft)	Pen./ Rec. (in)	Blows per 6 in. or RQD	Drilling Remarks/ Field Test Data	Layer Name	Soil and Rock Description
-40	30	S6	25.5 to 27.5	24/24	WOR-WOH/18"	Drove 4" casing to 25.5'. Drilled open hole 25.5-45.5'. Drove casing with 3" casing from 45.5' to top of rock. Qp= 0.25 tsf Sv= 1.5 tsf	CLAY	S6: LEAN CLAY (CL); ~95% low plasticity fines, ~5% fine sand. Gray.
		S7	30.5 to 32.5	24/24	WOR/18"-2	Qp= 0.25 tsf Sv= 1.5 tsf		S7: LEAN CLAY (CL); Similar to S6.
-50	40	S8	35.5 to 37.5	24/24	WOR/18"-WOH	Qp= 0.25 tsf Sv= 1.5 tsf		S8: LEAN CLAY (CL); Similar to S6.
		S9	40.5 to 42.5	24/24	WOR/18"-WOH	Qp= 0.25 tsf Sv= 1.5 tsf		S9: LEAN CLAY (CL); Similar to S6.
-60	50	S10	45.5 to 47.5	24/24	WOR/18"-3	Qp= 0.5 tsf Sv= 1.5 tsf		S10: SANDY LEAN CLAY (CL); ~70% low plasticity fines, ~30% fine sand. Gray. Layered sand and clay.
						Casing hard driving starting at 49.7'.	TILL	
	55	S11	50.5 to 52.5	24/4	14-14-16-22			S11: CLAYEY GRAVEL WITH SAND (GC); ~50% fine to coarse gravel, ~30% fine to coarse sand, ~20% low plasticity fines. Gray.

NOTES:
PROJECT NAME: UNE Marine Science Center Pier
CITY/STATE: Biddeford, Maine
GEI PROJECT NUMBER: 2203703

BORING WB-1 — PAGE 3 of 3

Elev. (ft)	Depth (ft)	Sample No.	Sample Depth (ft)	Pen./ Rec. (in)	Blows per 6 in. or RQD	Drilling Remarks/ Field Test Data	Layer Name	Soil and Rock Description
-70	60	S12	55.5 to 57.4	11/6	37-50/5"		TILL	S11: WIDELY GRADED GRAVEL WITH SAND AND CLAY (GW-GC); ~60% fine to coarse gravel, ~30% fine to coarse sand, ~10% low plasticity fines. Gray.
		C1	57.4 to 59.3	35/35	0	Core Times (min/ft): 4-6-6/0.9' C1 jammed at 2.9'.	ROCK	C1: GNEISS, Dark Gray with white banding, hard to med. hard. Slightly weathered (0-24"), highly weathered (24-35"). Joints at 75 to 90 degrees. Highly fractured.
	65	C2	59.3 to 60.8	18/18	0	Core Times (min/ft): 4/0.5'-1/0.5'-4/0.5' C2 jammed at 0.5, 1.5'.		C2: GNEISS. Similar to C1. Highly weathered (0-10"), moderately weathered (10-18"), dissolved quartz bands.
		C3	60.8 to 65.8	60/60	71	Core Times (min/ft): 7/1.2'-2/0.8'-4-4/0.7'-2/0.3'-6 C3 jammed at 1.2, 3.7'.		C3: GNEISS, hard. Fresh throughout. joints spaced 1-19" at 0 to 60 degrees.
-80	70	C4	65.8 to 70	50/36	24	Core Times (min/ft): 6-5-5-3/1.2'		C4: GNEISS. Fresh (0-12"). Moderately weathered and highly fractured (12-36").
	75							Bottom of boring at depth 70 ft.
-90	80							
	85							

NOTES:
PROJECT NAME: UNE Marine Science Center Pier
CITY/STATE: Biddeford, Maine
GEI PROJECT NUMBER: 2203703

2022 BORING WB-1

BORING INFORMATION
NORTHING (ft): 228,619 | EASTING (ft): 2,895,396
GROUND SURFACE EL. (ft): -11.6 | DATE START/END: 12/7/2022 - 12/8/2022
VERT./HORIZ. DATUMS: NAVD 88/NAD83 ME West Zone | DRILLING COMPANY: New England Boring
TOTAL DEPTH (ft): 68.4 | DRILLER NAME: B. Enos
LOGGED BY: K. Gleichauf | RIG TYPE: CME 21

BORING WB-2 — PAGE 1 of 3

DRILLING INFORMATION
HAMMER TYPE: Safety Hammer - rope and cathead | CASING I.D./O.D.: 4 inch/ 4.5 inch | CORE BARREL TYPE: NX
AUGER I.D./O.D.: NA / NA | DRILL ROD O.D.: NM | CORE BARREL I.D./O.D.: 1.8 inch / 3 inch
DRILLING METHOD: Drive and Wash/Open Hole
WATER LEVEL DEPTHS (ft): water boring

ABBREVIATIONS:
Pen. = Penetration Length; Rec. = Recovery Length; RQD = Rock Quality Designation (Sum of lengths of core pieces>4 in / Pen., %; WOH = Weight of Rods; WOH = Weight of Hammer
S = Split Spoon Sample; C = Core Sample; U = Undisturbed Sample; V = Vane Test; DP = Direct Push Sample; HSA = Hollow-Stem Auger
Qp = Pocket Penetrometer Strength; Sv = Pocket Torvane Shear Strength; LL = Liquid Limit; PL = Plastic Limit; PID = Photoionization Detector; I.D./O.D. = Inside Diameter/Outside Diameter
NA, NM = Not Applicable, Not Measured; Blows per 6 in. : 140-lb hammer falling 30 inches to drive a 2-inch-O.D. split spoon sampler.

Elev. (ft)	Depth (ft)	Sample No.	Sample Depth (ft)	Pen./ Rec. (in)	Blows per 6 in. or RQD	Drilling Remarks/ Field Test Data	Layer Name	Soil and Rock Description
	0	S1	0 to 2	24/0	WOH/12"-2-2		SAND/SILT	S1: No recovery. Redrove 3" spoon. S1 (redrive): WIDELY GRADED SAND (SW); ~95% fine to coarse sand, ~5% nonplastic fines. Gray. Shells.
	5	S2	4 to 6	24/5	6-4-4-9			S2: WIDELY GRADED SAND (SW); Similar to S1.
-20	10	S3	9 to 11	24/0	1-2-3-4			S3: No recovery. Redrove 3" spoon. S3 (redrive): No recovery. Probable loose sand. Split spoon returned clean. Sand and shells in wash.
	15	S4	14 to 16	24/0	1-2-2-3			S4: No Recovery. Redrove 3" spoon. S4 (redrive): NARROWLY GRADED GRAVEL (GP); ~100% coarse gravel. Probable wash material, gravel is clean.
-30	20	S5	19 to 21	24/11	10-7-6-28			S5: SANDY SILT (ML); ~ 60% nonplastic fines, ~40% fine sand. Gray. Traces of wood. Organic odor.
						Clay in wash. Driller noted reduced resistance.	CLAY	

NOTES:
PROJECT NAME: UNE Marine Science Center Pier
CITY/STATE: Biddeford, Maine
GEI PROJECT NUMBER: 2203703

BORING WB-2 — PAGE 2 of 3

Elev. (ft)	Depth (ft)	Sample No.	Sample Depth (ft)	Pen./ Rec. (in)	Blows per 6 in. or RQD	Drilling Remarks/ Field Test Data	Layer Name	Soil and Rock Description
-40	25	S6	24 to 26	24/24	WOH/18"-1	Qp=0.25 tsf Sv=0.05 tsf	CLAY	S6: LEAN CLAY (CL); ~100% low plasticity fines. Gray.
	30	S7	29 to 31	24/24	WOR-WOH/12"-3	Qp=0.25 tsf Sv=0.05 tsf		S7: LEAN CLAY (CL); ~95% low plasticity fines, ~5% fine sand. Gray. Sand seam in tip.
-50	35	S8	34 to 36	24/24	WOH/12"-WOH/12"	Drove 4" casing to 32'. Drilled open hole 32-44'. Drilled with 3" casing 44' to top of rock. Qp=0.25 tsf Sv=0.05 tsf		S8: LEAN CLAY (CL); Similar to S7.
	40	S9	39 to 41	24/24	WOH/12"-3-3			S9 (0-6"): SANDY SILT (ML); ~60% nonplastic fines, ~40% fine sand. Gray. S9 (6-13"): LEAN CLAY (CL): Similar to S8. S9 (13-19"): SANDY SILT (ML): Similar to (0-9"). S9 (19-24") LEAN CLAY (CL): Similar to S8.
-60	45	S10	44 to 46	24/16	10-14-8-5		TILL	S10: SILTY SAND (SM); ~75% fine sand, ~25% nonplastic fines. Gray. More silt (0-8") more sand (8-16").
	50	S11	49 to 51	24/22	6-10-13-33			S11: NARROWLY GRADED SAND with Silt (SP-SM); ~90% fine sand, ~10% nonplastic fines. Gray (0-10"), Gray/brown (10-22"). One piece of gravel at 18".
	55	S12	54 to 56	24/15	10-7-10-18			S12: NARROWLY GRADED SAND with Silt (SP-SM); Similar to S11. Gravel seam (3-5").

NOTES:
PROJECT NAME: UNE Marine Science Center Pier
CITY/STATE: Biddeford, Maine
GEI PROJECT NUMBER: 2203703

BORING WB-2 — PAGE 3 of 3

Elev. (ft)	Depth (ft)	Sample No.	Sample Depth (ft)	Pen./ Rec. (in)	Blows per 6 in. or RQD	Drilling Remarks/ Field Test Data	Layer Name	Soil and Rock Description
-70	60						TILL	
		C1	59 to 63.8	57/57	17	Core Times (min/ft): 2-2-2/0.7'-1/0.3'-4-5/0.6' C1 jammed at 2.7, 4.6'.	ROCK	C1: GNEISS, hard, dark gray with white banding. Highly weathered (0-19"), slightly weathered (19-57"), joints spaced 0 to 5" at 30 to 75 degrees. weathering occurs in quartzy seams.
	65	C2	63.8 to 68.4	55/55	13	Core Times (min/ft): 2-2-1/0.6'-2-5 C2 jammed at 2.6, 4.6'.		C2: GNEISS. Similar to C1. Slightly weathered (0-22"), highly weathered (22-31"), slightly weathered (31-55"). Weathering in quartz bands.
-80	70							Bottom of boring at depth 68.4 ft.
	75							
-90	80							
	85							

NOTES:
PROJECT NAME: UNE Marine Science Center Pier
CITY/STATE: Biddeford, Maine
GEI PROJECT NUMBER: 2203703

2022 BORING WB-2

ELEVATION	MLLW	NAVD88*
BFE	+19.0	+14.0
HAT	+11.6	+6.6
MHHW	+9.7	+4.7
MHW	+9.3	+4.3
MSL	+4.8	-0.2
MLW	+0.3	-4.7
MLLW	0.0	-5.0

*PROJECT DATUM

Attention:
0 1"
If this scale bar does not measure 1" then drawing is not original scale.

STATE OF MAINE — BRIAN M. MCDEVITT — PE18260 — LICENSED — PROFESSIONAL ENGINEER
6/9/2025

Designed:	DJB
Drawn:	JAM
Checked:	BJB
Approved:	BMM
P.E. No:	13033
GEI Project	2203703

GEI Consultants
GEI CONSULTANTS, INC.
5 MILK STREET
PORTLAND, ME 04101
(207)797-8901

UNIVERSITY OF NEW ENGLAND
11 HILLS BEACH RD.
BIDDEFORD, MAINE

UNIVERSITY OF NEW ENGLAND MARINE SCIENCE CENTER PIER
11 HILLS BEACH ROAD
BIDDEFORD, YORK COUNTY, MAINE

NO	DATE	ISSUE/REVISION	APP
8	6/5/2025	ADDRESS PB COMMENTS	DJB
7	4/16/2025	BIDDEFORD PERMIT APP.	DJB
6	9/17/2024	REVISED PERMIT SET	DJB
5	6/27/2024	REVISED PERMIT SET	DJB
4	9/14/2023	DEP PERMIT SET	DJB
3	6/28/2023	75% DESIGN SUBMISSION	DJB
2	2/15/2023	30% DESIGN SUBMISSION	DJB
1	12/9/2022	15% DESIGN SUB REV	DJB
0	11/11/2022	15% DESIGN SUBMISSION	DJB

SHEET NAME
BORING LOGS (SHEET 2 OF 3)

SHEET NO.
B-003

FOR PERMIT

DJCASTELNUOVO, VINNIE \\geiconsultants.com\data\Data_Storage\Working\UNIVERSITY OF NEW ENGLAND\2203703 UNE Marine Science Center Pier\00_CAD\Design\Sheets\2203703-B-003.dwg - 6/6/2025

DICASTELNUOVO, VINNIE \\geiconsultants.com\data\Data_Storage\Working\UNIVERSITY OF NEW ENGLAND\2203703 UNE Marine Science Center Pier\00_CAD\Design\Sheets\2203703-B-004.dwg - 6/6/2025

BORING WB-3 — PAGE 1 of 3

BORING INFORMATION
NORTHING (ft): 228,591 | EASTING (ft): 2,895,359
GROUND SURFACE EL. (ft): -10.2 | DATE START/END: 12/9/2022 - 12/9/2022
VERT./HORIZ. DATUMS: NAVD 88/NAD83 ME West Zone | DRILLING COMPANY: New England Boring
TOTAL DEPTH (ft): 63.4 | DRILLER NAME: B. Enos
LOGGED BY: K. Gleichauf | RIG TYPE: CME 21

DRILLING INFORMATION
HAMMER TYPE: Safety Hammer - rope and cathead | CASING I.D./O.D.: 4 inch/ 4.5 inch | CORE BARREL TYPE: NX
AUGER I.D./O.D.: NA / NA | DRILL ROD O.D.: NM | CORE BARREL I.D./O.D.: 1.8 inch / 3 inch
DRILLING METHOD: Drive and Wash/Open Hole
WATER LEVEL DEPTHS (ft): water boring

ABBREVIATIONS: Pen. = Penetration Length; Rec. = Recovery Length; RQD = Rock Quality Designation = Length of Sound Cores>4 in / Pen.,%; WOR = Weight of Rods; WOH = Weight of Hammer; S = Split Spoon Sample; C = Core Sample; U = Undisturbed Sample; SC = Sonic Core; DP = Direct Push Sample; HSA = Hollow-Stem Auger; Qp = Pocket Penetrometer Strength; Sv = Pocket Torvane Shear Strength; LL = Liquid Limit; PI = Plasticity Index; PID = Photoionization Detector; I.D./O.D.= Inside Diameter/Outside Diameter; NA, NM = Not Applicable, Not Measured; Blows per 6 in.: 140-lb hammer falling 30 inches to drive a 2-inch-O.D. split spoon sampler.

Sample No.	Depth (ft)	Pen./ Rec. (in)	Blows per 6 in. or RQD	Drilling Remarks/ Field Test Data	Layer Name	Soil and Rock Description
S1	0 to 2	24/5	WOH/18"-1		SAND/SILT	S1: SILTY SAND (SM); ~80% fine to coarse sand, ~20% nonplastic/organic fines. Gray. wood. organic odor.
S2	3 to 5	24/9	2-1-2-3		SAND/SILT	S2: WIDELY GRADED SAND (SW); ~100% fine to coarse sand. Gray. organic odor.
S3	8 to 10	24/12	1-2-3-4		SAND/SILT	S3: WIDELY GRADED SAND (SW); Similar to S2. Shells.
S4	13 to 15	24/7	1-2-3-6		SAND/SILT	S4: NARROWLY GRADED SAND (SP); ~100% coarse sand. Gray. shells.
S5	18 to 20	24/12	9-4-8-8		SAND/SILT	S5: SILTY SAND (SM); ~65% fine sand, ~25% nonplastic fines, ~10% fine to coarse gravel. wood. shells.
				clay in wash at 22'.		
S6	23 to	24/24	WOR-	Qp<0.25 tsf Sv=0.05 tsf	CLAY	S6: LEAN CLAY (CL); ~95% low plasticity fines, ~5% fine sand. Gray. Sand seams (8-9"), (19-20").

NOTES:
PROJECT NAME: UNE Marine Science Center Pier
CITY/STATE: Biddeford, Maine
GEI PROJECT NUMBER: 2203703
GEI Consultants

GEI WOBURN STD 5-NORTH-EAST-LAYER NAME 2203703 UNE PIER TYPED LOGS.GPJ 1/19/23

BORING WB-3 — PAGE 2 of 3

NORTHING (ft): 228,591 | EASTING (ft): 2,895,359
GROUND SURFACE EL. (ft): -10.2 | DATE START/END: 12/9/2022 - 12/9/2022
VERT./HORIZ. DATUMS: NAVD 88/NAD83 ME West Zone | DRILLING COMPANY: New England Boring

Sample No.	Depth (ft)	Pen./ Rec. (in)	Blows per 6 in. or RQD	Drilling Remarks/ Field Test Data	Layer Name	Soil and Rock Description
	25		1/12"-1		CLAY	
S7	28 to 30	24/24	WOR/12"-WOH-1	drove 4" casing to 28'. Drilled open hole 28-48. Drilled with 3" casing 48' to top of rock.Qp<0.25 tsf Sv=0.05 tsf	CLAY	S7: LEAN CLAY (CL); Similar to S6.
S8	33 to 35	24/24	WOR/12"-WOH-2	Qp<0.25 tsf Sv=0.05 tsf	CLAY	S8: LEAN CLAY (CL) Similar to S6.
S9	38 to 40	24/24	WOR/12"-WOH-2	Qp<0.25 tsf Sv=0.05 tsf	CLAY	S9: LEAN CLAY (CL); Similar to S6. Fine sand seams (6-8"), (20-24").
S10	43 to 45	24/24	WOR-1/12"-4		CLAY	S10 (0-6"): LEAN CLAY (CL); Similar to S6. S10(6-24"): CLAYEY SAND (SC); ~75% fine sand, ~25% low plasticity fines. Gray. Brown (20-24").
S11	48 to 50	24/5	45-29-14-15		TILL	S11: CLAYEY SAND with Gravel (SC); ~50% fine sand, ~30% fine to coarse gravel up to 1.25", ~20% low plasticity fines. Gray.
S12	53 to 53.3	4/4	50/4"	casing refusal at 53.3'.Core Times (min/ft): 4-2/0.2' C1 jammed at 1.2'.	TILL	S12: NARROWLY GRADED GRAVEL with Sand (GP); ~75% coarse gravel, ~20% fine to coarse sand, ~5% nonplastic fines. Gray/Brown.
C1	53.3	15/15	33		ROCK	C1: GNEISS, hard, dark gray. Slightly weathered. joints spaced 0-5" at 60 to 90 degrees.
C2	53.3 to	60/57	88		ROCK	

NOTES:
PROJECT NAME: UNE Marine Science Center Pier
CITY/STATE: Biddeford, Maine
GEI PROJECT NUMBER: 2203703
GEI Consultants

GEI WOBURN STD 5-NORTH-EAST-LAYER NAME 2203703 UNE PIER TYPED LOGS.GPJ 1/19/23

BORING WB-3 — PAGE 3 of 3

NORTHING (ft): 228,591 | EASTING (ft): 2,895,359
GROUND SURFACE EL. (ft): -10.2 | DATE START/END: 12/9/2022 - 12/9/2022
VERT./HORIZ. DATUMS: NAVD 88/NAD83 ME West Zone | DRILLING COMPANY: New England Boring

Sample No.	Depth (ft)	Pen./ Rec. (in)	Blows per 6 in. or RQD	Drilling Remarks/ Field Test Data	Layer Name	Soil and Rock Description
	54.6 / 54.6 to 59.6			Core Times (min/ft): 2-2-3-3-4	ROCK	C2: GNEISS, hard, dark gray with white banding. fresh throughout. joints spaced 3-12" at 60 degrees. calcite seam horizontal at 48".
C3	59.6 to 63.4	45/48	31	Core Times (min/ft):2-3-2/0.2'-3-2/0.6' C3 jammed at 2.2'.	ROCK	C3: GNEISS, hard, dark gray. fresh throughout. joints spaced 1-5" at 60 degrees. Horizontal calcite seam at 15". Highly fractured (23-25").
						Bottom of boring at depth 63.4 ft.

NOTES:
PROJECT NAME: UNE Marine Science Center Pier
CITY/STATE: Biddeford, Maine
GEI PROJECT NUMBER: 2203703
GEI Consultants

GEI WOBURN STD 5-NORTH-EAST-LAYER NAME 2203703 UNE PIER TYPED LOGS.GPJ 1/19/23

2022 BORING WB-3

BORING WB-4 — PAGE 1 of 2

BORING INFORMATION
NORTHING (ft): 228,566 | EASTING (ft): 2,895,422
GROUND SURFACE EL. (ft): -8.3 | DATE START/END: 12/6/2022 - 12/6/2022
VERT./HORIZ. DATUMS: NAVD 88/NAD83 ME West Zone | DRILLING COMPANY: New England Boring
TOTAL DEPTH (ft): 46.7 | DRILLER NAME: B. Enos
LOGGED BY: K. Gleichauf | RIG TYPE: CME 21

DRILLING INFORMATION
HAMMER TYPE: Safety Hammer - rope and cathead | CASING I.D./O.D.: 4 inch/ 4.5 inch | CORE BARREL TYPE: NX
AUGER I.D./O.D.: NA / NA | DRILL ROD O.D.: NM | CORE BARREL I.D./O.D.: 1.8 inch / 3 inch
DRILLING METHOD: Drive and Wash/Open Hole
WATER LEVEL DEPTHS (ft): water boring

ABBREVIATIONS: Pen. = Penetration Length; Rec. = Recovery Length; RQD = Rock Quality Designation = Length of Sound Cores>4 in / Pen.,%; WOR = Weight of Rods; WOH = Weight of Hammer; S = Split Spoon Sample; C = Core Sample; U = Undisturbed Sample; SC = Sonic Core; DP = Direct Push Sample; HSA = Hollow-Stem Auger; Qp = Pocket Penetrometer Strength; Sv = Pocket Torvane Shear Strength; LL = Liquid Limit; PI = Plasticity Index; PID = Photoionization Detector; I.D./O.D.= Inside Diameter/Outside Diameter; NA, NM = Not Applicable, Not Measured; Blows per 6 in.: 140-lb hammer falling 30 inches to drive a 2-inch-O.D. split spoon sampler.

Sample No.	Depth (ft)	Pen./ Rec. (in)	Blows per 6 in. or RQD	Drilling Remarks/ Field Test Data	Layer Name	Soil and Rock Description
S1	0 to 2	24/4	WOR/12"-WOH/12"		SAND/SILT	S1: SILTY SAND (SM); ~60% fine to coarse sand, ~35% organic fines, ~5% fine gravel. Gray. Shells. Wood. Organic odor.
S2	5 to 7	24/4	1-1-1/12"		SAND/SILT	S2: SILTY SAND (SM); Similar to S1.
				Casing increased resistance at 7.5'.	SAND/SILT	
S3	10 to 12	24/15	9-4-1/12"		SAND/SILT	S3: SANDY SILT (ML); ~60% nonplastic fines, ~40% fine to coarse sand. Gray. Shells. (0-7") mostly fine sand, (7-15") fine to coarse sand. Organic odor.
S4	15 to 17	24/0	WOH-1/12"-1		SAND/SILT	S4: No recovery. Redrove 3" spoon. S4 (redrive): SANDY SILT (ML); Similar to S3. One ~2.5" piece of gravel on top. Wood. Shells.
S5	20 to 22	24/24	1/24"	Qp<0.25 tsf Sv=0.05 tsf	CLAY	S5: LEAN CLAY (CL); ~95% low plasticity fines, ~5% fine sand. Gray.

NOTES:
PROJECT NAME: UNE Marine Science Center Pier
CITY/STATE: Biddeford, Maine
GEI PROJECT NUMBER: 2203703
GEI Consultants

GEI WOBURN STD 5-NORTH-EAST-LAYER NAME 2203703 UNE PIER TYPED LOGS.GPJ 1/19/23

BORING WB-4 — PAGE 2 of 2

NORTHING (ft): 228,566 | EASTING (ft): 2,895,422
GROUND SURFACE EL. (ft): -8.3 | DATE START/END: 12/6/2022 - 12/6/2022
VERT./HORIZ. DATUMS: NAVD 88/NAD83 ME West Zone | DRILLING COMPANY: New England Boring

Sample No.	Depth (ft)	Pen./ Rec. (in)	Blows per 6 in. or RQD	Drilling Remarks/ Field Test Data	Layer Name	Soil and Rock Description
S6	25 to 27	24/4	1-1-2-4	Qp<0.25 tsf Sv=0.05 tsf	CLAY	S6: LEAN CLAY (CL); Similar to S5.
S7	30 to 32	24/24	5-2-2-1	Qp<0.25 tsf Sv=0.05 tsf	CLAY	S7: LEAN CLAY (CL); Similar to S5. Some gravel seams.
S8	35 to 36.7	20/9	WOR/18"-50/2"	Qp<0.25 tsf Sv=0.05 tsf	CLAY	S8: LEAN CLAY (CL); Similar to S5.
C1	36.7 to 39.7	36/31	14	Core Times (min/ft): 4-6-6 C1 jammed at 3'.	ROCK	C1: GNEISS, hard, dark gray/green. Slightly weathered. Joints spaced 0-5" at 0-90 degrees.
C2	39.7 to 42.4	32/37	94	Core Times (min/ft): 3-6-4/0.7'	ROCK	C2: GNEISS. Similar to C1. Joints spaced 1-18".
C3	42.4 to 43.2	9/9	0	Core Times (min/ft): 5/0.7'	ROCK	C3: GNEISS. Similar to C1. Highly fractured.
C4	43.1 to 44.7	19/19	26	Core Times (min/ft): 5-5/0.6'	ROCK	C4: GNEISS, hard, dark gray/black with white banding. Slightly weathered. Joints spaced 0-5" at 75 degrees.
C5	44.7 to 46.7	24/24	38	Core Times (min/ft): 5-8	ROCK	C5: GNEISS. Similar to C4.
						Bottom of boring at depth 46.7 ft.

NOTES:
PROJECT NAME: UNE Marine Science Center Pier
CITY/STATE: Biddeford, Maine
GEI PROJECT NUMBER: 2203703
GEI Consultants

GEI WOBURN STD 5-NORTH-EAST-LAYER NAME 2203703 UNE PIER TYPED LOGS.GPJ 1/19/23

2022 BORING WB-4

BORING LB-1 — PAGE 1 of 1

BORING INFORMATION
LOCATION: Proposed Pier Near Shore
GROUND SURFACE EL. (ft): NM | DATE START/END: 3/9/2023 - 3/9/2023
VERTICAL DATUM: | DRILLING COMPANY: New England Boring
TOTAL DEPTH (ft): 8.5 | DRILLER NAME: Mike M.
LOGGED BY: D. Pelletier | RIG TYPE: M1 ATV

DRILLING INFORMATION
HAMMER TYPE: Manual | CASING I.D./O.D.: 4 inch / NA | CORE BARREL TYPE:
AUGER I.D./O.D.: NA / NA | DRILL ROD O.D.: NM | CORE BARREL I.D./O.D. NA / NA
DRILLING METHOD: Drive and Wash
WATER LEVEL DEPTHS (ft): Not measured

ABBREVIATIONS: Pen. = Penetration Length; Rec. = Recovery Length; RQD = Rock Quality Designation = Length of Sound Cores>4 in / Pen.,%; WOR = Weight of Rods; WOH = Weight of Hammer; S = Split Spoon Sample; C = Core Sample; U = Undisturbed Sample; SC = Sonic Core; DP = Direct Push Sample; HSA = Hollow-Stem Auger; Qp = Pocket Penetrometer Strength; Sv = Pocket Torvane Shear Strength; LL = Liquid Limit; PI = Plasticity Index; PID = Photoionization Detector; I.D./O.D. = Inside Diameter/Outside Diameter; NA, NM = Not Applicable, Not Measured; Blows per 6 in.: 140-lb hammer falling 30 inches to drive a 2-inch-O.D. split spoon sampler.

Sample No.	Depth (ft)	Pen./ Rec. (in)	Blows per 6 in. or RQD	Drilling Remarks/ Field Test Data	Layer Name	Soil and Rock Description
S1	0 to 2	24/4	3-3-5-13			S1: SANDY ORGANIC SOIL (OL), 60% nonplastic fines, 40% fine sand, dark brown, organic topsoil.
S2	2 to 2.2	2/2	50/0.25	Ledge at 2.2 ft. Switch to Drive and Wash. Rollerbit to 3 ft.		S2: WIDELY GRADED GRAVEL WITH SAND (GP), 85% angular gravel, 10% fine to coarse sand, 5% nonplastic fines, dark gray (WEATHERED BEDROCK).
C1	3 to 7	48/40	10			C1: GNEISS, hard, metamorphic, fine-grained, joints slightly to moderately weathered, close, some cavaties throughout, gray. RQD 10% MPF 10-11-12-15
C2	7 to 8.5	18/16	50			C2: GNEISS, hard, metamorphic, fine-grained, joints slightly to moderately weathered, very close except 0-9 inches one piece, gray. RQD 50% MPF 18-11
						Finished hole at 5.5 ft. coring (8.5 ft. depth) due to time constraints.

NOTES:
PROJECT NAME: UNE Marine Science Center Pier
CITY/STATE: Biddeford, ME
GEI PROJECT NUMBER: 2203703
GEI Consultants

GEI WOBURN STD 1-LOCATION-LAYER NAME UNE BORING LOGS.GPJ 4/3/23

2023 BORING LB-1

BORING LB-3 — PAGE 1 of 1

BORING INFORMATION
LOCATION: Near Stairway
GROUND SURFACE EL. (ft): NM | DATE START/END: 3/9/2023 - 3/9/2023
VERTICAL DATUM: | DRILLING COMPANY: New England Boring
TOTAL DEPTH (ft): 1.2 | DRILLER NAME: Mike M.
LOGGED BY: D. Pelletier | RIG TYPE: M1 ATV

DRILLING INFORMATION
HAMMER TYPE: Manual | CASING I.D./O.D.: 4 inch / NA | CORE BARREL TYPE:
AUGER I.D./O.D.: NA / NA | DRILL ROD O.D.: NM | CORE BARREL I.D./O.D. NA / NA
DRILLING METHOD: Drive and Wash
WATER LEVEL DEPTHS (ft): Not measured

ABBREVIATIONS: Pen. = Penetration Length; Rec. = Recovery Length; RQD = Rock Quality Designation = Length of Sound Cores>4 in / Pen.,%; WOR = Weight of Rods; WOH = Weight of Hammer; S = Split Spoon Sample; C = Core Sample; U = Undisturbed Sample; SC = Sonic Core; DP = Direct Push Sample; HSA = Hollow-Stem Auger; Qp = Pocket Penetrometer Strength; Sv = Pocket Torvane Shear Strength; LL = Liquid Limit; PI = Plasticity Index; PID = Photoionization Detector; I.D./O.D. = Inside Diameter/Outside Diameter; NA, NM = Not Applicable, Not Measured; Blows per 6 in.: 140-lb hammer falling 30 inches to drive a 2-inch-O.D. split spoon sampler.

Sample No.	Depth (ft)	Pen./ Rec. (in)	Blows per 6 in. or RQD	Drilling Remarks/ Field Test Data	Layer Name	Soil and Rock Description
S1	0 to 1.2	14/6	2-8-50/2"			S1: SANDY ORGANIC SOIL (OL), 60% nonplastic fines, 40% fine sand, dark brown, organic topsoil.
						Bottom of boring at depth 1.2 ft.

NOTES:
PROJECT NAME: UNE Marine Science Center Pier
CITY/STATE: Biddeford, ME
GEI PROJECT NUMBER: 2203703
GEI Consultants

GEI WOBURN STD 1-LOCATION-LAYER NAME UNE BORING LOGS.GPJ 4/3/23

2023 BORING LB-3

FOR PERMIT

ELEVATION	MLLW	NAVD88*
BFE	+19.0	+14.0
HAT	+11.6	+6.6
MHHW	+9.7	+4.7
MHW	+9.3	+4.3
MSL	+4.8	-0.2
MLW	+0.3	-4.7
MLLW	0.0	-5.0

*PROJECT DATUM

Attention: 0 — 1" If this scale bar does not measure 1" then drawing is not original scale.

STATE OF MAINE — BRIAN M. MCDEVITT — PE18260 — LICENSED PROFESSIONAL ENGINEER — 6/9/2025

Designed:	DJB
Drawn:	JAM
Checked:	BJB
Approved:	BMM
P.E. No:	13033
GEI Project	2203703

GEI Consultants
GEI CONSULTANTS, INC.
5 MILK STREET
PORTLAND, ME 04101
(207)797-8901

UNE — UNIVERSITY OF NEW ENGLAND
11 HILLS BEACH RD.
BIDDEFORD, MAINE

UNIVERSITY OF NEW ENGLAND MARINE SCIENCE CENTER PIER

11 HILLS BEACH ROAD
BIDDEFORD, YORK COUNTY, MAINE

NO	DATE	ISSUE/REVISION	APP
8	6/5/2025	ADDRESS PB COMMENTS	DJB
7	4/16/2025	BIDDEFORD PERMIT APP.	DJB
6	9/17/2024	REVISED PERMIT SET	DJB
5	6/27/2024	REVISED PERMIT SET	DJB
4	9/14/2023	DEP PERMIT SET	DJB
3	6/28/2023	75% DESIGN SUBMISSION	DJB
2	2/15/2023	30% DESIGN SUBMISSION	DJB
1	12/9/2022	15% DESIGN SUB REV	DJB
0	11/11/2022	15% DESIGN SUBMISSION	DJB

SHEET NAME: **BORING LOGS (SHEET 3 OF 3)**

SHEET NO.: **B-004**

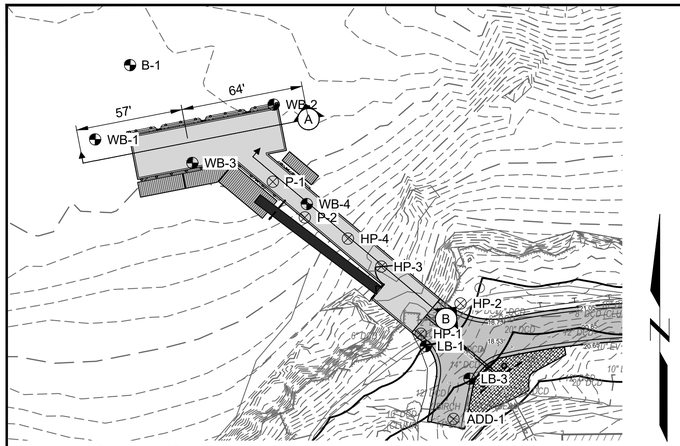

KEY PLAN

SCALE: 1" = 40'

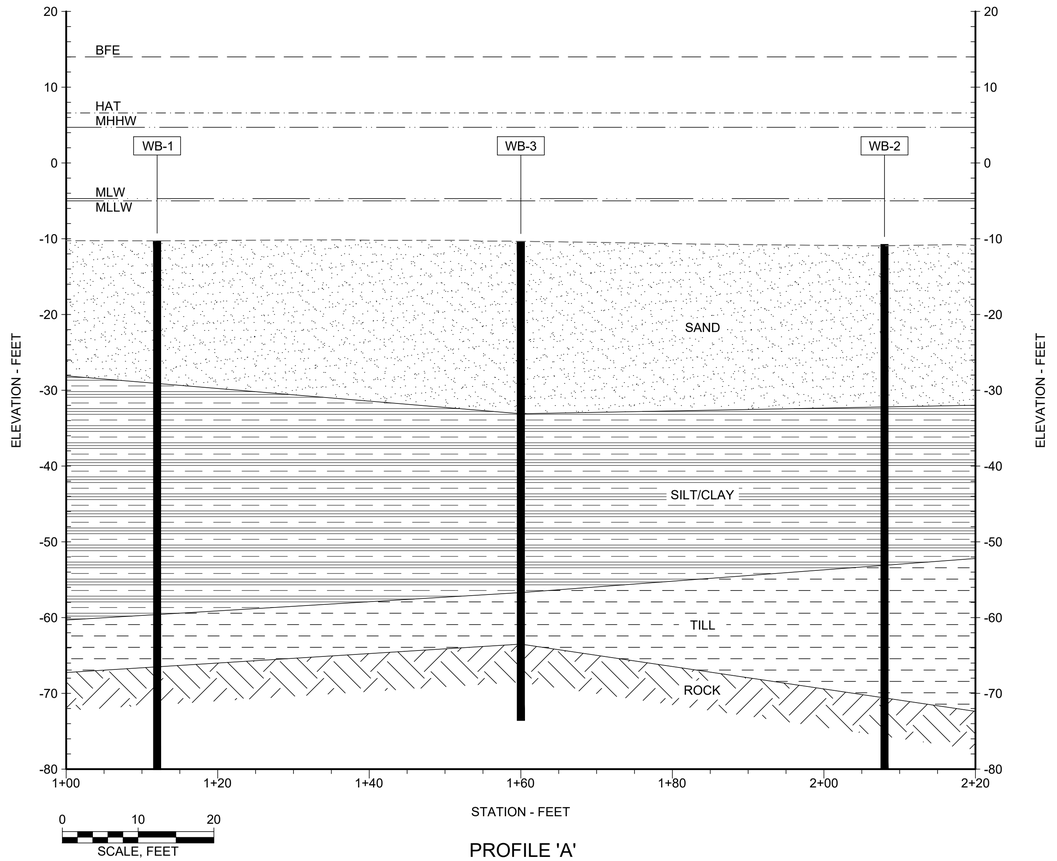

PROFILE 'A'

SCALE: 1" = 10'

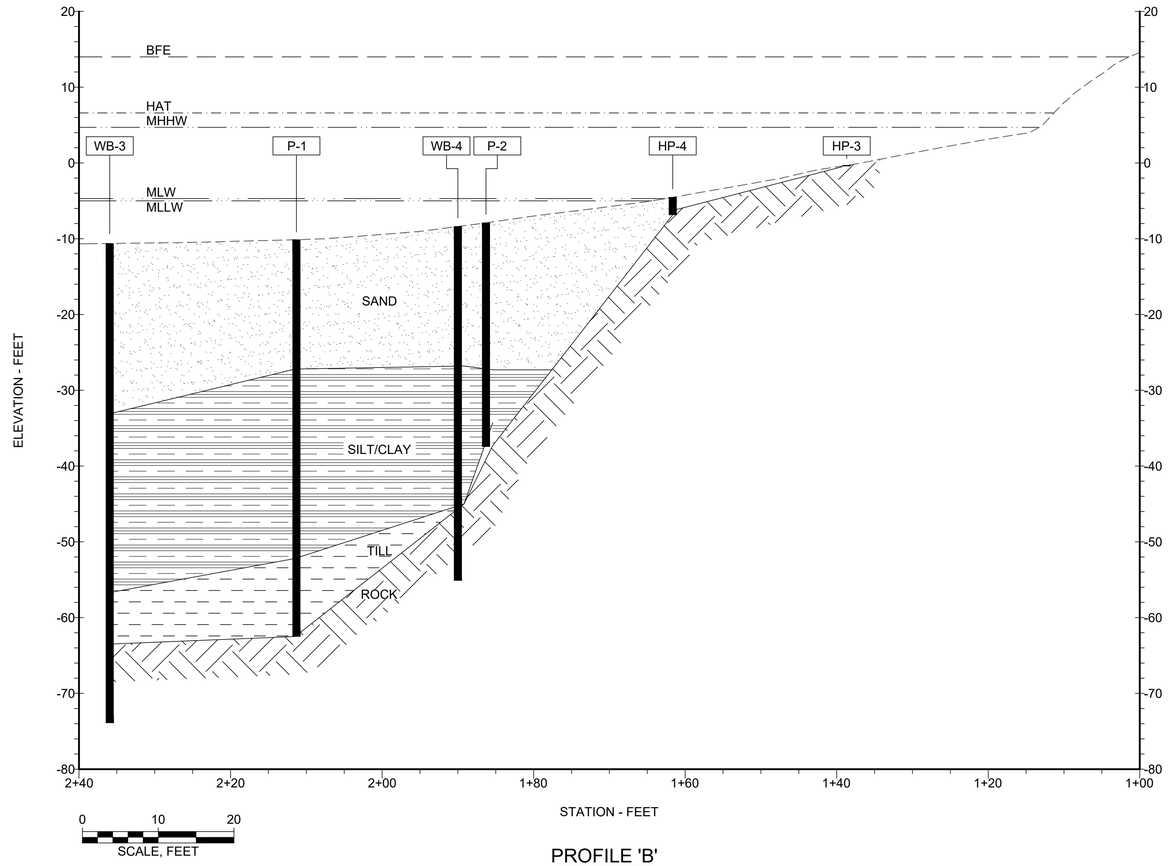

PROFILE 'B'

SCALE: 1" = 10'

FOR PERMIT

ELEVATION	MLLW	NAVD88*
BFE	+19.0	+14.0
HAT	+11.6	+6.6
MHHW	+9.7	+4.7
MHW	+9.3	+4.3
MSL	+4.8	-0.2
MLW	+0.3	-4.7
MLLW	0.0	-5.0

*PROJECT DATUM

Attention:

0 1"

If this scale bar does not measure 1" then drawing is not original scale.

STATE OF MAINE
BRIAN M. MCDEVITT
PE18260
LICENSED
PROFESSIONAL ENGINEER

6/9/2025

Designed:	DJB
Drawn:	JAM
Checked:	BJB
Approved:	BMM
P.E. No:	13033
GEI Project	2203703

GEI Consultants
GEI CONSULTANTS, INC.
5 MILK STREET
PORTLAND, ME 04101
(207)797-8901

UNE
UNIVERSITY OF NEW ENGLAND

11 HILLS BEACH RD.
BIDDEFORD, MAINE

UNIVERSITY OF NEW ENGLAND MARINE SCIENCE CENTER PIER

11 HILLS BEACH ROAD
BIDDEFORD, YORK COUNTY, MAINE

NO	DATE	ISSUE/REVISION	APP
8	6/5/2025	ADDRESS PB COMMENTS	DJB
7	4/16/2025	BIDDEFORD PERMIT APP.	DJB
6	9/17/2024	REVISED PERMIT SET	DJB
5	6/27/2024	REVISED PERMIT SET	DJB
4	9/14/2023	DEP PERMIT SET	DJB
3	6/28/2023	75% DESIGN SUBMISSION	DJB
2	2/15/2023	30% DESIGN SUBMISSION	DJB
1	12/9/2022	15% DESIGN SUB REV	DJB
0	11/11/2022	15% DESIGN SUBMISSION	DJB

SHEET NAME

INTERPRETIVE SUBSURFACE PROFILE

SHEET NO.

B-005

DICASTELNUOVO, VINNIE \\geiconsultants.com\data\Data_Storage\Working\UNIVERSITY OF NEW ENGLAND\2203703 UNE Marine Science Center Pier\00_CAD\Design\Sheets\2203703-B-005.dwg - 6/6/2025

LEGEND:

- EXISTING CONTOUR
- HAT SETBACK
- MLLW
- MHHW
- HAT
- BFE
- 250' SHORELAND ZONE
- TOP OF BANK
- LEDGE
- STRUCTURES

SURVEY AND PROPERTY NOTES:

1. LOCUS PARCEL IS DEPICTED ON CITY OF BIDDEFORD, TAX MAP 52, LOT 4 AND IS LOCATED IN THE INSTITUTIONAL (IN) ZONE. A PORTION OF THE SITE IS LOCATED IN THE LIMITED RESIDENTIAL (LR) SHORELAND OVERLAY DISTRICT.
2. THE RECORD OWNER IS THE UNIVERSITY OF NEW ENGLAND, BY DEED DATED APRIL 18, 1962, RECORDED IN THE YORK COUNTY REGISTRY OF DEEDS IN BOOK 1484, PAGE 0145.
3. UPLAND TOPOGRAPHY AND BASE SURVEY INFORMATION DEPICTED HEREON ARE BASED ON THE FOLLOWING SURVEYS:
   - "TOPOGRAPHIC SURVEY, MARINE SCIENCE CENTER, UNIVERSITY OF NEW ENGLAND" BY OWEN HASKELL, INC. DATED DEC. 13, 2022.
   - "TOPOGRAPHIC SURVEY AT MARINE SCIENCE CENTER" BY STATEWIDE SURVEYS, INC., DATED MAY 4, 2015.
4. HYDROGRAPHIC DATA DEPICTED HEREON IS BASED ON 2022 SURVEY BY OWEN HASKELL SURVEY.
5. FEDERAL CHANNEL LIMITS ARE DEPICTED BASED ON THE PLAN. "SACO RIVER, SACE AND BIDDEFORD, MAINE, CONDITION SURVEY" PUBLISHED BY THE U.S. ARMY CORPS OF ENGINEERS, DATED JULY 3, 2021.
6. HORIZONTAL COORDINATES ARE BASED ON NAD83 MAINE STATE PLANE WEST ZONE-1801 AND ARE EXPRESSED IN FEET. ELEVATIONS ARE BASED ON NAVD88 VERTICAL DATUM.
7. UTILITY INFORMATION DEPICTED HEREON IS BASED ON FEBRUARY 2023 UTILITY LOCATION SURVEY PERFORMED BY BLOOD HOUND, LLC UNDERGROUND UTILITY LOCATORS AND MAY NOT NECESSARILY REPRESENT ALL EXISTING UTILITIES. CONTACT DIG SAFE (1-888-DIG-SAFE) AND VERIFY EXISTING UTILITIES PRIOR TO ANY CONSTRUCTION OR EXCAVATION.
8. PORTIONS OF THE PROPERTY ARE DEPICTED AS BEING IN A SPECIAL FLOOD HAZARD AREA BASED ON FEMA PRELIMINARY FIRM 23031C0459G DATED APRIL 14, 2017. THE SITE IS LOCATED IN A VE ZONE HAVING BASE FLOOD ELEVATION OF 14 FT NAVD88.
9. SUBSURFACE INFORMATION IS BASED ON EXPLORATIONS PERFORMED IN 2015 AND 2022 CONSISTING OF BORINGS, PROBES, AND TEST PITS. REFER TO SHEETS B-001 - B-005 FOR SUBSURFACE INFORMATION.
10. BENCHMARKS:

0 30 60
SCALE, FEET

ELEVATION	MLLW	NAVD88*
BFE	+19.0	+14.0
HAT	+11.6	+6.6
MHHW	+9.7	+4.7
MHW	+9.3	+4.3
MSL	+4.8	-0.2
MLW	+0.3	-4.7
MLLW	0.0	-5.0

*PROJECT DATUM

Attention:
0 1"
If this scale bar does not measure 1" then drawing is not original scale.

STATE OF MAINE BRIAN M. MCDEVITT PE18260 LICENSED PROFESSIONAL ENGINEER
6/9/2025

Designed:	DJB
Drawn:	JAM
Checked:	BJB
Approved:	BMM
P.E. No:	13033
GEI Project	2203703

GEI Consultants
GEI CONSULTANTS, INC.
5 MILK STREET
PORTLAND, ME 04101
(207)797-8901

UNIVERSITY OF NEW ENGLAND
11 HILLS BEACH RD.
BIDDEFORD, MAINE

UNIVERSITY OF NEW ENGLAND MARINE SCIENCE CENTER PIER

11 HILLS BEACH ROAD
BIDDEFORD, YORK COUNTY, MAINE

NO	DATE	ISSUE/REVISION	APP
8	6/5/2025	ADDRESS PB COMMENTS	DJB
7	4/16/2025	BIDDEFORD PERMIT APP.	DJB
6	9/17/2024	REVISED PERMIT SET	DJB
5	6/27/2024	REVISED PERMIT SET	DJB
4	9/14/2023	DEP PERMIT SET	DJB
3	6/28/2023	75% DESIGN SUBMISSION	DJB
2	2/15/2023	30% DESIGN SUBMISSION	DJB
1	12/9/2022	15% DESIGN SUB REV	DJB
0	11/11/2022	15% DESIGN SUBMISSION	DJB

SHEET NAME
EXISTING CONDITIONS PLAN

SHEET NO.
C-001

FOR PERMIT

DJCASTELNUOVO, VINNIE \\geiconsultants.com\data\Data_Storage\Working\UNIVERSITY OF NEW ENGLAND\2203703 UNE Marine Science Center Pier\00_CAD\Design\Sheets\2203703-C-001.dwg - 6/9/2025

REMOVE LEDGE
SEE NOTE 2

MHHW = 4.7'

HAT = 6.6'

25' HAT SETBACK

50' HAT SETBACK

75' HAT SETBACK

BFE

MLLW

MLW

MHHW = 4.7'

HAT = 6.6'

BFE

GIRARD MARINE
SCIENCE CENTER
(APPROX. 16,865 SF)

THRESH=
33.02

FFE=32.96

THRESH=
33.01

2nd STORY OVERHANG

FFE=32.92

THRESH=
33.00

THRESH=
32.97

BUILDING
(752 SF)
THRESH
=16.98

REMOVE/DEMOLISH
TREE & STUMP,
TYP OF (49)

250' SHORELAND ZONE

CIRA STAMPED "CITY OF BIDDEFORD ZONE LINE"

TRANSFORMER
ON CONCRETE

GENERATOR ON
CONCRETE PAD

GENERATOR
EXHAUST
BUILDING

12" PLASTIC INV. = 32.05

12" RCP INV. = 30.99

12" RCP INV. = 30.91

15" RCP INV. = 31.19

12"RCP
INV.=33.20

RIM=32.52

RIM=32.63

RIM=32.66

RIM = 32.65
UNABLE TO OPEN

RIM=35.16

RIM=34.08

RIM=34.10

RIM=32.35

FOR PERMIT

LEGEND:

— — —LIMIT OF WORK

TREE TO BE REMOVED

NOTES:

1. CONTRACTOR SHALL COORDINATE STAGING OF ALL EQUIPMENT AND MATERIALS OUTSIDE OF THE LIMITS OF WORK AT OFF-SITE LOCATIONS AS APPROVED BY OWNER.
2. FIELD VERIFY EXTENTS OF EXPOSED LEDGE AND REVIEW WITH ENGINEER PRIOR TO REMOVAL.

0 20 40
SCALE, FEET

ELEVATION	MLLW	NAVD88*
BFE	+19.0	+14.0
HAT	+11.6	+6.6
MHHW	+9.7	+4.7
MHW	+9.3	+4.3
MSL	+4.8	-0.2
MLW	+0.3	-4.7
MLLW	0.0	-5.0

*PROJECT DATUM

Attention:
0 1"
If this scale bar does not measure 1" then drawing is not original scale.

STATE OF MAINE
BRIAN M. MCDEVITT
PE18260
LICENSED
PROFESSIONAL ENGINEER
6/9/2025

Designed:	DJB
Drawn:	JAM
Checked:	BJB
Approved:	BMM
P.E. No:	13033
GEI Project	2203703

GEI Consultants
GEI CONSULTANTS, INC.
5 MILK STREET
PORTLAND, ME 04101
(207)797-8901

UNIVERSITY OF
NEW ENGLAND

11 HILLS BEACH RD.
BIDDEFORD, MAINE

UNIVERSITY OF NEW ENGLAND MARINE SCIENCE CENTER PIER

11 HILLS BEACH ROAD
BIDDEFORD, YORK COUNTY, MAINE

NO	DATE	ISSUE/REVISION	APP
8	6/5/2025	ADDRESS PB COMMENTS	DJB
7	4/16/2025	BIDDEFORD PERMIT APP.	DJB
6	9/17/2024	REVISED PERMIT SET	DJB
5	6/27/2024	REVISED PERMIT SET	DJB
4	9/14/2023	DEP PERMIT SET	DJB
3	6/28/2023	75% DESIGN SUBMISSION	DJB
2	2/15/2023	30% DESIGN SUBMISSION	DJB
1	12/9/2022	15% DESIGN SUB REV	DJB
0	11/11/2022	15% DESIGN SUBMISSION	DJB

SHEET NAME

DEMOLITION AND CONSTRUCTION STAGING

SHEET NO.

C-002

DJCASTELNUOVO, VINNIE \\geiconsultants.com\data\Data_Storage\Working\UNIVERSITY OF NEW ENGLAND\2203703 UNE Marine Science Center Pier\00_CAD\Design\Sheets\2203703-C-002.dwg - 6/9/2025

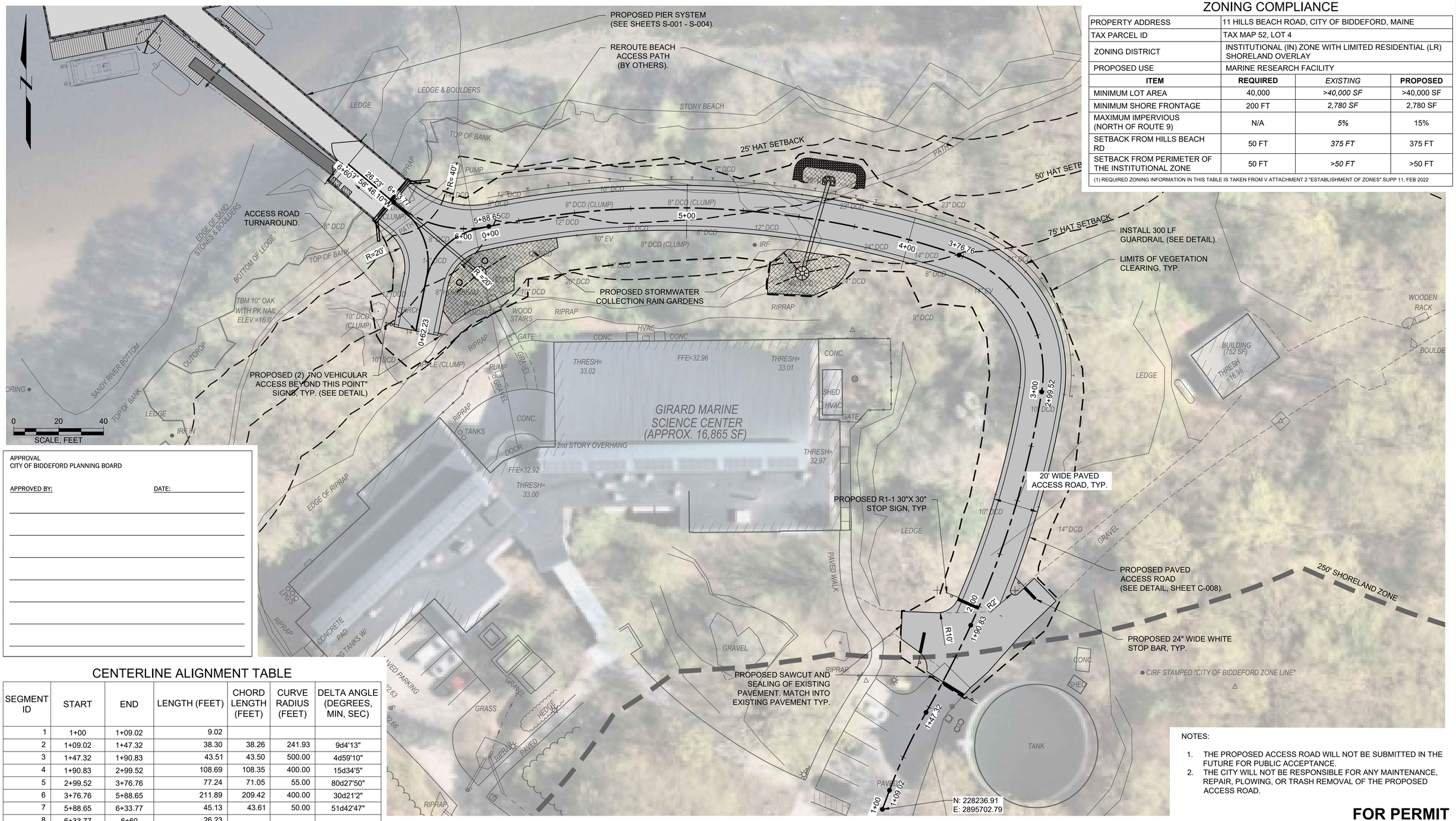

ZONING COMPLIANCE

PROPERTY ADDRESS	11 HILLS BEACH ROAD, CITY OF BIDDEFORD, MAINE		
TAX PARCEL ID	TAX MAP 52, LOT 4		
ZONING DISTRICT	INSTITUTIONAL (IN) ZONE WITH LIMITED RESIDENTIAL (LR) SHORELAND OVERLAY		
PROPOSED USE	MARINE RESEARCH FACILITY		
ITEM	**REQUIRED**	*EXISTING*	**PROPOSED**
MINIMUM LOT AREA	40,000	*>40,000 SF*	>40,000 SF
MINIMUM SHORE FRONTAGE	200 FT	*2,780 SF*	2,780 SF
MAXIMUM IMPERVIOUS (NORTH OF ROUTE 9)	N/A	*5%*	15%
SETBACK FROM HILLS BEACH RD	50 FT	*375 FT*	375 FT
SETBACK FROM PERIMETER OF THE INSTITUTIONAL ZONE	50 FT	*>50 FT*	>50 FT

(1) REQUIRED ZONING INFORMATION IN THIS TABLE IS TAKEN FROM V ATTACHMENT 2 "ESTABLISHMENT OF ZONES" SUPP 11, FEB 2022

APPROVAL
CITY OF BIDDEFORD PLANNING BOARD

APPROVED BY: DATE:

CENTERLINE ALIGNMENT TABLE

SEGMENT ID	START	END	LENGTH (FEET)	CHORD LENGTH (FEET)	CURVE RADIUS (FEET)	DELTA ANGLE (DEGREES, MIN, SEC)
1	1+00	1+09.02	9.02			
2	1+09.02	1+47.32	38.30	38.26	241.93	9d4'13"
3	1+47.32	1+90.83	43.51	43.50	500.00	4d59'10"
4	1+90.83	2+99.52	108.69	108.35	400.00	15d34'5"
5	2+99.52	3+76.76	77.24	71.05	55.00	80d27'50"
6	3+76.76	5+88.65	211.89	209.42	400.00	30d21'2"
7	5+88.65	6+33.77	45.13	43.61	50.00	51d42'47"
8	6+33.77	6+60	26.23			

ELEVATION	MLLW	NAVD88*
BFE	+19.0	+14.0
HAT	+11.6	+6.6
MHHW	+9.7	+4.7
MHW	+9.3	+4.3
MSL	+4.8	-0.2
MLW	+0.3	-4.7
MLLW	0.0	-5.0

*PROJECT DATUM

NOTES:

1. THE PROPOSED ACCESS ROAD WILL NOT BE SUBMITTED IN THE FUTURE FOR PUBLIC ACCEPTANCE.
2. THE CITY WILL NOT BE RESPONSIBLE FOR ANY MAINTENANCE, REPAIR, PLOWING, OR TRASH REMOVAL OF THE PROPOSED ACCESS ROAD.

FOR PERMIT

Attention:
0 1"
If this scale bar does not measure 1" then drawing is not original scale.

STATE OF MAINE
BRIAN M. MCDEVITT
PE18260
LICENSED
PROFESSIONAL ENGINEER
6/9/2025

Designed:	DJB
Drawn:	JAM
Checked:	BJB
Approved:	BMM
P.E. No:	13033
GEI Project	2203703

GEI Consultants
GEI CONSULTANTS, INC.
5 MILK STREET
PORTLAND, ME 04101
(207)797-8901

UNE
UNIVERSITY OF NEW ENGLAND
11 HILLS BEACH RD.
BIDDEFORD, MAINE

UNIVERSITY OF NEW ENGLAND MARINE SCIENCE CENTER PIER

11 HILLS BEACH ROAD
BIDDEFORD, YORK COUNTY, MAINE

NO	DATE	ISSUE/REVISION	APP
8	6/5/2025	ADDRESS PB COMMENTS	DJB
7	4/16/2025	BIDDEFORD PERMIT APP.	DJB
6	9/17/2024	REVISED PERMIT SET	DJB
5	6/27/2024	REVISED PERMIT SET	DJB
4	9/14/2023	DEP PERMIT SET	DJB
3	6/28/2023	75% DESIGN SUBMISSION	DJB
2	2/15/2023	30% DESIGN SUBMISSION	DJB
1	12/9/2022	15% DESIGN SUB REV	DJB
0	11/11/2022	15% DESIGN SUBMISSION	DJB

SHEET NAME: **SITE PLAN**

SHEET NO.: **C-003**

DICASTELNUOVO, VINNIE B:\Working\UNIVERSITY OF NEW ENGLAND\2203703 UNE Marine Science Center Pier\00_CAD\Design\Sheets\2203703-C-003.dwg - 6/10/2025

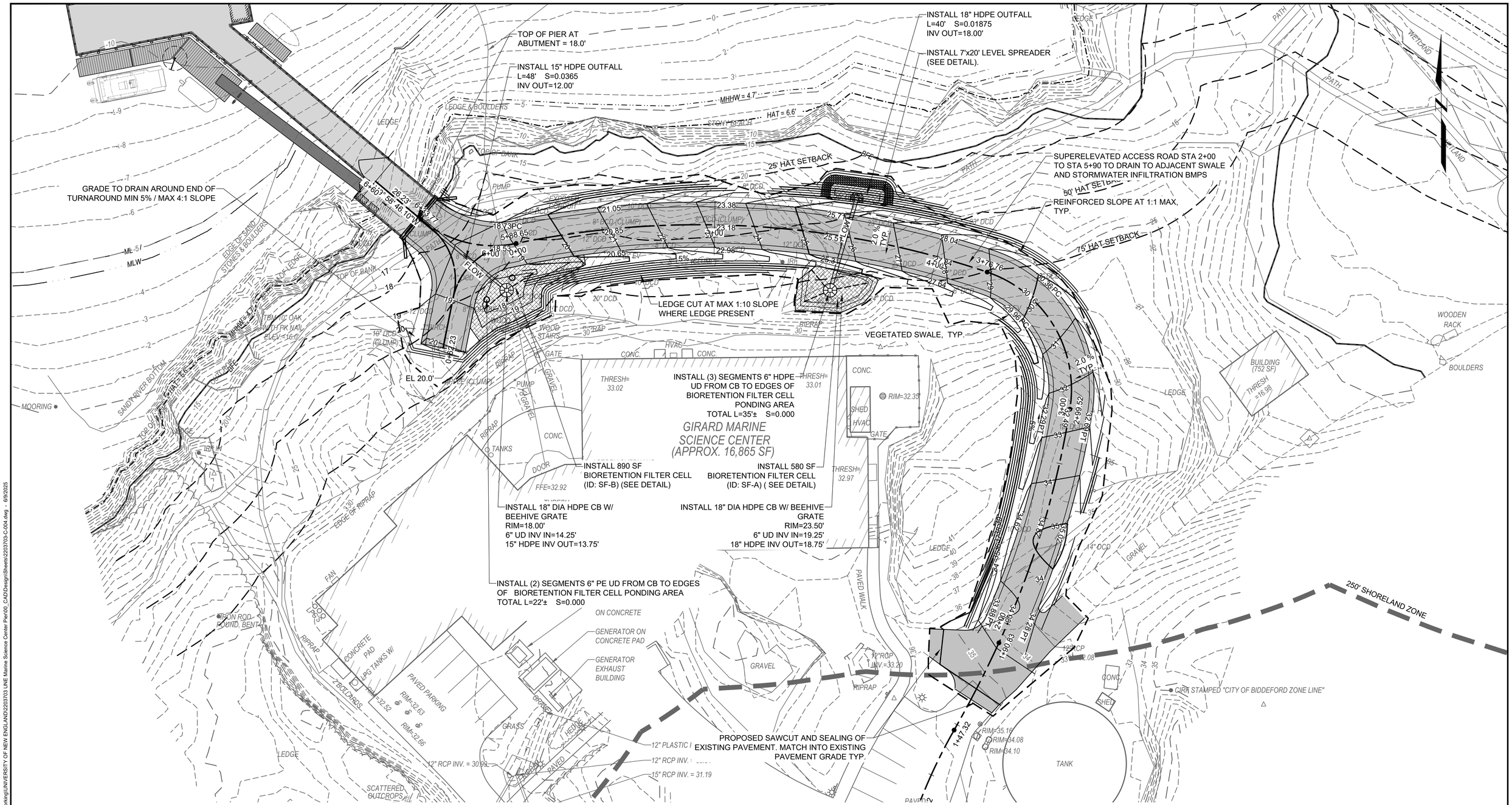

PLAN
SCALE: 1" = 20'

FOR PERMIT

0 20 40
SCALE, FEET

Attention:
0 1"
If this scale bar does not measure 1" then drawing is not original scale.

STATE OF MAINE
BRIAN M. MCDEVITT
PE18260
LICENSED
PROFESSIONAL ENGINEER
6/9/2025

Designed:	DJB
Drawn:	JAM
Checked:	BJB
Approved:	BMM
P.E. No:	13033
GEI Project	2203703

GEI Consultants
GEI CONSULTANTS, INC.
5 MILK STREET
PORTLAND, ME 04101
(207)797-8901

UNE
UNIVERSITY OF NEW ENGLAND
11 HILLS BEACH RD.
BIDDEFORD, MAINE

UNIVERSITY OF NEW ENGLAND MARINE SCIENCE CENTER PIER
11 HILLS BEACH ROAD
BIDDEFORD, YORK COUNTY, MAINE

NO	DATE	ISSUE/REVISION	APP
8	6/5/2025	ADDRESS PB COMMENTS	DJB
7	4/16/2025	BIDDEFORD PERMIT APP.	DJB
6	9/17/2024	REVISED PERMIT SET	DJB
5	6/27/2024	REVISED PERMIT SET	DJB
4	9/14/2023	DEP PERMIT SET	DJB
3	6/28/2023	75% DESIGN SUBMISSION	DJB
2	2/15/2023	30% DESIGN SUBMISSION	DJB
1	12/9/2022	15% DESIGN SUB REV	DJB
0	11/11/2022	15% DESIGN SUBMISSION	DJB

SHEET NAME
GRADING AND DRAINAGE PLAN

SHEET NO.
C-004

DJCASTELNUOVO, V:\NE \\geiconsultants.com\data\Data_Storage\Working\UNIVERSITY OF NEW ENGLAND\2203703 UNE Marine Science Center Pier\00_CAD\Design\Sheets\2203703-C-004.dwg - 6/9/2025

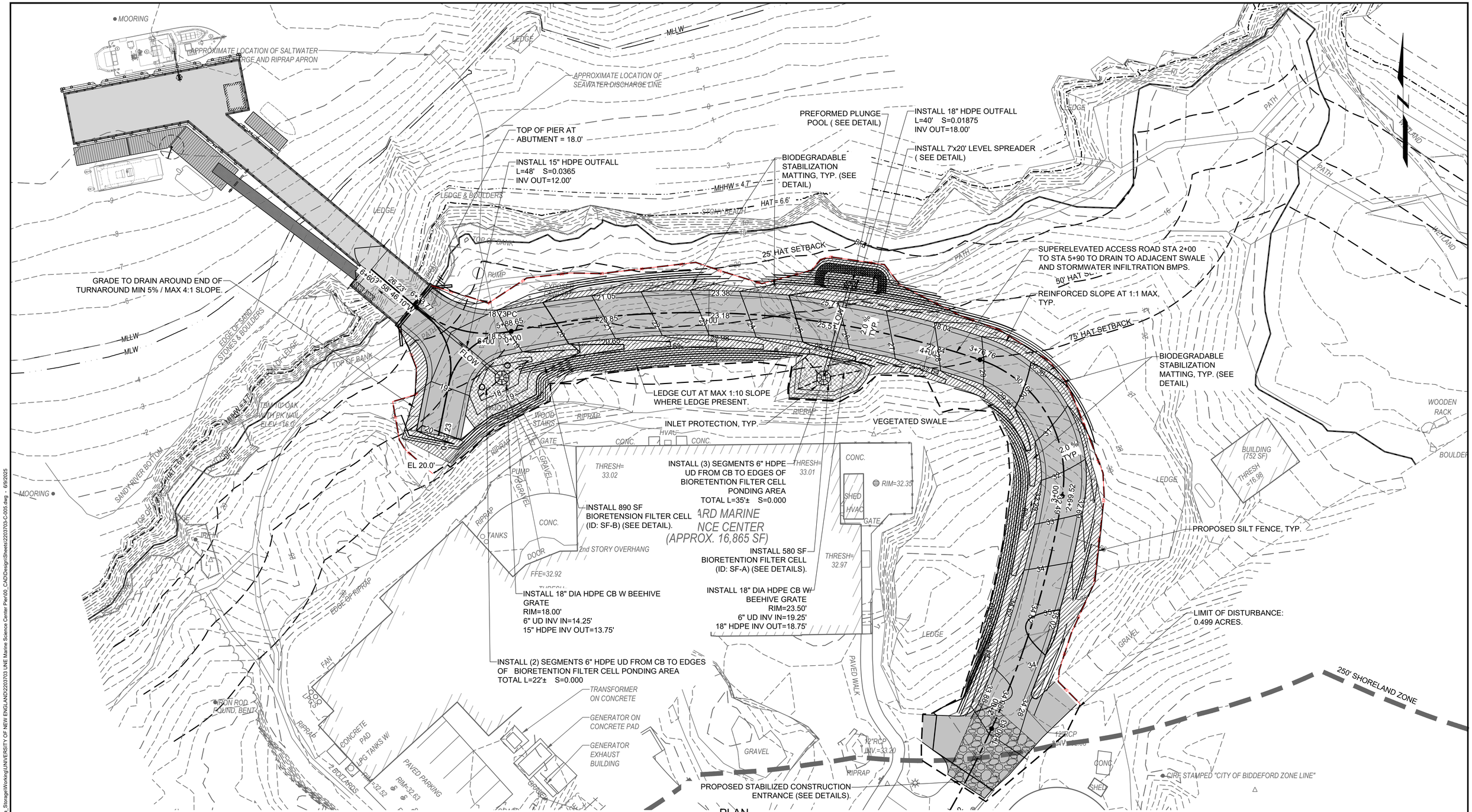
MOORING
APPROXIMATE LOCATION OF SALTWATER DISCHARGE AND RIPRAP APRON
APPROXIMATE LOCATION OF SEAWATER DISCHARGE LINE
MLLW
MLW
MHHW = 4.7'
HAT = 6.6'
LEDGE
LEDGE & BOULDERS
STONE BEACH
TOP OF BANK
TOP OF SLOPE
PUMP
EXPOSED FOUNDATION
PATH
WETLAND
TOP OF PIER AT ABUTMENT = 18.0'
INSTALL 15" HDPE OUTFALL L=48' S=0.0365 INV OUT=12.00'
PREFORMED PLUNGE POOL (SEE DETAIL)
INSTALL 18" HDPE OUTFALL L=40' S=0.01875 INV OUT=18.00'
INSTALL 7'x20' LEVEL SPREADER (SEE DETAIL)
BIODEGRADABLE STABILIZATION MATTING, TYP. (SEE DETAIL)
25' HAT SETBACK
75' HAT SETBACK
SUPERELEVATED ACCESS ROAD STA 2+00 TO STA 5+90 TO DRAIN TO ADJACENT SWALE AND STORMWATER INFILTRATION BMPS.
REINFORCED SLOPE AT 1:1 MAX, TYP.
GRADE TO DRAIN AROUND END OF TURNAROUND MIN 5% / MAX 4:1 SLOPE.
EDGE OF SAND STONES & BOULDERS
SANDY RIVER BOTTOM
TBLE TO OAK WITH PK NAIL ELEV = 16.0'
IRON ROD FOUND
EDGE OF RIPRAP
EL 20.0'
FLOW
RIPRAP
WOOD STAIRS
GATE
GRAVEL
CONC.
HVAC
PUMP
TANKS
DOOR
2nd STORY OVERHANG
FFE=32.92
THRESH= 33.02
THRESH= 33.01
THRESH= 32.97
INSTALL (3) SEGMENTS 6" HDPE UD FROM CB TO EDGES OF BIORETENTION FILTER CELL PONDING AREA TOTAL L=35'± S=0.000
INSTALL 890 SF BIORETENSION FILTER CELL (ID: SF-B) (SEE DETAIL).
INSTALL 580 SF BIORETENTION FILTER CELL (ID: SF-A) (SEE DETAILS).
INSTALL 18" DIA HDPE CB W BEEHIVE GRATE RIM=18.00' 6" UD INV IN=14.25' 15" HDPE INV OUT=13.75'
INSTALL 18" DIA HDPE CB W/ BEEHIVE GRATE RIM=23.50' 6" UD INV IN=19.25' 18" HDPE INV OUT=18.75'
INSTALL (2) SEGMENTS 6" HDPE UD FROM CB TO EDGES OF BIORETENTION FILTER CELL PONDING AREA TOTAL L=22'± S=0.000
LEDGE CUT AT MAX 1:10 SLOPE WHERE LEDGE PRESENT.
INLET PROTECTION, TYP.
VEGETATED SWALE
PROPOSED SILT FENCE, TYP.
LIMIT OF DISTURBANCE: 0.499 ACRES.
PROPOSED STABILIZED CONSTRUCTION ENTRANCE (SEE DETAILS).
250' SHORELAND ZONE
CIRF STAMPED "CITY OF BIDDEFORD ZONE LINE"
BUILDING (752 SF)
THRESH =16.98
WOODEN RACK
BOULDER
SHED
HVAC
RIM=32.35'
RIM=32.52
RIM=32.63
2 BOLLARDS
CONCRETE PAD
LPG TANKS W/
TRANSFORMER ON CONCRETE
GENERATOR ON CONCRETE PAD
GENERATOR EXHAUST BUILDING
PAVED PARKING
PAVED WALK
FAN
LOGS
RIPRAP
GRAVEL
12"RCP INV=33.20
12"RCP
2.0 % TYP
4.0 %
3+76.76
4+00.84
5+88.65
6+00
0+00
6+69.58
26.23'
S46.10'W
18"CPC
18.53
18.77
21.05
23.36
23.18
20.85
20.65
25.51
25.51
18.04
30.58
30.58
2+99.52
3+00
3+64.49
32.92
33.00
33.00
33.00

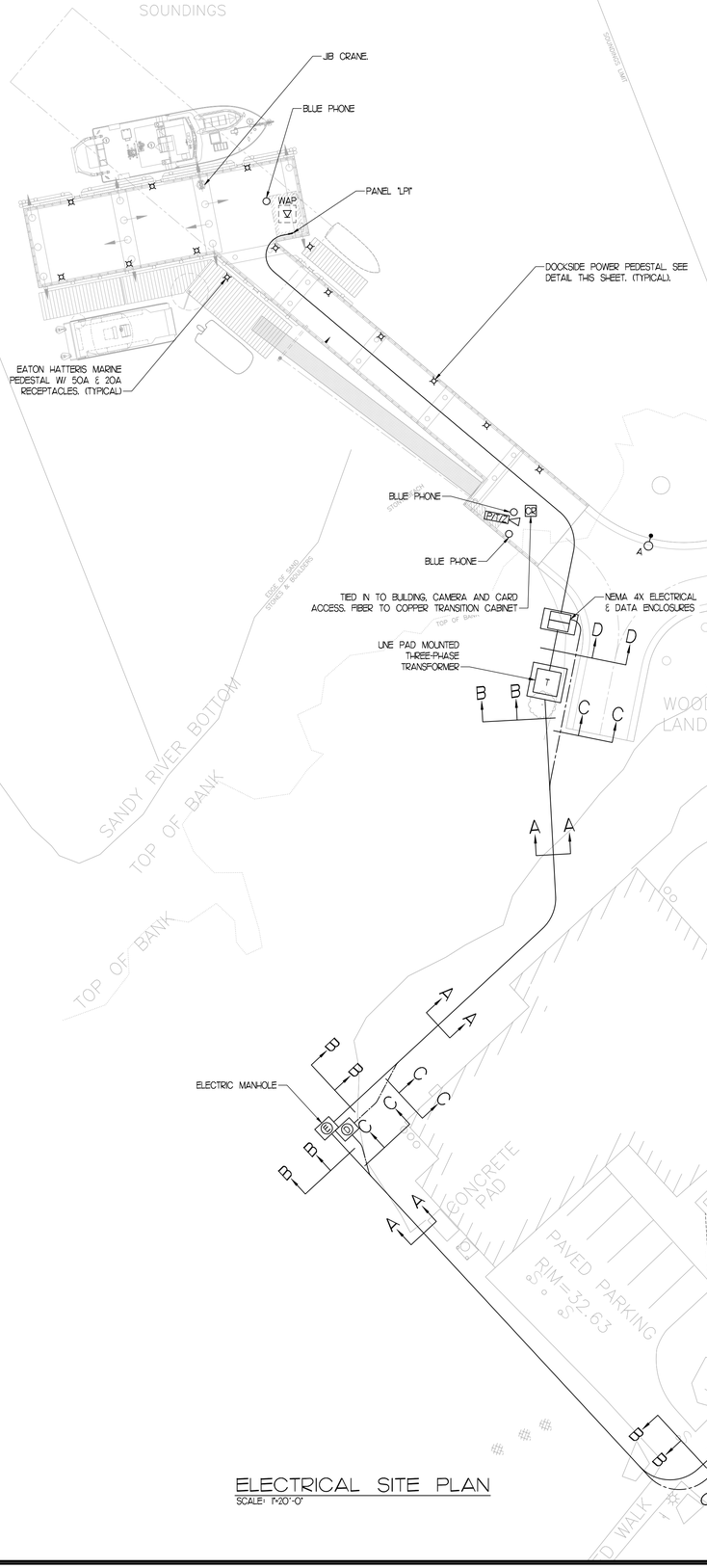

ELECTRICAL SITE PLAN
SCALE: 1"-20'-0"

Hatteras Light Power Pedestal - Specifications

Marina Power and Lighting Equipment
Marina Power and Lighting Equipment

Product Features (cont.)

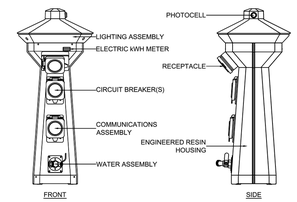

Dimensions

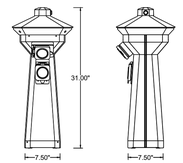

www.marinapower.com 1-800-723-8009 **Hatteras Light** - Product Specifications

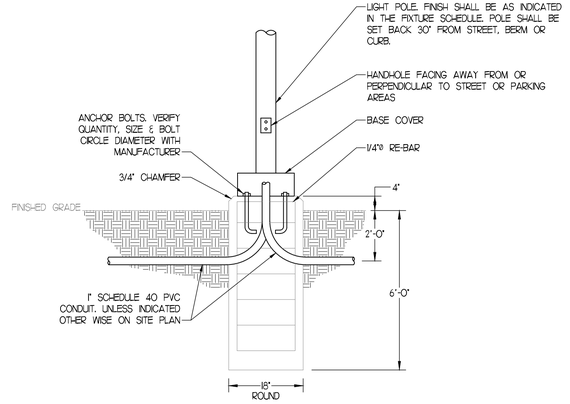

POLE BASE DETAIL
NOT TO SCALE

VINCENT A. DiORIO, INC.
CONSULTING ENGINEERS
89 Access Rd. Suite 18
Norwood, MA 02062
(781)255-9754 | vadjr@vadeng.com
www.vadeng.com

REVISIONS:

REV.:	DATE:	DESCRIPTION:

CLIENT:
UNIVERSITY OF NEW ENGLAND

PROJECT:
MARINE SCIENCE CENTER PIER
11 HILLS BEACH ROAD
BIDDEFORD, MAINE

DRAWING TITLE
ELECTRICAL SITE PLAN

DRAWN:	CWQ
CHECKED:	VAD Jr
SCALE:	AS INDICATED
DATE:	APRIL 15, 2025

ES1.1

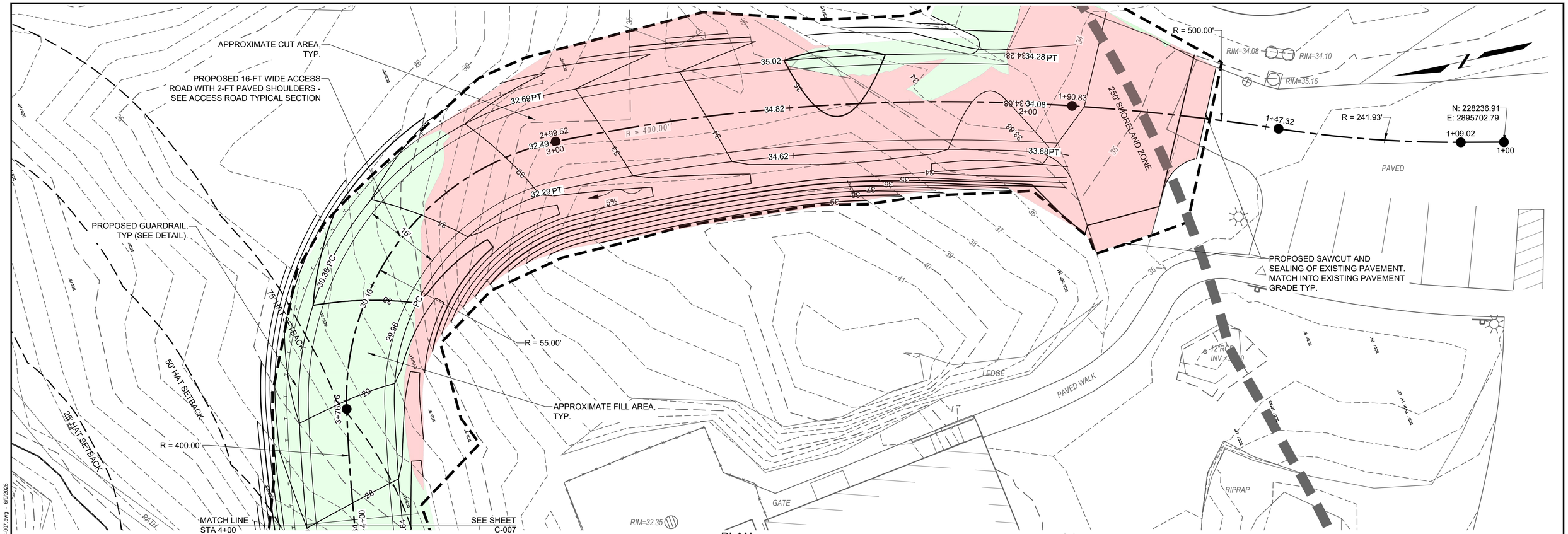

0 10 20
SCALE, FEET

PLAN
SCALE: 1" = 10'

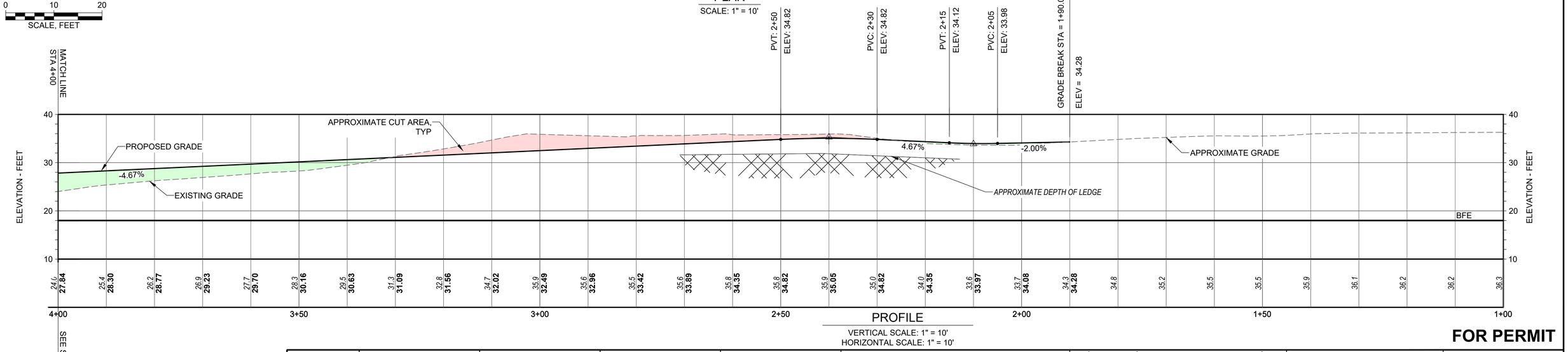

PROFILE
VERTICAL SCALE: 1" = 10'
HORIZONTAL SCALE: 1" = 10'

FOR PERMIT

CUT/FILL ANALYSIS

STRUCTURE	QUANTITY (CY)
CUT	2174.50
FILL	782.30
NET (FILL)	1392.20

Attention:
0 1"
If this scale bar does not measure 1" then drawing is not original scale.

STATE OF MAINE
BRIAN M. MCDEVITT
PE18260
LICENSED
PROFESSIONAL ENGINEER
6/9/2025

Designed:	DJB
Drawn:	JAM
Checked:	BJB
Approved:	BMM
P.E. No:	13033
GEI Project	2203703

GEI Consultants
GEI CONSULTANTS, INC.
5 MILK STREET
PORTLAND, ME 04101
(207)797-8901

UNE
UNIVERSITY OF NEW ENGLAND
11 HILLS BEACH RD.
BIDDEFORD, MAINE

UNIVERSITY OF NEW ENGLAND MARINE SCIENCE CENTER PIER

11 HILLS BEACH ROAD
BIDDEFORD, YORK COUNTY, MAINE

NO	DATE	ISSUE/REVISION	APP
8	6/5/2025	ADDRESS PB COMMENTS	DJB
7	4/16/2025	BIDDEFORD PERMIT APP.	DJB
6	9/17/2024	REVISED PERMIT SET	DJB
5	6/27/2024	REVISED PERMIT SET	DJB
4	9/14/2023	DEP PERMIT SET	DJB
3	6/28/2023	75% DESIGN SUBMISSION	DJB
2	2/15/2023	30% DESIGN SUBMISSION	DJB
1	12/9/2022	15% DESIGN SUB REV	DJB
0	11/11/2022	15% DESIGN SUBMISSION	DJB

SHEET NAME
ACCESS ROAD PLAN AND PROFILE STA 1+00 TO 4+00

SHEET NO.
C-006

DICASTELNUOVO, VINNIE \\geiconsultants.com\data\Data_Storage\Working\UNIVERSITY OF NEW ENGLAND\2203703 UNE Marine Science Center Pier\00_CAD\Design\Sheets\2203703-C-006 C-007.dwg - 6/9/2025

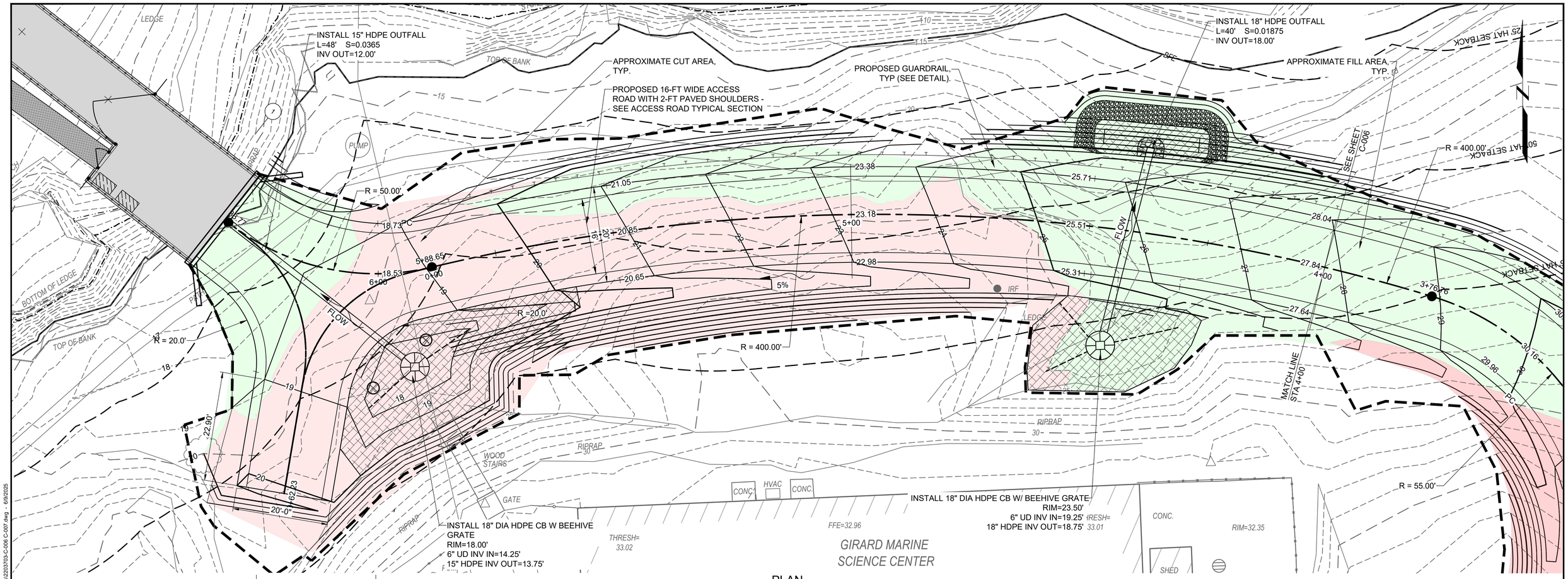

CUT/FILL ANALYSIS

STRUCTURE	QUANTITY (CY)
CUT	2174.50
FILL	782.30
NET (FILL)	1392.20

FOR PERMIT

Attention:
0 1"
If this scale bar does not measure 1" then drawing is not original scale.

STATE OF MAINE
BRIAN M. MCDEVITT
PE18260
LICENSED
PROFESSIONAL ENGINEER
6/9/2025

Designed:	DJB
Drawn:	JAM
Checked:	BJB
Approved:	BMM
P.E. No:	13033
GEI Project	2203703

GEI Consultants
GEI CONSULTANTS, INC.
5 MILK STREET
PORTLAND, ME 04101
(207)797-8901

UNE
UNIVERSITY OF NEW ENGLAND
11 HILLS BEACH RD.
BIDDEFORD, MAINE

UNIVERSITY OF NEW ENGLAND MARINE SCIENCE CENTER PIER

11 HILLS BEACH ROAD
BIDDEFORD, YORK COUNTY, MAINE

NO	DATE	ISSUE/REVISION	APP
8	6/5/2025	ADDRESS PB COMMENTS	DJB
7	4/16/2025	BIDDEFORD PERMIT APP.	DJB
6	9/17/2024	REVISED PERMIT SET	DJB
5	6/27/2024	REVISED PERMIT SET	DJB
4	9/14/2023	DEP PERMIT SET	DJB
3	6/28/2023	75% DESIGN SUBMISSION	DJB
2	2/15/2023	30% DESIGN SUBMISSION	DJB
1	12/9/2022	15% DESIGN SUB REV	DJB
0	11/11/2022	15% DESIGN SUBMISSION	DJB

SHEET NAME
ACCESS ROAD PLAN AND PROFILE STA 4+00 TO STA 6+60

SHEET NO.
C-007

DJCASTELNUOVO, VINNIE \\geiconsultants.com\data\Data_Storage\Working\UNIVERSITY OF NEW ENGLAND\2203703 UNE Marine Science Center Pier\00_CAD\Design\Sheets\2203703-C-006 C-007.dwg - 6/9/2025

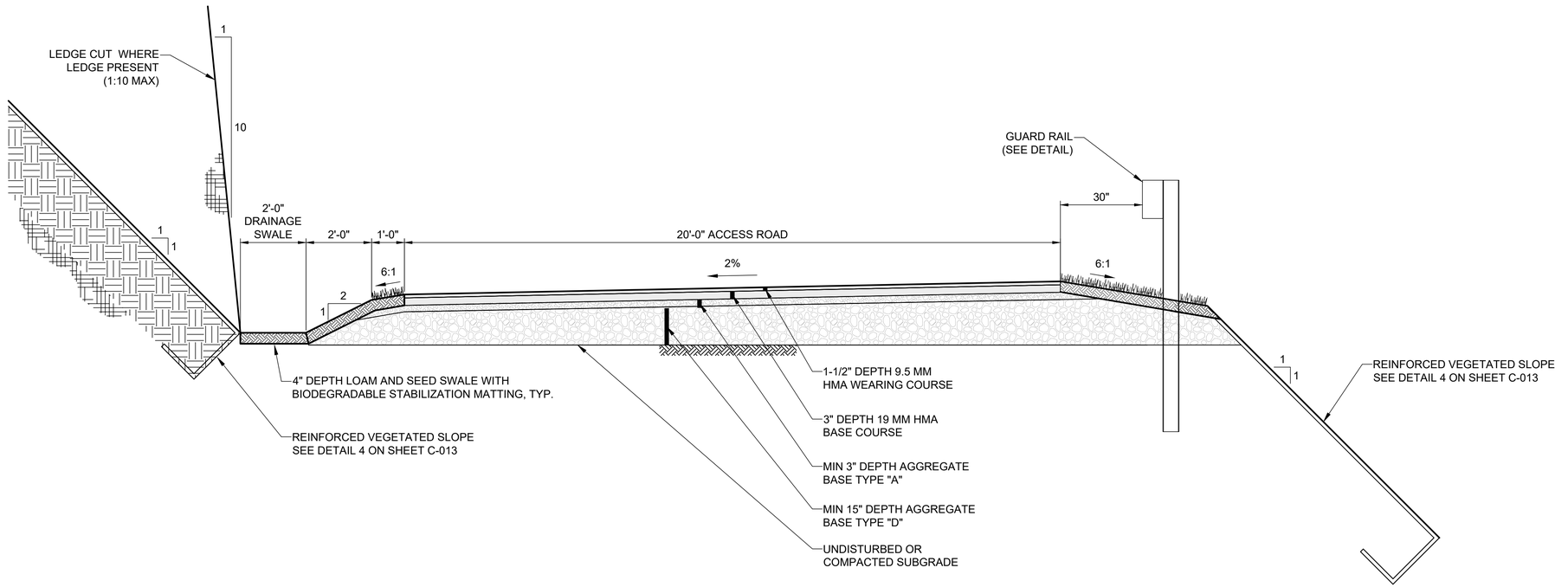

TYPICAL ACCESS ROAD SECTION

SCALE: NTS

FOR PERMIT

Attention:

0 1"

If this scale bar does not measure 1" then drawing is not original scale.

STATE OF MAINE
BRIAN M. MCDEVITT
PE18260
LICENSED
PROFESSIONAL ENGINEER

6/9/2025

Designed:	DJB
Drawn:	JAM
Checked:	BJB
Approved:	BMM
P.E. No:	13033
GEI Project	2203703

GEI Consultants
GEI CONSULTANTS, INC.
5 MILK STREET
PORTLAND, ME 04101
(207)797-8901

UNE
UNIVERSITY OF NEW ENGLAND

11 HILLS BEACH RD.
BIDDEFORD, MAINE

UNIVERSITY OF NEW ENGLAND MARINE SCIENCE CENTER PIER

11 HILLS BEACH ROAD
BIDDEFORD, YORK COUNTY, MAINE

NO	DATE	ISSUE/REVISION	APP
8	6/5/2025	ADDRESS PB COMMENTS	DJB
7	4/16/2025	BIDDEFORD PERMIT APP.	DJB
6	9/17/2024	REVISED PERMIT SET	DJB
5	6/27/2024	REVISED PERMIT SET	DJB
4	9/14/2023	DEP PERMIT SET	DJB
3	6/28/2023	75% DESIGN SUBMISSION	DJB
2	2/15/2023	30% DESIGN SUBMISSION	DJB
1	12/9/2022	15% DESIGN SUB REV	DJB
0	11/11/2022	15% DESIGN SUBMISSION	DJB

SHEET NAME

ACCESS ROAD TYPICAL SECTION

SHEET NO.

C-008

D:\CASTELNUOVO, VINNIE \\geiconsultants.com\data\Data_Storage\Working\UNIVERSITY OF NEW ENGLAND\2203703 UNE Marine Science Center Pier\00_CAD\Design\Sheets\2203703-C-008.dwg - 6/9/2025

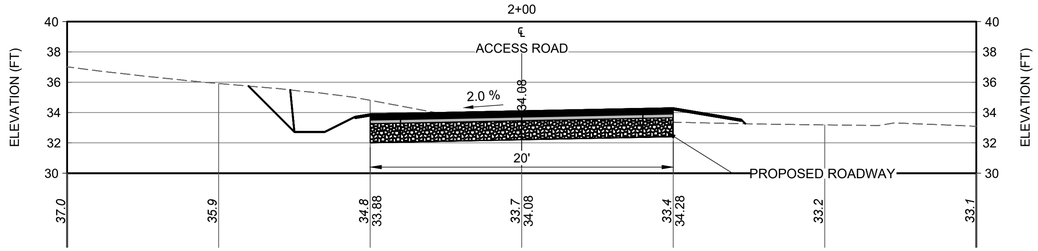

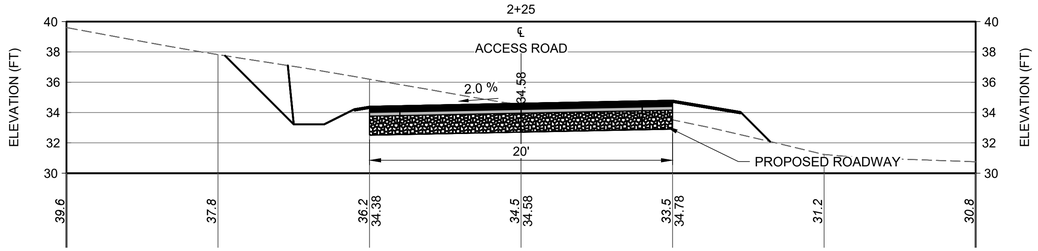

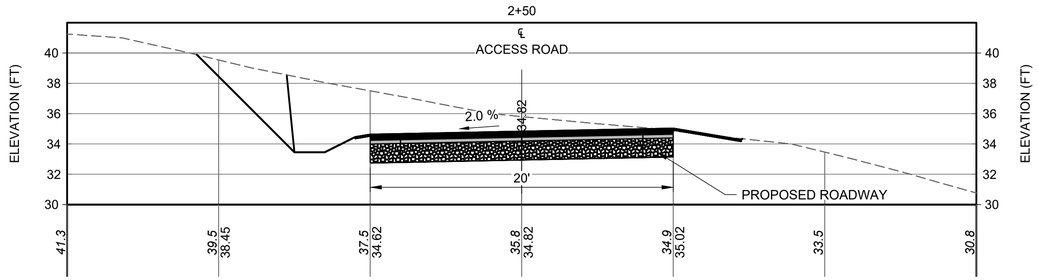

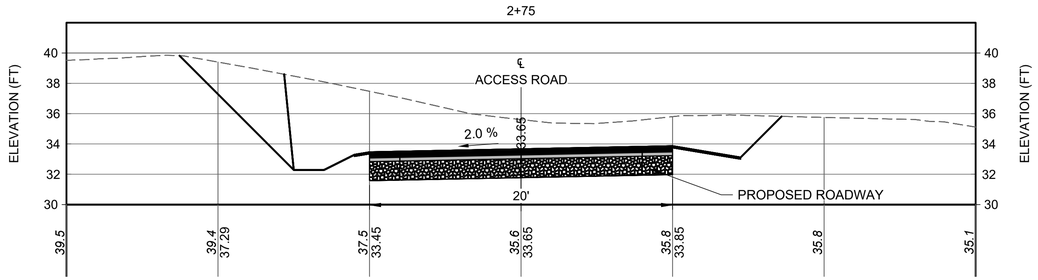

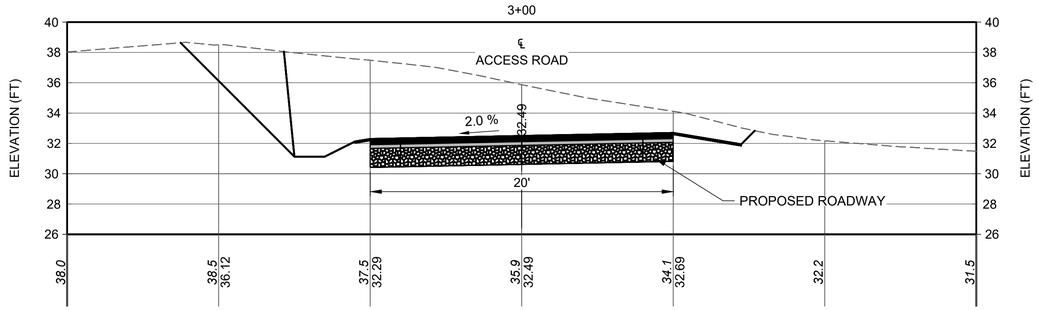

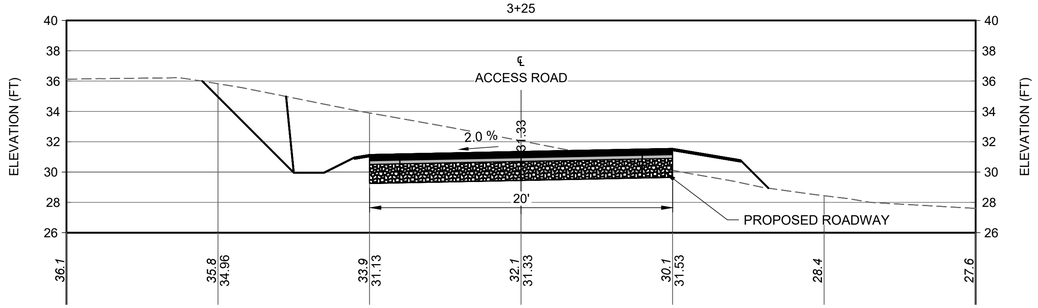

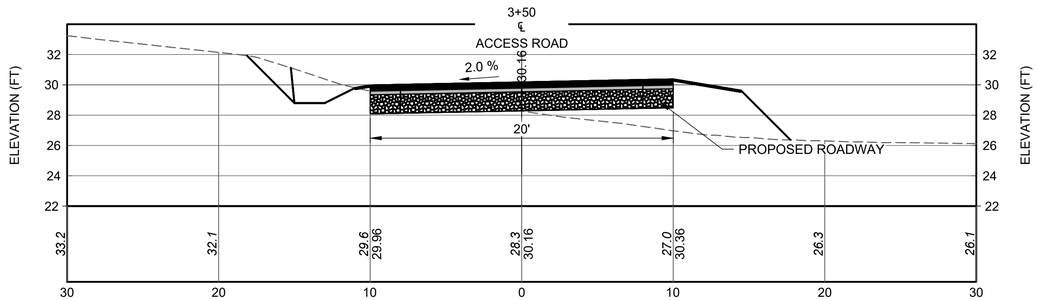

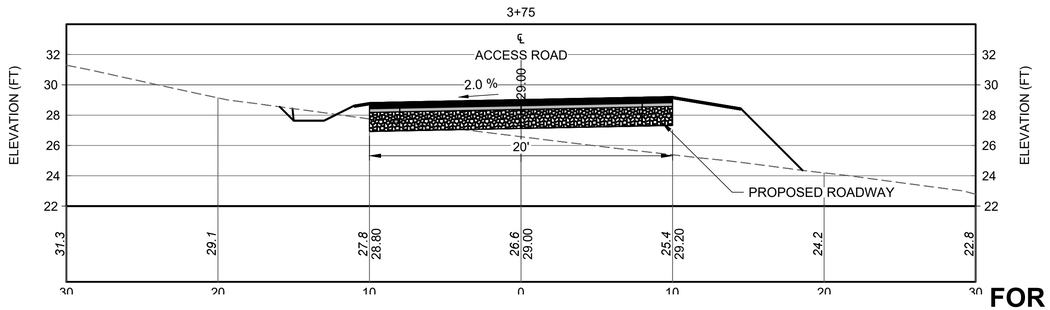

FOR PERMIT

0 2.5 5 10
SCALE, FEET

Attention:
0 1"
If this scale bar does not measure 1" then drawing is not original scale.

STATE OF MAINE
BRIAN M. MCDEVITT
PE18260
LICENSED
PROFESSIONAL ENGINEER
6/9/2025

Designed:	DJB
Drawn:	JAM
Checked:	BJB
Approved:	BMM
P.E. No:	13033
GEI Project	2203703

GEI Consultants
GEI CONSULTANTS, INC.
5 MILK STREET
PORTLAND, ME 04101
(207)797-8901

UNIVERSITY OF NEW ENGLAND
11 HILLS BEACH RD.
BIDDEFORD, MAINE

UNIVERSITY OF NEW ENGLAND MARINE SCIENCE CENTER PIER

11 HILLS BEACH ROAD
BIDDEFORD, YORK COUNTY, MAINE

NO	DATE	ISSUE/REVISION	APP
8	6/5/2025	ADDRESS PB COMMENTS	DJB
7	4/16/2025	BIDDEFORD PERMIT APP.	DJB
6	9/17/2024	REVISED PERMIT SET	DJB
5	6/27/2024	REVISED PERMIT SET	DJB
4	9/14/2023	DEP PERMIT SET	DJB
3	6/28/2023	75% DESIGN SUBMISSION	DJB
2	2/15/2023	30% DESIGN SUBMISSION	DJB
1	12/9/2022	15% DESIGN SUB REV	DJB
0	11/11/2022	15% DESIGN SUBMISSION	DJB

SHEET NAME

ROAD ACCESS SECTIONS STA 2+00 TO 3+75

SHEET NO.

C-009

DICASTELNUOVO, VINNIE \\geiconsultants.com\data\Data_Storage\Working\UNIVERSITY OF NEW ENGLAND\2203703 UNE Marine Science Center Pier\00_CAD\Design\Sheets\2203703-C-009 C-010.dwg - 6/9/2025

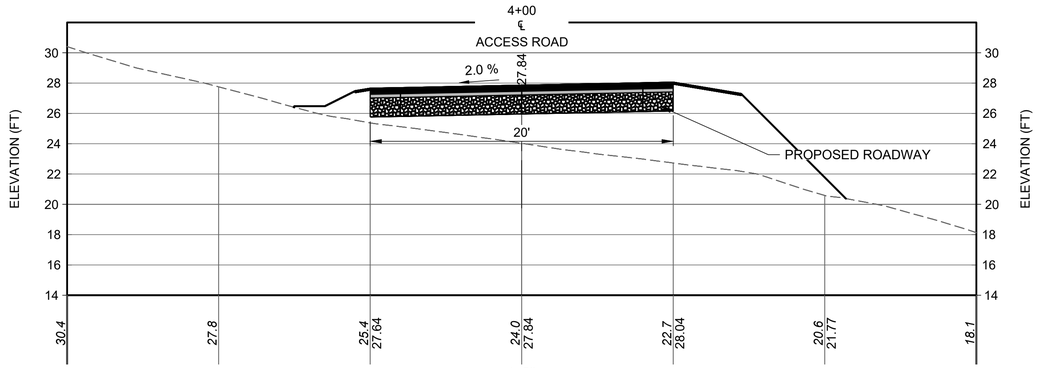

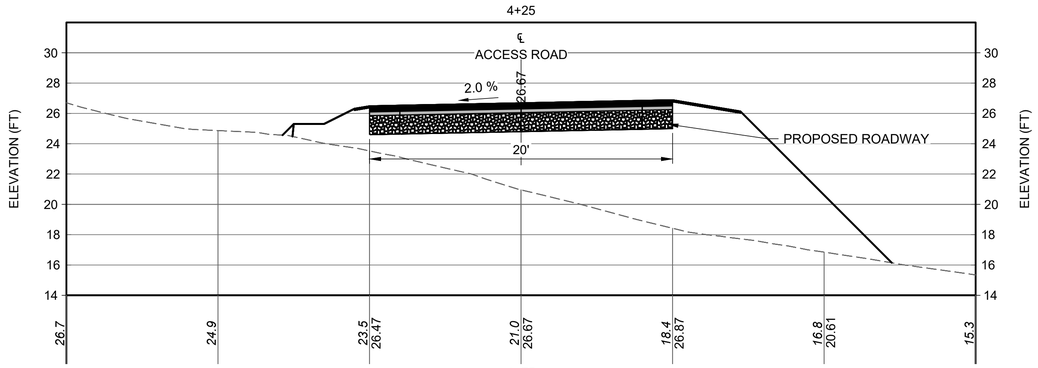

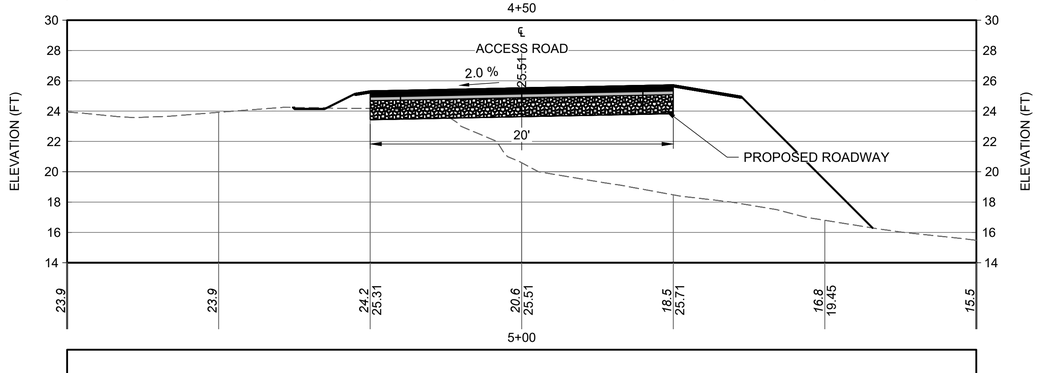

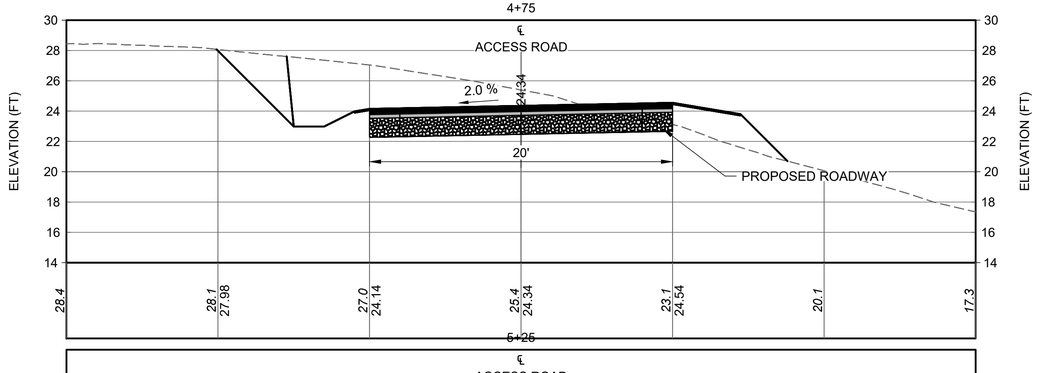

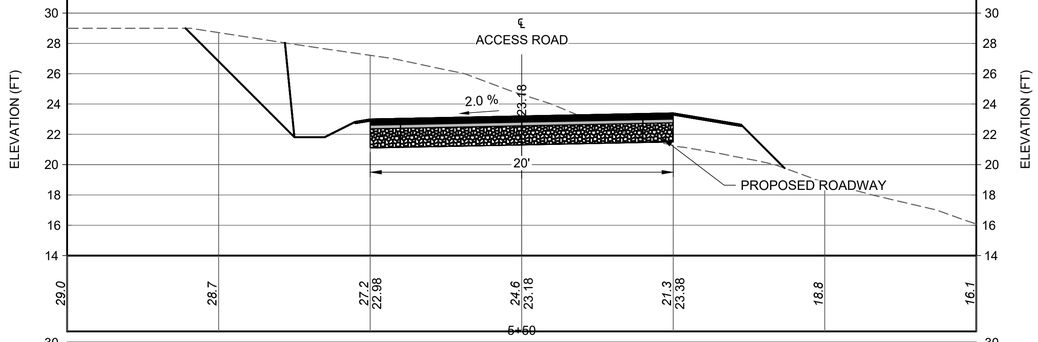

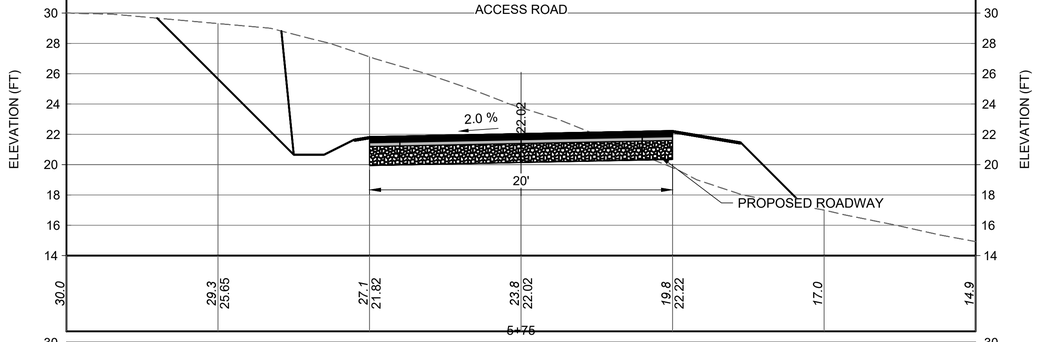

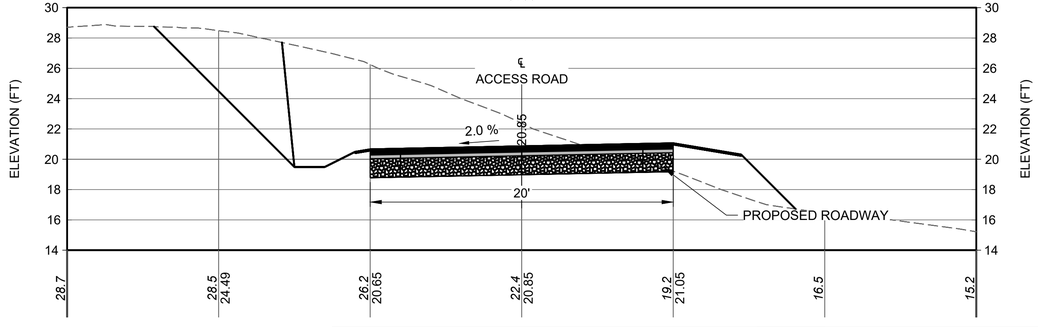

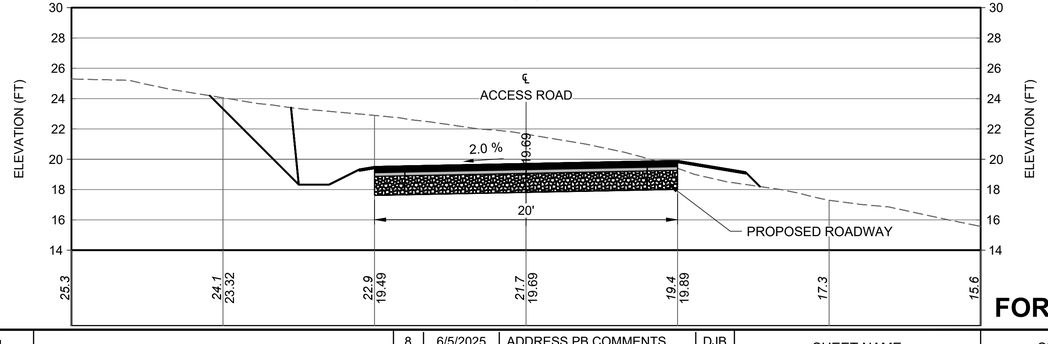

FOR PERMIT

Attention:

0 1"

If this scale bar does not measure 1" then drawing is not original scale.

0 2.5 5 10

SCALE, FEET

STATE OF MAINE
BRIAN M. MCDEVITT
PE18260
LICENSED
PROFESSIONAL ENGINEER

6/9/2025

Designed:	DJB
Drawn:	JAM
Checked:	BJB
Approved:	BMM
P.E. No:	13033
GEI Project	2203703

GEI Consultants
GEI CONSULTANTS, INC.
5 MILK STREET
PORTLAND, ME 04101
(207)797-8901

UNE
UNIVERSITY OF NEW ENGLAND

11 HILLS BEACH RD.
BIDDEFORD, MAINE

UNIVERSITY OF NEW ENGLAND MARINE SCIENCE CENTER PIER

11 HILLS BEACH ROAD
BIDDEFORD, YORK COUNTY, MAINE

NO	DATE	ISSUE/REVISION	APP
8	6/5/2025	ADDRESS PB COMMENTS	DJB
7	4/16/2025	BIDDEFORD PERMIT APP.	DJB
6	9/17/2024	REVISED PERMIT SET	DJB
5	6/27/2024	REVISED PERMIT SET	DJB
4	9/14/2023	DEP PERMIT SET	DJB
3	6/28/2023	75% DESIGN SUBMISSION	DJB
2	2/15/2023	30% DESIGN SUBMISSION	DJB
1	12/9/2022	15% DESIGN SUB REV	DJB
0	11/11/2022	15% DESIGN SUBMISSION	DJB

SHEET NAME

ROAD ACCESS SECTIONS STA 4+00 TO 5+75

SHEET NO.

C-010

DICASTELNUOVO, VINNIE \\geiconsultants.com\data\Data_Storage\Working\UNIVERSITY OF NEW ENGLAND\2203703 UNE Marine Science Center Pier\00_CAD\Design\Sheets\2203703-C-009 C-010.dwg - 6/9/2025

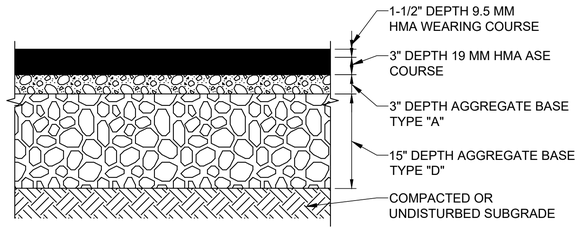

NOTES:
1. PAVEMENT DESIGN SHALL HAVE A MAINEDOT APPROVED JOB MIX FORMULA (JMF) WITHIN THE LATEST CALENDAR YEAR UNLESS OTHERWISE APPROVED BY OWNER.

1 HMA TRAVELWAY/SHOULDER TYPICAL SECTION

NO SCALE

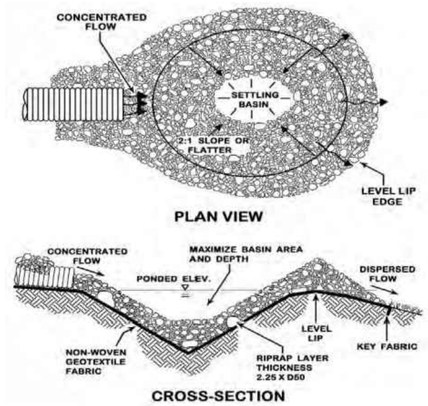

PLUNGE POOL SIZING (minimum)				
SIZE	RIPRAP SIZING (D_{50})	WIDTH At the narrow end of pipe	LENGTH For slow flows (no pressure head)	LENGTH For high flows (with pressure head)
12"	5"	3-4'	4-6'	8-10'
18"	8"	4-6'	6-8'	12-18'
24"	10"	6-8'	8-10'	18-22'
30"	12"	8-10'	12-14'	22-28'
36"	14"	10-12'	14-16'	28-32'

The diameter of the largest stone size in the mix should be about 1.5 times the D_{50} and the smallest one about one half the size. The thickness of riprap should never be less than 2 times the rock D_{50}.

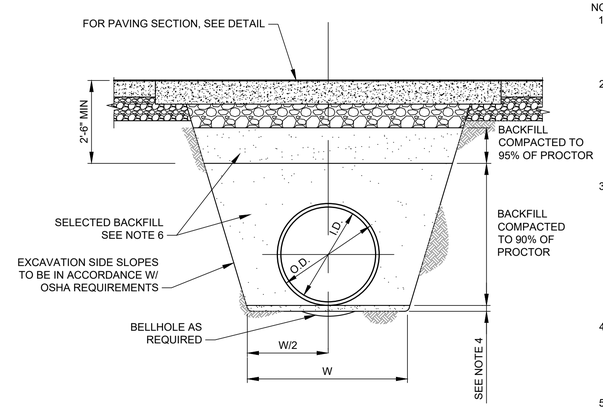

NOTES:
1. TRENCH BOTTOM OR BEDDING FOR ALL PIPE SHALL BE GRADED TO PROVIDE UNIFORM SUPPORT FOR THE ENTIRE LENGTH OF THE PIPE EXCEPT AT BELLHOLES.
2. BELLHOLES FOR PIPES SHALL HAVE A CLEARANCE OF 3" BETWEEN THE BOTTOM OF THE BELLHOLE AND THE EXTERIOR OF THE PIPE BARREL, BUT IN NO CASE SHALL BELLHOLES BE SMALLER THAN REQUIRED TO FACILITATE PLACING OF THE PIPE OR PROPER JOINING OF THE PIPE.
3. COMPACTION BACKFILL SHALL BE COMPACTED TO A DEGREE AT LEAST EQUIVALENT TO THE EXISTING DEGREE OF COMPACTING OF ADJACENT IN-PLACE EARTH MATERIALS AGAINST WHICH SUCH COMPACTED BACKFILL IS TO BE PLACED, OR TO A MIN OF 95% OF THE LABORATORY STANDARD MAX ASTM D698 DENSITY, WHICHEVER IS GREATER.
4. MIN 3" DEEP LAYER OF SCARIFIED MATERIAL WHEN IN HARD MATERIAL. IN UNSUITABLE MATERIAL, OVER EXCAVATE AS DIRECTED BY ENGINEER (6" MIN) AND REPLACE WITH COMPACTED BACKFILL.
5. W = PIPE O.D. + 24" MIN
6. ALL SELECTED BACKFILL IS TO BE IN CONFORMANCE WITH STATE STANDARD SPECIFICATION.

3 TRENCH

NO SCALE

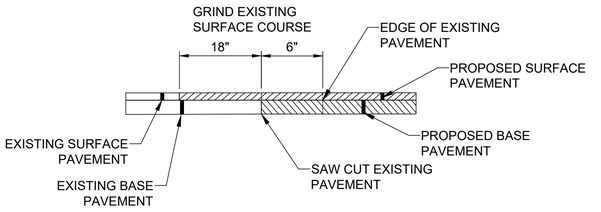

4 HMA PAVEMENT BUTT JOINT

NO SCALE

NOTES:
1. IF THE PIPE DISCHARGES ONTO A FLAT AREA, THE APRON SHOULD HAVE A WIDTH THAT IS THREE TIMES THE OUTLET PIPE'S DIAMETER. IF THE PIPE FLOWS HAVE THE POTENTIAL OF CAUSING A GULLY, A LEVEL SPREADER SHOULD BE PROVIDED.
2. THE CHANNEL SIDE SLOPES SHOULD BE NO STEEPER THAN 2:1. RIPRAP ON THE SIDES OF THE PLUNGE POOL SHOULD EXTEND TO THE TOP OF THE CHANNEL.
3. THE PLUNGE POOL SIZING AND THE MEDIAN SIZED RIPRAP CAN BE DETERMINED FROM THE FOLLOWING TABLE. THE THICKNESS OF RIPRAP SHOULD NOT BE LESS THAN 2 TIMES THE ROCK D50.
4. A GEOTEXTILE OR APPROPRIATE GRAVEL FILTER SHOULD BE USED TO PROTECT AGAINST PIPING OF SOIL FINES FROM BENEATH THE ROCK.
5. IN A CHANNEL THAT CAN BE REVEGETATED, SEED AND MULCH SHOULD BE APPLIED WITHIN 7 DAYS FROM FINAL CONSTRUCTION..

2 PLUNGE POOL

NO SCALE

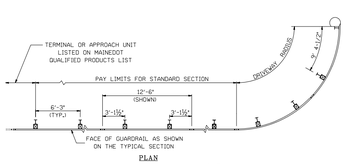

31" W-BEAM GUARDRAIL - MID-WAY SPLICE

Identification letters and numbers on drawings refer to the standard detail drawings shown in "A guide to Standardized Highway Barrier Hardware' by AASHTO-AGC-ARTBA Joint Committee.

GUARDRAIL
606(03)

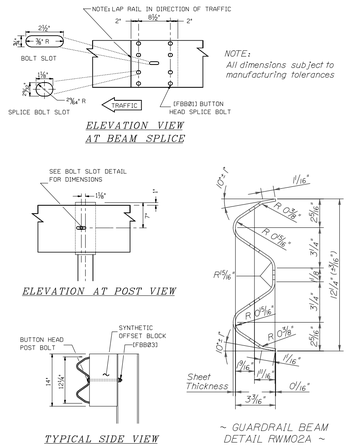

GUARDRAIL
606(04)

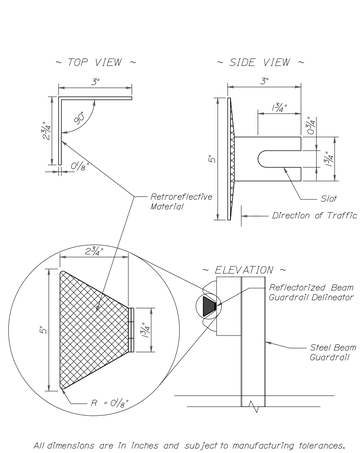

All dimensions are in inches and subject to manufacturing tolerances.

REFLECTORIZED BEAM GUARDRAIL DELINEATOR DETAILS
606(07)

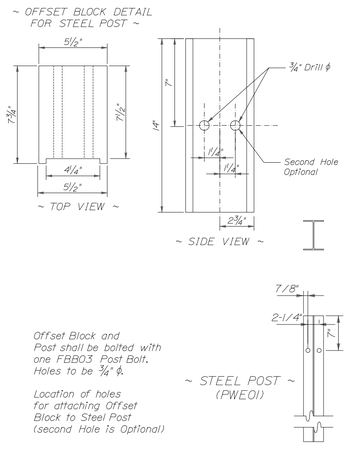

GUARDRAIL
606(06)

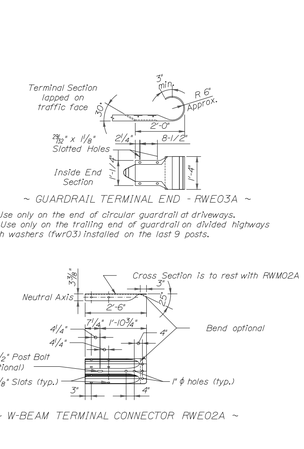

GUARDRAIL
606(05)

5 GUARD RAIL DETAILS

NO SCALE

FOR PERMIT

Attention:
0 1"
If this scale bar does not measure 1" then drawing is not original scale.

STATE OF MAINE — BRIAN M. MCDEVITT — PE18260 — LICENSED PROFESSIONAL ENGINEER
6/9/2025

Designed:	DJB
Drawn:	JAM
Checked:	BJB
Approved:	BMM
P.E. No:	13033
GEI Project	2203703

GEI Consultants
GEI CONSULTANTS, INC.
5 MILK STREET
PORTLAND, ME 04101
(207)797-8901

UNIVERSITY OF NEW ENGLAND
11 HILLS BEACH RD.
BIDDEFORD, MAINE

UNIVERSITY OF NEW ENGLAND MARINE SCIENCE CENTER PIER
11 HILLS BEACH ROAD
BIDDEFORD, YORK COUNTY, MAINE

NO	DATE	ISSUE/REVISION	APP
8	6/5/2025	ADDRESS PB COMMENTS	DJB
7	4/16/2025	BIDDEFORD PERMIT APP.	DJB
6	9/17/2024	REVISED PERMIT SET	DJB
5	6/27/2024	REVISED PERMIT SET	DJB
4	9/14/2023	DEP PERMIT SET	DJB
3	6/28/2023	75% DESIGN SUBMISSION	DJB
2	2/15/2023	30% DESIGN SUBMISSION	DJB
1	12/9/2022	15% DESIGN SUB REV	DJB
0	11/11/2022	15% DESIGN SUBMISSION	DJB

SHEET NAME: **SITE DETAILS**

SHEET NO.: **C-011**

DICASTELNUOVO, VINNIE \\geiconsultants.com\data\Data_Storage\Working\UNIVERSITY OF NEW ENGLAND\2203703 UNE Marine Science Center Pier\00_CAD\Design\Sheets\2203703-C-DETAILS.dwg - 6/9/2025

EROSION AND SEDIMENTATION CONTROL NOTES:

INTRODUCTION

THE FOLLOWING PLAN FOR CONTROLLING SEDIMENTATION AND EROSION IN THIS PROJECT IS BASED ON CONSERVATION PRACTICES FOUND IN THE MAINE EROSION & SEDIMENT CONTROL BMPS MANUAL, OCTOBER 2016, AND MAINE EROSION AND SEDIMENT CONTROL PRACTICE FIELD GUIDE FOR CONTRACTORS, REVISED 2014, MAINE DEPARTMENT OF ENVIRONMENTAL PROTECTION. THE CONTRACTOR WHO IMPLEMENTS THIS PLAN SHALL BE FAMILIAR WITH THESE PUBLICATIONS AND ADHERE TO THEM AND THE PRACTICES PRESENTED HEREIN REFERENCE IS MADE TO THE EROSION CONTROL PLANS AND DETAILS (C-005 AND C-013) WITHIN THE PLAN SET, SHOWING THE LOCATIONS AND TYPES OF PROPOSED MEASURES TO BE IMPLEMENTED.

GENERAL EROSION AND SEDIMENTATION CONTROL NOTES:

1. EROSION AND SEDIMENTATION CONTROL MEASURES ARE PROPOSED TO CONTROL ACCELERATED EROSION AND SEDIMENTATION AND REDUCE ADVERSE IMPACTS FROM RUNOFF AND EROSION AT THE WORK SITE.
2. APPLICATION OF TEMPORARY AND PERMANENT EROSION CONTROL MEASURES SHALL BE IN ACCORDANCE WITH THE LATEST EDITION OF THE MAINE EROSION AND SEDIMENT CONTROL BMP'S PUBLISHED BY MAINE DEP AND AVAILABLE AT: HTTPS://WWW.MAINE.GOV/DEP/LAND/EROSION/ESCBMPS/
3. THE WORK SHALL BE PERFORMED BY A CONTRACTOR THAT IS CERTIFIED BY MAINE DEP IN EROSION AND SEDIMENT CONTROL MEASURES. A CERTIFIED INDIVIDUAL SHALL BE ONSITE DURING ALL CONSTRUCTION ACTIVITY.
4. EROSION AND SEDIMENTATION DUE TO RUNOFF, TIDAL EXPOSURE, AND WAVE ACTION SHALL BE CONTROLLED BY STAGING CONSTRUCTION ACTIVITY TO MINIMIZE AREA AND TIME OF DISTURBANCE, APPLICATION OF SILT FENCE, BARRIERS, AND OTHER EROSION CONTROL MEASURES, AND PRESERVING NATURAL VEGETATION WHENEVER POSSIBLE.
5. THE CONTRACTOR'S SEQUENCE OF OPERATIONS AND SCHEDULE FOR WORK ACTIVITIES SHALL ACT TO MINIMIZE EXPOSURE TO EROSION.
6. THE CONTRACTOR SHALL TAKE CARE TO LIMIT THE AREA OF SOIL DISTURBANCE TO THE MINIMUM NECESSARY TO COMPLETE THE WORK.
7. EROSION CONTROL MEASURES, SEEDING, AND VEGETATION SHALL BE INSPECTED WEEKLY AND AFTER RAINSTORMS, RUNOFF EVENTS, AND STORM EVENTS UNTIL FINAL ACCEPTANCE. REPAIRS SHALL BE MADE WHEN NO LONGER SERVICEABLE DUE TO DAMAGE OR ACCUMULATION OF SEDIMENT.
8. AT THE COMPLETION OF CONSTRUCTION, ALL DISTURBED AREAS SHALL BE RESTORED TO THEIR ORIGINAL CONDITION AND CONTOUR, UNLESS OTHERWISE INDICATED ON THE PLANS.

GENERAL EROSION AND SEDIMENTATION CONTROL PRACTICES

THE FOLLOWING IS A LIST OF GENERAL EROSION CONTROL PRACTICES THAT WILL BE USED TO PREVENT EROSION AND SEDIMENTATION BEFORE, DURING AND AFTER THE CONSTRUCTION OF THIS PROJECT. IN ADDITION, SPECIAL CARE SHALL BE USED AT ALL TIMES TO:

LIMIT DISTURBANCE AND, HENCE, EROSION

1. CORRECT ANY EROSION PROBLEMS IMMEDIATELY.
2. REGULARLY MONITOR THE IMPLEMENTED PRACTICES, ESPECIALLY AFTER EVERY RAINFALL.
3. REVEGETATE DISTURBED AREAS AS SOON AS POSSIBLE AFTER CONSTRUCTION.
4. CONFORM TO ALL REQUIREMENTS/STANDARDS OF THE SITE'S MAINE DEP EROSION & SEDIMENT CONTROL BMP MANUAL.

SILT FENCE AND/OR EROSION CONTROL MIX SEDIMENT BARRIERS

SILT FENCE AND/OR EROSION CONTROL MIX SEDIMENT BARRIERS WILL BE INSTALLED ALONG THE DOWN GRADIENT SIDE OF THE PROPOSED GROUND DISTURBANCE AREAS PRIOR TO ANY CONSTRUCTION ACTIVITIES WHERE SLOPES EXCEED 8% OR THERE IS FLOWING WATER BOTH SILT FENCE AND EROSION CONTROL MATTING BERMS SHALL BE USED.

CATCH BASIN PROTECTION

CATCH BASIN PROTECTION WILL BE INSTALLED AT THE FIRST DOWNGRADIENT CATCH BASIN IN STREET ADJACENT TO ANY CONSTRUCTION ACTIVITIES AND IN ALL ONSITE CATCH BASINS UNTIL SITE HAS BEEN COMPLETELY STABILIZED.

CONSTRUCTION PHASE

THE FOLLOWING GENERAL PRACTICES WILL BE IMPLEMENTED TO PREVENT EROSION DURING CONSTRUCTION ON THIS PROJECT:

1. EROSION AND SEDIMENTATION CONTROL BMPS SHALL BE INTALLED PRIOR TO THE COMMENCEMENT OF EARTHWORK ACTIVITIES.
2. ONLY THOSE AREAS UNDER ACTIVE CONSTRUCTION WILL BE CLEARED AND LEFT IN AN UNTREATED OR UNVEGETATED CONDITION. AN AREA NO LARGER THAN WHAT CAN BE MULCHED IN ONE DAY MAY BE OPEN AT ONCE. ONCE CONSTRUCTION OF AN AREA IS COMPLETE, FINAL GRADING, LOAMING AND SEEDING SHALL OCCUR IMMEDIATELY (REFER TO "POST CONSTRUCTION REVEGETATION" SECTION). IF DURING FINAL GRADING, LOAMING AND SEEDING CAN NOT OCCUR IMMEDIATELY, IT SHALL BE DONE PRIOR TO ANY STORM EVENT AND WITHIN 15 DAYS OF COMPLETING CONSTRUCTION IN THE AREA. IF FINAL GRADING, LOAMING AND SEEDING CANNOT OCCUR WITHIN 7 DAYS, OR IF THE AREA IS NOT UNDER ACTIVE CONSTRUCTION FOR A PERIOD LONGER THAN 7 DAYS, SEE ITEM NO. 4 BELOW.
3. PRIOR TO THE START OF CONSTRUCTION IN A SPECIFIC AREA, SILT FENCING SHALL BE INSTALLED ON DOWNGRADIENT PORTIONS OF THE SITE AS LOCATED ON THE PLANS TO PROTECT AGAINST ANY CONSTRUCTION RELATED EROSION.
4. TOPSOIL WILL BE STOCKPILED WHEN NECESSARY IN AREAS WHICH HAVE MINIMUM POTENTIAL FOR EROSION AND WILL BE KEPT AS FAR AS POSSIBLE FROM EXISTING DRAINAGE AREAS AND WETLANDS. ALL STOCKPILES EXPECTED TO REMAIN LONGER THAN 7 DAYS SHALL BE:
   A. TREATED WITH ANCHORED MULCH (WITHIN 5 DAYS OF THE LAST DEPOSIT OF STOCKPILED SOIL).
   B. SEEDED WITH CONSERVATION MIX AND MULCHED IMMEDIATELY.
   C. STOCKPILES SHALL BE EITHER PLACED UPHILL OF AN EXISTING SEDIMENT BARRIER ON THE SITE OR ENCIRCLED BY A HAY BALE OR SILT FENCE BARRIER THE FIRST DAY THAT STOCKPILING COMMENCES.
5. ALL DISTURBED AREAS EXPECTED TO REMAIN LONGER THAN 7 DAYS SHALL BE:
   A. TREATED WITH STRAW AT A RATE OF 70-90 LBS. PER 1000 SQUARE FEET FROM 4/16 TO 10/1, OR AT A RATE OF 150-200 LBS. PER 1000 SQUARE FEET FROM 10/1 TO 4/15.
   B. SEEDED WITH CONSERVATION MIX OF PERENNIAL RYE GRASS (1.0 LBS/1000 SQ.FT.) AND MULCHED IMMEDIATELY. FROM 10/1 TO 4/15, FOLLOW THE SEEDING RATES AS OUTLINED BELOW IN SUB-SECTION 4.D. OF THE "POST CONSTRUCTION REVEGETATION" SECTION.
   C. MONITORED EVERY TWO WEEKS UNTIL SEEDING CAN OCCUR AND REMULCHED AS NEEDED TO PROTECT SLOPES.
6. ALL GRADING WILL BE HELD TO A MAXIMUM 3:1 SLOPE WHERE PRACTICAL. GREATER SLOPES MAY BE USED WHERE THE BANKS ARE PROTECTED WITH SOFT ARMOUR MATTING, EROSION CONTROL MATTING, OR RIPRAP. ALL SLOPES WILL BE STABILIZED WITH PERMANENT SEEDING IMMEDIATELY AFTER FINAL GRADING IS COMPLETE. (IT IS UNDERSTOOD THAT IMMEDIATELY MEANS WITHIN 5 DAYS OF THE COMPLETION OF WORK. SEE POST-CONSTRUCTION REVEGETATION FOR SEEDING SPECIFICATION).
7. APPLICATION RATE MUST BE 2 BALES (70-90 LBS.) PER 1,000 SQUARE FEET OR 1.5 TO 2 TONS (90-100 BALES) PER ACRE TO COVER 75 TO 90% OF THE GROUND SURFACE. DRIVE OVER WITH TRACKED CONSTRUCTION EQUIPMENT ON GRADES OF 5% AND LESS.
8. CONSTRUCTION TRAFFIC WILL BE DIRECTED OVER THE EXISTING SITE ENTRANCE. THE ROAD SHALL BE SWEPT AND VACUUMED DAILY SHOULD SEDIMENT BE TRACKED ONTO IT.
9. ALL AREAS DRAINING TO A STORMWATER FILTER OR BMP SHALL BE STABILIZED PRIOR TO CONSTRUCTION OF FILTER MEDIA TO PREVENT SEDIMENT FROM CLOGGING MEDIA.

DEWATERING

1. ALL DEWATERING DISCHARGE LOCATIONS SHALL BE LOCATED ON RELATIVELY FLAT GROUND AT LEAST 75' FROM STREAMS AND 25' FROM WETLANDS. THE CONTRACTOR SHALL UTILIZE DIRTBAGS, EROSION CONTROL MIX BERMS, OR SIMILAR METHODS FOR FILTRATION OF DEWATERING AND SHALL CONFORM TO THE MAINE EROSION AND SEDIMENT CONTROL BMPS G-1, G-2, AND G-3.

POST CONSTRUCTION REVEGETATION

THE FOLLOWING GENERAL PRACTICES WILL BE IMPLEMENTED TO PREVENT EROSION AS SOON AS AN AREA IS READY TO UNDERGO FINAL GRADING:

1. A MINIMUM OF 6" OF LOAM WILL BE SPREAD OVER DISTURBED AREAS AND GRADED TO A UNIFORM DEPTH AND NATURAL APPEARANCE.
2. LAWN AREAS: "PARK MIX" GRASS SEED BY ALLEN, STERLING & LOTHROP (FALMOUTH, MAINE), OR APPROVED EQUAL.
3. MULCH SHALL BE HAY OR STRAW MULCHES THAT ARE DRY AND FREE FROM UNDESIRABLE SEEDS AND COURSE MATERIALS.
   A. APPLICATION RATE MUST BE 2 BALES (70-90 LBS.) PER 1,000 SQUARE FEET OR 1.5 TO 2 TONS (90-100 BALES) PER ACRE TO COVER 75 TO 90% OF THE GROUND SURFACE.
   B. DRIVE OVER WITH TRACKED CONSTRUCTION EQUIPMENT ON GRADES OF 5% AND LESS.
   C. BLANKET WITH TACKED PHOTODEGRADABLE/BIODEGRADABLE NETTING ON GRADES GREATER THAN 5%.
4. HYDRO-MULCH SHALL CONSIST OF A MIXTURE OF ASPHALT, WOOD FIBRE OR PAPER FIBRE AND WATER, WHICH IS SPRAYED OVER A SEEDED AREA. HYDRO-MULCH SHALL NOT BE USED BETWEEN 10/1 AND 4/15.
5. CONSTRUCTION SHALL BE PLANNED TO ELIMINATE THE NEED FOR SEEDING BETWEEN OCTOBER 1ST AND APRIL 15TH. SHOULD SEEDING BE NECESSARY BETWEEN THESE DATES, THE FOLLOWING PROCEDURE SHALL BE FOLLOWED:
   A. ONLY UNFROZEN LOAM SHALL BE USED.
   B. LOAMING, SEEDING AND MULCHING WILL NOT BE DONE OVER SNOW OR ICE COVER. IF SNOW EXISTS, IT MUST BE REMOVED PRIOR TO PLACEMENT OF SEED.
   C. WHERE PERMANENT SEEDING IS NECESSARY, ANNUAL WINTER RYE (1.2 LBS/1000 S.F.) SHALL BE SOWN INSTEAD OF THE PREVIOUSLY NOTED SEEDING RATE.
   D. WHERE TEMPORARY SEEDING IS REQUIRED, ANNUAL WINTER RYE (2.5 LBS/1000 S.F.) SHALL BE SOWN INSTEAD OF THE PREVIOUSLY NOTED SEEDING RATE.
   E. FERTILIZING, SEEDING AND MULCHING SHALL BE DONE ON LOAM THE DAY THE LOAM IS SPREAD.
   F. HAY MULCH SHALL BE SECURED WITH PHOTODEGRADABLE/BIODEGRADABLE NETTING. TRACKING BY MACHINERY ALONE WILL NOT SUFFICE. WINTER MULCHING RATES, SHALL BE DOUBLE AS SPECIFIED ABOVE IN SUBSECTION 3.A OF THE "POST CONSTRUCTION REVEGETATION" SECTION, SHOULD BE APPLIED DURING THIS PERIOD.
6. FOLLOWING FINAL SEEDING, THE SITE WILL BE INSPECTED EVERY 30 DAYS UNTIL 90% COVER HAS BEEN ESTABLISHED. RESEEDING WILL BE CARRIED OUT BY THE CONTRACTOR WITHIN 10 DAYS OF NOTIFICATION BY THE DESIGN PROFESSIONAL THAT THE EXISTING CATCH IS INADEQUATE.

MONITORING SCHEDULE

THE CONTRACTOR SHALL BE RESPONSIBLE FOR INSTALLING, MONITORING, MAINTAINING, REPAIRING, REPLACING AND REMOVING ALL OF THE EROSION AND SEDIMENTATION CONTROLS OR APPOINTING A QUALIFIED SUBCONTRACTOR TO DO SO. MAINTENANCE MEASURES WILL BE APPLIED AS NEEDED DURING THE ENTIRE CONSTRUCTION CYCLE. IMMEDIATELY FOLLOWING ANY SIGNIFICANT RAINFALL, AND AT LEAST ONCE A WEEK, A VISUAL INSPECTION WILL BE MADE OF ALL EROSION AND SEDIMENTATION CONTROLS AS FOLLOWS:

1. SILT FENCE SHALL BE INSPECTED AND REPAIRED. SEDIMENT TRAPPED BEHIND THESE BARRIERS SHALL BE EXCAVATED WHEN IT REACHES A DEPTH OF 6" AND REDISTRIBUTED TO AREAS UNDERGOING FINAL GRADING.
2. CONSTRUCTION ENTRANCE SHALL BE VISUALLY INSPECTED AND REPAIRED AS NEEDED. ANY AREAS SUBJECT TO RUTTING SHALL BE STABILIZED IMMEDIATELY. IF THE VOIDS OF THE CONSTRUCTION ENTRANCE BECOME FILLED WITH MUD, MORE CRUSHED STONE SHALL BE ADDED AS NEEDED. THE PUBLIC ROADWAY SHALL BE SWEPT AND VACUUMED SHOULD MUD BE DEPOSITED/TRACKED ONTO THEM.

STANDARDS FOR STABILIZING SITES FOR THE WINTER

THE FOLLOWING STANDARDS AND METHODOLOGIES SHALL BE USED FOR STABILIZING THE SITE DURING THE WINTER CONSTRUCTION PERIOD:

1. STANDARD FOR THE TIMELY STABILIZATION OF DISTURBED SLOPES (ANY AREA HAVING A GRADE GREATER THAN 25%) - THE CONTRACTOR WILL SEED AND MULCH ALL SLOPES TO BE VEGETATED BY SEPTEMBER 15TH. IF THE CONTRACTOR FAILS TO STABILIZE ANY SLOPE TO BE VEGETATED BY SEPTEMBER 15TH, THEN THE CONTRACTOR WILL TAKE ONE OF THE FOLLOWING ACTIONS TO STABILIZE THE SLOPE FOR LATE FALL AND WINTER.
   A. STABILIZE THE SOIL WITH TEMPORARY VEGETATION AND EROSION CONTROL MATS: BY OCTOBER 1ST THE CONTRACTOR WILL SEED THE DISTURBED SLOPE WITH WINTER RYE AT A RATE OF 3 POUNDS PER 1000 SQUARE FEET AND THEN INSTALL EROSION CONTROL MATS OR ANCHORED HAY MULCH OVER THE SEEDING AT TWICE THE RATE AS SPECIFIED ABOVE IN SUBSECTION 3.A OF THE "POST CONSTRUCTION REVEGETATION" SECTION. THE CONTRACTOR WILL MONITOR GROWTH OF THE RYE OVER THE NEXT 30 DAYS.
   B. STABILIZE THE SLOPE WITH WOOD-WASTE COMPOST: THE CONTRACTOR WILL PLACE A SIX-INCH LAYER OF WOOD-WASTE COMPOST ON THE SLOPE BY NOVEMBER 15TH. THE CONTRACTOR WILL NOT USE WOOD-WASTE COMPOST TO STABILIZE SLOPES HAVING GRADES GREATER THAN 50% (2H:IV) OR HAVING GROUNDWATER SEEPS ON THE SLOPE FACE.
   C. STABILIZE THE SLOPE WITH STONE RIPRAP: THE CONTRACTOR WILL PLACE A LAYER OF STONE RIPRAP ON THE SLOPE BY NOVEMBER 15TH. THE DEVELOPMENT'S OWNER WILL HIRE A REGISTERED PROFESSIONAL ENGINEER TO DETERMINE THE STONE SIZE NEEDED FOR STABILITY ON THE SLOPE AND TO DESIGN A FILTER LAYER FOR UNDERNEATH THE RIPRAP.

STANDARD FOR THE TIMELY STABILIZATION OF DISTURBED SOILS - BY SEPTEMBER 15TH THE CONTRACTOR WILL SEED AND MULCH ALL DISTURBED SOILS ON THE SITE. IF THE CONTRACTOR FAILS TO STABILIZE THESE SOILS BY THIS DATE, THEN THE CONTRACTOR WILL TAKE ON OF THE FOLLOWING ACTIONS TO STABILIZE THE SOIL FOR LATE FALL AND WINTER.

   A. STABILIZE THE SOIL WITH TEMPORARY VEGETATION: BY OCTOBER 1ST THE CONTRACTOR WILL SEED THE DISTURBED SOIL WITH WINTER RYE AT A SEEDING RATE OF 3 POUNDS PER 1000 SQUARE FEET, LIGHTLY MULCH THE SEEDED SOIL WITH HAY OR STRAW AT 75 POUNDS PER 1000 SQUARE FEET, AND ANCHOR THE MULCH WITH PLASTIC NETTING. THE CONTRACTOR WILL MONITOR GROWTH OF THE RYE OVER THE NEXT 30 DAYS. IF THE RYE FAILS TO GROW AT LEAST THREE INCHES OR FAILS TO COVER AT LEAST 75% OF THE DISTURBED SOIL BEFORE NOVEMBER, 1, THEN THE CONTRACTOR WILL MULCH THE AREA FOR OVER-WINTER PROTECTION AS DESCRIBED IN ITEM III OF THIS STANDARD.
   B. STABILIZE THE SOIL WITH SOD: THE CONTRACTOR WILL STABILIZE THE DISTURBED SOIL WITH PROPERLY INSTALLED SOD BY OCTOBER 1ST. PROPER INSTALLATION INCLUDES THE CONTRACTOR PINNING THE SOD ONTO THE SOIL WITH WIRE PINS, ROLLING THE SOD TO GUARANTEE CONTACT BETWEEN THE SOD AND UNDERLYING SOIL, AND WATERING THE SOD TO PROMOTE ROOT GROWTH INTO THE DISTURBED SOIL.
   C. STABILIZE THE SOIL WITH MULCH: BY NOVEMBER 15TH THE CONTRACTOR WILL MULCH THE DISTURBED SOIL BY SPREADING HAY OR STRAW AT A RATE OF AT LEAST 150 POUNDS PER 1000 SQUARE FEET ON THE AREA SO THAT NO SOIL IS VISIBLE THROUGH THE MULCH. IMMEDIATELY AFTER APPLYING THE MULCH, THE CONTRACTOR WILL ANCHOR THE MULCH WITH NETTING OR OTHER METHOD TO PREVENT WIND FROM MOVING THE MULCH OFF THE DISTURBED SOIL.

EROSION CONTROL REMOVAL

AN AREA IS CONSIDERED STABLE IF IT IS PAVED OR IF 90% GROWTH OF PLANTED SEEDS IS ESTABLISHED. ONCE AN AREA IS CONSIDERED STABLE, THE EROSION CONTROL MEASURES CAN BE REMOVED AS FOLLOWS:

1. SILT FENCE: SILT FENCE SHALL BE DISPOSED OF LEGALLY AND PROPERLY OFF-SITE. ALL SEDIMENT TRAPPED BEHIND THESE CONTROLS SHALL BE DISTRIBUTED TO AN AREA UNDERGOING FINAL GRADING OR REMOVED AND RELOCATED OFF-SITE.
2. STABILIZED CONSTRUCTION ENTRANCE: THE STABILIZED CONSTRUCTION ENTRANCE SHALL BE REMOVED ONCE THE COMPACTED ROADWAY BASE IN IN PLACE. STONE AND SEDIMENT FROM THE CONSTRUCTION ENTRANCE SHALL BE REDISTRIBUTED TO AN AREA UNDERGOING GRADING OR REMOVED AND RELOCATED OFFSITE.
3. MISCELLANEOUS: ONCE ALL THE TRAPPED SEDIMENTS HAVE BEEN REMOVED FROM THE TEMPORARY SEDIMENTATION DEVICES THE DISTURBED AREAS MUST BE REGRADED IN AN AESTHETIC MANNER TO CONFORM TO THE SURROUNDING TOPOGRAPHY. ONCE GRADED THESE DISTURBED AREAS MUST BE LOAMED (IF NECESSARY), FERTILIZED, SEEDED AND MULCHED IN ACCORDANCE WITH THE RATES PREVIOUSLY STATED.

THE ABOVE EROSION CONTROLS MUST BE REMOVED WITHIN 30 DAYS OF FINAL STABILIZATION OF THE SITE. CONFORMANCE WITH THIS PLAN AND FOLLOWING THESE PRACTICES WILL RESULT IN A PROJECT THAT COMPLIES WITH THE STATE REGULATIONS AND THE STANDARDS OF THE NATURAL RESOURCES PROTECTION ACT, AND WILL PROTECT WATER QUALITY IN AREAS DOWNSTREAM ROM THE PROJECT.

MAINE CONSTRUCTION GENERAL PERMIT REQUIRED

SUBMISSION OF A MAINE CONSTRUCTION GENERAL PERMIT (MCGP) IS REQUIRED PRIOR TO COMMENCEMENT OF ANY EXCAVATION ACTIVITIES.

INSPECTION AND MAINTENANCE (APPENDIX B)

1. INSPECTION AND MAINTENANCE REQUIREMENTS: INSPECT DISTURBED AND IMPERVIOUS AREAS, EROSION AND STORMWATER CONTROL MEASURES, AREAS USED FOR STORAGE THAT ARE EXPOSED TO PRECIPITATION, AND LOCATIONS WHERE VEHICLES ENTER OR EXIT THE SITE. INSPECT THESE AREAS AT LEAST ONCE A WEEK AS WELL AS BEFORE AND AFTER A SIGNIFICANT STORM EVENT (0.5 INCHES OF RAINFALL IN A 24-HOUR PERIOD) AND PRIOR TO COMPLETION OF PERMANENT STABILIZATION MEASURES. A PERSON WITH KNOWLEDGE OF EROSION AND STORMWATER CONTROL, INCLUDING THE STANDARDS IN THE MCGP AND ANY DEPARTMENTAL COMPANION DOCUMENT TO THE MCGP, MUST CONDUCT THE INSPECTION. THIS PERSON MUST BE IDENTIFIED IN THE INSPECTION LOG. IF BEST MANAGEMENT PRACTICES (BMPS) NEED TO BE MODIFIED OR IF ADDITIONAL BMPS ARE NECESSARY, IMPLEMENTATION MUST BE STARTED BY THE END OF THE NEXT WORKIN DAY AND COMPLETED WITHIN 7 CALENDAR DAYS AND PRIOR TO ANY STORM EVENT (RAINFALL). ALL MEASURES MUST BE MAINTAINED IN EFFECTIVE OPERATING CONDITION UNTIL AREAS AREA PERMANENTLY STABILIZED. DOCUMENTATION OF CORRECTION ACTIONS SHALL BE MAINTAINED WITH THE INSPECTION FORMS.
2. INSPECTION LOG (REPORT): A LOG (REPORT) MUST BE KEPT SUMMARIZING THE SCOPE OF THE INSPECTION, NAME(S) AND QUALIFICATIONS OF THE PERSONNEL MAKING THE INSPECTION, THE DATE(S) OF THE INSPECTION, AND MAJOR OBSERVATIONS RELATING TO OPERATION OF EROSION AND SEDIMENTATION CONTROLS AND POLLUTION PREVENTION MEASURES. MAJOR OBSERVATIONS MUST INCLUDE BMPS THAT NEED MAINTENANCE, BMPS THAT FAILED TO OPERATE AS DESIGNED OR PROVED INADEQUATE FOR A PARTICULAR LOCATION, AND LOCATIONS(S) WHERE ADDITIONAL BMPS ARE NEEDED. FOR EACH BMP REQUIRING MAINTENANCE, BMP NEEDING REPLACEMENT, AND LOCATION NEEDING ADDITIONAL BMPS, NOTE IN THE INSPECTION LOG THE CORRECT ACTION TAKEN AND WHEN IT WAS TAKEN. THE LOG MUST BE MADE ACCESSIBLE TO THE DEPARTMENT STAFF AND A COPY MUST BE PROVIDED UPON REQUEST. THE PERMITTEE SHALL RETAIN A COPY OF THE LOG FOR A PERIOD OF AT LEAST THREE YEARS FROM THE COMPLETION OF THE PERMANENT STABILIZATION.

HOUSEKEEPING (APPENDIX C)

1. SPILL PREVENTION: CONTROLS MUST BE USED TO PREVENT POLLUTANTS FROM CONSTRUCTION AND WASTE MATERIALS STORED ON SITE TO ENTER STORMWATER, WHICH INCLUDES STORAGE PRACTICES TO MINIMIZE EXPOSURE OF THE MATERIALS TO STORMWATER. THE SITE CONTRACTOR OR OPERATOR MUST DEVELOP, AND IMPLEMENT AS NECESSARY, APPROPRIATE SPILL PREVENTION, CONTAINMENT, AND RESPONSE PLANNING MEASURES.

NOTE: ANY SPILL OR RELEASE OF TOXIC OR HAZARDOUS SUBSTANCES MUST BE REPORTED TO THE DEPARTMENT. FOR OIL SPILLS, CALL 1-800-482-0777 WHICH IS AVAILABLE 24 HOURS A DAY. FOR SPILLS OF TOXIC OR HAZARDOUS MATERIAL, CALL 1-800-452-4664 WHICH IS AVAILABLE 24 HOURS A DAY. FOR MORE INFORMATION, VISIT THE DEPARTMENT'S WEBSITE AT: HTTP://WWW.MAINE.GOV/DEP/SPILLS/EMERGSPILLRESP/

2. GROUNDWATER PROTECTION: DURING CONSTRUCTION, LIQUID PETROLEUM PRODUCTS AND OTHER HAZARDOUS MATERIALS WITH THE POTENTIAL TO CONTAMINATE GROUNDWATER MAY NOT BE STORED OR HANDLED IN AREAS OF THE SITE DRAINING TO AN INFILTRATION AREA. AN "INFILTRATION AREA" IS ANY AREA OF THE SITE THAT BY DESIGN OR AS A RESULT OF SOILS, TOPOGRAPHY AND OTHER RELEVANT FACTORS ACCUMULATES RUNOFF THAT INFILTRATES INTO THE SOIL. DIKES, BERMS, SUMPS, AND OTHER FORMS OF SECONDARY CONTAINMENT THAT PREVENT DISCHARGE TO GROUNDWATER MAY BE USED TO ISOLATE PORTIONS OF THE SITE FOR THE PURPOSES OF STORAGE AND HANDLING OF THESE MATERIALS. ANY PROJECT PROPOSING INFILTRATION OF STORMWATER MUST PROVIDE ADEQUATE PRE-TREATMENT OF STORMWATER PRIOR TO DISCHARGE OF STORMWATER TO THE INFILTRATION AREA, OR PROVIDE FOR TREATMENT WITHIN THE INFILTRATION AREA, IN ORDER TO PREVENT THE ACCUMULATION OF FINES, REDUCTION IN INFILTRATION RATE, AND CONSEQUENT FLOODING AND DESTABILIZATION.

NOTE: LACK OF APPROPRIATE POLLUTANT REMOVAL BEST MANAGEMENT PRACTICES (BMPS) MAY RESULT IN VIOLATIONS OF THE GROUNDWATER QUALITY STANDARD ESTABLISHED BY 38 M.R.S.A. §465-C(1).

3. FUGITIVE SEDIMENT AND DUST: ACTIONS MUST BE TAKEN TO ENSURE THAT ACTIVITIES DO NOT RESULT IN NOTICEABLE EROSION OF SOILS OR FUGITIVE DUST EMISSIONS DURING OR AFTER CONSTRUCTION. OIL MAY NOT BE USED FOR DUST CONTROL, BUT OTHER WATER ADDITIVES MAY BE CONSIDERED AS NEEDED. A STABILIZED CONSTRUCTION ENTRANCE (SCE) SHOULD BE INCLUDED TO MINIMIZE TRACKING OF MUD AND SEDIMENT. IF OFF-SITE TRACKING OCCURS, PUBLIC ROADS SHOULD BE SWEPT IMMEDIATELY AND NO LESS THAN ONCE A WEEK AND PRIOR TO SIGNIFICANT STORM EVENTS. OPERATIONS DURING DRY MONTHS, THAT EXPERIENCE FUGITIVE DUST PROBLEMS, SHOULD WET DOWN UNPAVED ACCESS ROADS ONCE A WEEK OR MORE FREQUENTLY AS NEEDED WITH A WATER ADDITIVE TO SUPPRESS FUGITIVE SEDIMENT AND DUST.

NOTE: DEWATERING A STREAM WITHOUT A PERMIT FROM THE DEPARTMENT MAY VIOLATE STATE WATER QUALITY STANDARDS AND THE NATURAL RESOURCES PROTECTION ACT.

4. DEBRIS AND OTHER MATERIALS: MINIMIZE THE EXPOSURE OF CONSTRUCTION DEBRIS, BUILDING AND LANDSCAPING MATERIALS, TRASH, FERTILIZERS, PESTICIDES, HERBICIDES, DETERGENTS, SANITARY WASTE AND OTHER MATERIALS TO PRECIPITATION AND STORMWATER RUNOFF. THESE MATERIALS MUST BE PREVENTED FROM BECOMING A POLLUTANT SOURCE.

NOTE: TO PREVENT THESE MATERIALS FROM BECOMING A SOURCE OF POLLUTANTS, CONSTRUCTION AND POST-CONSTRUCTION ACTIVITIES RELATED TO A PROJECT MAY BE REQUIRED TO COMPLY WITH APPLICABLE PROVISION OF RULES RELATED TO SOLID, UNIVERSAL, AND HAZARDOUS WASTE, INCLUDING, BUT NOT LIMITED TO, THE MAINE SOLID WASTE AND HAZARDOUS WASTE MANAGEMENT RULES; MAINE HAZARDOUS WASTE MANAGEMENT RULES; MAINE OIL CONVEYANCE AND STORAGE RULES; AND MAINE PESTICIDE REQUIREMENTS.

5. EXCAVATION DEWATERING: EXCAVATION DEWATERING IS THE REMOVAL OF WATER FROM TRENCHES, FOUNDATIONS, COFFER DAMS, PONDS, AND OTHER AREAS WITHIN THE CONSTRUCTION AREA THAT RETAIN WATER AFTER EXCAVATION. IN MOST CASES THE COLLECTED WATER IS HEAVILY SILTED AND HINDERS CORRECT AND SAFE CONSTRUCTION PRACTICES. THE COLLECTED WATER REMOVED FROM THE PONDED AREA, EITHER THROUGH GRAVITY OR PUMPING, MUST BE SPREAD THROUGH NATURAL WOODED BUFFERS OR REMOVED TO AREAS THAT ARE SPECIFICALLY DESIGNED TO COLLECT THE MAXIMUM AMOUNT OF SEDIMENT POSSIBLE, LIKE A COFFERDAM SEDIMENTATION BASIN. AVOID ALLOWING THE WATER TO FLOW OVER DISTURBED AREAS OF THE SITE. EQUIVALENT MEASURES MAY BE TAKEN IF APPROVED BY THE DEPARTMENT.

NOTE: DEWATERING CONTROLS ARE DISCUSSED IN THE "MAINE EROSION AND SEDIMENT CONTROL BMPS, MAINE DEPARTMENT OF ENVIRONMENTAL PROTECTION."

6. AUTHORIZED NON-STORMWATER DISCHARGES: IDENTIFY AND PREVENT CONTAMINATION BY NON-STORMWATER DISCHARGES. WHERE ALLOWED NON-STORMWATER DISCHARGES EXIST, THEY MUST BE IDENTIFIED AND STEPS SHOULD BE TAKEN TO ENSURE THE IMPLEMENTATION OF APPROPRIATE POLLUTION PREVENTION MEASURES FOR THE NON-STORMWATER COMPONENT(S) OF THE DISCHARGE. AUTHORIZED NON-STORMWATER DISCHARGES ARE:.
   - DISCHARGES FROM FIREFIGHTING ACTIVITY;
   - FIRE HYDRANT FLUSHINGS;
   - VEHICLE WASHWATER IF DETERGENTS ARE NOT USED AND WASHING IS LIMITED TO THE EXTERIOR OF VEHICLES (ENGINE, UNDERCARRIAGE, AND TRANSMISSION WASHING IS PROHIBITED);
   - DUST CONTROL RUNOFF IN ACCORDANCE WITH PERMIT CONDITIONS AND APPENDIX (C)(3);
   - ROUTINE EXTERNAL BUILDING WASHDOWN, NOT INCLUDING SURFACE PAINT REMOVAL, THAT DOES NOT INVOLVE DETERGENTS;
   - PAVEMENT WASHWATER (WHERE SPILLS/LEAKS OF TOXIC OR HAZARDOUS MATERIALS HAVE NOT OCCURRED, UNLESS ALL SPILLED MATERIAL HAD BEEN REMOVED) IF DETERGENTS ARE NOT USED;
   - UNCONTAMINATED AIR CONDITIONING OR COMPRESSOR CONDENSATE;
   - UNCONTAMINATED GROUNDWATER OR SPRING WATER;
   - FOUNDATION OR FOOTER DRAIN-WATER WHERE FLOWS ARE NOT CONTAMINATED;
   - UNCONTAMINATED EXCAVATION DEWATERING (SEE REQUIREMENTS IN APPENDIX C(5));
   - POTABLE WATER SOURCES INCLUDING WATERLINE FLUSHINGS; AND
   - LANDSCAPE IRRIGATION
7. UNAUTHORIZED NON-STORMWATER DISCHARGES: THE DEPARTMENT'S APPROVAL UNDER THIS CHAPTER DOES NOT AUTHORIZE A DISCHARGE THAT IS MIXED WITH A SOURCE OF NON-STORMWATER, OTHER THAN THOSE DISCHARGES IN COMPLIANCE WITH APPENDIX C (6). SPECIFICALLY, THE DEPARTMENT'S APPROVAL DOES NOT AUTHORIZE DISCHARGES OF THE FOLLOWING:
   - WASTEWATER FROM THE WASHOUT OR CLEANOUT OF CONCRETE, STUCCO, PAINT, FORM RELEASE OILS, CURING COMPOUNDS OR OTHER CONSTRUCTION MATERIALS;
   - FUELS, OILS OR OTHER POLLUTANTS USED IN VEHICLE AND EQUIPMENT OPERATION AND MAINTENANCE;
   - SOAPS, SOLVENTS, OR DETERGENTS USED IN VEHICLE AND EQUIPMENT WASHING; AND
   - TOXIC OR HAZARDOUS SUBSTANCES FROM A SPILL OR OTHER RELEASE.

ADDITIONAL REQUIREMENTS: ADDITIONAL REQUIREMENTS MAY BE APPLIED ON A SITE-SPECIFIC BASIS.

CONSTRUCTION OVERSITE

THE APPLICANT WILL RETAIN THE SERVICES OF A PROFESSIONAL ENGINEER TO INSPECT THE CONSTRUCTION AND STABILIZATION FOR ALL STORMWATER MANAGEMENT STRUCTURES. IF NECESSARY, THE INSPECTING ENGINEER WILL INTERPRET THE POND'S CONSTRUCTION PLAN FOR THE CONTRACTOR. ONCE ALL STORMWATER MANAGEMENT STRUCTURES ARE CONSTRUCTED AND STABILIZED, THE INSPECTING ENGINEER WILL NOTIFY THE DEPARTMENT IN WRITING WITHIN 30 DAY

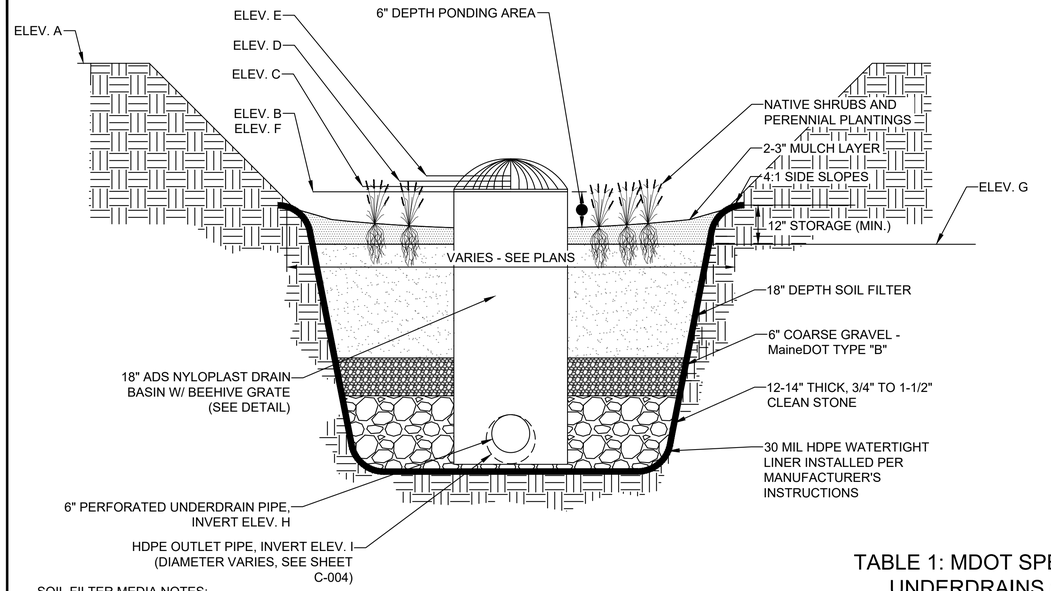

SOIL FILTER MEDIA NOTES:

SOIL FILTER MEDIA SHALL CONFORM TO MAINE DEP SOIL FILTER MEDIA OPTION 1, PER MAINE DEP STORMWATER BMP MANUAL CHAPTER 7.1. AS FOLLOWS:

1.1. SOIL FILTER MEDIA SHALL CONSIST OF A SILTY SAND SOIL OR SOIL MIXTURE COMBINED WITH A MATURE, MODERATELY FINE SHREDDED BARK OR WOOD FIBER MULCH.
1.2. THE RESULTING MIX SHALL CONTAIN NO LESS THAN 10% BY DRY WEIGHT ORGANIC MATERIAL.
1.3. THE RESULTING MIX SHALL CONTAIN 8% TO 12% PASSING THE NO. 200 SIEVE.
1.4. THE RESULTING MIX SHALL CONTAIN A MAXIMUM CLAY CONTENT OF 2%.

UNDERDRAIN OUTLET VALVE CALIBRATION NOTES:

AFTER THE COMPLETION OF INSTALLATION OF THE SOIL FILTER MEDIA, THE CONTRACTOR SHALL PERFORM THE FOLLOWING PROCEDURE TO CALIBRATE THE UNDERDRAIN OUTLET VALVE TO ACHIEVE THE 0.75"/HOUR DESIGN FLOW RATE.

1. BEGIN WITH VALVE HALF-OPEN.
2. CAREFULLY FLOOD THE BASIN UNTIL THERE IS 18" OF WATER STORED ABOVE THE SOIL FILTER MEDIA (UP TO THE HEIGHT OF OUTLET STRUCTURE RIM) WITHOUT CAUSING EROSION OF THE SOIL FILTER MEDIA.
3. RECORD THE TIME IT TAKES FOR THE 18" OF WATER TO DRAIN TO THE TOP OF THE SOIL FILTER MEDIA. THE TARGET DRAINDOWN TIME IS 24 HOURS.
4. IF THE 18" OF WATER DRAINS IN LESS THAN 24 HOURS, CLOSE THE VALVE SLIGHTLY AND REPEAT STEPS 2 & 3 ABOVE.
5. IF THE 18" OF WATER DRAINS IN MORE THAN 24 HOURS, OPEN THE VALVE SLIGHTLY AND REPEAT STEPS 2 & 3 ABOVE.
6. REPEAT THIS PROCESS UNTIL THE 18" OF WATER DRAINS IN 24 HOURS.

TABLE 1: MDOT SPECIFICATIONS FOR UNDERDRAINS (MDOT #703.22)

SIEVE SIZE	% BY WEIGHT
UNDERDRAIN TYPE B	
0'-1"	90-100
0'-0 1/2"	75-100
#4	50-100
#20	15-80
#50	0-15
#200	0-5

BIORETENTION FILTER CELL SCHEDULE

BIORETENTION FILTER CELL ID	EMBKMT. ELEV. [A]	WATER QUALITY STORM ELEV. [B]	2-YR STORM ELEV. [C]	10-YR STORM ELEV. [D]	25-YR STORM ELEV. [E]	TOP OF OUTLET STRUCT ELEV. [F]	BOTTOM OF STORAGE ELV. [G]	INTERIOR UNDERDRAIN INVERT (START) [H]	UNDERDRAIN OUTLET INVERT [I]	FILTER AREA (SQ. FT.)
SF-A	24.50	23.50	23.62	23.67	23.71	23.50	23.00	19.25	18.75	580
SF-B	18.50	18.00	18.11	18.16	18.19	18.00	17.50	14.25	13.75	890

2 BIORETENTION FILTER CELL

NO SCALE

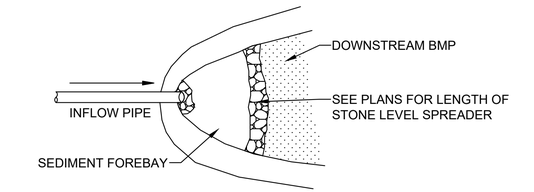

PLAN VIEW

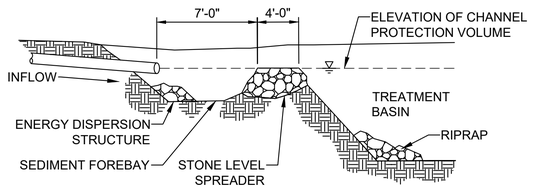

CROSS-SECTION

NOTES:

1. STONE SHALL BE AASHTO #3 STONE, UNIFORMLY GRADED, CLEAN.

3 LEVEL SPREADER DESIGN

NO SCALE

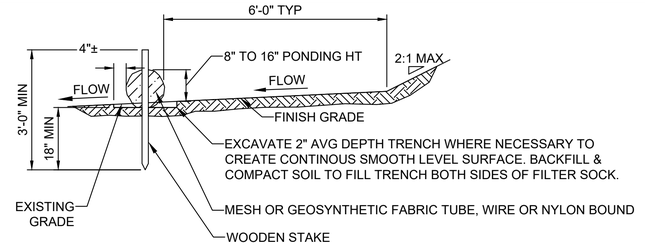

SECTION

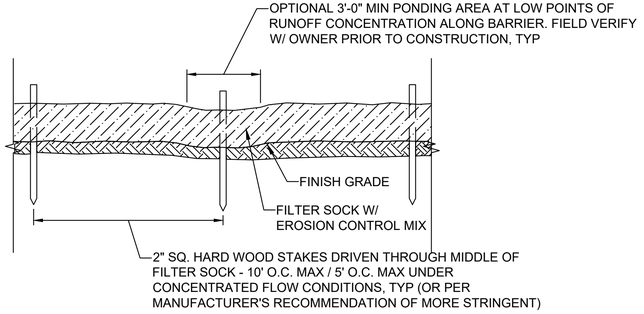

ELEVATION

NOTES:

1. FILTER SOCKS SHALL BE INSTALLED IN CONTINUOUS SEGMENT AND IN FULL CONTACT WITH THE GROUND ON A SMOOTH LEVEL SURFACE.
2. FOLLOW MANUFACTURER'S REQUIREMENTS FOR INSTALLATION, MAINTENANCE AND REMOVAL OF FILTER SOCK MATERIALS.
3. AREAS DISTURBED BY EROSION BARRIERS SHALL BE STABILIZED AFTER REMOVAL.

1 SEDIMENT BARRIER - FILTER SOCK

NO SCALE

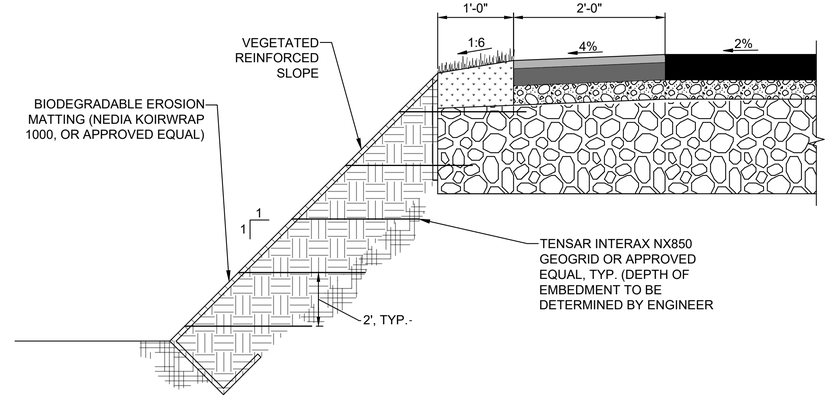

4 1:1 VEGETATED REINFORCED SLOPE

NO SCALE

FOR PERMIT

Attention:
0 1"
If this scale bar does not measure 1" then drawing is not original scale.

STATE OF MAINE
BRIAN M. MCDEVITT
PE18260
LICENSED PROFESSIONAL ENGINEER
6/9/2025

Designed:	DJB
Drawn:	JAM
Checked:	BJB
Approved:	BMM
P.E. No:	13033
GEI Project	2203703

GEI Consultants
GEI CONSULTANTS, INC.
5 MILK STREET
PORTLAND, ME 04101
(207)797-8901

UNIVERSITY OF NEW ENGLAND
11 HILLS BEACH RD.
BIDDEFORD, MAINE

UNIVERSITY OF NEW ENGLAND MARINE SCIENCE CENTER PIER
11 HILLS BEACH ROAD
BIDDEFORD, YORK COUNTY, MAINE

NO	DATE	ISSUE/REVISION	APP
8	6/5/2025	ADDRESS PB COMMENTS	DJB
7	4/16/2025	BIDDEFORD PERMIT APP.	DJB
6	9/17/2024	REVISED PERMIT SET	DJB
5	6/27/2024	REVISED PERMIT SET	DJB
4	9/14/2023	DEP PERMIT SET	DJB
3	6/28/2023	75% DESIGN SUBMISSION	DJB
2	2/15/2023	30% DESIGN SUBMISSION	DJB
1	12/9/2022	15% DESIGN SUB REV	DJB
0	11/11/2022	15% DESIGN SUBMISSION	DJB

SHEET NAME: **EROSION CONTROL DETAILS I**

SHEET NO.: **C-013**

DJCASTELNUOVO, VINNIE \\geiconsultants.com\data\Data_Storage\Working\UNIVERSITY OF NEW ENGLAND\2203703 UNE Marine Science Center Pier\00_CAD\Design\Sheets\2203703-C-DETAILS.dwg - 6/9/2025

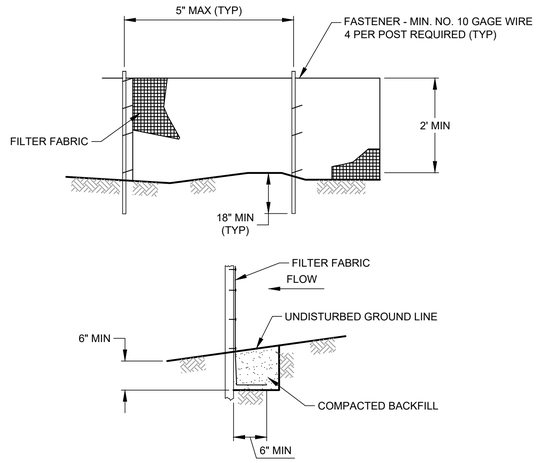

NOTES:
1. TEMPORARY SEDIMENT FENCE SHALL BE INSTALLED PRIOR TO ANY GRADING WORK IN THE AREA TO BE PROTECTED. THEY SHALL BE MAINTAINED THROUGHOUT THE CONSTRUCTION PERIOD AND REMOVED IN CONJUNCTION WITH THE FINAL GRADING AND SITE STABILIZATION.
2. FILTER FABRIC SHALL MEET THE REQUIREMENTS OF MATERIAL SPECIFICATION 592 GEOTEXTILE TABLE 1 OR 2, CLASS L WITH EQUIVALENT OPENING SIZE OF AT LEAST 30 FOR NONWOVEN AND 50 FOR WOVEN.
3. FENCE POSTS SHALL BE EITHER WOOD POST WITH A MINIMUM CROSS-SECTIONAL AREA OF 3 SQ. IN. OR A STANDARD STEEL POST.

5 SILT FENCE

NO SCALE

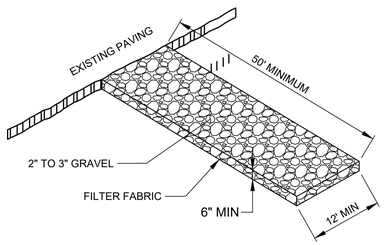

8 STABILIZED CONSTRUCTION ENTRANCE

NO SCALE

NOTES:
1. THE ENTRANCE/EXIT PAD SHOULD HAVE A LENGTH OF 50 FEET OR MORE AND A 12-FOOT MINIMUM WIDTH (OR AS APPROPRIATE TO CONTAIN THE WHEEL BASE OF CONSTRUCTION VEHICLES PLUS 3 FEET ON EITHER SIDE).
2. THE PAD SHOULD BE 6 INCHES OR MORE THICK WITH ANGULAR AGGREGATE (2-3 INCH DIAMETER). APPROPRIATE RECLAIMED CONCRETE MATERIAL MAY BE USED.
3. THE AGGREGATE SHOULD BE PLACED OVER A GEOTEXTILE FILTER TO PREVENT THE STONES FROM PUSHING INTO THE NATIVE SOIL.
4. AT THE BOTTOM OF SLOPES, A DIVERSION RIDGE SHOULD BE PROVIDED TO INTERCEPT RUNOFF.
5. BERMS MAY BE NECESSARY TO DIVERT WATER AROUND ANY EXPOSED SOIL, AND RUNOFF SHOULD BE DIRECTED TO A SEDIMENT TRAP.
6. THE WHEELS OF CONSTRUCTION EQUIPMENT MAY BE WASHED PRIOR TO EXITING THE SITE. WASHING SHOULD BE PERFORMED IN AN AREA THAT DRAINS TO A SEDIMENT TRAP OR BASIN.
7. THE PAD SHOULD BE INSPECTED WEEKLY, AND BEFORE AND AFTER EACH STORM. THE PAD MAY HAVE TO BE REPLACED IF THE VOIDS BECOME FILLED WITH SEDIMENT. STREET SWEEPING MAY BE NECESSARY

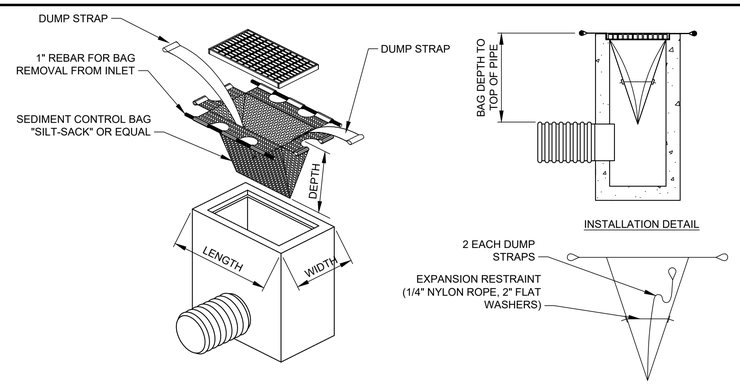

CB STYLE	LENGTH	WIDTH	DEPTH
TYPE 1 CB	2'-0"	1'-8"	VARIES
TYPCE 1 CCI	2'-5 1/2"	2'-0"	VARIES
USA G2	2'-8 1/2"	2'-3 1/2"	VARIES

NOTES:
1. THE DIMENSION CHART ABOVE IS FOR STANDARD CATCH BASINS AND INLETS ONLY. THE CONTRACTOR IS RESPONSIBLE FOR PROVIDING THE CORRECT SIZE DEVICE FOR EACH INLET.
2. FOR NON-STANDARD CATCH BASINS AND INLETS, THE CONTRACTOR SHALL MEASURE DIMENSIONS IN THE FIELD AND ORDER THE APPROPRIATE SIZE(S).
3. THE INLET SEDIMENT CONTROL DEVICE SHALL BE OF HIGH FLOW DESIGN (200 GAL/MIN/FT), AS PER THE MANUFACTURER'S SPECS.
4. THE SEDIMENT CONTROL DEVICE SHALL BE INSPECTED DAILY BY THE CONTRACTOR AND MAINTAINED A MINIMUM ONCE PER MONTH OR WITHIN THE 48 HOURS FOLLOWING A STORM EVENT. FILTER SHALL BE CLEANED IN A MANNER WHICH ENSURES THAT ALL SEDIMENT REMAINS ON SITE.
5. SUBSTITUTION OF A SHEET OF FILTER FABRIC PLACED OVER THE OPENING OF THE INLET IS NOT APPROVED.
6. RECESSED CURB INLET CATCH BASINS MUST BE BLOCKED WHEN USING FILTER FABRIC INLET SACKS, SIZE OF FILTER INLET SACK TO BE DETERMINED BY MANUFACTURER.
7. THE FILTER SHALL BE REPLACED OR CLEANED WHEN THE BAG BECOMES HALF FULL.
8. SEE INLET PROTECTION NOTES STD. DETAIL E3.

6 SILT SACK INLET PROTECTION

SCALE: N.T.S.

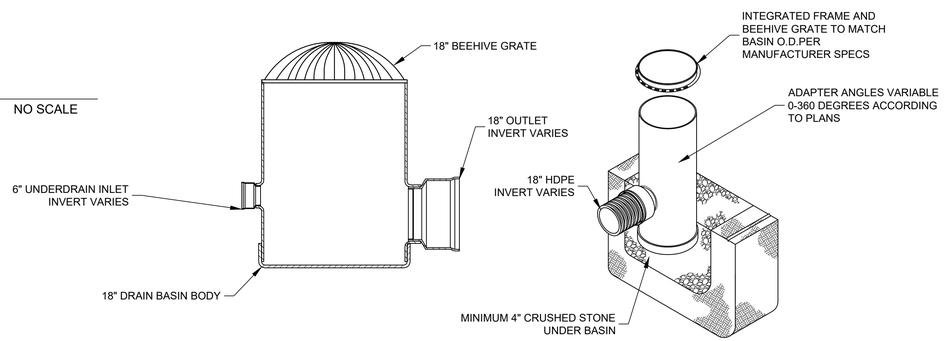

9 ADS NYLOPLAST 18"DRAIN BASIN W/BEEHIVE GRATE

NO SCALE

NOTES:
1. THE SOIL SURFACE SHOULD BE FINELY GRADED AND SMOOTH FOR THE BLANKET TO HAVE DIRECT CONTACT WITH THE SOIL AND TO PREVENT UNDERMINING. EROSION CONTROL BLANKETS PERFORM BEST ON LOAMY SOILS AND SHOULD NOT BE USED ON ROCKY SITES OR SHALLOW SOILS.
2. SEED SHOULD BE SOWN BEFORE INSTALLING THE EROSION CONTROL BLANKET.
3. ALWAYS UNROLL THE BLANKET DOWNHILL WITHOUT STRETCHING AND ANCHOR THE UPSLOPE EDGE IN A 12 INCH DEEP TRENCH THAT IS BACKFILLED AND TAMPED.
4. OVERLAP SHINGLE STYLE A MINIMUM OF 12 INCHES AT THE TOP OF EACH ROW AND 4 INCHES AT THE EDGES OF PARALLEL ROWS. ANCHOR ALONG THE OVERLAP WITH A MAXIMUM SPACING OF 3 FEET OR AS REQUIRED BY THE MANUFACTURER.

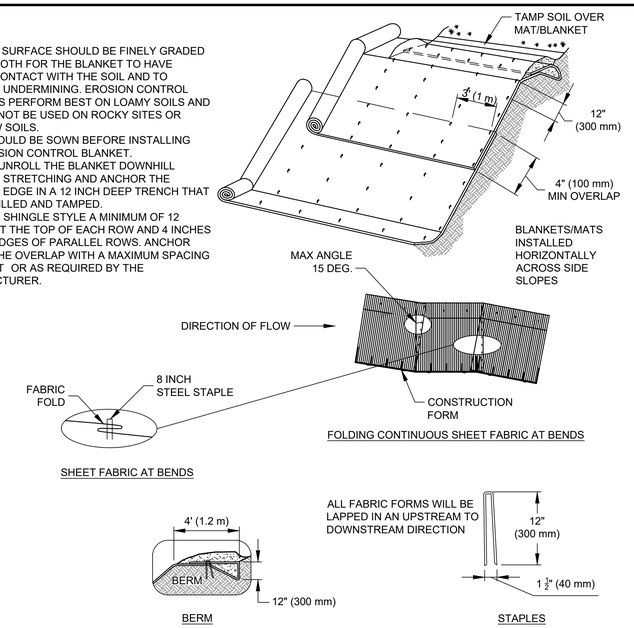

7 BIODEGRADABLE STABILIZATION MATTING

NO SCALE

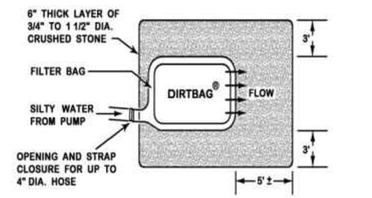

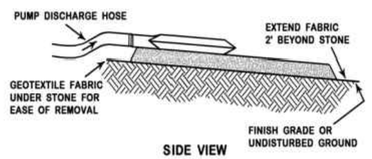

NOTES:
1. INSTALL THE FILTER BAG PRIOR TO INITIATING ANY ACTIVITIES WHICH WILL REQUIRE DEWATERING.
2. THE TYPE OF FABRIC SHOULD BE BASED ON THE SIZE OF SOIL PARTICLES TO BE TRAPPED (I.E. A WOVEN MATERIAL FOR COARSE PARTICLES AND A NONWOVEN MATERIAL FOR FINER PARTICLES).
3. A FILTER BAG SHOULD BE LOCATED IN AN AREA MOSTLY LEVEL (WITH LESS THAN 5% SLOPE). A PAD OF CRUSHED GRAVEL MAY BE PROVIDED.
4. AVOID DISCHARGING TO AN AREA THAT IS BARE OF VEGETATION OR NEWLY VEGETATED. ANY SIGN OF EROSION OR CHANNELIZATION FROM THE DISCHARGED WATER REQUIRES IMMEDIATELY CORRECTION.
5. FILTER BAGS HAVE A FINITE CAPACITY FOR SEDIMENT COLLECTION AND MAY BE PRONE TO PLUGGING. AVOID OVER-PRESSURIZING THE BAG OR IT MAY BURST.

10 GEOTEXTILE FILTER BAG

NO SCALE

FOR PERMIT

Attention:
0 1"
If this scale bar does not measure 1" then drawing is not original scale.

STATE OF MAINE
BRIAN M. MCDEVITT
PE18260
LICENSED
PROFESSIONAL ENGINEER
6/9/2025

Designed:	DJB
Drawn:	JAM
Checked:	BJB
Approved:	BMM
P.E. No:	13033
GEI Project	2203703

GEI Consultants
GEI CONSULTANTS, INC.
5 MILK STREET
PORTLAND, ME 04101
(207)797-8901

UNIVERSITY OF NEW ENGLAND
11 HILLS BEACH RD.
BIDDEFORD, MAINE

UNIVERSITY OF NEW ENGLAND
MARINE SCIENCE CENTER PIER
11 HILLS BEACH ROAD
BIDDEFORD, YORK COUNTY, MAINE

NO	DATE	ISSUE/REVISION	APP
8	6/5/2025	ADDRESS PB COMMENTS	DJB
7	4/16/2025	BIDDEFORD PERMIT APP.	DJB
6	9/17/2024	REVISED PERMIT SET	DJB
5	6/27/2024	REVISED PERMIT SET	DJB
4	9/14/2023	DEP PERMIT SET	DJB
3	6/28/2023	75% DESIGN SUBMISSION	DJB
2	2/15/2023	30% DESIGN SUBMISSION	DJB
1	12/9/2022	15% DESIGN SUB REV	DJB
0	11/11/2022	15% DESIGN SUBMISSION	DJB

SHEET NAME
EROSION CONTROL DETAILS II

SHEET NO.
C-014

DICASTELNUOVO, VINNIE \\geiconsultants.com\data\Data_Storage\Working\UNIVERSITY OF NEW ENGLAND\2203703 UNE Marine Science Center Pier\00_CAD\Design\Sheets\2203703-C-DETAILS.dwg - 6/9/2025

INSTALL (11) EASTERN RED CEDAR

INSTALL (11) BLACK SPRUCE

INSTALL (16) 'BAR HARBOR' JUNIPER

REINFORCED VEGETATIVE SLOPE (SEE DETAIL)

VEGETATE BIO RETENTION CELLS W/ RANDOM MIX OF 50 SHRUBS & 375 PERENNIALS - SEE C-16 FOR VEGETATION NOTES & PLANT SPECIES LIST

INSTALL (17) COMMON JUNIPER

INSTALL (9) AMERICAN HOPHORNBEAM

INSTALL (11) STAGHORN SUMAC

INSTALL (10) WHITE PINE

SEED ALL DISTURBED AREAS W/ NEW ENGLAND ROADSIDE MATRIX UPLAND SEED MIX UNLESS OTHERWISE NOTED, TYP

INSTALL (9) RED OAK

GIRARD MARINE SCIENCE CENTER (APPROX. 16,865 SF)

PLAN

SCALE: 1" = 20'

LEGEND:

- TREE TO BE REMOVED
- UNDISTURBED UPLAND AREAS (NON-STRUCTURES)
- DISTURBED UPLAND AREAS (NON-STRUCTURES)

NOTES:

1. FIELD VERIFY FINAL LOCATION OF ALL REMOVED AND INSTALLED PLANTS WITH ENGINEER PRIOR TO CONSTRUCTION.
2. DCD = DECIDUOUS TREE (SPECIES UNKNOWN)
3. EV= EVERGREEN TREE (SPECIES UNKNOWN)
4. 21 OUT OF 49 TOTAL TREES REMOVED ARE WITHIN THE 50-FT HAT SETBACK.
5. APPROXIMATELY 5,850 SF OF UNDERSTORY DUFF LAYER AND NON-NATIVE INVASIVE SHRUB HONEYSUCKLE (*LONICERA MORROWII*) WILL BE REMOVED WITHIN THE 50-FT HAT SETBACK.

FOR PERMIT

0 20 40

SCALE, FEET

Attention:

0 1"

If this scale bar does not measure 1" then drawing is not original scale.

STATE OF MAINE
BRIAN M. MCDEVITT
PE18260
LICENSED
PROFESSIONAL ENGINEER

6/9/2025

Designed:	DJB
Drawn:	JAM
Checked:	BJB
Approved:	BMM
P.E. No:	13033
GEI Project	2203703

GEI Consultants
GEI CONSULTANTS, INC.
5 MILK STREET
PORTLAND, ME 04101
(207)797-8901

UNE
UNIVERSITY OF NEW ENGLAND
11 HILLS BEACH RD.
BIDDEFORD, MAINE

UNIVERSITY OF NEW ENGLAND MARINE SCIENCE CENTER PIER
11 HILLS BEACH ROAD
BIDDEFORD, YORK COUNTY, MAINE

NO	DATE	ISSUE/REVISION	APP
8	6/5/2025	ADDRESS PB COMMENTS	DJB
7	4/16/2025	BIDDEFORD PERMIT APP.	DJB
6	9/17/2024	REVISED PERMIT SET	DJB
5	6/27/2024	REVISED PERMIT SET	DJB
4	9/14/2023	DEP PERMIT SET	DJB
3	6/28/2023	75% DESIGN SUBMISSION	DJB
2	2/15/2023	30% DESIGN SUBMISSION	DJB
1	12/9/2022	15% DESIGN SUB REV	DJB
0	11/11/2022	15% DESIGN SUBMISSION	DJB

SHEET NAME: **REVEGETATION PLAN**

SHEET NO.: **C-015**

DICASTELNUOVO, VINNIE B:\Working\UNIVERSITY OF NEW ENGLAND\2203703 UNE Marine Science Center Pier\00_CAD\Design\Sheet\2203703-C-015.dwg - 6/9/2025

VEGETATION GENERAL NOTES:

1. VEGETATION MANAGEMENT (INSTALLATION AND MAINTENANCE) SHALL COMPLY WITH CITY OF BIDDEFORD SHORELAND ZONING ORDINANCE REQUIREMENTS.
   - 1.1. ALL REVEGETATION MUST OCCUR ALONG THE SAME SEGMENT OF SHORELINE AND IN AS CLOSE OF PROXIMITY AS PRACTICAL TO THE LOCATION WHERE THE VEGETATION WAS REMOVED.
   - 1.2. ALL VEGETATION REMOVED MUST BE REPLACED WITH NATIVE, NON-INVASIVE SPECIES.
   - 1.3. AT LEAST THREE DIFFERENT SPECIES OF TREES AND WOODY VEGETATION UNDER THREE FEET IN HEIGHT SHALL BE USED.
   - 1.4. NO MORE THAN ONE SPECIES OF TREES AND WOODY VEGETATION UNDER THREE FEET IN HEIGHT SHALL MAKE UP MORE THAN 50% OF THE TOTAL NUMBER OF TREES AND WOOD VEGETATION UNDER THREE FEET IN HEIGHT PLANTED.
   - 1.5. SURVIVAL OF ALL VEGETATION MUST BE MAINTAINED FOR A MINIMUM OF FIVE YEARS.
2. ALL REMOVED NON-NATIVE PLANT MATERIAL SHALL BE PROPERLY DISPOSED OF BY BURNING ON-SITE OR DISPOSAL AT A WASTE RECEIVING FACILITY.
3. AN UPDATED LIST OF NON-NATIVE INVASIVE VEGETATION IS MAINTAINED BY THE DEPARTMENT OF AGRICULTURE, CONSERVATION AND FORESTRY'S NATURAL AREAS PROGRAM:
4. HTTPS://WWW.MAINE.GOV/DACF/MNAP/FEATURES/INVASIVE_PLANTS/INVASIVES.HTM
5. PLANT SPECIES SUBSTITUTIONS SHALL BE APPROVED BY THE OWNER. CONTRACTOR SHALL REFERENCE THE FOLLOWING RESOURCES FOR COASTAL PLANT LIST GUIDELINES: CUMBERLAND COUNTY SOIL & WATER CONSERVATION DISTRICT - COASTAL PLANTING GUIDE; UNIVERSITY OF MAINE COOPERATE EXTENSION; AND/OR THE WILD SEED PROJECT.

VEGETATION INSTALLATION NOTES:

1. THE CONTRACTOR SHALL TAKE CARE NOT TO DAMAGE VEGETATION WITHIN THE CONSTRUCTION AREA UNLESS NOTED TO BE REMOVED, LIMBED OR PRUNED. THIS MAY REQUIRE HAND EXCAVATION WITHIN TREE DRIPLINES.
2. ALL PLANT MATERIAL SELECTIONS SHALL BE APPROVED BY THE OWNER PRIOR TO INSTALLATION.
3. ALL NEW PLANTING MATERIAL SHALL CONFORM TO THE MINIMUM GUIDELINES ESTABLISHED FOR NURSERY STOCK PUBLISHED BY THE AMERICAN ASSOCIATION OF NURSERYMEN, INC. IN ADDITION ALL NEW PLANT MATERIAL FOR THE PROJECT SHALL BE OF THE HIGHEST SPECIMEN QUALITY.
4. ALL NEW PLANTS SHALL BE BALLED AND BURLAPPED OR CONTAINER GROWN UNLESS OTHERWISE NOTED ON THE PLANT LIST.
5. CONTRACTOR SHALL SUPPLY ALL NEW PLANT MATERIAL IN QUANTITIES SUFFICIENT TO COMPLETE THE PLANTING SHOWN ON THE DRAWINGS.
6. NO TREES SHALL BE PLANTED BEFORE ACCEPTANCE OF ROUGH GRADING. TREES SHALL BEAR SAME RELATIONSHIP TO FINISH GRADE AS THEY BORE TO PREVIOUS GRADE.
7. STAKE LOCATION OF ALL PROPOSED PLANTING FOR APPROVAL BY THE OWNER PRIOR TO COMMENCEMENT OF PLANTING.
8. ALL EXISTING TREES TO REMAIN SHALL BE PROPERLY PROTECTED, PRUNED AND FERTILIZED PER THE SPECIFICATIONS.
9. ALL LAWN AREAS DISTURBED BY CONSTRUCTION OPERATIONS INSIDE AND OUTSIDE THE LIMIT OF WORK SHALL BE LOAMED AND SEEDED AS SPECIFIED.
10. ALL PLANT BEDS ARE TO RECEIVE THREE INCHES (4") OF SHREDDED BARK MULCH AS SPECIFIED.
11. ANY PROPOSED SUBSTITUTIONS OF PLANT SPECIES SHALL BE MADE WITH PLANTS OF EQUIVALENT OVERALL FORM, HEIGHT, BRANCHING HABIT, FLOWER, LEAF, COLOR, FRUIT AND CULTURE ONLY AS APPROVED BY OWNER.
12. ALL AREAS TO BE SEEDED SHALL RECEIVE SOIL PREPARATION AS SPECIFIED PRIOR TO SEEDING, UNLESS OTHERWISE NOTED ON PLAN.
13. PREPARE ALL PLANT PITS WITH PLANTING SOIL TO A MINIMUM DEPTH MATCHING THE DEPTH OF ROOT BALLS.
14. NATIVE PLANT SPECIES REMOVED SHALL BE REPLANTED WITH IN-KIND SPECIES AND/OR THOSE PROVIDE IN THE PLANT LIST.

PLANT LIST

KEY	QTY	*SCIENTIFIC NAME* COMMON NAME	SIZE	SPACING	ROOTING	MATURE SIZE	NOTES
TREES							
CC	9	*CARPINUS CAROLINIANA* AMERICAN HORNBEAM	1" CAL	10' O.C.	B&B / CONT	25' HT / 25' W	REPLACE REMOVED TREES 1 FOR 1 AT LOCATIONS AS INDICATED ON THE REVEGETATION PLAN.
JV	10	*JUNIPERUS VIRGINIANA* EASTERN RED CEDAR	3'-4' HT	10' O.C.	B&B / CONT	35' HT / 15' W	
PM	10	*PICEA MARIANA* BLACK SPRUCE	5'-6' HT	10' O.C.	B&B / CONT	35' HT / 15' W	
PS	10	*PINUS STROBUS* WHITE PINE	6'-7' HT	15' O.C.	B&B / CONT	75' HT / 35' W	
QR	9	*QUERCUS RUBRA* RED OAK	1.5 - 2" CAL	25' O.C.	B&B / CONT	75' HT / 50' W	
SHRUBS							
JC	17	*JUNIPERUS COMMUNIS* COMMON JUNIPER	18"-24" HT	5' O.C.	CONT	10' HT / 10' W	PLANT SHRUBS AT LOCATIONS AS INDICATED ON THE REVEGETATION PLAN.
JH	16	*JUNIPERUS HORIZONTALS 'BAR HARBOR'* BAR HARBOR CREEPING JUNIPER	5-7 PPP	6' O.C.	CONT	1.5' HT / 10' W	
RT	11	*RHUS TYPHINA* STAGHORN SUMAC	18"-24" HT	10' O.C.	B&B / CONT	20' HT / 25' W	
BIORETENTION CELL PLANTING							
AS	75	*ASCLEPIAS SYRIACA* COMMON MILKWEED	5-7 PPP	18" O.C.	CONT	2' HT / 3' W	PROVIDE A RANDOM MIX OF EQUAL QUANTITIES OF EACH PERENNIAL AND SHRUB SPECIES THROUGHOUT BIO RETENTION CELLS. PLANT EACH SPECIES AS INDIVIDUALS OR IN GROUPINGS OF THREE.
IR	75	*IRIS VERSICOLOR* BLUE FLAG IRIS	5-7 PPP	18" O.C.	CONT	18"' HT / 2' W	
IV	25	*ILEX VERTICILLATA* WINTERBERRY	12"-18" HT	3' O.C.	CONT	8' HT / 8' W	
MP	25	*MYRICA PENSYLVANICA* NORTHERN BAYBERRY	12"-18" HT	3' O.C.	CONT	8' HT / 8' W	
PV	75	*PANICUM VIRGATUM* SWITCHGRASS	5-7 PPP	18" O.C.	CONT	3' HT / 2' W	
SN	75	*SYMPHYOTRICHUM NOVAE-ANGLIAE* NEW ENGLAND ASTER	5-7 PPP	18" O.C.	CONT	2' HT / 3' W	
SS	75	*SOLIDAGO SEMPERVIRENS* SEASIDE GOLDENROD	5-7 PPP	18" O.C.	CONT	2' HT / 3' W	
SEED MIX							
SOW NEW ENGLAND ROADSIDE MATRIX UPLAND SEED MIX ON ALL DISTURBED AREAS UNLESS OTHERWISE NOTED ON REVEGETATION PLAN.							

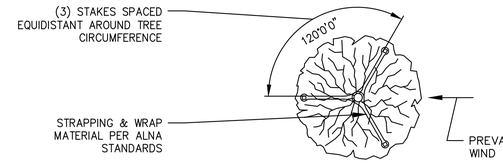

PLAN

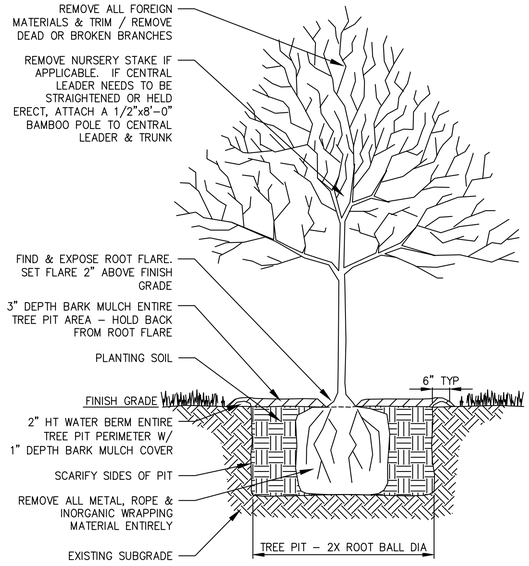

TREE INSTALLATION </= 10–FT

NOT TO SCALE

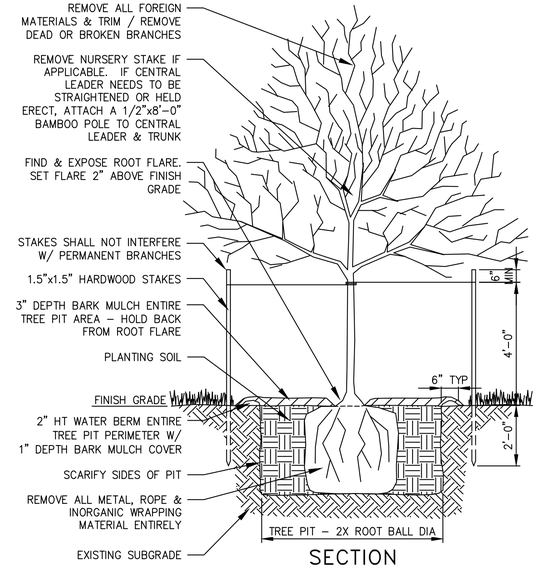

SECTION

TREE INSTALLATION > 10–FT

NOT TO SCALE

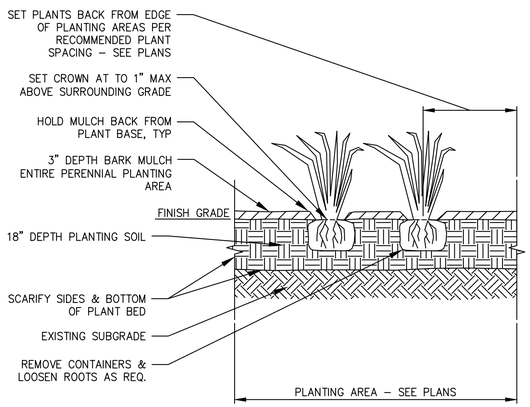

PERENNIAL INSTALLATION

NOT TO SCALE

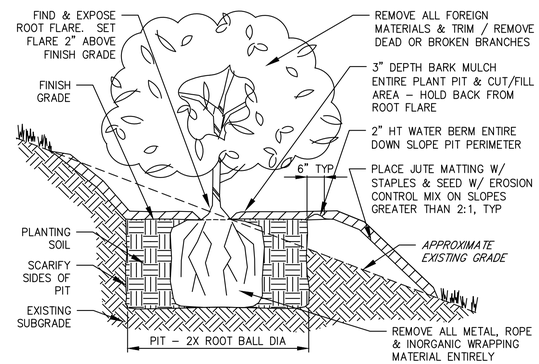

SHRUB INSTALLATION ON SLOPE

NOT TO SCALE

FOR PERMIT

ELEVATION	MLLW	NAVD88*
BFE	+19.0	+14.0
HAT	+11.6	+6.6
MHHW	+9.7	+4.7
MHW	+9.3	+4.3
MSL	+4.8	-0.2
MLW	+0.3	-4.7
MLLW	0.0	-5.0

*PROJECT DATUM

Attention:

0 1"

If this scale bar does not measure 1" then drawing is not original scale.

STATE OF MAINE BRIAN M. MCDEVITT PE18260 LICENSED PROFESSIONAL ENGINEER

6/9/2025

Designed:	DJB
Drawn:	JAM
Checked:	BJB
Approved:	BMM
P.E. No:	13033
GEI Project	2203703

GEI Consultants
GEI CONSULTANTS, INC.
5 MILK STREET
PORTLAND, ME 04101
(207)797-8901

UNIVERSITY OF NEW ENGLAND

11 HILLS BEACH RD.
BIDDEFORD, MAINE

UNIVERSITY OF NEW ENGLAND MARINE SCIENCE CENTER PIER

11 HILLS BEACH ROAD
BIDDEFORD, YORK COUNTY, MAINE

NO	DATE	ISSUE/REVISION	APP
8	6/5/2025	ADDRESS PB COMMENTS	DJB
7	4/16/2025	BIDDEFORD PERMIT APP.	DJB
6	9/17/2024	REVISED PERMIT SET	DJB
5	6/27/2024	REVISED PERMIT SET	DJB
4	9/14/2023	DEP PERMIT SET	DJB
3	6/28/2023	75% DESIGN SUBMISSION	DJB
2	2/15/2023	30% DESIGN SUBMISSION	DJB
1	12/9/2022	15% DESIGN SUB REV	DJB
0	11/11/2022	15% DESIGN SUBMISSION	DJB

SHEET NAME

REVEGETATION NOTES, DETAILS AND SCHEDULES

SHEET NO.

C-016

DICASTELNUOVO, VINNIE \\geiconsultants.com\data\Data_Storage\Working\UNIVERSITY OF NEW ENGLAND\2203703 UNE Marine Science Center Pier\00_CAD\Design\Sheets\2203703-C-016.dwg - 6/6/2025

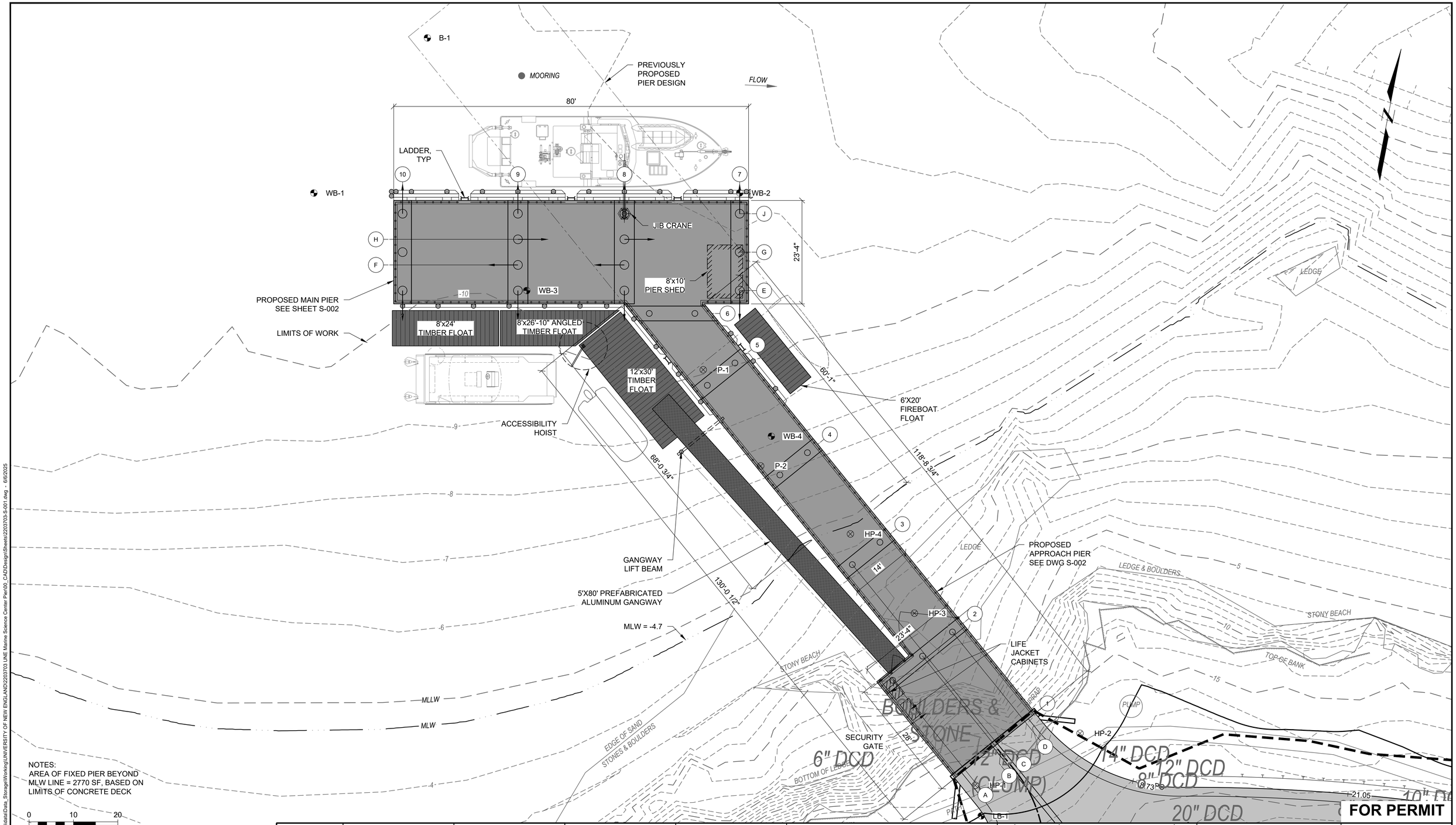

NOTES:
AREA OF FIXED PIER BEYOND MLW LINE = 2770 SF, BASED ON LIMITS OF CONCRETE DECK

0 10 20
SCALE, FEET

ELEVATION	MLLW	NAVD88*
BFE	+19.0	+14.0
HAT	+11.6	+6.6
MHHW	+9.7	+4.7
MHW	+9.3	+4.3
MSL	+4.8	-0.2
MLW	+0.3	-4.7
MLLW	0.0	-5.0

*PROJECT DATUM

Attention:
0 1"
If this scale bar does not measure 1" then drawing is not original scale.

STATE OF MAINE
DANIEL J. BANNON
No. 13033
LICENSED PROFESSIONAL ENGINEER
06/10/2025

Designed:	DJB
Drawn:	JAM
Checked:	BJB
Approved:	BMM
P.E. No:	13033
GEI Project	2203703

GEI Consultants
GEI CONSULTANTS, INC.
5 MILK STREET
PORTLAND, ME 04101
(207)797-8901

UNE
UNIVERSITY OF NEW ENGLAND
11 HILLS BEACH RD.
BIDDEFORD, MAINE

UNIVERSITY OF NEW ENGLAND MARINE SCIENCE CENTER PIER

11 HILLS BEACH ROAD
BIDDEFORD, YORK COUNTY, MAINE

NO	DATE	ISSUE/REVISION	APP
8	6/5/2025	ADDRESS PB COMMENTS	DJB
7	4/16/2025	BIDDEFORD PERMIT APP.	DJB
6	9/17/2024	REVISED PERMIT SET	DJB
5	6/27/2024	REVISED PERMIT SET	DJB
4	9/14/2023	DEP PERMIT SET	DJB
3	6/28/2023	75% DESIGN SUBMISSION	DJB
2	2/15/2023	30% DESIGN SUBMISSION	DJB
1	12/9/2022	15% DESIGN SUB REV	DJB
0	11/11/2022	15% DESIGN SUBMISSION	DJB

SHEET NAME
PIER LAYOUT PLAN

SHEET NO.
S-001

FOR PERMIT

DICASTELNUOVO, VINNIE \\geiconsultants.com\data\Data_Storage\Working\UNIVERSITY OF NEW ENGLAND\2203703 UNE Marine Science Center Pier\00_CAD\Design\Sheets\2203703-S-001.dwg - 6/6/2025

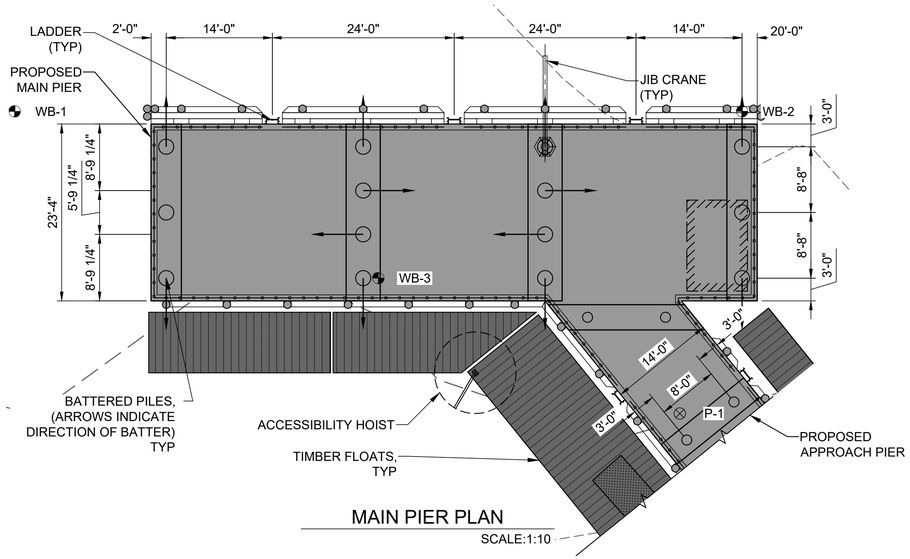

MAIN PIER PLAN

SCALE:1:10

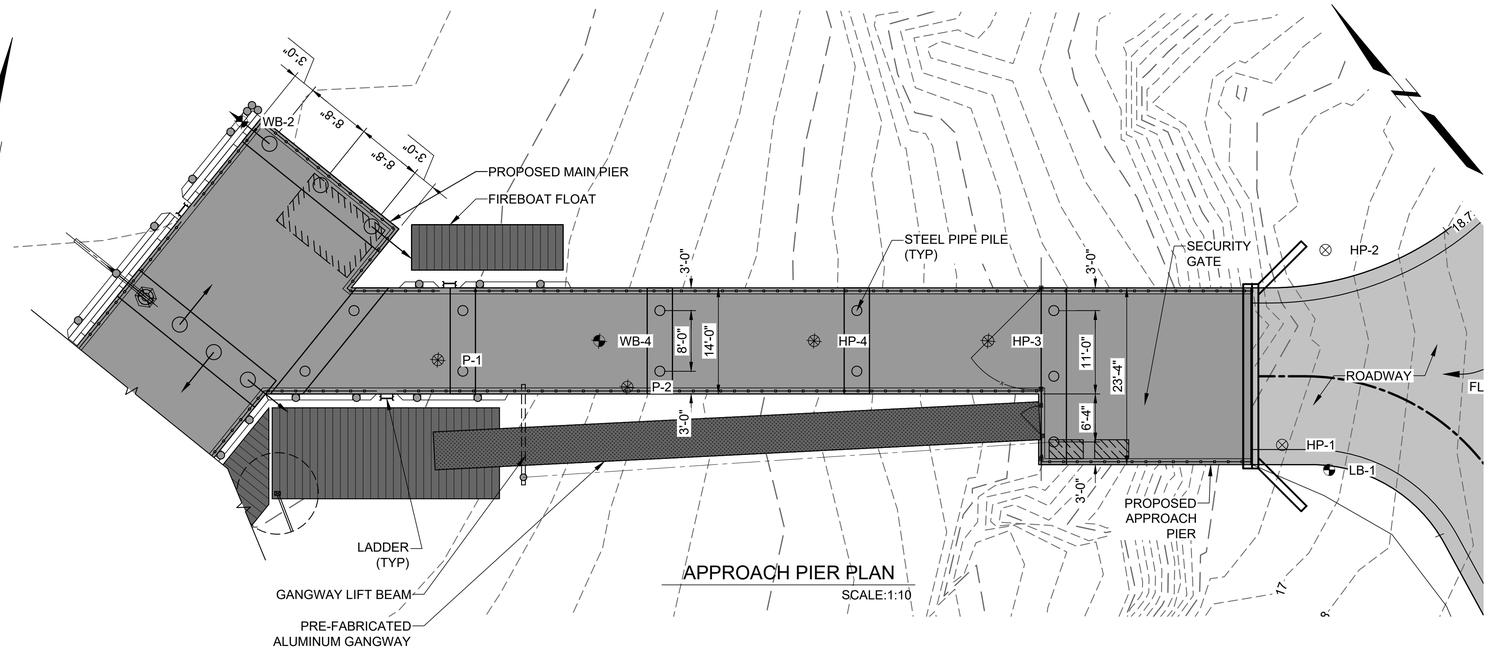

APPROACH PIER PLAN

SCALE:1:10

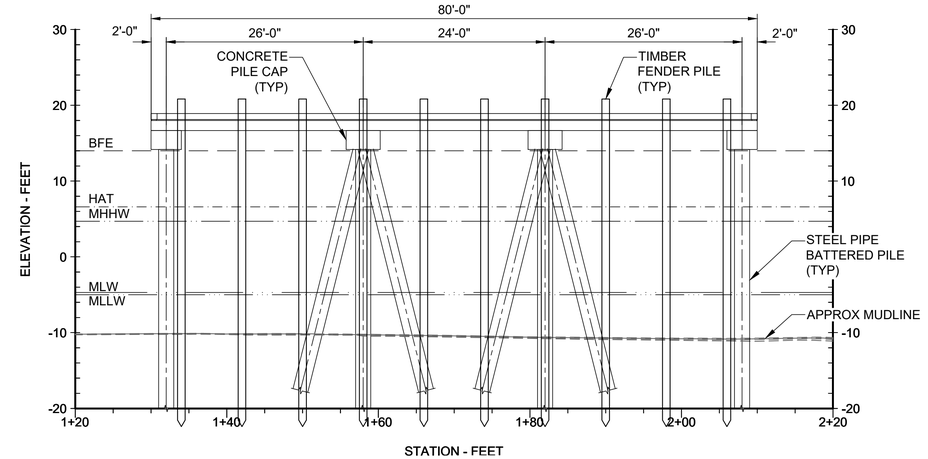

MAIN PIER ELEVATION

SCALE:1:10

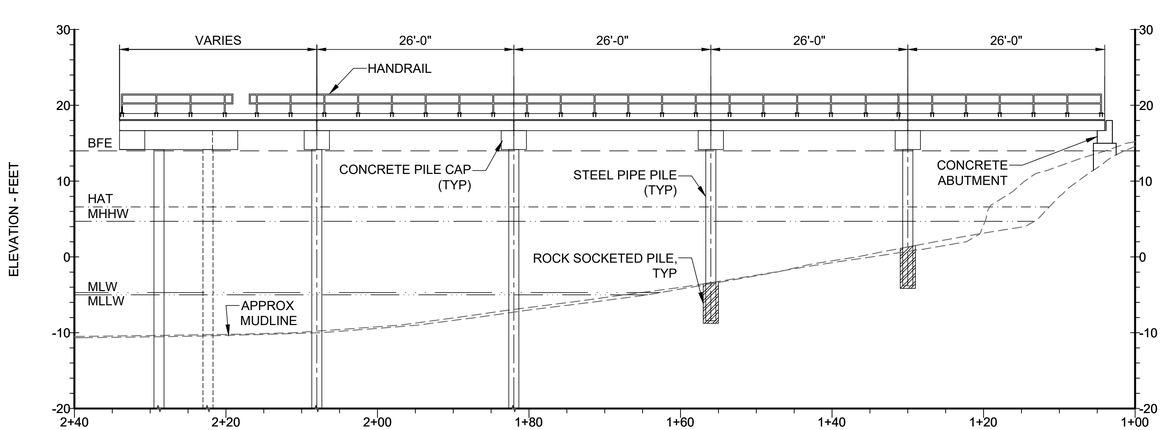

APPROACH PIER ELEVATION

SCALE:1:10

0 10 20

SCALE, FEET

ELEVATION	MLLW	NAVD88*
BFE	+19.0	+14.0
HAT	+11.6	+6.6
MHHW	+9.7	+4.7
MHW	+9.3	+4.3
MSL	+4.8	-0.2
MLW	+0.3	-4.7
MLLW	0.0	-5.0

*PROJECT DATUM

FOR PERMIT

Attention:

0 1"

If this scale bar does not measure 1" then drawing is not original scale.

STATE OF MAINE
DANIEL J. BANNON
No. 13033
LICENSED PROFESSIONAL ENGINEER

06/10/2025

Designed:	DJB
Drawn:	JAM
Checked:	BJB
Approved:	BMM
P.E. No:	13033
GEI Project	2203703

GEI Consultants

GEI CONSULTANTS, INC.
5 MILK STREET
PORTLAND, ME 04101
(207)797-8901

UNIVERSITY OF NEW ENGLAND

11 HILLS BEACH RD.
BIDDEFORD, MAINE

UNIVERSITY OF NEW ENGLAND MARINE SCIENCE CENTER PIER

11 HILLS BEACH ROAD
BIDDEFORD, YORK COUNTY, MAINE

NO	DATE	ISSUE/REVISION	APP
8	6/5/2025	ADDRESS PB COMMENTS	DJB
7	4/16/2025	BIDDEFORD PERMIT APP.	DJB
6	9/17/2024	REVISED PERMIT SET	DJB
5	6/27/2024	REVISED PERMIT SET	DJB
4	9/14/2023	DEP PERMIT SET	DJB
3	6/28/2023	75% DESIGN SUBMISSION	DJB
2	2/15/2023	30% DESIGN SUBMISSION	DJB
1	12/9/2022	15% DESIGN SUB REV	DJB
0	11/11/2022	15% DESIGN SUBMISSION	DJB

SHEET NAME

PIER PLANS AND ELEVATIONS

SHEET NO.

S-002

DICASTELNUOVO, VINNIE \\gisconsultants.com\data\Data_Storage\Working\UNIVERSITY OF NEW ENGLAND\2203703 UNE Marine Science Center Pier\00_CAD\Design\Sheets\2203703-S-002.dwg - 6/6/2025

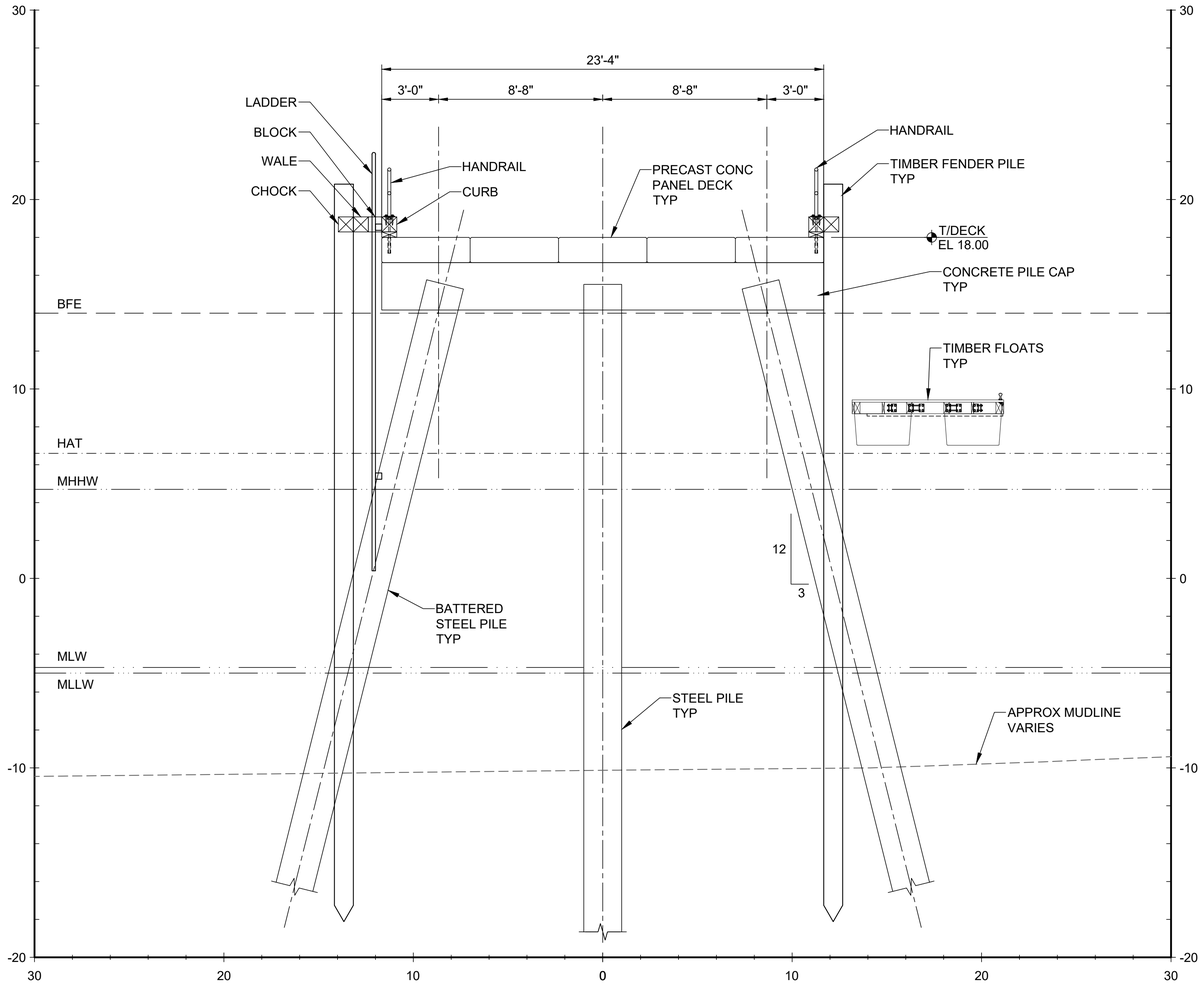

SECTION
MAIN PIER AT BENT 10 SCALE: 1"=4'

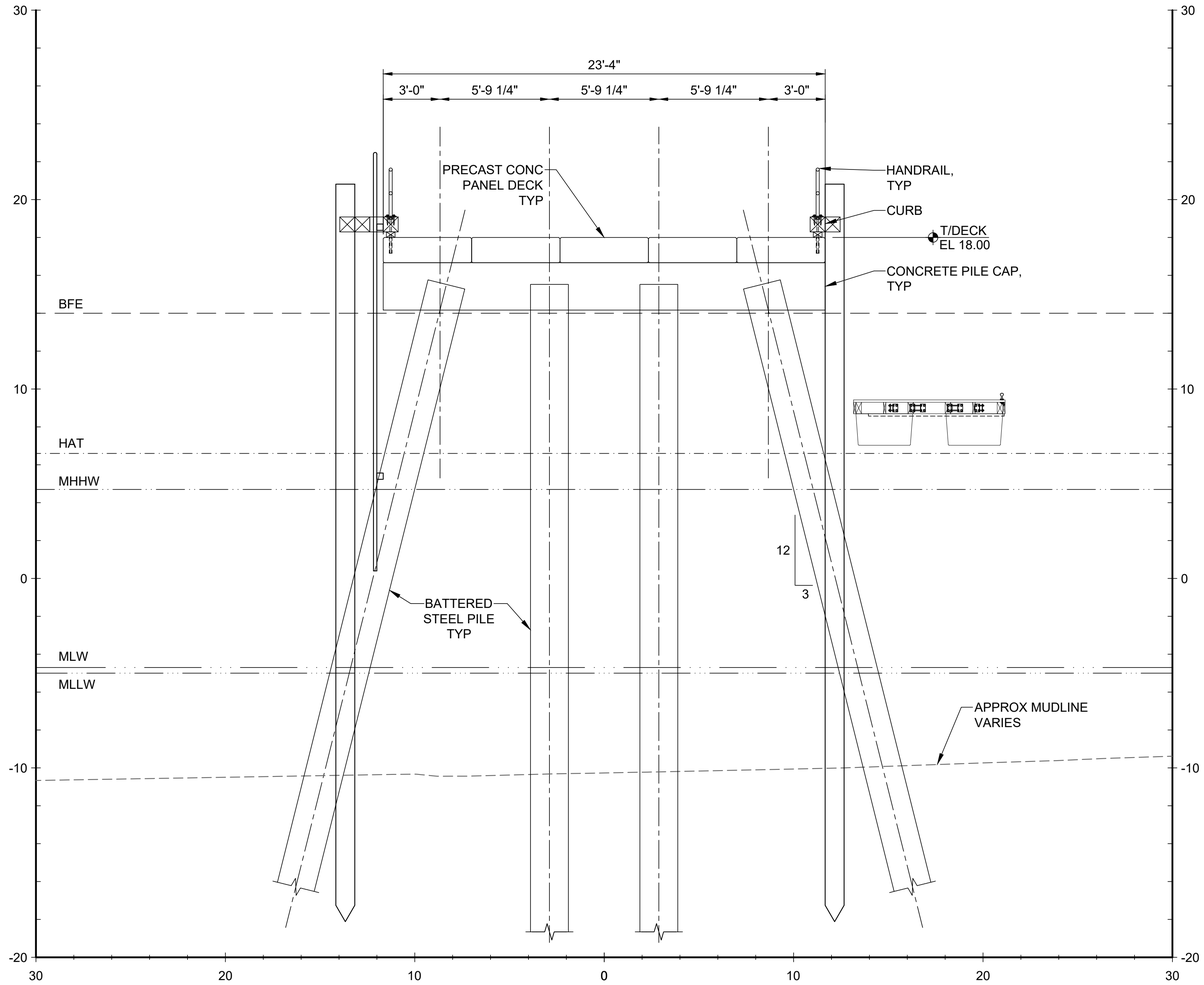

SECTION
MAIN PIER AT BENT 9 SCALE: 1"=4'

0 2 4 8
SCALE, FEET

ELEVATION	MLLW	NAVD88*
BFE	+19.0	+14.0
HAT	+11.6	+6.6
MHHW	+9.7	+4.7
MHW	+9.3	+4.3
MSL	+4.8	-0.2
MLW	+0.3	-4.7
MLLW	0.0	-5.0

*PROJECT DATUM

FOR PERMIT

Attention:
0 1"
If this scale bar does not measure 1" then drawing is not original scale.

STATE OF MAINE
DANIEL J. BANNON
No. 13033
LICENSED PROFESSIONAL ENGINEER
06/10/2025

Designed:	DJB
Drawn:	JAM
Checked:	BJB
Approved:	BMM
P.E. No:	13033
GEI Project	2203703

GEI Consultants
GEI CONSULTANTS, INC.
5 MILK STREET
PORTLAND, ME 04101
(207)797-8901

UNE
UNIVERSITY OF NEW ENGLAND
11 HILLS BEACH RD.
BIDDEFORD, MAINE

UNIVERSITY OF NEW ENGLAND MARINE SCIENCE CENTER PIER

11 HILLS BEACH ROAD
BIDDEFORD, YORK COUNTY, MAINE

NO	DATE	ISSUE/REVISION	APP
8	6/5/2025	ADDRESS PB COMMENTS	DJB
7	4/16/2025	BIDDEFORD PERMIT APP.	DJB
6	9/17/2024	REVISED PERMIT SET	DJB
5	6/27/2024	REVISED PERMIT SET	DJB
4	9/14/2023	DEP PERMIT SET	DJB
3	6/28/2023	75% DESIGN SUBMISSION	DJB
2	2/15/2023	30% DESIGN SUBMISSION	DJB
1	12/9/2022	15% DESIGN SUB REV	DJB
0	11/11/2022	15% DESIGN SUBMISSION	DJB

SHEET NAME
TYPICAL PIER SECTIONS (1 OF 2)

SHEET NO.
S-003

DJCASTELNUOVO, VINNIE \\geiconsultants.com\data\Data_Storage\Working\UNIVERSITY OF NEW ENGLAND\2203703 UNE Marine Science Center Pier\00_CAD\Design\Sheets\2203703-S-003.dwg - 6/6/2025

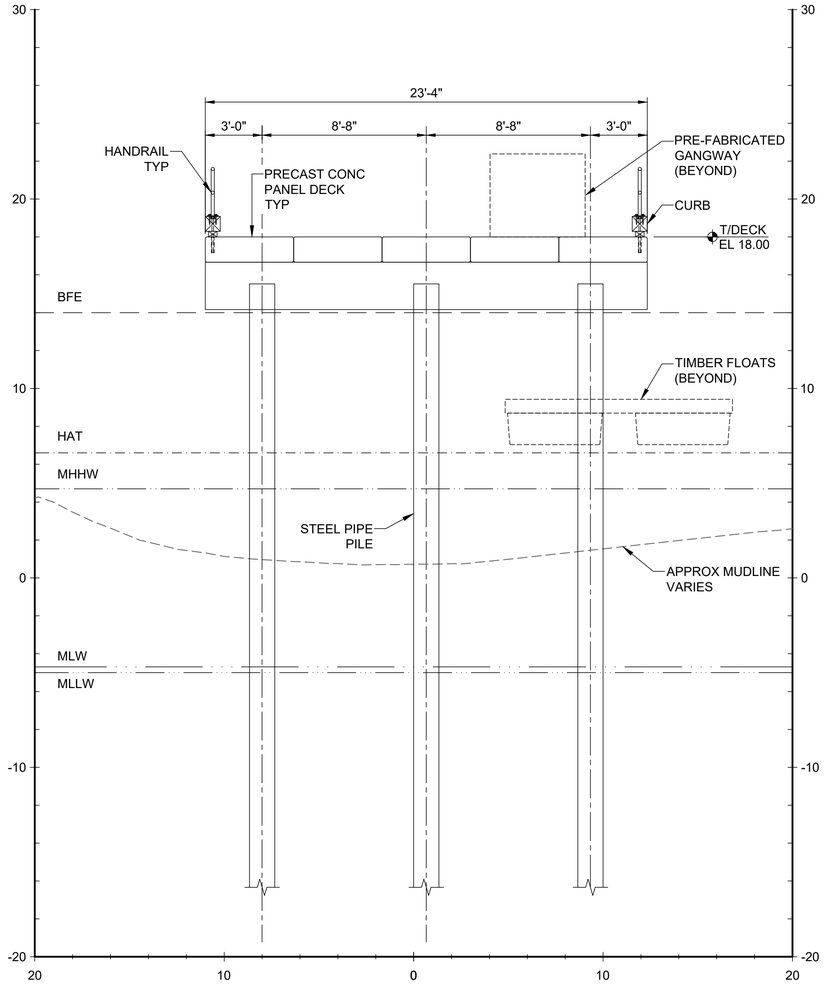

SECTION
28' WIDE APPROACH PIER AT BENT 2 SCALE: 1"=4'

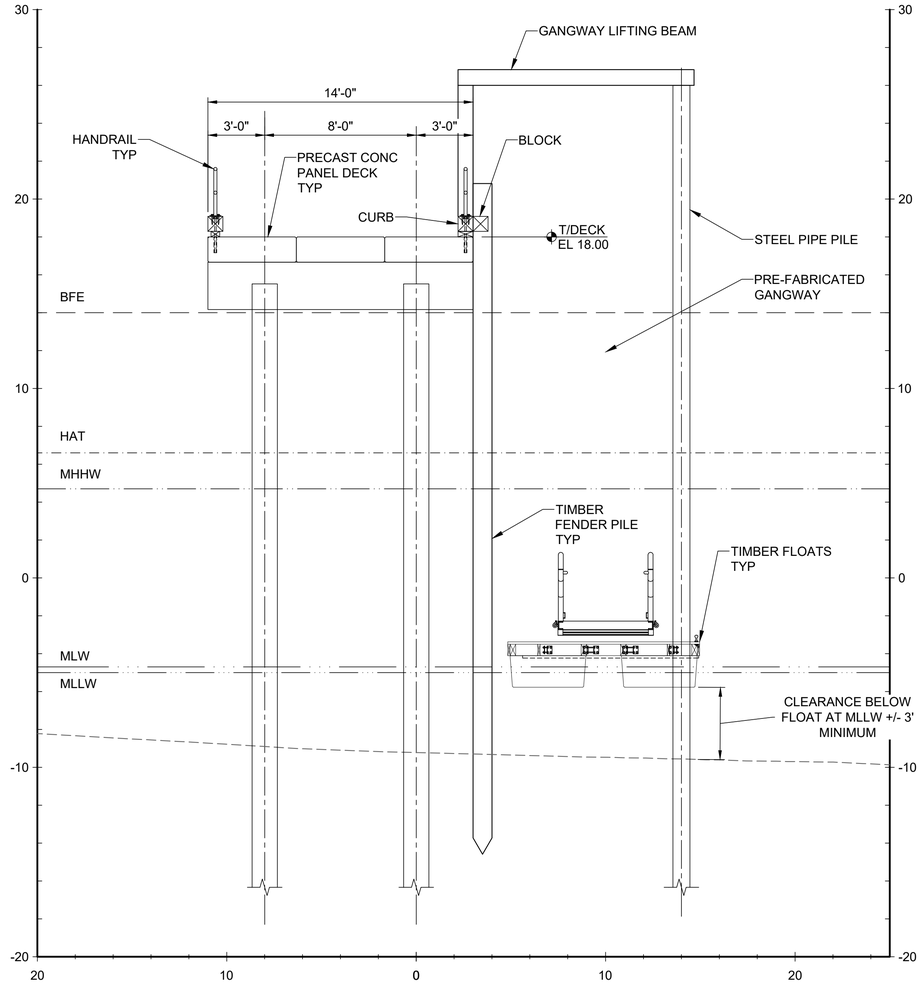

SECTION
14' WIDE APPROACH PIER AT GANGWAY HOIST SCALE: 1"=4'

0 2 4 8
SCALE, FEET

ELEVATION	MLLW	NAVD88*
BFE	+19.0	+14.0
HAT	+11.6	+6.6
MHHW	+9.7	+4.7
MHW	+9.3	+4.3
MSL	+4.8	-0.2
MLW	+0.3	-4.7
MLLW	0.0	-5.0

*PROJECT DATUM

FOR PERMIT

Attention:
0 1"
If this scale bar does not measure 1" then drawing is not original scale.

STATE OF MAINE
DANIEL J. BANNON
No. 13033
LICENSED PROFESSIONAL ENGINEER
06/10/2025

Designed:	DJB
Drawn:	JAM
Checked:	BJB
Approved:	BMM
P.E. No:	13033
GEI Project	2203703

GEI Consultants
GEI CONSULTANTS, INC.
5 MILK STREET
PORTLAND, ME 04101
(207)797-8901

UNIVERSITY OF NEW ENGLAND
11 HILLS BEACH RD.
BIDDEFORD, MAINE

UNIVERSITY OF NEW ENGLAND MARINE SCIENCE CENTER PIER
11 HILLS BEACH ROAD
BIDDEFORD, YORK COUNTY, MAINE

NO	DATE	ISSUE/REVISION	APP
8	6/5/2025	ADDRESS PB COMMENTS	DJB
7	4/16/2025	BIDDEFORD PERMIT APP.	DJB
6	9/17/2024	REVISED PERMIT SET	DJB
5	6/27/2024	REVISED PERMIT SET	DJB
4	9/14/2023	DEP PERMIT SET	DJB
3	6/28/2023	75% DESIGN SUBMISSION	DJB
2	2/15/2023	30% DESIGN SUBMISSION	DJB
1	12/9/2022	15% DESIGN SUB REV	DJB
0	11/11/2022	15% DESIGN SUBMISSION	DJB

SHEET NAME
TYPICAL PIER SECTIONS (2 OF 2)

SHEET NO.
S-004

DICASTELNUOVO, VINNIE \\geiconsultants.com\data\Data_Storage\Working\UNIVERSITY OF NEW ENGLAND\2203703 UNE Marine Science Center Pier\00_CAD\Design\Sheets\2203703-S-004.dwg - 6/6/2025

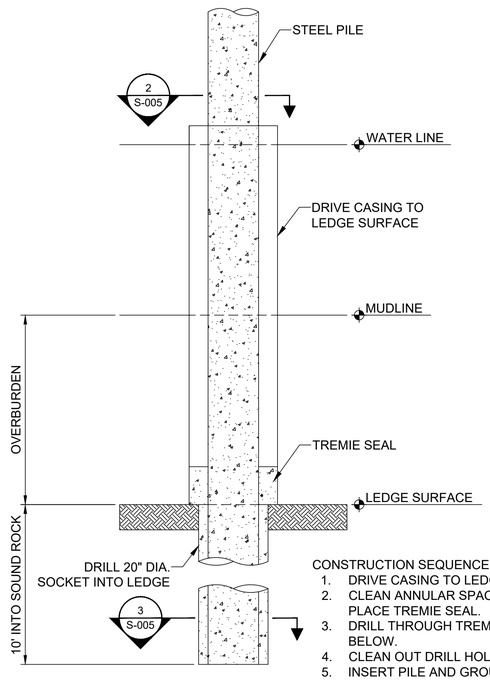

CONSTRUCTION SEQUENCE

1. DRIVE CASING TO LEDGE SURFACE.
2. CLEAN ANNULAR SPACE TO LEDGE SURFACE, PLACE TREMIE SEAL.
3. DRILL THROUGH TREMIE INTO SOUND ROCK BELOW.
4. CLEAN OUT DRILL HOLE.
5. INSERT PILE AND GROUT TO SURFACE.
6. REMOVE CASING.
7. FILL STEEL PIPE PILE TO TOP WITH CONCRETE.

1 DETAIL
PILE SOCKET SCALE: 1" = 2'

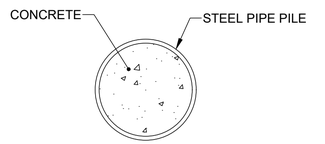

2 SECTION
CONCRETE FILLED STEEL PIPE PILE SCALE: 1" = 1'

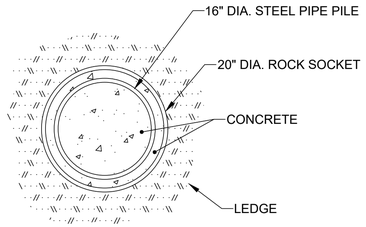

3 SECTION
ROCK SOCKET SCALE: 1" = 1'

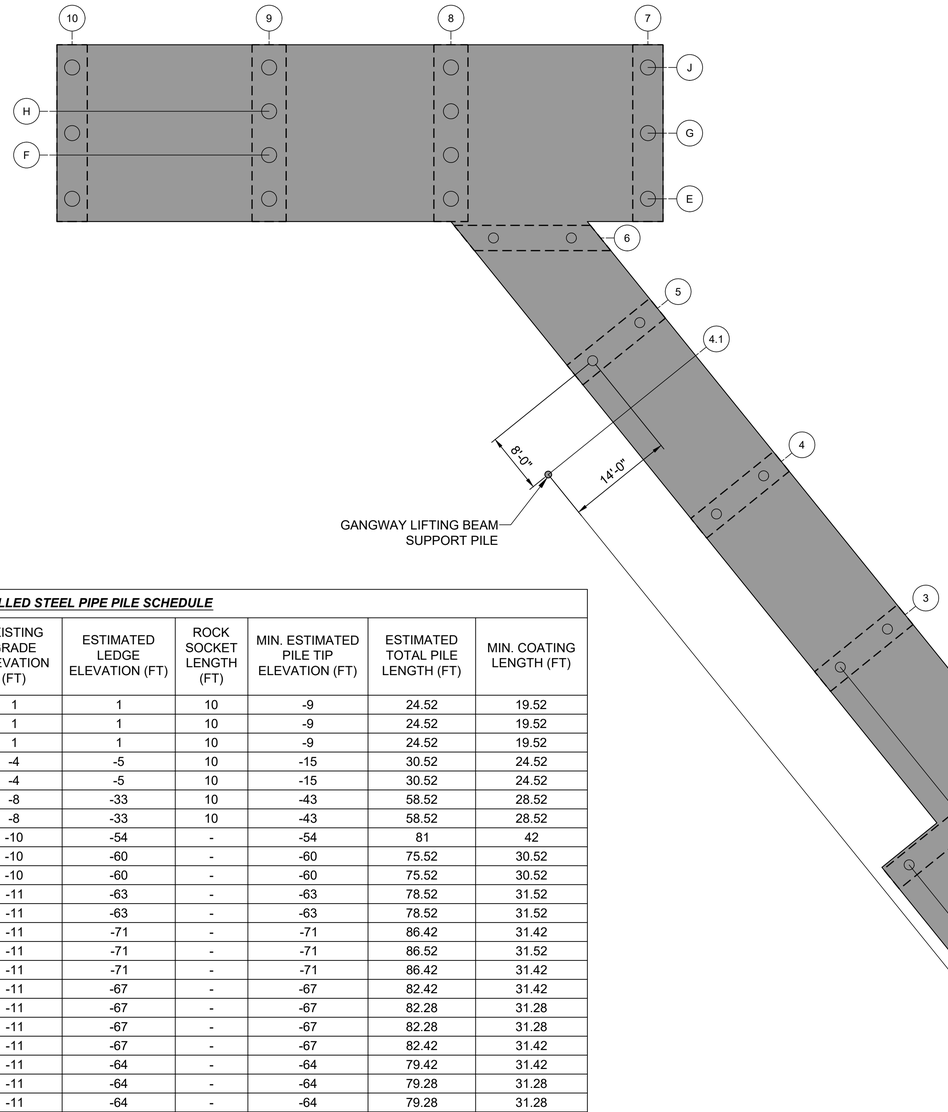

DETAIL
MAIN PIER SCALE: 1" = 10"

CONCRETE FILLED STEEL PIPE PILE SCHEDULE

PILE DESIGNATION	PILE SIZE (INCHES)	BATTER	CUTOFF ELEVATION (FT)	EXISTING GRADE ELEVATION (FT)	ESTIMATED LEDGE ELEVATION (FT)	ROCK SOCKET LENGTH (FT)	MIN. ESTIMATED PILE TIP ELEVATION (FT)	ESTIMATED TOTAL PILE LENGTH (FT)	MIN. COATING LENGTH (FT)
2A	16x5/8	VERTICAL	15.52	1	1	10	-9	24.52	19.52
2B	16x5/8	VERTICAL	15.52	1	1	10	-9	24.52	19.52
2D	16x5/8	VERTICAL	15.52	1	1	10	-9	24.52	19.52
3C	16x5/8	VERTICAL	15.52	-4	-5	10	-15	30.52	24.52
3D	16x5/8	VERTICAL	15.52	-4	-5	10	-15	30.52	24.52
4C	16x5/8	VERTICAL	15.52	-8	-33	10	-43	58.52	28.52
4D	16x5/8	VERTICAL	15.52	-8	-33	10	-43	58.52	28.52
4.1-A.1	10.75x5/8	VERTICAL	27	-10	-54	-	-54	81	42
5C	16x5/8	VERTICAL	15.52	-10	-60	-	-60	75.52	30.52
5D	16x5/8	VERTICAL	15.52	-10	-60	-	-60	75.52	30.52
6C	16x5/8	VERTICAL	15.52	-11	-63	-	-63	78.52	31.52
6D	16x5/8	VERTICAL	15.52	-11	-63	-	-63	78.52	31.52
7E	24x5/8	3:12	15.42	-11	-71	-	-71	86.42	31.42
7G	24x5/8	VERTICAL	15.52	-11	-71	-	-71	86.52	31.52
7J	24x5/8	3:12	15.42	-11	-71	-	-71	86.42	31.42
8E	24x5/8	3:12	15.42	-11	-67	-	-67	82.42	31.42
8F	24x5/8	3:12	15.28	-11	-67	-	-67	82.28	31.28
8H	24x5/8	3:12	15.28	-11	-67	-	-67	82.28	31.28
8J	24x5/8	3:12	15.42	-11	-67	-	-67	82.42	31.42
9E	24x5/8	3:12	15.42	-11	-64	-	-64	79.42	31.42
9F	24x5/8	3:12	15.28	-11	-64	-	-64	79.28	31.28
9H	24x5/8	3:12	15.28	-11	-64	-	-64	79.28	31.28
9J	24x5/8	3:12	15.42	-11	-64	-	-64	79.42	31.42
10E	24x5/8	3:12	15.42	-11	-66	-	-66	81.42	31.42
10G	24x5/8	VERTICAL	15.52	-11	-66	-	-66	81.52	31.52
10J	24x5/8	3:12	15.42	-11	-66	-	-66	81.42	31.42
							TOTAL	1821.5	

SCHEDULE NOTES

1. ALL ELEVATIONS REFERENCED IN TABLE ARE IN NAVD88 DATUM.

0 10 20
SCALE, FEET

0 1 2 4
SCALE, FEET

ELEVATION	MLLW	NAVD88*
BFE	+19.0	+14.0
HAT	+11.6	+6.6
MHHW	+9.7	+4.7
MHW	+9.3	+4.3
MSL	+4.8	-0.2
MLW	+0.3	-4.7
MLLW	0.0	-5.0

*PROJECT DATUM

FOR PERMIT

Attention:
0 1"
If this scale bar does not measure 1" then drawing is not original scale.

STATE OF MAINE
DANIEL J. BANNON
No. 13033
LICENSED PROFESSIONAL ENGINEER
06/10/2025

Designed:	DJB
Drawn:	JAM
Checked:	BJB
Approved:	BMM
P.E. No:	13033
GEI Project	2203703

GEI Consultants
GEI CONSULTANTS, INC.
5 MILK STREET
PORTLAND, ME 04101
(207)797-8901

UNE
UNIVERSITY OF NEW ENGLAND
11 HILLS BEACH RD.
BIDDEFORD, MAINE

UNIVERSITY OF NEW ENGLAND MARINE SCIENCE CENTER PIER
11 HILLS BEACH ROAD
BIDDEFORD, YORK COUNTY, MAINE

NO	DATE	ISSUE/REVISION	APP
8	6/5/2025	ADDRESS PB COMMENTS	DJB
7	4/16/2025	BIDDEFORD PERMIT APP.	DJB
6	9/17/2024	REVISED PERMIT SET	DJB
5	6/27/2024	REVISED PERMIT SET	DJB
4	9/14/2023	DEP PERMIT SET	DJB
3	6/28/2023	75% DESIGN SUBMISSION	DJB
2	2/15/2023	30% DESIGN SUBMISSION	DJB
1	12/9/2022	15% DESIGN SUB REV	DJB
0	11/11/2022	15% DESIGN SUBMISSION	DJB

SHEET NAME
PILE PLAN

SHEET NO.
S-005

DICASTELNUOVO, VINNIE \\geiconsultants.com\data\Data_Storage\Working\UNIVERSITY OF NEW ENGLAND\2203703 UNE Marine Science Center Pier\00_CAD\Design\Sheets\2203703-S-005.dwg - 6/6/2025

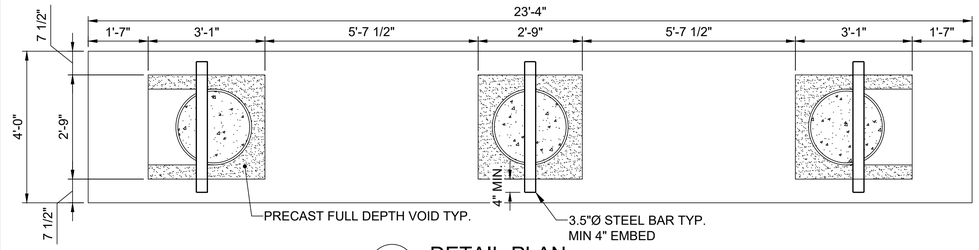

1 DETAIL-PLAN
MAIN PIER
BENT 7 & 10
SCALE: 1" = 2'

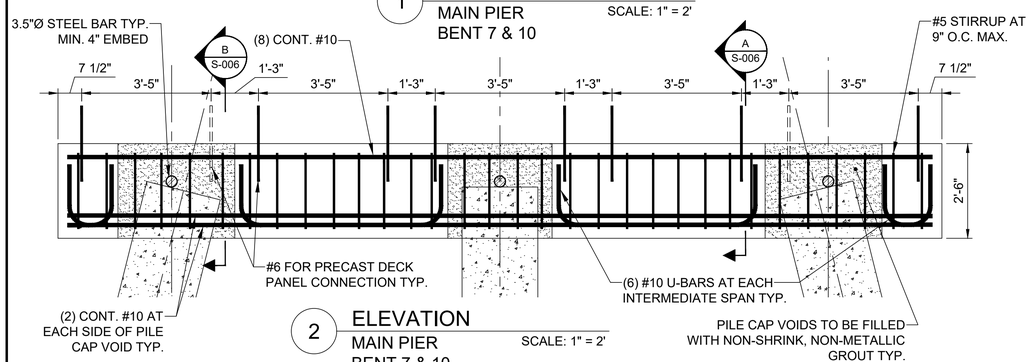

2 ELEVATION
MAIN PIER
BENT 7 & 10
SCALE: 1" = 2'

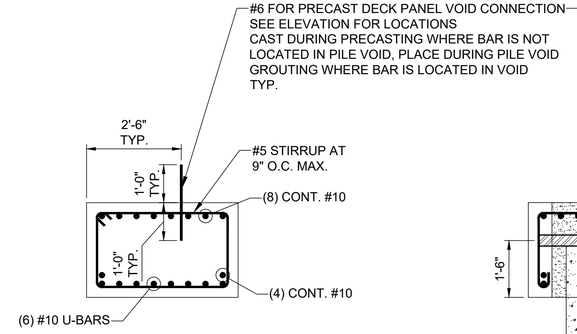

A SECTION
MAIN PIER
BENT 7 & 10
SCALE: 1" = 2'

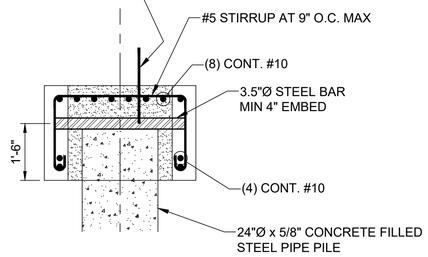

B SECTION
MAIN PIER
BENT 7 & 10
SCALE: 1" = 2'

5 DETAIL
MAIN PIER
N.T.S.

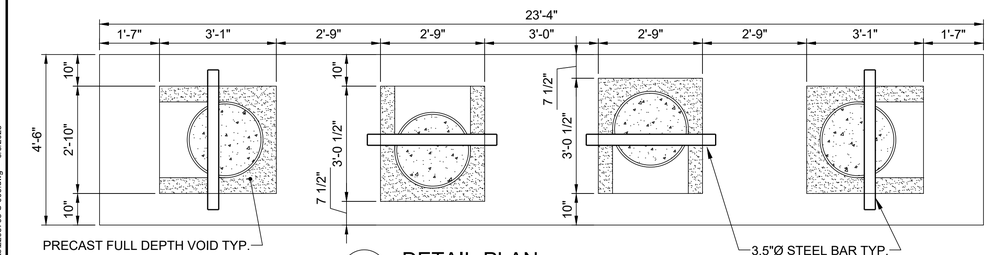

3 DETAIL-PLAN
MAIN PIER
BENT 8 & 9
SCALE: 1" = 2'

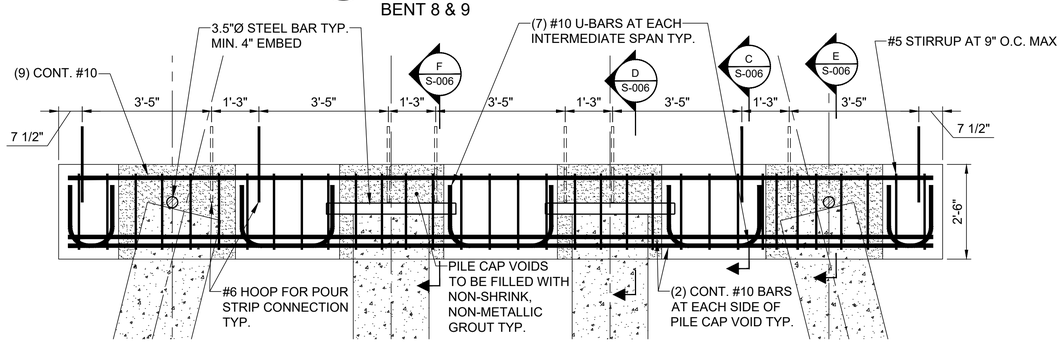

4 ELEVATION
MAIN PIER
BENT 8 & 9
SCALE: 1" = 2'

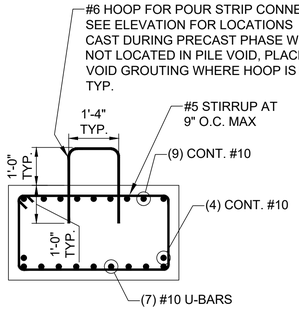

C SECTION
MAIN PIER
BENT 8 & 9
SCALE: 1" = 2'

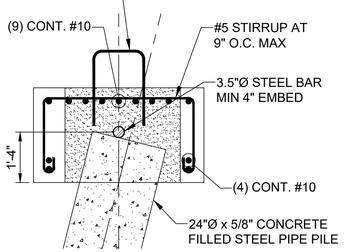

D SECTION
MAIN PIER
BENT 8 & 9
SCALE: 1" = 2'

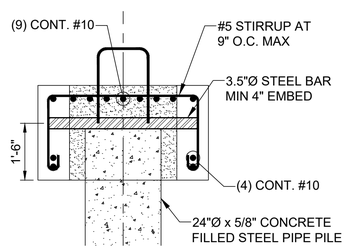

E SECTION
MAIN PIER
BENT 8 & 9
SCALE: 1" = 2'

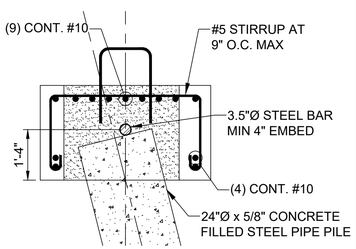

F SECTION
MAIN PIER
BENT 8 & 9
SCALE: 1" = 2'

FOR PERMIT

0 1 2 4
SCALE, FEET

ELEVATION	MLLW	NAVD88*
BFE	+19.0	+14.0
HAT	+11.6	+6.6
MHHW	+9.7	+4.7
MHW	+9.3	+4.3
MSL	+4.8	-0.2
MLW	+0.3	-4.7
MLLW	0.0	-5.0

*PROJECT DATUM

Attention:
0 1"
If this scale bar does not measure 1" then drawing is not original scale.

STATE OF MAINE
DANIEL J. BANNON
No. 13033
LICENSED PROFESSIONAL ENGINEER
06/10/2025

Designed:	DJB
Drawn:	JAM
Checked:	BJB
Approved:	BMM
P.E. No:	13033
GEI Project	2203703

GEI Consultants
GEI CONSULTANTS, INC.
5 MILK STREET
PORTLAND, ME 04101
(207)797-8901

UNE
UNIVERSITY OF NEW ENGLAND
11 HILLS BEACH RD.
BIDDEFORD, MAINE

UNIVERSITY OF NEW ENGLAND MARINE SCIENCE CENTER PIER

11 HILLS BEACH ROAD
BIDDEFORD, YORK COUNTY, MAINE

NO	DATE	ISSUE/REVISION	APP
8	6/5/2025	ADDRESS PB COMMENTS	DJB
7	4/16/2025	BIDDEFORD PERMIT APP.	DJB
6	9/17/2024	REVISED PERMIT SET	DJB
5	6/27/2024	REVISED PERMIT SET	DJB
4	9/14/2023	DEP PERMIT SET	DJB
3	6/28/2023	75% DESIGN SUBMISSION	DJB
2	2/15/2023	30% DESIGN SUBMISSION	DJB
1	12/9/2022	15% DESIGN SUB REV	DJB
0	11/11/2022	15% DESIGN SUBMISSION	DJB

SHEET NAME
PRECAST PILE CAP PLAN AND SECTIONS 1 OF 2

SHEET NO.
S-006

DICASTELNUOVO, VINNIE \\geiconsultants.com\data\Data_Storage\Working\UNIVERSITY OF NEW ENGLAND\2203703 UNE Marine Science Center Pier\00_CAD\Design\Sheets\2203703-S-006.dwg - 6/6/2025

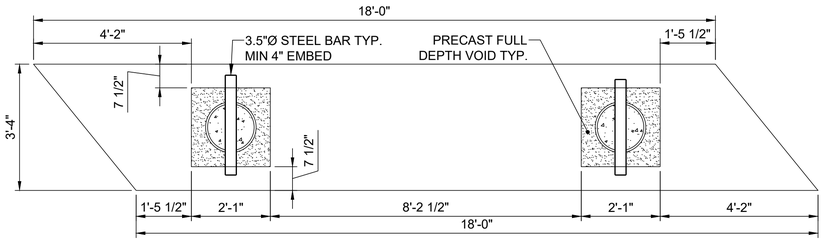

1 DETAIL-PLAN
APPROACH PIER BENT 6 — SCALE: 1" = 2'

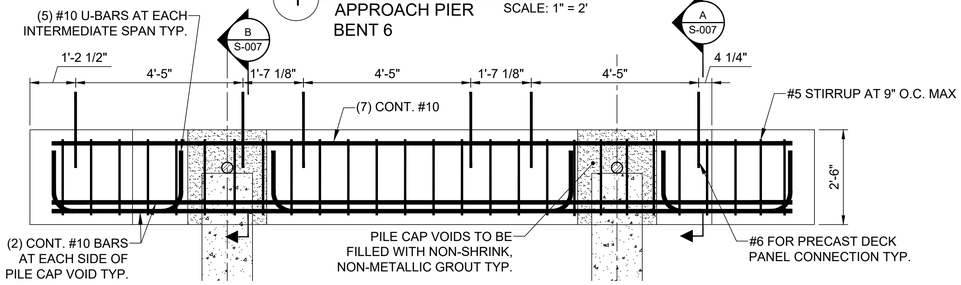

2 ELEVATION
APPROACH PIER BENT 6 — SCALE: 1" = 2'

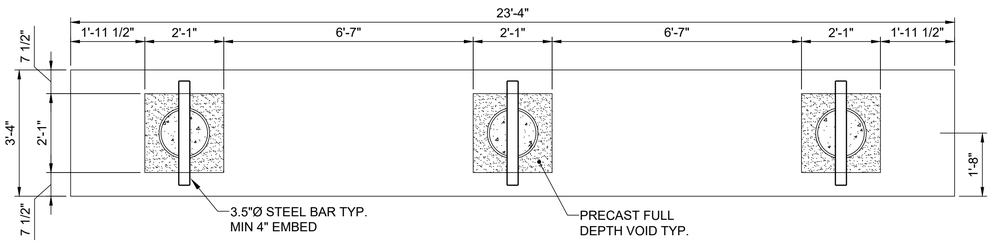

3 DETAIL-PLAN
APPROACH PIER BENT 2 — SCALE: 1" = 2'

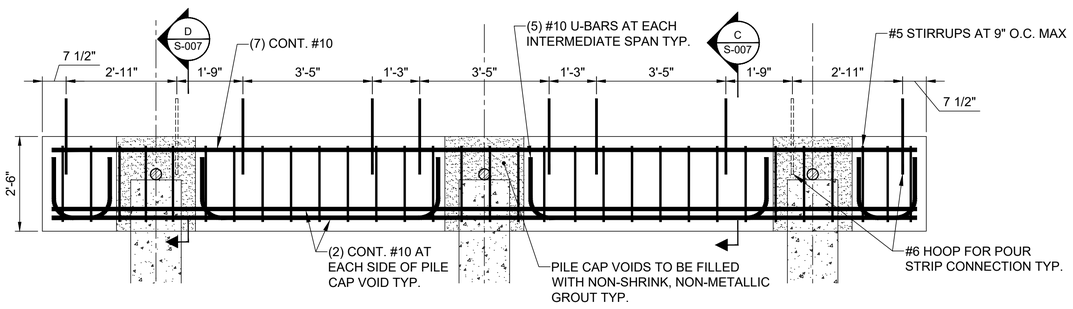

4 ELEVATION
APPROACH PIER BENT 2 — SCALE: 1" = 2'

0 1 2 4
SCALE, FEET

ELEVATION	MLLW	NAVD88*
BFE	+19.0	+14.0
HAT	+11.6	+6.6
MHHW	+9.7	+4.7
MHW	+9.3	+4.3
MSL	+4.8	-0.2
MLW	+0.3	-4.7
MLLW	0.0	-5.0

*PROJECT DATUM

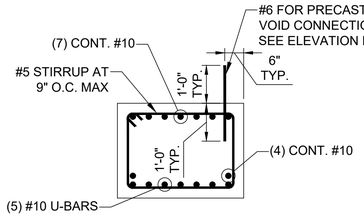

A SECTION
APPROACH PIER BENT 6 — SCALE: 1" = 2'

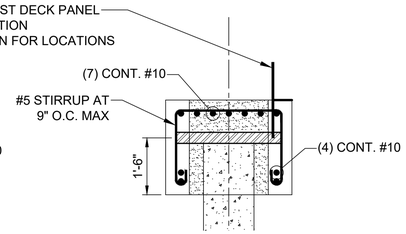

B SECTION
APPROACH PIER BENT 6 — SCALE: 1" = 2'

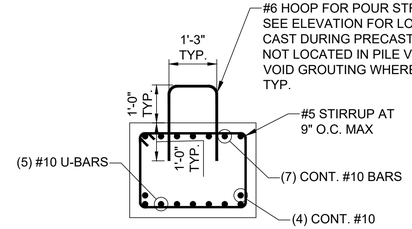

C SECTION
APPROACH PIER BENTS 2-5 — SCALE: 1" = 2'

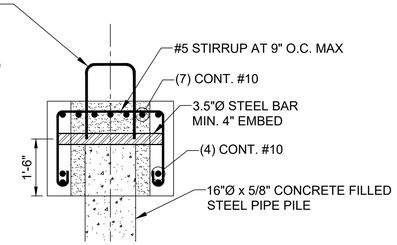

D SECTION
APPROACH PIER BENTS 2-5 — SCALE: 1" = 2'

7 DETAIL
MAIN PIER — N.T.S.

5 DETAIL-PLAN
APPROACH PIER BENTS 3-5 — SCALE: 1" = 2'

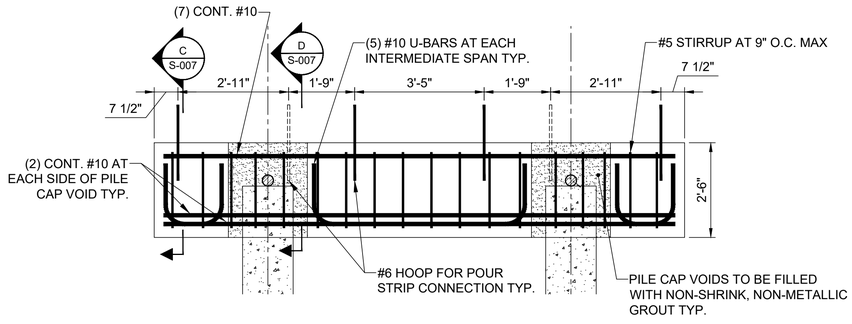

6 ELEVATION
APPROACH PIER BENTS 3-5 — SCALE: 1" = 2'

FOR PERMIT

Attention:
0 1"
If this scale bar does not measure 1" then drawing is not original scale.

STATE OF MAINE
DANIEL J. BANNON
No. 13033
LICENSED PROFESSIONAL ENGINEER
06/10/2025

Designed:	DJB
Drawn:	JAM
Checked:	BJB
Approved:	BMM
P.E. No:	13033
GEI Project	2203703

GEI Consultants
GEI CONSULTANTS, INC.
5 MILK STREET
PORTLAND, ME 04101
(207)797-8901

UNE
UNIVERSITY OF NEW ENGLAND
11 HILLS BEACH RD.
BIDDEFORD, MAINE

UNIVERSITY OF NEW ENGLAND MARINE SCIENCE CENTER PIER
11 HILLS BEACH ROAD
BIDDEFORD, YORK COUNTY, MAINE

NO	DATE	ISSUE/REVISION	APP
8	6/5/2025	ADDRESS PB COMMENTS	DJB
7	4/16/2025	BIDDEFORD PERMIT APP.	DJB
6	9/17/2024	REVISED PERMIT SET	DJB
5	6/27/2024	REVISED PERMIT SET	DJB
4	9/14/2023	DEP PERMIT SET	DJB
3	6/28/2023	75% DESIGN SUBMISSION	DJB
2	2/15/2023	30% DESIGN SUBMISSION	DJB
1	12/9/2022	15% DESIGN SUB REV	DJB
0	11/11/2022	15% DESIGN SUBMISSION	DJB

SHEET NAME
PRECAST PILE CAP PLAN AND SECTIONS 2 OF 2

SHEET NO.
S-007

DIGASTELNUOVO, VINNIE \\bos1v-fs02\Data_Storage\Working\UNIVERSITY OF NEW ENGLAND\2203703 UNE Marine Science Center Pier\00_CAD\Design\Sheets\2203703-S-007.dwg - 6/6/2025

PRECAST DECK PANEL SCHEDULE					
PANEL ID	A	B	C	D	QTY.
A	4'-8"	25'-2"	-	-	5
B	4'-8"	24'-3"	-	-	9
C	4'-8"	-	13'-3"	17'-0"	1
D	4'-8"	-	17'-0"	20'-9 1/2"	1
E	4'-8"	-	20'-9 1/2"	24'-7"	1
F	4'-8"	26'-0"	-	-	10
G	4'-8"	22'-0"	-	-	5

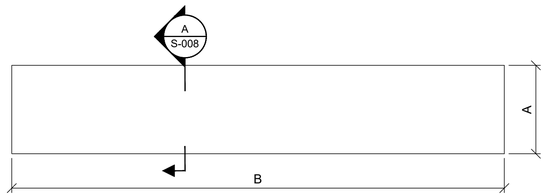

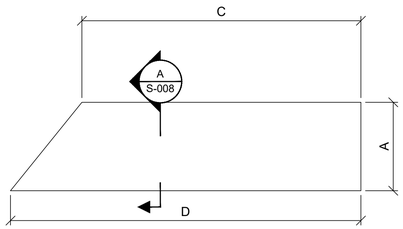

1 DETAIL-PLAN
PRECAST DECK PANEL SCALE: 1"=4'

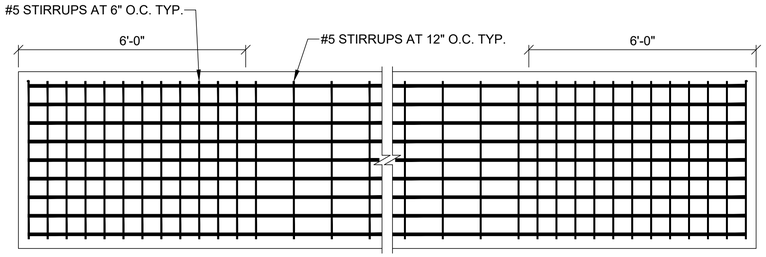

3 DETAIL-PLAN PLANKS A, B, F, & G
PRECAST DECK PANEL
STIRRUP SPACING SCALE: 1"=2'

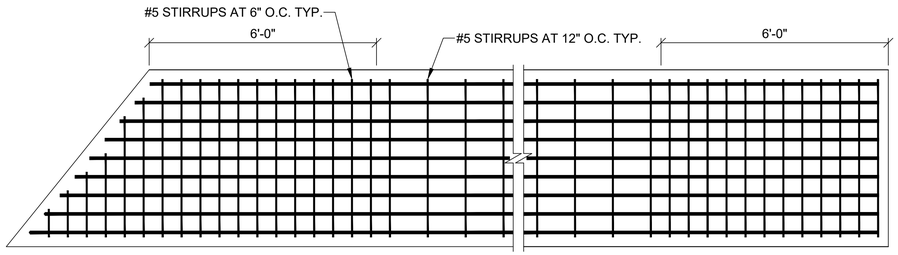

4 DETAIL-PLAN PLANKS C, D, & E
PRECAST DECK PANEL
STIRRUP SPACING SCALE: 1"=2'

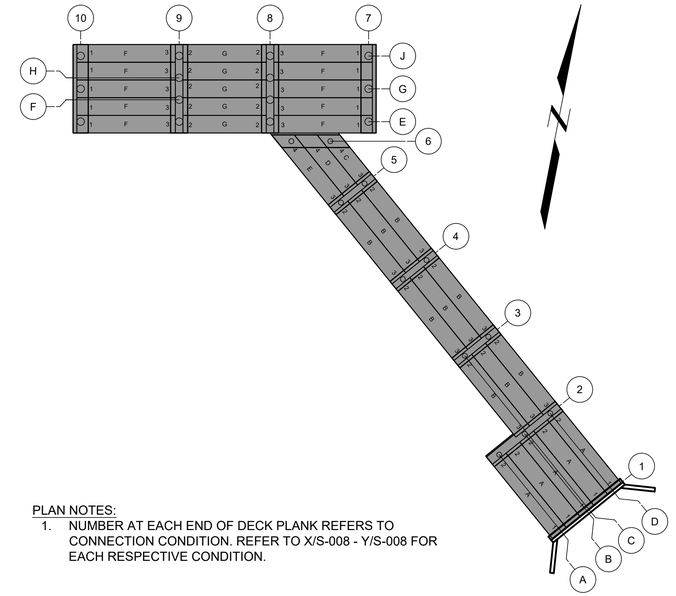

PLAN NOTES:
1. NUMBER AT EACH END OF DECK PLANK REFERS TO CONNECTION CONDITION. REFER TO X/S-008 - Y/S-008 FOR EACH RESPECTIVE CONDITION.

9 DETAIL
PIER DECK PANELS N.T.S.

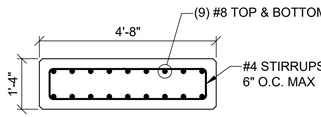

A SECTION
PRECAST DECK PANEL SCALE: 1"=2'

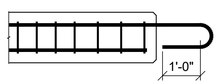

B SECTION
PRECAST DECK PANEL
CONNECTION END 2 & 3 SCALE: 1"=2'

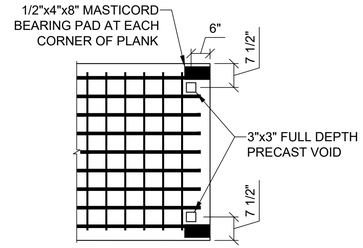

5 DETAIL - PLAN
DECK PANEL
CONNECTION 1 SCALE: 1"=2'

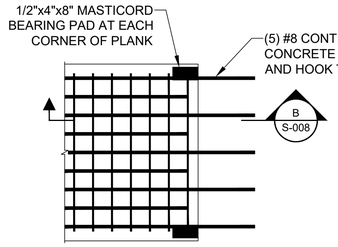

6 DETAIL - PLAN
DECK PANEL
CONNECTION 2 SCALE: 1"=2'

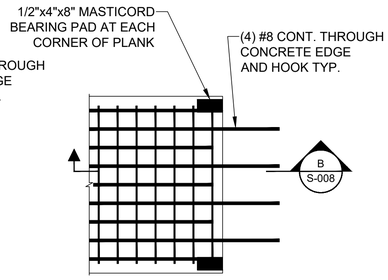

7 DETAIL - PLAN
DECK PANEL
CONNECTION 3 SCALE: 1"=2'

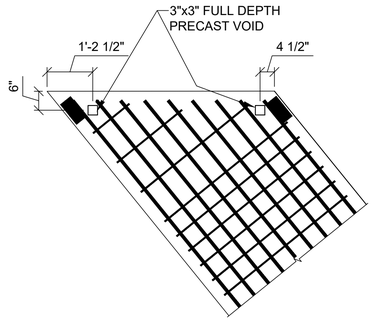

8 DETAIL - PLAN
DECK PANEL
CONNECTION 1 SCALE: 1"=2'

0 10 20
SCALE, FEET

0 1 2 4
SCALE, FEET

ELEVATION	MLLW	NAVD88*
BFE	+19.0	+14.0
HAT	+11.6	+6.6
MHHW	+9.7	+4.7
MHW	+9.3	+4.3
MSL	+4.8	-0.2
MLW	+0.3	-4.7
MLLW	0.0	-5.0

*PROJECT DATUM

FOR PERMIT

Attention:
0 1"
If this scale bar does not measure 1" then drawing is not original scale.

STATE OF MAINE
DANIEL J. BANNON
No. 13033
LICENSED PROFESSIONAL ENGINEER
06/10/2025

Designed:	DJB
Drawn:	JAM
Checked:	BJB
Approved:	BMM
P.E. No:	13033
GEI Project	2203703

GEI Consultants
GEI CONSULTANTS, INC.
5 MILK STREET
PORTLAND, ME 04101
(207)797-8901

UNIVERSITY OF NEW ENGLAND
11 HILLS BEACH RD.
BIDDEFORD, MAINE

UNIVERSITY OF NEW ENGLAND MARINE SCIENCE CENTER PIER
11 HILLS BEACH ROAD
BIDDEFORD, YORK COUNTY, MAINE

NO	DATE	ISSUE/REVISION	APP
8	6/5/2025	ADDRESS PB COMMENTS	DJB
7	4/16/2025	BIDDEFORD PERMIT APP.	DJB
6	9/17/2024	REVISED PERMIT SET	DJB
5	6/27/2024	REVISED PERMIT SET	DJB
4	9/14/2023	DEP PERMIT SET	DJB
3	6/28/2023	75% DESIGN SUBMISSION	DJB
2	2/15/2023	30% DESIGN SUBMISSION	DJB
1	12/9/2022	15% DESIGN SUB REV	DJB
0	11/11/2022	15% DESIGN SUBMISSION	DJB

SHEET NAME
PRECAST DECK PANEL PLAN

SHEET NO.
S-008

D:\CASTELNUOVO, VINNIE \\cos1v-fs02\Data_Storage\Working\UNIVERSITY OF NEW ENGLAND\2203703 UNE Marine Science Center Pier\00_CAD\Design\Sheets\2203703-S-008.dwg - 6/6/2025

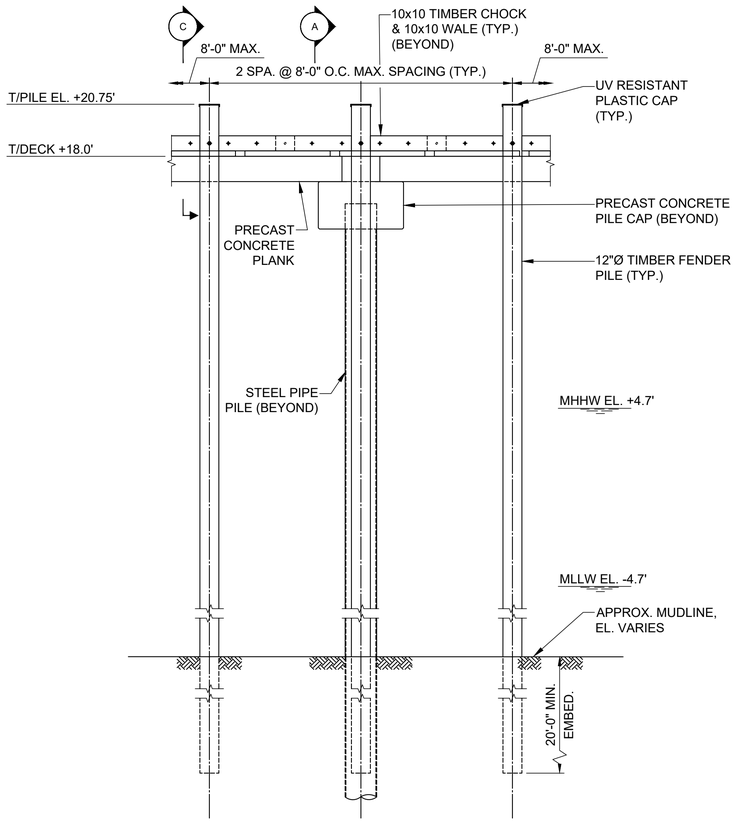

TIMBER FENDER DETAIL

SCALE: 1/4" = 1'-0"

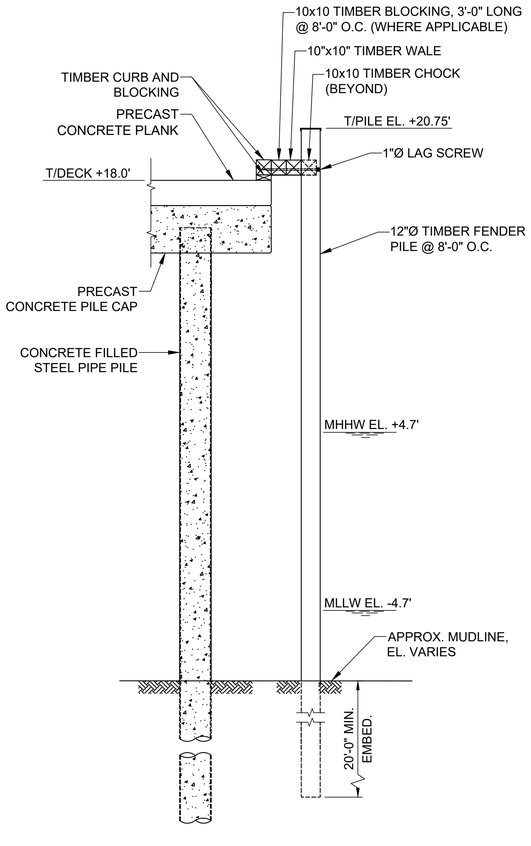

A TIMBER FENDER SECTION

SCALE: 1/4" = 1'-0"

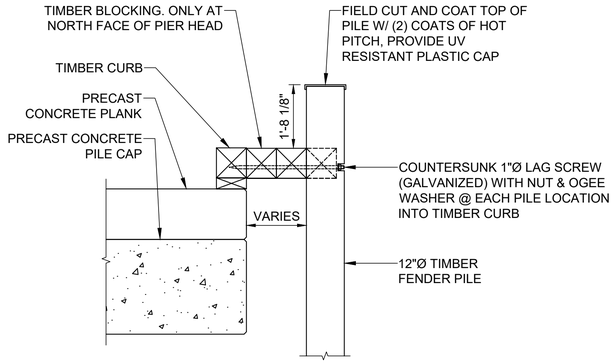

C FENDER PILE CONNECTION

SCALE: 1/2" = 1'-0"

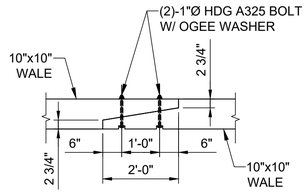

D WALE SPLICE DETAIL

SCALE: 1/2" = 1'-0"

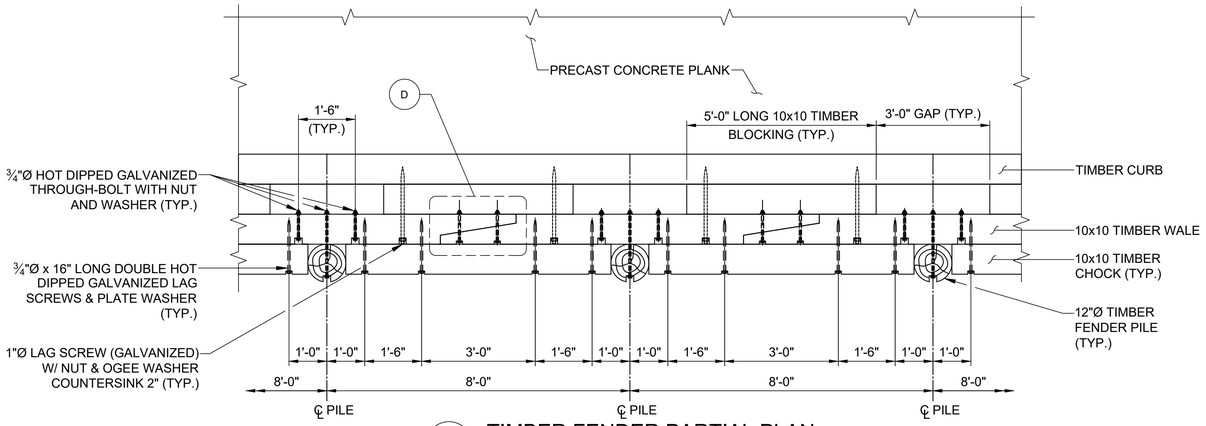

B TIMBER FENDER PARTIAL PLAN

SCALE: 1/2" = 1'-0"

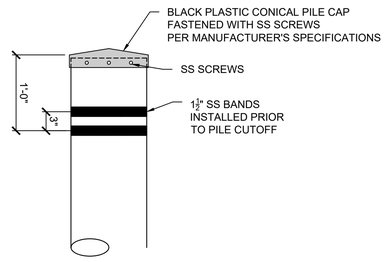

E PILE BANDING DETAIL

SCALE: 1" = 1'-0"

FOR PERMIT

ELEVATION	MLLW	NAVD88*
BFE	+19.0	+14.0
HAT	+11.6	+6.6
MHHW	+9.7	+4.7
MHW	+9.3	+4.3
MSL	+4.8	-0.2
MLW	+0.3	-4.7
MLLW	0.0	-5.0

*PROJECT DATUM

Attention:

0 1"

If this scale bar does not measure 1" then drawing is not original scale.

STATE OF MAINE DANIEL J. BANNON No. 13033 LICENSED PROFESSIONAL ENGINEER

06/10/2025

Designed:	DJB
Drawn:	JAM
Checked:	BJB
Approved:	BMM
P.E. No:	13033
GEI Project	2203703

GEI Consultants
GEI CONSULTANTS, INC.
5 MILK STREET
PORTLAND, ME 04101
(207)797-8901

UNE
UNIVERSITY OF NEW ENGLAND
11 HILLS BEACH RD.
BIDDEFORD, MAINE

UNIVERSITY OF NEW ENGLAND MARINE SCIENCE CENTER PIER
11 HILLS BEACH ROAD
BIDDEFORD, YORK COUNTY, MAINE

NO	DATE	ISSUE/REVISION	APP
8	6/5/2025	ADDRESS PB COMMENTS	DJB
7	4/16/2025	BIDDEFORD PERMIT APP.	DJB
6	9/17/2024	REVISED PERMIT SET	DJB
5	6/27/2024	REVISED PERMIT SET	DJB
4	9/14/2023	DEP PERMIT SET	DJB
3	6/28/2023	75% DESIGN SUBMISSION	DJB
2	2/15/2023	30% DESIGN SUBMISSION	DJB
1	12/9/2022	15% DESIGN SUB REV	DJB
0	11/11/2022	15% DESIGN SUBMISSION	DJB

SHEET NAME: **MISCELLANEOUS DETAILS (1 OF 5)**

SHEET NO.: **S-009**

DiCASTELNUOVO, VINNIE \\bost1v-fs02\Data_Storage\Working\UNIVERSITY OF NEW ENGLAND\2203703 UNE Marine Science Center Pier\00_CAD\Design\Sheets\2203703-S-009.dwg - 6/6/2025

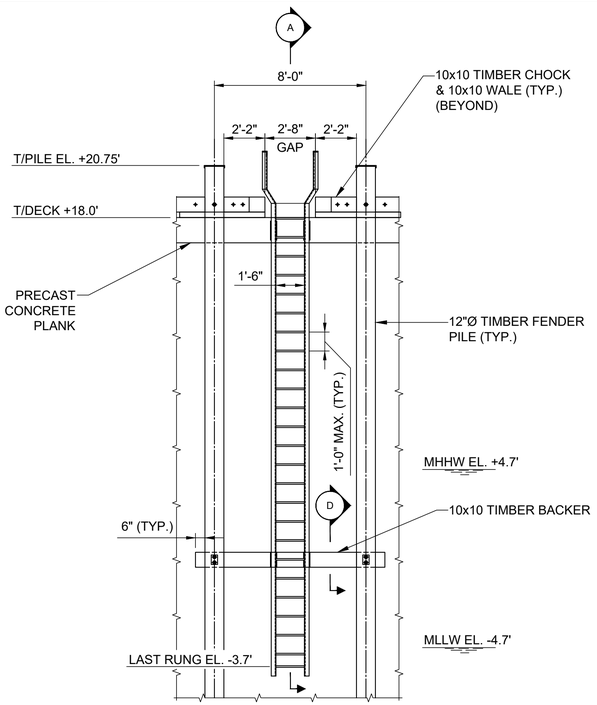

LADDER DETAIL

SCALE: 1/4" = 1'-0"

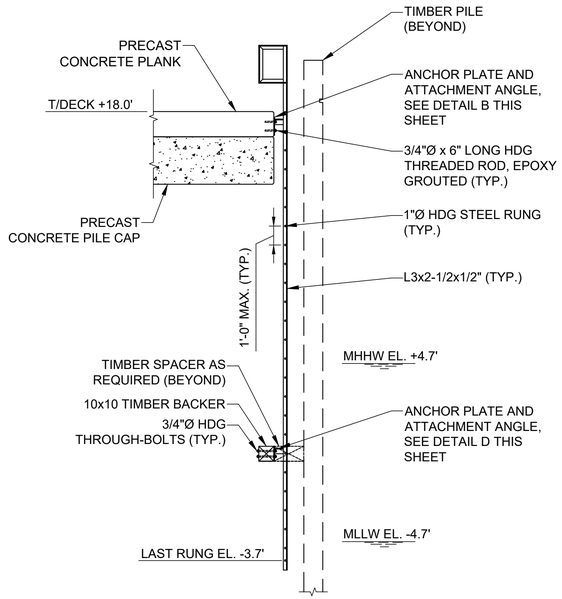

A LADDER SECTION

SCALE: 1/4" = 1'-0"

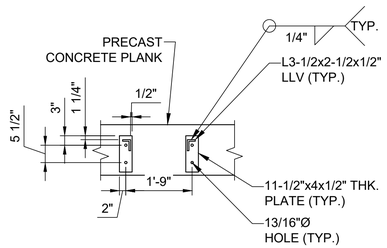

B LADDER CONNECTION (TOP)

SCALE: 1/2" = 1'-0"

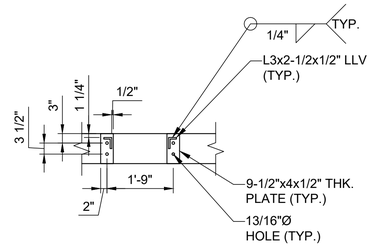

C LADDER CONNECTION (BOTTOM)

SCALE: 1/2" = 1'-0"

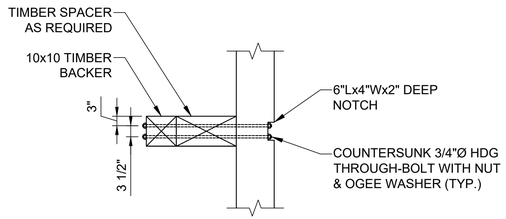

D TIMBER BACKER CONNECTION

SCALE: 1/2" = 1'-0"

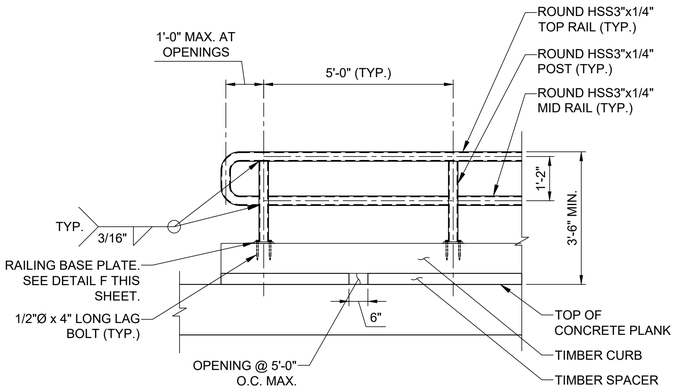

E RAILING SECTION

SCALE: 1/2" = 1'-0"

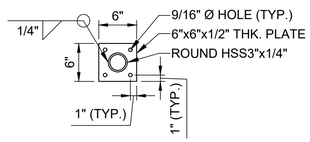

F RAILING BASEPLATE DETAIL

SCALE: 1" = 1'-0"

ELEVATION	MLLW	NAVD88*
BFE	+19.0	+14.0
HAT	+11.6	+6.6
MHHW	+9.7	+4.7
MHW	+9.3	+4.3
MSL	+4.8	-0.2
MLW	+0.3	-4.7
MLLW	0.0	-5.0

*PROJECT DATUM

FOR PERMIT

Attention:

0 1"

If this scale bar does not measure 1" then drawing is not original scale.

STATE OF MAINE
DANIEL J. BANNON
No. 13033
LICENSED PROFESSIONAL ENGINEER

06/10/2025

Designed:	DJB
Drawn:	JAM
Checked:	BJB
Approved:	BMM
P.E. No:	13033
GEI Project	2203703

GEI Consultants
GEI CONSULTANTS, INC.
5 MILK STREET
PORTLAND, ME 04101
(207)797-8901

UNE
UNIVERSITY OF NEW ENGLAND
11 HILLS BEACH RD.
BIDDEFORD, MAINE

UNIVERSITY OF NEW ENGLAND MARINE SCIENCE CENTER PIER
11 HILLS BEACH ROAD
BIDDEFORD, YORK COUNTY, MAINE

NO	DATE	ISSUE/REVISION	APP
8	6/5/2025	ADDRESS PB COMMENTS	DJB
7	4/16/2025	BIDDEFORD PERMIT APP.	DJB
6	9/17/2024	REVISED PERMIT SET	DJB
5	6/27/2024	REVISED PERMIT SET	DJB
4	9/14/2023	DEP PERMIT SET	DJB
3	6/28/2023	75% DESIGN SUBMISSION	DJB
2	2/15/2023	30% DESIGN SUBMISSION	DJB
1	12/9/2022	15% DESIGN SUB REV	DJB
0	11/11/2022	15% DESIGN SUBMISSION	DJB

SHEET NAME
MISCELLANEOUS DETAILS (2 OF 5)

SHEET NO.
S-010

DICASTELNUOVO, VINNIE \\bos1v-fs02\Data_Storage\Working\UNIVERSITY OF NEW ENGLAND\2203703.UNE Marine Science Center Pier\00_CAD\Design\Sheets\2203703-S-010.dwg - 6/6/2025

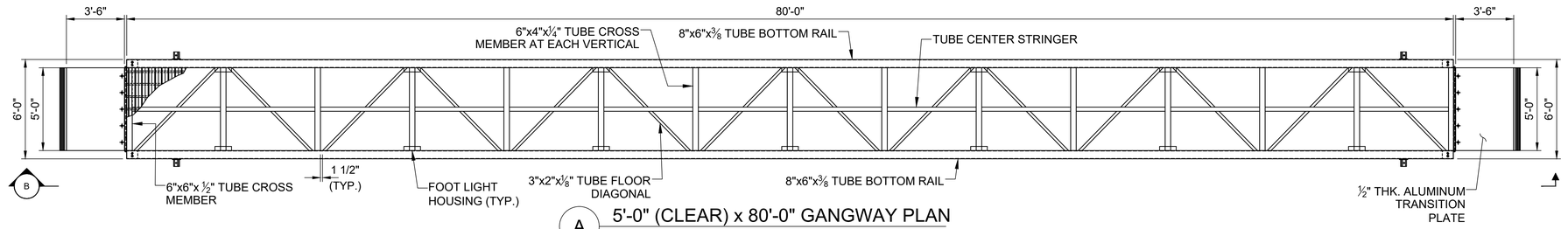

A 5'-0" (CLEAR) x 80'-0" GANGWAY PLAN

SCALE: 1/4" = 1'-0"

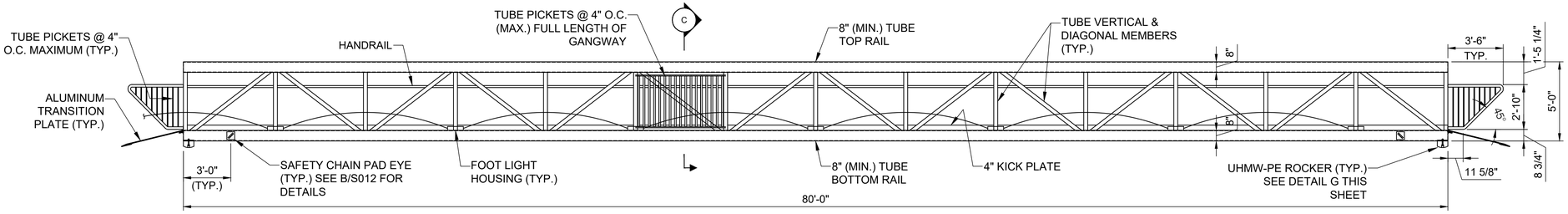

B GANGWAY ELEVATION

SCALE: 1/4" = 1'-0"

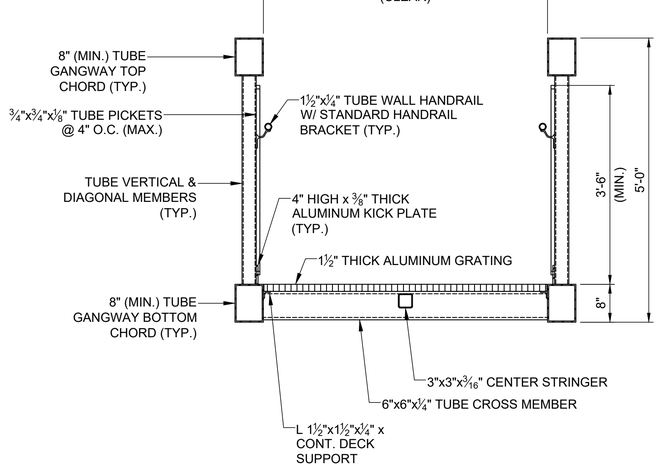

C TYPICAL GANGWAY SECTION

SCALE: 3/4" = 1'-0"

NOTE(S):
1. CONTRACTOR AND GANGWAY MANUFACTURER SHALL DETERMINE FINAL GANGWAY MEMBER SIZES AND SUBMIT TO ENGINEER FOR REVIEW AND APPROVAL.
2. ALUMINUM GRATING SHALL MEET ADA REQUIREMENTS.

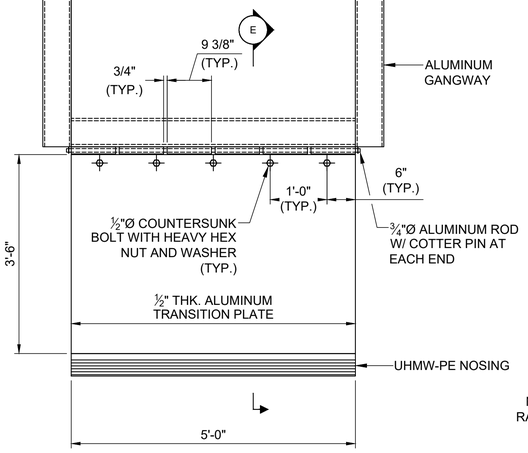

D TRANSITION PLATE DETAIL

SCALE: 3/4" = 1'-0"

NOTES:
1. CONTRACTOR SHALL DETERMINE FINAL GANGWAY MEMBER SIZES. MEMBERS ONLY SHOWN SCHEMATICALLY FOR REFERENCE.
2. CONTRACTOR SHALL SUBMIT FINAL GANGWAY SHOP DRAWINGS AND CALCULATION PACKAGE SIGNED AND SEALED BY A PROFESSIONAL ENGINEER LICENSED IN THE STATE OF MAINE.
3. ALL GANGWAY TUBE MEMBERS SHALL BE 6061-T6 ALUMINUM.
4. ALL GANGWAY TUBE MEMBERS SHALL BE CAPPED AND SEALED W/ ALUMINUM PLATES AT EXPOSED ENDS.

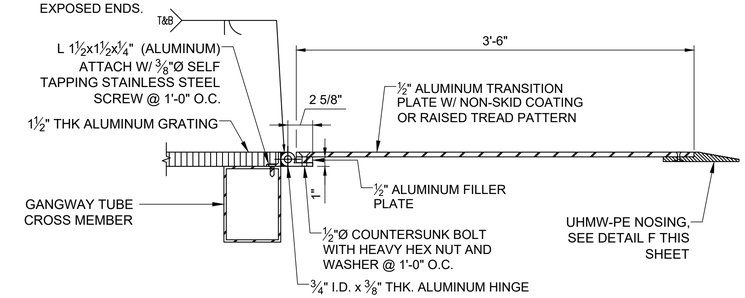

E GANGWAY TRANSITION PLATE SECTION

SCALE: 1-1/2" = 1'-0"

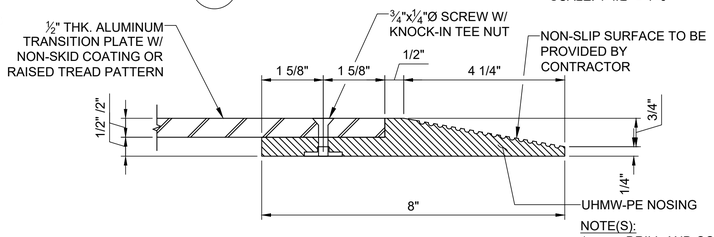

F UHMW-PE NOSING DETAIL

SCALE: 6" = 1'-0"

NOTE(S):
1. DRILL AND COUNTER BORE TRANSITION PLATES. COUNTERSINK HOLES FOR TEE NUTS TO TWICE BASE THICKNESS. SCREWS TO BE COUNTERSUNK INTO PLATE. INSTALL NEW SCREWS OVER SILICONE TO COVER EXPOSED ALUMINUM.
2. UHMW-PE NOSING DETAILS TO BE DETERMINED AFTER TRANSITION PLATE INSTALLATION AND SHALL BE IN COMPLIANCE WITH THE REQUIREMENTS SET FORTH IN ADA.

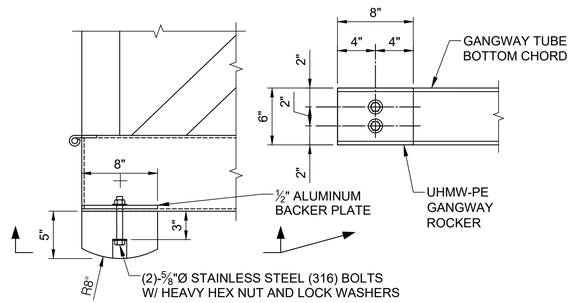

G GANGWAY ROCKER DETAIL

SCALE: 1-1/2" = 1'-0"

NOTES:
1. ROCKER MATERIAL SHALL BE VIRGIN UHMW-PE, BLACK IN COLOR.
2. ALUMINUM BACKER PLATE PLAN DIMENSIONS SHALL MATCH ROCKER PLAN DIMENSIONS.

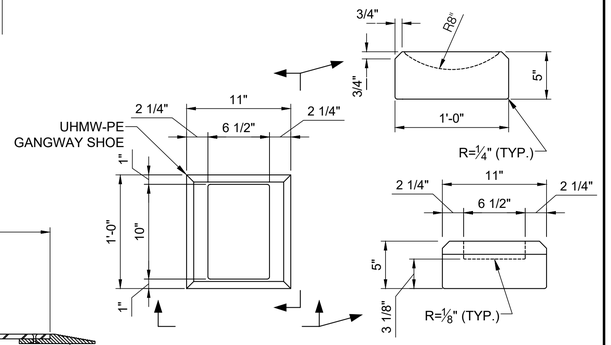

J GANGWAY SHOE DETAIL

SCALE: 1-1/2" = 1'-0"

NOTE: SHOE MATERIAL SHALL BE VIRGIN UHMW-PE, BLACK IN COLOR.

FOR PERMIT

ELEVATION	MLLW	NAVD88*
BFE	+19.0	+14.0
HAT	+11.6	+6.6
MHHW	+9.7	+4.7
MHW	+9.3	+4.3
MSL	+4.8	-0.2
MLW	+0.3	-4.7
MLLW	0.0	-5.0

*PROJECT DATUM

Attention:
0 1"
If this scale bar does not measure 1" then drawing is not original scale.

STATE OF MAINE — DANIEL J. BANNON No. 13033 — PROFESSIONAL ENGINEER — LICENSED
06/10/2025

Designed:	DJB
Drawn:	JAM
Checked:	BJB
Approved:	BMM
P.E. No:	13033
GEI Project	2203703

GEI Consultants
GEI CONSULTANTS, INC.
5 MILK STREET
PORTLAND, ME 04101
(207)797-8901

UNE
UNIVERSITY OF NEW ENGLAND
11 HILLS BEACH RD.
BIDDEFORD, MAINE

UNIVERSITY OF NEW ENGLAND MARINE SCIENCE CENTER PIER
11 HILLS BEACH ROAD
BIDDEFORD, YORK COUNTY, MAINE

NO	DATE	ISSUE/REVISION	APP
8	6/5/2025	ADDRESS PB COMMENTS	DJB
7	4/16/2025	BIDDEFORD PERMIT APP.	DJB
6	9/17/2024	REVISED PERMIT SET	DJB
5	6/27/2024	REVISED PERMIT SET	DJB
4	9/14/2023	DEP PERMIT SET	DJB
3	6/28/2023	75% DESIGN SUBMISSION	DJB
2	2/15/2023	30% DESIGN SUBMISSION	DJB
1	12/9/2022	15% DESIGN SUB REV	DJB
0	11/11/2022	15% DESIGN SUBMISSION	DJB

SHEET NAME: **MISCELLANEOUS DETAILS (3 OF 5)**

SHEET NO.: **S-011**

DICASTELNUOVO, VINNIE \\bos1v-fs02\Data_Storage\Working\UNIVERSITY OF NEW ENGLAND\2203703 UNE Marine Science Center Pier\00_CAD\Design\Sheets\2203703-S-011.dwg - 6/6/2025

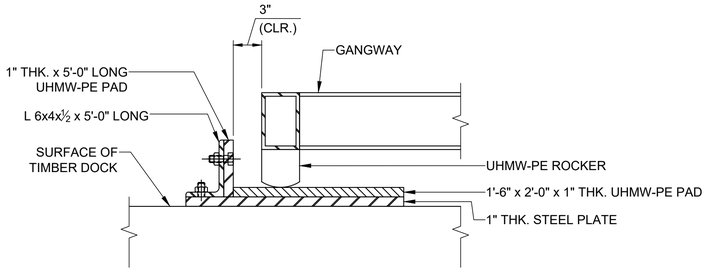

A GANGWAY LANDING AT DOCKS
SCALE: 1-1/2" = 1'-0"

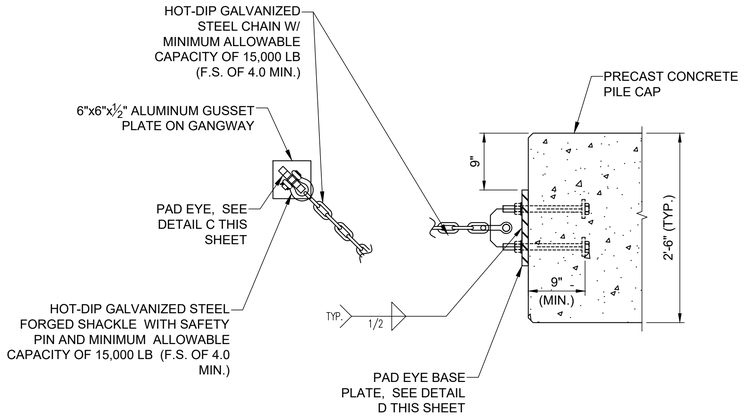

B SAFETY CHAIN ASSEMBLY
SCALE: 1" = 1'-0"

NOTE: CONTRACTOR TO DETERMINE ASSEMBLY LENGTH BASED ON PAD EYE LOCATION ON GANGWAY SUCH THAT UHMW-PE SHOE CANNOT MOVE OFF THE SUPPORTING PLATE.

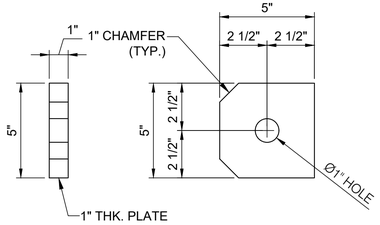

C PAD EYE DETAIL
SCALE: 3" = 1'-0"

NOTE: PAD EYE ON GANGWAY SHALL BE ALUMINUM.
PAD EYE ON PILE CAP SHALL BE HDG STEEL.

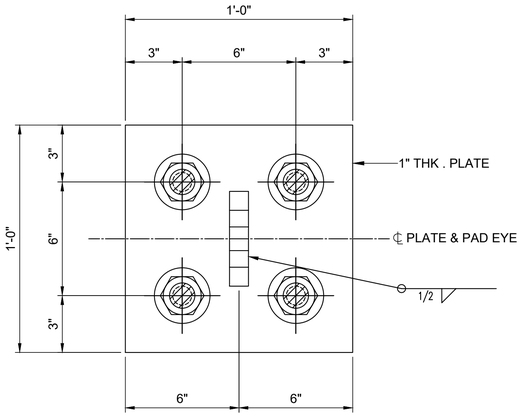

D PAD EYE BASE PLATE DETAIL
SCALE: 3" = 1'-0"

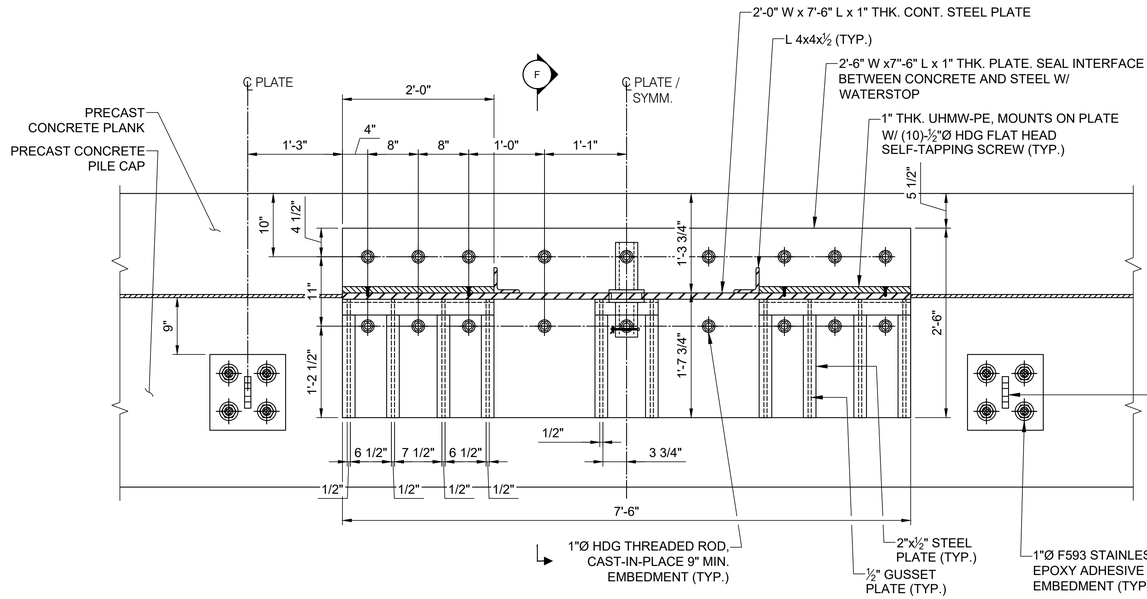

E FIFTH WHEEL ASSEMBLY - ELEVATION
SCALE: 1" = 1'-0"

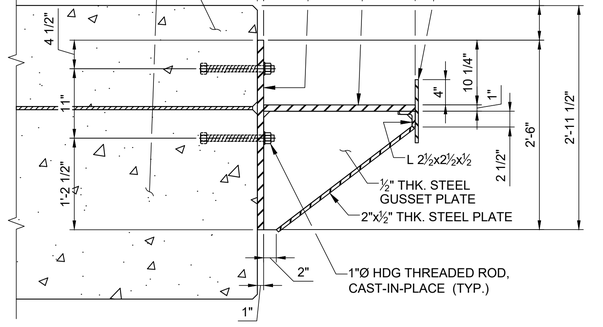

F FIFTH WHEEL ASSEMBLY - TYPICAL SECTION
SCALE: 1" = 1'-0"

ELEVATION	MLLW	NAVD88*
BFE	+19.0	+14.0
HAT	+11.6	+6.6
MHHW	+9.7	+4.7
MHW	+9.3	+4.3
MSL	+4.8	-0.2
MLW	+0.3	-4.7
MLLW	0.0	-5.0

*PROJECT DATUM

FOR PERMIT

Attention:
0 1"
If this scale bar does not measure 1" then drawing is not original scale.

STATE OF MAINE
DANIEL J. BANNON
No. 13033
LICENSED PROFESSIONAL ENGINEER
06/10/2025

Designed:	DJB
Drawn:	JAM
Checked:	BJB
Approved:	BMM
P.E. No:	13033
GEI Project	2203703

GEI Consultants
GEI CONSULTANTS, INC.
5 MILK STREET
PORTLAND, ME 04101
(207)797-8901

UNE
UNIVERSITY OF NEW ENGLAND
11 HILLS BEACH RD.
BIDDEFORD, MAINE

UNIVERSITY OF NEW ENGLAND MARINE SCIENCE CENTER PIER
11 HILLS BEACH ROAD
BIDDEFORD, YORK COUNTY, MAINE

NO	DATE	ISSUE/REVISION	APP
8	6/5/2025	ADDRESS PB COMMENTS	DJB
7	4/16/2025	BIDDEFORD PERMIT APP.	DJB
6	9/17/2024	REVISED PERMIT SET	DJB
5	6/27/2024	REVISED PERMIT SET	DJB
4	9/14/2023	DEP PERMIT SET	DJB
3	6/28/2023	75% DESIGN SUBMISSION	DJB
2	2/15/2023	30% DESIGN SUBMISSION	DJB
1	12/9/2022	15% DESIGN SUB REV	DJB
0	11/11/2022	15% DESIGN SUBMISSION	DJB

SHEET NAME
MISCELLANEOUS DETAILS (4 OF 5)

SHEET NO.
S-012

DICASTELNUOVO, VINNIE \\bos1v-fs02\Data_Storage\Working\UNIVERSITY OF NEW ENGLAND\2203703 UNE Marine Science Center Pier\00_CAD\Design\Sheets\2203703-S-012.dwg - 6/6/2025

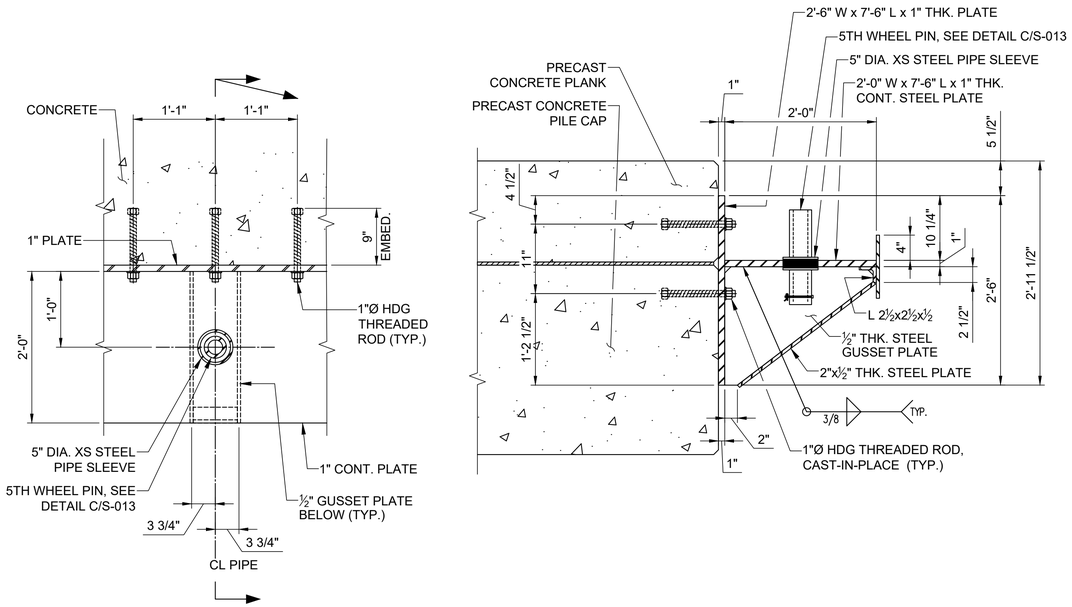

A TYPICAL 5TH WHEEL PLAN AND SECTION

SCALE: 1" = 1'-0"

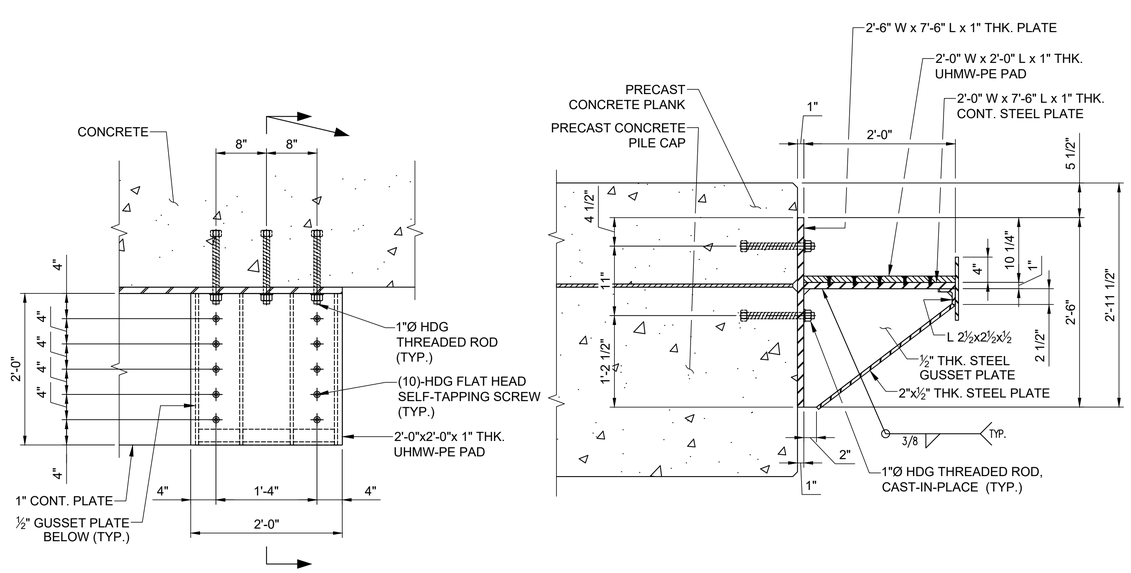

B TYPICAL UHMW-PE PAD DETAIL

SCALE: 1" = 1'-0"

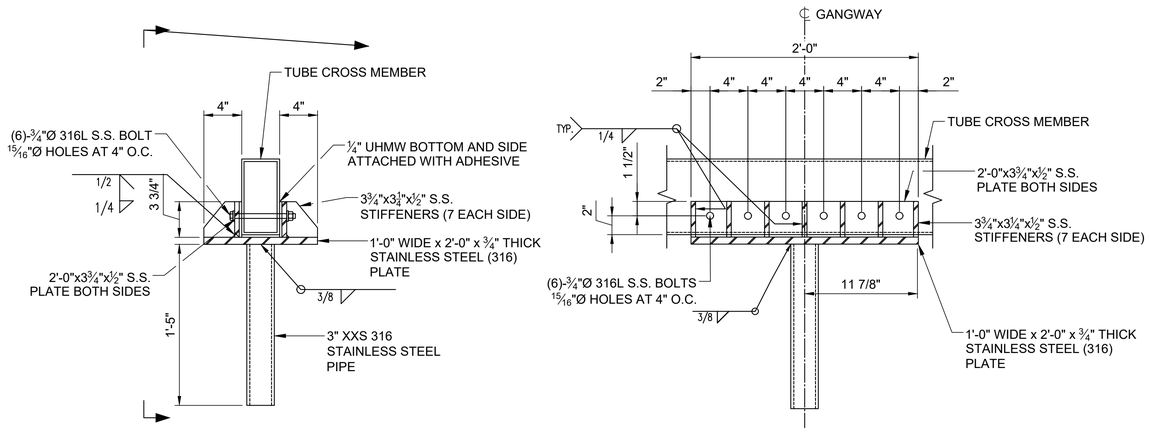

C 5TH WHEEL PIN DETAIL

SCALE: 1-1/2" = 1'-0"

ELEVATION	MLLW	NAVD88*
BFE	+19.0	+14.0
HAT	+11.6	+6.6
MHHW	+9.7	+4.7
MHW	+9.3	+4.3
MSL	+4.8	-0.2
MLW	+0.3	-4.7
MLLW	0.0	-5.0

*PROJECT DATUM

FOR PERMIT

Attention:

0 1"

If this scale bar does not measure 1" then drawing is not original scale.

STATE OF MAINE — DANIEL J. BANNON No. 13033 — LICENSED PROFESSIONAL ENGINEER

06/10/2025

Designed:	DJB
Drawn:	JAM
Checked:	BJB
Approved:	BMM
P.E. No:	13033
GEI Project	2203703

GEI Consultants

GEI CONSULTANTS, INC.
5 MILK STREET
PORTLAND, ME 04101
(207)797-8901

UNE
UNIVERSITY OF NEW ENGLAND

11 HILLS BEACH RD.
BIDDEFORD, MAINE

UNIVERSITY OF NEW ENGLAND MARINE SCIENCE CENTER PIER

11 HILLS BEACH ROAD
BIDDEFORD, YORK COUNTY, MAINE

NO	DATE	ISSUE/REVISION	APP
8	6/5/2025	ADDRESS PB COMMENTS	DJB
7	4/16/2025	BIDDEFORD PERMIT APP.	DJB
6	9/17/2024	REVISED PERMIT SET	DJB
5	6/27/2024	REVISED PERMIT SET	DJB
4	9/14/2023	DEP PERMIT SET	DJB
3	6/28/2023	75% DESIGN SUBMISSION	DJB
2	2/15/2023	30% DESIGN SUBMISSION	DJB
1	12/9/2022	15% DESIGN SUB REV	DJB
0	11/11/2022	15% DESIGN SUBMISSION	DJB

SHEET NAME

MISCELLANEOUS DETAILS (5 OF 5)

SHEET NO.

S-013

DICASTELNUOVO, VINNIE \\bos1v-fs02\Data_Storage\Working\UNIVERSITY OF NEW ENGLAND\2203703 UNE Marine Science Center Pier\00_CAD\Design\Sheets\2203703-S-013.dwg - 6/6/2025

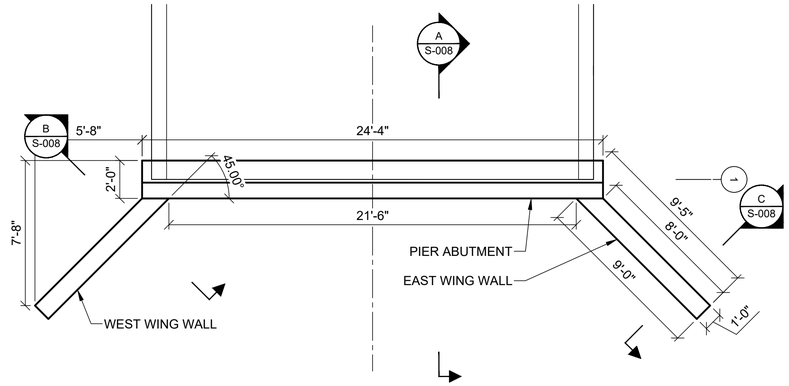

ABUTMENT PLAN
SCALE: SCALE: 3" = 1'-0"

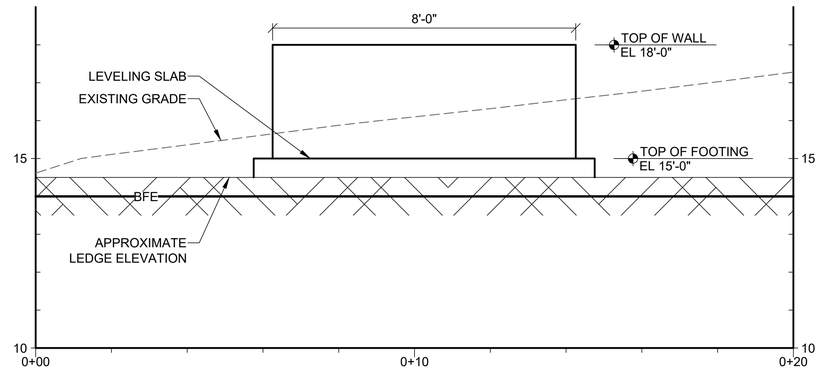

WEST WING WALL ELEVATION
SCALE: 6" = 1'-0"

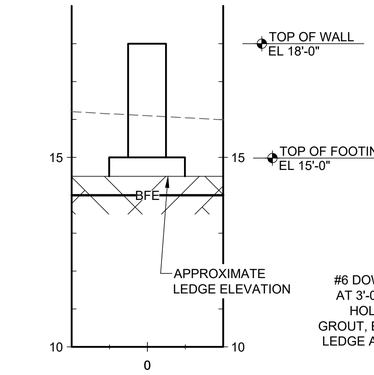

B WEST WING WALL SECTION
SCALE: 6" = 1'-0"

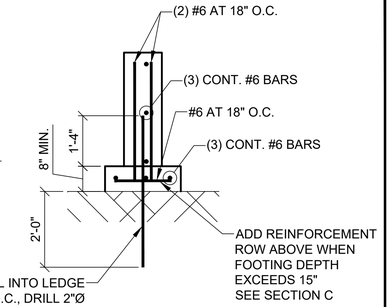

B SECTION
WEST WING WALL REINFORCEMENT
SCALE: 6" = 1'-0"

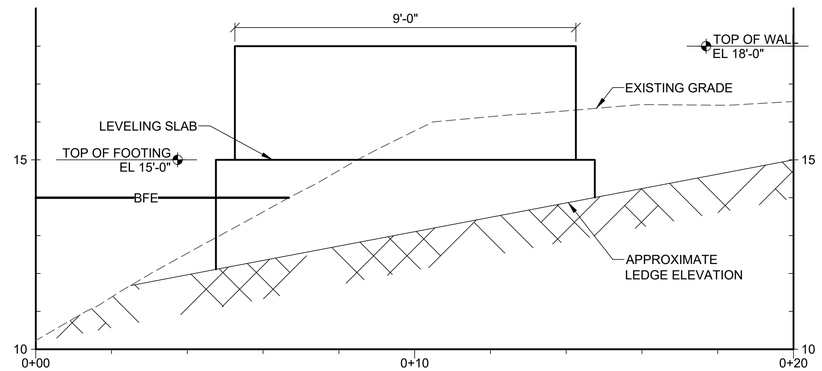

EAST WING WALL ELEVATION
SCALE: 6" = 1'-0"

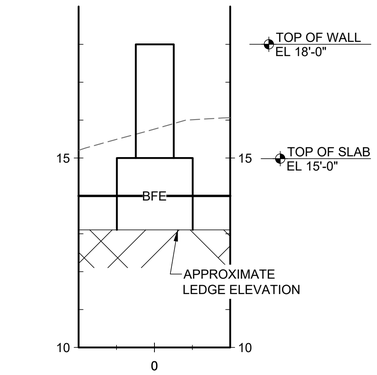

C EAST WING WALL SECTION
SCALE: 6" = 1'-0"

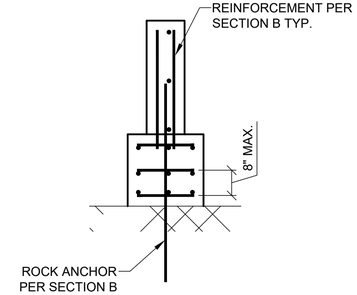

C SECTION
EAST WING WALL REINFORCEMENT
SCALE: 6" = 1'-0"

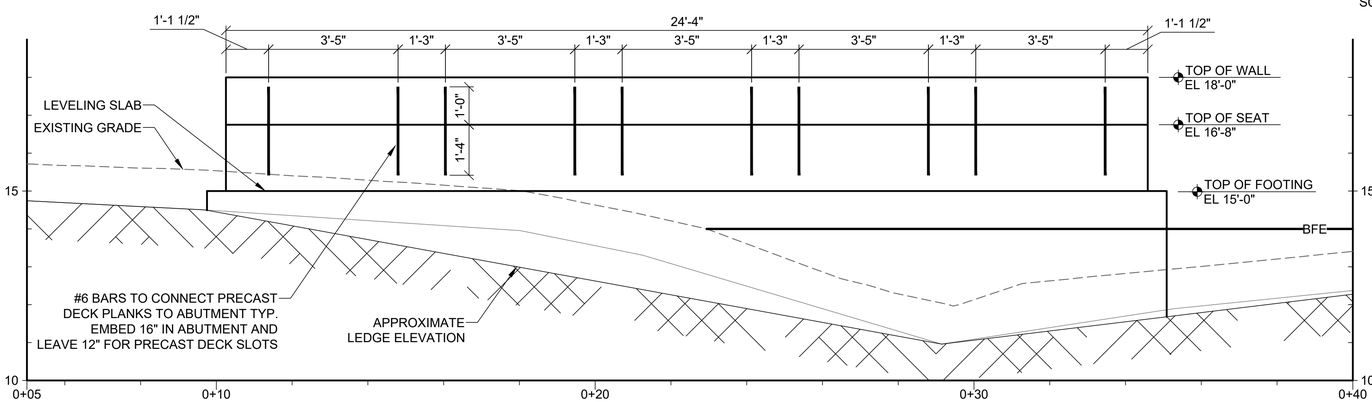

ABUTMENT ELEVATION A
SCALE: 3" = 1'-0"

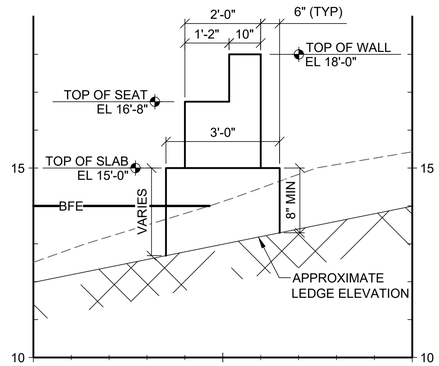

A ABUTMENT SECTION
SCALE: 6" = 1'-0"

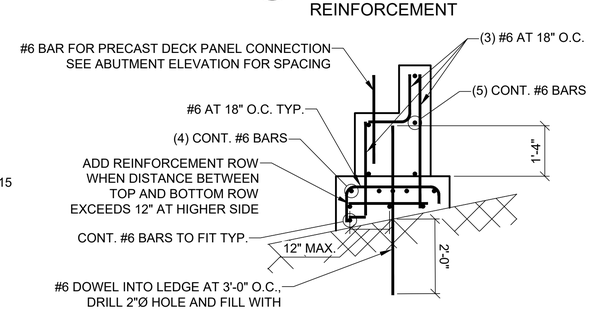

A SECTION
ABUTMENT REINFORCEMENT
SCALE: 6" = 1'-0"

FOR PERMIT

ELEVATION	MLLW	NAVD88*
BFE	+19.0	+14.0
HAT	+11.6	+6.6
MHHW	+9.7	+4.7
MHW	+9.3	+4.3
MSL	+4.8	-0.2
MLW	+0.3	-4.7
MLLW	0.0	-5.0

*PROJECT DATUM

Attention:
0 1"
If this scale bar does not measure 1" then drawing is not original scale.

STATE OF MAINE
DANIEL J. BANNON
No. 13033
LICENSED PROFESSIONAL ENGINEER
06/10/2025

Designed:	DJB
Drawn:	JAM
Checked:	BJB
Approved:	BMM
P.E. No:	13033
GEI Project	2203703

GEI Consultants
GEI CONSULTANTS, INC.
5 MILK STREET
PORTLAND, ME 04101
(207)797-8901

UNIVERSITY OF NEW ENGLAND
11 HILLS BEACH RD.
BIDDEFORD, MAINE

UNIVERSITY OF NEW ENGLAND MARINE SCIENCE CENTER PIER
11 HILLS BEACH ROAD
BIDDEFORD, YORK COUNTY, MAINE

NO	DATE	ISSUE/REVISION	APP
8	6/5/2025	ADDRESS PB COMMENTS	DJB
7	4/16/2025	BIDDEFORD PERMIT APP.	DJB
6	9/17/2024	REVISED PERMIT SET	DJB
5	6/27/2024	REVISED PERMIT SET	DJB
4	9/14/2023	DEP PERMIT SET	DJB
3	6/28/2023	75% DESIGN SUBMISSION	DJB
2	2/15/2023	30% DESIGN SUBMISSION	DJB
1	12/9/2022	15% DESIGN SUB REV	DJB
0	11/11/2022	15% DESIGN SUBMISSION	DJB

SHEET NAME: **ABUTMENT DETAILS**

SHEET NO.: **S-014**

DJCASTELNUOVO, VINNIE \\bost1-fs02\Data_Storage\Working\UNIVERSITY OF NEW ENGLAND\2203703 UNE Marine Science Center Pier\00_CAD\Design\Sheets\2203703-S-014.dwg - 6/6/2025

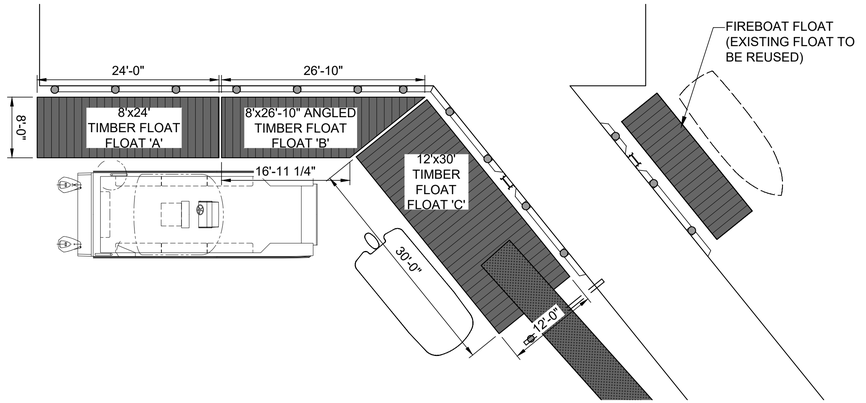

1 PLAN
FLOAT LAYOUT SCALE: 1" = 10'

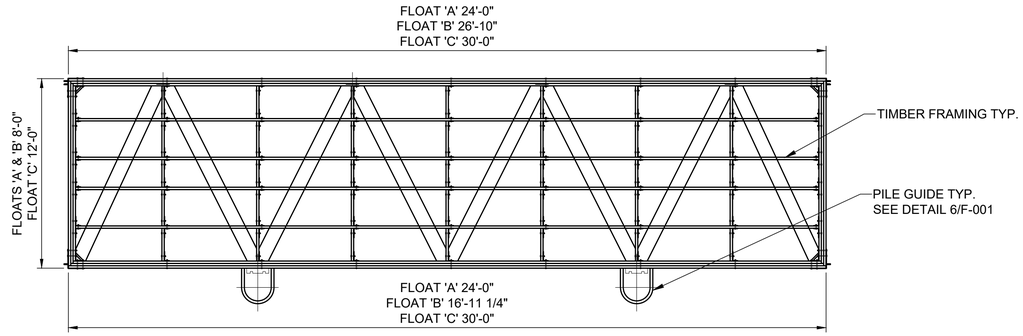

NOTES:
1. CONTRACTOR/FABRICATOR TO DETERMINE ACTUAL MEMBER SIZES PER LOADING REQUIREMENTS.

2 PLAN
TYP. FLOATING DOCK SCALE: 1" = 4'

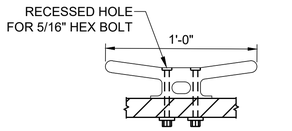

CLEAT LAYOUT:
FLOAT 'A' (4) @ EQ. SP ON SOUTH FACE
FLOAT 'B' (3) @ EQ. SP ON SOUTH FACE
FLOAT 'C' (4) @ EQ. SP ON WEST FACE

4 DETAIL
12" CLEAT SCALE: 2:1

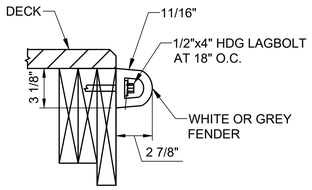

5 DETAIL
DOCK FENDER SCALE: 2:1

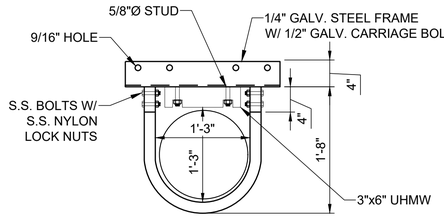

PILE GUIDE LAYOUT:
PROVIDE PILE GUIDES AT ALL TIMBER PILE LOCATIONS
FLOAT 'A' (3) REQ
FLOAT 'B' (4) REQ
FLOAT 'C' (4) REQ

6 DETAIL
PILE GUIDE SCALE: 1:1

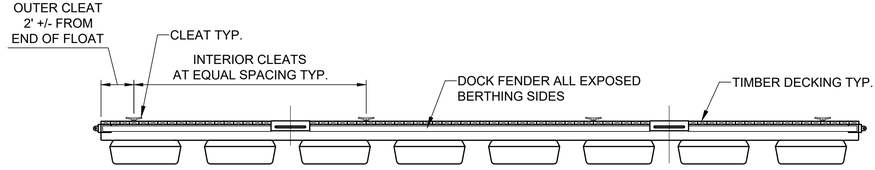

NOTES:
1. FLOTATION UNITS SHOWN ARE FOR GRAPHIC REPRESENTATION ONLY, CONTRACTOR/MANUFACTURER SHALL DETERMINE SIZE AND QUANTITY PER LOADING REQUIREMENTS.

3 ELEVATION
TYP. FLOATING DOCK SCALE: 1" = 4'

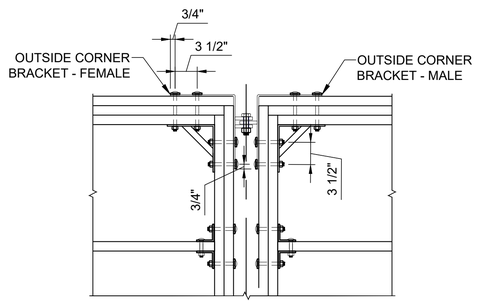

7 DETAIL
FLOAT CONNECTION SCALE: 1:1

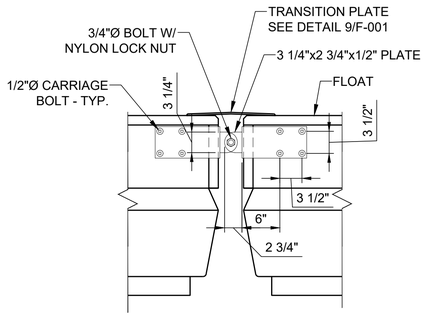

8 SECTION
FLOAT CONNECTION SCALE: 1:1

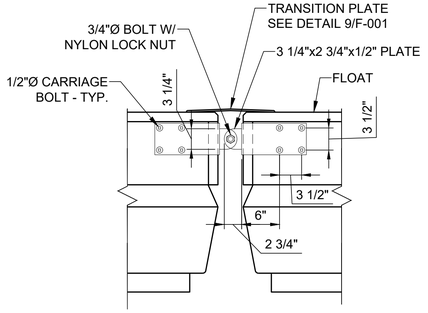

9 DETAIL
TRANSITION PLATE SCALE: 1:1

0 10 20
SCALE, FEET

0 1 2 4
SCALE, FEET

0 40 80
SCALE, FEET

ELEVATION	MLLW	NAVD88*
BFE	+19.0	+14.0
HAT	+11.6	+6.6
MHHW	+9.7	+4.7
MHW	+9.3	+4.3
MSL	+4.8	-0.2
MLW	+0.3	-4.7
MLLW	0.0	-5.0

*PROJECT DATUM

FOR PERMIT

Attention:
0 1"
If this scale bar does not measure 1" then drawing is not original scale.

STATE OF MAINE
DANIEL J. BANNON
No. 13033
LICENSED PROFESSIONAL ENGINEER
06/10/2025

Designed:	DJB
Drawn:	JAM
Checked:	BJB
Approved:	BMM
P.E. No:	13033
GEI Project	2203703

GEI Consultants
GEI CONSULTANTS, INC.
5 MILK STREET
PORTLAND, ME 04101
(207)797-8901

UNIVERSITY OF NEW ENGLAND
11 HILLS BEACH RD.
BIDDEFORD, MAINE

UNIVERSITY OF NEW ENGLAND MARINE SCIENCE CENTER PIER
11 HILLS BEACH ROAD
BIDDEFORD, YORK COUNTY, MAINE

NO	DATE	ISSUE/REVISION	APP
8	6/5/2025	ADDRESS PB COMMENTS	DJB
7	4/16/2025	BIDDEFORD PERMIT APP.	DJB
6	9/17/2024	REVISED PERMIT SET	DJB
5	6/27/2024	REVISED PERMIT SET	DJB
4	9/14/2023	DEP PERMIT SET	DJB
3	6/28/2023	75% DESIGN SUBMISSION	DJB
2	2/15/2023	30% DESIGN SUBMISSION	DJB
1	12/9/2022	15% DESIGN SUB REV	DJB
0	11/11/2022	15% DESIGN SUBMISSION	DJB

SHEET NAME
FLOAT PLAN AND DETAILS

SHEET NO.
F-001

DJCASTELNUOVO, VINNIE - \\geiconsultants.com\data\Data_Storage\Working\UNIVERSITY OF NEW ENGLAND\2203703 UNE Marine Science Center Pier\00_CAD\Design\Sheets\2203703-F-001.dwg - 6/6/2025

CONFIDENTIAL
MEMORANDUM

To: Biddeford Planning Board

From: Harry B. Center, II, Esq., City Solicitor

Date: June 11, 2025

RE: UNE Pier Application

I am writing to supplement my memorandum dated June 9, 2025 regarding the pending University of New England pier application. Citizens have raised the issue regarding TEC Associates review of the initial application pursuant to the Harbor ordinance (Ordinance 74-35). Again, I caution the planning board that its review of this matter must be limited to the applicable city ordinances. There is not a provision within Article 14 §15(C), in the Shoreland zoning ordinance or site plan review, which authorizes the planning board to review the permission requirement in the city's Harbor ordinance.

Attached please find my memorandum dated July 8, 2024, which was sent to the former city manager. In that memorandum, I address the role of the harbormaster, specifically citing the city council's policy committee meeting of August 7, 2023, during which the current ordinance was presented and ultimately adopted by the council. Because the permission required from the harbormaster is not an opportunity to approve or deny an application for a pier, and the harbormaster role is "nothing but a facilitator," I provided a legal opinion that concluded an engineering firm could be delegated the task of reviewing the pier application and determining whether the application was complete. As stated in the memorandum, it is common for the City of Biddeford, including this planning board, to engage outside experts, such as traffic engineers, environmental engineers, and individuals to perform soil or water tests. In this matter, the city appropriately delegated the task of the harbormaster facilitating an applicant request pursuant to the ordinance. Lastly, I note that should there have been any interested party who would have had standing, the time for any judicial review of the city's activity in July and August 2024 has long passed.

CONFIDENTIAL
MEMORANDUM

To: City Manager James Bennett

From: Harry B. Center, II, Esq., City Solicitor

Date: July 8, 2024

RE: Opinion and Interpretation of City Code 74-35

You have asked me to provide you with my interpretation and legal opinion regarding City of Biddeford Code of Ordinances Sec. 74-35, which relates to construction of marine piers. This code provision has become the subject of interpretation as a result of the University of New England's recent application for a marine pier. This current ordinance provision was recently amended in September, 2023. An August 9, 2023 policy committee meeting approved a proposed draft ordinance that was submitted by Chair of the Harbor Commission, John Schafer. Set forth below is the full section of the current ordinance:

> *Sec. 74-35. Construction of wharf, pier or landing regulated.*
>
> *[Ord. of 4-20-1993, S 26-29; Ord. No. 2007.11, 3-6-2007; amended 2-19-2013 by Ord. No. 2013.7; 9-19-2023 by Ord. No. 2023.1021*

(a) *No additions, alterations, new construction or/or changes to an existing wharf, pier or landing shall be made without prior permission of the Harbormaster.*

(b) *Permission for the construction of any new wharf or pier within the jurisdictional limits of the City shall not be granted without approval of the Harbormaster, along with federal, state, and local governing authorities.*

(c) *To obtain permission for any new wharf or pier, the applicant must provide the following information:*

(1) *A formal boundary survey that has been documented at the Registry of Deeds.*

(2) *A copy of the boundary survey showing the littoral zone, established by extending property lines seaward.*

(3) *A location map from a portion of a USGS topographic map or coastal chart.*

(4) *Distance to navigable channels or any federal navigation project.*

(5) *Mean high- and low-water boundary.*

(6) *A plan view on the drawing(s) that shows the location and dimensions of the applicant's structure(s) in relation to the applicant's property lines.*

(7) *A typical cross section/side view of the applicant's structures on the drawing(s).*

(8) *Evidence that owners of abutting properties have been notified of the applicant's intended project.*

(9) *Evidence that the 1) Maine Historic Preservation Commission, 2) Aroostook Band of Micmac, 3) Passamaquoddy Tribe of Indians: Pleasant Point; Indian Township, 4) Houlton Band of Maliseet Indians, and 5) Penobscot Indian Nation have been notified of the applicant's intended project.*

(10) *Completed applications to the Army Corps of Engineers, Department of Environmental Protection and Biddeford Code Enforcement. A regulatory permit from the Saco River Corridor Commission may also be required in some instances.*

(d) *The process to obtain permission for any new wharf or pier shall be facilitated by the Harbormaster. Initially, the Harbormaster shall be available to guide the applicant through the application process and finally, to sign off that all regulatory approvals have been obtained for construction.*

I have previously provided you with opinions relating to allegations regarding the current City of Biddeford Harbormaster's prejudicial and biased statements regarding the potential University of New England pier. I have opined those statements made by the current harbormaster prior to any formal application from UNE, such as "I will never approve the pier application in that location," constituted bias and a violation of the University's due process rights. You removed the current harbormaster from consideration of the UNE marine pier application. While the City determines who, on behalf of the City, will function in the role as harbormaster regarding the UNE marine pier application, you have asked me to review and provide you with a legal opinion as to what conditions and criteria would be applied to the marine pier application on behalf of the City, pursuant to the aforementioned code provisions.

The interpretation of the provisions of a municipal ordinance is a question of law. *Rockland Plaza Realty Corporation v. City of Rockland, 2001 Me. 81.* Numerous Maine Supreme Court Opinions provide that ordinance provisions should be given their plain and ordinary meaning, and any interpretation of ordinance language should be done in a manner to avoid absurd, illogical, or inconsistent results. *Wright v. Town of Kennebunkport, 1998 Me. 184.* There is a legal presumption favoring the validity of municipal ordinances and a municipal ordinance's constitutionality and reasonableness will be presumed. *Gabriel v. Town of Old Orchard Beach, 390 A.2d 1065 (Me. 1978).* In construing and interpreting municipal ordinances, a reviewing Court may review the purpose of the enactors to determine the intent of the ordinance. *Natale v. Kennebunkport Board of Zoning Appeals, 363 A.2d 1372 (Me. 1976).* Applying these legal principles regarding ordinance interpretation, I can provide you with the following opinions.

Subsection (a) and (b) of Sec. 74-35 expressly provide that any new construction of a pier, within the jurisdictional limits of the City of Biddeford, requires permission of the harbormaster. The issue is what criteria the harbormaster applies when determining whether to "grant permission." On its face, it would appear that the harbormaster has the authority to "deny" permission of a pier application. However, applying the aforementioned legal principles when reviewing the ordinance at (c) (1-10), it is my opinion that the role of a harbormaster granting permission is limited to a review of the information set forth in items 1-10. The harbormaster's review is limited to inspection of the items for completeness, then upon the applicant's receipt of all other agency's approval, permission is then granted to the applicant to proceed to the City Planning Board and Code Office.

The ordinance provides at subsection (d), that the harbormaster shall ***guide*** the applicant through the application process, and ***"sign off that all regulatory approvals have been obtained for construction."*** In my opinion, a plain and ordinary interpretation of the entire ordinance set forth in Section 74-35 leads to the conclusion that the harbormaster's role in granting permission is limited to an initial determination that all of the items set forth in (c) (1-10) have been completed and submitted to the appropriate governing bodies, and then a subsequent determination as to whether those agencies have granted approval.

When interpreting ordinance provisions, the court looks to the legislative intent of the enacting body. A review of the intent of the City Policy Committee and ultimately the City Council's intent supports my opinions regarding interpretation of the ordinance. Ordinance 74–35 was initially reviewed by the city Council subcommittee, the Policy Committee. At a public meeting on August 7, 2023, chairperson of the Harbor Commission, John Schaeffer, presented the proposed ordinance. During that meeting, City Counselor, Norman Belanger asked Mr. Schaeffer, whether the harbormaster was the person who issued a permit for a new pier. Mr. Schaeffer expressly responded, *"that is absolutely not the case."* Mr. Schaeffer further explained that the harbormaster is *"nothing but a facilitator"*. This legislative intent, combined with reading the ordinance as a whole, leads to the legal conclusion that the harbor-master's role is to guide an applicant through the process, and determine whether the items in subsection (c) (1-10), are complete and ultimately approved by the other agencies.

Construing the ordinance in its entirety and a review of the legislative (City Council) intent unequivocally evidences a clear intent defining the role of the harbormaster as a facilitator. An applicant for a new pier must, as a condition precedent, initially establish that items 1 through 10 are complete. Upon return to the harbormaster following completion of those items and receipt of approval from the regulatory bodies, the harbormaster, then ***"signs off"***. The express use of the term ***"signs off"*** establishes the role of the harbormaster in the process.

It is further my opinion that review of items 1 through 10 are not exclusively delegated to the appointed harbormaster. Facilitation and review of those items may be delegated to a person or entity with technical expertise, such as an engineering firm. It is common for the City to engage independent experts to review permit applications such as traffic engineers, environmental engineers and others depending on the nature of the approval sought. Because the review process is not the final approval by the City, such delegation is permissible. It is important to note that the harbormaster, the code enforcement officer and other individuals in city offices, such as

planners and assistant code personnel, are generally not licensed, professional engineers, nor do their approvals act as performing those expert reviews. The Planning Board, Code Office and other City employees rely on submissions from the applicant such as a stamped professional engineer's approval on plans submitted, structural plans, and other highly technical information that is beyond the scope of city officials. The city does not want to be held liable for the soundness of any project, nor the technical approvals of those projects. City officials rely on the applicant's expert's submitted plans and/or approvals from other regulatory bodies such as the Army Corp of Engineers and the State Department of Environmental Protection in the case of marine piers.

It is my legal opinion that the harbormaster does not issue or approve a permit to construct a marine pier. Pursuant to the ordinance, the harbormaster acts as a facilitator to ensure the prerequisites have been submitted, then once all those approvals are obtained then performs the ministerial act of signing off/granting permission to proceed to the City Planning Board and Code Office. The City Shoreland Zoning Ordinance, as well as the duties of the code enforcement officer to issue permits for structures, provide the city with the necessary final review of the process and protect the City's interests. The harbormaster role pursuant to the ordinance is limited to being a facilitator of the application and ultimately signing off, moving the application forward to the Planning Board and Code Office.

CONCLUSION

1. Reading the ordinance as a whole and applying legal principles for interpretation of the ordinance, the harbormasters role is as a facilitator to ensure that an applicant for a marine pier has completed items in section (c) 1-10 as a condition precedent.
2. The City may delegate the harbormaster tasks (facilitation of submission to AOC, DEP, etc.) and ensuing completeness, to a third party such as an independent engineer or firm.
3. Once an applicant has received information that includes APPROVALS from the agencies that have expertise in reviewing such projects, the harbormaster performs that ministerial task of granting permission to the applicant or "signs off", pursuant to section (d) of the ordinance.
4. Once the harbormaster signs off on the marine pier application, the Planning Board and Code office review the project and ultimately decide whether grant approval and issue the appropriate permits, pursuant to the City's Shoreland Zoning Ordinance and Floodplain Management Ordinance.

CONFIDENTIAL
MEMORANDUM

To: Biddeford Planning Board

From: Harry B. Center, II, Esq., City Solicitor

Date: June 9, 2025

RE: UNE Pier Application

The following sets forth my opinions and responses to the various questions raised during the initial planning board meeting regarding the University of New England pier application. This Memorandum also addresses questions from the planning department and is in response to comments made by the public. Some responses are set forth by reference to the attached prior documentation, opinion memorandum, and correspondence.

I. SCOPE OF PLANNING BOARD REVIEW

Initially as City Attorney, I must advise the planning board as to the criteria for legal review of this application. This project falls within the jurisdiction of the city's shoreland zoning ordinance. Pursuant to the city land use ordinances, this project is also subject to site plan review. Those ordinances provide the planning board with jurisdiction to review and vote on this project.

The planning board's review of the UNE pier application is pursuant to Article XIV of the city's, shoreland zoning ordinance Section 15 (C). That ordinance provision, attached hereto, provides the only basis for planning review and subsequent granting of approval or denial. Just last week, the Maine Supreme Judicial Court in *Newfield Sand v. Town of Newfield, 2025 ME 45,* confirmed the well-established legal authority relating to a planning board's application of ordinance provisions when making any determination to grant or deny an application. The court stated, that any conditions imposed by a municipal planning board must be authorized by the enabling ordinance and defined clearly when a permit is considered, so that the applicant understands what is required, *Newfield Sand v. Town of Newfield* citing *Cobbossee Development Group v. Town of Winthrop 585 A.2d 190 (ME. 1981).* Permit requirements and ordinances lacking specificity are vulnerable to challenge for vagueness or excessive delegation of the municipalities legislative authority *Doane v. Department of Health and Human Services 2021 ME 28.*

At the May 21, 2025 initial planning board meeting, much public comment related to the proposed location of the pier, the current of the river in the area where the proposed pier would be located, the depth of the water at that location and other issues, including, but not limited to moorings in the vicinity of the pier location. None of those concerns raised are within the jurisdiction of the planning board pursuant to Article XIV, §15(C.)

Regarding the issue of the planning board's jurisdiction, and what standards the planning board may apply, considering whether or not to approve this project, I advise the planning board to also rely upon recommendations from the City of Biddeford planning department staff. I have asked staff to review whether I am missing any provisions that would allow the planning board to consider water depth at the location of the proposed pier, impact of the proposed pier on navigation, impact of the proposed pier on the current of the river or any of the other many navigation and waterway related concerns, raised by many of the speakers at the public hearing. To date, I have not been advised of any such provisions are within the planning board review process.

II. REMOVAL OF CURRENT HARBORMASTER FROM UNE PIER PROCESS

Attached is a memorandum that I drafted for the former city manager on May 15, 2024 regarding the UNE pier application and issues regarding the Biddeford Harbormaster and the Biddeford Harbor commission. That memorandum is titled "confidential" because it contained my legal advice to the city manager regarding numerous issues involved at that time. A review of the attached memorandum starting with the "issue" section provides background. You may note that the University of New England is arguing that the late, former harbormaster actually gave his approval verbally for the current requested site.[1] Please review the memorandum, as it explains the legal basis for why the harbormaster's role in this process was changed as well as the legal basis for removing current Harbor commission from the city's review process.

Enclosed, please find a memorandum from the former city manager to the Mayor, City Council, and the University of New England, dated May 22, 2024. In that memorandum, the city's action relating to the pier was set forth in writing. Additionally, I attach a letter dated May 22, 2024 from the former city manager to the current harbormaster which advised the current harbormaster that he would not be handling any review or approval of the UNE project and the basis for that decision.

III. HARBORMASTER PRO TEM PRIOR PERMISSION

Enclosed as a July 22, 2024 letter (I do not have a signed copy) from an independent engineering, firm, TEC Associates addressed to the city, outlining the fee and scope of project for TEC Associates to act as a harbormaster pro tem. The harbormaster's role in reviewing pier applications pursuant to city code Section 74-35, is limited to the Harbormaster being "nothing but a facilitator."[2] This engineering firm reviewed the UNE application in the role of Harbormaster Pro Tem pursuant to the city ordinance. On August 19, 2024, the city of Biddeford was provided notice that the application was complete and in the role of temporary harbormaster TEC Associates granted permission pursuant to the ordinance. The sole legal basis for a harbormaster to approve or deny a pier application is to **facilitate and guide the applicant's application process and ensure that the application is complete.** The city's harbor ordinance has no legal standards in place to review a pier application for whether the water depth is appropriate, there is an impact on current navigation, or other arguments made by the public at the May 21, 2025 public hearing. The same legal principles that limit a planning board's ability to review an application, also apply to

[1] The City has rejected that position.

[2] Quotation from former Harbor Commission Chair John Schaefer to the City Council policy committee on August 7, 2023, explaining the intent in drafting code Provision 74-35.

any review by a harbormaster. A citizen applying to their government for approval is constitutionally entitled to be made aware of the legal standards, and only those legal standards validly adopted by the governmental body may be applied to appeal, to approve, or deny a given application. I also attach a memorandum I sent to the former city manager on July 8, 2024, explaining the legal support for the principles, as well as the limitations of the harbormaster's review of a pier application.

IV. POTENTIAL PLANNING BOARD "DENIAL WITHOUT PREJUDICE"

I have been asked whether a member of the planning board may make a motion to "deny without prejudice" regarding the pier application. Any such denial must be based upon a standard that is applicable on this issue. The planning board may not arbitrarily deny a project based upon a desire to simply postpone it. There is no specific provision that I could find to authorize a "denial without prejudice." For guidance, a review of the zoning board of appeals ordinance provides that an applicant who has been denied may make another application two years after that denial or make a substantial change in the request. I would be very concerned about my ability to support a "denial without prejudice" if it is simply intended to delay the project and not based upon any of the standards set forth in the shoreland zoning ordinance.

The planning board enabling ordinance states that it must adopt Roberts Rules of Order. Under Roberts Rules a motion to table either to a date certain or indefinitely may be made. However, I caution you that such a motion without a specific Basis, i.e., needs more information on a subject that is within the planning board jurisdiction, an appeal could be taken from an arbitrary motion to table. I see no legal support for a motion to deny, without prejudice. The planning board may choose to grant the permit for the pier, deny it, or move to table it. Any such final action will first be appealed to the zoning board of appeals, then to the courts.

V. MOORINGS

You have asked me for advice regarding the issue of the placement of moorings in the area where the proposed pier would be located. The planning board has no jurisdiction regarding the issue of moorings. Similar to the analogy of a property ownership dispute between an applicant and another party, the planning board does not have jurisdiction over the legal issues of title or ownership. There are no provisions in the Shoreland zoning ordinance which the planning board would use to review the issue of the impact on moorings when a pier is constructed. Arguments by the public about ownership of the moorings, relocation of the moorings, and other concerns are not subject to the planning board review of this project.

Attached is a copy of the city's mooring permit application. Within that document, it is stated that the city may move the location of a mooring at the city's discretion at any time. Further, while it is not necessary for the planning board to consider all of these issues, a mooring permit is issued for only one year, and does not give the permit holder a legal ownership in any rights in the waterway. Even if the mooring issue was within the planning board's jurisdiction, the planning board would not require a pier, dock, or wharf applicant to compensate mooring permitees who may have moorings adjacent to a potentially constructed pier, dock, or wharf. This issue is not within the scope of the planning boards review.

CITY OF BIDDEFORD
SHORELAND ZONING
ORDINANCE
ARTICLE XIV
SECTION 15(C)

g. A vegetated buffer area is established within 25 feet, horizontal distance, of the normal high-water line of a water body, tributary stream, or upland edge of a wetland when a natural buffer area does not exist. The buffer area must meet the following characteristics:

i. The buffer must include shrubs and other woody and herbaceous vegetation. Where natural ground cover is lacking, the area must be supplemented with leaf or bark mulch;

ii. Vegetation plantings must be in quantities sufficient to retard erosion and provide for effective infiltration of stormwater runoff;

iii. Only native species may be used to establish the buffer area;

iv. A minimum buffer width of 15 feet, horizontal distance, is required, measured perpendicularly to the normal high-water line or upland edge of a wetland;

v. A footpath not to exceed the standards in Section 15P2a, may traverse the buffer.

6. Notwithstanding the requirements stated above, stairways or similar structures may be allowed with a permit from the Code Enforcement Officer, to provide shoreline access in areas of steep slopes or unstable soils provided; that the structure is limited to a maximum of four feet in width; that the structure does not extend below or over the normal high-water line of a water body or upland edge of a wetland, (unless permitted by the Department of Environmental Protection pursuant to the Natural Resources Protection Act, 38 M.R.S.A. § 480-C); and that the applicant demonstrates that no reasonable access alternative exists on the property.

C. Piers, docks, wharfs, bridges and other structures and uses extending over or below the normal high-water line of a water body or within a wetland.
[Amended 2-2-2010 by Ord. No. 2009.98; 10-18-2016 by Ord. No. 2016.69]

1. Except as provided in Section 15C11 and Section 15X7, no more than one pier, dock, wharf or similar structure extending or located below the normal high-water line of a water body or within a wetland is allowed on a single residential lot; except that when a single lot contains at least twice the minimum shore frontage as specified in Section 15A, a second structure may be allowed and may remain as long as the lot is not further divided.

2. Access from shore shall be developed on soils appropriate for such use and constructed so as to control erosion.

3. The location shall not interfere with existing developed or natural beach areas.

4. The facility shall be located so as to minimize adverse effects on fisheries.

5. The facility shall be no larger in dimension than necessary to carry on the activity and be consistent with the surrounding character and uses of the area. A temporary pier, dock, or wharf in nontidal waters shall not be wider that six feet for noncommercial uses.

6. No new structure shall be built on, over or abutting a pier, wharf, dock or other structure extending beyond the normal high-water line of a water body or within a wetland unless the structure requires direct access to the water body or wetland as an operational necessity.

7. New permanent piers and docks on nontidal waters shall not be permitted unless it is clearly demonstrated to the Planning Board that a temporary pier or dock is not feasible, and a permit has been obtained from the Department of Environmental Protection, pursuant to the Natural Resources Protection Act.

8. No existing structures built on, over or abutting a pier, dock, wharf or other structure extending beyond the normal high-water line of a water body or within a wetland shall be converted to residential dwelling units in any district.

9. Except in the General Development District, structures built on, over or abutting a pier, wharf, dock or other structure extending beyond the normal high-water line of a water body or within a

wetland shall not exceed 20 feet in height above the pier, wharf, dock or other structure.

NOTE: Permanent structures projecting into or over water bodies shall require a permit from the Department of Environmental Protection pursuant to the Natural Resources Protection Act, Title 38 M.R.S.A., Section 480-C.

10. Vegetation may be removed in excess of the standards in Section 15P of this ordinance in order to conduct shoreline stabilization of an eroding shoreline, provided that a permit is obtained from the Planning Board. Construction equipment must access the shoreline by barge when feasible as determined by the Planning Board.

    a. When necessary, the removal of trees and other vegetation to allow for construction equipment access to the stabilization site via land must be limited to no more than 12 feet in width. When the stabilization project is complete, the construction equipment accessway must be restored.

    b. Revegetation must occur in accordance with Section 15S.

    NOTE: A permit pursuant to the Natural Resource Protection Act is required from the Department of Environmental Protection for shoreline stabilization activities.

11. A deck over a river may be exempted from the shoreland setback requirements if it is part of a downtown revitalization project that is defined in a project plan approved by the legislative body of the municipality, and may include the revitalization of structures formerly used as mills that do not meet the structure setback requirements, if the deck meets the following requirements:

    a. The total deck area attached to the structure does not exceed 700 square feet;

    b. The deck is cantilevered over a segment of a river that is located within the boundaries of the downtown revitalization project;

    c. The deck is attached to or accessory to an allowed commercial use in a structure that was constructed prior to 1971 and is located within the downtown revitalization project;

    d. The construction of the deck complies with all other applicable standards, except the shoreline setback requirements in Section 15B; and

    e. The construction of the deck complies with all other state and federal laws.

D. Campgrounds. Campgrounds shall conform to the minimum requirements imposed under state licensing procedures and the following:

    1. Campgrounds shall contain a minimum of 5,000 square feet of land, not including roads and driveways, for each site. Land supporting wetland vegetation, and land below the normal high-water line of a water body shall not be included in calculating land area per site.

    2. The areas intended for placement of a recreational vehicle, tent or shelter, and utility and service buildings shall be set back a minimum of 100 feet, horizontal distance, from the normal high-water line of a great pond classified GPA or a river flowing to a great pond classified GPA, and 75 feet, horizontal distance, from the normal high-water line of other water bodies, tributary streams, or the upland edge of a wetland.
    [Amended 2-2-2010 by Ord. No. 2009.98]

E. Individual private campsites. Individual, private campsites not associated with campgrounds are allowed, provided the following conditions are met:
[Amended 2-2-2010 by Ord. No. 2009.98]

    1. One campsite per lot existing on the effective date of this ordinance, or 30,000 square feet of lot area within the Shoreland Zone, whichever is less, may be permitted.

MAY 15, 2024
LEGAL OPINION FROM CITY ATTORNEY TO CITY MANAGER REGARDING VIOLATIONS OF DUE PROCESS BY HARBORMASTER AND HARBOR COMMISSION

CONFIDENTIAL
MEMORANDUM

To: City Manager James Bennett

From: City Attorney Harry B. Center, II, Esq.

Date: May 15, 2024

RE: UNE Pier Application/Due Process Issues

BACKGROUND

Starting in 2015, The University of New England (hereinafter "UNE") has researched and undertaken preliminary steps to construct a marine pier/wharf appurtenant to its campus in the City of Biddeford (UNE refers to this as the Girard Marine Science Center Pier-hereinafter "pier"). The pier would be constructed within the City's jurisdiction of the Saco River. Pursuant to City of Biddeford Code of Ordinances (hereinafter "Code") Section 74-35 (a), any new construction of a pier/wharf must be approved by the City of Biddeford Harbormaster. Pursuant to the Charter of the City of Biddeford (hereinafter "Charter"), Article X, Section 7, the position of Harbormaster is created. Code provisions 74-46 through 74-51 set forth the authority, duties, qualifications and compensation of the Biddeford Harbormaster.

Pursuant to the City Charter, Article IV, the City Manager is the chief administrator of the City and has complete administrative authority over all City of Biddeford personnel, including the Harbormaster. That authority includes the power to direct, supervise, discipline all city department heads and officers and to follow and implement laws of the Federal Government, State of Maine and the Charter and Code provisions of the City of Biddeford.

The Harbormaster is a municipal government official, who must follow all Federal and State Constitutional provisions as well as the Charter and Code. A party aggrieved by a decision of the Harbormaster may appeal to the City's Harbor Commission, which is a Municipal body, established pursuant to the Code Section 74-61. Pursuant to Section 74-63, appeals from parties aggrieved by a decision of the Harbor Master are before the Harbor Commission.

ISSUE

In 2015 UNE initially approached the City with a plan/site map prepared by Baker Design Consultants, which set forth nine potential locations for the pier. UNE contends that at a site walk in August 2015 former Harbormaster Marshall Alexander verbally approved or accepted a location known as Site #7 for the pier. This is a disputed issue of fact. In my opinion, notwithstanding the Code provision which provides that the Harbormaster will facilitate and

guide any applicant through the application process (Code 74-35(d)), because UNE has not formally applied for approval of the pier, no formal municipal decision has been made. Due to funding delays and the pandemic and such, UNE never moved forward with a formal request to the Harbormaster seeking approval to construct the pier at Site #7. In the Fall of 2023, UNE contacted the current Harbormaster Paul Laverriere, to move forward on Site #7.

In early 2024 City officials received complaints from representatives of UNE regarding the Harbormaster Paul Laverriere's conduct in his capacity as Harbormaster as it relates to the proposed pier. Note that I do not call this a " pending application for a permit" as UNE has not yet formally submitted an application for the pier. UNE alleges that the City's Harbormaster, Paul Laverriere, has made numerous statements evidencing bias against the UNE- which is a factual dispute. More importantly, UNE alleges that Harbormaster Laverriere has prejudged the potential pier application, and he has publicly stated that he is going to deny or refuse to issue a permit to UNE for a pier at Site #7. This allegation is not subject to dispute.

Chair of the Harbor Commission, John Schafer, sent email correspondence dated February 25, 2024, to the entire Harbor Commission, the Mayor, yourself and the entire City Council with "cc" to a variety of citizens. In that email, Chair Schafer states that a dispute exists between UNE and Biddeford over the design and location of the subject pier. Further that email contained the minutes of a February 21, 2024 Joint Harbor and Shellfish Meeting. The minutes state ***"..., Paul has denied approval of the UNE pier design."*** The correspondence also states that UNE is threatening possible litigation. It is important to note that any "litigation" brought by UNE would be an administrative, appellate review of its Constitutional rights and not any type of litigation seeking money damages from the City. UNE has every right to seek judicial review of any denial of a permit by a governmental entity and should not be penalized or impugned for asserting its Constitutional rights.

Additional complaints by UNE against the Harbormaster are that the Harbormaster has unilaterally and in an ex parte manner advocated to other regulatory bodies to deny the UNE permit for a pier at Site #7. It was entirely improper for the Harbor Commission and its Chair to discuss a potential application for a permit, without notice to the applicant. UNE also alleges that the Harbormaster has contacted the Army Corp of Engineers (which also must approve any final pier plan), indicating that his is or will deny the application and he has urged the ACOE to deny the permit. In my opinion, all of these actions constitute a violation of UNE's due process rights and expose the City to losing any judicial appeal of a denial of a permit for Site #7, irrespective of the potential merits of such denial.

LEGAL CONCLUSIONS & OPINIONS

I have reviewed the City Charter, Code and applicable case law. Based on that research, I have opinions and advice to the City regarding the potential application by UNE for a permit to construct a pier at Site #7.

The public emails which state that the Harbormaster has denied a permit that has not been formally submitted violate the applicant, UNE's due process rights. The due process clauses of the Maine and federal Constitutions guarantee due process before a government entity deprives

any person of a property right. *Kirkpatrick v. City of Bangor*, 1999 ME 73, ¶ 13, 728 A.2d 1268; *see also* U.S. Const. amend. XIV, § 1; Me. Const. art. I, § 6–A. The pier application is a constitutionally protected property right of UNE.

Persons who come before an administrative board are entitled to a fair and unbiased hearing. *Fitanides v. City of Saco*, 2015 ME 32, ¶ 22, 113 A.3d 1088; *Gorham v. Town of Cape Elizabeth*, 625 A.2d 898, 902 (Me. 1993). An administrative hearing officer "enjoys a presumption of honesty and integrity, which is only rebutted by a showing of some substantial countervailing reason to conclude that a decisionmaker is actually biased with respect to factual issues being adjudicated." *Mr. & Mrs. V. v. York Sch. Dist.*, 434 F.Supp.2d 5, 12–13 (D. Me. 2006).

Statements by the Harbormaster that UNE"s application is not "common sense", made outside of any noticed, formal proceeding are in violation of due process. Those statements would likely be found by a reviewing court to constitute bias. The Harbormaster acted unprofessionally when he told the ACOE to deny the UNE permit and by informing the ACOE that he had already denied the permit.

Comments by a municipal official at municipal proceedings without the applicant being notified nor present create a perception of bias, violate due process and raise questions about a municipality's willingness to consider the contentions of its citizens in a fair and responsible way. UNE has the right to protect its property interests, including its appeals to a neutral, unbiased Harbor Commission or Court. *See Fitanides v. City of Saco*, 2004 ME 32, ¶ 36, 843. Further evidence of bias is set forth in the Harbor Commission Chair's email which references UNE's potential threatened litigation. The exercise of appellate rights is absolutely proper and should not be raised at any level of review.

It is my opinion that the City of Biddeford should engage an independent Harbormaster to review and determine the UNE pier application. This insulates the City from the time and cost of a lengthy appeal of what has already been deemed a 'denial' by the current Harbormaster. Such 'denial' has been illicitly approved by the Harbor Commission. I do not believe I would successfully defend either a denial by the Harbormaster or a review by the current Harbor Commission.

Should there be an appeal from the independent Harbormaster's decision, it will need to be presented to a City of Biddeford appellate body, separate and distinct from the current Harbor Commission, for the reasons stated herein.

HARBORMASTER RIGHTS

The current Harbormaster is a governmental employee who has his own Constitutionally protected due process rights in his employment as Harbormaster. It is my opinion that none of those rights are impugned as there is no reduction in pay or benefits, nor is his position in any way diminished. The City Manager is making a decision based on legal advice, to proactively prevent lengthy and very costly appellate review of a pier application that has irrefutably been

the subject of numerous violations of procedural due process. It is my opinion that the current Harbormaster has no right to review the City's decision to have UNE's permit reviewed by an independent Harbormaster.

EXECUTIVE SUMMARY

- There is no factual issue that the City has tainted the pending pier application by UNE, based on the February 25, 2024, Harbor Commission Chair email and the February 21, 2024, Harbor Commission minutes. Evidence of bias, violations of due process and general unfairness are established in the record.

- The decision to have an independent Harbormaster determine the UNE pier permit application is solely within the discretion of the City Manager, based on opinions from the City Solicitor and the Harbormaster has no appellate rights or right to review that decision.

- Should UNE choose to appeal any decision by the independent Harbormaster, a new appellate body should be created as the current Harbor Commission has tainted its ability to independently review any decisions on the UNE pier application.

N:\Shared\HBC-WIP\Biddeford\UNE Marine Pier Issue\MEMORANDUM docx

MEMORANDUM FROM CITY MANAGER TO CITY OFFICIALS EXPLAINING DUE PROCESS VIOLATION ISSUES

City of Biddeford, Maine

The Office of
City Manager
James A. Bennett
Email: jbennett@biddefordmaine.org

MEMORANDUM

TO:	**Honorable Mayor Grohman** **Honorable City Council** **Biddeford Harbor Commission** **University of New England**
FROM:	James A. Bennett, City Manager
DATE:	May 22, 2024
RE:	**Administrative Hearing Authority for Anticipated Girard Marine Science Center Pier**

After an extensive review of information and consultation with the City Attorney, I have informed the Harbormaster that I am removing him as the Administrative Hearing Authority for the anticipated application for the above mentioned project. Included within this memo is the rationale for my decision. I want to make it clear from the onset that I have not found the Harbormaster to have malice or intention in his actions. Further, my decision should not be considered disciplinary in nature.

It is my responsibility to ensure all appointed officials, employees and hired agents of the City perform to the highest of standards. In this matter, the process must protect the constitutional property rights of all, including the applicant. Further the applicants are entitled to a fair and unbiased hearing. Without taking this action, I have concluded that those standards would not be achieved.

The City Code directs the Harbormaster to facilitate and guide any applicant through the application process (Code 74-35(d)). Since the UNE has not formally submitted an actual application, the interactions between the applicant and the Harbormaster is governed by this section of the City Code. On the surface, this does not raise any concerns.

Examination of the actual activities of the Harbormaster once the applicant has indicated a difference of opinion on the preferred site raises the concerns. Examination of known factual information has led me to conclude that his actions were beyond the scope required by City Code 74-35(d). I further have concluded that an independent body would determine that the Harbormaster had moved into his role as the hearing authority prior to an application having been filed.

Without going into the complete analysis, I will share some of the factual information that has influenced my decision. In public settings, the Harbormaster has made it clear he would not consider UNE's preferred choice and would not grant a permit for that site. It is generally accepted that he has been informally in contact with other reviewing agencies advocating for his preferred site. At public meeting(s) he attended, it was reported by municipal officials that the Harbormaster had denied UNE's application. No application had been filed and he did not correct the public record. He has also participated in public discussions with the Harbor Commission (the actual appellant board for any aggrieved applicant before the Harbormaster) regarding the pending application and his rationale for his

decision. He has referred to UNE's 'application' as lacking 'common sense' publicly and outside of any noticed, formal hearing.

Recent Maine court decisions were helpful for my review. Having the public record misrepresent a denial of a permit even before an actual application, is a denial of the applicants due process rights. In *Kirkpatrick vs City of Bangor,* 1999, the court concluded that denying due process rights within both the U.S. and Maine Constitutions is equivalent to denying a property right.

Further, an administrative hearing officer (which the Harbormaster is when considering formal applications) "enjoys a presumption of honesty and integrity, which is only rebutted by showing of some substantial countervailing reason to conclude that a decision maker is actual biased with respect to factual issue being adjudicated" *Mr. & Mrs. V. vs York School District,* 2006. The undisputed facts above, in my opinion, has tarnished the presumption provided by the law.

In addition, I will be advising, with the assistance of the City Attorney, the Harbor Commission of the difficulty in them hearing any potential appeals on this matter. Specifically, comments by municipal officials at a municipal proceedings without the applicant being notified nor present create a perception of bias, violation of due process and raises questions about a municipality's willingness to consider the contentions of its citizens in a fair and responsible way. UNE has the right to protect its property interests, including its appeals to a neutral, unbiased Harbor Commission or Court (*Fitandies vs City of Saco, 2004).* The public discussions at meeting on the merits of the forthcoming application, email communications, and raising the concern of the pending litigation (the excise of an appellate rights is absolutely appropriate and should never be raised as an issue in a review process) has amounted to an illicitly approved denial by the Harbor Commission.

I have also notified the Assistant Harbormaster, by copy of this communication, that he, because of the close working relationship and the admitted role of training him, will not be able to be the administrative hearing officer in this matter.

I will soon announce the appointment of a special 'Harbormaster Pro Tem' for the sole purpose of hearing and deciding on the anticipated application.

CITY MANAGER
LETTER TO HARBORMASTER
GIVING NOTICE OF REMOVAL
FOR UNE PIER REVIEW

City of Biddeford, Maine

The Office of
City Manager
James A. Bennett
Email: james.bennett@biddefordmaine.org

May 22, 2024

Mr. Paul Lariviere, Harbormaster
517 Pool Rd
Biddeford, Maine 04005

RE: Expected University of New England (UNE) New Pier Application

Dear Mr. Lariviere,

It is a reasonable assumption that UNE will formally submit their application for the so-called Girard Marine Science Center pier (SMSC Pier). This application will be submitted to you pursuant to Chapter 74-35(a)-(c) of the City Code.

In your official capacity as the Harbormaster, it is your responsibility to consider the application based on the merits of the submitted information. You must join other government officials in ensuring that constitutional property rights are protected, including those of the applicant. Further, you are entrusted to ensure applicants are entitled to a fair and unbiased hearing. As the City Manager, I am enjoined with the same responsibilities.

The City Code also directs the Harbormaster to facilitate and guide any applicant through the application process (Code 74-35(d)). I am aware that you have been playing this role with this proposed application since at least 1995, if not earlier. First as the Assistant Harbormaster and most recently, as the current Harbormaster.

The record is clear that UNE has a different opinion on the best location for the pier than the location your 'guidance and facilitation' has identified. Their preferred location, as I understand it, is based on the information they have received from technical experts they have hired to assist in siting and permitting the pier through various reviewing agencies.

Based on your public comments, you have been steadfast in your conclusion that the only location that is acceptable is the site that you directed UNE towards. These comments and other actions have raised the issue regarding your ability perform your duties objectively. It's my responsibility to evaluate whether you moved beyond the 'guidance and facilitation' role as contemplated by the Code and have essentially acted as the administrative hearing officer prior to the actual submittal of the application.

You have publicly stated there is no way that you would approve the site they are proposing on more than one occasion. It is generally understood that you have informally been in contract with other reviewing agencies to advocate support of your preferred site. There are public

meetings where it has been reported that you have denied the location that UNE desires; yet no such application has ever been made. You decided to let those comments stand even when lacking factual accuracy. You actively participated in public discussions with the Harbor Commission, the very appellant board to consider any appeals of the Harbormaster's decision, specific to your actions and rationale to date, without any notice to the applicant. Referring to UNE's 'application'[i] as lacking 'common sense' publicly and made outside of any noticed, formal proceeding.

Recent Maine Court decisions are helpful in my evaluation process. Having the public record misrepresent a denial of a permit even before an actual application has been submitted, is a denial of the applicants right to due process. In *Kirkpatrick vs City of Bangor,* 1999, the court concluded that denying the right to due process within both the U.S. and Maine Constitutions is equivalent to denying a property right.

Further, an administrative hearing officer (which you are when considering formal applications) "enjoys a presumption of honesty and integrity, which is only rebutted by showing of some substantial countervailing reason to conclude that a decision maker is actual biased with respect to factual issue being adjudicated" *Mr. & Mrs. V. vs York School District,* 2006. The undisputed facts above, in my opinion, have tarnished the presumption provided by the law.

It is my conclusion that allowing you to be the administrative hearing officer on the anticipated application would be a mistake. In my capacity as the City Manager, bound by the responsibility to ensure the application would be considered objectively, compels me to inform you that I will be removing you from any further action on this pending application. Further, you are directed to make no further comments in this regard, public or private.

I have also notified the Assistant Harbormaster, by copy of this communication, that he, because of the close working relationship and your admitted role of training him, that he will not be able to be the administrative hearing officer in this matter.

Finally, I will be advising, with the assistance of the City Attorney, the Harbor Commission of the difficulty with them hearing any potential appeals on this matter. Specifically, the fact that comments by municipal officials at a municipal proceeding without the applicant being notified nor present create a perception of bias, and that the violation of due process raises questions about a municipality's willingness to consider the contentions of its citizens in a fair and responsible way. UNE has the right to protect its property interests, including its appeals to a neutral, unbiased Harbor Commission or Court (*Fitandies vs City of Saco, 2004).* The public discussions at meetings on the merits of the forthcoming application, email communications, and raising the concern of the pending litigation (the excise of an appellate rights is absolutely appropriate and should never be raised as an issue in a review process) has amounted to an illicitly approved denial by the Harbor Commission.

I should make it clear, that I have not concluded that you have acted with malice nor that you have been intentional in your actions, but simply overstepped your facilitation and guidance role into actions that an independent body would consider inappropriate. Once this immediate issue is concluded, we can revisit my conclusion and decision.

I will soon announce the appointment of a special 'Harbormaster Pro Tem' for the sole purpose of hearing and deciding on the anticipated application.

Respectfully,

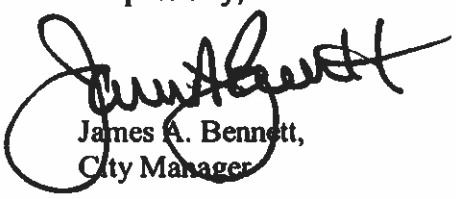

James A. Bennett,
City Manager

[1] Understanding that no formal application has been submitted

HARBORMASTER PRO TEM
TEC ASSOCIATES
REVIEW AND PERMISSION
AND CITY CORRESPONDENCE
GRANTING PERMISSION TO
UNE FOR PIER APPLICATION

TEC ASSOCIATES CONSULTING ENGINEERS

22 July 2024

Mr. James A. Bennett
City Manager
City of Biddeford, Maine
205 Main Street
Biddeford, ME 04005

Re: Agreement for Professional Engineering – UNE Pier Project

Dear Mr. Bennett:

TEC Associates proposes to provide professional engineering services for the above referenced project for a fee of $2,800. Our scope of services for this project includes the following tasks:

1. Review an application by the University of New England to construct a pier on the Saco River in Biddeford and make a determination if the application contains the information required by Section 74-35 (c).

All work shall be in accordance with the attached *Statement of Terms and Conditions* and *Engineering Rate Schedule*. Thank you for asking us to assist you with this project.

Very truly yours,
TEC ASSOCIATES

Wayne Duffett, P.E.
President

Enclosed: Statement of Terms and Conditions
Engineering Rate Schedule

I understand and accept this proposal for the City of Biddeford, Maine.

By: _____ Title: _____
(Authorized Representative)

By: _____ Date: _____
(Print or Type Name)

Please sign and return one copy of this proposal to TEC Associates.

40 Mechanic Street South Portland, Maine 04106
Phone: 207-767-6068

City of Biddeford, Maine

The Office of
City Manager
James A. Bennett
Email: james.bennett@biddefordmaine.org

July 9, 2024

University of New England
11 Hills Beach Road
Biddeford, Maine 04005

Attention: Mr. Alan Thibeault, VP of University Operations

RE: Proposed Marine Science Center Pier

Dear Mr. Thibeault,

I write to you today to update you on the above submittal. I apologize for the delay in proceeding with the application. As the University is very aware, unusual circumstances created challenges in assuring that the application was reviewed in an unbiased process.

On behalf of the City and after consulting with the City Solicitor, I have determined that the role of the Harbormaster consistent with City Code 74-35 is primarily limited to two;

- …to grant permission for the pier; and
- …to determine if subsections (c) 1-10 have been complied with.

Further, it is also my determination that completion of subsection (c) 1-10 is a condition precedent prior to the ability of the Harbormaster granting permission or 'signing off' pursuant to section (d) of the ordinance. The City further may delegate the determination of completeness to a third party independent qualified engineering firm.

Therefore, I have engaged Wayne Duffett, PE of TEC Associates specifically to make the determination if your application meets the criteria found in City Code 74-75 Section (c) 1-10. Your application materials have been provided to Mr. Duffett for his review. Your cooperation during his review is requested.

Please feel free to reach out to me if you have any questions

Sincerely,

James A. Bennett
City Manager

CC: Biddeford Mayor and City Council

City of Biddeford, Maine

The Office of
City Manager
James A. Bennett
Email: james.bennett@biddefordmaine.org

August 19, 2024

University of New England
11 Hills Beach Road
Biddeford, Maine 04005

Attention: Mr. Alan Thibeault, VP of University Operations

RE: Notice to Proceed with External Reviews

Dear Mr. Thibeault,

On August 9, 2024, I received written clarification from Mr. Wayne Duffett, PE of TECAssociates that UNE's proposed Research Pier and Float System has complied with City Code 74-35 subsections (c) 1-10. Those sections are as follows:

(1) A formal boundary survey that has been documented at the Registry of Deeds.
(2) A copy of the boundary survey showing the littoral zone, established by extending property lines seaward.
(3) A location map from a portion of a USGS topographic map or coastal chart.
(4) Distance to navigable channels or any federal navigation project.
(5) Mean high- and low-water boundary.
(6) A plan view on the drawing(s) that shows the location and dimensions of the applicant's structure(s) in relation to the applicant's property lines.
(7) A typical cross section/side view of the applicant's structures on the drawing(s).
(8) Evidence that owners of abutting properties have been notified of the applicant's intended project.
(9) Evidence that the 1) Maine Historic Preservation Commission, 2) Aroostook Band of Micmac, 3) Passamaquoddy Tribe of Indians: Pleasant Point; Indian Township, 4) Houlton Band of Maliseet Indians, and 5) Penobscot Indian Nation have been notified of the applicant's intended project.
(10) Completed applications to the Army Corps of Engineers, Department of Environmental Protection and Biddeford Code Enforcement. A regulatory permit from the Saco River Corridor Commission may also be required in some instances.

Based on this information and in harmony with my earlier communications, please consider this as formal notification from the City of Biddeford that the application has been found in compliance with

the above mention City Code. That finding allows the application to proceed in the next steps of the review process; namely formal review by all agencies except those that are part of the City of Biddeford. After each and all of those processes are complete, the City will move forward with the final review(s) by agents and Committees of the City.

While I don't believe it is necessary, let me empathically state that this communication does not in any form, imply that the City has in any way made a determination that the location submitted has been approved. Said approval will considered after completion of all process and in compliance with applicable laws, regulations. This includes all local ordinances.

Please feel free to reach out to me if you have any questions

Sincerely,

James A. Bennett
City Manager

CC: Biddeford Mayor and City Council

EXAMPLE OF
MOORING PERMIT

Harbor Master

City Of Biddeford
205 Main Street
P.O. Box 586
Biddeford, ME 04005-0586

APPLICATION DUE DATE: MARCH 15TH

Read Carefully Before Signing

MOORING PERMIT APPLICATION

(Please Print Or Type)

Date of Application _____ Permit# _____

USE: Personal Rental Comm. Fish Other _____ Summer Year Round City Tag# _____
(Circle One) (Circle One) (By Harbor Master)

TYPE: Granite Block Cement Block WEIGHT_____ HEAVY CHAIN _____ LIGHT CHAIN/NYLON _____ BOWLINE_____
(Nylon Only; Non-Floating)

BOAT REG./DOC# _____ BOAT NAME _____ MAKE _____ YEAR BUILT _____

OWNER NAME _____ HOME TEL: _____ BUS TEL: _____

MAILING ADDRESS _____ CELL. TEL: _____

PERMANENT ADDRESS _____ TEL: _____

_____ EMAIL _____

(Name, address & telephone number of local person responsible for boat, if non-resident REQUIRED)

BOAT DESCRIPTION: Color_____ Trim_____ Length _____ Draft_____ Propulsion_____

OPEN CABIN CANOPY LOBSTER CRUISER SAIL WORK ROW OTHER_____

SPECIFIC LOCATION OF MOORING AREA REQUESTED _____

DATE PRESENT MOORING PUT DOWN _____ LAST INSPECTED _____ BY WHOM_____

By signing this mooring permit application for the City of Biddeford I hereby expressly give my permission to the Harbor Master, the Assistant Harbor Master or anyone lawfully designated by the Harbor Master to raise, lift, possess, transfer or otherwise handle any lobster traps, buoys, cars, wharfs, weirs, nets or any other sort of fishing gear belonging to me as the licensed owner which appears in any channel to and from any harbor which is designated by the Biddeford City Ordinance as an area in which lobster gear or fishing gear of any type is prohibited or which appears within 100 feet of any mooring in violation of an ordinance for the city of Biddeford. I further give my permission to the Harbor Master, Assistant Harbor Master or the Harbor Master's designated agent permission to remove, transfer and secure any fishing gear of any type or nature which is found in violation of any ordinance of the city of Biddeford. I further agree to pay for any and all costs related to the removal, transfer, transportation and storage of said fishing gear. Permission by me, by signing this permit, is given pursuant of Title 12, M.R.S.A. §6434.
This permit is non-transferable and is for the use of the above named boat only, except on a temporary basis at discretion of Harbor Master. The location is subject to change at any time at discretion of Harbor Master or Deputy as conditions dictate. Holder of permit is responsible to set mooring and make adjustments as required for the safety of adjacent boats. Permit numbers must be painted on mooring float in at least 3" letters of a contrasting color.
If mooring is already in place the Harbor Master/Assistant will go to location with owner to identify and approve or reassign location. If a new mooring, Harbor Master/ Assistant will inspect and oversee placement of mooring.
Any boat on a licensed mooring taking on water and in danger of sinking, the Harbor Master may authorize a private contractor to pump out said boat at the expense of the owner. The owner must pay contractor within 60 days or lose mooring privileges.
Registration form and fee must be received before March 15 and mooring in before June 30 or mooring will be considered abandoned and location reassigned, unless prior arrangements have been made with the Harbor Master.
Application permit fee $10.00 to be applied against the mooring fee.

Signed _____ Date _____

THIS PERMIT APPLICATION APPROVED BY HARBOR MASTER/ASSISTANT _____

REQUEST APPROVED YES ☐ NO ☐ DATE _____ EXPIRATION DATE_____

FEE: ~~$125~~ 150

DATE RECEIVED _____ NEXT INSPECTION DUE DATE_____

BY _____

CHECK/MONEY ORDER #_____ CASH

Whitten, Nan

From: Fishing Woes <fishingwoes@gmail.com>
Sent: Monday, July 28, 2025 12:12 PM
To: attorney.general@maine.gov
Subject: UNE's desired pier location unavailable

Caution: This is an external email. Please take care when clicking links or opening attachments. When in doubt, contact the IT Department

---------- Forwarded message ---------
From: **Fishing Woes** <fishingwoes@gmail.com>
Date: Mon, Jul 28, 2025 at 12:06 PM
Subject: UNE's desired pier location unavailable
To: <jherbert1@une.edu>
Cc: <wmtw@wmtw.com>, <tvmail@wgme.com>, <desk@newscentermaine.com>, <srichelieu@metln.org>, <dinamendros@gmail.com>, <newsdesk@sacobaynews.com>

Mr. Herbert:

On May 27, 2025, you sent a broadcast email to the community asking that we contact you “with any questions” about UNE’s pier application. The mooring owners wrote to you in early July with one question. Consistent with how UNE treats this community, you did not reply.

Mooring owners have been told by city officials that there are no plans to relocate any moorings. Mooring owners informed UNE several times that they are not moving. That remains true. The place on the Saco River that you want for your new pier remains unavailable to you.

Alan Thibeault recently told a reporter that Biddeford now needs to “work with mooring owners to relocate the two impacted moorings.”

That won’t be happening. And so therefore the president of UNE is asked once again. When, against whom, and on what legal basis will you be filing litigation to bulldoze mooring owners out of the way?

Whitten, Nan

From: Hills Beach John <hillsbeachjohn@yahoo.com>
Sent: Thursday, July 24, 2025 9:47 AM
To: Grohman, Martin
Cc: Randy Seaver; srichelieu@metln.org; Dina Mendros; newsdesk@sacobaynews.com
Subject: UNE pier: two final questions

Caution: This is an external email. Please take care when clicking links or opening attachments. When in doubt, contact the IT Department

Good morning, Mayor Grohman.

As you know, I resigned from the harbor commission just over a year ago, seeking more transparency in the regulatory review of UNE's proposed pier for the Saco River. At one point you invited me to your office to discuss the matter, along with the city attorney. Thank you for that opportunity.

The planning board will soon vote to grant final approval to UNE's application. The result of that impending decision is that *no* professional, who knows the river and works for the city, ever approved this application after personally getting onto the river to evaluate current, river depth, wind, extreme storms, tides, other moorings, and so forth. (Nor did any state or federal regulator.) That was a gaping hole in the Biddeford's regulatory process. You are probably aware that UNE neighbors and those who use the river, both in Biddeford and Saco, are now bitter and angry about the flawed regulatory process that *actively excluded* local knowledge of the river. They are especially upset about the former city manager's role in facilitating events that gifted UNE the upper hand. It's hard to believe that's the way things were allowed to happen, right to the very end. As you prophesied in the Saco Bay News a year ago, "At this point they (UNE) are holding all the cards."

I read in the Biddeford Gazette that you are running for re-election. Congratulations. Coincidentally, your first mayoral term ran almost concurrently with the UNE controversy from start to finish. A few days ago, in anticipation of final success before the planning board, Alan Thibeault told the Saco Bay News, "…the city will then need to work with mooring owners to relocate the two impacted moorings." I am winding down my personal involvement in this issue, but before I (eagerly) retire as a community organizer, I have two questions to ask on behalf of my friends and neighbors.

As Biddeford's top government leader, you have been privy to policy and strategy discussions during the last two years. As I understand the current situation the mayor has no power, we don't have a city manager, the former city manager obliterated the relevance of the harbormaster, the assistant harbormaster, and the harbor commission, and the mooring owners have made it clear that they're not going to move. UNE holds all the cards and wants to start construction this fall. Can you tell me (and the voters) what person now working for the city will boot the mooring owners from the spots on the river that they have lawfully held for many years? The second question is, what city authority will direct the city's agent to take that action, and give those mooring locations to UNE?

Thank you very much. I ask these two questions not only as the former chair of the now crippled and dormant harbor commission, but as a voter who proudly displayed a “Grohman For Mayor” sign on my lawn in the Fall of 2023. I look forward to your reply.

Sincerely,

John Schafer
Hills Beach, Biddeford, Maine

Whitten, Nan

From:	Hills Beach John <hillsbeachjohn@yahoo.com>
Sent:	Wednesday, July 23, 2025 9:17 AM
To:	Lewis, Kayla; Angers, Roch; Beaudette, Stephen; susan.deschambault@biddefordmaine.org; Patoine, Larry; Plotkin, Alexa; Dubois, Matthew; Galbraith, David
Cc:	Whitten, Nan; Randy Seaver; srichelieu@metln.org; Dina Mendros; newsdesk@sacobaynews.com
Subject:	UNE pier: final submitted comments

Caution: This is an external email. Please take care when clicking links or opening attachments. When in doubt, contact the IT Department

Dear Biddeford Planning Board:

I have written and sent this email to you on Wednesday, July 23, 2025. As of this morning, no future Planning Board meeting is scheduled on the city's website. Encouraged by Mr. Galbraith's articulation of his department's complete transparency at the last Planning Board meeting, I would like to respectfully make a request.

At the future Planning Board meeting during which UNE will seek final approval for its new pier, could Mr. Galbraith, the Chair, or a Member of the Board please read my remarks into the record, so that those watching at home can know that the Board is fully aware of this information before it votes. Thank you very much for the consideration. My testimony:

Preparation of litigation against the City of Biddeford, to be filed after the Planning Board grants final approval to the University of New England (UNE) for a new marine sciences research pier, is easily based on an undisputed set of facts.

It is the duty of each Member to fully review all information and testimony supplied to the Board. Therefore, all three Members of the Planning Board who voted to grant preliminary approval to UNE's application were aware of these facts on July 16, because they were available in emails and documents contained in the packets of information that were supplied to the Board, and in public testimony given to the Board.

On July 16, 2025, the three Members who voted in the affirmative knew each of the following to be true.

1. Mr. Patoine requested a copy of the application that UNE filed with NIST, and UNE refused to provide it.
2. Daryen Granata, Vice President & Training Coordinator for the Maine Harbor Masters Association, wrote to the city manager on June 4, 2024, "Section 74-35b of the Biddeford Harbor Ordinance states, 'permission for the construction of any new

wharf or pier within the jurisdictional limits of the City shall not be granted without approval of the Harbormaster.'"

3. In the same email, Mr. Granata wrote, "We recommend that you work within the review hierarchy laid out in your harbor ordinance."
4. In the same email Mr. Granata laid out the normal "chain of command" for municipal regulatory review of UNE's application: harbormaster, or assistant harbormaster, or finally, the harbor commission. None of these regulatory entities reviewed or approved UNE's application.
5. In the same email, Mr. Granata described the city manager's plan to circumvent normal regulatory review as "inconsistent with the prevailing law."
6. On July of 2025, Mr. Granata confirmed in writing that, "The Maine Harbor Masters Association has no record of Mr. Wayne Duffett attending Basic Harbor Master Training and Certification." In other words, the vendor that Jim Bennett hired while trying to circumvent Biddeford's municipal regulatory process, as outlined in Section 74-35b of the Biddeford Harbor Ordinance, is not a certified harbormaster in the State of Maine.
7. On June 11, 2025, Alan Thibeault of UNE confirmed in a letter to the city planner, "The Ordinance begins with Section 74-35(a), which states: "No additions, alterations, new construction or/or changes to an existing wharf, pier or landing shall be made without prior permission of the Harbormaster."
8. In the same memo, Mr. Thibeault cited language from Section 74-35(d) and wrote "…the Harbormaster shall…sign off that all regulatory approvals have been obtained for construction." Wayne Duffett is not a harbormaster in Biddeford, or anywhere. Paul Lariviere remains Biddeford's harbormaster. Mr. Lariviere has not "signed off" on any such document.
9. On June 25, 2024, Heather Stukas of the U.S. Army Corps of Engineers instructed her colleagues to "follow-up" to make sure the latest UNE location and design was acceptable to Biddeford's harbormaster, and that never happened.
10. In its application UNE argued strenuously that pier location was previously approved by virtue of a previous Board's approval of a Master Plan. UNE's argument was specious. Everyone knows approval of a conceptual Master Plan is not Planning Board approval of a specific application.
11. There can be no doubt about the previous fact. That's why the city manager wrote to UNE on August 19, 2024, "While I don't believe it is necessary, let me emphatically state that this communication does not in any form, imply that the City has in any way made a determination that the location submitted has been approved."
12. Finally, the three Board members voting to approve the application on July 16, 2025 knew that Biddeford's delegate to the Saco River Corridor Commission abstained from all discussion and voting on the application, leaving Biddeford residents completely unrepresented. The DEP Commissioner refused a request for a public hearing. No certified harbormaster reviewed or approved the application. UNE made sure the public was not invited to the site survey it conducted for the Bureau of Submerged Lands. Perhaps most maddening of all, the U.S. Army Corps of Engineers notified Biddeford residents that voluminous testimony and documentation that had been submitted to that agency was summarily discarded.

The items listed above are a set of facts, not opinions. Included in that set of facts is the conclusion by the Maine Harbor Masters Association that Biddeford's intentional deviation from its harbor ordinance was "inconsistent with the prevailing law." To use language that is more direct, it was illegal.

The Planning Board was specifically warned not to ***deny*** the application based on currents, tides, water depth, and so forth. That is understood and not in dispute. But the Planning Board also knows that no independent professional has looked at these things, either. Therefore, we all know when the Board grants final approval tonight, ***nobody*** who knows the river will have considered those critical factors. Through no fault of its own, the only information the Planning Board had was submitted by UNE's paid engineers, sitting behind computers.

The Code of Ethics guides the Board to "explicitly evaluate all facts, alternatives, means, and consequences relevant to its decisions." One of those facts is that the Planning Board ***knows*** that no professional who knows the river, working for the city, has ever approved this application ***after*** evaluating current, river depth, tides, other moorings, and so forth. Nor has any state or federal regulator. That is a gaping hole in the regulatory process. Any proof of such a critical examination of those physical realities, by a certified and experienced ***independent*** authority, is missing from the application. The Board is aware of this.

Nevertheless, the vote tonight won't be to table the application until that gaping hole is filled. It will be --- knowing what the Board knows --- to approve the application. That needs to be made clear to all parties concerned, especially the people of Biddeford. I appreciate you introducing this set of facts into the public record.

In conclusion, I thank each Planning Board Member for your public service, and I also thank all Saco & Biddeford residents who have been relaying their concerns to me since the beginning of 2024. Those who actually know the river have a lot of practical wisdom.

Respectfully,

John Schafer
Hills Beach, Biddeford

Whitten, Nan

From: Public Affairs <publicaffairsinfo@gmail.com>
Sent: Tuesday, July 15, 2025 9:36 AM
To: randyseaver01@gmail.com; wmtw@wmtw.com; desk@newscentermaine.com; tvmail@wgme.com
Subject: River mariners challenge UNE president to reveal pier lawsuit

Caution: This is an external email. Please take care when clicking links or opening attachments. When in doubt, contact the IT Department

River mariners challenge UNE president to reveal pier lawsuit

July 15, 2025

MEDIA CONTACT, MOORING OWNERS:

1. Capt. Shawn Tibbetts, captshawntibbets@gmail.com, 207-502-0368
2. Michael Ramunno, mramunno@maine.rr.com, 207-423-3650

(Biddeford, Maine) Because the spot on the Saco River that the University of New England (UNE) wants for a new pier is unavailable, to seize it the university will have to file a lawsuit to expel current mooring holders. Those who own the moorings want university president James Herbert to be transparent about the issue at a planning board meeting tomorrow night.

“We’re not moving, and we are certain the city will take no action to forcibly remove us from the moorings we’ve held for many years, in good standing and in good faith,” said Shawn Tibbetts, a commercial fisherman who owns a mooring on the river. “UNE has to stop tap dancing around this issue, and address it head on in front of the planning board.”

UNE wants to build a new marine sciences research pier on the lower Saco River, near where the river empties into the Atlantic Ocean. With the help of U.S. Senator Collins, UNE secured a $3.5 million grant from the National Institute of Standards and Technology (NIST), to help with construction. But the local mooring holders already occupy UNE’s preferred location, and have for years.

Herbert wrote a broadcast email to the coastal community on May 27 and promised to answer “any question” about UNE’s pier proposal. The mooring holders wrote to Herbert about ten days ago and asked, “when, against whom, and on what legal basis will you be filing litigation to bulldoze mooring owners out of the way?”

Biddeford’s harbormaster says he has no plans to move any current moorings. That’s why Tibbetts and his fellow mooring holders are adamant that UNE can’t have the location they want. If the university fails to detail a plan to forcibly remove moorings, then UNE’s planning board application is incomplete. Tibbetts said an incomplete application is likely to be denied, and UNE can’t dodge the issue any longer.

“It is improper procedure to expect the planning board to approve an application in a location that is off limits. UNE has no power to assign, remove, replace or commandeer moorings, and Mr. Herbert has been aware of this issue since May 14th. The university’s had more than eight weeks to come up with a plan, and they haven’t done it. They have to answer the question --- who are they going to sue?”

The Biddeford Planning Board meets tomorrow, Wednesday, July 16, at Biddeford City Hall. The meeting begins at 6:00 p.m.

###

Whitten, Nan

From: Hills Beach John <hillsbeachjohn@yahoo.com>
Sent: Friday, July 25, 2025 9:31 AM
To: Randy Seaver; srichelieu@metln.org; Dina Mendros; newsdesk@sacobaynews.com; cfox@metln.org
Subject: Fw: A message to Ms. Plotkin & the Board

Caution: This is an external email. Please take care when clicking links or opening attachments. When in doubt, contact the IT Department

I would like to thank our local reporters who worked so diligently to report on this story for the last year and a half. My final effort, to the Biddeford Planning Board this morning, is copied below.

Regards,

John Schafer
Hills Beach, Biddeford, Maine

----- Forwarded Message -----
From: Hills Beach John <hillsbeachjohn@yahoo.com>
To: alexa.plotkin@biddefordmaine.org <alexa.plotkin@biddefordmaine.org>
Cc: stephen.beaudette@biddefordmaine.org <stephen.beaudette@biddefordmaine.org>; roch.angers@biddefordmaine.org <roch.angers@biddefordmaine.org>; susan.deschambault@biddefordmaine.org <susan.deschambault@gmail.com>; kayla.lewis@biddefordmaine.org <kayla.lewis@biddefordmaine.org>; larry.patoine@biddefordmaine.org <larry.patoine@biddefordmaine.org>; matthew.dubois@biddefordmaine.org <matthew.dubois@biddefordmaine.org>
Sent: Friday, July 25, 2025 at 09:17:42 AM EDT
Subject: A message to Ms. Plotkin & the Board

Good morning, Alexa.

With this message, I conclude my personal involvement trying to bring sunlight and open discussion to the UNE pier issue.

I want to apologize to you personally for losing my cool at the July 16 planning board meeting. I'm sure you could see that something got under my skin, but…no excuse. I put you in a tough spot, and I didn't mean for that to happen. Further, I cost myself the opportunity to support the astute observations of Members Angers and Lewis about the fundamental flaws in this particular regulatory review process. I apologize to both of them as well for being of little help on that particular evening.

At the end of my three minutes at the podium I had intended to make what I felt were some important and honest comments. Although I sharply disagree with the logic articulated that evening in favor of the application's approval, I would like to deliver my comments to you now. They still hold true. And they apply to the ***entire*** planning board, and certainly to you as Chair.

Your process was the most democratic thing I've seen in a long, time. That's democratic with a small "d." Right at the start we heard about your Code of Ethics. Everything was transparent, and

participation by local folks was amazing. Everyone who wanted to do so was allowed to supply information, and felt very welcomed to approach the podium. All planning board members were paying attention, and I strongly believe all members researched and deliberated with integrity.

In the democratic process with a small “d,” everyone gets to say their piece and then a decision is made. Although your decision did not go the way I had hoped, I certainly respect it. Because what you folks put together was an inclusive ***model exercise*** in local democracy. You were the ***only*** regulatory agency to welcome and seriously consider citizen input, and that is to your credit.

I wish you and each planning board member the best, and I hope you all enjoy what remains of this fabulous summer weather.

Sincerely,

John Schafer
Hills Beach, Biddeford, Maine

Whitten, Nan

From: Hills Beach John <hillsbeachjohn@yahoo.com>
Sent: Wednesday, July 30, 2025 10:02 AM
To: Grohman, Martin
Cc: Randy Seaver; tvmail@wgme.com; wmtw@wmtw.com; desk@newscentermaine.com; newsdesk@sacobaynews.com; sean.a.murphy@charter.com; josh@themainemonitor.org; kate@themainemonitor.org; micaela@themainemonitor.org
Subject: Official request for "credible news" about UNE pier

Caution: This is an external email. Please take care when clicking links or opening attachments. When in doubt, contact the IT Department

Dear Mayor Grohman,

This is Day 7, and no answers. I'm astonished that your choice, as a declared candidate for office, was to just ignore the two questions I posed to you a week ago.

On May 5, 2025, the Biddeford Gazette published an article, "Mayor defends city review of UNE pier proposal." That review purposefully excluded the professional knowledge of local experts who know the river, and you aren't on the record anywhere as having argued that local knowledge of the Saco River should have been considered. You and your Administration successfully pulled the right levers leading to final approval for the pier, and I've got to tip my hat to you. You outmaneuvered local opposition to UNE's preferred location, and we were no match for you.

Of course, the only thing you can't do now is run away from your success. On behalf of the community members to whom I report, I repeat two questions to the man who wants to be re-elected to Biddeford's top leadership position.

1. What person now working for the city will boot the mooring owners from the spots on the river that they have lawfully held for many years?
2. What city authority will direct the city's agent to take that action, and hand over those mooring locations to UNE?

This is not some theoretical exercise. These are two legitimate and pressing questions that need to be answered now, because Alan Thibeault told the Saco Bay News that UNE wants to begin construction this fall. Your job is to sweep those mooring owners out of the way, and soon.

Hard to believe, but at the symposium on local news last night at McArthur Library you said, "I'm constantly looking for credible news. With so many different things online, it can be difficult to find credible news." This is your opportunity to relay credible news to your constituents. You have been asked two questions, and I look forward to passing on your answers to those who want to stay informed.

Sincerely,

John Schafer
Hills Beach, Biddeford, Maine

P.S. I have made sure to copy The Maine Monitor and the Saco Bay News to this email.

Whitten, Nan

From: Angers, Roch
Sent: Tuesday, August 5, 2025 7:51 PM
To: Planning Board; Center, Harry; Galbraith, David; Whitten, Nan; Iriqat, Adi; Grohman, Martin; LaFountain, Liam; Lessard, Marc; Ortiz, Doris; Emhiser, William; Whiting, Scott; Beaupre, Rogerp; Doughty, Dylan; Gross, Neva; Belanger, Norman; Phinney, Brian
Cc: angersroch@gmail.com
Subject: My statement at the council meeting on Tuesday night

Good Evening: My name is Roch Angers and I live at 26 Cathedral Oaks Drive in Biddeford.

Some of you may know me but others may not. I was a former city councilor & volunteered & appointed to the Planning Board by this present Mayor and this council. My term expires in 17 months. I want to make sure that you know that I am not representing the planning board but giving you my own opinion and only my opinion.

I would like to bring something up about the Pier project at UNE. This project I believe has some real hard questions to be answered and I believe it is tainted. UNE as far as I am concerned has not been transparent with the public and the mooring owners and have not been given the time of day during this whole process.

Why was UNE so quiet in its presentation to the Army Corp of engineering? Nobody got notified and found out later that no public comment was to be allowed. Why were they not up front about the DEP presentation and letting people know they were going to present their plans about the Pier? Saco River Corridor had their meeting and lo and behold the members from the City of Biddeford and the alternate were not present to vote on this matter. Something fishy!!!! Don't you think?

The Coce of ordinances States in Chapet 74 Waterways Article 2 Harbor Division 2. Harbor-master Section 74-51 Criteria.

The Criteria for the Harbormaster is as follows

1. **Must be a voting resident of five years**
2. **Must have at least five years of marine experience with a minimum of two years on the ocean**
3. **Must attend annual Maine Harbormasters Association training seminar.**

The Harbormaster in the city website is Mr. Lariviere. He was removed by the City manager on the pier Issue as he was told that he was biased on the UNE project and that someone else would make the decision in his place.

Well lo and behold the City manager at the time appointed a railroad engineer in his place to become the facilitator of this project. This person does not met the criteria of the code of Ordinance for the city of Biddeford Chapter 74 Article 2, Harbor Division 2 Harbormaster Waterways or State of Maine MRS Title 38 Chapter 10 operations of Vessels of the State of Maine. I was told by our City Solicitor Harry Center that the railroad engineer was not a voting resident of five years, and he did not have five years of Marine experience with a minimum of two years on the ocean and never attended Annual Maine Harbormaster

Association training seminar. I was told this 2 weeks ago at the planning Board meetings and documented in the minutes of the meeting. These are the Biddeford codes of ordinances & Maine State Title 38 Subsection 2 that you as council members must follow and the planning board should follow also. These statutes from Maine and the ordinances are not written on a whim!! They were written for a purpose to follow the law. We are supposed to follow those LAWS.

Tomorrow night at the planning board meting I am going to try to table this vote on the UNE Pier. My reasoning is this as I think that the council should be making this decision as a whole as you are the representative of the cit and you are the ones who makes policy decisions and make sure laws are abided to. I am not trying to tell you what to do but asking that if and maybe if this passes at the Planning Board that you take a hard look at this Pier project and ask yourself if everything is on the up and up. I cannot understand why you as council members were never informed about this project. It should have started with you as a council and not just the Mayor. Thank you for letting me speak in front of you tonight with my concerns. Speaking as a taxpayer of the City of Biddeford.

Thanks for your time

Roch A Angers

Get Outlook for iOS

Whitten, Nan

From: matthew1@maine.rr.com
Sent: Tuesday, August 5, 2025 3:26 PM
To: Whitten, Nan; Plotkin, Alexa
Subject: UNE comments
Attachments: COB final.docx

Caution: This is an external email. Please take care when clicking links or opening attachments. When in doubt, contact the IT Department

I am submitting the following for the 8/6 planning board meeting regarding the UNE project.

I have spoken regarding the UNE project 3 times and have yet to receive a single answer to any of my questions. I am again requesting the Board, who are the final decision makers to answer these questions related to Biddeford's Shore land zoning ordinance:

Section 1. Purposes. [Ord. of 9-15-1998(4)]

The purposes of this ordinance are to:

to protect fish spawning grounds, aquatic life, bird and other wildlife habitat;

to protect commercial fishing and maritime industries; This project does not help me as a Maine guide or any of the working fisher people. It will negatively impact us.

to conserve shore cover, and visual as well as actual points of access to inland and coastal waters; to conserve natural beauty and open space; We all use this area to access the river, the beach and the fish. **How does this project conserve natural beauty and open space?**

SZO sec 15 part C The facility shall be no larger in dimension than necessary to carry on the activity and be consistent with the surrounding character and uses of the area

The site walk was helpful to appreciate the size and scale of this project. Speaking of scale, this site walk confirmed that the numerous regulatory requirements make this so massive it is no longer meet Sec 15c. **What is the next largest privately owned dock comparable in size that supports this requirement under the ordnance? ON what basis does the UNE project meet this standard?**

Sec 15 sec 10a When necessary, the removal of trees and other vegetation to allow for construction equipment access to the stabilization site via land must be limited to no more than 12 feet in width. When the stabilization project is complete, the construction equipment accessway must be restored.

The entrance will be a 20' road (not `12 per the law), combined with the turn around and the building as a backdrop will rip open the vegetation to a massive scale. Fire department requirements conflict with an ordinance, the ordinance-the law- still stands. **How is the project in compliance with this requirement? How is the city reconciling the SRCC approval of a 16' road, vs the 20' road being proposed?**