City of Biddeford
Planning Board
March 03, 2021 6:00 PM Zoom: Mar 3, 2021 06:00 PM Eastern Time (US and Canada)
Topic: Planning Board

Please click the link below to join the webinar:
https://biddeford.zoom.us/j/93676084038?pwd=aHFqckJXOXNWWGF3TStUUmJ2aG54UT09
Passcode: 268055
Or iPhone one-tap :
US: +13017158592,,93676084038#,,,,*268055# or +13126266799,,93676084038#,,,,*268055#
Or Telephone:
Dial(for higher quality, dial a number based on your current location):
US: +1 301 715 8592 or +1 312 626 6799 or +1 646 558 8656 or +1 253 215 8782 or +1 346 248 7799 or +1 669 900 9128
Webinar ID: 936 7608 4038
Passcode: 268055
International numbers available: https://biddeford.zoom.us/u/a5L5EAcWW

1. **DECLARATION OF QUORUM/VOTING MEMBERS**
2. **ADJUSTMENTS TO THE AGENDA**
3. **PLANNER'S BUSINESS**
4. **CONSENT AGENDA**
   - 4.A. Approval of Minutes from Planning Board of February 17, 2021
     021721.pdf
5. **UNFINISHED BUSINESS**
6. **NEW BUSINESS**
   - 6.A. 2020.42 Conditional Use Permit to reoccupy space as a place of worship for Biddeford Christian Ministries at 12 St. Mary's Street (Tax Map 38, Lot 28) in the MSRD 2 Zone.
     2020.42 Biddeford Christian Minintries PB Report 030321.pdf
     Biddeford Christain Ministries Standard Application.pdf
     2020.42 Biddeford Christian Ministries FOF Draft 030321.pdf
   - 6.B. 2021.02 Conditional Use Permit for Retail Medical Marijuana (Caregiver Storefront) for Blossom Retail, LLC at 45 Boulder Way (Tax Map 2, Lot 56) in the I-3 Zone.
     2021.02 Blossom CUP PB Report 030321.pdf
     Blossom Application Materials 1.pdf
     Blossom Application Materials 2.pdf
     2020.02 Blossom FOF Draft 030321.pdf
   - 6.C. 2021.04 Site Plan/Subdivision Concept Plan Review- Tom Watson & Co., LLC for the redevelopment at 1 Gooch Street & 59 Elm Street (Tax Map 40, Lot 56) in the MSRD 3 & General District Shoreland Overlay Zone.

2021.04 Gooch St Sketch Plan PB Report 030321.pdf
0. Title Cover TOC App.pdf
1 Gooch Street Architectural Plan Set.pdf
1 Gooch Street Civil Plan Set 2-3-21.pdf
1. Right Title Interest.pdf
2. Declaration of Easements, Covenants, and Restrictions.pdf
3. Financial & Technical Capacity.pdf
4. Stormwater Management Report.pdf
5. Erosion & Sedimentation Control Report.pdf
6. Traffic Overview.pdf
7. Utilities.pdf
8. Public Safety Letter of Approval Requests.pdf
9. Lighting.pdf
10. Solid Waste.pdf
11. Photographs.pdf
12. Vicinity Map.pdf

6.D. 2021.12 Discussion/Schedule Public Hearing LDR Attachment A. Fees and Charges Proposed Amendments.
2021.12 LDR A Fees and Charges Amendment 2021 Draft 030321.pdf
2021.12 LDR A Fees and Charges Amendment PB Report 030321.pdf

7. OTHER BUSINESS

7.A. Planning Board Discussion of Schedule through June 30, 2021.

8. ADJOURN

The Board reserves the right to halt official business at 9:30 p.m. Items not heard at tonight's meeting shall be rescheduled to the next meeting of the Board. All materials pertaining to items on the agenda are available for public review at the Biddeford Planning Department, second floor, Biddeford City Hall during normal business hours.

City of Biddeford
Planning Board
February 17, 2021 6:00 PM Zoom: Feb 17, 2021 06:00 PM Eastern Time (US and Canada)
Topic: Planning Board

Please click the link below to join the webinar:
https://biddeford.zoom.us/j/96107808866?pwd=c2lqVGdvNGVYWDJvNG9MclZhUUVmUT09
Passcode: 735458
Or iPhone one-tap :
US: +13126266799,,96107808866#,,,,*735458# or +16465588656,,96107808866#,,,,*735458#
Or Telephone:
Dial(for higher quality, dial a number based on your current location):
US: +1 312 626 6799 or +1 646 558 8656 or +1 301 715 8592 or +1 346 248 7799 or +1 669 900 9128 or +1 253 215 8782
Webinar ID: 961 0780 8866
Passcode: 735458
International numbers available: https://biddeford.zoom.us/u/adoGg3TqBM

1. **DECLARATION OF QUORUM/VOTING MEMBERS**
2. **ADJUSTMENTS TO THE AGENDA**
3. **PLANNER'S BUSINESS**
4. **CONSENT AGENDA**
   4.A. Approval of Minutes from Planning Board of February 3, 2021
   PB Minutes 2321-DRAFT.pdf
5. **UNFINISHED BUSINESS**
   5.A. 2020.41 Resubmittal from Planning Board of January 20, 2021. Shoreland Zoning Determination of Greatest Practical Extent for Linda Nash and Steve Rosenfield at 1 Sea Spray Drive (Tax Map 67, Lot 26-1) in the Coastal Residential and Limited Residential (Shoreland Zone)
   Biddeford- Rosenfield-Nash PB amendment submittal 2-5-2021.pdf
   Review Letter No.2 - RosenfieldNash- 1 Sea Spray.pdf
6. **NEW BUSINESS**
7. **OTHER BUSINESS**
8. **ADJOURN**

The Board reserves the right to halt official business at 9:30 p.m. Items not heard at tonight's meeting shall be rescheduled to the next meeting of the Board. All materials pertaining to items on the agenda are available for public review at the Biddeford Planning Department, second floor, Biddeford City Hall during normal business hours.

PLANNING BOARD REPORT

February 23, 2021

Biddeford Planning Board
Greg Tansley, City Planner
City of Biddeford
205 Main Street
Biddeford, Maine 04005

Application: Place of Worship Use – Biddeford Christin Ministries
12 St Mary's Street (Tax Map 38 Lot 28)
Conditional Use Permit Review
Review Status: New application

Planning Board members and Mr. Tansley,

The following application information has been provided for review:

1. Application form dated 12/16/2020
2. Cover letter with pictures regarding certificate of occupancy, prepared by Caleb Johnson Studio, dated 12/14/2020.

With review of the above information and the City's Land Development Regulations, I offer the following comments on compliance with the Town's ordinances.

PROJECT DESCRIPTION

The applicant proposes to reoccupy the former St. Mary's Church at 12 St. Mary's Street in the City's MSRD-2 zone. The site includes a 9,000 ± sf building with associated parking. No new site improvements proposed. The application received approval from the Staff Review Committee for a Conditional Use Permit (Chinese Christian Church) in 2017, however, no work was completed, and the permit expired.

COMPLIANCE WITH THE CITY'S ORDINANCES

The Staff Review Committee reviewed and approved this proposal in 2017 as a minor development review under Article XI. There does not appear to be any changes to the proposal since then. The applicant has stated that the State Fire Marshal's office has inspected the building this past fall and have identified issues to be addressed. The Planning Board, per Sec. 4.C.1 Article XI Site Plan Review, may conduct minor development review if recommended by the City Planner or Staff Review Committee.

WAIVER REQUESTS

None requested.

CONCLUSION

The submitted application for Conditional Use Permit to allow the reoccupation of the former St. Mary's Church does not appear to have changed since the Staff Review Committee approved it in 2017.

SUGGESTED MOTION

Motion to approve with conditions the Conditional Use Permit for the Biddeford Christian Ministries at Tax Map 38, Lot 28 and approve the findings of fact based on the information provided.

Suggested conditions of approval:

1. Prior to issuance of any occupancy permits:
   a. Any roof drains connected to the sewer system shall be disconnected.
2. Prior to the issuance of any sign permits any signage must be approved by the Historic Preservation Commission.
3. The applicant shall obtain all other pertinent local, state and federal permits, licenses, and insurance such as blasting, building, electrical, plumbing, etc prior to commencing business, unless authority issuing said permit allows for such actions.
4. Standard Conditions of Approval apply.

Feel free to contact me with questions.

Best regards,

Christopher Di Matteo
Contract Planner for the City of Biddeford
cdimatteo@longmeadowpla.com
207.604.4245

CITY OF BIDDEFORD, MAINE
PLANNING BOARD

P.O. Box 586, 205 Main Street Biddeford, Maine 04005
207-284-9115

APPLICATION FORM

Type of Application:

☐ Shoreland Zoning Permit ☐ Site Plan Review ☐ Extraction
☒ Conditional Use Permit ☐ Subdivision ☐ Private Way
☐ Other: _____

Applicant Information:

Applicant's Name: Biddeford Christain Ministries c/o Gerry Lachance
Applicant's Mailing Address: 115 Salt Rock Road, Baltic CT 06330
Applicant's Telephone: 860-235-6203
What is Applicant's legal interest in the property?
☒ Owner ☐ Potential Buyer with Contract ☐ Lease/Rental Agreement

Owner's Name: Biddeford Christain Ministries c/o Gerry Lachance
Owner's Address: 115 Salt Rock Road, Baltic CT 06330
Owner's Telephone: 860-235-6203

Agent's Name: Caleb Johnson Studio c/o Patrick Boothe (Architect)
Agent's Address: 110 Exchange Street, 2nd Floor, Portland ME 04101
Telephone: 207-283-8777 or 740-418-5475

Engineer/Surveyor: NA
Engineer/Surveyor's Address: _____
Telephone: _____

Project Location and Lot Information:

Street Address: 12 St Marys Street
Tax Map: 38 Lot: 28
Current Zoning: MSRD2 Shoreland Zoning: _____

Size of lot: 0.82 [X] acres [ ] s.f. Lot Frontage: 123' +/-

Existing Use of Property: Place of Worship

Property currently serviced by:

- [X] City Road
- [X] Public Sewer
- [X] Public Water
- [X] Public Trash
- [ ] Private Road
- [ ] Septic System
- [ ] Private Well
- [ ] Private Hauler

Slope Conditions in Area of Construction (if applicable): NA

[ ] Flat (0-3 % slope) [ ] Rolling (3-8% slope) [ ] Hilly (8-15% slope) [ ] Steep (15% + slope)

Are there any wetlands or waterbodies on the site? [ ] Yes [X] No If yes, attach information

Do you plan to bring fill onto the lot? [ ] Yes [X] No If yes, attach information

Description of proposed use of property:

Project/Proposed Use Description:

The former space was used as a church as part of the Roman Catholic Diocese of Portland. It was built in 1922 and closed in 2009. It sat vacant for a number of years until it was purchased by the Fouzhou Zhong Zhou Christian Church (Biddeford Christain Ministries) in 2016. A conditional use permit was obtained in 2017 but no work was performed on the space. The intention is to re-occupy the space as a place of worship and this is a re-application.

Property to be serviced by:

- [ ] City Road
- [ ] Public Sewer
- [ ] Public Water
- [ ] Public Trash
- [ ] Private Road
- [ ] Septic System
- [ ] Private Well
- [ ] Private Hauler

Is this project part of a larger project? [ ] Yes [X] No

NA ☐ If in a Shoreland Zone:

Percent of residential lot coverage (Max. 20%): _____

Percent of structure expansion (Max. 30%): _____

NA ☐ If Subdivision Review, number of lots proposed: _____

NA ☐ If a Private Way is proposed, number of lots served: _____

NA ☐ **If Site Plan Review, you must provide the following information:**

Total new square feet footprint of structures: _____

Total new square feet paving/parking: _____

Waiver Requests (attach details):

1. None
2. _____
3. _____
4. _____
5. _____

Attachments:

NA A. Letters of Approval

- ☐ Fire Department - Contact - 282-9986
- ☐ Ability to Serve – Maine Water - 282-1543
- ☐ Ability to Serve - Engineering Department (Sewer) - Contact - 284-9118
- ☐ Police Department - E-911 Road Name Designation - Contact - 282-5127

√ B. Letter to Planning Board describing project, waiver requests, proposed improvements, addressing permit requirements, etc.

√ C. Photographs of site.

√ D. Architectural renderings/drawings of proposed buildings, as required.

NA E. Engineered Plans, as required.

Fees (due at time of application):

Refer to "Attachment A Fees and Charges" of the Land Development Regulations for more information. Consult with Planning Staff if you have questions.

Required Signatures:

By signing this application, as the foresaid applicant or authorized agent:

- I certify that I have read and completely understand the application;
- I certify that the information contained in this application and it's attachments are true and correct;
- I understand that all information provided on this form and all other documents submitted as part of my proposal is a matter of public record;
- I understand that copies of this information may be supplied upon request to an interested party.
- I understand that additional funds may be required through the course of review for special studies, legal review costs, and/or engineering review.
- I understand that by submitting this application I am not guaranteed a place on any particular agenda. I further understand that the City Planner will place me on an agenda for review when the application is deemed substantially complete.

NA ☐ Project proposed to have 1 acre or more of site disturbance:

-Project may need to apply for a Maine Construction General Permit and shall comply with the requirements of DEP Chapter 500 Stormwater Regulations, as they apply.

Signature of applicant: _____ Date: 12/16/2020

Patrick Boothe, AIA of Caleb Johnson Studio

Signature of owner of property: _____ Date: _____

BIDDEFORD CODE ENFORCEMENT
205 MAIN STREET, BIDDEFORD, MAINE 04005
Phone (207) 284-9236 • Fax (207) 286-9382 • P.O. Box 586 • biddefordmaine.org

Online Building / Demolition Permit Application Instructions

This application form is a fillable PDF file and it is best to download to your computer and then open the file using either Adobe Acrobat or Adobe Reader when completing it. If needed, you can get the free Adobe Reader by clicking here.

Application Instructions:

1) Please fully fill out the application to the best of your ability.
2) If you do not know the correct information please leave the box blank.
3) When the form is complete, please click the yellow box near the signature line on page two, it will send the application to us via email.

PLEASE NOTE: *The $60.00 Building Permit application fee must be received prior to review (see payment section below).*

Building Permit Plan submittal instructions:

1) Please attached the drawings in PDF file format to the same email as application.
2) If you do not have PDF drawings, please drop hard copies off at the Code office, 205 Main Street, Suite 104 *(located on Main Street next to city clerk's office)*.

Payment:

1) Checks for $60.00 made payable to City of Biddeford can be submitted via USPS, FedEx, UPS or the Drop Box located outside our office door.
2) The City also accepts credit or debit cards; a 2.5% surcharge is added to the $60.00 permit fee however.

This application can also be downloaded, printed, manually completed, and then faxed to our office at (207) 286-9382. Please contact us at (207) 284-9236 if you have any questions or need assistance.

APPLICATION FEE

$60.00

Due at time of application

WORKSITE ADDRESS: _____

BUILDING/DEMOLITION PERMIT APPLICATION

Code Enforcement Office

205 Main Street
Biddeford, Maine 04005
(207)284-9236 FAX (207) 286-9382

For Office Use

Date: _____

Fee: $ _____

Issued By: _____

Permit #: _____

Per City Ordinance, all permit fees are NONREFUNDABLE

Date of Application:

_____

Construction Address: _____

Map/Lot: _____

Zone: _____

OWNER NAME: _____

ADDRESS: _____

CITY: _____

STATE : _____ ZIP: _____

TELEPHONE #: _____

EMAIL: _____

Type of Permit Requested: (Check all that apply)

☐ New structure ☐ Change of use
☐ Addition ☐ Change of occupancy
☐ Demolition ☐ Swimming Pool
☐ Remodel interior ☐ Move structure(s)
☐ Remodel exterior ☐ Commercial
☐ Sign ☐ Other: _____

Year of building being renovated: _____

CONTRACTOR NAME: _____

OR Same as owner ☐

ADDRESS: _____

CITY, STATE & ZIP: _____

Erosion control required: YES ☐ NO ☐

Site contractor erosion control Cert # _____

Complete Description of Work and Construction Cost of Project: **$ _____** _____

_____

_____

Present land use: _____ Proposed land use: _____

ARE THERE ANY ASBESTOS CONTAINED MATERIALS? YES ☐ NO ☐

IS THERE A PRESENCE OF LEAD YES ☐ NO ☐ CONTRACTOR CERT #: _____

Required Property Line Setbacks

FRONT: _____ BACK: _____

LEFT: _____ RIGHT: _____

Lot coverage

Allowed: _____

Proposed: _____

Water Setbacks

WETLAND: _____ STREAM: _____

TIDAL: _____ POND: _____

RIVER: _____

This property has: Town water ☐ **or** Well ☐ _____

Septic ☐ **or** Sewer ☐

Driveway opening DPW Yes ☐ **or** No ☐ _____

Sewer fee paid Yes ☐ **or** No ☐

Plumber: Same as applicant ☐

NAME: _____

ADDRESS: _____

CITY, STATE & ZIP_____

TELEPHONE: _____

SEPARATE PERMITS ARE REQUIRED FOR ELECTRICAL AND PLUMBING WORK

Electrician: Same as applicant ☐

NAME: _____

ADDRESS: _____

CITY, STATE & ZIP: _____

TELEPHONE: _____

PLEASE NOTE: Prior to ground disturbance erosion control must be in place.

Every permit issued shall become invalid unless the work on the site authorized by such permit is commenced within *180* days after its issuance, or if the work authorized on the site by such permit is suspended or abandoned for a period of *180* days after the time the work commenced.
2009 IBC, Section 105.5

Notes:

_____

_____

_____

_____

_____

DOCUMENTATION REQUIREMENTS

☐ **Floor Plans and Elevations** of new construction

- Include floor plan of existing structure as well as new construction for alterations and additions
- Detail removal of all partitions and sizing of any new structural beams
- Detail any new walls or permanent partitions

☐ **Cross Sections** with material description and framing details

- Stair details including dimensions of: rise/run, head room, guards/handrails, baluster spacing

☐ **Window and Door Schedules** (Indicate windows that meet egress requirements of 5.7 sq ft clear openable area, clear openable width of 20", and clear openable height of 24")

☐ **Foundation Plan** indicating soil type, footer dimensions, required drainage and foundation wall dimensions

☐ **Deck Construction** including: pier layout, framing, fasteners, guards stair dimensions

☐ **Plot Plan** including:

- Shape and dimension of the lot
- Footprint of existing and proposed structure with distance from actual property lines
- Other structures including decks, porches, sheds ,pools, and garages
- Location and dimensions of parking areas and driveways
- THIS DATA MUST BE ACCURATE! PROPERTY LINE LOCATIONS AND SETBACKS ARE THE APPLICANT'S RESPONSIBILITY.

☐ **Sewer Impact fee Receipt or New Septic Design** (when required)

☐ **Street opening permit (from DPW)**

****ALL DRAWINGS MUST BE TO SCALE OR HAVE DETAILED DIMENSIONS****

I certify that the information contained in this application and any related submissions to be true and accurate to the best of my knowledge. I understand that I am responsible for compliance with all applicable town, state and federal regulations and that failure to comply may result in the imposition of fines, legal fees, and the abatement of any violations to include abandonment of use and occupancy and corrective action such as the removal or modification of improvements if setbacks or other requirements have not been met and satisfied. I understand that this is an application and that I shall not begin any improvements until the appropriate permit (s) is/are issued nor will I make use of the improvements without first having obtained an occupancy permit. I further understand that any associated plumbing, electrical, and heating work to be undertaken in connection with this request requires separate permits. **In addition, I understand that if this project involves the creation of a new lot, a subdivision, as defined in Title 30-MRSA, Section 4401(4), as amended, has not been created without first obtaining the required approvals**

Press To Email

_____ _____

Signature of Owner/Applicant (*type name*) Date

_____ _____

Signature of Building Inspector (*type name*) Date

**********BELOW HERE FOR OFFICE USE ONLY**********

Other information:

1. Flood hazard development permit	Yes ☐	No ☐	6. Shoreland overlay district	Yes ☐	No ☐ _____
2. Coastal dune	Yes ☐	No ☐	7. Subdivison	Yes ☐	No ☐
3. Historic preservation district	Yes ☐	No ☐	8. Fire Marshall	Yes ☐	No ☐
4. Resource protection area	Yes ☐	No ☐	9. DEP	Yes ☐	No ☐
5. Other permits: _____	Yes ☐	No ☐	10. Army Corps	Yes ☐	No ☐

INSPECTION SCHEDULE

It is understood that the applicant or his/her representative will notify the Building Inspector for the following inspections at least 24 hours in advance of the required inspections

FOOTINGS AND BASEMENT WALLS

Approved by: _____ Date: _____
Do not back-fill until signed above

ROUGH PLUMBING

Approved by: _____ Date: _____

ROUGH ELECTRICAL

Approved by: _____ Date: _____

FRAMING

Approved by: _____ Date: _____

INSULATION

Approved by: _____ Date: _____

FINAL PLUMBING

Approved by: _____ Date: _____

FINAL ELECTRICAL

Approved by: _____ Date: _____

FINAL BUILDING

Approved by: _____ Date: _____

Erosion control inspection

☐ Date: _____

☐ Date: _____

☐ Date: _____

☐ Date: _____

☐ Date: _____

☐ Date: _____

☐ Date: _____

☐ Date: _____

Do not occupy until above has been signed and Certificate of Occupancy has been issued by the Building Inspector

Form current as of 3/30/2020

CALEB JOHNSON
STUDIO

12/04/2020

Roby Fecteau
Code Enforcement Director
City Hall
205 Main Street
Biddeford, ME 4005
Office # 207-284-9236
roby.fecteau@biddefordmaine.org

RE: 12 St Mary Street, Biddeford, ME (MSRD-2 Zone)
Biddeford Christain Ministries, Certificate of Occupancy

Mr. Fecteau,

Caleb Johnson Studio has been hired by the owner representative of the former St Mary Church, Biddeford Christain Ministries, in order to assist them in their efforts to reoccupy the building as a house of worship. Please refer to the below written life safety analysis of the existing building and the proposed use.

On 10/08/2020, Scott Welton and Daryen Granata of the State Fire Marshal's inspectors office walked through the building and identified some life safety issues to be addressed. These items are included in the analysis below.

Regards,

Patrick Boothe, AIA
Caleb Johnson Studio
ME Licensed Architect ARC #4204

Code References

- 2018 NFPA 101
- 2015 International Building Code (IBC)
- 2015 International Existing Building Code (IEBC)

<u>Existing Building Information in its Current Condition</u>

- Building Area: 1 story plus mezzanine with 9,035sf are on the first floor with 264sf of below grade mechanical space. The majority of the space is the sanctuary which includes an area of approximately 4000sf of pew seating space in sanctuary.
- 5 existing exits
- Calculated Occupancy: 727 occupants (653 in Sanctuary, 23 in Support Areas and 49 in Choir Balcony)

- Exterior Masonry Walls, Concrete and Wood floors, Type III-B or III-000 Construction
- No existing sprinkler system or fire alarm system exists

Use and Occupancy

The former space was used as a church as part of the Roman Catholic Diocese of Portland. It was built in 1922 and closed in 2009. It sat vacant for a number of years until it was purchased by the Fouzhou Zhong Zhou Christian Church in 2016. A conditional use permit was obtained in 2017 but no work was performed on the space. The intention is to re-occupy the space as a place of worship.

- NFPA: Existing Assemblies
- IBC: A-3 Assembly Group A-3 "Places of Worship"

Existing Building Code

Scope: No interior reconfigurations of walls or other similar work proposed other than repair of water damage and other deferred maintenance.

- NFPA 101: The project scope would be considered a "Renovation" without a change of use and is required to follow the provisions of Section 43.4. The general requirement being that the work shall not make the building less conforming of the code.
    - In addition, section 13.1.1.4.2 of Existing Assembly Occupancies states : An existing building housing an assembly occupancy established prior to the effective date of this Code shall per permitted to be approved for continued use if...in the opinion of the authority holding jurisdiction, reasonable life safety against the hazards of fire, explosion, and panic is provided and maintained.
- IEBC: The project scope would be considered a Level 1 Alteration without a change of use. As a result, the occupancy shall comply with Chapter 7 of the IEBC. The provisions of the IEBC Chapter 7 limit requirements in this situation to fire protection and means of egress to be done in a manner that "maintains the level of protection" of the existing building.

There are no prescriptive provisions that would require the building to have a sprinkler system or fire alarm system installed.

Issues to be addressed before re-occupancy:

Below is a list of required action items to be implemented before a certificate of occupancy is issued:

- Repair the existing boiler, or install a new heating system to provide heat to the building.
- Bring existing electrical up to NFPA 70 standards, such as repairs to open junction boxes, exposed wiring etc. This would require a walkthrough with an

licensed electrician who will be performing the work and the local electrical inspector

- Repair various areas of water damage
- Install a door closer at the existing mechanical room door to compartmentalize a potential fire in that space.
- Per Daryen Granata → *May require repair to the bottom of the stairs leading to the mechanical room where there is rust damage. At a minimum, the city may ask that a structural engineer certify the stair to be safe.
- Per Daryen Granata →. *May require removing pews to limit occupancy to be less than 300 persons.
- Per Daryen Granata → *May require a heat detection and notification system up to the sanctuary (light and audible alarm) from the basement and mechanical room in order to notify occupants in the event of a fire in those lower level spaces
- Inspections and any other items as requested by Biddeford Code Enforcement Department

Photos of Existing Building:

Exterior from St Mary Street

Sanctuary

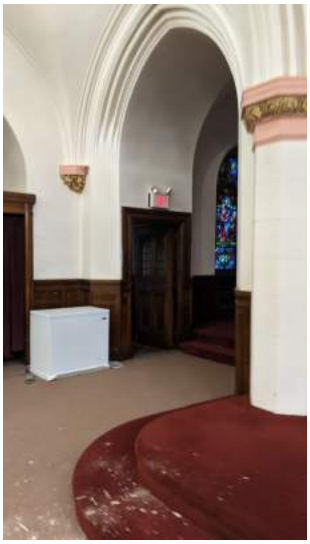

View Towards Exit Discharge #1

View Towards Exit Discharge #1

Balcony

Conference Room

Existing Boiler

Stairs at the bottom of the Mech room

FINDINGS OF FACT AND CONCLUSIONS OF LAW
CONDITIONAL USE PERMIT

Pursuant to the provisions of the City of Biddeford Land Development Regulations, Articles XI (Site Plan Review) and Article VII (Conditional Uses), the Biddeford Planning Board has considered the application of the **Biddeford Christian Ministries** to re-occupy the former St. Mary's Church located at 12 St. Mary's Street, including supportive data, public hearing testimony and related materials contained in the record. Based on the materials submitted, Public Comment, and Staff's review and recommendation, the Planning Board makes the following Findings of Fact and Conclusions of Law:

Findings of Fact:

	SUBJECT	***DATA/INFORMATION***
1.	Applicant:	Biddeford Christian Ministries c/o Gerry Lachance
2.	Owner of Property:	Biddeford Christian Ministries 115 Salt Rock Road Baltic CT 06330 860-235-6203
3.	Agent:	Caleb Johnson Studio Patrick Boothe, architect. 110 Exchange Street, 2nd Floor Portland, ME 04101 207-283-8777 or 740-418-5475
4.	Project Location:	12 St. Mary's Street
5.	Project Tax Map #/Lot #:	Tax Map 38, Lot 28
6.	Existing Zoning:	MSRD-2
7.	Overlay Zoning:	None
8.	Existing Use:	Vacant Church
9.	Proposed Use:	Chinese Christian Church
10.	City Approvals Required:	Conditional Use Permit (Reviewed under Article XI (Site Plan Review))
11.	Uses in the Vicinity:	Restaurant, Residential
12.	Parcel Size:	.9 Acres +/-
13.	Number of Lots/Units in Subdivision:	N/A
14.	Minimum Lot Size Required: Provided:	2,000 SF .9 Acres +/-
15.	Frontage Required: Provided:	50 feet. 125' on St. Mary's Street, 200' on Spruce Street
16.	Front Setback Required: Provided:	15 feet N/A – Preexisting Condition

DRAFT

17.	Side Setbacks Required: Provided:	10 feet N/A – Preexisting Condition
18.	Rear Setback Requires: Provided:	10 feet N/A – Preexisting Condition
19.	Height Requirements: Provided:	Maximum 3 Stories, or 35 feet N/A – Preexisting Condition
20.	Water Supply:	Maine Water (Public)
21.	Sewerage Disposal:	City of Biddeford
22.	Solid Waste Disposal:	Private Hauler
23.	Fire Protection:	City of Biddeford
24.	Floodplain Status:	None
25.	Wetland/Surface Water Impacts:	None
26.	Soil Study Provided:	N/A
27.	Parking Spaces Required:	TBD
28.	Parking Spaces Provided (total): # Handicapped Spaces:	45 (Plus provisions for an additional 5) 2
29.	Ownership of Road:	St. Mary's Street is a City Road
30.	Building Footprint Existing: Proposed: Net Change:	 0 SF 5,718 SF 5,718 SF
31.	Building Floor Area Existing: Proposed: Net Change:	 0 SF 5,718 SF 5,718 SF
32.	Estimated Site Development Costs:	N/A
33.	Financial Capacity Letter:	N/A
34.	Waivers Needed:	a. 158 Parking Spaces
35.	Waivers Granted:	a. 158 Parking Spaces
36.	Variances Needed for Approval:	None.
37.	Other Permits Obtained:	None.
38.	Other Non-City Permits Required:	None.
39.	Covenants, By-laws, Restrictions Required by the Planning Board:	None.
40.	LDR Attachment A: Fess Paid:	Yes
41.	Review History: Conditional Use Review:	 March 3, 2021

DRAFT

Conclusions of Law:

1. The proposed use meets specific requirements set forth in this ordinance and would be in compliance with applicable state or federal laws;

2. The proposed use would not create fire safety hazards by providing adequate access to the site, or to the buildings on the site, for emergency vehicles and would not create hazards through the storage of chemicals and wastes;

3. The proposed exterior lighting, where allowed, would not create hazards to motorists traveling on adjacent public streets or is adequate for the safety of occupants or users of the site or would not damage the value and diminish the usability of adjacent properties;

4. The provisions for buffers and on-site landscaping provide adequate protection to neighboring properties from detrimental or unsightly features of the development;

5. The proposed use would not have a significant, detrimental effect on the use and peaceful enjoyment of abutting property as the result of noise, vibrations, fumes, odor, dust, glare, hours of operation, or other causes;

6. The provisions for vehicular loading and unloading and parking and for vehicular and pedestrian circulation on the site and onto adjacent public streets would not create hazards to public safety or traffic congestion;

7. The proposed use would generate a volume of traffic that can reasonably be accommodated by the existing road network, or would not create unreasonable traffic hazards or would not exacerbate an existing traffic hazard, or would not create unreasonable traffic congestion;

8. The proposed use would not have a significant, detrimental effect on the value of adjacent properties, which could be avoided by reasonable modification of the proposal;

9. The proposed use would not have an adverse impact on the privacy of the residents of the immediate area (within 500 feet) which could be avoided by reasonable modification of the proposal.

10. The proposed use would be in compliance with Biddeford's comprehensive plan;

11. The proposed use would not have an adverse impact on the immediate neighborhood or the community relative to architectural design, scale, bulk and building height, identity and historical character, or visual integrity, which could be avoided by reasonable modification of the proposal;

DRAFT

12. The design of the site would not result in significant flood hazards or flood damage or would be in conformance with applicable flood hazard protection requirements;

13. Adequate provision has been made for disposal of wastewater or solid waste or for the prevention of ground or surface water contamination;

14. Adequate provision has been made to control erosion or sedimentation;

15. Adequate provision has been made to handle stormwater runoff or other drainage problems on the site; and the proposed development will not unduly burden off-site surface water systems;

16. The proposed water supply would meet the demands of the proposed project (and for fire protection purposes, if applicable.)

17. Adequate provision has been made for the transportation, storage, and disposal of hazardous substances and materials as defined by state law;

18. The proposed use would not have an adverse impact on scenic vistas, historic sites, archeological resources, or on significant wildlife habitat or wetland areas and water bodies, which could be avoided by reasonable modification of the proposal.

Approval Granted:

Based on the evidence available and the conclusions above, the Biddeford Planning Board approves the Conditional Use Permit for the proposed project summarized above, located at 12 St. Mary's Street (Tax Map 38, Lot 28) in accordance with the submitted application, supporting data, representations made, other related materials on file, and the following Conditions of Approval:

1. **Prior to issuance of any occupancy permits:**
   a. **Any roof drains connected to the sewer system shall be disconnected.**
2. **Prior to the issuance of any sign permits any signage must be approved by the Historic Preservation Commission.**
3. **The applicant shall obtain all other pertinent local, state and federal permits, licenses, and insurance such as blasting, building, electrical, plumbing, etc prior to commencing business, unless authority issuing said permit allows for such actions.**
4. **Standard Conditions of Approval apply.**

DRAFT

_____
Planning Board Chairperson

_____
Date

DRAFT

PLANNING BOARD REPORT

February 25, 2021

Biddeford Planning Board
Greg Tansley, City Planner
City of Biddeford
205 Main Street
Biddeford, Maine 04005

Application: Marijuana caregiver retail store – Blossom Retail, LLC
45 Boulder Way (Tax Map 2 Lot 56)
Conditional Use Review
Review Status: New application.

Board members and Mr. Tansley,

The following application information has been provided for review:

1. Application form dated 12/7/2021.
2. Cover letter and submittal information dated 2/10/2021, (including compliance narrative, odor mitigation plan, waste disposal plan, plan exhibits and architectural rendering). Prepared by Blossom Cannabis.
3. Plan entitled: *Floor Plan and Schedules; Blossom Cannabis- Biddeford, 45 Boulder Way, Biddeford, ME.* Issue Date: 12/31/2020 (Plan Date 02-08-21). Prepared by ALPHAarchitects.

With review of the above information and the Land Development Regulations, I offer the following comments on compliance with the City's ordinances.

PROJECT DESCRIPTION

The project site, located in the Industrial -3 Zone, is the former Denny's restaurant (Mountain Road and Bdfd Connector) where Mi Pueblo Restaurant is currently operating. The proposal is to partition approximately 1600 SF of the total building space leaving 4400 SF to remain for the restaurant use. The applicant is seeking approval to operate a medical marijuana retail storefront within 650 SF of the partitioned space (reserving 950 SF for future expansion). The proposal only includes renovations for the building and no site improvements.

COMPLETENESS REVIEW

The application is before the Planning Board as required by Table of Land Uses, Article V (Establishment of Zones) of the Land Development Regulations where Marijuana caregiver retail store is permitted in the I-3 zone as a Conditional Use, per Article VII and Article VI Performance Standards (specifically Section 77).

The applicant has prepared and submitted narratives that describe the application's compliance with the above provisions along with the required information related to program space and odor management. The **application appears to be complete** for Board's consideration.

COMPLIANCE WITH THE CITY'S ORDINANCES

As referenced above the proposed development does not include any site improvements and it does not appear that any are required. Parking for retail is 1 space per 300 SF resulting in six parking spaces being required. This is provided out of the 100-plus space parking lot shared with remaining portion of the building (Mi Pueblo's) and the existing credit union.

With no site improvements to regulate, the review focuses on compliance to the Conditional Use Standards (Sec. 6 in Art. VII) and Performance Standards for Medical Marijuana (Sec 77 in Art. VI, recently revised). The applicant has provided a narrative that addressees these standards and it appears they demonstrate compliance.

WAIVER REQUESTS

None requested.

CONCLUSION

The submitted application for a Conditional Use Permit to establish a Marijuana Caregiver Retail Store is in order. Prior to or as part of final approval, review by the Fire and Police departments should be made and their comment addressed. After review of the application material, presentation by the applicant, and public testimony, the Planning Board may want to consider granting conditional approval.

SUGGESTED MOTION

Move to grant conditional approval for the Conditional Use Permit application for Blossom Retail Inc., at 45 Boulder Way, Tax Map 2, Lot 56…

Suggested conditions:

Prior to the issuance of any occupancy permits:

1. Standard Conditions of Approval apply.

2. The applicant shall obtain all other pertinent local, state and federal permits/licenses/insurance such as building, electrical, plumbing, etc., prior to commencing business.

3. Applicant shall comply with Land Development Regulations, Article VI (Performance Standards), Section 77 (Marijuana establishments) including, but not limited to, the odor of marijuana shall not be detectable off-premises, meaning not-detectable on any property that is not under control of the establishment.

Feel free to contact me with questions.

Best regards,

Christopher Di Matteo
City of Biddeford Contract Planner.
cdimatteo@longmeadowpla.com
207.604.4245

CITY OF BIDDEFORD, MAINE
PLANNING BOARD

P.O. Box 586, 205 Main Street Biddeford, Maine 04005
207-284-9115

APPLICATION FORM

Type of Application:

☐ Shoreland Zoning Permit ☐ Site Plan Review ☐ Extraction
☒ Conditional Use Permit ☐ Subdivision ☐ Private Way
☐ Other: _____

Applicant Information:

Applicant's Name: Blossom Retail, LLC / David Carr, Caregiver
Applicant's Mailing Address: 652 Deering Ridge Road, East Waterboro, ME 04030
Applicant's Telephone: 207-231-1921 DCarr@Blossommj.com
What is Applicant's legal interest in the property?
☐ Owner ☐ Potential Buyer with Contract ☒ Lease/Rental Agreement

Owner's Name: BIDDEFORD PLAZA LLC Co-Owner C/O RAY & DIANE MAILHOT
Owner's Address: 13 RIVERS EDGE DR KENNEBUNK, ME 04043-7738
Owner's Telephone: 207-967-0606

Agent's Name: (LL) Don Pilon, The Bean Group (Tenant) Robert Baldacci, F.O.Bailey
Agent's Address: 323 North Street, Saco, ME 04072 183 US Route 1, Falmouth, ME 04105
Telephone: 207-590-0507 207-756-2063

Engineer/Surveyor: ALPHAarchitects / Mark Sengelmann
Engineer/Surveyor's Address: 17 Chestnut Street, Suite 102, Portland Maine 04101
Telephone: 207-761-9500

Project Location and Lot Information:

Street Address: 45 Boulder Way
Tax Map: PID119952 Lot: Book and Page: 14243/0253
Current Zoning: I-3 Shoreland Zoning: NO

Link to tax map: http://gis.vgsi.com/biddefordme/Parcel.aspx?Pid=119952

Size of lot: 6.5 [x] acres [ ] s.f. Lot Frontage: _____

Existing Use of Property: Former Denny's restaurant, currently leased to and operating as Mi Pueblo restaurant. Restaurant use would continue, but in a smaller footprint (approx. 4,400 sf.) with common area exit and employee bathrooms

Property currently serviced by:

- [x] City Road
- [x] Public Sewer
- [x] Public Water
- [x] Public Trash
- [ ] Private Road
- [ ] Septic System
- [ ] Private Well
- [ ] Private Hauler

Slope Conditions in Area of Construction (if applicable):

[ ] Flat (0-3 % slope) [ ] Rolling (3-8% slope) [ ] Hilly (8-15% slope) [ ] Steep (15% + slope)

Are there any wetlands or waterbodies on the site? [ ] Yes [x] No If yes, attach information

Do you plan to bring fill onto the lot? [ ] Yes [x] No If yes, attach information

Description of proposed use of property:

Project/Proposed Use Description: Caregiver Retail Storefront, Medical Cannabis.

We propose to divide the existing space to create a separate 1600 square feet. Approximately 650 sq ft to be used as a medical cannabis caregiver storefront. 950 sq ft of space to be reserved for future use. 4,400 square feet will continue operations as a restaurant.
Common areas proposed will be shared rear egress and employee bathrooms.
Preliminary concept plan devised by ALPHAarchitects is attached.

Property to be serviced by:

- [x] City Road
- [x] Public Sewer
- [x] Public Water
- [x] Public Trash
- [ ] Private Road
- [ ] Septic System
- [ ] Private Well
- [ ] Private Hauler

Is this project part of a larger project? [ ] Yes [x] No

☐ If in a Shoreland Zone:

Percent of residential lot coverage (Max. 20%): _____

Percent of structure expansion (Max. 30%): _____

☐ If Subdivision Review, number of lots proposed: _____

☐ If a Private Way is proposed, number of lots served: _____

☐ **If Site Plan Review, you must provide the following information:**

Total new square feet footprint of structures: _____

Total new square feet paving/parking: _____

Waiver Requests (attach details):

1. _____
2. _____
3. _____
4. _____
5. _____

Attachments:

A. Letters of Approval

☐ Fire Department - Contact Chief or Deputy Chief - 282-9986

☐ Ability to Serve for Water Service – Maine Water - 282-1543

☐ Ability to Serve for Sewer Service- Engineering Dept (Sewer) - Tom Milligan 284-9118

☐ Police Department - E-911 Road Name Designation - Contact Joanne Fisk - 282-5127

B. Letter to Planning Board describing project, waiver requests, proposed improvements, addressing permit requirements, etc.

C. Photographs of site.

D. Architectural renderings/drawings of proposed buildings, as required.

E. Engineered Plans, as required.

Fees (due at time of application):

Refer to "Attachment A Fees and Charges" of the Land Development Regulations for more information. Consult with Planning Staff if you have questions.

Required Signatures:

By signing this application, as the foresaid applicant or authorized agent:

- I certify that I have read and completely understand the application;
- I certify that the information contained in this application and it's attachments are true and correct;
- I understand that all information provided on this form and all other documents submitted as part of my proposal is a matter of public record;
- I understand that copies of this information may be supplied upon request to an interested party.
- I understand that additional funds may be required through the course of review for special studies, legal review costs, and/or engineering review.
- I understand that by submitting this application I am not guaranteed a place on any particular agenda. I further understand that the City Planner will place me on an agenda for review when the application is deemed substantially complete.

☐ Project proposed to have 1 acre or more of site disturbance:

-Project may need to apply for a Maine Construction General Permit and shall comply with the requirements of DEP Chapter 500 Stormwater Regulations, as they apply.

Signature of applicant: _____ Date: 12/7/20

BIDDEFORD PLAZA LLC

Signature of owner of property: Raymond E Marchat Date: 12/7/20

IF PLAN APPROVAL IS ANTICIPATED, PROVIDE 2 FULL SIZE MYLARS & 2 FULL SIZE PAPER COPIES FOR BOARD SIGNATURE (AS APPLICABLE). CHECK WITH PLANNING STAFF FOR CLARIFICATION.

CHECKLIST FOR *SITE PLAN* REQUIREMENTS

YES	NO	
☐	☐	Be on sheet size of 24 by 36 inches.
☐	☐	The scale of said plan shall be not less than one inch equals 50 feet and shall be indicated on the plat by use of a bar scale.
☐	☐	The plan shall bear the date, title, north point.
☐	☐	The plan shall contain a location or vicinity sketch (suggested scale one inch equals 800 feet).
☐	☐	The plan shall contain the name and address of the developer and applicant.
☐	☐	All appropriate dimensional requirements.
☐	☐	Existing and proposed easements.
☐	☐	Plan of the site showing existing watercourses and water bodies, seasonal wet areas.
☐	☐	Plan of the site showing soil type and location of test borings.
☐	☐	Location of all existing and proposed utilities.
☐	☐	Topographic contours (every five percent for zero to three percent slope; or every two feet for steeper areas).
☐	☐	Plan should include preservation and supplementation of existing dominant vegetation.
☐	☐	Plan shall indicate which features are to be retained and which are to be removed or altered.
☐	☐	Location of stonewalls, graveyards, fences, stands of trees, and other important unique natural areas and site features, including but not limited to floodplains, deer wintering areas, significant wildlife habitats, fisheries, scenic areas, habitat for rare and endangered plants and animals, unique natural communities and natural areas, sand and gravel aquifers, and historic and/or archaeological resources, together with description of such features.
☐	☐	Plan view of all buildings with their use, size, location, and first-floor elevation in respect to grade.
☐	☐	Standard elevation view of existing and proposed buildings or structures on-site.

YES	NO	
☐	☐	Outline of any buildings located within 200 feet of such existing or proposed buildings or structures indicating their shape, size, location, heights and volume.
☐	☐	Existing use of abutting properties shall be identified with approximate location of any structures thereon including access roads.
☐	☐	Location, width, curbing, and paving of access ways, egress ways, and streets within the site for both pedestrian and vehicular use.
☐	☐	The location of off-street parking and loading spaces with a layout of the parking indicated.
☐	☐	The size and proposed location of water mains and sanitary sewerage facilities will all necessary engineering data.
☐	☐	The size and location of all other existing and proposed public service connections including, without limitation, gas lines, power lines, telephone lines, and fire alarm connections and locations, indicating whether above or below ground.
☐	☐	The type, nature, and composition of all solid, liquid, and gaseous waste, industrial or otherwise, and the location, type, and design criteria of the storage and disposal facilities dealing with such waste.
☐	☐	A landscape plan and open space areas indicating grade change, vegetation to be preserved, new plantings used to stabilize areas of cut and fill, screening; plus size, location, purpose and type of vegetation.
☐	☐	A drainage plan including location, elevation, layout of catch basins and other surface and subsurface drainage features.
☐	☐	Location, size and design of proposed signs and other advertising or instructional devices.
☐	☐	Existing and proposed contours and finished grade elevations as well as the type, extent, and location of existing and proposed landscaping and open space areas which will be retained.
☐	☐	Location and type of lighting for outdoor facilities.
☐	☐	Lines of existing and proposed abutting streets showing width.
☐	☐	Surveyed property lines showing their bearing and distances and monument locations.
☐	☐	If subdivision is involved, the lines and names of all proposed streets, lanes, ways, or easements intended to be dedicated for public or private use.

YES	NO	
☐	☐	Provide copies of any covenants or restrictions that are intended to cover all or part of the land area to be developed.
☐	☐	Indicate limits of the wetland areas on the property.
☐	☐	Delineate existing zoning boundaries within 1,000 feet of the site.
☐	☐	Stamp and signature of either a Maine licensed land surveyor, professional engineer, or architect responsible for said plan.
☐	☐	Any other exhibits or data deemed necessary by the Planning Board to evaluate the proposed development for site plan review purposes.

February 10, 2021

Dear City of Biddeford Panning Board,

Enclosed please find my site plan application and supplemental materials prepared in anticipation of a conditional use approval for a medical marijuana retail storefront at 45 Boulder Way.

Materials enclosed are:

-Introduction to Blossom Cannabis

-Proof of Compliance with Performance Standards

-Odor Mitigation Plan

-Waste & Wastewater Disposal Plan (Includes Hazardous Waste Disposal Plan)

-Visual representation of Odor Mitigation and Marijuana Waste Storage Plan

-Architectural rendering of the proposed renovation.

Thank you for your time, and I look forward to presenting these documents in person at an upcoming Planning Board Meeting.

Best Regards,

David S. Carr, Jr.
Owner
AMS Cultivation D/B/A Blossom Cannabis

Proposed Medical Marijuana Caregiver Storefront

Prepared for: City of Biddeford Planning Board

February 2021

Outline

1) Executive Summary
2) Market Analysis
3) Retail Design
4) Organization & Management
5) Products
6) Marketing
7) Revenue & Tax Analysis
8) About the Owner

Executive Summary

Blossom Retail, LLC (Blossom) seeks to operate a medical marijuana caregiver storefront at 45 Boulder Way, Biddeford, Maine, located in the I-3 zone. The company has secured an option for a 2 year lease for a 650 square foot caregiver storefront with an additional 1100 square foot reserved for future expansion. The lease has one option to renew for an additional 3 year term, and one additional 5 year term. The company intends to retail proprietary and third party medical cannabis flowers, extracts, and edibles as well as an array of branded merchandise.

Our employees will be well trained and qualified to recommend appropriate products for patients seeking alternative therapies.

Blossom plans to operate 7 days a week, from 10am-7pm.

Market Analysis

Our Market

Market experts predict that with the roll out of adult-use (recreational) cannabis in Maine, the medical cannabis market in Maine will transform over the next several years into a highly professional, regulated, niche patient market. While adult use will attract new users and tourists and eventually represent the majority of sales in Maine, Medical cannabis will retain its critical role of forming long term relationships with and servicing local patients seeking higher dosed, higher quality, affordable cannabis products.

Our Competitive Advantage

Our competitive advantages will be the quality of our products, superior patient service, location, pricing and branding.

Retail Design

Our retail design will convey a professional, welcoming environment. All products containing THC will be kept safely stored behind the sales counters and will only be available to patients with valid medical cards. All products will be stored in a vault at night. All local and state regulations pertinent to retail caregiver storefronts will be strictly followed.

Organization & Management

The company will provide approximately 6 full time jobs in Biddeford, ranging from $16/ hour to $60,000 year.

The following job positions will be filled:
• 1 General Manager ($60,000/ year)
• 1 Assistant General Manager ($45,000/year)
• 2 Budtender ($20/hour)
• 2 Budtender Assistant ($16/hour)

Roles and Responsibilities

The responsibilities of each position within the are detailed below.

General Manager
The General Manager (GM) is responsible for providing outstanding patient experience while maximizing revenue goals, leading the management & training staff, and ensuring compliance with all inventory, security, regulation and system protocols. The GM is also responsible for forecasting inventory levels, ordering and receiving products, and maintaining accurate systems for regulatory reporting and sales analysis.

Assistant General Manager
The Assistant General Manager will help plan and manage all aspects of day to day operations,including managing personnel, establishing strong patient relationships, inventory control and handling the daily ebb and flow of all store related matters while adhering to strict state guidelines and regulations. The Assistant GM will communicate effectively with all levels of the organization to implement and maintain protocols,

policies, and procedures in accordance with company standards and state and local laws.

Budtender

The Budtender must have expert knowledge of cannabis products. The Budtender will educate and serve customers while maintaining compliance with all state regulatory guidelines.

Budtender Assistant (Sales Associate)

The Budtender Assistant is an entry level associate position that serves as an assistant to the Budtender. Budtender Assistants will acquire excellent knowledge of cannabis products and will be given a clear path and timeline to promotion to a Budtender position.

Products

Blossom's core offerings will be proprietary medical cannabis flower and extracts. We will also sell third party medical flower extracts, edibles, tinctures, infused beverages, hemp based CBD products, and an array of branded merchandise, such as apparel and souvenir items. All packaging and labeling regulations will be adhered to. For packaging examples, see Appendix B

Marketing

Blossom will consistently offer high quality, high demand medical cannabis products and deliver excellent patient service, which will result in a solid repeat local patient base for patients seeking alternative therapies to traditional medicine. For our brand promise, see Appendix B.

The company will also engage cannabis specialized marketing and branding experts to assist in continued brand development and marketing strategies that will enable us to achieve our business goals. All marketing and advertising will be in strict compliance with state law.

Blossom will adopt the following sales and marketing strategies:

- Advertise in community based magazines and other media as allowed by state law
- Social media marketing
- Word of mouth
- Advertise on industry marketing sites
- Attend industry community events and trade shows
- Adopt and communicate a local social responsibility plan

Revenue & Tax Analysis

The projected sales for the retail storefront are approximately $4,000 per day / $1,500,000 per year. This revenue number will support approximately 6 local full time jobs and an annual payroll of $250,000,

Maine sales tax (5.5%) will be approximately $80,000 per year.

Management Team

David Carr, Jr., Owner and Operations Manager

Medical Marijuana Registry #CGR 26643

David will be responsible for overseeing the retail operation. He has extensive experience running successful cannabis cultivation, extraction and retail businesses in Colorado. He was the General Manager and equity owner of The Crown Cannabis, a dual licensed dispensary/cultivation facility in Colorado Springs. David was also the extraction manager at Apothecary Extracts, the first Class 1,Division 1 Lab in Colorado, which grossed over 5 million per year and won multiple awards and competitions. David holds dual degrees in Business and Organic Chemistry from the University of Florida.

Elizabeth Baldacci, Business Manager

Elizabeth first learned of the healing qualities of medical cannabis through her search for alternative pain management therapies for her mother, who was dying of cancer. Over the years, her fascination for the plant blossomed into a full time career in the cannabis industry. Elizabeth will be responsible for permitting, licensing, compliance, finance, marketing PR, community and government relations. Prior to her transition to cannabis, Elizabeth owned Baldacci Communications, a Portland based public relations agency, where she assisted numerous multi-million dollar corporations with their business interests in Maine. She was also a co-area developer for Firehouse Subs with her husband Bob, where she oversaw site design and construction, operations, marketing, and compliance. She is a co-owner of the Firehouse Subs in Biddeford, which serves as the franchisee training center for the Northeast.

Earlier in her business career, she spent fifteen years as an executive benefits representative for Guardian Life and UNUM, where she won numerous national sales awards. She has served on several local boards, including Maine Angels, an investment

group that has invested over $28 million in Maine start up companies since its founding in 2003. Elizabeth was raised in Maine, attended Greely High School, earned her BA from William & Mary and completed a graduate program in Public Relations at the University of Virginia.

Brand Promise

Brand Promise

3

Goodbye Pharma. Hello Farmer.

Goals

- ✓ Offer the best quality medical cannabis products in Maine.
- ✓ Share our deep knowledge of and passion for the extraordinary healing nature of cannabis.
- ✓ Partner with people and companies that share our core values of honesty, fairness, and compliance with state law.
- ✓ Do the right thing for our people, our patients and the public

Retail Design Concept

Blossom Cannabis Floor Plan
Medical Marijuana Retail Storefront / 45 Boulder Way

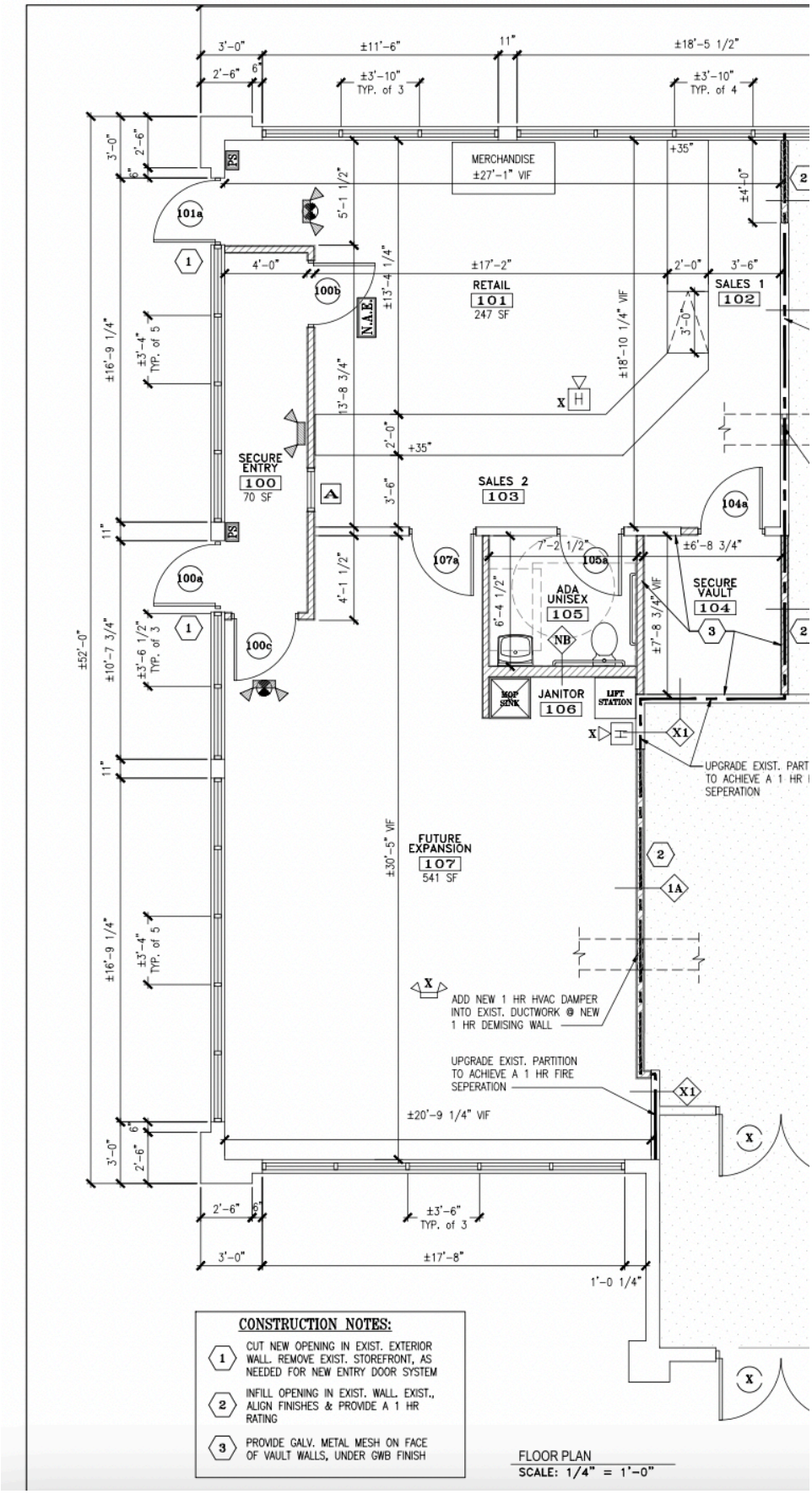

Proof of Compliance with Performance Standards
Blossom Cannabis

The proposed use meets specific requirements set forth in this ordinance and would be in compliance with applicable state or federal laws;

LDR:224

Section 6 LAND DEVELOPMENT REGULATIONS Section 6

2. The proposed use would not create fire safety hazards by providing adequate access to the site, or to the buildings on the site, for emergency vehicles and would not create hazards through the storage of chemicals and wastes;

Attached architectural renderings demonstrate proof of compliance with fire and life safety code. Construction drawings will be reviewed and approved by the state Fire Marshal before construction begins.

3. The proposed exterior lighting, where allowed, would not create hazards to motorists traveling on adjacent public streets or is adequate for the safety of occupants or users of the site or would not damage the value and diminish the usability of adjacent properties;

Exterior lighting is existing. We do not propose any changes.

4. The provisions for buffers and on-site landscaping provide adequate protection to neighboring properties from detrimental or unsightly features of the development;

On-site landscaping is existing. We do not propose any changes.

5. The proposed use would not have a significant, detrimental effect on the use and peaceful enjoyment of abutting property as the result of noise, vibrations, fumes, odor, dust, glare, hours of operation, or other causes;

Odor mitigation plan is included in this packet. Hour of operation will be consistent with other approved retail businesses in the I-3 zone.

6. The provisions for vehicular loading and unloading and parking and for vehicular and pedestrian circulation on the site and onto adjacent public streets would not create hazards to public safety or traffic congestion;

The site is set back several hundred feet from the nearest public street, Mountain Road. There will be no hazards to public safety or traffic congestion as a result of our retail location at 45 Boulder Way.

7. The proposed use would generate a volume of traffic that can reasonably be accommodated by the existing road network, or would not create unreasonable traffic hazards or would not exacerbate an existing traffic hazard, or would not create unreasonable traffic congestion;

We do not expect an increase in traffic beyond the normal retail traffic that is already flowing to Atlantic Federal Credit Union and Mi Pueblo restaurant. There will be no unreasonable traffic hazards or congestions, and there is not an existing traffic hazard in that area.

8. The proposed use would not have a significant, detrimental effect on the value of adjacent properties which could be avoided by reasonable modification of the proposal;

The addition of a second tenant with the existing structure will increase the value of the property.

9. The proposed use would not have an adverse impact on the privacy of the residents of the immediate area (within 500 feet) which could be avoided by reasonable modification of the proposal;

There will not be any new construction. All renovations will be performed within the existing structure, therefore there will be no new impact on the privacy of residents in the immediate area.

10. The proposed use would be in compliance with Biddeford's Comprehensive Plan;

The City Council has recently approved medical marijuana retail as a conditional use, which is in line with the City's Comprehensive Plan.

11. The proposed use would not have an adverse impact on the immediate neighborhood or the community relative to architectural design, scale, bulk and building height, identity and historical character, or visual integrity, which could be avoided by reasonable modification of the proposal;

There will not be any new construction. All renovations will be performed within the existing structure, therefore there will be no new impact on the immediate neighborhood or the community relative to architectural design, scale, bulk and building height, identity and historical character, or visual integrity.

12. The design of the site would not result in significant flood hazards or flood damage or would be in conformance with applicable flood hazard protection requirements;

We do not propose any changes to the exterior of the building, therefore, the addition of our retail location would not result in significant flood hazards or flood damage and is in conformance with applicable flood hazard protection requirements.

LDR:225

Section 6 BIDDEFORD CODE Section 7

13. Adequate provision has been made for disposal of wastewater or solid waste or for the prevention of ground or surface water contamination;

Solid waste and wastewater plan is included in this packet.

14. Adequate provision has been made to control erosion or sedimentation;

Not Applicable. The building is existing and no structural exterior renovations are planned.

15. Adequate provision has been made to handle stormwater runoff or other drainage problems on the site; and the proposed development will not unduly burden off-site surface water systems;

Not Applicable. The building is existing and no structural exterior renovations are planned.

16. The proposed water supply would meet the demands of the proposed use for fire protection purposes;

Yes.

17. Adequate provision has been made for the transportation, storage, and disposal of hazardous substances and materials as defined by state law;

There will be no hazardous substances on site. Marijuana waste disposal plan is included as part of this package.

18. The proposed use would not have an adverse impact on scenic vistas or on significant wildlife habitat or wetland areas and water bodies which

could be avoided by reasonable modification of the proposal;

Not Applicable. The building is existing and no exterior renovations are planned.

19. When located in the Shoreland Zone, the proposed use would meet the purposes of Shoreland Zoning as identified in Article XIV, Section 1 (Purposes) of this ordinance. [Amended 2-2-2010 by Ord. No. 2009.98]

Not Applicable. The building is existing and no exterior renovations are planned.

Performance Standards in the Revised Section 77 Marijuana establishments:

- All marijuana establishments shall be located indoors. Any common areas, including, but not limited to storage areas and building facilities, shared with another marijuana establishments shall be clearly identified as such on the site plan or conditional use application.

Marijuana establishment located exclusively indoors. Please see site plan included in this package.

- Odor management. For all Marijuana establishments, the odor of marijuana shall not be detectable off-premises, meaning not detectable on any property that is not under the control of the establishment. To prevent and control marijuana odors, an odor control plan shall be submitted as part of the site plan application describing the odor(s) originating or anticipated to originate at the premises and the control technologies to be used to prevent such odor(s) from leaving the premises. The odor control plan shall, at a minimum, include the following:
    1. A facility floor plan that identifies the locations of all odor-emitting activities and sources. The plan shall also identify the location of doors, windows, vents, HVAC systems, odor control systems and other relevant information.

Please see odor mitigation plan "visual representation" included in this packet. Drawing shows all odor emitting sources, as well as doors, windows, vents, HVAC systems, and placement of odor control systems.

    2. A list of specific odor-emitting activities and sources, and a description of the processes that will take place at the facility, including, but not limited to, vegetative flowering, processing and storage.

A list of odor emitting activities are included in the Odor Mitigation Plan enclosed in this package.

3. For each odor-emitting activity or source, a description of the administrative procedures as well as the engineering processes, technologies, and equipment the facility will use.

- Administrative controls shall include, at a minimum: management practices to isolate odor activities and sources, use of standard operating procedures, employee training, regular equipment inspections and maintenance of inspection logs.
- Engineering controls shall include, at a minimum, building design features; use of equipment and technology to address each specific odor emitting activity or source; a systems and equipment maintenance and replacement schedule; and evidence that proposed equipment and technology are sufficiently capable and appropriately sized consistent with marijuana industry best practices for control technologies designed to effectively mitigate odors. Marijuana establishments shall implement appropriate ventilation and filtration systems to satisfy the odor standard contained herein. While the City does not mandate any particular equipment specifications with regard to filtration, all marijuana establishments are strongly encouraged to adopt best management practices with regard to implementing state-of-the-art technologies in mitigating marijuana odor, such as air scrubbers and charcoal filtration systems.
- Noxious gases and fumes. Marijuana establishments shall have appropriate ventilation systems to mitigate noxious gases or other fumes used or created as part of the establishment. Gases or fumes shall not extend beyond the premises of any establishment, meaning not detectable on any property that is not under the control of the establishment.
- Sufficient measures and means of preventing smoke, debris, dust, fluids and other substances from exiting a marijuana establishment shall be provided at all times.

Detailed procedures and processes as required above are outlined in the enclosed Odor Mitigation Plan.

- All marijuana and marijuana byproducts intended for disposal shall be stored indoors in a self-contained room that is intended solely for this purpose and in accordance with all applicable federal, state and local laws and regulations. When moving material from the self-contained storage room for disposal, marijuana and marijuana by-product shall be moved only in receptacles with a cover or lid. Security cameras shall be installed to record activities in the area of the storage room as well the areas between the storage room and where said material is loaded onto vehicle(s) for disposal.

Detailed waste and wastewater disposal plan is enclosed in this package. Security camera placement is demonstrated in the "Odor Mitigation an Waste Disposal Visual Representation", included in this package.

Odor Mitigation Plan

AMS Cultivation, LLC D/B/A Blossom

Specific Odor-Emitting Activities

AMS Cultivation, LLC d/b/a Blossom ("Blossom") will be a medical marijuana caregiver storefront located at 45 Boulder Way in Biddeford. Blossom will sell marijuana and marijuana products produced by state licensed medical cultivation and product manufacturing facilities as well as non-marijuana goods, such as apparel, to qualified patients 18 years of age or older. Blossom will display pre-packaged marijuana and marijuana products in glass display cases within the retail store. All inventory not displayed in display cases will be stored within the limited access, secure vault on the premises. All marijuana and marijuana products on premises will be packaged in accordance with state law.

ODOR MITIGATION PRACTICES

Blossom will uses the below described procedural and engineer controls to mitigate odor.

1. Procedural Activities

The following procedural activities will mitigate odors associated with marijuana and marijuana product:

- Blossom will only display and/or store marijuana or marijuana product that has been packaged in accordance with state law.

- Marijuana and marijuana products that are not displayed for sale will be stored in a vault (an enclosed area located within the limited access area of the premises with walls consisting of steel-reinforced concrete and a concrete roof). The vault will have a

single door that shall be closed and locked at all times, except when employees are restocking the vault or display cases.

- Display cases displaying marijuana and marijuana products shall be fully enclosed and shall be shut all times with the exception of an employee accessing marijuana or a marijuana product for a customer.

- Premises doors and windows shall be shut at all times.

Engineering Controls

Each air intake on the retail premise shall be installed with a carbon filter and inline fan. This technology is the accepted and available industry-specific best control technologies designed to effectively mitigate odors within the retail environment.

A. System Design

Blossom will utilize the VivoSun 6 Inch 440 CFM Inline Fan, 6 Inch Carbon Filter at air intake points to mitigate odors associated with storage and display of marijuana and marijuana products.

In addition, Blossom will place Ona Gel within the vault area, where there will be high concentration of packaged product. Ona Gel is a widely accepted odor neutralizer in the cannabis industry.

B. Maintenance Plan

The Manager is responsible for checking the Carbon Filter and Inline Fan(s) once a month. The Manager shall be responsible for changing filters every 9 months, or more frequently if necessary. The Manager shall record the purchases of replacement filters, the date of performed maintenance, notification and response to equipment malfunctions on an odor control maintenance forms. Completed odor control maintenance

forms shall be maintained in accordance with Blossom's record storage and retention policy.

All staff shall be trained on the importance of:

- keeping the vault and display case doors closed;
- ensuring doors and windows are closed;
- ensuring exhaust and filtration systems are running as required; and
- reporting concerns about the functioning of odor mitigation controls to the Manager.
- This training shall be part of each employee's initial training and annual refresher training. The date of all trainings and the staff who participated in the training shall be recorded by the staff person conducting the training. Training records shall be maintained in accordance with Blossom Blossom s record storage and retention policy.

Complaint Response and Tracking

Blossom will designated the General Manager as the contact for receiving odor-related complaints. The General Manager will complete a complaint report for review by the Compliance Manager. Complaint reports shall be maintained in accordance with Blossom record storage and retention policy. The Chief Executive Officer shall respond to all odor-related complaints within 24 hours of receipt of the complaint. The Compliance Manager and other appropriate management shall consider amendments to Blossom's Ventilation and Filtration Plan that processes are sufficient to mitigate odors from all odor sources.

Visual Representation of Odor Mitigation Equipment

VivoSun 6 Inch 440 CFM Inline Fan, 6 Inch Carbon Filter

Ona Gel

Solid Waste & Waste Water Disposal Plan
Blossom Cannabis

Introduction

This Solid Waste and Waste Water Disposal Plan describes AMS Cultivation d/b/a Blossom ("Blossom") processes for disposing of liquid and solid marijuana waste in compliance with the regulations including record keeping/tracking requirements, the process for rendering marijuana waste unusable and unrecognizable, and methods for storing marijuana waste prior to removal from the facility.

Record Keeping

Blossom will maintain accurate and comprehensive records that account for and reconcile all waste activity related to the disposal of marijuana and marijuana products. Any marijuana waste transferred to a producer, processor, wholesale licensee or research certificate holder will be recorded in a transaction entered into an Inventory Tracking System in accordance with state and local regulations.

Definitions

Solid Marijuana Waste: Any dried flowers and trim from mature marijuana plants.

Non-Hazardous Waste: Waste to include garbage, rubbish, refuse, special waste, or other discarded material, including solid, liquid semisolid, or contained gaseous material resulting from industrial, commercial, agricultural or other operations.

Hazardous Waste: Waste that exhibits a hazardous characteristic or is a listed waste. There are four criteria that define a characteristic waste. They are: 1. Ignitability 2. Corrosivity 3. Reactivity 4. Toxicity

There are also four categories of listed wastes. They are:

1. Non-specific sources, such as a halogenated solvent

2. Specific sources, such as bottom sludge from wastewater treatment of wood preserving processes that use creosote and/or pentachlorophenol

3. Commercial chemical products, intermediates or off-specification products. There are two lists for this category, one for acute wastes and one for non-acute wastes.

4. Polychlorinated biphenyl. (PCB's)

Employee Training

Employees will be trained on the Waste Disposal Plan within 30 days of being hired or before they are responsible for disposing of any marijuana waste, whichever comes first. The General Manger will be responsible for training employees in the Waste Management Plan and shall keep a record of all Waste Disposal Planning trainings for employees. Such records shall be maintained in accordance with Blossom's record retention policies.

Tracking

All marijuana waste disposed of by Blossom will be recorded in an Inventory Tracking System, including the date and time of disposal, the employee or manager responsible, the reason for disposal (i.e., the type of waste), the lot, batch, or plant identifier (if applicable), the manner of disposal, and the quantity.

Solid Marijuana Waste Storage and Disposal

In accordance with this Solid Waste and Waste Water Disposal Plan, Blossom shall ensure that all waste types, including marijuana waste, will be securely stored, handled, recorded, and disposed of in accordance with all applicable local and state laws and regulations.

All marijuana waste generated from normal retail activities including but not limited to adulteration or expiration, will be securely stored in the locked storage area inside the vault and under video surveillance. It will then be rendered unusable and disposed of in a manner that ensures that it cannot be reconstituted for any kind of use or benefit, as related to its psychoactive content, by an unauthorized individual or organization.

Rendering Solid Marijuana Waste Unusable

All Solid Marijuana Waste shall be rendered unusable prior to leaving the licensed premises for disposal by grinding and incorporating the marijuana waste with other ground materials so the resulting mixture is at least fifty percent non-marijuana waste by volume, including: (1) food waste; (2) yard waste; or (3) other wastes approved by the Department.

- All packaged marijuana products must be removed from their packaging and rendered unrecognizable and unusable prior to leaving the licensed premises for disposal.

- The process of rendering the Solid Marijuana Waste unusable shall occur with the limited access area of the licensed premise where surveillance cameras are permanently fixed and must occur entirely on camera.

- During the waste disposal process, the responsible employee shall input the following information into the Inventory Tracking System

- Plant, batch, or lot identifier of the marijuana to be disposed

    - Description of the marijuana waste being disposed of
    - Method of disposal
    - Confirmation that the marijuana was rendered unusable before disposal
    - Date of disposal

Blossom will establish a relationship with one or more vendors to pickup and properly dispose of Solid Marijuana Waste that has been rendered unusable.

- When moving material from the self-contained storage room for disposal, marijuana and marijuana by-product shall be moved only in receptacles with a cover or lid.

- Security cameras shall be installed to record activities in the area of the storage room as well the areas between the storage room and where said material is loaded onto vehicle(s) for disposal.

- The contracted waste management company will transport all marijuana waste from the cultivation site to a solid waste facility or landfill in compliance with local and state regulations.

<u>General Prohibitions</u>

- Blossom will strictly prohibit the placement, dumping, or disposal of trash, garbage, litter, or any other kind of waste on the property of another legal entity or any public place.

- Improper disposal of any type of waste by an employee is cause for termination, which will be clearly communicated during the training

process regarding waste.

Liquid Marijuana Waste Storage and Disposal

All liquid marijuana waste shall be solidified through means of mixing it with soil or other absorbent material and shall be disposed of according to the procedures for solid marijuana waste.

Non-Hazardous Waste Management and Disposal

Non-Hazardous Solid Waste

- Solid waste will be placed into recycling bins or trash bags within trash containers inside the facility.

- Solid wastes, including recyclables, will be stored in a manner such that they do not constitute a fire, health, or safety hazard or provide a food source or harbor for pests.

- Solid food wastes will be securely stored in covered or closed containers which are nonabsorbent, leak-proof, durable, easily cleanable, and designed for safe handling.

- During facility closing procedures, trash bags will be securely closed, and the recycling and trash bags will be transferred to secure outside waste for pick up.

- Blossom will ensure that solid wastes are collected at least once per week.

- Blossom will use a solid waste disposal vendor approved by state and/or local authorities and use the containers provided by the vendor.

- If recyclable material is not handled by the waste disposal vendor, arrangements will be made to have it transported to or picked up by a commercial recycler.

Non-Hazardous Liquid Waste

Non-hazardous liquid waste shall be disposed of in accordance with the City of Biddeford's Rules and Regulations.

Hazardous Waste Management and Disposal

As a general rule, Blossom's storefront will not generate hazardous wastes. Employees shall, however, be trained to identify hazardous waste and all hazardous wastes shall be disposed of in accordance with this plan and state and federal laws governing the discharge of hazardous waste.

- Incompatible wastes as determined by Safety Data Sheet (SDS) information will be stored in separate containers and separate storage areas.

- Lids will remain closed when not actively adding or removing waste from the container.

- Containers will be kept in good condition (e.g. free of dents, free of corrosion, no leaking, no bulging, etc.)

- Waste containers will be numbered and stored in a climate-controlled area, and will be labelled with the words "Flammable", "Toxic", "Corrosive" or "Reactive" and the word "Waste," along with a description of the contents, and EPA waste codes.

- A Chemical Waste Log will be filled out and forwarded to the Facilities Director for each waste container.

- If a waste container is to be reused or discarded, it will be triple-rinsed. Rinse water will be tested to ensure that none is discarded into the water system unless it meets regulations for direct disposal.

- Container storage areas will be inspected weekly. At a minimum, the inspection will cover leaks or staining from containers, general container condition, labeling, and management practices.

Hazardous Waste Safety

- Employees shall remain vigilant to unsafe practices and conditions in the facility and shall immediately report such practices and/or conditions to the manager.

- The manager must correct unsafe practices and or conditions promptly, or halt the operation until these can be corrected.

- Personal protective equipment will be inspected prior to use and worn as needed to avoid exposure. Gloves should be made of a material known to be resistant to permeation by the chemical in use.

Hazardous Waste Disposal

- Blossom will ensure that all hazardous waste generated at the facility will be transported and disposed of in accordance with local, state, and federal regulations.

- Hazardous waste will remain on-site for no more than 90 days before collection and transport for proper disposal.

- The Safety Data Sheet (SDS) will be consulted to determine best practices for the disposal of each waste.

- Blossom will make special handling, storage, transfer, and disposal arrangements for hazardous materials that comply with federal and state laws and regulations.

- When hazardous waste is sent to an off-site disposal facility, the Facility Director will document delivery with transportation manifests, as requited by the Office of Marijuana Policy.

Odor Mitigation & Marijiuana Waste Plan
Blossom Cannabis / 45 Boulder Way

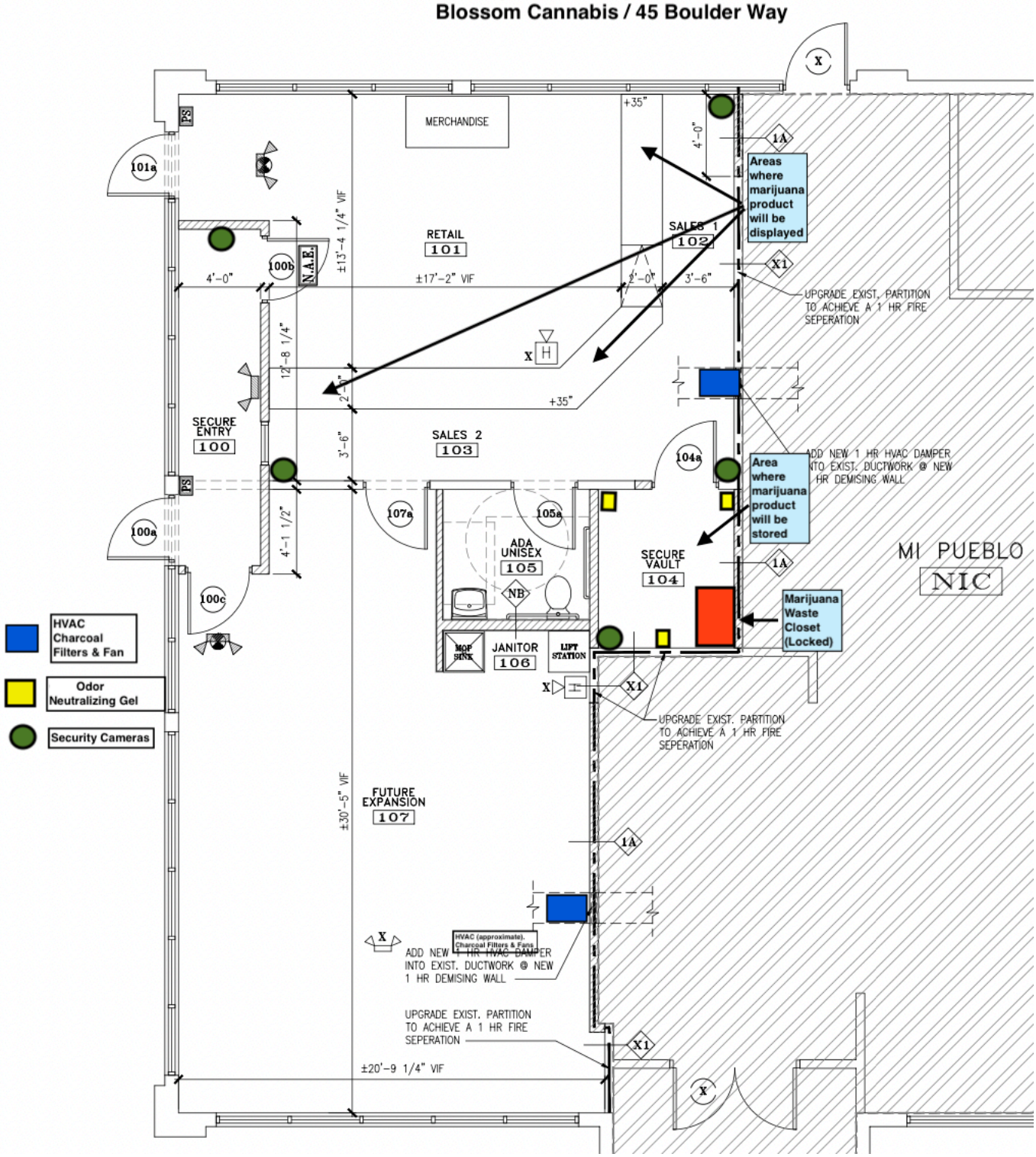

PRODUCED BY AN AUTODESK EDUCATIONAL PRODUCT

Blossom Cannabis- Biddeford

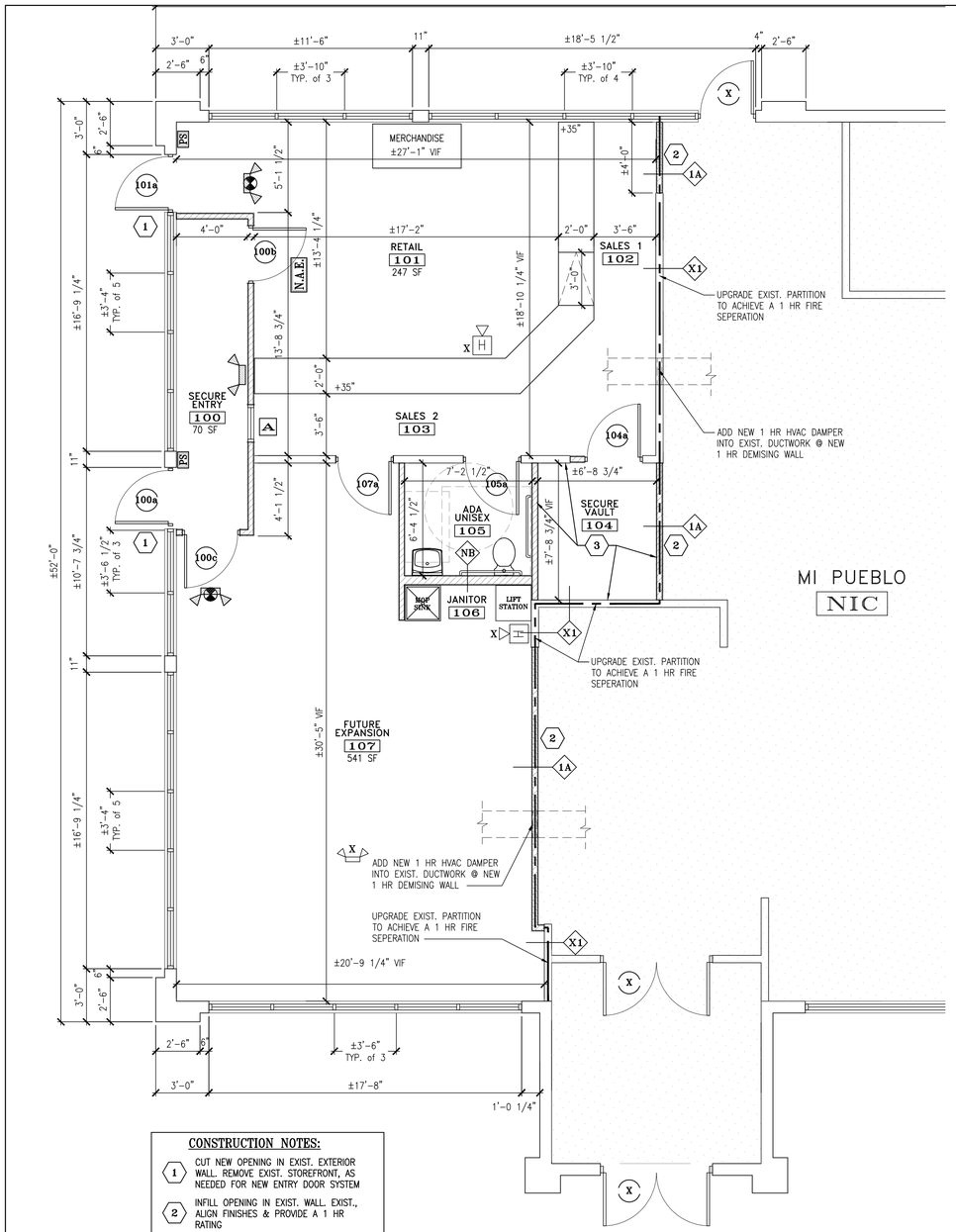

FLOOR PLAN
SCALE: 1/4" = 1'-0"

CONSTRUCTION NOTES:

1. CUT NEW OPENING IN EXIST. EXTERIOR WALL. REMOVE EXIST. STOREFRONT, AS NEEDED FOR NEW ENTRY DOOR SYSTEM
2. INFILL OPENING IN EXIST. WALL. EXIST., ALIGN FINISHES & PROVIDE A 1 HR RATING
3. PROVIDE GALV. METAL MESH ON FACE OF VAULT WALLS, UNDER GWB FINISH

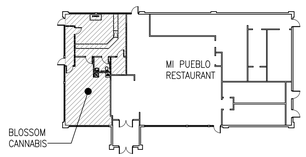

KEY PLAN
SCALE: N.T.S

ROOM FINISH SCHEDULE

Blossom – Biddeford, ME.

ROOM NO.	ROOM NAME	FLOOR	BASE	WALLS	CEILING	REMARKS
100	ENTRY VESTIBULE	VCT	4" VINYL	GWB	ACT-1	–
101	RETAIL	VCT	4" VINYL	GWB	ACT-1	–
102	SALES 1	VCT	4" VINYL	GWB	ACT-1	–
103	SALES 2	VCT	4" VINYL	GWB	ACT-1	–
104	SECURE VAULT	VCT	4" VINYL	GWB	ACT-1	–
105	ADA UNISEX	VCT	4" VINYL	GWB	ACT-1	–
106	JANITOR	VCT	4" VINYL	GWB	ACT-1	–
107	FUTURE EXPANSION	VCT	4" VINYL	GWB	ACT-1	–

DOOR SCHEDULE

Blossom – Biddeford, ME.

DOOR NO.	LOCATION	DOOR SIZE W	H	T	TYPE	MAT.	HARDWARE	REMARKS
100a	SECURE ENTRY (100)	3'-0"	7'-0"	1.75	SWING	INSUL. METAL	TTDB, CB, CL, WS	1/2 GLASS
100b	SECURE ENTRY (100)	3'-0"	7'-0"	1.5	SWING	SC WOOD	L, CL, WS	1/2 GLASS
100c	SECURE ENTRY (100)	3'-0"	7'-0"	1.5	SWING	SC WOOD	L, TTDB, CL, WS	–
101a	'EXIT ONLY' RETAIL (100)	3'-0"	7'-0"	1.75	SWING	INSUL. METAL	TTDB, CB, CL, WS	1/2 GLASS, NO EXTERIOR HARDWARE
104a	VAULT (104)	3'-0"	7'-0"	1.75	SWING	METAL 6 PNL.	L, TTDB	SECURE VAULT ACCESS
105a	ADA UNISEX (105)	3'-0"	7'-0"	1.5	SWING	SC WOOD	L, PRIVACY	–
107a	FUTURE EXPANSION (107)	3'-0"	7'-0"	1.5	SWING	SC WOOD	LLDB	SPECIAL HIDDEN ACCESS

(X) = EXISTING DOOR TO REMAIN REPAIR AND RESTORE AS NEEDED

ALL DOORS ACCESSING A 1HR RATED CORRIDOR SHALL BE RATED 1HR INCLUSIVE, PROVIDE CLOSERS

FIRE PROTECTION LEGEND

EXISTING	NEW	
FE	FE	FIRE EXTINGUISHER 10# ABC
FE-K	FE-K	FIRE EXTINGUISHER 10# K
		EXIT LIGHT
S	S	STROBE ONLY WITH CANDELLA RATING, AS NOTED
H	H	HORN STROBE WITH CANDELLA RATING, AS NOTED
		DUAL EMERGENCY LIGHT
		SINGLE EMERGENCY LIGHT
S	S	SMOKE DETECTOR (CEILING)
H	H	HEAT DETECTOR (CEILING)
F	F	COMBINATION LIGHT/EXHAUST FAN
		FIRE ALARM MASTER CONTROL PANEL
PS	PS	PULL STATION
		EXTERIOR EGRESS LIGHT
N.A.E.	N.A.E.	'NOT AN EXIT' SIGN W RAISED BRAILLE
V.A.P.	V.A.P.	VAN ACCESSIBLE

NOTES:

1. ALL EMERGENCY LIGHTS MUST BE POWERED BY BATTERY BACK-UP OR GENERATOR PER NFPA 101.
2. HVAC PER NFPA 90A
3. EMERGENCY LIGHTS TO AVERAGE 1 FOOTCANDLE AND .1 FOOTCANDLE MINIMUM.

ABBREVIATIONS:

CB	=	ADA CRASH BAR (PANIC)	MHO	=	MAGNETIC HOLD-OPEN
CL	=	DOOR CLOSER	PB	=	PUSH BAR
C.O.	=	CASED OPENING	PH	=	PEEP HOLE
DS	=	DOOR STOP	PL	=	PRIVACY ADA LEVER
KP	=	KICK PLATE	PP	=	PUSH PLATE
L	=	ADA LEVER	TTDB	=	THUMB TURN DEAD BOLT
LL	=	ADA LOCKING LEVER	VP	=	VISION PANEL
LP	=	ADA LOOP PULL	WS	=	WEATHER STRIPPING SYSTEM

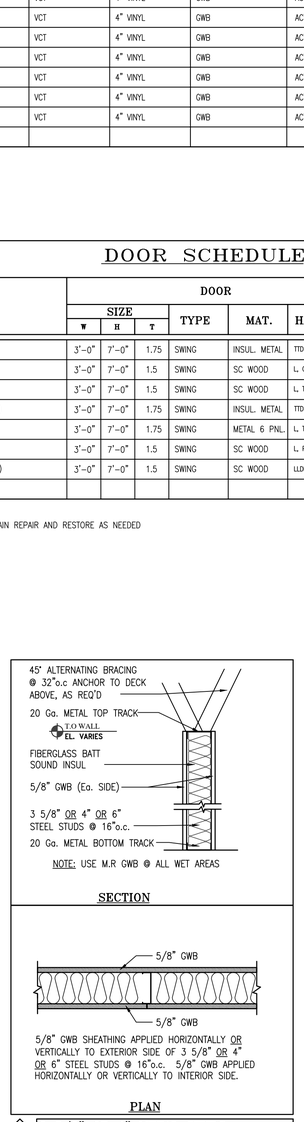

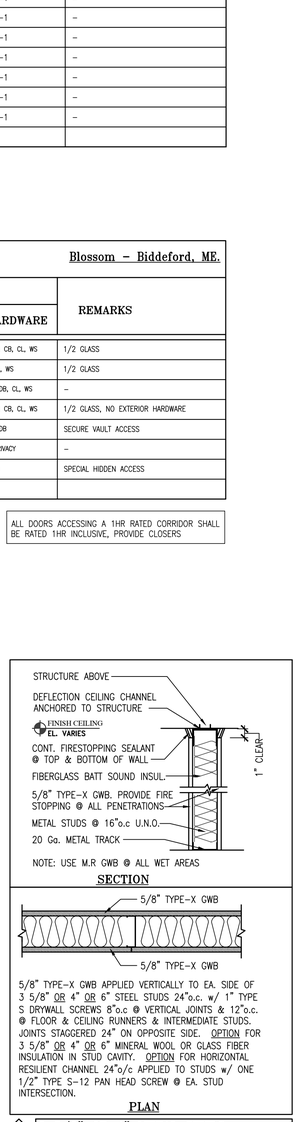

NA	3 5/8" OR 4" METAL STUDS NOT RATED
NB	6" METAL STUDS NOT RATED
1A	3 5/8" OR 4" METAL STUDS 1 HOUR WALL – UL #V438
1B	6" METAL STUDS 1 HOUR WALL – UL #V438

PARTITION TYPES:
SCALE: NTS

02-08-21

ALPHAarchitects
17 CHESTNUT STREET
PORTLAND, ME 04101
PHONE: 207.761.9500
FAX: 207.761.9595
design@alphaarchitects.com

COPYRIGHT
Reuse or reproduction of the contents of this document is not permitted without written permission of ALPHA ARCHITECTS

PRELIMINARY:
NOT FOR CONSTRUCTION

Blossom Cannabis- Biddeford
45 Boulder Way
Biddeford, ME.

JOB: 20174

ISSUE DATE	
PRELIM	12-31-20
SFMO	-
CD's	-
REV. 2	-
REV. 3	-
REV. 4	-

FLOOR PLAN & SCHEDULES

A1.1

PRODUCED BY AN AUTODESK EDUCATIONAL PRODUCT

FINDINGS OF FACT AND CONCLUSIONS OF LAW
CONDITIONAL USE PERMIT

Pursuant to the provisions of the City of Biddeford Land Development Regulations Article VII, Conditional Uses and other applicable provisions, the Biddeford Planning Board has considered the application of **Blossom Retail, LLC** , including supportive data, public hearing testimony and related materials contained in the record. Based on Public Comment and Staff's review and recommendation, the Planning Board makes the following Findings of Fact and Conclusions of Law:

Findings of Fact:

1.	Applicant:	Blossom Retail, LLC c/o David Carr, Caregiver 652 Deering Ridge Road East Waterboro, ME 04030
2.	Owner of Property:	Biddeford Plaza, LLC c/o Ray and Diane Mailhot 13 Rivers Edge Drive, Kennebunk, ME 04043
3.	Agent:	Robert Baldacci, F.O. Bailey 183 US Route 1, Falmouth, ME 04105
4.	Architect:	ALPHAarchitects 17 Chestnut Street, Suite 102 Portland, ME 04101
4.	Project Location:	45 Boulder Way (Mailhot Biddeford Plaza)
5.	Project Tax Map #/Lot #:	Tax Map 2, Lot 56
6.	Lot Size:	7.5 AC +/-
7.	Existing Zoning:	Industrial -3
8.	Overlay Zoning:	none
9.	Designations:	none
10.	Existing Use:	Commercial – Retail (restaurant)
11.	Proposed Use:	Marijuana caregiver retail store
12.	Floodplain Status:	None
13.	Approvals Required:	Conditional Use Permit
14.	Uses in the Vicinity:	Commercial – Retail (restaurant)
15.	Dimensional Requirements:	
	Min. Setback from R.O.W: 40 FT	Minimum Rear Setback: 25 FT
	Minimum Side Setback: 25 FT	Maximum Height: 6 stories / 60 FT
16.	Waivers Needed:	a. None
17.	Waivers Granted:	a. None
18.	Variances Needed for Approval:	None.

DRAFT

19.	Other Approvals Required:	Building Permits from the Biddeford Code Enforcement Office.
20.	Other Permits Obtained:	None.
21.	Other Non-City Permits Required:	Maine Office of Marijuana Policy (OMP) Retail Location Registration
22.	LDR Attachment A: Fess Paid:	Yes
23.	Application Materials Submitted: 1. Application form dated 12/7/2021. 2. Cover letter and submittal information dated 2/10/2021, (including compliance narrative, odor mitigation plan, waste disposal plan, plan exhibits and architectural rendering). Prepared by Blossom Cannabis. 3. Plan entitled: *Floor Plan and Schedules; Blossom Cannabis- Biddeford, 45 Boulder Way, Biddeford, ME.* Issue Date: 12/31/2020 (Plan Date 02-08-21). Prepared by ALPHAarchitects.	
24.	Planning Board Review History:	
	Conditional Use review and approval:	Meeting on March 3, 2021

Conclusions of Law:

The Planning Board concludes the following:

1. The proposed use meets specific requirements set forth in this ordinance, including provisions of the Land Development Regulations, Article VI Performance Standards (Sec. 77) and Article VI Conditional Use and would be in compliance with applicable state or federal laws;

2. The proposed use, with review by the Fire Department, State Fire Marshall and the issuance of a building permit would not create fire safety hazards by providing adequate access to the site, or to the buildings on the site, for emergency vehicles and would not create hazards through the storage of chemicals and wastes;

3. No new exterior lighting is proposed and the existing lighting appears would not create hazards to motorists traveling on adjacent public streets or is adequate for the safety of occupants or users of the site or would not damage the value and diminish the usability of adjacent properties;

4. The existing site includes provisions for buffers and on-site landscaping provide adequate protection to neighboring properties from detrimental or unsightly features of the development;

DRAFT

5. The proposed use, located within an existing commercial retail plaza, would not have a significant, detrimental effect on the use and peaceful enjoyment of abutting property as the result of noise, vibrations, fumes, odor, dust, glare, hours of operation, or other causes;

6. The existing parking lot is adequate in size to include provisions for vehicular loading and unloading and parking and for vehicular and pedestrian circulation on the site and onto adjacent public streets would not create hazards to public safety or traffic congestion;

7. The proposed use would generate a volume of traffic that can reasonably be accommodated by the existing road network, or would not create unreasonable traffic hazards or would not exacerbate an existing traffic hazard, or would not create unreasonable traffic congestion;

8. The proposed use, adjacent to other commercial retail uses, would not have a significant, detrimental effect on the value of adjacent properties, which could be avoided by reasonable modification of the proposal;

9. The proposed use would not have an adverse impact on the privacy of the residents of the immediate area (within 500 feet) which could be avoided by reasonable modification of the proposal.

10. The proposed use would be in compliance with Biddeford's comprehensive plan;

11. The proposed use would not have an adverse impact on the immediate neighborhood or the community relative to architectural design, scale, bulk and building height, identity and historical character, or visual integrity, which could be avoided by reasonable modification of the proposal;

12. With no site improvements proposed, the design of the site would not result in significant flood hazards or flood damage or would be in conformance with applicable flood hazard protection requirements;

13. With the existing site serviced by public water and sewer, and waste management services, adequate provision has been made for disposal of wastewater or solid waste or for the prevention of ground or surface water contamination;

14. Adequate provision has been made to control erosion or sedimentation;

15. No new site improvements are proposed and the existing site appears to allow for adequate provision to handle stormwater runoff or other drainage problems on the site; and the proposed development will not unduly burden off-site surface water systems;

DRAFT

16. The existing water supply would meet the demands of the proposed project (and for fire protection purposes, if applicable.)

17. With consideration of the submitted waste disposal plan and other state and local requirements, adequate provision has been made for the transportation, storage, and disposal of hazardous substances and materials as defined by state law;

18. The proposed use would not have an adverse impact on scenic vistas, historic sites, archeological resources, or on significant wildlife habitat or wetland areas and water bodies, which could be avoided by reasonable modification of the proposal;

Determination:

Based on the evidence available and the conclusions above, the Biddeford Planning Board approves the application with the following conditions:

Conditions of Approval:

1. **Standard Conditions of Approval apply.**
2. **The applicant shall obtain all other pertinent local, state and federal permits/licenses/insurance such as building, electrical, plumbing, etc., prior to commencing business.**
3. **The applicant shall comply with Land Development Regulations, Article VI (Performance Standards), Section 77 (Marijuana establishments) including, but not limited to, the odor of marijuana shall not be detectable off-premises, meaning not-detectable on nay property that is not under control of the establishment.**

_____
Planning Board Chairman

_____
Date

DRAFT

PLANNING BOARD REPORT

February 25, 2021

Biddeford Planning Board
Greg Tansley, City Planner
City of Biddeford
205 Main Street
Biddeford, Maine 04005

Application: 1 Gooch Street Redevelopment – Tom Watson & Co., LLC
(Tax Map 40 Lot 56)
Site Plan/Subdivision Sketch Plan Review
Review Status: New application.

Board members and Mr. Tansley,

The following application information has been provided for review:

1. Application form dated 1/27/2021.
2. Cover letter and submittal application information dated 2/3/2021, prepared by Acorn Engineering, Inc.
3. Engineering Plan set entitled: *1 Gooch Street Redevelopment, Tom Watson & Co., Biddeford, Maine.* Issue Date: 2/3/2021. Prepared by Acorn Engineering, Inc.
4. Architectural Elevations and Floor Plan entitled: *Mixed Use Building, Biddeford, Maine.* Dated 12/18/2020. Prepared by Ryan Senatore Architecture.

With review of the above information and the Land Development Regulations, I offer the following comments on compliance with the City's ordinances.

PROJECT DESCRIPTION

The project site, located in the MSRD-3 Zone and the General District Shoreland Overlay Zone, is an existing six story brick building that is currently vacant and overlooks the Saco River in the vicinity of Route 1 (Elm Street) and Springs Island. The proposal includes building renovations that aim to maintain its historic character and accommodate 320 self-storage units (first two floors) and 96 dwelling units (top four floors). Site improvements include parking and walkway to Elm Street.

COMPLETENESS REVIEW

The application is before the Planning Board as required by Article XI (Site Plan Review) of the Land Development Regulations and Chapter 66 (Subdivisions) subject to Site Plan and Subdivision review and approval. Per the City's Subdivision ordinance (66-26), all applications have a three tier approval process beginning with a Sketch plan review.

The applicant has prepared and submitted information that is more than adequate for a Sketch Plan review. With an eye on the preliminary plan review and considering the scale of the proposal and that it is subject to both site plan and subdivision standards and requirements, it would be helpful for the applicant to provide a narrative(s) that address how the application conforms to the various applicable standards.

REVIEW PROCESS

The Planning Board and City Planner may consider the process moving forward since this application is subject to both subdivision and site plan. Per Section 66-4(b) the Planning Board, at its discretion, may decide to use the Site Plan Review procedures for application review instead of what is required under Chapter 66. The Board may want to determine this prior to the next application submission. Whatever the process, the application is subject to all applicable site plan and subdivision standards. The primary difference is that under Chapter 66 there is a preliminary and a final plan review and approval, while under Site Plan there is only a final plan review. Both options begin with a Sketch/Concept plan review.

COMPLIANCE WITH THE CITY'S ORDINANCES

When considering the review at this point is intended by the process to be general in nature, the applicant should take the opportunity to introduce the project and the Board should ask questions and provide feedback. The following are comments that Board and the applicant may consider in the discussion:

1. Status of Gooch Street. On the surveys it is referenced as former. In the application it is referenced as a private street and ROW. Is it the intent of the regulatory review to have approved as a private Street?
2. Landscape Design. Considering the scale of the proposed development the eleven trees and lawn planned for seems to be lacking given the hundreds of visitors and residents coming and going. A more varied landscape design, low maintenance flowering perennials with limited shrubs, would help to provide a more interesting and attractive landscape throughout the year.

3. Open space. Per Section 5 Site design and development criteria, Open space is to be provided in a ratio of 1,000 SF per dwelling unit. The applicant should address if the site will accommodate some manner of open space for the residents.
4. Transit Connection. Will the site design accommodate city transit in some manner? Shelter and/or stop?
5. Lighting. The applicant references lighting in the application material submitted, however, the rendering provided appears to reflect fixtures that would not be considered cut/offs or dark-sky compliant.
6. Parking spaces required. Per Section 5 Site design and development criteria, parking for multifamily developments should be increased by 5 percent to allow for visitors.
7. Parking lot design. The proposed layout of the parking spaces includes a combination of angled and perpendicular parking. This doesn't seem appropriate, likely resulting in difficulty accessing the 90º spaces from only a 16-1/2 foot wide aisle when 24 feet is the standard. The applicant should review Table 6-49B for parking design details.
8. Self-storage facilities are a conditional use in the MSRD-3 zone. The applicant, in the preliminary plan review submission, should address the criteria in Article VII (Conditional Use) and Section 60, Article VI (Performance Standards).

WAIVER REQUESTS

None requested. The applicant should review compliance with standards and provide a list of those standards they seek a waiver from along with a rationale for the Board to grant it.

CONCLUSION

The submitted application provides a great amount of information for the Board to comment on and ask questions about to familiarize themselves with the project. Depending on the review process the Board determines to follow, the Planning Board, after it has completed the conceptual review and provided feedback to the applicant, can consider voting to approve/approve with conditions the sketch plan application (per Sec.3.C.4.A under Procedure for Site Development) or direct the applicant to prepare and submit a preliminary plan application (per Sec. 66-35 through 66-38).

Feel free to contact me with questions.

Best regards,

Christopher Di Matteo
City of Biddeford Contract Planner.
cdimatteo@longmeadowpla.com
207.604.4245

PRELIMINARY SUBDIVISION & SITE PLAN APPLICATION

1 GOOCH STREET REDEVELOPMENT

CITY OF BIDDEFORD, ME

Prepared By:

ACORN ENGINEERING, INC.

For:

TOM WATSON & CO.

FEBRUARY, 2021

A C O R N Engineering, Inc. • www.acorn-engineering.com
207-775-2655 • PO Box 3372 • Portland • Maine • 04104

ACORN ENGINEERING, INC.

Planning Board & Planning Department
Attn: Mr. Greg Tansley & Chris Di Matteo
City of Biddeford, Maine
205 Main Street
Biddeford, ME 04005

February 3, 2021

Subject: Preliminary Subdivision / Sketch Site Plan Application
Redevelopment of 1 Gooch Street, Biddeford

Members of the Board, Mr. Tansley & Mr. Di Matteo:

On behalf of Tom Watson & Co., we are pleased to submit the accompanying package of submission materials related to the proposed redevelopment at 1 Gooch Street (previously 59 Elm Street). The parcel is mapped as Map: 40, Block: 56 and is located in the Main Street Revitalization District – High Density / Mixed-Use (MSRD-3), General Development (G-1) Shoreland Overlay Zoning Districts. The project proposes to repurpose the existing building at 1 Gooch Street to include 320 self-storage units on the ground and second floor level with 96 residential units within the top existing 4 floors. The self-storage and residential housing will be supported by 106 parking spaces to the rear of existing building and railroad tracks. Additional maintenance improvements are proposed along the private Gooch Street, including formalizing travel ways and utility upgrades.

The redeveloped building will consist of:

- Residential Units = 96 units (97,432 SF – All Levels)
    - (80) – 1 Bedroom Units
    - (16) – 2 Bedroom Units
- 320 Storage Units (43,564 SF – 2 Levels)

Overall, this project aims to utilize the existing building with historical value while providing much needed housing stock. The existing "use" of the building has been primarily storage and confirmed with the Code Enforcement Officer that continued "storage" use with self-storage units would be appropriate. The site will be enhanced by increasing the green space and parking count. The team's vision for this site is to foster a community-based space for living adjacent to the scenic river. One of many redevelopments within the Mill district, this project will further increase the activity within the City's flourishing downtown while maintaining the character and charm of these historic buildings.

We would respectively request the Preliminary Subdivision Application be placed on the March 3, 2021 Planning Board meeting.

If you have any questions regarding these materials or the completeness of the application materials, please do not hesitate to contact us.

Sincerely,

William H. Savage, P.E.
Principal
Acorn Engineering, Inc.

Peter Heil P.E.
Project Manager
Acorn Engineering, Inc.

TABLE OF CONTENTS

EXHIBIT #	TITLE
1.	RIGHT, TITLE, OR INTEREST
2.	DECLARATION OF EASEMENTS, COVENANTS, AND RESTRICTIONS
3.	FINANCIAL & TECHNICAL CAPACITY
4.	STORMWATER MANAGEMENT REPORT
5.	EROSION & SEDIMENTATION CONTROL REPORT
6.	TRAFFIC OVERVIEW
7.	UTILITY SUMMARY
8.	PUBLIC SAFETY LETTER OF APPROVAL REQUESTS
9.	LIGHTING
10.	SOLID WASTE
11.	PHOTOGRAPHS
12.	VICINITY MAP

LIST OF DRAWINGS

C-01	COVER SHEET & LEGEND
C-02	GENERAL NOTES
EX-1	ALTA/NPS LAND TITLE SURVEY – BY OWEN HASKELL, INC.
EX-2	ALTA/NPS LAND TITLE SURVEY – BY NORTHEAST CIVIL SOLUTIONS
EX-3	LOT SPLIT PLAN – BY NORTHEAST CIVIL SOLUTIONS
C-03	CONSTRUCTION MANAGEMENT / E&SC PLAN
C-10	SITE & LANDSCAPE PLAN
C-20	UTILITY PLAN
C-30	GRADING & DRAINAGE PLAN
C-40	SITE DETAILS – 1
C-41	SITE DETAILS – 2
C-42	UTILITY DETAILS - 1
C-43	UTILITY DETAILS - 2
C-44	DRAINAGE DETAILS
C-45	DRAINAGE & EROSION & SEDIMENTATION CONTROL NOTES & DETAILS
	ARCHITECTURAL ELEVATIONS
A-1-1 – 1-7	PROPOSED FLOOR PLANS

CITY OF BIDDEFORD, MAINE
PLANNING BOARD

P.O. Box 586, 205 Main Street Biddeford, Maine 04005
207-284-9115

APPLICATION FORM

Type of Application:

[X] Shoreland Zoning Permit [X] Site Plan Review [ ] Extraction
[ ] Conditional Use Permit [X] Subdivision [X] Private Way
[ ] Other: _____

Applicant Information:

Applicant's Name: Tom Watson & Co.
Applicant's Mailing Address: 82 Hanover Street, Portland, ME 04101
Applicant's Telephone: 207-699-2219
What is Applicant's legal interest in the property?
[X] Owner [ ] Potential Buyer with Contract [ ] Lease/Rental Agreement

Owner's Name: Same as Applicant
Owner's Address: Same as Applicant
Owner's Telephone: Same as Applicant

Agent's Name: Acorn Engineering - Peter F. Heil, PE, CPESC
Agent's Address: 65 Hanover Street Portland, ME 04101
Telephone: (207)-775-2655

Engineer/Surveyor: Acorn Engineering / Owen Haskell
Engineer/Surveyor's Address: 65 Hanover Street Portland, ME 04101/390 U.S. Rt 1. Unit #10 Falmouth, ME 04105
Telephone: (207)-775-2655/(207)-774-0424

Project Location and Lot Information:

Street Address: 1 Gooch Street Biddeford, ME
Tax Map: 40 Lot: 56
Current Zoning: MSRD3 Shoreland Zoning: Yes

Size of lot: 2.56 [X] acres [ ] s.f. Lot Frontage: 120' - Elm Street 745' - Gooch Street

Existing Use of Property:

Existing vacant 5-story structure

Property currently serviced by:

- [ ] City Road
- [X] Private Road
- [X] Public Sewer
- [ ] Septic System
- [X] Public Water
- [ ] Private Well
- [ ] Public Trash
- [ ] Private Hauler

Slope Conditions in Area of Construction (if applicable):

[X] Flat (0-3 % slope) [X] Rolling (3-8% slope) [ ] Hilly (8-15% slope) [ ] Steep (15% + slope)

Are there any wetlands or waterbodies on the site? [ ] Yes [X] No If yes, attach information

Do you plan to bring fill onto the lot? [ ] Yes [X] No If yes, attach information

Description of proposed use of property:

Project/Proposed Use Description:

The project proposes to redevelop the existing structure to include 320 self-storage units on the ground and second floor level with 96 residential units within the top 4 floors. Additional site & utility improvements are proposed, including a surface parking area.

Property to be serviced by:

- [ ] City Road
- [X] Private Road
- [X] Public Sewer
- [ ] Septic System
- [X] Public Water
- [ ] Private Well
- [ ] Public Trash
- [X] Private Hauler

Is this project part of a larger project? [ ] Yes [X] No

☒ If in a Shoreland Zone:

Percent of residential lot coverage (Max. 20%): 96.4% existing / 83% proposed

Percent of structure expansion (Max. 30%): 0.1%

☒ If Subdivision Review, number of lots proposed: 1 Lot with 96 Units

☐ If a Private Way is proposed, number of lots served: Existing Gooch Street Private Way

☒ **If Site Plan Review, you must provide the following information:**

Total new square feet footprint of structures: 174 SF

Total new square feet paving/parking: Net: -15,835 SF

Waiver Requests (attach details):

1. _____
2. _____
3. _____
4. _____
5. _____

Attachments:

A. Letters of Approval

- ☐ Fire Department - Contact Chief or Deputy Chief - 282-9986
- ☐ Ability to Serve for Water Service – Maine Water - 282-1543
- ☐ Ability to Serve for Sewer Service- Engineering Dept (Sewer) - Tom Milligan 284-9118
- ☐ Police Department - E-911 Road Name Designation - Contact Joanne Fisk - 282-5127

B. Letter to Planning Board describing project, waiver requests, proposed improvements, addressing permit requirements, etc.

C. Photographs of site.

D. Architectural renderings/drawings of proposed buildings, as required.

E. Engineered Plans, as required.

Fees (due at time of application):

Refer to "Attachment A Fees and Charges" of the Land Development Regulations for more information. Consult with Planning Staff if you have questions.

Required Signatures:

By signing this application, as the foresaid applicant or authorized agent:

- I certify that I have read and completely understand the application;
- I certify that the information contained in this application and it's attachments are true and correct;
- I understand that all information provided on this form and all other documents submitted as part of my proposal is a matter of public record;
- I understand that copies of this information may be supplied upon request to an interested party.
- I understand that additional funds may be required through the course of review for special studies, legal review costs, and/or engineering review.
- I understand that by submitting this application I am not guaranteed a place on any particular agenda. I further understand that the City Planner will place me on an agenda for review when the application is deemed substantially complete.

[X] Project proposed to have 1 acre or more of site disturbance:

-Project may need to apply for a Maine Construction General Permit and shall comply with the requirements of DEP Chapter 500 Stormwater Regulations, as they apply.

Signature of applicant: _____ Date: 1-27-21

Signature of owner of property: _____ Date: 1-27-21

IF PLAN APPROVAL IS ANTICIPATED, PROVIDE 2 FULL SIZE MYLARS & 2 FULL SIZE PAPER COPIES FOR BOARD SIGNATURE (AS APPLICABLE). CHECK WITH PLANNING STAFF FOR CLARIFICATION.

CHECKLIST FOR *SITE PLAN* REQUIREMENTS

YES	NO	
☒	☐	Be on sheet size of 24 by 36 inches.
☒	☐	The scale of said plan shall be not less than one inch equals 50 feet and shall be indicated on the plat by use of a bar scale.
☒	☐	The plan shall bear the date, title, north point.
☒	☐	The plan shall contain a location or vicinity sketch (suggested scale one inch equals 800 feet).
☒	☐	The plan shall contain the name and address of the developer and applicant.
☒	☐	All appropriate dimensional requirements.
☒	☐	Existing and proposed easements.
☒	☐	Plan of the site showing existing watercourses and water bodies, seasonal wet areas.
☒	☐	Plan of the site showing soil type and location of test borings.
☒	☐	Location of all existing and proposed utilities.
☒	☐	Topographic contours (every five percent for zero to three percent slope; or every two feet for steeper areas).
☒	☐	Plan should include preservation and supplementation of existing dominant vegetation.
☒	☐	Plan shall indicate which features are to be retained and which are to be removed or altered.
☒	☐	Location of stonewalls, graveyards, fences, stands of trees, and other important unique natural areas and site features, including but not limited to floodplains, deer wintering areas, significant wildlife habitats, fisheries, scenic areas, habitat for rare and endangered plants and animals, unique natural communities and natural areas, sand and gravel aquifers, and historic and/or archaeological resources, together with description of such features.
☒	☐	Plan view of all buildings with their use, size, location, and first-floor elevation in respect to grade.
☒	☐	Standard elevation view of existing and proposed buildings or structures on-site.

YES	NO	
☒	☐	Outline of any buildings located within 200 feet of such existing or proposed buildings or structures indicating their shape, size, location, heights and volume.
☒	☐	Existing use of abutting properties shall be identified with approximate location of any structures thereon including access roads.
☒	☐	Location, width, curbing, and paving of access ways, egress ways, and streets within the site for both pedestrian and vehicular use.
☒	☐	The location of off-street parking and loading spaces with a layout of the parking indicated.
☒	☐	The size and proposed location of water mains and sanitary sewerage facilities will all necessary engineering data.
☒	☐	The size and location of all other existing and proposed public service connections including, without limitation, gas lines, power lines, telephone lines, and fire alarm connections and locations, indicating whether above or below ground.
☐	☐	The type, nature, and composition of all solid, liquid, and gaseous waste, industrial or otherwise, and the location, type, and design criteria of the storage and disposal facilities dealing with such waste.
☒	☐	A landscape plan and open space areas indicating grade change, vegetation to be preserved, new plantings used to stabilize areas of cut and fill, screening; plus size, location, purpose and type of vegetation.
☒	☐	A drainage plan including location, elevation, layout of catch basins and other surface and subsurface drainage features.
☐	☒	Location, size and design of proposed signs and other advertising or instructional devices.
☒	☐	Existing and proposed contours and finished grade elevations as well as the type, extent, and location of existing and proposed landscaping and open space areas which will be retained.
☒	☐	Location and type of lighting for outdoor facilities.
☒	☐	Lines of existing and proposed abutting streets showing width.
☒	☐	Surveyed property lines showing their bearing and distances and monument locations.
☒	☐	If subdivision is involved, the lines and names of all proposed streets, lanes, ways, or easements intended to be dedicated for public or private use.

YES	NO	
☒	☐	Provide copies of any covenants or restrictions that are intended to cover all or part of the land area to be developed.
☒	☐	Indicate limits of the wetland areas on the property.
☐	☒	Delineate existing zoning boundaries within 1,000 feet of the site.
☒	☐	Stamp and signature of either a Maine licensed land surveyor, professional engineer, or architect responsible for said plan.
☐	☐	Any other exhibits or data deemed necessary by the Planning Board to evaluate the proposed development for site plan review purposes.

Tom Watson & Co.

January 28, 2021

Biddeford Planning Board
205 Main Street
Biddeford, ME 04004

To whom it may concern;

I grant Will Savage and Peter Heil of Acorn Engineering Inc. authority to sign on behalf of Saco-Lowell, LLC (1 Gooch Street) for all matters pertaining to planning board approval. Thank you.

Sincerely,

John Laliberte
Vice President of Tom Watson & Co., It's Manager

188 State Street, Suite 303, Portland, ME 04101 • Phone: 207-590-2029 • john@bushwatson.com

MIXED USE BUILDING
BIDDEFORD, MAINE

DECEMBER 18, 2020

COLOR 1	OFF-WHITE - MATCH CONCRETE
COLOR 2	MEDIUM GRAY
COLOR 3	WHITE

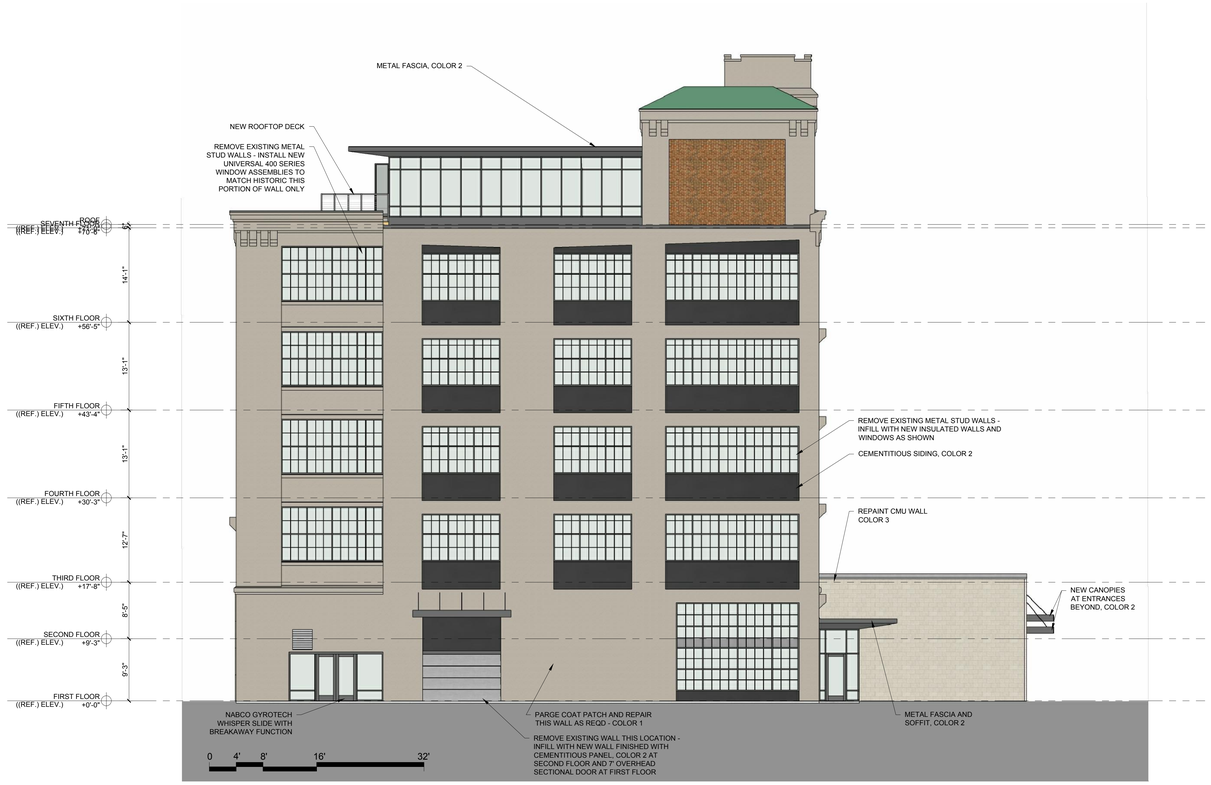

2 EAST ELEVATION
1/8" = 1'-0"

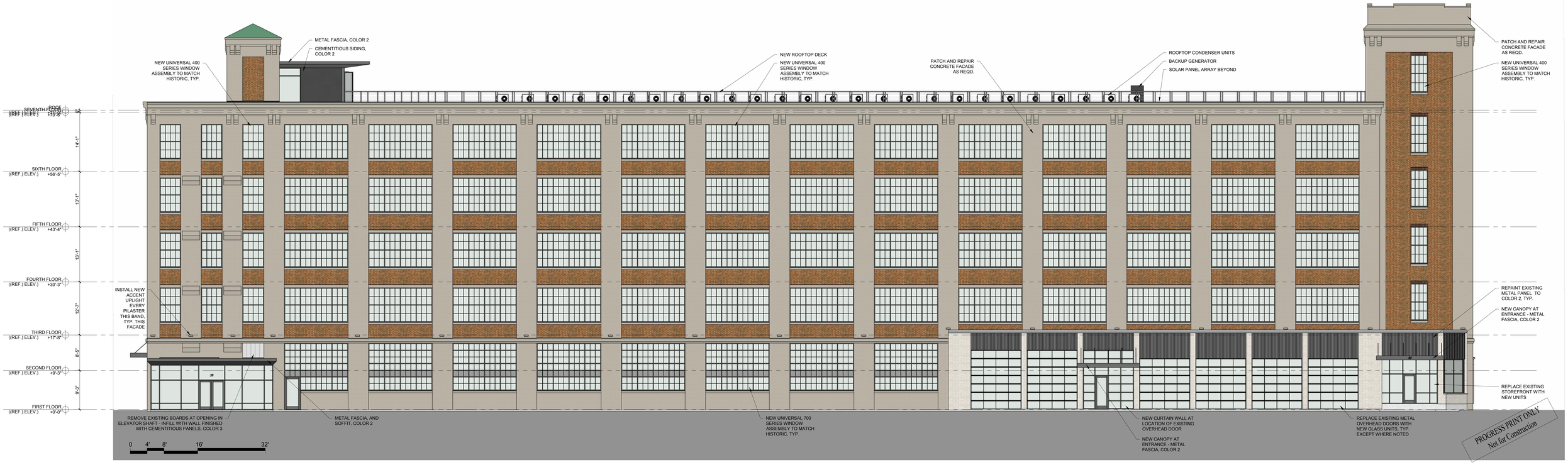

1 NORTH ELEVATION
1/8" = 1'-0"

RYAN SENATORE **ARCHITECTURE**

MIXED USE BUILDING
BIDDEFORD, MAINE

DECEMBER 18, 2020

COLOR 1	OFF-WHITE - MATCH CONCRETE
COLOR 2	MEDIUM GRAY
COLOR 3	WHITE

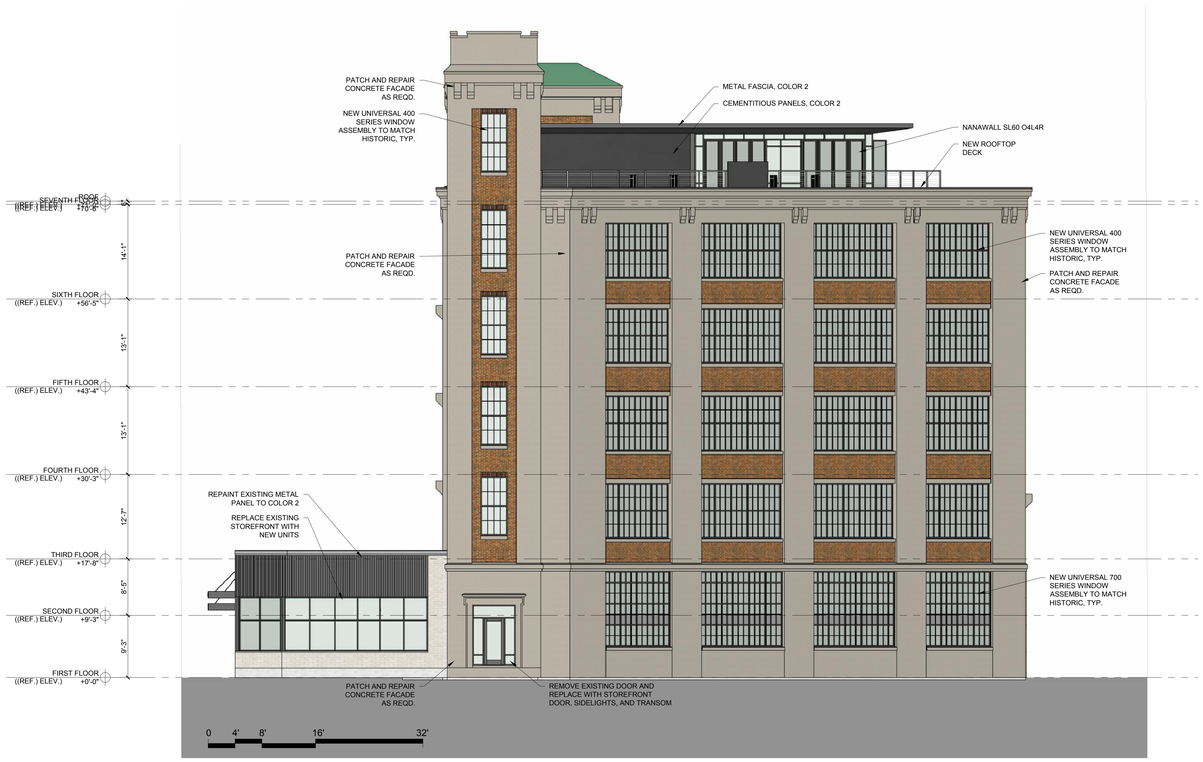

2 WEST ELEVATION
1/8" = 1'-0"

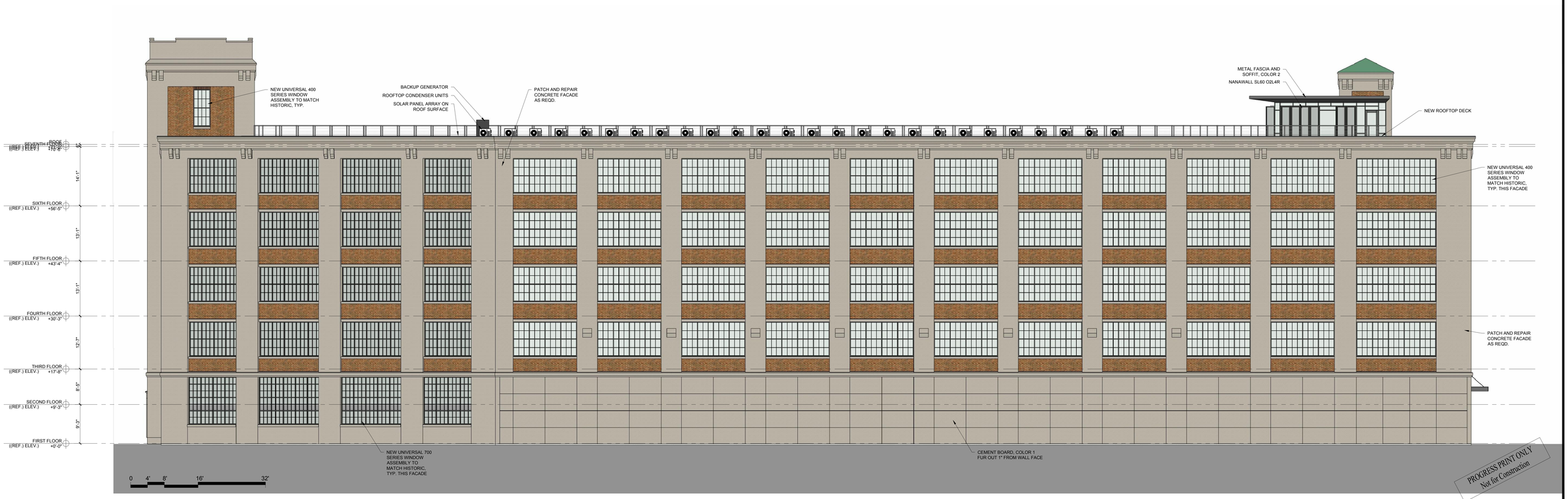

1 SOUTH ELEVATION
1/8" = 1'-0"

PROGRESS PRINT ONLY
Not for Construction

RYAN SENATORE **ARCHITECTURE**

MIXED USE BUILDING
BIDDEFORD, MAINE

DECEMBER 18, 2020

5 SOUTHWEST QUARTER - FROM ELM ST.
NTS

4 NORTHWEST QUARTER - FROM ELM ST.
NTS

3 NORTHEAST QUARTER - FROM GOOCH ST.
NTS

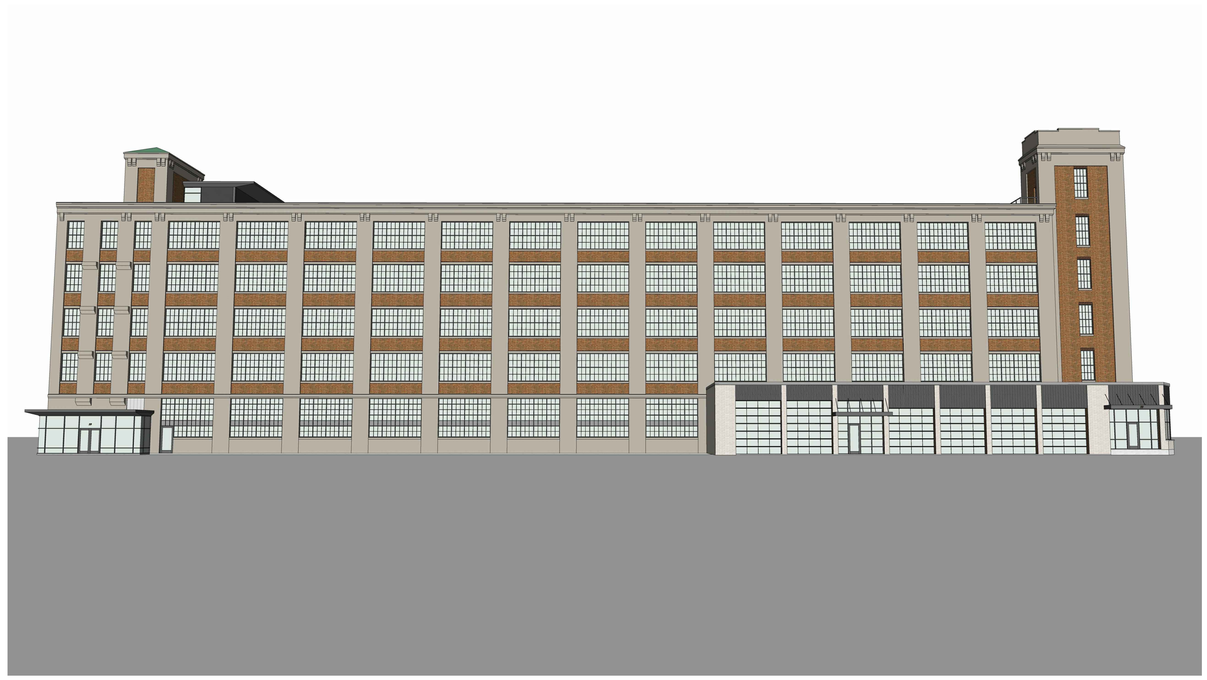

2 NORTH FACADE - FROM GOOCH ST.
NTS

1 OVERHEAD VIEW
NTS

PROGRESS PRINT ONLY
Not for Construction

RYAN SENATORE **ARCHITECTURE**

MIXED USE BUILDING
BIDDEFORD, MAINE

DECEMBER 18, 2020

1 SIGHT LINE STUDY LOCATIONS - DOWNHILL FROM PEARL ST.

1 SIGHT LINE STUDY - FROM BENEATH RAILROAD OVERPASS ON ELM ST.

1 SIGHT LINE STUDY - FROM NORTH OF BUILDING AT EDGE OF RIVER

3 SIGHT LINE STUDY - FROM 466' EAST OF BULDING APX.

2 SIGHT LINE STUDY - FROM 180' EAST OF BULDING APX.

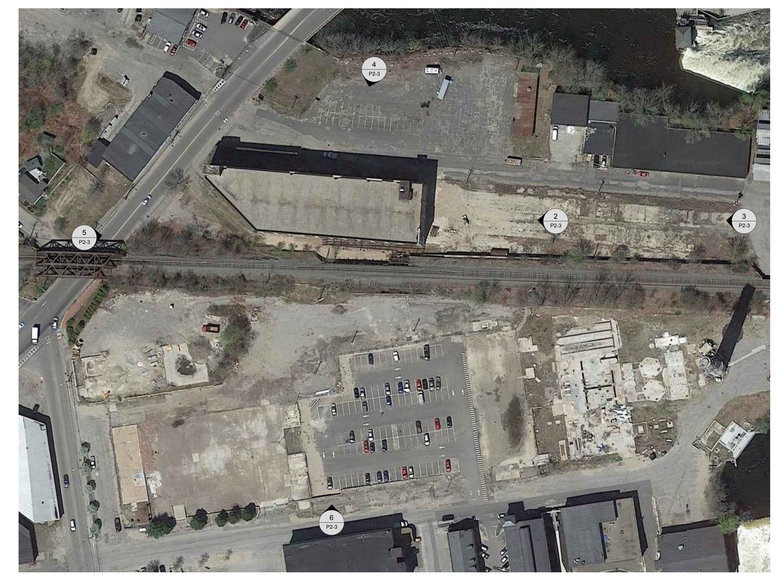

1 SIGHT LINE STUDY LOCATIONS

PROGRESS PRINT ONLY
Not for Construction

RYAN SENATORE **ARCHITECTURE**

UNIT TABULATION				
FLOOR	STUDIO UNIT	1 BED UNIT	1 BED + OFFICE UNIT	2 BED UNIT
THIRD FLOOR	1	12	7	4
FOURTH FLOOR	1	12	7	4
FIFTH FLOOR	1	12	7	4
SIXTH FLOOR	1	12	7	4
TOTALS	4	48	28	16
TOTAL UNIT COUNT				**96**

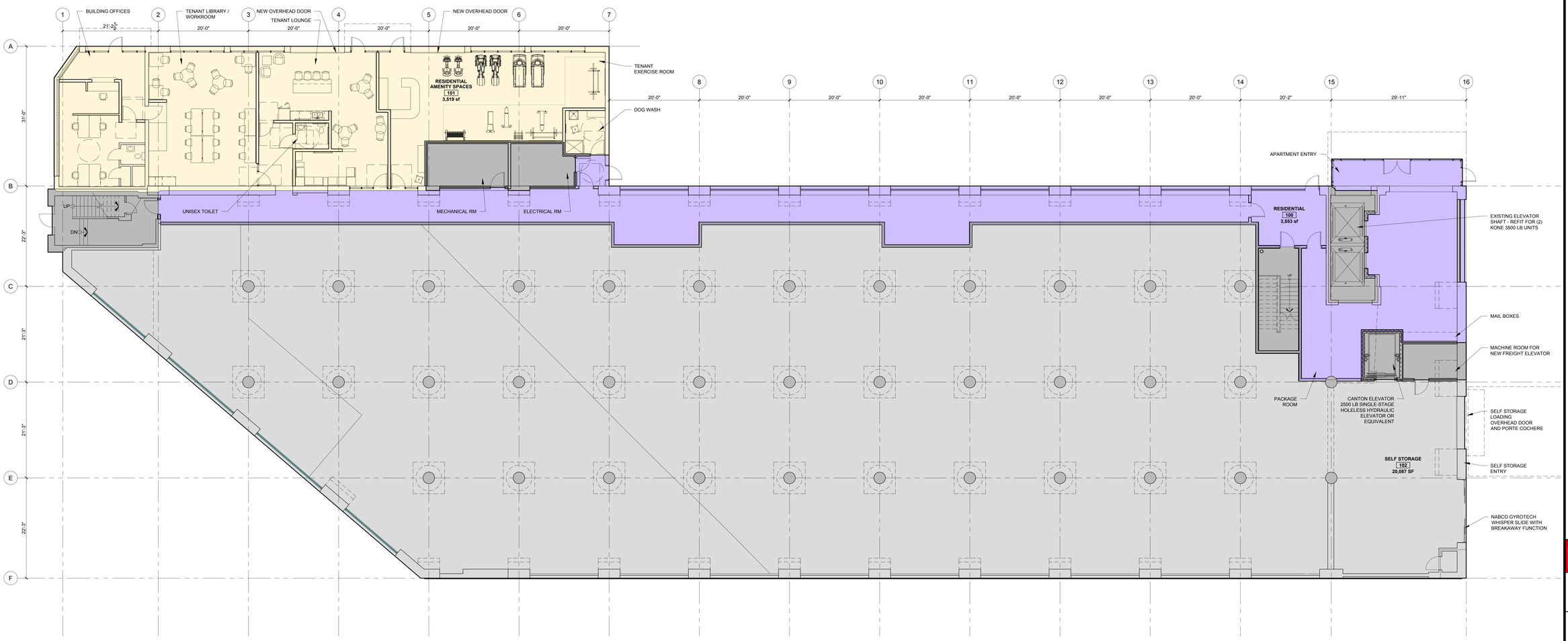

FLOOR PLATE 28,209 sf

SQUARE FOOTAGES ARE MEASURED TO OUTSIDE FACE OF EXTERIOR WALLS AND CENTERLINE OF SHARED WALLS

TRUE NORTH / GRID NORTH

0 4' 8' 16' 32'

1 FIRST FLOOR PLAN
1/8" = 1'-0"

© 2020 RYAN SENATORE ARCHITECTURE

MIXED USE BUILDING

59 ELM STREET
BIDDEFORD, MAINE

RSA
RYAN SENATORE
ARCHITECTURE
500 CONGRESS STREET
PORTLAND, MAINE 04101
207-747-5159
senatorearchitecture.com

CONSULTANTS:

REVISIONS:

PROGRESS PRINT ONLY
Not for Construction
01-19-21

DATE:

PROJECT No.	2062
DRAWN BY:	RJS, ES
CHECKED BY:	RJS
SCALE:	AS NOTED

SHEET TITLE:
FIRST FLOOR PLAN

A1-1

UNIT TABULATION

FLOOR	STUDIO UNIT	1 BED UNIT	1 BED + OFFICE UNIT	2 BED UNIT
THIRD FLOOR	1	12	7	4
FOURTH FLOOR	1	12	7	4
FIFTH FLOOR	1	12	7	4
SIXTH FLOOR	1	12	7	4
TOTALS	4	48	28	16
TOTAL UNIT COUNT				**96**

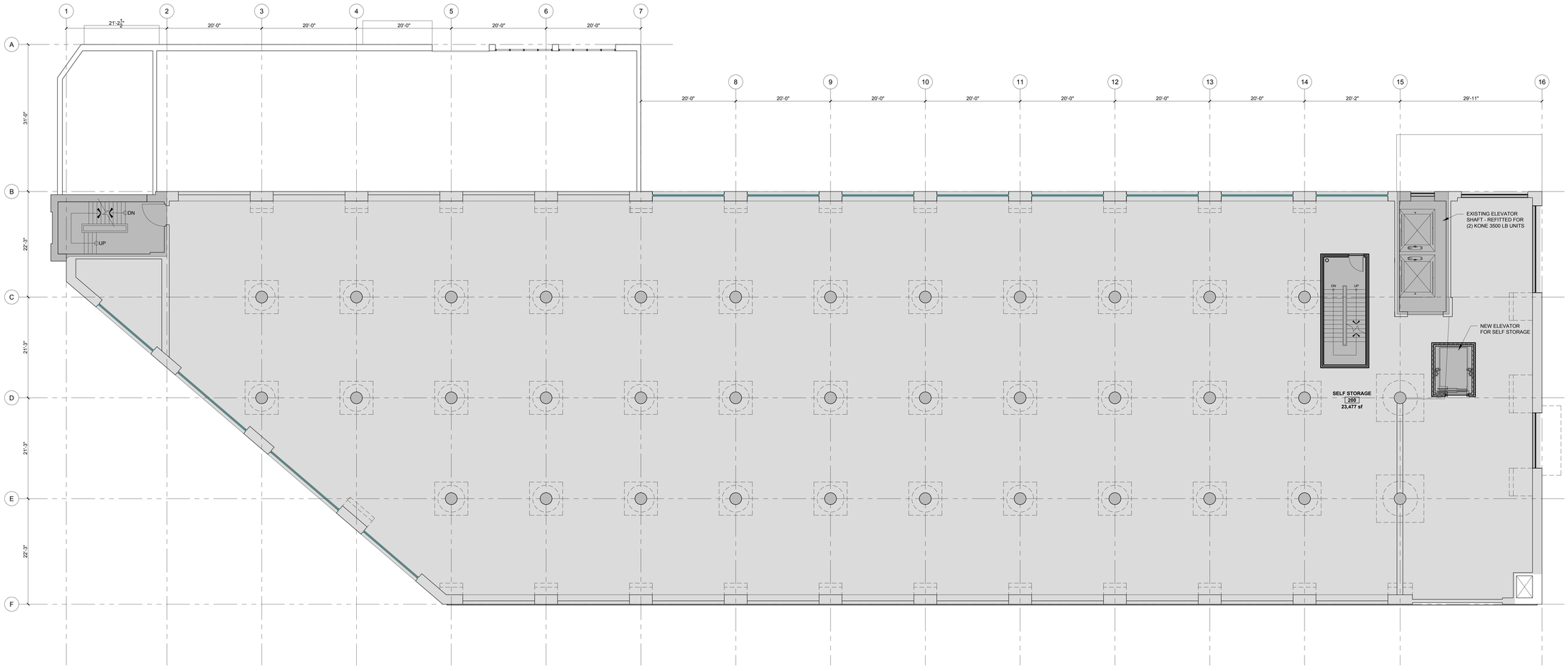

FLOOR PLATE 24,358 sf

SQUARE FOOTAGES ARE MEASURED TO OUTSIDE FACE OF EXTERIOR WALLS AND CENTERLINE OF SHARED WALLS

0 4' 8' 16' 32'

1 SECOND FLOOR PLAN
1/8" = 1'-0"

© 2020 RYAN SENATORE ARCHITECTURE

MIXED USE BUILDING

59 ELM STREET
BIDDEFORD, MAINE

RSA
RYAN SENATORE
ARCHITECTURE
500 CONGRESS STREET
PORTLAND, MAINE 04101
207-747-5159
senatorearchitecture.com

CONSULTANTS:

REVISIONS:

PROGRESS PRINT ONLY
Not for Construction
01-19-21

DATE:

PROJECT No.	2062
DRAWN BY:	RJS, ES
CHECKED BY:	RJS
SCALE:	AS NOTED

SHEET TITLE:
SECOND FLOOR PLAN

A1-2

UNIT TABULATION

FLOOR	STUDIO UNIT	1 BED UNIT	1 BED + OFFICE UNIT	2 BED UNIT
THIRD FLOOR	1	12	7	4
FOURTH FLOOR	1	12	7	4
FIFTH FLOOR	1	12	7	4
SIXTH FLOOR	1	12	7	4
TOTALS	4	48	28	16
TOTAL UNIT COUNT				**96**

FLOOR PLATE 24,358 sf

SQUARE FOOTAGES ARE MEASURED TO OUTSIDE FACE OF EXTERIOR WALLS AND CENTERLINE OF SHARED WALLS

0 4' 8' 16' 32'

THIRD FLOOR

1 THIRD FLOOR PLAN
1/8" = 1'-0"

© 2020 RYAN SENATORE ARCHITECTURE

MIXED USE BUILDING

59 ELM STREET
BIDDEFORD, MAINE

RSA
RYAN SENATORE
ARCHITECTURE
500 CONGRESS STREET
PORTLAND, MAINE 04101
207-747-5159
senatorearchitecture.com

CONSULTANTS:

REVISIONS:

PROGRESS PRINT ONLY
Not for Construction
01-19-21

DATE:

PROJECT No.	2062
DRAWN BY:	RJS, ES
CHECKED BY:	RJS
SCALE:	AS NOTED

SHEET TITLE:
THIRD FLOOR PLAN

A1-3

UNIT TABULATION

FLOOR	STUDIO UNIT	1 BED UNIT	1 BED + OFFICE UNIT	2 BED UNIT
THIRD FLOOR	1	12	7	4
FOURTH FLOOR	1	12	7	4
FIFTH FLOOR	1	12	7	4
SIXTH FLOOR	1	12	7	4
TOTALS	4	48	28	16
TOTAL UNIT COUNT				**96**

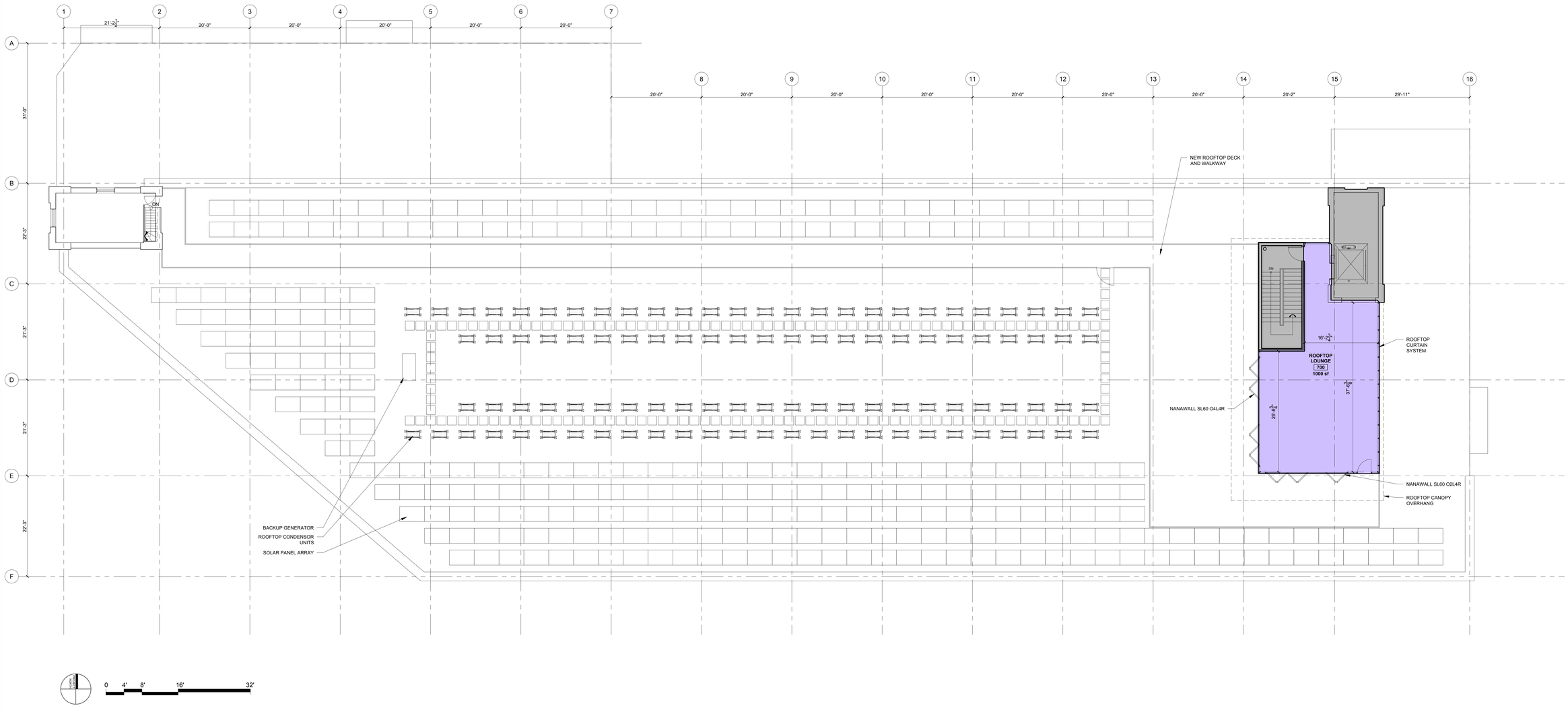

1 ROOF PLAN
1/8" = 1'-0"

© 2020 RYAN SENATORE ARCHITECTURE

MIXED USE BUILDING

59 ELM STREET
BIDDEFORD, MAINE

RSA
RYAN SENATORE
ARCHITECTURE
500 CONGRESS STREET
PORTLAND, MAINE 04101
207-747-5159
senatorearchitecture.com

CONSULTANTS:

REVISIONS:

PROGRESS PRINT ONLY
Not for Construction
01-19-21

DATE:

PROJECT No.	2062
DRAWN BY:	RJS, ES
CHECKED BY:	RJS
SCALE:	AS NOTED

SHEET TITLE:
ROOF PLAN

A1-7

1 GOOCH STREET REDEVELOPMENT

TOM WATSON & CO.
BIDDEFORD, MAINE

LEGEND

EXISTING		PROPOSED
	UNDERDRAIN	
	GREEN SPACE	
	UTILITY PAVEMENT CUTS	
	STRIPING	
	EROSION CONTROL BERM / SOCK	ECB
	EDGE OF EX. PAVEMENT	
	CURB	
	SIGN	
	LAMP OR LIGHT POLE	
	UTILITY POLE	
	GUY WIRE	
	WATER VALVE	
	FIRE HYDRANT	
	SEWER MANHOLE	
	CATCH BASIN	
	DRAIN MANHOLE	
UE — UE	UNDERGROUND ELECTRIC LINE	UGE — UGE
W — W	UNDERGROUND WATER LINE	2"W
64	MINOR CONTOURS (1 FT)	64
65	MAJOR CONTOURS (5 FT)	65
	GAS LINE	GAS
SD — SD	STORM DRAIN LINE	> — >
SS — SS	SEWER LINE	S — S
	SEWER FORCE MAIN	FM
	EXISTING/PROPOSED BUILDING	
OHW	OVERHEAD ELECTRICAL/TELEPHONE/CABLE	
	PROPERTY LINE	
	SETBACKS	

INDEX

C–01	COVER SHEET & LEGEND
C–02	GENERAL NOTES
EX	ALTA / NSPS LAND TITLE SURVEY – PREPARED BY OWEN HASKELL, INC.
EX	ALTA / NSPS LAND TITLE SURVEY – PREPARED BY NORTHEAST CIVIL SOLUTIONS, INC.
EX	LOT SPLIT PLAN – PREPARED BY NORTHEAST CIVIL SOLUTIONS, INC.
C–03	CONSTRUCTION MANAGEMENT/E&SC PLAN
C–10	SITE & LANDSCAPE PLAN
C–20	UTILITY PLAN
C–30	GRADING & DRAINAGE PLAN
C–40	SITE DETAILS – 1
C–41	SITE DETAILS – 2
C–42	UTILITY DETAILS – 1
C–43	UTILITY DETAILS – 2
C–44	UTILITY DETAILS – 3
C–45	DRAINAGE DETAILS
C–46	EROSION & SEDIMENTATION CONTROL DETAILS
C–47	EROSION & SEDIMENTATION CONTROL NOTES

CALL BEFORE YOU DIG
1–888–DIG–SAFE
1–888–344–7233

UTILITIES

SEWER:

DEPARTMENT OF PUBLIC WORKS (DPW)
205 MAIN STREET
BIDDEFORD, MAINE 04005
CONTACT: TOM MILLIGAN, P.E.
(207) 284–9118

WATER:

MAINE WATER COMPANY
93 INDUSTRIAL PARK ROAD
SACO, MAINE 04072
CONTACT: MARCUS KNIPP
(207) 282–1543

ELECTRIC:

CENTRAL MAINE POWER COMPANY (CMP)
162 CANCO ROAD
PORTLAND, MAINE 04103
CONTACT: JAMIE COUGH
(207) 207–842–2367

TELEPHONE:

CONSOLIDATED COMMUNICATIONS
45 FOREST AVENUE
PORTLAND, MAINE 04101
CONTACT: JAY CUNHA
(207) 745–9363

CABLE:

SPECTRUM CABLE
118 JOHNSON ROAD
PORTLAND, MAINE, 04102
CONTACT: DAN MINCHEV
(207) 253–2334

NATURAL GAS:

UNITIL SERVICE CORP.
376 RIVERSIDE INDUSTRIAL PARKWAY
PORTLAND, MAINE 04103
CONTACT: BRIDGET MATHERS
(207) 541–2505

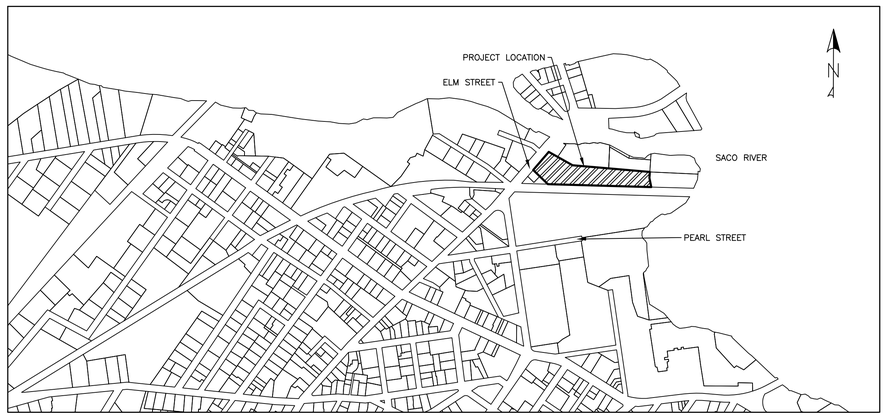

VICINITY MAP
SCALE: 1" = 500'

PROJECT TEAM

DEVELOPER:

TOM WATSON & CO.
PORTLAND, MAINE
CONTACT: JOHN LALIBERTE
(207) 590–2029

ARCHITECT:

RYAN SENATORE ARCHITECTURE
PORTLAND, MAINE
CONTACT: RYAN SENATORE, R.A.
(207) 650–6414

SURVEYOR:

OWEN HASKELL, INC.
FALMOUTH, MAINE
CONTACT: RANDY LOUBIER, PLS
(207) 774–0424

NORTHEAST CIVIL SOLUTIONS, INC.
SCARBOROUGH, MAINE
CONTACT: TROY F MCDONALD
(207) 883–1000

CIVIL ENGINEER:

ACORN ENGINEERING, INC.
PORTLAND, MAINE
CONTACT: PETER F HEIL, P.E.
(207) 775–2655

ABBREVIATIONS

PARTIAL LIST OF ABBREVIATIONS AND THEIR CORRESPONDING MEANING. PLEASE CONTACT THE ENGINEER FOR ANY CLARIFICATION

APPROX.	APPROXIMATE
BC	BOTTOM OF CURB
BMP	BEST MANAGEMENT PRACTICE
BOT.	BOTTOM
CB	CATCH BASIN
CF	CUBIC FOOT
CIP	CAST IN PLACE
CL	CENTERLINE
CM	CONSTRUCTION MANAGER
CMP	CENTRAL MAINE POWER
CONC.	CONCRETE
CPP	CORRUGATED PLASTIC PIPE
CY	CUBIC YARD
DIP	DUCTILE IRON PIPE
DIA.	DIAMETER
DIM.	DIMENSION
EA.	EACH
ELEC.	ELECTRICAL
ELEV.	ELEVATION
EQUIV.	EQUIVALENT
EST.	ESTIMATE
EX.	EXISTING
FFE	FINISH FLOOR ELEVATION
FT.	FEET
GAL.	GALVANIZED
ID	INNER DIAMETER
IN.	INCH
INV.	INVERT
L	LENGTH
MAX.	MAXIMUM
MDOT	MAINE DEPARTMENT OF TRANSPORTATION
M.E.P	MECHANICAL, ELECTRICAL, PLUMBING DESIGNER
MFG.	MANUFACTURED
MH	MANHOLE
MIN.	MINIMUM
O.C.	ON CENTER
OD	OUTSIDE DIAMETER
OHE/T/C	OVERHEAD ELECTRIC/TELEPHONE/CABLE
PC	PRECAST
PE	PROFESSIONAL ENGINEER
PL	PROPERTY LINE
PLS	PROFESSIONAL LAND SURVEYOR
PROP.	PROPOSED
PSI	POUNDS PER SQUARE INCH
PVC	POLYVINYL CHLORIDE
PWD	PORTLAND WATER DISTRICT
R	RADIUS
RD	ROOF DRAIN
RET.	RETAINING
ROW	RIGHT OF WAY
S	SLOPE
SD	STORM DRAIN
SDR	STANDARD DIMENSION RATIO
SF	SQUARE FEET
SMH	SEWER MANHOLE
SPEC.	SPECIFICATION
TC	TOP OF CURB
TW	TOP OF WALL
TYP.	TYPICAL
UD	UNDERDRAIN
UGE	UNDERGROUND ELECTRIC
VIF	VERIFY IN FIELD

PERMIT LEVEL
NOT ISSUED FOR
CONSTRUCTION

ISSUED FOR	BY	DATE
SRCC	PFH	1/28/2021
CITY REVIEW	PFH	2/3/2021

DRAWING NAME: COVER SHEET & LEGEND
PROJECT NAME/ADDRESS: 1 GOOCH STREET REDEVELOPMENT
CLIENT/OWNER OF RECORD: TOM WATSON & CO. 188 STATE STREET, 3RD FLOOR, PORTLAND ME 04101

ACORN ENGINEERING, INC.
PO BOX 7551 PORTLAND, MAINE 04101
(207) 775–2655

THIS PLAN SHALL NOT BE MODIFIED WITHOUT WRITTEN PERMISSION FROM ACORN ENGINEERING, INC. ANY MODIFICATIONS MADE BY OTHERS, OR OTHERWISE, SHALL BE AT THE USER'S SOLE RISK AND WITHOUT LIABILITY TO ACORN ENGINEERING, INC.

FILE:	1093.10_CIVIL
JN:	1093.10
SCALE:	AS NOTED
DESIGNED BY:	PFH
DRAWN BY:	ZMS
CHECKED BY:	WHS

STATE OF MAINE — PETER F. HEIL No. 15318 LICENSED — 2/3/21

DRAWING NO.
C-01

GENERAL NOTES:

1. THE CONTRACTOR SHALL CALL THE APPROPRIATE UTILITY COMPANIES AND DIG SAFE AT LEAST 72 HOURS PRIOR TO ANY EXCAVATION TO REQUEST EXACT FIELD LOCATION FOR UTILITIES. OTHERWISE IT SHALL BE THE CONTRACTOR'S RESPONSIBILITY TO FIELD VERIFY THE LOCATION OF UNDERGROUND UTILITIES AND LOCATE ANY POTENTIAL CONFLICTS WITH THE APPROVED PLANS PRIOR TO CONSTRUCTION.

2. THE CONTRACTOR IS RESPONSIBLE FOR MAINTENANCE OF ALL EROSION CONTROL MEASURES SHOWN ON THE PLAN. IF DEEMED NECESSARY BY THE OWNER OR OWNER'S REPRESENTATIVE (IF APPLICABLE), ADDITIONAL EROSION CONTROL MEASURES SHALL BE INSTALLED AT NO ADDITIONAL COST TO THE OWNER.

3. THE CONTRACTOR SHALL PREPARE THEIR OWN MATERIAL SCHEDULE BASED ON THE PLANS AND FIELD VERIFICATION BY THE CONTRACTOR. ALL MATERIAL SCHEDULES SHOWN WITHIN THE PLAN SET ARE FOR GENERAL INFORMATION ONLY.

4. ALL CONSTRUCTION METHODS, TESTING AND MATERIALS SHALL CONFORM TO THE MAINE DEPARTMENT OF TRANSPORTATION SPECIFICATIONS, THE CITY OF PORTLAND AND SERVICING UTILITY REQUIREMENTS, IF ANY. IN CASES WHERE THESE CONFLICT THE MOST STRINGENT SPECIFICATION SHALL APPLY AT NO ADDITIONAL COST TO THE OWNER.

5. THE SITE CONTRACTOR SHALL MAINTAIN A SET OF PAPER AND CAD DRAWINGS WHICH SHALL RECORD THE ACTUAL LOCATION, DIMENSIONS, ELEVATIONS, MATERIALS OF THEIR WORK, INDICATING THEREON ALL VARIATIONS FROM THE CONTRACT DRAWINGS. THE CONTRACTOR SHALL PROVIDE THE OWNER WITH ONE COMPLETE SET OF REPRODUCIBLE RECORD DRAWINGS, IN .DWG FORMAT AND PAPER, STAMPED ''AS-BUILT''. IF AUTOCAD CAPABILITY IS NOT AVAILABLE, EXCLUDE FROM BID IN WRITING.

6. THE CONTRACTOR WILL REMAIN SOLELY AND COMPLETELY RESPONSIBLE FOR ENFORCEMENT OF AND COMPLIANCE WITH 1) ALL CONTRACT PLANS AND SPECIFICATIONS, 2) APPLICABLE INTERNATIONAL BUILDING CODE REQUIREMENTS, AND 3) ALL SITE WORKING CONDITIONS AND SAFETY REQUIREMENTS, DAY AND NIGHT, FOR BOTH PERSONS AND PROPERTY, IN EACH CASE BOTH BY THE CONTRACTOR AND ITS SUBCONTRACTORS. THESE INCLUDE ALL OSHA, NIOSH, U.S. EPA AND ANY OTHER APPLICABLE GOVERNMENTAL REGULATIONS.

7. EXISTING CONDITIONS, BOUNDARY SURVEY, AND TOPOGRAPHY FROM THE PLAN TITLED ATLA / NSPS LAND TITLE SURVEY PREPARED BY OWEN HASKELL, INC., DATED 12/18/2021 & PLAN TITLED ATLA / NSPS LAND TITLE SURVEY PREPARED BY NORTHEAST CIVIL SOLUTIONS, DATED 10/28/2020

8. THE CONTRACTOR IS RESPONSIBLE FOR MAINTAINING ACCESS TO THE SITE AT ALL TIMES. THE CONTRACTOR SHALL BE RESPONSIBLE FOR ALL TEMPORARY MARKINGS, SIGNAGE AND INCIDENTALS TO MAINTAIN A SAFE VEHICLE AND PEDESTRIAN ACCESS THOUGH THE LIFE OF THE PROJECT. THE CONTRACTOR SHALL NOTIFY THE BIDDEFORD PUBLIC SAFETY DIVISION ROUTINELY REGARDING TEMPORARY IMPACTS OR CHANGES TO SITE ACCESS CONDITIONS.

9. CONSTRUCTION MANAGEMENT PLAN BY ACORN ENGINEERING INC. SHALL BE REFERRED TO FOR ANTICIPATED PROJECT SCHEDULE AND CLOSURES. TRAFFIC CONTROL SHALL BE THE SOLE RESPONSIBILITY OF THE CONTRACTOR.

10. CONTRACTOR TO DETERMINE SOIL CLASSIFICATION INDEPENDENTLY FOR TRENCH, SHORING, AND OTHER SIMILAR CONSTRUCTION MEANS AND METHODS APPLICATIONS.

11. NO HOLES, TRENCHES, OR STRUCTURES SHALL BE LEFT OPEN OR UNATTENDED OVERNIGHT IN ANY AREA ACCESSIBLE TO THE PUBLIC OR WITHIN THE PUBLIC RIGHT-OF-WAY.

12. THE CONTRACTOR SHALL CONDUCT A PRE-CONSTRUCTION SURVEY OF INTERIOR SUBGRADE AND ABOVE GRADE ACCESSIBLE WALLS, CEILINGS, FLOORS, ROOF AND VISIBLE EXTERIOR AS VIEWED FROM THE GRADE LEVEL. THIS SHALL BE COMPLETED AT A MINIMUM FOR ADJACENT STRUCTURES AND STRONGLY RECOMMENDED FOR STRUCTURES DIRECTLY ACROSS THE SITE ALONG ELM STREET AND GOOCH STREET. A COPY OF THE SURVEY SHOULD BE PROVIDED TO THE OWNER. DOCUMENT WITH PICTURES AT A MINIMUM.

13. THE CONTRACTOR SHALL PROVIDE A GPS MODEL OF THE PROPERTY TO ACORN ENGINEERING.

14. THE CONTRACTOR SHALL SURVEY ROCK SURFACE PRIOR TO EXCAVATION AND DEVELOP VOLUME CALCULATIONS TO SHARE WITH THE ENGINEER, ACORN ENGINEERING INC. (ACORN), IF ANY.

15. THE CONTRACTOR SHALL BE RESPONSIBLE FOR THE PRESERVATION OF ALL TREES AND SHRUBS ON THE PROJECT WHICH ARE NOT TO BE REMOVED.

16. THE CONTRACTOR SHALL BE RESPONSIBLE FOR REPAIRING ANY TRENCH PAVEMENT THAT HAS EXPERIENCED EXCESSIVE SETTLEMENT, CRACKING, OR OPENING OF JOINTS. REPAIRS MAY INCLUDE OVERLAY. REMOVAL OF WORK MAY BE NECESSARY AFTER THE FINAL ACCEPTANCE OF WORK OR PRIOR TO THE END OF THE WARRANTY PERIOD. THIS WORK SHALL BE DONE AT THE CONTRACTOR'S EXPENSE.

CIVIL SITE NOTES:

1. THE CONTRACTOR SHALL SUBMIT IN WRITING ANY REQUESTS TO ACORN TO MODIFY THE CONTRACT DOCUMENTS.

2. ALL SHOP, ERECTION, AND CONSTRUCTION DRAWINGS SHALL BE CHECKED AND STAMPED BY THE CONTRACTOR PRIOR TO SUBMISSION FOR ACORN'S REVIEW. ANY UNCHECKED OR NON-STAMPED SUBMITTALS WILL BE RETURNED WITHOUT REVIEW.

3. CONTRACTOR SHALL THOROUGHLY INSPECT AND SURVEY EXISTING STRUCTURES AND SITE TO VERIFY CONDITIONS THAT AFFECT THE WORK SHOWN ON THE DRAWINGS. CONTRACTOR TO NOTIFY ACORN OF ANY DISCREPANCIES PRIOR TO PROCEEDING.

4. DETAILS SHOWN APPLY TO ALL SIMILAR CONDITIONS UNLESS OTHERWISE INDICATED.

5. ALTHOUGH ALL DUE DILIGENCE HAS BEEN APPLIED TO MAKE THE DRAWINGS AS COMPLETE AS POSSIBLE, NOT ALL DETAILS ARE ILLUSTRATED, NOR IS EVERY EXCEPTION CONDITION ADDRESSED WITHIN THE CONTRACT DOCUMENTS.

6. ALL PROPRIETARY CONNECTIONS SHALL BE INSTALLED IN ACCORDANCE WITH THE MANUFACTURER'S RECOMMENDATIONS.

7. THE CONTRACTOR IS RESPONSIBLE FOR THE COORDINATION OF ALL WORK, INCLUDING DIMENSION AND LAYOUT VERIFICATION, MATERIALS COORDINATION, SHOP DRAWING REVIEW, AND THE WORK OF ANY SUBCONTRACTORS.

8. UNLESS OTHERWISE SPECIFICALLY INDICATED, THE DRAWINGS DO NOT DESCRIBE OR DIRECT MEANS OR METHODS OF CONSTRUCTION.

9. THE CONTRACTOR, IN THE PROPER SEQUENCE, SHALL PERFORM OR SUPERVISE ALL WORK NECESSARY TO ACHIEVE THE FINAL COMPLETED STRUCTURE, AND TO PROTECT THE STRUCTURE, WORKMEN, AND OTHERS DURING THE CONSTRUCTION. SUCH WORK SHALL INCLUDE, BUT NOT BE LIMITED TO, BRACING, SHORING FOR CONSTRUCTION EQUIPMENT, SHORING FOR EXCAVATION, FORMWORK, SCAFFOLDING, SAFETY DEVICES AND PROGRAMS OF ALL KINDS, SUPPORT AND BRACING FOR CRANES AND OTHER ERECTION EQUIPMENT.

10. DO NOT BACKFILL AGAINST RETAINING WALLS UNTIL SUPPORTING SLABS AND FLOOR FRAMING ARE IN PLACE AND SECURELY ANCHORED, UNLESS ADEQUATE BRACING IS PROVIDED. PRIOR TO BACKFILL, PROVIDE CURING OF CONCRETE FOR 28 DAYS OR AS DIRECTED BY MATERIALS TESTING ENGINEER.

11. TEMPORARY BRACING SHALL REMAIN IN PLACE UNTIL ALL FLOORS, WALLS, ROOFS AND OTHER SUPPORTING ELEMENTS ARE IN PLACE, IF APPLICABLE.

12. ALL PAVEMENT JOINTS SHALL BE SAWCUT AND APPLIED WITH TACK COAT PRIOR TO PAVING TO PROVIDE A DURABLE AND UNIFORM JOINT.

13. ACORN BEARS NO RESPONSIBILITY FOR THE ABOVE ITEMS, AND SITE OBSERVATION VISITS DO NOT IN ANY WAY INCLUDE INSPECTION OF THEM.

14. EXCAVATIONS ACCOMPLISHED AS PART OF THIS PROJECT SHALL BE CONSTRUCTED IN ACCORDANCE WITH SUBPART P OF 29 CRF PART 1926.650-.652 (CONSTRUCTION STANDARD FOR EXCAVATIONS).

15. ALL TRENCH PAVEMENT REPAIR SHALL BE COMPLETED WITH THE USE OF A STREET PAVER WITH A SCREED WIDTH CAPABLE OF SPANNING THE FULL WIDTH OF THE TRENCH UNLESS OTHERWISE AUTHORIZED BY THE ENGINEER.

SPECIAL INSPECTION NOTES

1. ALL SITE SOILS-RELATED WORK AND FOOTING EXCAVATIONS PRIOR TO PLACING FORMS SHALL BE REVIEWED BY THE PROJECT GEOTECHNICAL ENGINEER.

2. ALL SITE DRAINAGE-RELATED WORK SHALL BE REVIEWED BY ACORN ENGINEERING.

3. NORMAL REVIEWS BY LOCAL BUILDING DEPARTMENT. NOTIFY 48 HOURS PRIOR TO REQUIRED REVIEW.

4. REQUIRED SPECIAL INSPECTIONS PER I.B.C. SECTION 1705.6 BY AN APPROVED SPECIAL INSPECTOR RETAINED BY OWNER. CONTRACTOR TO COORDINATE SPECIAL INSPECTIONS.

5. SPECIAL INSPECTOR SHALL BE A QUALIFIED PERSON WHO SHALL DEMONSTRATE COMPETENCE, TO THE SATISFACTION OF THE BUILDING OFFICIAL, FOR INSPECTION OF THE PARTICULAR TYPE OF CONSTRUCTION OR OPERATION REQUIRING SPECIAL INSPECTION.

5.1. DUTIES AND RESPONSIBILITIES OF THE SPECIAL INSPECTOR SHALL BE TO OBSERVE AND/OR TEST THE WORK ASSIGNED AND OUTLINE ABOVE FOR CONFORMANCE WITH THE CONTRACT DOCUMENTS, ALL DISCREPANCIES SHALL BE BROUGHT TO THE IMMEDIATE ATTENTION OF THE CONTRACTOR FOR CORRECTION.

5.2. THE SPECIAL INSPECTOR SHALL FURNISH REGULAR REPORTS TO THE BUILDING OFFICIAL, THE ARCHITECT AND ENGINEER OF RECORD, AND OTHER DESIGNATED PERSONS. PROGRESS REPORTS FOR CONTINUOUS INSPECTION SHALL BE FURNISHED WEEKLY. INDIVIDUAL REPORTS OF PERIODIC INSPECTIONS SHALL BE FURNISHED WITHIN ONE WEEK OF INSPECTION DATES. THE REPORTS SHALL NOTE UNCORRECTED DEFICIENCIES, AND NET CHANGES TO THE APPROVED CONSTRUCTION DOCUMENTS AUTHORIZED BY THE ENGINEER OF RECORD.

5.3. THE SPECIAL INSPECTOR SHALL SUBMIT A FINAL SIGNED REPORT WITHIN TEN DAYS OF THE FINAL INSPECTION STATING WHETHER THE WORK REQUIRING A SPECIAL INSPECTION WAS, TO THE BEST OF THE INSPECTOR'S KNOWLEDGE AND BELIEF, IN CONFORMANCE WITH THE APPROVED CONSTRUCTION DOCUMENTS AND THE APPLICABLE WORKMANSHIP PROVISIONS OF THE INTERNATIONAL BUILDING CODE. WORK NOT IN COMPLIANCE SHALL BE NOTED IN THE REPORT.

5.4. SPECIAL INSPECTION FIRM SHALL BE EMPLOYED BY OWNER AND COORDINATED BY THE CONTRACTOR.

LAYOUT NOTES:

1. MONUMENTS DELINEATING PROPERTY LINES OR RIGHT OF WAYS SHALL NOT BE DISTURBED DURING CONSTRUCTION OPERATIONS. IN THE CASE A MONUMENT IS DISTURBED, AT THE CONTRACTOR'S EXPENSE, THE MONUMENT SHALL BE RESET TO ITS ORIGINAL LOCATION AND ELEVATION BY A LICENSED PROFESSIONAL LAND SURVEYOR.

2. ALL DIMENSIONS ON THE FOLLOWING SHEETS TAKE PRECEDENT OVER SCALED DIMENSIONS. EACH DRAWING WITH A BAR SCALE MEANS THAT THE DRAWING/DETAIL HAS BEEN SCALED AS ACCURATELY AS POSSIBLE, AND THE BAR SCALE IS FOR GENERAL REFERENCE ONLY. IF NO BAR SCALE IS PRESENT, THEN THERE IS NO SCALE TO THAT DRAWING/DETAIL. AT NO TIME SHOULD DRAWINGS BE SCALED FROM. ANY DISCREPANCIES BETWEEN DRAWINGS, DETAILS, SPECIFICATIONS AND THE FIELD CONDITION SHALL BE IMMEDIATELY REPORTED TO ACORN FOR FURTHER DIRECTIONS BEFORE ANY ADDITIONAL WORK PROCEEDS.

3. SIGNAGE, STRIPING, AND PAVEMENT MARKINGS SHALL BE IN ACCORDANCE WITH THE MANUAL ON UNIFORM TRAFFIC CONTROL DEVICES (MUTCD).

4. ALL TRAFFIC CONTROL SIGNS INDICATED ON THE SITE LAYOUT PLAN ARE TO MEET ALL REQUIREMENTS & CONDITIONS OF THE CITY OF BIDDEFORD, MAINE DEPARTMENT OF TRANSPORTATION AND THE MANUAL ON UNIFORM TRAFFIC CONTROL DEVICES, LATEST EDITION.

5. THE CONTRACTOR SHALL OBTAIN THE SERVICES OF A LICENSED PROFESSIONAL LAND SURVEYOR TO PROVIDE A MINIMUM OF TWO TEMPORARY BENCHMARKS WITHIN THE SITE AND TO LOCATE PROPOSED STRUCTURE CORNERS.

6. CONTRACTOR TO ENSURE THAT ACCESS, INCLUDING BUT NOT LIMITED TO WALKWAYS, DRIVEWAYS, AND MAILBOXES ADJACENT TO THE PROJECT REMAIN FUNCTIONAL AND AVAILABLE FOR USE AT ALL TIMES.

PERMITTING NOTES

1. THIS PROJECT IS SUBJECT TO THE TERMS AND CONDITIONS OF A MAJOR SUBDIVISION & SITE PLAN PERMIT FROM THE CITY OF BIDDEFORD, PERMIT FROM THE SACO RIVER CORRIDOR COMMISSION, NATURAL RESOURCE PROTECTION ACT (NRPA) PERMIT AND STORMWATER PERMIT BY RULE FROM MDEP, AND TRAFFIC MOVEMENT PERMIT FROM MDOT.

2. THE CONTRACTOR SHALL REVIEW THE ABOVE REFERENCED PERMITS PRIOR TO SUBMITTING A BID FOR THIS PROJECT, AND INCLUDE COSTS AS NECESSARY TO COMPLY WITH THE CONDITIONS OF THESE PERMITS.

3. ALL WORK WITHIN THE PUBLIC RIGHT-OF-WAY REQUIRES A STREET OPENING PERMIT FROM THE CITY OF BIDDEFORD. ADDITIONALLY, COORDINATE WITH THE DEPARTMENT OF PUBLIC WORKS.

GRADING AND DRAINAGE NOTES:

1. TOPSOIL STRIPPED FROM THE SITE THAT IS SUITABLE FOR REUSE AS LOAM (MEETS THE REQUIREMENTS WITHIN SECTION 615 OF THE MDOT STANDARD SPECIFICATIONS, MOST RECENT VERSION AND IS FREE OF TRACEABLE AMOUNTS OF CONTAMINANTS) SHALL BE STOCKPILED WITHIN THE PROPOSED LIMIT OF WORK AREA. THE CONTRACTOR SHALL NOT ASSUME THAT ANY STRIPPED TOPSOIL WILL BE ACCEPTABLE FOR REUSE WITH THEIR ESTIMATE.

2. THE CONTRACTOR SHALL ANTICIPATE THAT GROUNDWATER WILL BE ENCOUNTERED DURING CONSTRUCTION AND SHALL INCLUDE SUFFICIENT COSTS WITHIN THEIR BID TO PROVIDE DEWATERING AS NECESSARY; NO SEPARATE PAYMENT SHALL BE MADE TO THE CONTRACTOR FOR DEWATERING. DEWATERING SHALL INCLUDE TREATMENT OF SILT THROUGH THE USE OF A DIRTBAG BY ACF ENVIRONMENTAL OR APPROVED EQUIVALENT.

3. THE OWNER SHALL BE RESPONSIBLE FOR OBTAINING ANY EASEMENT OR TEMPORARY CONSTRUCTION RIGHTS AS NECESSARY BY PRIVATE ADJACENT LAND OWNERS. THE CONTRACTOR SHALL NOT DISTURB ANY SOIL BEYOND THE PROPERTY LINE WITHOUT NOTIFYING AND OBTAINING SUCH EASEMENT OR TEMPORARY CONSTRUCTION RIGHT FROM THE ADJACENT LAND OWNERS. PRIOR TO THE CONTRACTOR PRICING THE WORK, THEY SHALL PROVIDE ACORN WITH PROOF OF SUCH EASEMENT OR TEMPORARY RIGHTS. SHOULD EASEMENTS OR TEMPORARY RIGHTS NOT BE AVAILABLE, THE CONTRACTOR SHALL INCLUDE COST FOR BRACING AND SHORING AS NECESSARY.

4. THE CONTRACTOR SHALL PROVIDE A FINISH PAVEMENT SURFACE FREE OF LOW SPOTS AND PONDING AREAS. THE MINIMUM SLOPE SHALL MEET OR EXCEED 0.5% IN ALL CASES. ALL SLOPES SHALL BE AWAY FROM BUILDINGS AND TOP OF PAVEMENT SHALL BE AT OR BELOW EXISTING FINISH FLOOR ELEVATIONS.

5. NO ADDITIONAL PAYMENT FOR UNSUITABLE MATERIALS.

6. ALL STORM DRAIN PIPE SHALL BE SMOOTH BORE INTERIOR PROVIDING A MANNINGS ROUGHNESS COEFFICIENT OF N=0.012 OR LESS.

7. ADJUST ALL MANHOLES, CATCH BASINS, CURB BOXES, ETC. WITHIN LIMITS OF WORK TO FINISH GRADE.

8. NATIVE SOILS. IT IS THE CONTRACTOR'S RESPONSIBILITY TO LIMIT THE DISTURBANCE TO SUBGRADE SOILS. SHOULD THE SUBGRADE BECOME YIELDING OR DIFFICULT TO WORK, CONTACT ACORN. THE DISTURBED AREAS SHALL BE EXCAVATED AND BACKFILLED WITH COMPACTED SELECT FILL OR CRUSHED STONE AT NO ADDITIONAL EXPENSE TO THE OWNER.

9. ALL SUBGRADE PREPARATION IS SUBJECT TO THE RECOMMENDATIONS OF THE PROJECT GEOTECHNICAL ENGINEER, IF APPLICABLE.

EROSION CONTROL NOTES:

1. DISTURBED AREAS ARE DEFINED AS THOSE SURFACES WHERE EXISTING VEGETATION OR STRUCTURES HAVE BEEN REMOVED, EXPOSING NATIVE SOIL TO THE ELEMENTS.

2. ALL ROUTINE WORK ACTIVITIES SHALL BE CONDUCTED IN SUCH A WAY TO LIMIT THE AMOUNT OF DISTURBED AREA AT ONE TIME TO THE EXTENT PRACTICABLE.

3. PRIOR TO THE START OF ANY CLEARING/LAND DISTURBING ACTIVITIES, THE CONTRACTOR SHALL INSTALL APPLICABLE EROSION CONTROL DEVICES SUCH AS PERIMETER SILT FENCE, AND OTHER APPLICABLE MEASURES. IN THE EVENT THE CONTRACTOR IS NOT SURE A EROSION CONTROL MEASURE SHOULD BE IMPLEMENTED, THE CONTRACTOR SHALL CONTACT THE ENGINEER OF RECORD TO CONFIRM IMPLEMENTATION OF ANY EROSION CONTROL DEVICES.

4. ALL GROUND AREAS GRADED FOR CONSTRUCTION SHALL BE GRADED, LOAMED, SEEDED AND MULCH SHALL BE APPLIED AS SOON AS POSSIBLE WITHIN 7 DAYS FOLLOWING THE COMPLETION OF ANY SOIL DISTURBANCE, AND PRIOR TO ANY STORM EVENT.

5. EROSION AND SEDIMENTATION CONTROL MEASURES SHALL BE INSTALLED TO THE SATISFACTION OF THE CITY. THE CONTRACTOR SHALL REFERENCE THE APPROVED EROSION AND SEDIMENTATION CONTROL REPORT FOR TEMPORARY AND PERMANENT EROSION AND SEDIMENTATION CONTROL DEVICES IN ADDITION TO THE PLAN SET. THE CONTRACTOR SHALL ALSO REFER TO THE MAINE D.E.P.'S PERMIT CONDITIONS, FINDINGS OF FACT AND ORDER (IF ANY), AND THE CURRENT MAINE EROSION AND SEDIMENT CONTROL BMP MANUAL FOR ADDITIONAL INFORMATION.

6. PRIOR TO PAVING, THE CONTRACTOR SHALL REMOVE ALL SEDIMENT FROM STORM DRAINS, CATCH BASINS, AND APPURTENANCES.

7. REFER TO THE EROSION CONTROL DETAILS & NOTES FOR ADDITIONAL INFORMATION.

UTILITY NOTES:

1. THE CONTRACTOR IS SPECIFICALLY CAUTIONED THAT THE LOCATION AND ELEVATION OF THE EXISTING UTILITIES AS SHOWN ON THESE PLANS IS BASED UPON RECORDS OF VARIOUS UTILITY COMPANIES AND, WHERE POSSIBLE, MEASUREMENTS TAKEN IN THE FIELD. THIS INFORMATION IS NOT TO BE RELIED UPON AS BEING EXACT OR COMPLETE. IT SHALL BE THE RESPONSIBILITY OF THE CONTRACTOR TO TEST PIT TO DETERMINE THE EXACT LOCATION AND ELEVATION OF UTILITIES TO COORDINATE WITH THE PROPOSED CONNECTIONS OR CROSSING. ANY DISCREPANCIES SHALL BE IMMEDIATELY REPORTED TO ACORN FOR FURTHER DIRECTIONS BEFORE ANY ADDITIONAL WORK PROCEEDS.

2. CONTRACTOR SHALL, AT NO ADDITIONAL COST TO THE OWNER, CONDUCT EXPLORATORY EXCAVATIONS AT LOCATIONS WHERE PROPOSED EXCAVATION WILL INTERSECT WITH EXISTING UTILITIES, PRIOR TO THE ORDERING OF STRUCTURES.

3. ALL NEW SANITARY MANHOLES SHALL BE VACUUM TESTED BEFORE BACKFILLING. TESTING SHALL BE COMPLETED IN ACCORDANCE WITH TECHNICAL REPORT #16 (TR-16): GUIDES FOR THE DESIGN OF WASTEWATER TREATMENT WORKS, PREPARED BY THE NEW ENGLAND INTERSTATE WATER POLLUTION CONTROL COMMISSION.

4. SEWER MANHOLES SHALL BE 4' ID UNLESS OTHERWISE STATED ON THE PLANS.

5. CONTRACTOR TO PROVIDE MIN. 5.5' OF COVER FROM TOP OF PIPE TO FINISH GRADE FOR WATER MAINS.

6. THRUST BLOCKS SHALL BE USED FOR THRUST RESTRAIN ON WATER MAINS. DETAIL AND LIMITS FOR THRUST BLOCKS ARE SHOWN WITHIN THE PLAN SET.

7. ALL REQUIRED FITTINGS FOR THE WATER MAIN ARE NOT SHOWN ON DRAWINGS. CONTRACTOR SHALL FURNISH AND INSTALL ALL NECESSARY FITTINGS REQUIRED TO CONSTRUCT THE WATER MAIN IN ACCORDANCE WITH CITY OF BIDDEFORD, STATE OF MAINE, AND AMERICAN WATER WORKS ASSOCIATION STANDARDS AND REGULATIONS.

8. CONTRACTOR SHALL COORDINATE WORK REGARDING ANY WATER MAIN CONNECTION AND WATER MAIN SHUTDOWN WITH THE PORTLAND WATER DISTRICT AT LEAST SEVEN (7) DAYS PRIOR TO CONSTRUCTION.

9. ALL WATER PIPE INSTALLATION SHALL CONFORM WITH THE MAINE WATER COMPANY SPECIFICATIONS AND PROCEDURES, MOST RECENT EDITION.

10. IT SHALL BE THE RESPONSIBILITY OF THE CONTRACTOR TO RELOCATE ALL EXISTING UTILITIES WHICH CONFLICT WITH THE PROPOSED IMPROVEMENTS SHOWN ON THE PLANS.

11. SEWER, GAS, TELEPHONE, ELECTRICITY, CABLE, WATER AND ANY OTHER UTILITY CONNECTIONS SHALL BE REVIEWED BY PLUMBING, ELECTRICAL, AND MECHANICAL DESIGNER FOR CONSISTENCY WITH THEIR PLANS PRIOR TO CONSTRUCTION.

12. COORDINATE EXIT POINT FOR SECONDARY UTILITY SERVICES WITH THE ARCHITECT/ELECTRICAL ENGINEER. SECONDARY LINE LOCATIONS NOT PROVIDED BY ACORN WITHIN THE UTILITY PLAN.

13. IT SHALL BE THE CONTRACTOR'S RESPONSIBILITY TO OBTAIN ALL THE NECESSARY PERMITS FOR THE INSTALLATION OF THE UTILITIES AND STORMDRAINS WITHIN THE PUBLIC RIGHT OF WAY. THE CONTRACTOR SHALL SUBMIT A MAINTENANCE OF TRAFFIC PLAN TO THE CITY IN ACCORDANCE WITH THE CITY OF PORTLAND TECHNICAL MANUAL PRIOR TO ANY WORK.

14. THE CONTRACTOR SHALL PROVIDE AND INSTALL ALL BOXES, FITTINGS, CONNECTORS, COVER PLATES AND OTHER MISCELLANEOUS ITEMS NOT NECESSARILY DETAILED ON THE DRAWINGS TO RENDER INSTALLATION OF UTILITIES COMPLETE AND OPERATIONAL AT NO EXTRA EXPENSE TO THE OWNER.

15. ALL PIPE LINES SHALL SLOPE UNIFORMLY BETWEEN ELEVATIONS INDICATED ON THE DRAWINGS. NO CRESTS OR SAGS IN THE PIPING WILL BE PERMITTED. ALL HORIZONTAL AND VERTICAL BENDS IN PRESSURIZED PIPE LINES SHALL BE SUITABLY RESTRAINED WITH THRUST BLOCKS OR RETAINER GLANDS. RETAINER GLANDS ALLOWED FOR DUCTILE IRON PIPE ONLY. PROVIDE ALL BENDS, HORIZONTAL AND VERTICAL, AS REQUIRED TO MEET THE GRADES AND ALIGNMENTS INDICATED ON THE DRAWINGS.

16. ALL WASTEWATER PIPING, EXCLUDING BUILDING DRAINS, AND ALL PRESSURIZED PIPING, TO INCLUDE WATER MAINS, INSTALLED BENEATH STRUCTURES SHALL BE ENCASED IN CONCRETE.

17. WHERE NEW PIPING IS TO BE CONNECTED TO EXISTING PIPING, THE CONTRACTOR SHALL FURNISH AND INSTALL ALL ADAPTERS, FITTINGS AND ADDITIONAL PIPE AS REQUIRED TO ENSURE A COMPLETE AND PROPERLY FUNCTIONING CONNECTION. CONTRACTOR TO VERIFY LOCATION, ELEVATION, ORIENTATION AND MATERIAL OF CONSTRUCTION. ADAPTERS AND FITTINGS ARE INCIDENTAL TO THE PIPE INSTALLATION.

18. WHENEVER POSSIBLE, WATER LINES SHOULD BE INSTALLED OVER WASTEWATER LINES. A MINIMUM SEPARATION OF 18 INCHES BETWEEN THE BOTTOM OF THE WATER LINE AND THE TOP OF THE WASTEWATER LINE SHALL BE MAINTAINED WHERE POSSIBLE. WHERE A WATER LINE CROSSES UNDER THE WASTEWATER LINE, A FULL LENGTH OF WASTEWATER PIPE SHALL BE CENTERED ABOVE THE WATER LINE SO THAT BOTH JOINTS WILL BE AS FAR FROM THE WATER LINE AS POSSIBLE,

19. THE CONTRACTOR SHALL BE ANTICIPATE THAT THE NATIVE SILT AND CLAY SOILS WILL NOT BE SUITABLE FOR PIPE TRENCH BACKFILL IN PAVED AREAS.

20. GROUNDWATER SHALL BE CONTROLLED TO A LEVEL OF AT LEAST ONE FOOT BELOW SUBGRADE OF THE PIPE OR STRUCTURE. THE CONTRACTOR SHALL MAINTAIN THE LOWERED GROUNDWATER LEVEL UNTIL CONSTRUCTION HAS BEEN COMPLETED TO SUCH AN EXTENT THAT THE STRUCTURES OR PIPES WILL NOT BE FLOATED OR OTHERWISE DAMAGED.

21. EXCAVATION TO SUBRADE IN NATIVE SILT AND CLAY SHALL BE COMPLETED WITH A SMOOTH EDGE BUCKET TO MINIMIZE SUBGRADE DISTURBANCE.

22. ALL ADJUSTMENTS TO FINISHED GRADE ARE TO BE COMPLETED BY THE CONTRACTOR. THE CONTRACTOR SHALL CONFIRM STRUCTURES THAT REQUIRE ADJUSTMENT WITH THE ENGINEER OR OWNERS REPRESENTATIVE PRIOR TO ADJUSTING FRAMES.

DEMOLITION NOTES:

1. THE FOLLOWING ITEMS ARE TYPICAL OF MATERIAL WHICH MAY BE ON SITE:
   - ROCK AND CONCRETE FOUNDATIONS
   - CONCRETE SLABS
   - BITUMINOUS ASPHALT PAVEMENT
   - CONCRETE PADS AND BLOCKS
   - FENCE POST AND FENCING
   - UNDERGROUND UTILITY LINES
   - ABOVE AND OR BELOW FUEL OIL AND PROPANE GAS TANKS
   - STORM DRAIN PIPES AND APPURTENANCE STRUCTURES
   - OTHER TRASH & MISCELLANEOUS SOLID WASTES

2. THE CONTRACTOR IS ADVISED TO VISIT THE SITE TO CONFIRM DEMOLITION ITEMS SINCE THE LIST IS NOT INCLUSIVE OF THE SITE CONDITIONS WHICH MAY BE ENCOUNTERED

3. ALL DISPOSAL OF DEMOLITION DEBRIS OR WASTE SHALL BE IN ACCORDANCE WITH ALL LOCAL, STATE, & FEDERAL REGULATIONS. CONTRACTORS SHALL PROVIDE OWNER WITH APPROPRIATE "BILLS OF LADING" DEMONSTRATING PROPER DISPOSAL OF ALL MATERIALS.

4. CONTRACTOR TO REVIEW PHASE 1 ENVIRONMENTAL SITE ASSESSMENT, PREPARED BY RANSOM CONSULTING, LLC, DATED 11/2/2020. ALL WORK SHALL BE IN CONFORMANCE WITH SPECIFICATIONS AS OUTLINED IN REPORT.

PERMIT LEVEL
NOT ISSUED FOR
CONSTRUCTION

ISSUED FOR	BY	DATE
SRCC	PFH	1/28/2021
CITY REVIEW	PFH	2/3/2021

DRAWING NAME: GENERAL NOTES

PROJECT NAME/ ADDRESS: 1 GOOCH STREET REDEVELOPMENT

CLIENT/OWNER OF RECORD: TOM WATSON & CO.
188 STATE STREET, 3RD FLOOR, PORTLAND ME 04101

ACORN ENGINEERING, INC.
ACORN ENGINEERING, INC.
PO BOX 4322 PORTLAND, MAINE 04101
(207) 775-2655

THIS PLAN SHALL NOT BE MODIFIED WITHOUT WRITTEN PERMISSION FROM ACORN ENGINEERING, INC. ANY MODIFICATIONS, ALTERATIONS OR OTHERWISE, SHALL BE AT THE USER'S SOLE RISK AND WITHOUT LIABILITY TO ACORN ENGINEERING, INC.

FILE:	1093.10_CIVIL
JN:	1093.10
SCALE:	AS NOTED
DESIGNED BY:	PFH
DRAWN BY:	ZMS
CHECKED BY:	WHS

STATE OF MAINE
PETER F. HEIL
No. 15318
LICENSED
2/3/21

DRAWING NO.
C-02

General Notes

1. OWNER OF RECORD: PRECISION SCREW MACHINE PRODUCTS, INC.
P.O. BOX 1944, BIDDEFORD, ME 04005
TAX MAP 40 LOT 55 & 55–3
Y.C.R.D. BOOK 15535 PAGE 402

2. BEARINGS ARE BASED ON MAINE STATE PLANE COORDINATE SYSTEM, WEST ZONE, NAD 83.

3. NO EVIDENCE OF RECENT EARTH MOVING WORK, BUILDING CONSTRUCTION, BUILDING ADDITIONS, OR RECENT STREET OR SIDEWALK CONSTRUCTION OR REPAIRS WAS OBSERVED.

4. NO PROPOSED CHANGES IN STREET LINES IS KNOWN BY THIS SURVEYOR.

5. ELEVATIONS ARE BASED ON NAVD 88 DATUM PER STATIC GPS OBSERVATIONS.

6. THE SUBJECT PROPERTY HAS ACCESS TO ELM ST., A PUBLIC WAY VIA THE FORMER GOOCH ST. RIGHT OF WAY.

Flood Zone Note

BY GRAPHIC PLOTTING ONLY, THIS PROPERTY IS LOCATED IN ZONE A8 & ZONE B, ON THE FLOOD INSURANCE RATE MAP, COMMUNITY PANEL NO. 2301450004B, WHICH BEARS AN EFFECTIVE DATE OF MAY 15, 1984.

Zoning Information

NONE PROVIDED

Possible Encroachments

(A) BUILDING ONTO ABUTTER 0.3'±

(B) CONCRETE PADS ONTO ABUTTER 3'–7'±

Plan References

1. "BOUNDARY & TOPOGRAPHIC SURVEY AT 59 ELM STREET & 10 GOOCH STREET, BIDDEFORD, MAINE MADE FOR PORT PROPERTY MANAGEMENT" DECEMBER 14, 2020 BY OWEN HASKELL, INC.

2. "ALTA/NSPS LAND TITLE SURVEY 59 ELM STREET, BIDDEFORD, MAINE PREPARED FOR PORT PROPERTY MANAGEMENT BY NORTH EAST CIVIL SOLUTIONS" DATED NOV. 4, 2020.

3. "ALTA/ACSM LAND TITLE SURVEY MADE FOR THE CITY OF BIDDEFORD, MAINE BY DOW & COULOMB, INC. LOCATED AT LINCOLN ST., ELM. ST. AND SACO RIVER" DATED NOV. 14, 2012.

4. "PLAN OF LAND OF THE SACO–LOWELL SHOPS AND PEPPERELL MANUFACTURING CO." BY LIBBY & DOW DATED JUNE, 1092 RECORDED IN PLAN BOOK 11, PAGE 31.

5. "PLAN SHOWING LAND SOLD BY THE BIDDEFORD & SACO DEVELOPMENT CORP. TO GRONDIN SUPPLY CO. INC." BY LIBBY & DOW DATED JAN. 18, 1962 RECORDED IN PLAN BOOK 32, PAGE 12.

Utility Note

THE UNDERGROUND UTILITIES SHOWN HAVE BEEN LOCATED FROM FIELD SURVEY INFORMATION AND EXISTING DRAWINGS. THE SURVEYOR MAKES NO GUARANTEES THAT THE UNDERGROUND UTILITIES SHOWN COMPRISE ALL SUCH UTILITIES IN THE AREA, EITHER IN SERVICE OR ABANDONED. THE SURVEYOR FURTHER DOES NOT WARRANT THAT THE UNDERGROUND UTILITIES SHOWN ARE IN THE EXACT LOCATION INDICATED ALTHOUGH HE DOES CERTIFY THAT THEY ARE LOCATED AS ACCURATELY AS POSSIBLE FROM INFORMATION AVAILABLE. THE SURVEYOR HAS NOT PHYSICALLY LOCATED THE UNDERGROUND UTILITIES. CALL 1–888–DIGSAFE AT LEAST THREE BUSINESS DAYS BEFORE PERFORMING ANY CONSTRUCTION. DUE TO OSHA CONFINED SPACE REQUIREMENTS, ALL INVERTS AND PIPE SIZES MUST BE VERIFIED PRIOR TO ANY CONSTRUCTION.

Legend

- IRON PIPE OR ROD FOUND
- UTILITY POLE
- MANHOLE
- EM ELECTRIC METER
- SIGN
- CATCH BASIN
- HYDRANT
- WATER VALVE OR SHUTOFF
- DECIDUOUS TREE
- FENCE
- CURB
- OHW OVERHEAD WIRES
- 100 1' CONTOUR
- SD STORM DRAIN
- C UNDERGROUND COMMUNICATIONS
- SS SANITARY SEWER
- W WATER LINE
- IPF/IRF IRON PIPE OR ROD FOUND
- N/F NOW OR FORMERLY
- 000/000 DEED BOOK / PAGE
- CONC. CONCRETE
- (1) SCHEDULE B EXCEPTION

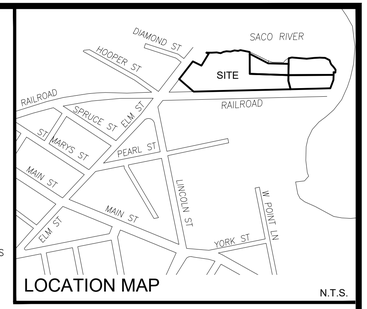

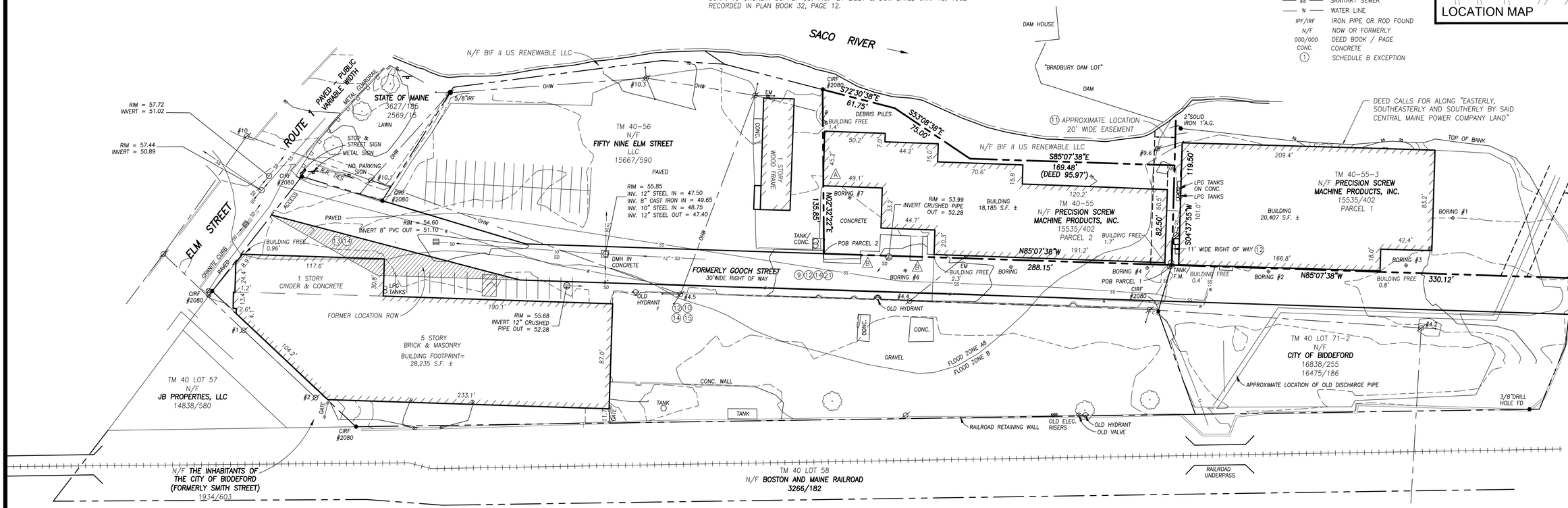

Legal Description

THE LAND REFERRED TO HEREIN IS SET FORTH BELOW:

PARCEL 1

A CERTAIN LOT OR PARCEL OF LAND WITH THE BUILDINGS THEREON, SITUATED IN BIDDEFORD, COUNTY OF YORK, STATE OF MAINE, BOUNDED AND DESCRIBED AS FOLLOWS:

BEGINNING AT A SPIKE DRIVEN INTO THE BITUMINOUS CONCRETE PAVEMENT AT THE SOUTHERLY CORNER OF LAND CONVEYED BY THE BIDDEFORD AND SACO DEVELOPMENT CORPORATION TO GRONDIN SUPPLY CO., INC., SAID SPIKE BEING A LINE WHICH IS FORTY–SEVEN (47) FEET NORTHEASTERLY FROM AND PARALLEL WITH THE NORTHEASTERLY FACE OF THE ORIGINAL BUILDINGS OF THE SACO–LOWELI SHOPS, AND FORMERLY KNOWN AS 30–A, B, C AND D; THENCE N 20° 04' E BY SAID GRONDIN LAND EIGHTY–TWO AND 50/100 (82.50) FEET TO A SPIKE DRIVEN INTO THE PAVEMENT, SAID LINE BEING PARALLEL WITH AND FIVE AND 88/100 (5.88) FEET NORTHWESTERLY OF THE NORTHWESTERLY FACE OF THE WATER TABLES ON THE PILASTERS EXISTING ON THE NORTHWESTERLY SIDE OF THE BRICK BUILDING STANDING ON THE LAND HEREBY CONVEYED FORMERLY KNOWN AS BUILDING #24; THENCE THE SAME COURSE BY REMAINING LAND OF THE BIDDEFORD AND SACO DEVELOPMENT CORPORATION OR OWNER, THIRTY–SEVEN (37) FEET, MORE OR LESS, OR TO LAND OF THE CENTRAL MAINE POWER COMPANY; THENCE EASTERLY, SOUTHEASTERLY AND SOUTHERLY BY SAID CENTRAL MAINE POWER COMPANY LAND TO A POINT IN SAID LINE WHICH IS FORTY–SEVEN (47) FEET NORTHEASTERLY FROM AND PARALLEL TO THE NORTHEASTERLY FACE OF SAID ORIGINAL BUILDINGS OF THE SACO–LOWELL SHOPS; THENCE N 69° 42' W BY SAID LINE THREE HUNDRED THIRTY AND 12/1.00 (330.12) FEET TO THE POINT OF BEGINNING.

THE ABOVE BEARINGS REFER TO THE 1929 MAGNETIC MERIDIAN.

ALSO TOGETHER WITH A RIGHT OF WAY FROM THE EASTERLY SIDELINE OF THE ABOVE DESCRIBED LOT WESTERLY TO ELM STREET, SAID RIGHT OF WAY TO BE ADJOINING SAID LOT ON THE SOUTHERLY SIDE AND TO BE THIRTY (30) FEET WIDE ALONG SAID LOT AND FOR SIX HUNDRED SIXTY AND 82/100 (660.82) FEET WESTERLY FROM THE SOUTHWESTERLY CORNER OF SAID LOT TO A LARGE SPIKE DRIVEN INTO THE BITUMINOUS CONCRETE PAVING. FROM THENCE THE NORTHERLY SIDELINE RUNS N 32° 55' W BY LAND FORMERLY OF THE BIDDEFORD AND SACO DEVELOPMENT CORPORATION EIGHTY–THREE AND 751100 (83.75) FEET TO ELM STREET WHERE SAID RIGHT OF WAY IS TO BE FORTY AND 8811 00 (40.88) FEET WIDE MEASURED ALONG SAID ELM STREET, SAID LAST DESCRIBED RIGHT OF WAY IS TO BE USED BY PRECISION SCREW MACHINE PRODUCTS, INC. AND THE BIDDEFORD AND SACO DEVELOPMENT CORPORATION, THEIR RESPECTIVE SUCCESSORS AND
ASSIGNS AND OTHERS.

PARCEL 2

A CERTAIN LOT OR PARCEL OF LAND TOGETHER WITH THE BUILDINGS THEREON, SITUATED IN SAID BIDDEFORD, BOUNDED AND DESCRIBED AS FOLLOWS:

BEGINNING AT A SPIKE DRIVEN INTO THE BITUMINOUS CONCRETE PAVEMENT AT THE JUNCTION OF A LINE WHICH IS FORTY–SEVEN (47) FEET NORTHEASTERLY FROM AND PARALLEL WITH THE NORTHEASTERLY FACE OF THE MAIN ORIGINAL BUILDINGS OF THE SACO–LOWELL SHOPS AND FORMERLY KNOWN AS 30–A, B, C AND D AND A LINE WHICH RUNS ALONG THE NORTHWESTERLY EDGE OF THE CONCRETE PLATFORM ON WHICH THE BUILDING FORMERLY KNOWN AS #33 STOOD; THENCE S 69° 42' E BY SAID FORTY–SEVEN (47) FOOT LINE TWO HUNDRED EIGHTY–EIGHT AND 15/100 (288.15) TO A SPIKE DRIVEN IN THE PAVEMENT AND RETAINING LAND OF BIDDEFORD & SACO DEVELOPMENT CORPORATION; THENCE N 20° 04' E BY SAID REMAINING LAND OF BIDDEFORD & SACO DEVELOPMENT CORPORATION EIGHTY–TWO AND 50/100 (82.50) FEET TO A SPIKE DRIVEN INTO THE PAVEMENT; THE LAST DESCRIBED LINE BEING PARALLEL WITH AND FIVE AND 88/100 (5.88) FEET NORTHWESTERLY OF THE NORTHWESTERLY FACE OF THE WATER TABLES ON THE PILASTERS EXISTING ON THE NORTHWESTERLY SIDE OF THE BRICK BUILDING STANDING ON SAID OTHER LAND OF BIDDEFORD & SACO DEVELOPMENT CORPORATION FORMERLY KNOWN AS BUILDING #24; THENCE N 69° 42' W BY REMAINING LAND OF SAID BIDDEFORD & SACO DEVELOPMENT CORPORATION AND BY LAND OF THE CENTRAL MAINE POWER COMPANY NINETY–FIVE AND 97/100 (95.97) FEET TO AN IRON PIPE DRIVEN INTO THE GROUND; THENCE N 37° 43' W BY SAID LAND OF THE CENTRAL MAINE POWER COMPANY SEVENTY–FIVE (75) FEET TO AN IRON PIPE DRIVEN INTO THE GROUND; THENCE N 57° 05' W BY SAID LAND OF THE CENTRAL MAINE POWER COMPANY SIXTY–ONE AND 75/100 (61.75) FEET TO AN IRON PIPE DRIVEN INTO THE GROUND AND REMAINING LAND OF SAID BIDDEFORD & SACO DEVELOPMENT CORPORATION; THENCE S 17° 58' W BY SAID REMAINING LAND OF BIDDEFORD & SACO DEVELOPMENT CORPORATION ONE HUNDRED THIRTY–FIVE AND 84/100 (135.84) FEET TO THE POINT OF BEGINNING.

Schedule B Section II Exceptions

FIRST AMERICAN TITLE INSURANCE COMPANY
COMMITMENT NO. 111220–01 EFFECTIVE DATE: NOVEMBER 5, 2020

1 – 8. NON SURVEY ITEMS

9. RIGHTS, EASEMENTS, COVENANTS, CONDITIONS, AND RESTRICTIONS SET FORTH IN QUITCLAIM DEED GRANTED BY SACO–LOWELL SHOPS TO BIDDEFORD & SACO DEVELOPMENT CORPORATION DATED APRIL 9, 1959 AND RECORDED IN THE YORK COUNTY REGISTRY OF DEEDS IN BOOK 1398, PAGE 145. – AS SHOWN

10. RIGHTS AND EASEMENTS GRANTED BY BIDDEFORD & SACO DEVELOPMENT CORPORATION TO CENTRAL MAINE POWER COMPANY BY INSTRUMENT DATED MARCH 22, 1961 AND RECORDED IN THE YORK COUNTY REGISTRY OF DEEDS IN BOOK 1461, PAGE 460. –NO POLE NUMBERED REFERENCED IN DOCUMENT, EXISTING POLES SHOWN

11. RIGHTS AND EASEMENTS GRANTED BY BIDDEFORD & SACO DEVELOPMENT CORPORATION TO CENTRAL MAINE POWER COMPANY BY INSTRUMENT SACO–LOWELL SHOPS TO CENTRAL MAINE POWER COMPANY BY INSTRUMENT DATED JUNE 23, 1944 AND RECORDED IN THE YORK COUNTY REGISTRY OF DEEDS IN BOOK 1017, PAGE 409.

12. RIGHTS, EASEMENTS, COVENANTS, CONDITIONS, AND TERMS SET FORTH IN DEED GRANTED BY BIDDEFORD & SACO DEVELOPMENT CORPORATION TO GRONDIN SUPPLY CO. INC. DATED JANUARY 18, 1962 AND RECORDED IN THE YORK COUNTY REGISTRY OF DEEDS IN BOOK 1478, PAGE 465. –AS SHOWN

13. RIGHTS OF OTHERS AND TERMS AND CONDITIONS PURSUANT TO THE FOLLOWING:

A. AGREEMENT BY AND BETWEEN CENTRAL MAINE POWER COMPANY AND STORAGE REALTY CORP., DATED APRIL 1, 1971 AND RECORDED IN THE YORK COUNTY REGISTRY OF DEEDS IN BOOK 1907, PAGE 182; – AS SHOWN

B. AGREEMENT BY AND BETWEEN BIDDEFORD & SACO DEVELOPMENT CORPORATION AND STORAGE REALTY CORP., DATED MARCH 10, 1971 AND RECORDED IN THE YORK COUNTY REGISTRY OF DEEDS IN BOOK 1907, PAGE 186; – AS SHOWN

C. AGREEMENT BY AND BETWEEN METAL–TECH INC. AND STORAGE REALTY CORP., DATED MARCH 25, 1971 AND RECORDED IN THE YORK COUNTY REGISTRY OF DEEDS IN BOOK 1907, PAGE 190; AND – AS SHOWN

D. AGREEMENT BY AND BETWEEN GRONDIN SUPPLY CO. AND STORAGE REALTY CORP. DATED MARCH 23, 1971 AND RECORDED IN THE YORK COUNTY REGISTRY OF DEEDS IN BOOK 1907, PAGE 195. – AS SHOWN

14. RIGHTS, EASEMENTS, CONDITIONS, AND RESTRICTIONS SET FORTH IN WARRANTY DEED GRANTED BY METAL–TECH INC. DATED JANUARY 2, 1974 AND RECORDED IN THE YORK COUNTY REGISTRY OF DEEDS IN BOOK 2023, PAGE 253. – AS SHOWN

15. RIGHTS AND EASEMENTS GRANTED BY PRECISION SCREW MACHINE PRODUCTS INC. TO CENTRAL MAINE POWER AND NEW ENGLAND TELEPHONE AND TELEGRAPH COMPANY BY INSTRUMENT DATED AND RECORDED IN THE YORK COUNTY REGISTRY OF DEEDS 2375, PAGE 50. – AS SHOWN

16. EASEMENT DEED GRANTED BY PRECISION SCREW MACHINE PRODUCTS, INC. TO MAINE ENERGY RECOVERY COMPANY DATED APRIL 14, 1987 AND RECORDED IN THE YORK COUNTY REGISTRY OF DEEDS IN BOOK 4248, PAGE 112.

17. RIPARIAN RIGHTS OF OTHERS IN AND TO THE SACO RIVER AS THE SAME PASSES THROUGH OR BY THE INSURED PREMISES. – NOT PLOTTABLE

18. SUCH STATE OF FACTS INCLUDING NOTES DISCLOSED ON PLAN ENTITLED "PLAN OF LAND OF THE SACO–LOWELL SHOPS AND THE PEPPERELL MANUFACTURING CO., BIDDEFORD, MAINE, PREPARED BY LIBBY & DOW ENGINEER'S DATED JUNE, 1929, LAST REVISED APRIL 24, 1930 AND RECORDED IN THE YORK COUNTY REGISTRY OF DEEDS IN PLAN BOOK 11, PAGE 31. – ALL PERTINENT INFORMATION SHOWN HEREON

19. SUCH STATE OF FACTS INCLUDING NOTES DISCLOSED ON UNRECORDED PLAN ENTITLED "PLAN SHOWING LAND SURVEYED FOR MAINE ENERGY RECOVERY COMPANY" BY DOWN & COULOMBE INC. DATED JANUARY 15, 1985 WITH FINAL REVISION DATED OF JANUARY 30, 1985. – ALL PERTINENT INFORMATION SHOWN HEREON

20. SUCH STATE OF FACTS INCLUDING NOTES DISCLOSED ON PLAN ENTITLED "PLAN SHOWING LAND SOLD BY BIDDEFORD & SACO DEVELOPMENT CORP. TO GRONDIN SUPPLY CO. INC., PREPARED BY LIBBY & DOW ENGINEERS, DATED JANUARY 18, 1962 AND RECORDED IN THE YORK COUNTY REGISTRY OF DEEDS IN PLAN BOOK 32, PAGE 12. – ALL PERTINENT INFORMATION SHOWN HEREON

21. RIGHTS OF OTHERS IN AND TO THE APPURTENANT EASEMENTS KNOWN AS GOOCH STREET TO BE INSURED. – AS SHOWN

SCALE : 1" = 40'
0' 20' 40' 80'

ALTA / NSPS Land Title Survey

59 Elm Street & 10 Gooch Street
Biddeford, York County, Maine
Made For
Port Property Management, Inc.
188 State Street, Suite 303, Portland, Maine

Surveyor's Certification

TO: PORT PROPERTY MANAGEMENT, INC., AND FIRST AMERICAN TITLE INSURANCE COMPANY

THIS IS TO CERTIFY THAT THIS MAP OR PLAT AND THE SURVEY ON WHICH IT IS BASED WERE MADE IN ACCORDANCE WITH THE 2016 MINIMUM STANDARD DETAIL REQUIREMENTS FOR ALTA/NSPS LAND TITLE SURVEYS, JOINTLY ESTABLISHED AND ADOPTED BY ALTA AND NSPS, AND INCLUDES ITEMS 1, 2, 3, 4, 5, 6(A), 11, 13, 14, 16, 17, 19 AND 21 OF TABLE A THEREOF. THE FIELD WORK WAS COMPLETED ON , 2018.

RANDY R. LOUBIER
PROFESSIONAL LAND SURVEYOR NO. 2407

DATE OF PLAT OR MAP: DECEMBER 18, 2020
DATE OF LAST REVISION:

OWEN HASKELL, INC.
PROFESSIONAL LAND SURVEYORS
390 U.S. ROUTE 1, UNIT 10, FALMOUTH, ME 04105 TEL. 207-774-0424

DRAWN BY:	RRL / JLW	FIELD BOOK:	FILE	JOB NO.	2020-295 B-Y
CHECKED BY:	RRL	SCALE:	1" = 40'	DRWG. NO.	1

VICINITY MAP
N.T.S.

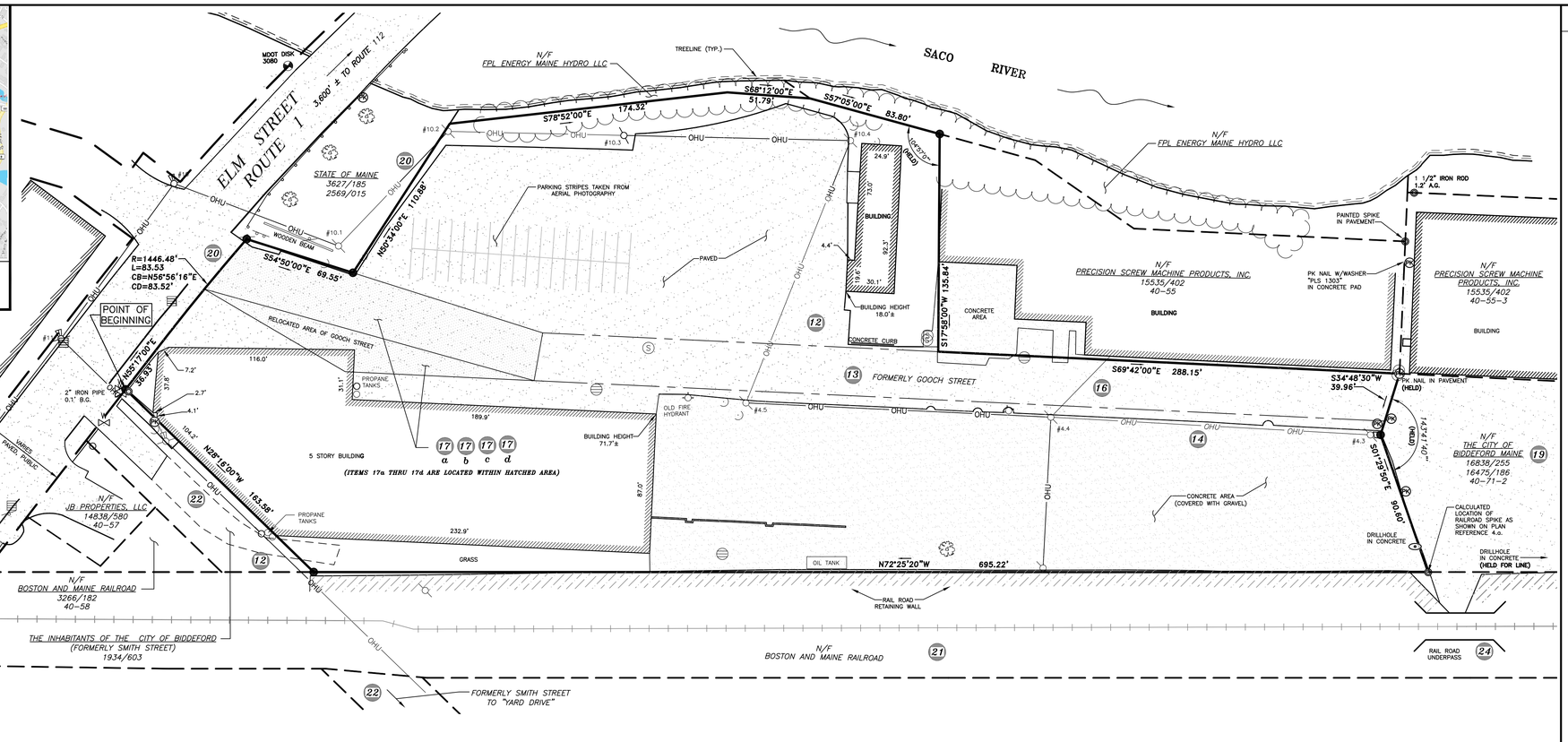

NOTES

1. RECORD OWNER OF THE PARCEL SURVEYED IS FIFTY NINE ELM STREET, LLC, AS DESCRIBED IN A DEED FROM PIONEER CAPITAL CORPORATION, DATED JUNE 24, 2009 AND RECORDED IN BOOK 15667, PAGE 590 IN THE YORK COUNTY REGISTRY OF DEEDS.

   TOTAL LOT AREA IS: 3.64± Ac.

2. THE PARCEL SURVEYED IS IDENTIFIED ON THE CITY OF BIDDEFORD TAX ASSESSOR'S MAP 40, PARCEL 56.

3. THE BEARINGS SHOWN ON THIS PLAN ARE BASED ON MAGNETIC NORTH 1929. TAKEN FROM PLAN REFERENCE 4.c.

4. PLAN REFERENCES:
   a. "STANDARD BOUNDARY AND TOPOGRAPHIC SURVEY FOR RAYMOND E. CRONKITE" BY OEST ASSOCIATES, INC., DATED NOVEMBER, 2002 (MARCH 15, 2006) UNRECORDED.

   b. "ALTA/ACSM LAND TITLE SURVEY (URBAN) FOR MAINE ENERGY RECOVERY COMPANY" BY DOW & COULOMBE, INC., DATED MARCH 1, 1996 (REV. APRIL 29, 1996) UNRECORDED.

   c. "PLAN OF LAND OF THE SACO–LOWELL SHOPS AND THE PEPPERELL MANUFACTURING CO." BY LIBBY & DOW, ENG'RS, DATED JUNE, 1929 (REV. FEBRUARY 21, 1930) RECORDED IN PLAN BOOK 11, PAGE 31.

   d. "MAINE DEPARTMENT OF TRANSPORTATION, RIGHT OF WAY MAP, STATE HIGHWAY "1", FEDERAL AID PROJECT NO. BR–01–1(74)" DATED JANUARY, 1985, UPDATED MAY, 1985, D.O.T. FILE NO. 16289, RECORDED IN PLAN BOOK 161, PAGE 16.

   e. "PLAN SHOWING LAND SOLD BY THE BIDDEFORD & SACO DEVELOPMENT CORP. TO GRONDIN SUPPLY CO. INC." BY LIBBY & DOW–ENG'RS, DATED JANUARY 18, 1962, RECORDED IN PLAN BOOK 32, PAGE 12.

   f. "PLAN SHOWING LAND SURVEYED FOR MAINE ENERGY RECOVERY COMPANY" BY DOW & COULOMBE, INC., DATED JANUARY 15, 1985, RECORDED IN PLAN BOOK 134, PAGE 28.

   g. "SACO–LOWELL SHOPS SACO & BIDDEFORD, MAINE" SURVEYED BY H.H. WEST, TRACING BY C.M. LIDDEN, SURVEYED JULY 26, 1949, LAST REVISED MARCH 27 1958, UNRECORDED.

   h. "STATION MAP–LANDS, BOSTON AND MAINE R.R. OPERATED BY THE BOSTON AND MAINE R.R. STATION 5212+40 TO STATION 5265+20" DATED JUNE 30, 1914, PLAN NUMBER V2ME/SL98, UNRECORDED.

5. THE WIDTH OF ELM STREET VARIES BASED ON PLAN REFERENCE 4.d. THE LAYOUT OF THE RIGHT–OF–WAY LIMITS IS BASED ON PLAN REFERENCE 4.d. AND MONUMENTATION FOUND.

6. REFERENCE IS MADE TO THE FOLLOWING EASEMENTS OF RECORD:
   (SEE SCHEDULE B–II EXCEPTIONS)

7. AS OF THE ORIGINAL DATE OF THIS PLAN, THE PARCEL SURVEYED IS LOCATED IN THE MSRD3 ZONE. PORTIONS OF BULK & SPACE REQUIREMENTS ARE AS FOLLOWS:
   MINIMUM LOT AREA = N/A (SEE BIDDEFORD ESTABLISHMENT OF ZONES–TABLE B)
   MINIMUM FRONTAGE = NONE
   SETBACKS:
   FRONT = NONE
   SIDE = NONE
   REAR = NONE
   OTHER MUNICIPAL AND STATE OVERLAY ZONES MAY EXIST AND APPLY. BEFORE PROCEEDING ON ANY PROJECT WE RECOMMEND VERIFYING CURRENT ZONE AND ALL APPLICABLE SETBACKS AND RESTRICTIONS WITH THE APPROPRIATE AGENCIES.

8. THE UTILITIES SHOWN ON THIS PLAN WERE FROM FIELD OBSERVATION ONLY. THERE MAY BE OTHER UTILITIES EXISTING THAT ARE NOT SHOWN. CONTACT DIG–SAFE (888)DIG–SAFE PRIOR TO ANY EXCAVATION WORK.

9. RIPARIAN RIGHTS BETWEEN HIGH WATER AND LOW WATER WERE NOT DETERMINED DURING THIS SURVEY.

10. THE PROPERTY DESCRIBED IN TITLE COMMITMENT FOR NO. 091620–01, EFFECTIVE DATE OF SEPTEMBER 8, 2020, IS THE SAME AS THE PROPERTY SHOWN HEREON.

11. TO THE BEST OF OUR KNOWLEDGE, BASED ON EXISTING MONUMENTATION FOUND, PLANS REFERENCED IN NOTE 4 AND RESEARCH CONDUCTED, THERE ARE NO GAPS OR GORES IN THE LOCUS PARCEL.

SCHEDULE B–II EXCEPTIONS

1–8 – ITEMS ARE NOT SURVEY MATTERS.

9 SUCH STATE OF FACTS INCLUDING NOTES DISCLOSED ON PLAN ENTITLED "PLAN OF LAND OF THE SACO–LOWELL SHOPS AND THE PEPPERELL MANUFACTURING CO., BIDDEFORD, MAINE," PREPARED BY LIBBY & DOW ENGINEERS DATED JUNE, 1929, LAST REVISED APRIL 24, 1930.

– AS SHOWN ON ABOVE REFERENCED PLAN.

10 SUCH STATE OF FACTS INCLUDING NOTES DISCLOSED ON UNRECORDED PLAN ENTITLED "PLAN SHOWING LAND SURVEYED FOR MAINE ENERGY RECOVER COMPANY" BY DOWN & COULOMBE INC. DATED JANUARY 15, 1983 WITH FINAL REVISION DATE OF OCTOBER 4, 1986.

– AS SHOWN IN ABOVE REFERENCED PLAN.

11 SUCH STATE OF FACTS INCLUDED NOTES DISCLOSED ON PLAN ENTITLED "PLAN SHOWING LAND SOLD BY BIDDEFORD & SACO DEVELOPMENT CORP. TO GRONDIN SUPPLY CO. INC., PREPARED BY LIBBY & DOW ENGINEERS, DATED JANUARY 18, 1962 AND RECORDED IN THE YORK COUNTY REGISTRY OF DEEDS IN PLAN BOOK 32, PAGE 12.

– AS SHOWN IN ABOVE REFERENCED PLAN.

12 COVENANTS, CONDITIONS, AND RESTRICTIONS, TOGETHER WITH THE RIGHTS AND EASEMENTS GRANTED TO OTHERS OR RESERVED IN INDENTURE BY AND BETWEEN BIDDEFORD & SACO DEVELOPMENT CORPORATION AND GRAFTON LUMBER COMPANY DATED APRIL 6, 1962 AND RECORDED IN THE YORK COUNTY REGISTRY OF DEEDS IN BOOK 1484, PAGE 121.

– A PORTION OF THE ABOVE IS SHOWN ON THIS PLAN.

13 RIGHTS OF OTHERS IN AND TO THE USE OF THE PRIVATE WAY KNOWN AS GOOCH STREET LOCATED WITHIN THE BOUNDARIES OF THE INSURED LAND.

– LOCATION SHOWN ON THIS PLAN.

14 RIGHTS AND EASEMENTS GRANTED BY STORAGE REALTY CORPORATION TO CENTRAL MAINE POWER COMPANY AND NEW ENGLAND TELEPHONE AND TELEGRAPH COMPANY BY INSTRUMENT DATED JANUARY 23, 1970 AND RECORDED IN THE YORK COUNTY REGISTRY OF DEEDS IN BOOK 1489, PAGE 500.

– LOCATION SHOWN ON THIS PLAN.

15 RIGHTS AND EASEMENTS GRANTED BY STORAGE REALTY CORPORATION TO CENTRAL MAINE POWER COMPANY AND NEW ENGLAND TELEPHONE AND TELEGRAPH COMPANY BY INSTRUMENT DATED NOVEMBER 17, 1969 AND RECORDED IN THE YORK COUNTY REGISTRY OF DEEDS IN BOOK 1489, PAGE 501.

– POLE #9.4 (ELM STREET) AND POLE #9.41 NOT FOUND DURING THIS SURVEY.

16 RIGHTS AND EASEMENTS GRANTED BY STORAGE REALTY CORPORATION TO CENTRAL MAINE POWER COMPANY AND NEW ENGLAND TELEPHONE AND TELEGRAPH COMPANY BY INSTRUMENT DATED FEBRUARY 2, 1970 AND RECORDED IN THE YORK COUNTY REGISTRY OF DEEDS IN BOOK 1871, PAGE 442.

– LOCATION SHOWN ON THIS PLAN.

RIGHTS, EASEMENTS, COVENANTS, CONDITIONS, AND RESTRICTIONS SET FORTH IN THE FOLLOWING:

17a AGREEMENT BY AND BETWEEN CENTRAL MAINE POWER COMPANY AND STORAGE REALTY CORP. DATED MARCH 18, 1971 AND RECORDED IN THE YORK COUNTY REGISTRY OF DEEDS IN BOOK 1907, PAGE 182.

– LOCATION SHOWN ON THIS PLAN.

17b AGREEMENT BY AND BETWEEN BIDDEFORD & SACO DEVELOPMENT CORPORATION AND STORAGE REALTY CORP. DATED MARCH 18, 1971 AND RECORDED IN THE YORK COUNTY REGISTRY OF DEEDS IN BOOK 1907, PAGE 186.

– LOCATION SHOWN ON THIS PLAN.

17c AGREEMENT BY AND BETWEEN METAL–TECH INC. AND STORAGE REALTY CORP. DATED MARCH 25, 1971 AND RECORDED IN THE YORK COUNTY REGISTRY OF DEEDS IN BOOK 1907, PAGE 190.

– LOCATION SHOWN ON THIS PLAN.

17d AGREEMENT BY AND BETWEEN GRONDIN SUPPLY CO. AND STORAGE REALTY CORP. DATED MARCH 18, 1971 AND RECORDED IN THE YORK COUNTY REGISTRY OF DEEDS IN BOOK 1907, PAGE 195.

– LOCATION SHOWN ON THIS PLAN.

18 RIGHTS AND EASEMENTS SET FORTH IN QUITCLAIM DEED WITH COVENANT GRANTED BY STORAGE REALTY CORP. TO THE CITY OF BIDDEFORD DATED OCTOBER 29, 1984 AND RECORDED IN THE YORK COUNTY REGISTRY OF DEEDS IN BOOK 3403, PAGE 20.

– NOT LOCATED WITHIN LOCUS PARCEL.

SCHEDULE B–II EXCEPTIONS CONTINUED

19 RIGHTS AND EASEMENTS SET FORTH IN QUITCLAIM DEED WITH COVENANT GRANTED BY STORAGE REALTY CORP. TO MAINE ENERGY RECOVERY COMPANY DATED AUGUST 13, 1985 AND RECORDED IN THE YORK COUNTY REGISTRY OF DEEDS IN BOOK 3611, PAGE 161.

– LOCATION SHOWN ON THIS PLAN.

20 NOTICE OF LAYOUT AND TAKING BY THE STATE OF MAINE BY ITS DEPARTMENT OF TRANSPORTATION DATED AUGUST 27, 1985 AND RECORDED IN THE YORK COUNTY REGISTRY OF DEEDS IN BOOK 3627, PAGE 185

– LOCATION SHOWN ON THIS PLAN.

21 LAND OF BOSTON & MAINE R.R.

– LOCATION SHOWN ON THIS PLAN.

22 RIGHTS OF OTHERS IN AND TO THE USE OF SMITH STREET.

– SEE SMITH STREET SHOWN ON THIS PLAN.

23 RIPARIAN RIGHTS OF OTHERS; THE FINAL POLICY WILL NOT ENSURE THE STATUS OF RIPARIAN RIGHTS OF THE OWNER OF THE INSURED PREMISES.

– RIPARIAN RIGHTS NOT DETERMINED AS PART OF THIS SURVEY.

24 TITLE TO AND RIGHTS OF OTHERS IN AND TO THE UNDERPASS WHICH CROSSES THE BOSTON & MAINE R.R.

– LOCATION OF AN UNDERPASS IS SHOWN ON THIS PLAN.

SURVEY LEGAL DESCRIPTION

A CERTAIN LOT, OR PARCEL OF LAND, LOCATED ON THE SOUTHERLY SIDE OF ELM STREET, IN THE CITY OF BIDDEFORD, COUNTY OF YORK, STATE OF MAINE, BEING BOUND AND DESCRIBED AS FOLLOWS:

BEGINNING ON THE SOUTHERLY SIDE OF ELM STREET, AT A PROPOSED MAG NAIL W/WASHER STAMPED "NCS 2080" TO BE SET AT THE INTERSECTION OF THE SOUTHERLY SIDE OF ELM STREET AND THE EASTERLY SIDE OF LAND NOW OR FORMERLY (N/F) THE INHABITANTS OF THE CITY OF BIDDEFORD (BEING A PORTION OF LAND FORMALLY KNOWN AS SMITH STREET), AS DESCRIBED IN BOOK 1934, PAGE 603;

THENCE: N 55°17'00" E, ALONG SAID ELM STREET, 36.93', TO A POINT;

THENCE: FOLLOWING A CURVE TO THE RIGHT, ALONG SAID ELM STREET, HAVING A RADIUS OF 1446.48', AN ARC LENGTH OF 83.53', A CHORD BEARING OF N 56°56'16" E, AND A CHORD DISTANCE OF 83.52', TO A PROPOSED #5 REBAR W/ CAP STAMPED "NCS 2080" TO BE SET;

THENCE: S 54°50'00" E, ALONG LAND N/F STATE OF MAINE, AS DESCRIBED IN BOOK 3569, PAGE 015, 69.55', TO A PROPOSED #5 REBAR W/CAP STAMPED "NCS 2080" TO BE SET;

THENCE: N 50°34'00" E, ALONG SAID STATE OF MAINE, 110.88', TO LAND N/F FPL ENERGY MAINE HYDRO LLC;

THENCE: S 78°52'00" E, ALONG SAID FPL ENERGY MAINE HYDRO LLC, 174.32', TO A POINT;

THENCE: S 68°12'00" E, ALONG SAID FPL ENERGY MAINE HYDRO LLC, 51.79', TO A POINT;

THENCE: S 57°05'00" E, ALONG SAID FPL ENERGY MAINE HYDRO LLC, 83.80', TO A PROPOSED #5 REBAR W/CAP STAMPED "NCS 2080" TO BE SET;

THENCE: S 17°58'00" W, ALONG LAND N/F PRECISION SCREW MACHINE PRODUCTS, INC., AS DESCRIBED IN BOOK 15535, PAGE 402, 135.84', TO A POINT;

THENCE: S 69°42'00" E, ALONG SAID PRECISION SCREW MACHINE PRODUCTS, INC., 288.15', TO A P/K NAIL FOUND;

THENCE: S 34°48'30" W, ALONG LAND N/F CITY OF BIDDEFORD, MAINE AS DESCRIBED IN BOOK 16838, PAGE 255 AND BOOK 16475, PAGE 186, 39.96', TO A PROPOSED #5 REBAR W/CAP STAMPED "NCS 2080" TO BE SET;

THENCE: S 01°29'50" E, ALONG SAID CITY OF BIDDEFORD, MAINE 90.60', TO A POINT;

THENCE: N 72°25'20" W, ALONG LAND N/F BOSTON AND MAINE RAILROAD, 695.22', TO A PROPOSED #5 REBAR W/CAP STAMPED "NCS 2080" TO BE SET;

THENCE: N 28°16'00" W, ALONG SAID CITY OF BIDDEFORD, MAINE 163.58', TO THE POINT OF BEGINNING.

THE ABOVE DESCRIBED PARCEL CONTAINS 3.64 ACRES, MORE OR LESS.

LEGEND

●	NEW PROPERTY MARKER (PROPOSED)
◉	FOUND IRON (SIZE & TYPE AS NOTED)
⊕	FOUND DRILL HOLE
	UTILITY POLE (NUMBER AS NOTED)
	GUY WIRE ANCHOR
	FOUND DECIDUOUS TREE (SIZE & TYPE AS NOTED)
	BOUNDARY LINE
	EASEMENT LINE
	EDGE OF WATER
	EDGE OF GRAVEL
	EDGE OF PAVEMENT
	RIGHT–OF–WAY LINE
	ABUTTER LINE
	OVERHEAD UTILITY
	FORMER DEED LINES
N/F	NOW OR FORMERLY OWNED BY
1234/567	DEED BOOK AND PAGE
12–34	TAX MAP–LOT
(123.45)	PARENTHESIS DENOTE RECORD DATA

FLOOD ZONE CRITERIA

COUNTY: YORK
COMMUNITY: BIDDEFORD
COMM NO: 230145
PANEL NO: 0004 B
EFFECTIVE DATE: MAY 15, 1984

FLOOD ZONE: PORTIONS BELOW ELEVATION 57 ARE WITHIN FLOOD ZONE AB
REMAINDER OF AREA IS IN FLOODZONE B

ALTA CERTIFICATION

CATIC TITLE INSURANCE COMPANY
TITLE NO. 091620–01
EFFECTIVE DATE: SEPTEMBER 8, 2020

TO: TOM WATSON & CO., LLC, ITS SUCCESSORS AND ASSIGNS LENDER AND CATIC TITLE INSURANCE COMPANY AND THE SUCCESSORS AND ASSIGNS OF EACH:

THIS IS TO CERTIFY THAT THIS MAP OR PLAT AND THE SURVEY ON WHICH IT IS BASED WERE MADE IN ACCORDANCE WITH THE 2016 MINIMUM STANDARD DETAIL REQUIREMENTS FOR ALTA/NSPS LAND TITLE SURVEYS, JOINTLY ESTABLISHED AND ADOPTED BY ALTA AND NSPS AND INCLUDES ITEMS 1, 2, 3, 4, 6b, 7a & b(1), 8, 9, 11, 13, 14, 16, 17, 19, 20 AND 21 OF TABLE A THEREOF. THE FIELDWORK WAS COMPLETED ON 10/19/2020.

DATE OF PLAT OR MAP:
10/28/2020

Preliminary

TROY F. McDONALD — DATE
MAINE PROFESSIONAL LAND SURVEYOR. No. 2080

Revision:	By:	Date:	Change:

PROJECT: 42267	DRAWING NAME: 42267.dwg		
ISSUED: OCTOBER 28, 2020	SCALE: 1"=40'	FB # 438	DRAWN BY: ASF
FIELDED BY: ASF/CJB	FIELD DATE: 10/19/2020		CHECKED BY: DMM/TFM

Drawing Name and Location:
ALTA/NSPS LAND TITLE SURVEY
59 ELM STREET, BIDDEFORD, MAINE

Owner:
FIFTY NINE ELM STREET, LLC
380 WARREN AVENUE, PORTLAND, MAINE

Prepared For:
PORT PROPERTY MANAGEMENT

SURVEYING • ENGINEERING • LAND PLANNING
Northeast Civil Solutions
INCORPORATED
381 PAYNE ROAD, SCARBOROUGH, MAINE 04074
tel 207.883.1000 fax 207.883.1001
e–mail / website
info@northeastcivilsolutions.com
www.northeastcivilsolutions.com

0 40' 80' 160'

STAMP AND SIGNATURE

Preliminary

TROY F. McDONALD — DATE
MAINE PROFESSIONAL LAND SURVEYOR. No. 2080

E:\Land Projects\42000\42267 Port Property Management–Biddeford\dwg\42267.dwg

VICINITY MAP
N.T.S.

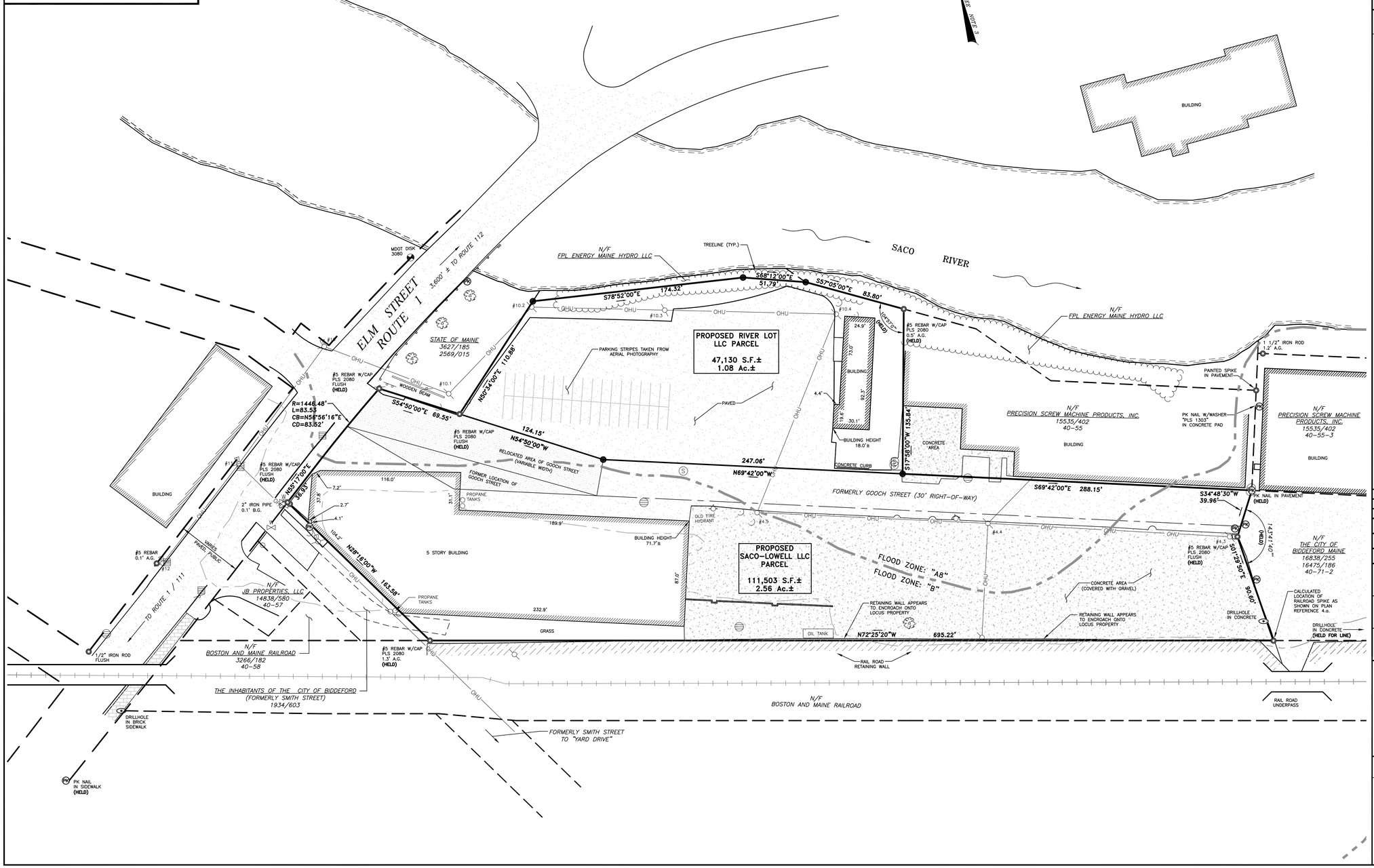

LEGEND

- #5 REBAR WITH CAP (PROPOSED)
- FOUND IRON (SIZE & TYPE AS NOTED)
- FOUND DRILL HOLE
- UTILITY POLE (NUMBER AS NOTED)
- GUY WIRE ANCHOR
- FOUND DECIDUOUS TREE (SIZE & TYPE AS NOTED)
- BOUNDARY LINE
- EASEMENT LINE
- EDGE OF WATER
- EDGE OF GRAVEL
- EDGE OF PAVEMENT
- RIGHT-OF-WAY LINE
- ABUTTER LINE
- OHU — OVERHEAD UTILITY
- FORMER DEED LINES
- N/F — NOW OR FORMERLY OWNED BY
- 1234/567 — DEED BOOK AND PAGE
- 12-34 — TAX MAP-LOT
- (123.45') — PARENTHESIS DENOTE RECORD DATA

NOTES

1. RECORD OWNER OF THE PARCEL SURVEYED IS FIFTY NINE ELM STREET, LLC, AS DESCRIBED IN A DEED FROM PIONEER CAPITAL CORPORATION, DATED JUNE 24, 2009 AND RECORDED IN BOOK 15667, PAGE 590 IN THE YORK COUNTY REGISTRY OF DEEDS.

   TOTAL LOT AREA IS: 3.64± Ac.

2. THE PARCEL SURVEYED IS IDENTIFIED ON THE CITY OF BIDDEFORD TAX ASSESSOR'S MAP 40, PARCEL 56.

3. THE BEARINGS SHOWN ON THIS PLAN ARE BASED ON MAGNETIC NORTH 1929. TAKEN FROM PLAN REFERENCE 4.a.

4. PLAN REFERENCES:
   a. "ALTA / NSPS LAND TITLE SURVEY, 59 ELM STREET, BIDDEFORD, MAINE" BY NORTHEAST CIVIL SOLUTIONS, INC., DATED NOVEMBER 4, 2020, LAST REVISED NOVEMBER 20,2020, NCS PROJECT NO. 42267.

5. THE WIDTH OF ELM STREET VARIES BASED ON PLAN REFERENCE 4.d. THE LAYOUT OF THE RIGHT-OF-WAY LIMITS IS BASED ON PLAN REFERENCE 4.d. AND MONUMENTATION FOUND.

6. REFERENCE IS MADE TO THE FOLLOWING EASEMENTS OF RECORD:
   (SEE SCHEDULE B-II EXCEPTIONS)

7. THE UTILITIES SHOWN ON THIS PLAN WERE FROM FIELD OBSERVATION ONLY. THERE MAY BE OTHER UTILITIES EXISTING THAT ARE NOT SHOWN. CONTACT DIG-SAFE (888)DIG-SAFE PRIOR TO ANY EXCAVATION WORK.

8. RIPARIAN RIGHTS BETWEEN HIGH WATER AND LOW WATER WERE NOT DETERMINED DURING THIS SURVEY.

Revision:	By:	Date:	Change:

PROJECT: 42267	DRAWING NAME: 42267 Lot Split.dwg
ISSUED: DECEMBER 15, 2020	SCALE: 1"=40' FB # 438 DRAWN BY: JAP
FIELDED BY: ASF / CJB	FIELD DATE: 10/19/2020 CHECKED BY: DMM / TFM

Drawing Name and Location:
LOT SPLIT PLAN
59 ELM STREET, BIDDEFORD, MAINE

Owner:
FIFTY NINE ELM STREET, LLC
380 WARREN AVENUE, PORTLAND, MAINE 04101

Prepared For:
PORT PROPERTY MANAGEMENT

SURVEYING • ENGINEERING • LAND PLANNING
Northeast Civil Solutions
INCORPORATED
381 PAYNE ROAD, SCARBOROUGH, MAINE 04074
tel 207.883.1000 fax 207.883.1001
e-mail / website
info@northeastcivilsolutions.com
www.northeastcivilsolutions.com

0 1' 2' 4'

STAMP AND SIGNATURE

Preliminary

TROY F. McDONALD
MAINE PROFESSIONAL LAND SURVEYOR No. 2080

DATE

E:\Land Projects\42000\27777\dwg\27777.dwg

GENERAL NOTES:

1. EXISTING ASPHALT TO BE REMOVED SHALL BE STRIPPED AND PROPERLY DISPOSED OF OFFSITE.
2. ALL DISPOSAL OF DEMOLITION DEBRIS OR WASTE SHALL BE IN ACCORDANCE WITH ALL LOCAL, STATE, & FEDERAL REGULATIONS. CONTRACTOR SHALL PROVIDE OWNER WITH APPROPRIATE "BILLS OF LADING" TO DEMONSTRATE PROPER DISPOSAL OF ALL MATERIALS.
3. SITE DEMOLITION SHALL NOT OCCUR UNTIL PROPER ABATEMENT PROCEDURES HAVE OCCURRED. ABATEMENT, IF NECESSARY, SHALL BE THE RESPONSIBILITY OF THE CONTRACTOR.
4. THE CONTRACTOR SHALL CALL THE APPROPRIATE UTILITY COMPANIES AND DIG SAFE AT LEAST 72 HOURS PRIOR TO EXCAVATION TO REQUEST EXACT FIELD LOCATION FOR UTILITIES. OTHERWISE IT SHALL BE THE CONTRACTOR'S RESPONSIBILITY TO FIELD VERIFY THE LOCATION OF UNDERGROUND UTILITIES AND LOCATE POTENTIAL CONFLICT WITH THE APPROVED PLANS PRIOR TO CONSTRUCTION.
5. ALL CONSTRUCTION SIGNAGE IS TEMPORARY AND WILL BE REMOVED AT PROJECT COMPLETION. FINAL SIGNAGE WORDING AND PLACEMENT LOCATION TO BE ACCEPTED BY THE CITY.
6. SEDIMENT BARRIERS TO BE PLACED DIRECTLY ON THE FRONT AND SIDE PROPERTY LINES, DOWN GRADIENT OF THE PROPOSED PROJECT WORK PER DETAIL; FENCES ARE OFFSET OF THE PROPERTY LINES AS SHOWN ON THE PLAN FOR CLARITY PURPOSES AND DO NOT NECESSARILY DEPICT THE PHYSICAL LOCATION.
7. CONTRACTOR SHALL PLACE CATCH BASIN INLET PROTECTION ON CATCH BASINS AND FIELD INLETS DOWN-GRADIENT OF ALL NON-STABILIZED SURFACES, PER DETAIL.
8. DEMOLITION PLAN IS NOT INCLUSIVE OF ALL EXISTING ITEMS TO BE REMOVED AS PART OF SITE CONSTRUCTION INCLUDING BUT NOT LIMITED TO LANDSCAPING, UTILITIES, WORK WITHIN THE ROW, ETC. ALL DEMOLITION WORK SHALL BE IN ACCORDANCE WITH THE CITY OF BIDDEFORD REGULATIONS.
9. CONTRACTOR TO PROVIDE ACCESS TO EXISTING BUSINESSES ALONG GOOCH STREET THROUGH THE DURATION OF CONSTRUCTION.

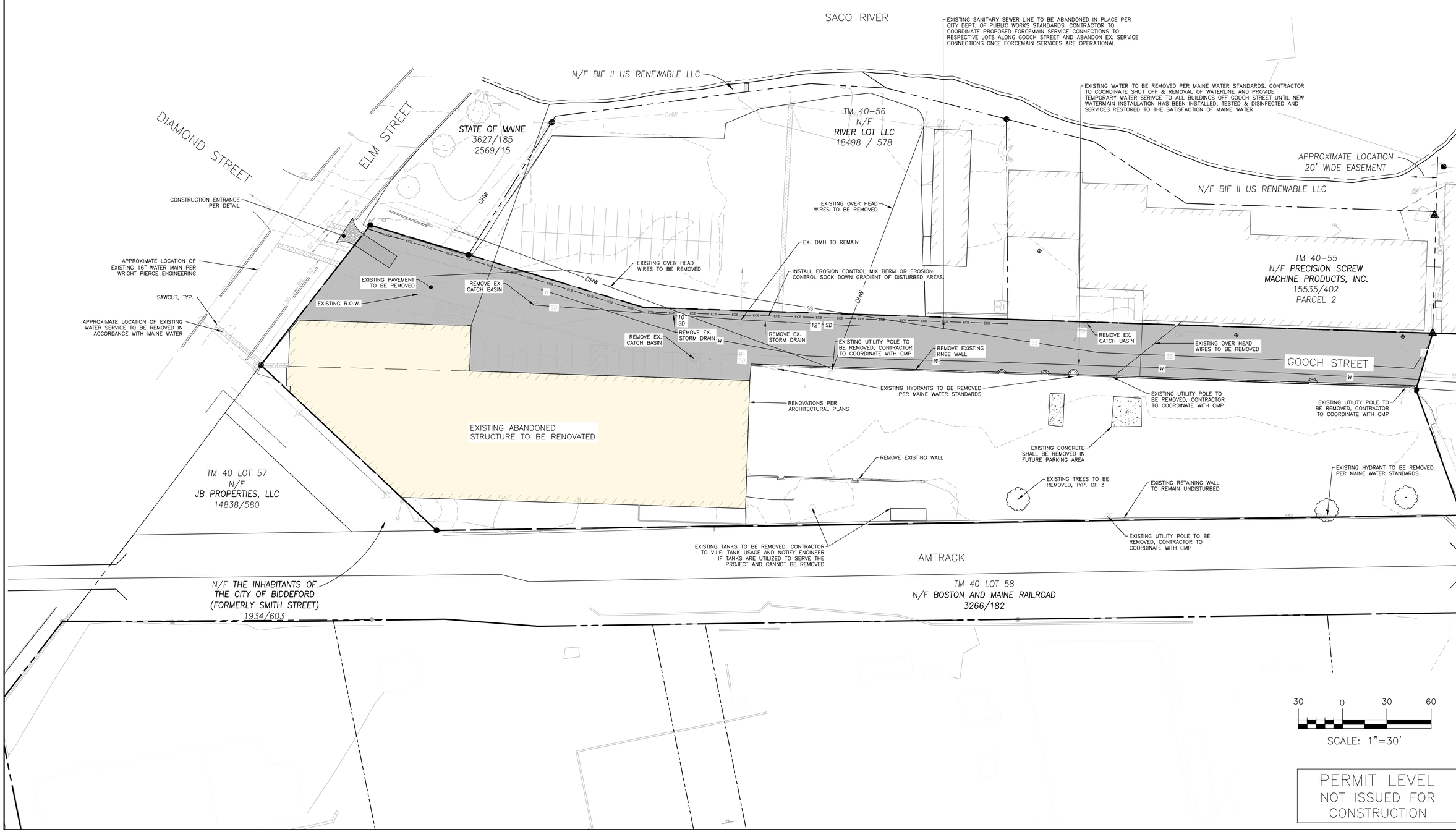

PERMIT LEVEL
NOT ISSUED FOR
CONSTRUCTION

ISSUED FOR	BY	DATE
SRCC	PFH	1/28/2021
CITY REVIEW	PFH	2/3/2021

DRAWING NAME: CONSTRUCTION MANAGEMENT / E&SC PLAN

PROJECT NAME/ ADDRESS: 1 GOOCH STREET REDEVELOPMENT

CLIENT/OWNER OF RECORD: TOM WATSON & CO. 188 STATE STREET, 3RD FLOOR, PORTLAND ME 04101

ACORN ENGINEERING, INC.

THIS PLAN SHALL NOT BE MODIFIED WITHOUT WRITTEN PERMISSION FROM ACORN ENGINEERING, INC. ANY MODIFICATIONS MADE BY OTHERS, OR OTHERWISE, SHALL BE AT THE USER'S SOLE RISK AND WITHOUT LIABILITY TO ACORN ENGINEERING, INC.

ACORN ENGINEERING, INC.
PO BOX 3422, PORTLAND, MAINE 04101
(207) 775-2655

FILE:	1093.10_CIVIL
JN:	1093.10
SCALE:	AS NOTED
DESIGNED BY:	PFH
DRAWN BY:	ZMS
CHECKED BY:	WHS

STATE OF MAINE PETER F. HEIL No. 15318 LICENSED PROFESSIONAL ENGINEER 2/3/21

DRAWING NO.

C-03

GENERAL NOTES:

1. ALL SIDEWALK AND VERTICAL GRANITE CURB TO BE REPLACED SHALL BE REBUILT TO CITY OF BIDDEFORD STANDARD.
2. ALL PAVEMENT STRIPING AND MARKINGS SHALL COMPLY TO CITY OF BIDDEFORD STANDARDS.
3. ANY ASPHALT AND CONCRETE TO BE REMOVED SHALL BE STRIPPED AND PROPERLY DISPOSED OF OFFSITE.
4. CURB TO BE REMOVED, STOCKPILED AND RESET IN ACCORDANCE WITH DETAIL. BROKEN CURB SHALL BE PROPERLY DISPOSED OF AND SHALL BE REPLACED AT THE CONTRACTOR'S EXPENSE.
5. ALL RAMPS TO CONFORM TO ADA GUIDELINES. SLOPE SHALL NOT EXCEED 1 INCH PER FOOT.
6. ALL SITE SIGNAGE & PAVEMENT MARKINGS TO COMPLY WITH MUTCD STANDARDS. CONTRACTOR TO COORDINATE AND INSTALL.
7. FOLLOWING COMPLETION OF CONSTRUCTION, THE OWNER SHALL BE RESPONSIBLE FOR THE MAINTENANCE AND MANAGEMENT OF DRIVEWAYS, SITE LIGHTING, TRASH REMOVAL AND SNOW REMOVAL.

SPACE AND BULK STANDARDS

ZONE:	REQUIRED (MSRD3)	REQUIRED (G-1)	EXISTING	PROPOSED
MINIMUM LOT SIZE	NONE	NONE (WITHIN EX. STRUCTURES ONLY)	111,442 SF	111,442 SF
MINIMUM STREET FRONTAGE	NONE		GOOCH STREET: 729' ELM STREET: 120'	GOOCH STREET: 729' ELM STREET: 120'
MINIMUM FRONT YARD SETBACK	NONE		0.90'	0.90'
MINIMUM REAR YARD SETBACK	NONE		11.70'	11.70'
MINIMUM SIDE YARD SETBACK	NONE		0.14'	0.14'
MINIMUM BUILDING HEIGHT	MIN. 2 STORIES OR 26 FEET		71'	71'
MINIMUM SHORE FRONTAGE		NONE (WITHIN EX. STRUCTURES ONLY)	310'	310'
SACO RIVER SETBACK (INCLUDING PARKING AREAS)		100' FROM NORMAL HIGH-WATER LINE		> 100'
SACO RIVER NO-CUT ZONE (SRCC)		75'		N/A
MAX LOT COVERAGE	100%	70% WITHN SHORELAND ZONE	96.4%	*83%

* INCLUDING THE GOOCH STREET ROADWAY IMPROVEMENTS

PARKING SUMMARY

USE	UNITS	SPACES REQUIRED	PROPOSED
SELF-STORAGE	320	1 SPACE/50 UNITS = 7 SPACES	
RESIDENTIAL	96	1 SPACE / DWELLING UNIT (EXCLUSIVELY FOR & OCCUPANCY RESTRICTED) = 96 SPACES	
ADA (8'X18')			6
STANDARD (9'X18')			48
60 DEGREE (9'X18.42')			52
TOTAL SPACES		103	106

PLAN REFERENCES:
1. "BIDDEFORD PARKING GARAGE, MERC SITE" PLAN SET, PREPARED BY DESMAN, DATED SEPTEMBER 18, 2020.
2. "ALTA/NSPS LAND TITLE SURVEY" PREPARED BY OWEN HASKELL, INC., DATED DECEMBER 18, 2020.

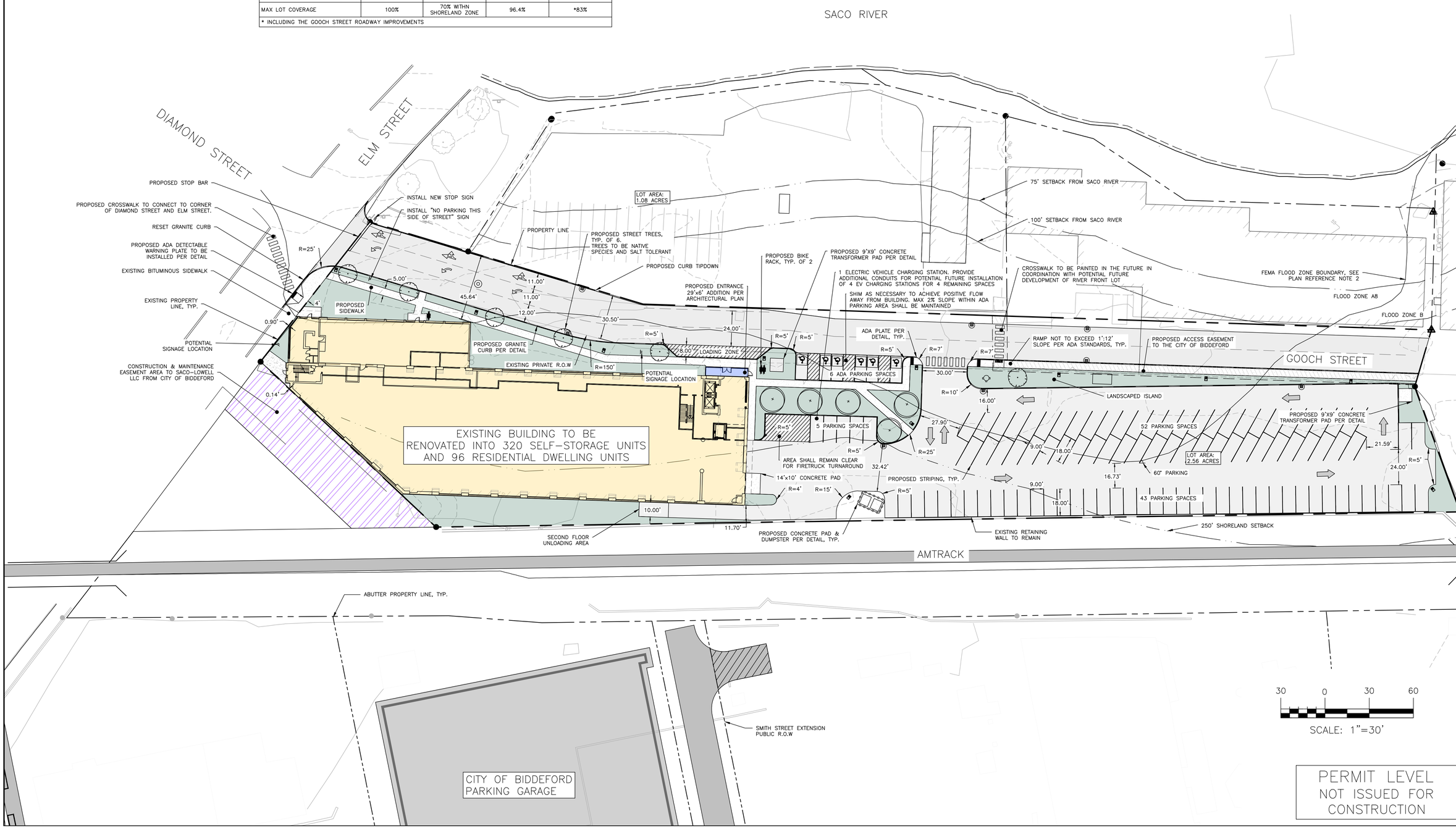

ISSUED FOR	BY	DATE
SRCC	PFH	1/28/2021
CITY REVIEW	PFH	2/3/2021

DRAWING NAME: SITE & LANDSCAPE PLAN

PROJECT NAME/ ADDRESS: 1 GOOCH STREET REDEVELOPMENT

CLIENT/OWNER OF RECORD: TOM WATSON & CO. 188 STATE STREET, 3RD FLOOR, PORTLAND ME 04101

ACORN ENGINEERING, INC.

THIS PLAN SHALL NOT BE MODIFIED WITHOUT WRITTEN PERMISSION FROM ACORN ENGINEERING, INC. ANY MODIFICATIONS MADE WITHOUT PERMISSION OR, OTHERWISE, SHALL BE AT THE USER'S SOLE RISK AND CONSEQUENCES, PLACING NO LIABILITY ON ACORN ENGINEERING, INC.

ACORN ENGINEERING, INC.
PO BOX 3271, PORTLAND, MAINE 04101
(207) 775-2655

FILE:	1093.10_CIVIL
JN:	1093.10
SCALE:	AS NOTED
DESIGNED BY:	PFH
DRAWN BY:	ZMS
CHECKED BY:	WHS

STATE OF MAINE PETER F. HEIL No. 15318 LICENSED PROFESSIONAL ENGINEER 2/3/21

DRAWING NO.

C-10

GENERAL NOTES:

1. LOCATION OF PROPOSED CONNECTIONS ARE APPROXIMATE. CONTRACTOR TO CONTACT ENGINEER IF FIELD INFORMATION VARIES FROM INFORMATION ON PLANS.
2. CONTRACTOR IS TO BE CAUTIONED THAT CERTAIN LOCATIONS AND/OR ELEVATIONS OF EXISTING UTILITIES HAVE BEEN PROVIDED THROUGH UTILITY COORDINATION OR OTHER OBSERVATIONS. INFORMATION IS NOT TO BE RELIED UPON AS EXACT OR COMPLETE. CONTRACTOR TO FIELD VERIFY AND COORDINATE WITH UTILITY COMPANY AND DIG SAFE NO LESS THAN 72 HOURS PRIOR TO ANY EXCAVATION TO REQUEST EXACT FIELD LOCATION OF ALL UTILITIES. IT SHALL BE THE RESPONSIBILITY OF THE CONTRACTOR TO RELOCATE ALL EXISTING UTILITIES WHICH CONFLICT WITH THE PROPOSED IMPROVEMENTS INDICATED IN THE CONTRACT DOCUMENTS. CONTRACTOR TO NOTIFY ENGINEER OF ANY DIFFERENTIATIONS FROM EXISTING CONDITIONS, INCLUDING UTILITY INFORMATION, PRIOR TO ANY CHANGES.
3. FOR ALL UTILITIES, ACORN ENGINEERING DESIGN LIMITS END AT EXTERIOR WALL OF BUILDING. METERING OF UTILITIES TO BE COMPLETED BY M.E.P. UNLESS SPECIFIED OTHERWISE.
4. CONTRACTOR TO COORDINATE WITH ARCHITECT ON FINAL UTILITY CONNECTIONS WITHIN THE BUILDING.
5. SEWER UTILITIES: CONTRACTOR TO COORDINATE WITH ARCHITECT FOR FINAL SERVICE CONNECTION. SEWER UTILITIES TO BE CONSTRUCTED IN ACCORDANCE WITH CITY OF PORTLAND TECHNICAL STANDARDS. VALVE FOR BACKFLOW PREVENTION SHALL BE INSTALLED WITHIN THE THE PROPERTY LINES FOR EACH CITY SEWER CONNECTION. CONTACT ENGINEER IF INVERT FIELD CONDITIONS VARY FROM DESIGN.
6. WATER UTILITIES: FINAL PIPE SIZING PROVIDED BY M.E.P. ENGINEER AND FIRE PROTECTION DESIGNER. INTERNAL METERING, BACKFLOW PREVENTION, AND PRESSURE REDUCERS TO BE COMPLETED BY M.E.P. ENGINEER. DOMESTIC WATER PIPE SIZES WILL DETERMINE THE FINAL WATER METERING OPTIONS. METER MAY BE SMALLER THAN PROPOSED WATER MAIN. WATER METERING, PRESSURE REDUCER AND BACKFLOW PREVENTION TO BE IN ACCORDANCE WITH THE PORTLAND WATER DISTRICT STANDARDS. CONTRACTOR TO FOLLOW METERING GUIDELINES OF THE PORTLAND WATER DISTRICT AND CITY OF PORTLAND.
7. GAS UTILITIES: PROJECT GAS LOAD, GAS UTILITY DESIGN, AND FINAL GAS SERVICE LOCATION AND METERS TO BE DEFINED BY M.E.P. AND IN ACCORDANCE WITH UNITIL.
8. ELECTRIC UTILITIES: ELECTRIC DESIGN TO BE FINALIZED BY M.E.P. ENGINEER. ELECTRICAL LOAD TO BE DETERMINED BY M.E.P. ENGINEER. METER LOCATION AND TRANSFORMER SIZE, IF NECESSARY DEFINED BY M.E.P. M.E.P. TO FINALIZE SERVICE CONNECTION TO BUILDING. ALL ELECTRIC CONSTRUCTION SHALL CONFORM TO CMP GUIDEBOOK OF STANDARD REQUIREMENTS, MOST RECENT EDITION. DESIGN SUBJECT TO FINAL APPROVAL FROM CMP.
9. CABLE AND TELEPHONE PULLBOXES AND PEDESTAL LOCATIONS TO BE DETERMINED BY SPECTRUM AND CONSOLIDATED COMMUNICATIONS TO CONSTRUCTION. CONTRACTOR TO COORDINATE INSTALLATION OF UNDERGROUND UTILITIES WITH ALL UTILITY COMPANIES INVOLVED.

MINIMUM HORIZONTAL UTILITY SEPARATION

UTILITY	UGE/T/C	WATER	SEWER	GAS	STORMWATER
UGE/T/C	–	6'	5'	4'	6'
WATER	6'	–	5'*	6'	3'
SEWER	5'	5'*	–	5'	10'
GAS	4'	6'	5'	–	3'
STORMWATER	6'	3'	10'	3'	–

*PERMISSIBLE ONLY IF SEWER IS LAID MIN. 18" BELOW WATER SERVICE; OTHERWISE, 10' OF HORIZONTAL SEPARATION MUST BE MAINTAINED.

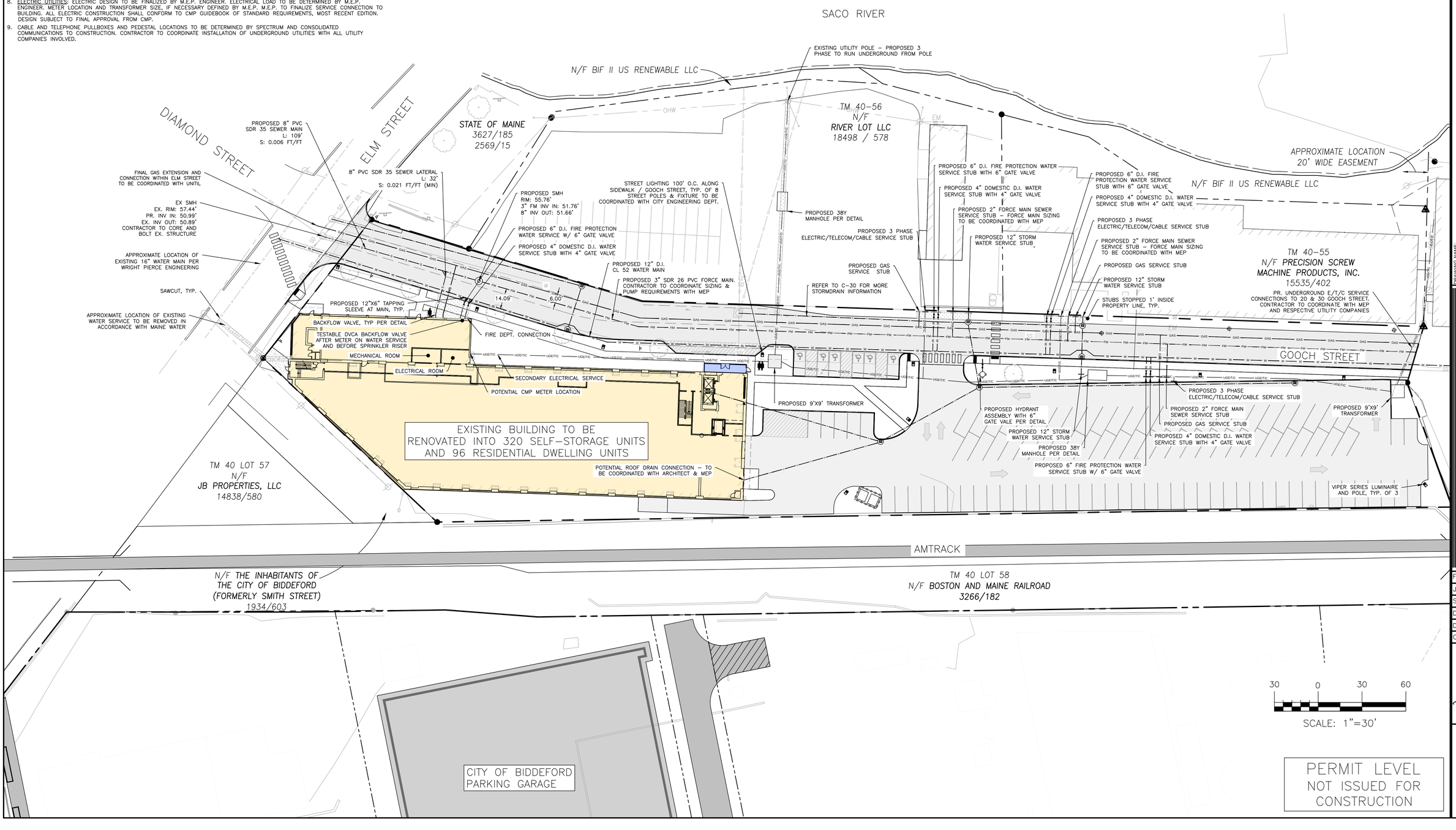

PERMIT LEVEL
NOT ISSUED FOR CONSTRUCTION

ISSUED FOR	BY DATE
SRCC	PFH 1/28/2021
CITY REVIEW	PFH 2/2/2021

DRAWING NAME: UTILITY PLAN

PROJECT NAME/ ADDRESS: 1 GOOCH STREET REDEVELOPMENT

CLIENT/OWNER OF RECORD: TOM WATSON & CO. 188 STATE STREET, 3RD FLOOR, PORTLAND ME 04101

ACORN ENGINEERING, INC.

THIS PLAN SHALL NOT BE MODIFIED WITHOUT WRITTEN PERMISSION FROM ACORN ENGINEERING, INC. ANY MODIFICATIONS MADE WITHOUT PERMISSION OR OTHERWISE SHALL BE AT THE USER'S SOLE RISK AND WITHOUT LIABILITY TO ACORN ENGINEERING, INC.

ACORN ENGINEERING, INC.
PO BOX 3372, PORTLAND MAINE 04101
(207) 775-2655

FILE:	1093.10_CIVIL
JN:	1093.10
SCALE:	AS NOTED
DESIGNED BY:	PFH
DRAWN BY:	ZMS
CHECKED BY:	WHS

STATE OF MAINE PETER F. HEIL No. 15318 LICENSED PROFESSIONAL ENGINEER 2/3/21

DRAWING NO.
C-20

GENERAL NOTES:

1. ALL WORK WITHIN THE CITY STREET RIGHT OF WAY SHALL MEET CITY OF BIDDEFORD STANDARDS.
2. DESIGN OF TEMPORARY SOIL RESTRAINT MEASURES SHALL BE THE RESPONSIBILITY OF THE CONTRACTOR IF NECESSARY FOR CONSTRUCTION.
3. CONTRACTOR SHALL ENSURE THAT UNDERDRAINS ARE CONSTRUCTED WITH POSITIVE OUTLET TO PROPOSED CONNECTIONS.
4. CATCH BASIN INLET PROTECTION TO BE INSTALLED WITHIN ANY STRUCTURES DOWNGRADIENT OF ACTIVE CONSTRUCTION.
5. SEDIMENTATION BARRIERS ARE TO BE INSTALLED DOWNGRADIENT OF ALL ACTIVE CONSTRUCTION WORK PER DETAIL. BARRIERS TO NOT EXTEND PAST PROPERTY LINES; BARRIERS SHOWN OFFSET FROM PROPERTY LINES ON PLANS FOR VISUAL PURPOSES ONLY.

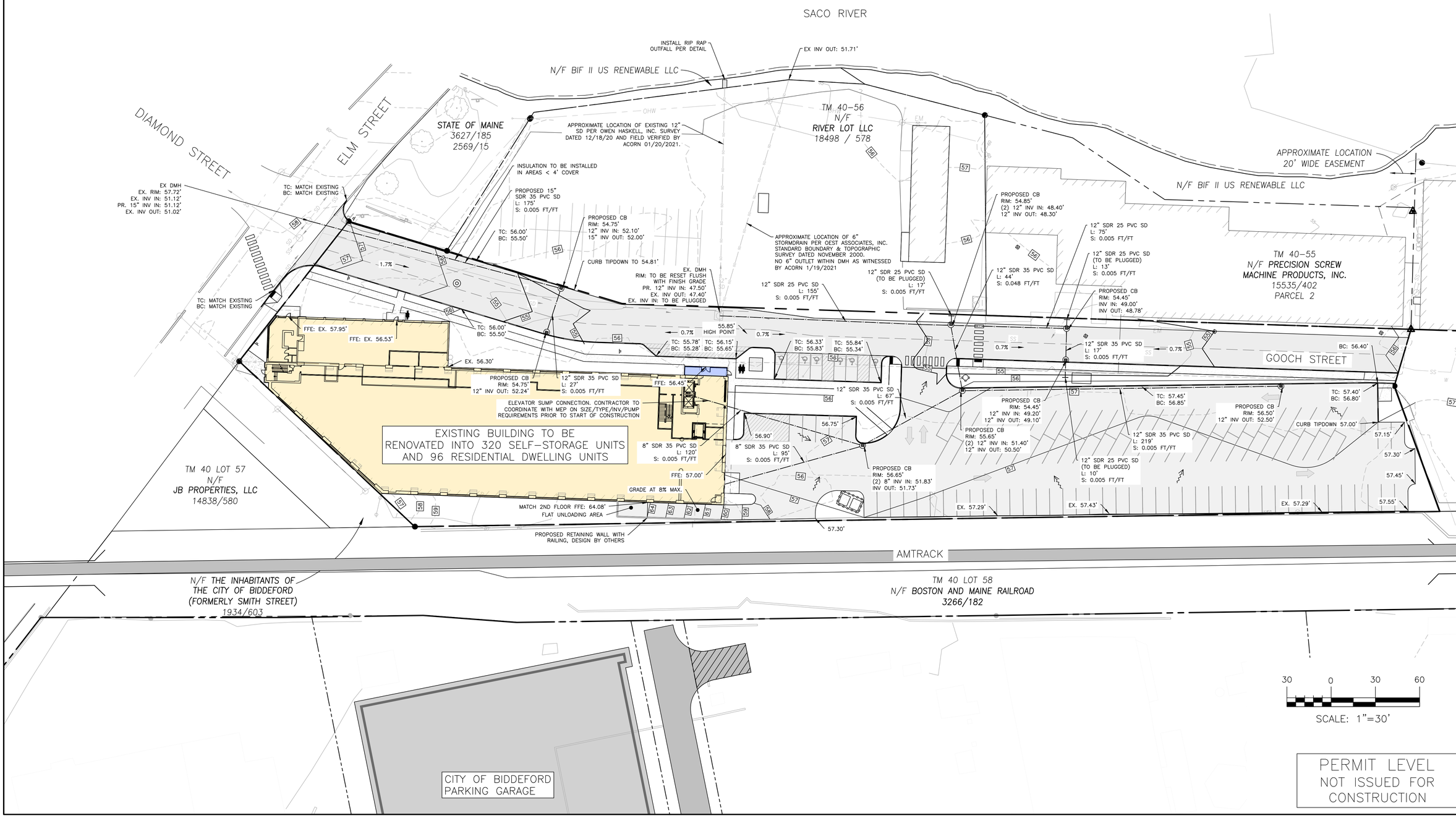

PERMIT LEVEL
NOT ISSUED FOR CONSTRUCTION

ISSUED FOR	BY	DATE
SRCC	PFH	1/28/2021
CITY REVIEW	PFH	2/3/2021

DRAWING NAME: GRADING & DRAINAGE PLAN

PROJECT NAME/ ADDRESS: 1 GOOCH STREET REDEVELOPMENT

CLIENT/OWNER OF RECORD: TOM WATSON & CO.
188 STATE STREET, 3RD FLOOR, PORTLAND ME 04101

ACORN ENGINEERING, INC.

THIS PLAN SHALL NOT BE MODIFIED WITHOUT WRITTEN PERMISSION FROM ACORN ENGINEERING, INC. ANY MODIFICATIONS MADE WITHOUT WRITTEN PERMISSION OR OTHERWISE, SHALL BE AT THE USER'S SOLE RISK AND WITHOUT LIABILITY TO ACORN ENGINEERING, INC.

ACORN ENGINEERING, INC.
PO BOX 3372, PORTLAND MAINE 04101
(207) 775-2655

FILE:	1093.10_CIVIL
JN:	1093.10
SCALE:	AS NOTED
DESIGNED BY:	PFH
DRAWN BY:	ZMS
CHECKED BY:	WHS

STATE OF MAINE
PETER F. HEIL
No. 15318
LICENSED
2/3/21

DRAWING NO.
C-30

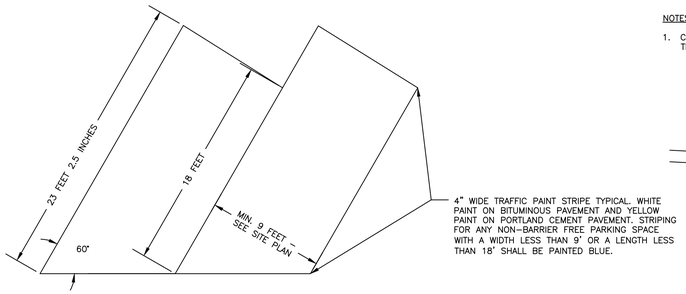

ANGLED PARKING SPACE DIMENSIONS
NOT TO SCALE

NOTES:

1. CURB SHALL BE RESET IN ACCORDANCE WITH MDOT 609.08 WITH THE EXCEPTION OF CURB SPACING TO BE INSTALLED PER DETAIL.

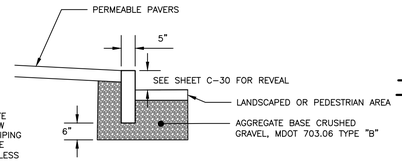

VERTICAL GRANITE CURB CROSS SECTION

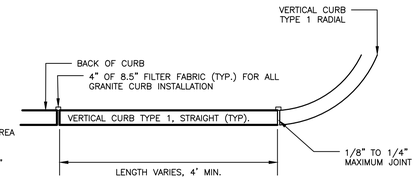

VERTICAL GRANITE CURB PLAN VIEW

VERTICAL GRANITE CURB DETAIL
NOT TO SCALE

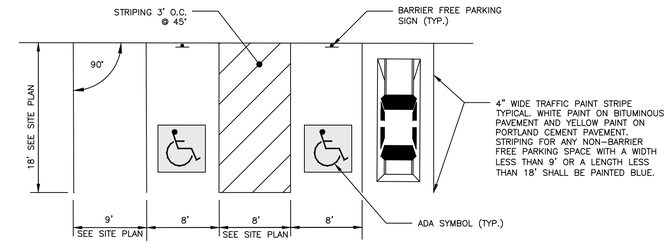

PARKING SPACE DIMENSIONS
NOT TO SCALE

NOTES:

1. SAWCUT EXISTING PAVEMENT AND REMOVE 2' STRIP OF EXISTING PAVEMENT. CREATE UNIFORM AND RIGID BUTT JOINT AND APPLY BITUMINOUS TACK COAT AT AN APPLICATION RATE OF 0.10 TO 0.14 GALLONS PER SQUARE YARD PRIOR TO PLACEMENT OF NEW BITUMINOUS PAVEMENT.
2. THE NEW PAVEMENT SECTION SHALL MEET PAVEMENT SECTION DETAIL AT A MINIMUM OR THE THE EXISTING PAVEMENT AND AGGREGATE BASE AND SUBBASE DEPTH WHICHEVER IS GREATER.

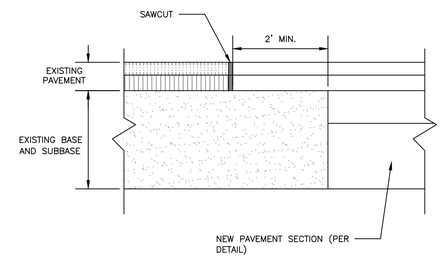

PAVEMENT SAWCUT DETAIL
NOT TO SCALE

NOTES:

1. ALL ASPECTS OF RESERVED PARKING SIGN CONSTRUCTION SHALL BE IN ACCORDANCE WITH MANUAL ON UNIFORM TRAFFIC CONTROL DEVICES, 2009 OR MOST RECENT EDITION
2. SIGN SHALL BE CONSTRUCTED AS SIGN R7-8 UNDER THE "PARKING AND STANDING SIGNS AND PLAQUES" (R7 SERIES) WITHIN THE MANUAL ON UNIFORM TRAFFIC CONTROL DEVICES, 2009 OR MOST RECENT EDITION. VAN ACCESSIBILITY SHALL BE CONSTRUCTED AS SIGN R7-8a OR R7-8b.
3. SIGN POST CONSTRUCTION AND MOUNTING SHALL BE IN ACCORDANCE WITH CHAPTER 2A OF THE MANUAL ON UNIFORM TRAFFIC CONTROL DEVICES, 2009 OR MOST RECENT EDITION.

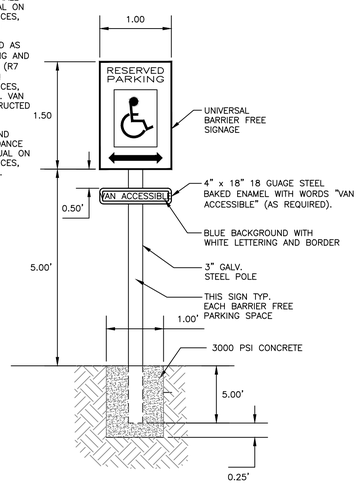

BARRIER FREE PARKING SIGN
NOT TO SCALE

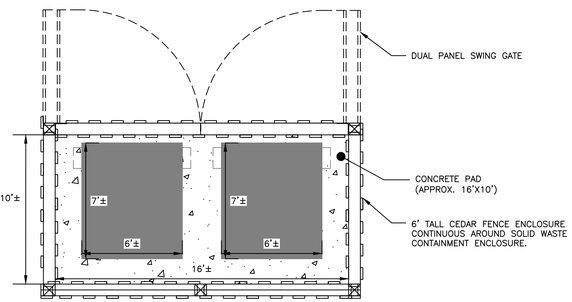

SCREENED TRASH ENCLOSURE
NOT TO SCALE

NOTE:

1. CROSSWALKS TO BE BUILT IN CONFORMANCE WITH MUTCD STANDARDS, LATEST EDITION.
2. CROSSWALKS ARE TO BE PAINTED WHITE MEETING MAINE DOT SPECIFICATIONS.
3. BLOCKS TO BE PARALLEL TO THE DIRECTION OF CAR TRAFFIC.

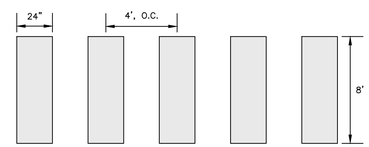

BLOCK CROSSWALK
NOT TO SCALE

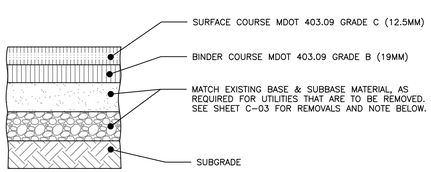

NOTE:
1. COMPACT SUBGRADE TO 95% MAXIMUM DRY DENSITY IN ACCORDANCE WITH ASTM D-1557.
2. CONTRACTOR TO VERIFY EXISTING GOOCH STREET BASE AND SUBBASE MATERIALS AND MATCH EXISTING.
3. PROJECT PROPOSES TO MILL EXISTING PAVEMENT AND INSTALL NEW BITUMINOUS PAVEMENT PER DETAIL. REFER TO APPLICABLE UTILITY CROSS SECTIONS FOR NEW UTILITY INSTALLATION.

THICKNESS OF LAYERS	
STANDARD	LAYERS
2"	SURFACE COURSE MDOT 403.09 GRADE C (12.5mm)
3"	BINDER COURSE MDOT 403.09 GRADE B (19mm)
6"	AGGREGATE BASE GRAVEL MDOT 703.06 TYPE B OR A
18"	AGGREGATE SUBBASE GRAVEL MDOT 703.06 TYPE D

PAVEMENT PROFILE: GOOCH STREET
NOT TO SCALE

NOTES:

1. COMPOSITE WET SET (REPLACEABLE TACTILE WARNING SURFACE UNITS SHALL BE AS MANUFACTURED BY ADA SOLUTIONS, INC. (WWW.ADATILE.COM), OR APPROVED EQUAL.
2. CAST IN PLACE CONCRETE SHALL MEET SPECIFICATIONS FOR MDOT CLASS A STRUCTURAL CONCRETE, MINIMUM COMPRESSIVE STRENGTH 4,000 PSI. THE CONCRETE SHALL BE SEALED PRIOR TO SETTING PANELS. THE EXPOSED CONCRETE BORDER SHALL RECEIVE A UNIFORM BROOM FINISH PERPENDICULAR TO THE FLOW OF PEDESTRIAN TRAFFIC.
3. TRUNCATED DOMES SHALL BE ALIGNED IN ROWS, PARALLEL AND PERPENDICULAR TO THE PREDOMINANT DIRECTION OF TRAVEL. TRUNCATED DOME BRICKS AND GRANITE PAVERS ARE NOT ALLOWED.
4. FOR ALL SIDEWALK RAMPS, FEDERAL YELLOW COLORED (#33538) TILES SHALL BE USED. FOLLOW MANUFACTURER'S INSTRUCTIONS FOR INSTALLATION.

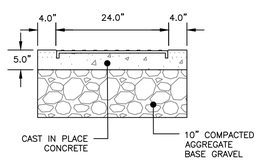

SECTION A–A

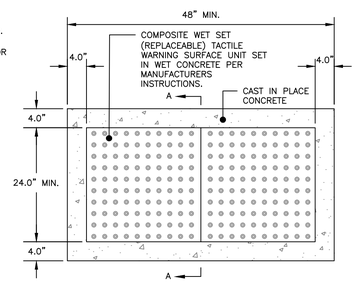

PLAN VIEW

SIDEWALK RAMP DETECTABLE WARNING PANEL
NOT TO SCALE

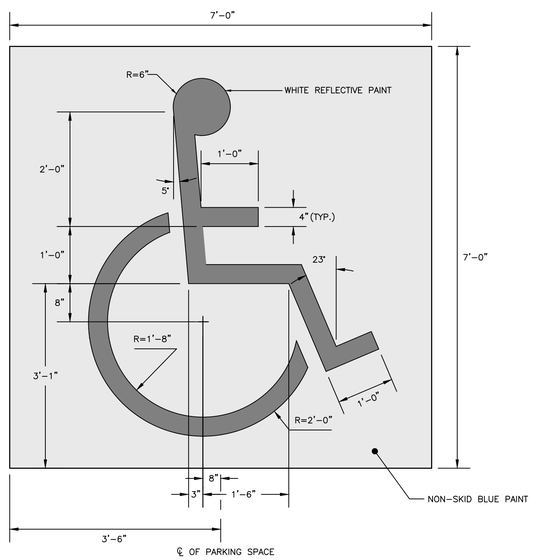

INTERNATIONAL BARRIER FREE SYMBOL
NOT TO SCALE

PERMIT LEVEL
NOT ISSUED FOR CONSTRUCTION

ISSUED FOR	BY / DATE
SRCC	PFH 1/28/2021
CITY REVIEW	PFH 2/3/2021

DRAWING NAME: SITE DETAILS – 1

PROJECT NAME/ADDRESS: 1 GOOCH STREET REDEVELOPMENT

CLIENT/OWNER OF RECORD: TOM WATSON & CO. 188 STATE STREET, 3RD FLOOR, PORTLAND ME 04101

ACORN ENGINEERING, INC.

THIS PLAN SHALL NOT BE MODIFIED WITHOUT WRITTEN PERMISSION FROM ACORN ENGINEERING, INC. ANY MODIFICATIONS MADE WITHOUT WRITTEN PERMISSION OR OTHERWISE, SHALL BE AT THE USER'S SOLE RISK AND WITHOUT LIABILITY TO ACORN ENGINEERING, INC.

ACORN ENGINEERING, INC.
2 CONSTITUTION LANE, SUITE 2
PO BOX 3297
PORTLAND, MAINE 04101
(207) 775-2655

FILE:	1093.10_CIVIL
JN:	1093.10
SCALE:	AS NOTED
DESIGNED BY:	PFH
DRAWN BY:	ZMS
CHECKED BY:	WHS

STATE OF MAINE — PETER F. HEIL No. 15318 LICENSED — 2/3/21

DRAWING NO.
C-40

PLANTING NOTES:

1. ALL PLANT SELECTION AND INSTALLATION WILL BE IN COMPLIANCE WILL THE CITY OF PORTLAND TECHNICAL MANUAL (SECTION 4).
2. CONTRACTOR TO VERIFY ALL UTILITIES ON PROPERTY AND TO PROTECT ALL UTILITIES DURING EXCAVATION FOR PLANTS.
3. IF THERE IS A DISCREPANCY BETWEEN THE NUMBER OF PLANTS SHOWN ON THE PLAN AND THE NUMBER OF PLANTS SHOWN IN PLANT LIST (IF ANY), THE NUMBER OF PLANTS SHOWN ON PLAN WILL TAKE PRECEDENCE.
4. ALL MATERIAL SHALL COMPLY WITH THE LATEST EDITION OF THE AMERICAN STANDARD FOR NURSERY STOCK, AMERICAN ASSOCIATION OF NURSERYMAN.
5. ALL DISTURBED AREAS NOT TO BE PAVED OR PLANTED SHALL BE LOAMED AND SEEDED AS SHOWN. THE SEED MIX SPECIFICATIONS ARE AS FOLLOWS: LESCO FINE FESCUE LINKS BLEND OF 35% HARD FESCUE, 35% CREEPING RED FESCUE, 20% CHEWINGS FESCUE AND 10% SHEEP FESCUE. ADD 5% LITTLE BLUESTEM AND 5% NORTHEAST WILDFLOWER SEED MIXTURE BY WEIGHT TO THE LINKS BLEND.
6. FOR PRICING PURPOSES, PROVIDE A PER TREE UNIT COST FOR STAKING AND GUYING. IF STAKING AND GUYING IS REQUIRED, REMOVE TREE WRAP, STAKES, AND GUY WIRES AT END OF FIRST GROWING SEASON.
7. FOR TREE PLANTING IN LAWN AREAS, ANY DISTURBED LAWN SHALL BE LOAMED AND SEEDED AS NECESSARY.
8. NEW TREES TO BE INSTALLED WITH A SLOW RELEASE WATERING BAG.
9. CONTRACTOR TO BE HELD RESPONSIBLE FOR THE WATERING AND MAINTENANCE OF ALL PLANT MATERIAL AND LANDSCAPING IMPROVEMENTS FOR AT LEAST 30 DAYS FOLLOWING INSTALLATION. FOLLOWING THIS PERIOD, THE LANDOWNER OR PROPERTY MANAGEMENT SHALL BE RESPONSIBLE FOR CONTINUED WATERING AND MAINTENANCE. CONTRACTOR TO MAINTAIN A ONE YEAR WARRANTY ON ALL PLANTINGS FOLLOWING FINAL INSTALLATION.
10. ALL PROPOSED PLANTS SHALL BE LOCATED AS SHOWN ON THE PLANS. CONTRACTOR TO NOTIFY ENGINEER WHEN PLANTINGS HAVE BEEN MOBILIZED ON SITE. ENGINEER TO INSPECT AND ACCEPT OR REJECT ANY SPECIMENS ON THE BASIS OF APPARENT HEALTH, HARDINESS, AND CONFORMANCE WITH THE PLANTING SCHEDULE. REJECTED SPECIMENS ARE TO BE REPLACED BY THE CONTRACTOR AT NO ADDED COST TO THE OWNER. ACCEPTANCE DOES NOT WAIVE THE REQUIRED ONE YEAR PLANTING WARRANTY.
11. GEOTEXTILE MARKER LAYER REQUIRED IN AREAS WHERE EXISTING SUBGRADE IS COMPRISED OF URBAN FILL – SEE ENVIRONMENTAL MEDIA MANAGEMENT PLAN.

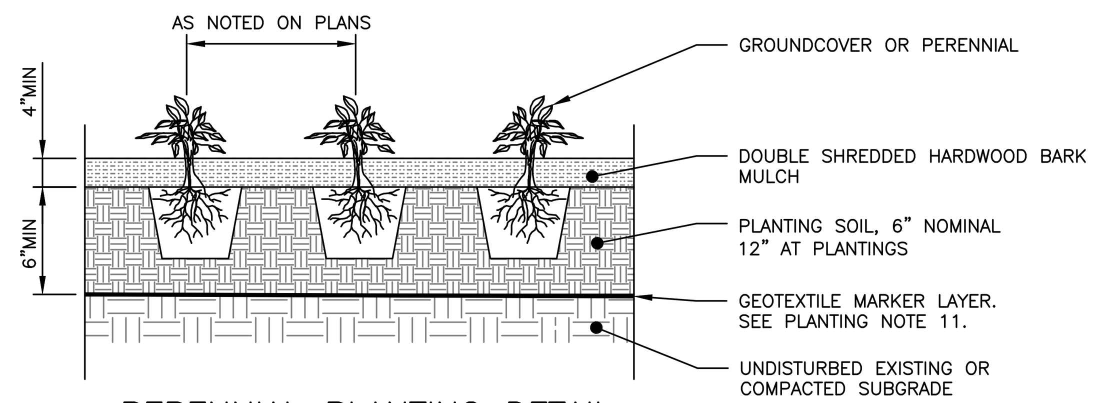

PERENNIAL PLANTING DETAIL
NOT TO SCALE

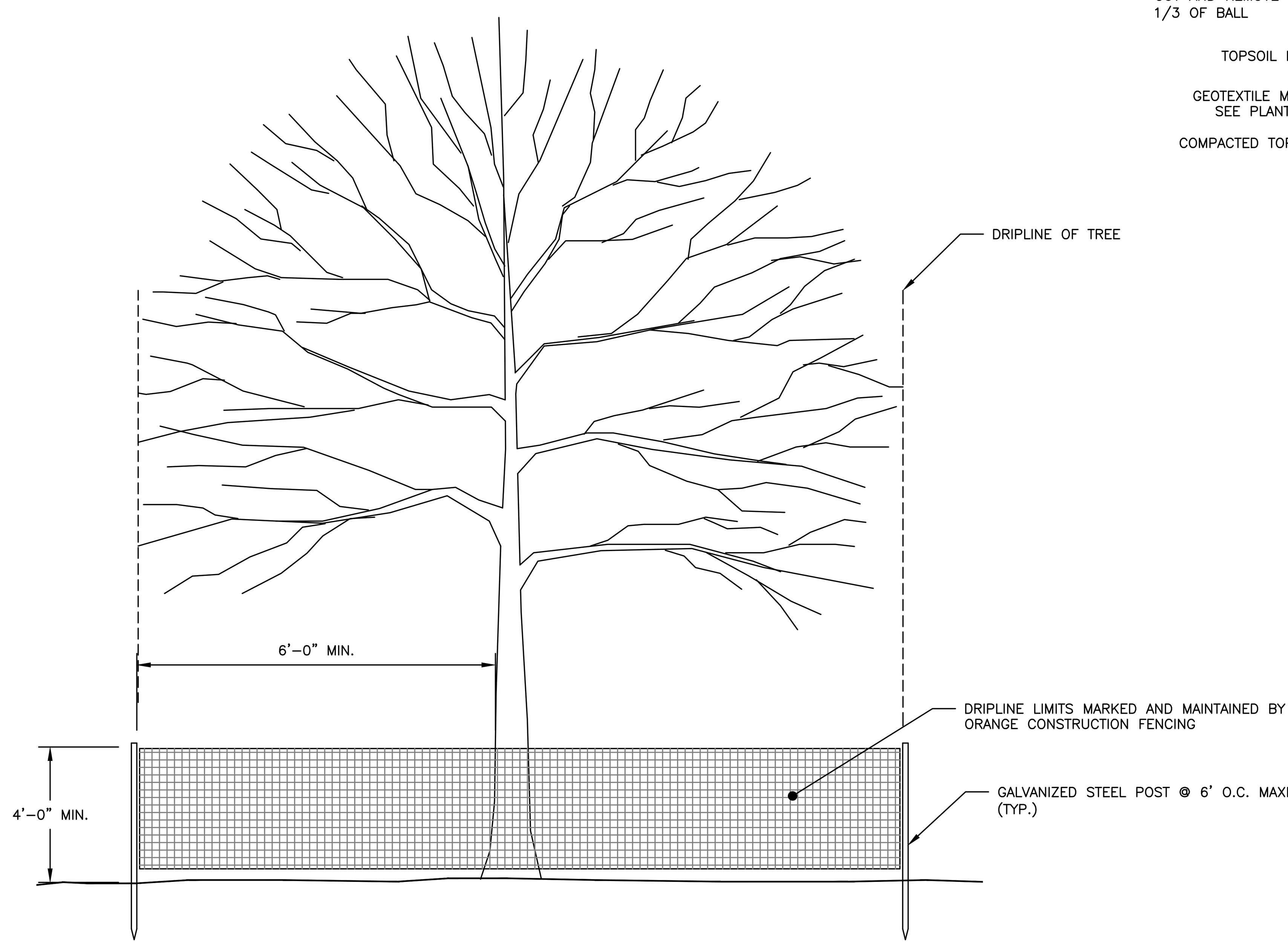

NOTES:

1. TREE PROTECTION FENCING SHALL BE INSTALLED PRIOR TO ANY CONSTRUCTION ACTIVITY.
2. INSTALL PROTECTIVE FENCING TO LIMIT OF DRIPLINE ON TREE OR A MINIMUM OF 6' FROM TRUNK WHEN NECESSARY, WITH PRIOR PERMISSION OF LANDSCAPE ARCHITECT.
3. DO NOT STORE CONSTRUCTION EQUIPMENT, MATERIALS, TOOLS, ETC. WITHIN PROTECTIVE FENCING.
4. MAINTAIN FENCING IN A NEAT AND ORDERLY FASHION THROUGHOUT CONSTRUCTION PERIOD.

TREE PROTECTION DETAIL
NOT TO SCALE

NOTES:

1. DIG HOLE AT LEAST 2 TIMES THE DIAMETER OF THE ROOT BALL AND AS DEEP AS THE ROOT BALL (NO DEEPER). SET ROOT BALL CENTERED, WITH THE TOP AT DOWNHILL EDGE OF THE HOLE.
2. TOPSOIL BACKFILL SHALL BE NATURAL FRIABLE, FERTILE, FINE LOAMY SOIL POSSESSING THE CHARACTERISTICS OF TOPSOIL IN THE VICINITY WHICH PRODUCE A HEAVY GROWTH. TOPSOIL SHALL CONTAIN NOT LESS THAN 6% NOR MORE THAN 20% ORGANIC MATTER. TOP SOIL SHALL HAVE A pH VALUE OF NOT LESS THAN 5.5 NOR MORE THAN 7.0.
3. CONTAINER GROWN STOCK – REMOVE CONTAINER PROTECTING THE ROOT BALL. GENTLY COMB OUT THE ROOTS. PRUNE DAMAGED ROOTS.
4. BACKFILL THE HOLE WITH TOPSOIL TO A DEPTH NOT TO EXCEED 8" THEN WATER SUFFICIENTLY TO SETTLE TOPSOIL. REPEAT SOIL BACKFILL, WATER, DRAIN. TOPSOIL SHALL BE TAMPED UNDER EDGES OF THE BALLED PLANTS. BACKFILL TO FINISH GRADE AND CREATE AN EARTHEN SAUCER. SOAK PLANTS TWICE WITHIN THE FIRST TWENTY–FOUR HOURS OF PLANTING.

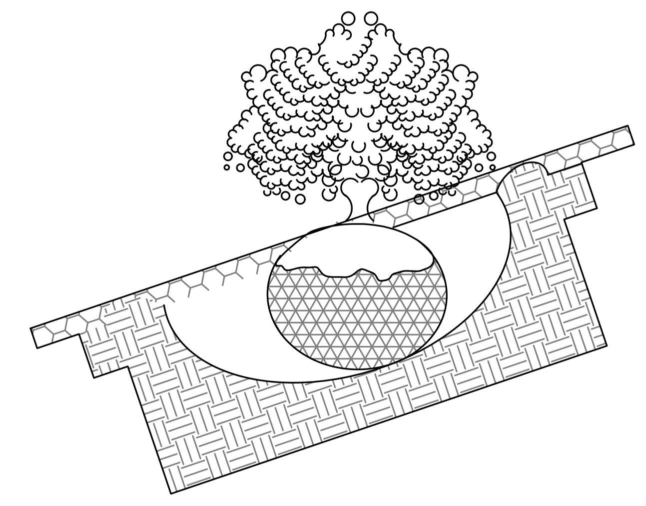

TYPICAL PLANTING
NOT TO SCALE

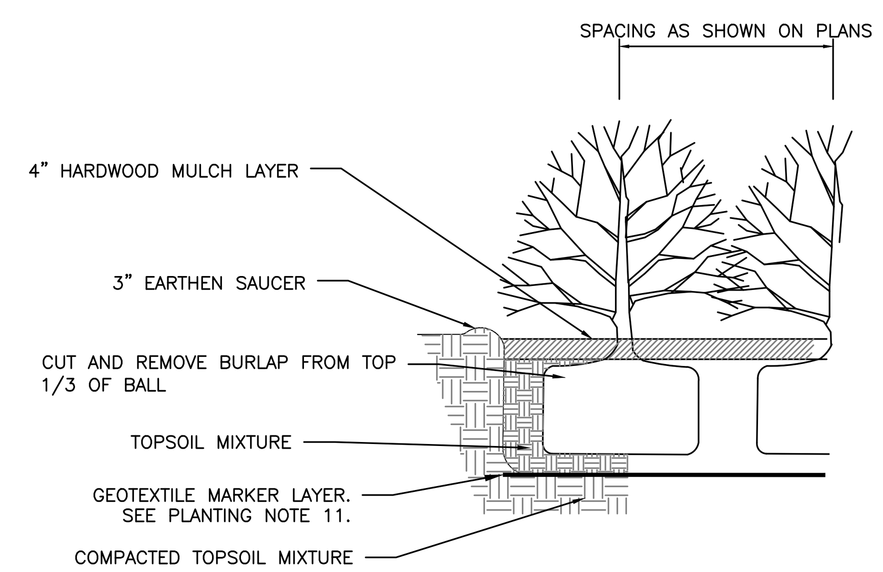

SHRUB PLANTING DETAIL
NOT TO SCALE

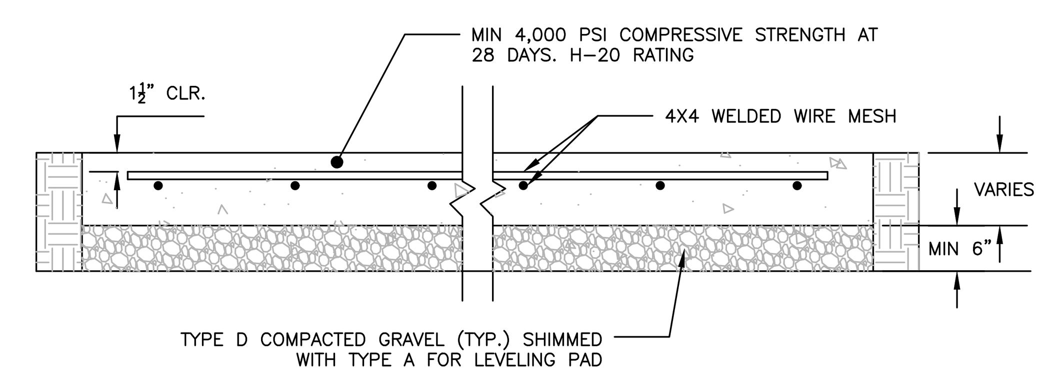

CONCRETE PAD DETAIL
NOT TO SCALE

NOTES:
1. AT A MINIMUM, TESTING SHALL CONSIST OF ENTRAINED AIR AND SLUMP TESTS ON SITE PRIOR TO POURING THE SIDEWALKS. ENTRAINED AIR TESTS SHALL BE DONE IN ACCORDANCE WITH AASHTO T152. TEST FIRST TWO LOADS AND EVERY THIRD LOAD THEREAFTER PROVIDED CONSISTENT RESULTS ARE ACHIEVED.
2. WELDED WIRE FABRIC SHALL BE PLACED 2 INCHES ABOVE THE CRUSHED GRAVEL, AND 2 INCHES FROM ALL FINISHED EDGES, EXPANSION JOINTS AND CURBS. ALL FABRIC JOINTS SHALL BE OVERLAPPED A MINIMUM OF 1 FOOT AND BE PROPERLY TIED. IF THE CONTRACTOR ELECTS TO USE REBAR, ONLY 4–GAUGE WILL BE ACCEPTABLE. IF THE CONTRACTOR ELECTS TO USE A PRE–MIXED FIBER MESH, A SPECIFICATION SHEET MUST BE SUBMITTED AND PRE–APPROVED BY THE ENGINEER PRIOR TO ITS APPLICATION.
3. SLABS SHALL BE PLACED ALTERNATELY IN LENGTHS NOT TO EXCEED 30 FEET OR AS DIRECTED AND SHALL BE SEPARATED BY AN EXPANSION JOINT OF PREFORMED EXPANSION FILLER ½ INCH IN THICKNESS.
4. WHEN CONSTRUCTED ADJACENT TO A BUILDING, RETAINING WALL OR OTHER FIXED STRUCTURE, A ¼ INCH THICK PREFORMED JOINT FILLER SHALL BE USED BETWEEN THE SLAB AND THE STRUCTURE.
5. THE SIDEWALK SURFACE SHALL BE SCORED INTO BLOCK UNITS NO GREATER THAN 40 SQUARE FEET AS DIRECTED. THE DEPTH OF THE SCORING SHALL BE AT LEAST ONE QUARTER OF THE THICKNESS OF THE SLAB.
6. ANY MATCHING INTO EXISTING SIDEWALKS SHALL BE DONE SO WITH A CLEAN VERTICAL FACE CONNECTION.
7. THE SURFACE SHALL BE FINISHED TO PRODUCE A BROOMLIKE "BRUSHED" PATTERN. NO PLASTERING OF THE SURFACE WITH MORTAR WILL BE PERMITTED. THE FINISH SHALL RESULT IN A SURFACE OF UNIFORM TEXTURE AND COLOR. ALL OUTSIDE EDGES OF THE SLAB AND ALL JOINTS SHALL BE ROUNDED WITH A ¼ INCH RADIUS EDGING TOOL.
8. CONCRETE SHALL BE CURED FOR 72 HOURS. CURING SHALL BE BY MEANS OF THOMPSON'S WATER SEAL AS MANUFACTURED BY E.A. THOMPSON CO., INC. OF MEMPHIS, TENNESSEE, BOILED LINSEED OIL, WHITE PIGMENTED CURING COMPOUND, OR BY OTHER APPROVED METHODS. CONCRETE SIDEWALK TO BE SEALED WITH CONSOLIDECK SALTGUARD WB OR APPROVED EQUAL 28 DAYS AFTER PLACEMENT. FOLLOW MANUFACTURER'S RECOMMENDATIONS FOR APPLICATION.
9. GENERAL CONTRACTOR TO COLLECT DELIVERY SLIPS AND TRANSFER TO THE OWNER.
10. REFER TO CITY OF PORTLAND CONCRETE SPECIFICATIONS SECTION 608 FOR MORE INFORMATION.

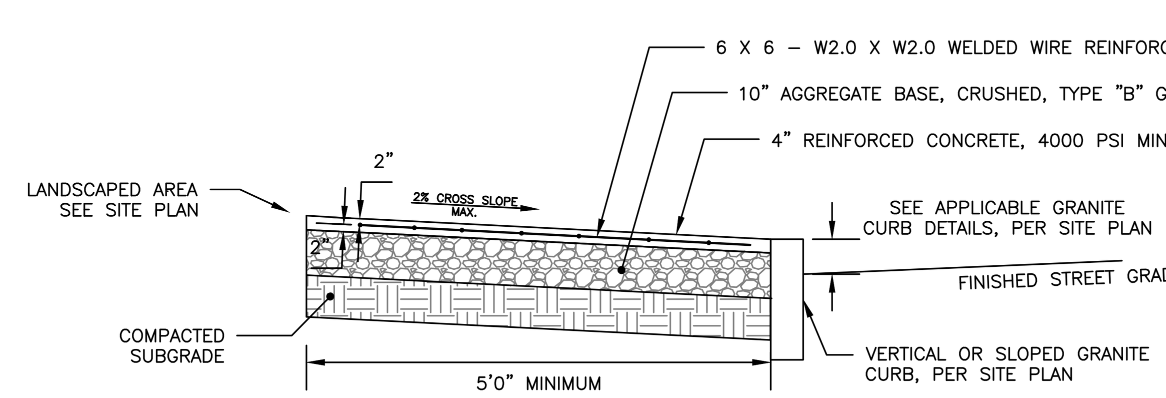

REINFORCED CONCRETE SIDEWALK
NOT TO SCALE

NOTES:

1. BICYCLE RACK SHALL BE "DERO BIKE HITCH", AS MANUFACTURED BY DERO BIKE RACKS.
2. BICYCLE RACK SHALL HAVE CAPACITY FOR TWO BICYCLES.
3. BICYCLE RACK PARTS SHALL BE OF UNIFORM COLOR AND SHALL BE FINISHED IN ACCORDANCE WITH PRODUCT SPECIFICATION.
4. BICYCLE RACK SHALL BE INSTALLED IN ACCORDANCE WITH MANUFACTURER'S MOST RECENT INSTALLATION RECOMMENDATIONS, AND SHALL BE INSTALLED WITH AN IN–GROUND MOUNT UNLESS OTHERWISE APPROVED BY ENGINEER.
5. MINIMUM OFFSETS SHOWN. MANUFACTURER'S RECOMMENDED OFFSETS SHALL BE ENFORCED WHERE POSSIBLE.
6. MINIMUM DISTANCE BETWEEN BICYCLE RACKS SHALL BE 24". RECOMMENDED DISTANCE BETWEEN BICYCLE RACKS SHALL BE 38".
7. ALL OFFSETS ARE FROM OUTSIDE EDGES OF ITEMS.
8. CONCRETE SHALL BE 4000 PSI @28 DAYS. BOTTOM OF CONCRETE SHALL BE AT TOP OF SIDEWALK GRAVEL ELEVATION. DEPTH VARIES APPROX. 4"–7".
9. GRAVEL LAYER SHALL BE INSTALLED IN ACCORDANCE WITH CONCRETE SIDEWALK DETAIL, AND SHALL BE MAINEDOT 703.06 TYPE B.

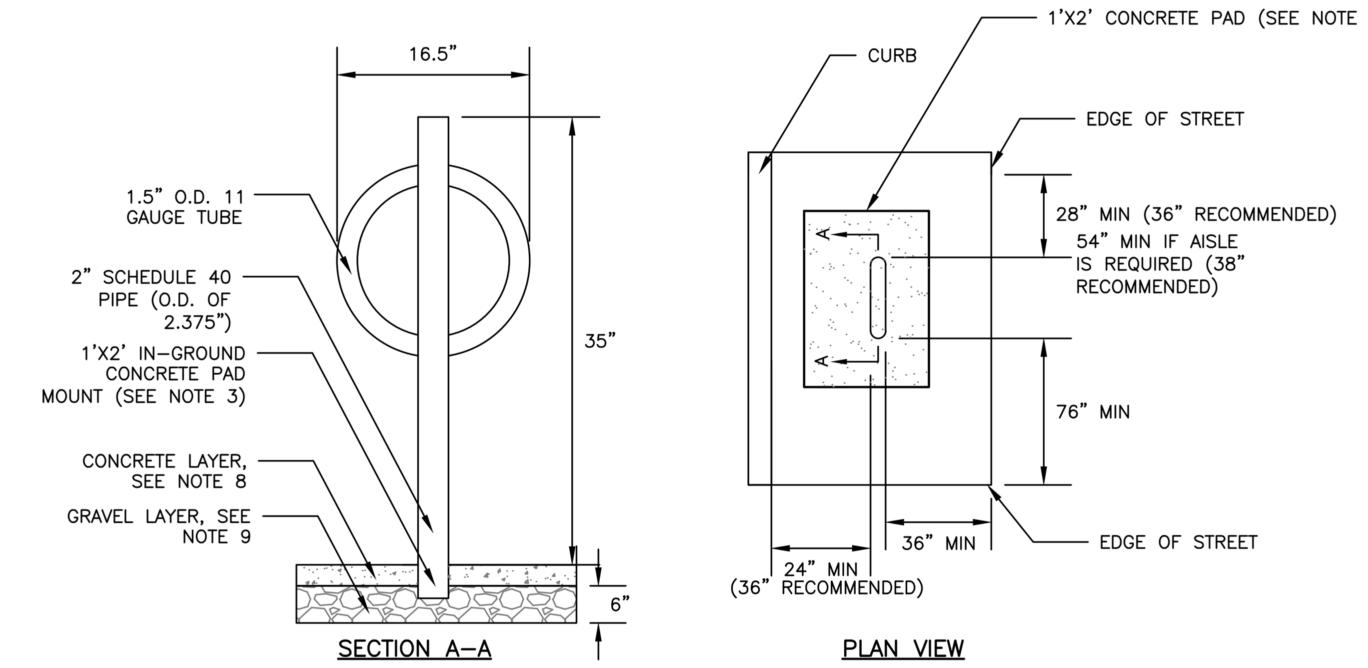

DERO BIKE HITCH
NOT TO SCALE

NOTES:
1. CONCRETE: 5000 PSI @ 28 DAYS
2. CEMENT: TYPE III PER ASTM C150–81
3. LIGHT POLE BASE SHALL BE AS SUPPLIED BY GEORGE R. ROBERTS CO., OR APPROVED EQUAL
4. DIAMETER TBD BASED UPON THE MANUFACTURER'S RECOMMENDATION.

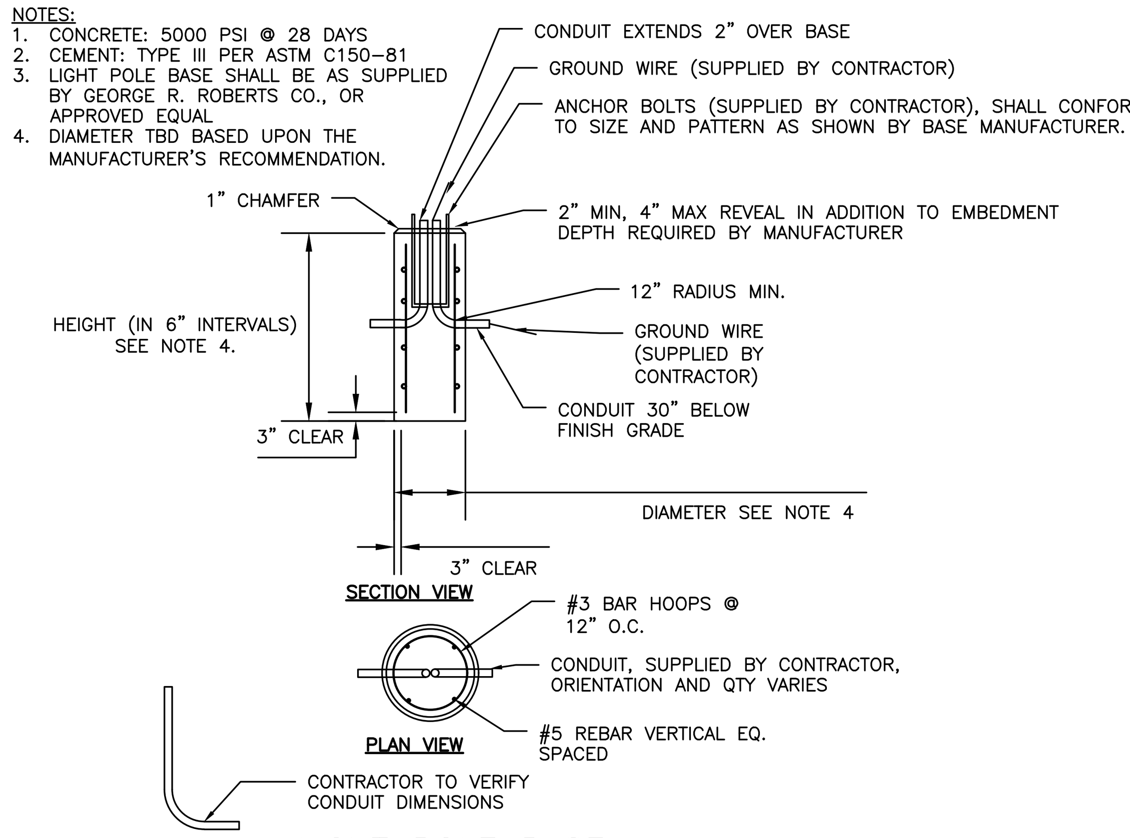

LIGHT POLE BASE
NOT TO SCALE

NOTES:

1. ALL RAMPS SHALL COMPLY WITH CITY OF BIDDEFORD AND ADA STANDARDS.
2. SIDEWALK MATERIAL SHALL BE PER CITY SIDEWALK MATERIAL POLICY.
3. FLARED SECTIONS SHOULD MATCH SURFACE MATERIAL USED FOR SIDEWALK CONSTRUCTION.

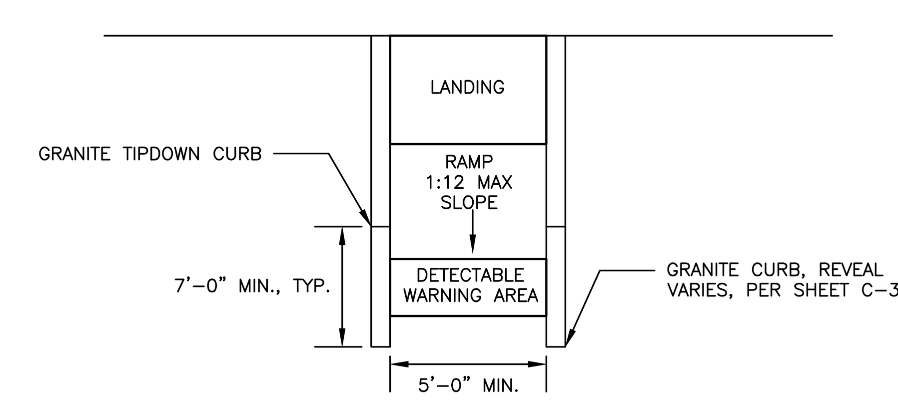

DESIGN ELEMENT	SLOPE IN DIRECTION OF TRAVEL	CROSS SLOPE
APPROACH	8.33% MAX	2%
LANDING	2%	2%
RAMP	8.33% MAX	MATCH STREET GRADE
SIDEWALK	PER C–30	2%

SIDEWALK RAMP LAYOUT
NOT TO SCALE

PERMIT LEVEL
NOT ISSUED FOR CONSTRUCTION

ISSUED FOR	BY / DATE
SRCC	PFH 1/28/2021
CITY REVIEW	PFH 2/3/2021

DRAWING NAME: SITE DETAILS – 2

PROJECT NAME/ADDRESS: 1 GOOCH STREET REDEVELOPMENT

CLIENT/OWNER OF RECORD: TOM WATSON & CO.
188 STATE STREET, 3RD FLOOR, PORTLAND ME 04101

A C O R N ENGINEERING, INC.

THIS PLAN SHALL NOT BE MODIFIED WITHOUT WRITTEN PERMISSION FROM ACORN ENGINEERING, INC. ANY ALTERATIONS, AUTHORIZED OR OTHERWISE, SHALL BE AT THE USER'S SOLE RISK AND WITHOUT LIABILITY TO ACORN ENGINEERING, INC.

ACORN ENGINEERING, INC.
PO BOX 3372, PORTLAND MAINE 04101
(207) 775–2655

FILE: 1093.10_CIVIL
JN: 1093.10
SCALE: AS NOTED
DESIGNED BY: PFH
DRAWN BY: ZMS
CHECKED BY: WHS

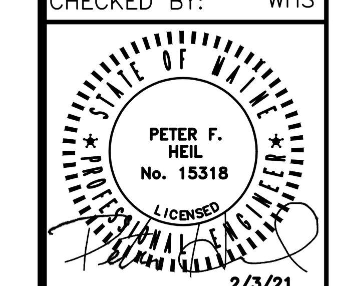

DRAWING NO.
C-41

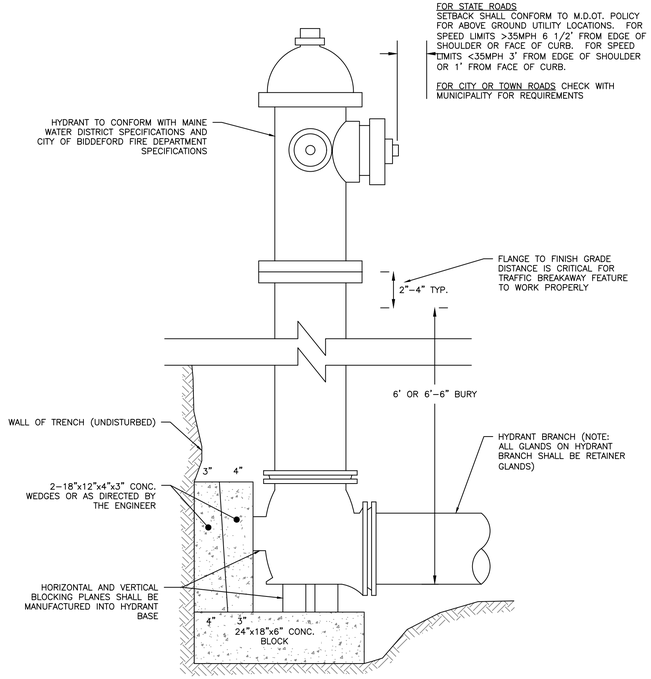

TYPICAL HYDRANT INSTALLATION DETAIL

NOT TO SCALE

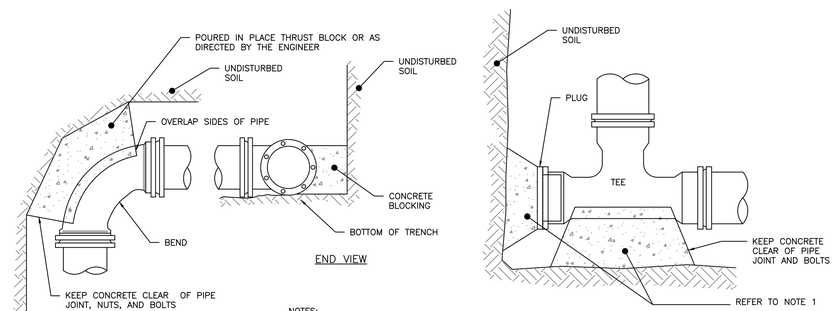

NOTES:
1. IF DEAD END WITH TEE, THRUST BLOCK WOULD BE REQUIRED AS DIRECTED BY THE ENGINEER
2. SEE THRUST/RETAINER GLAND SCHEDULE FOR TYPE OF BLOCKING TO BE USED ON BENDS

THRUST BLOCKING: REGULAR BEND

NOT TO SCALE

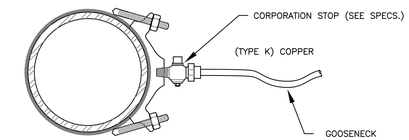

SERVICE SADDLE: 1–1/2" AND 2" C.C. THREAD

NOT TO SCALE

NOTES:

1. ALL MATERIALS AND INSTALLATION PROCEDURES MUST COMPLY WITH THE CITY OF PORTLAND WATER DISTRICT (PWD) SPECIFICATIONS.
2. CURB STOP BALL VALVE TO BE MADE OF COPPER OR BRASS UNLESS OTHERWISE NOTED BY THE PORTLAND WATER DISTRICT.
3. SERVICE LINE TO BE MADE OF TYPE K COPPER.
4. CONCRETE BLOCKING SHALL BE ADDED TO THE BASE OF THE CURB STOP TO PROVIDE STRUCTURAL SUPPORT FOR THE CURB STOP AND SERVICE BOX.

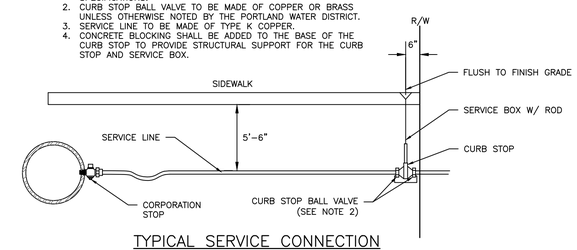

TYPICAL SERVICE CONNECTION

NOT TO SCALE

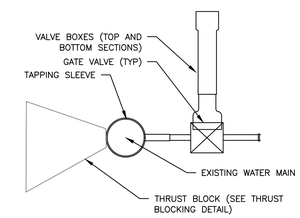

SIDE VIEW

TAPPING SLEEVE AND VALVE

NOT TO SCALE

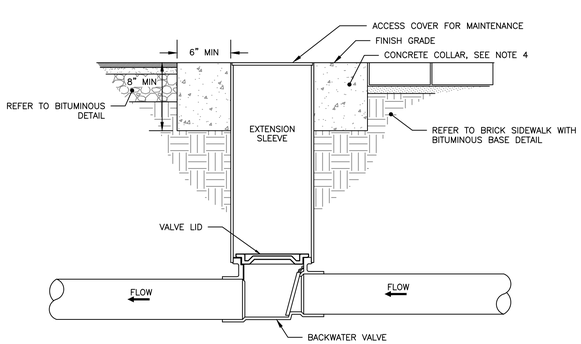

NOTES:

1. BACKFLOW VALVE TO BE PROVIDED BY AGRI DRAIN CORPORATION OR AN APPROVED EQUAL.
2. VALVE TO BE INSTALLED TO MANUFACTURER'S SPECIFICATIONS AND COMPLY WITH RULES AND REGULATIONS AS OUTLINED IN SECTION 2 OF THE CITY OF PORTLAND TECHNICAL MANUAL.
3. VALVE SHALL BE INSTALLED WITH A VALVE BOX AND COVER TO PROVIDE EASY ACCESS AND MAINTENANCE; VALVE COVER SHALL STATE 'SEWER' ON LID FLUSH TO SURFACE. REFER TO VALVE & BOX COVER DETAIL FOR ADDITIONAL INFORMATION.
4. CONCRETE COLLAR AT A MINIMUM 24–HOUR COMPRESSIVE STRENGTH OF 3,000 PSI.

BACKFLOW VALVE ASSEMBLY

NOT TO SCALE

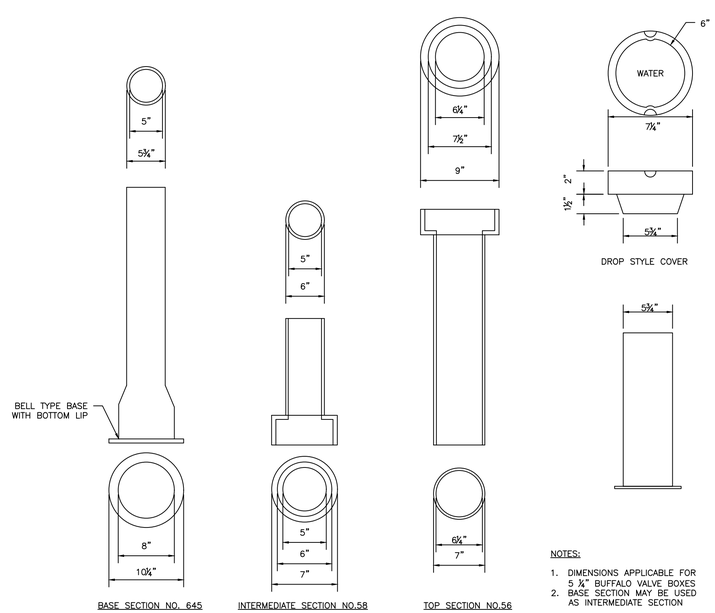

NOTES:

1. DIMENSIONS APPLICABLE FOR 5 ¼" BUFFALO VALVE BOXES
2. BASE SECTION MAY BE USED AS INTERMEDIATE SECTION

VALVE BOX & COVER

NOT TO SCALE

NOTES:

1. THE WATER TRENCH SHALL BE CONSTRUCTED IN ACCORDANCE WITH THE PORTLAND WATER DISTRICT STANDARD DETAILS & SPECIFICATIONS.
2. IF LESS THAN 5'–6" OF COVER IS POSSIBLE ADD TWO LAYERS OF 2–INCH "BLUE DOW" RIGID INSULATION.

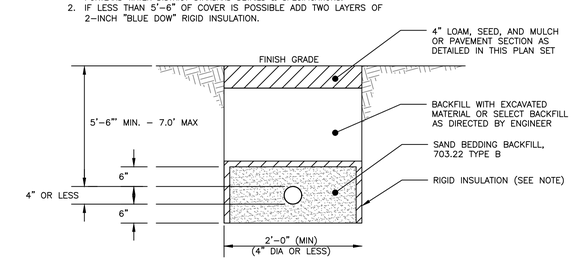

WATER SERVICE TRENCH SECTION DETAIL

NOT TO SCALE

PERMIT LEVEL
NOT ISSUED FOR CONSTRUCTION

ISSUED FOR	BY / DATE
SRCC	PFH 1/28/2021
CITY REVIEW	PFH 2/3/2021

DRAWING NAME: UTILITY DETAILS – 1

PROJECT NAME/ ADDRESS: 1 GOOCH STREET REDEVELOPMENT

CLIENT/OWNER OF RECORD: TOM WATSON & CO. 188 STATE STREET, 3RD FLOOR, PORTLAND ME 04101

ACORN ENGINEERING, INC.

ACORN ENGINEERING, INC. PO BOX 4322, PORTLAND, MAINE 04101 (207) 775-2655

THIS PLAN SHALL NOT BE MODIFIED WITHOUT WRITTEN PERMISSION FROM ACORN ENGINEERING, INC. ANY MODIFICATIONS, WHETHER OR OTHERWISE, SHALL BE AT THE USER'S SOLE RISK AND WITHOUT LIABILITY TO ACORN ENGINEERING, INC.

FILE:	1093.10_CIVIL
JN:	1093.10
SCALE:	AS NOTED
DESIGNED BY:	PFH
DRAWN BY:	ZMS
CHECKED BY:	WHS

STATE OF MAINE PETER F. HEIL No. 15318 LICENSED 2/3/21

DRAWING NO.

C-42

NOTES:

1. REFER TO THE GRADING AND DRAINAGE PLANS FOR ADDITIONAL INFORMATION

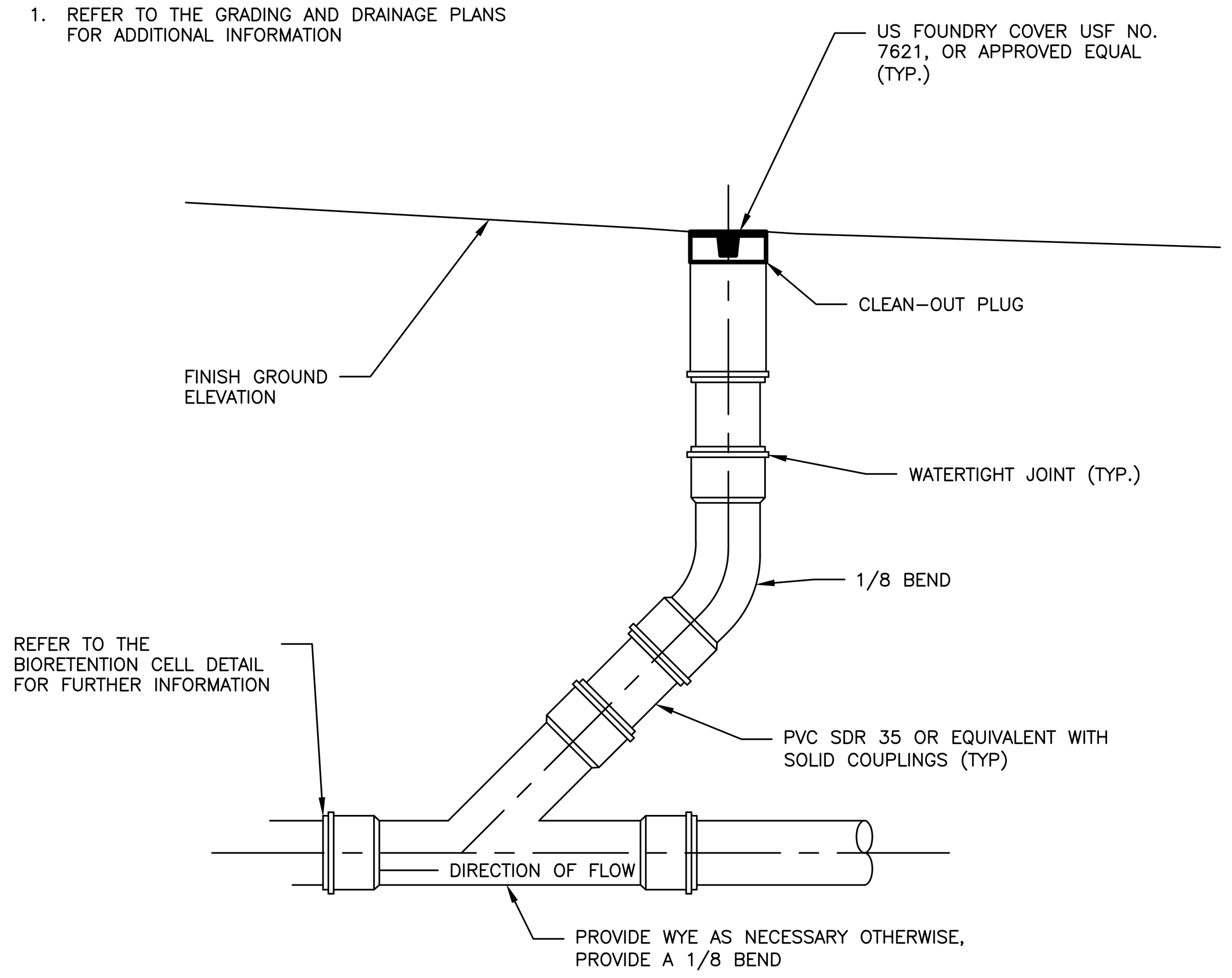

CLEANOUT DETAIL

NOT TO SCALE

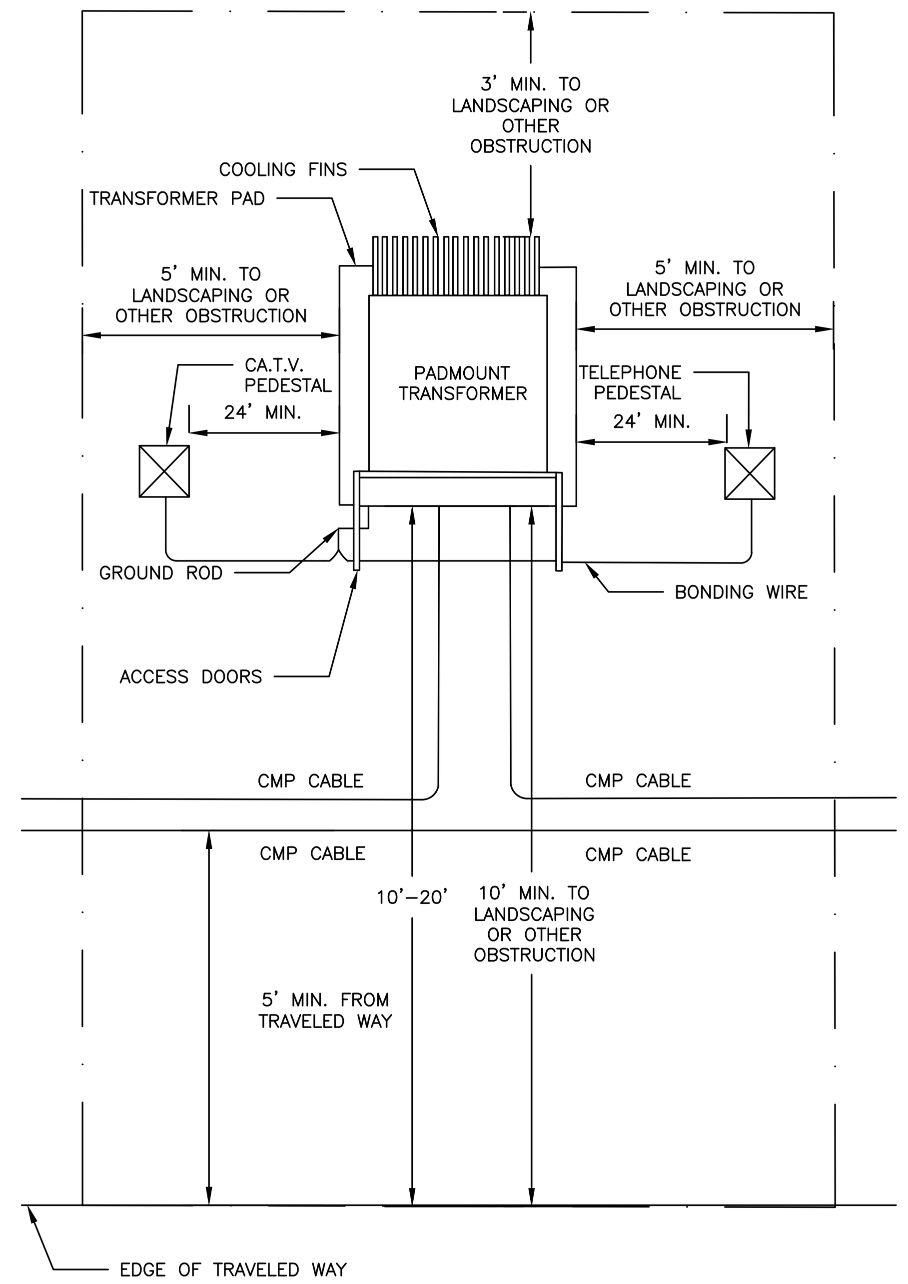

PAD MOUNTED TRANSFORMER

NOT TO SCALE

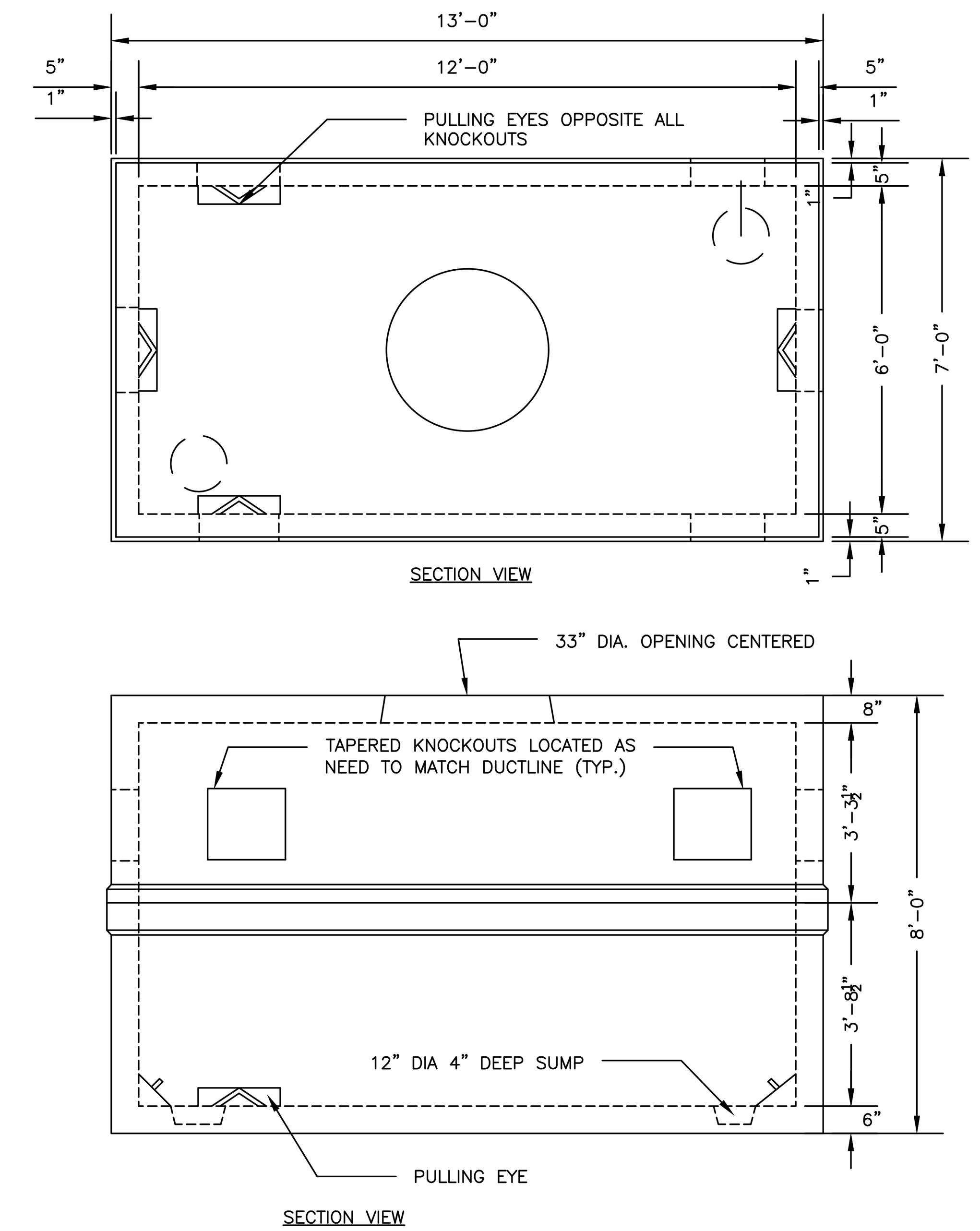

38Y MANHOLE

NOT TO SCALE

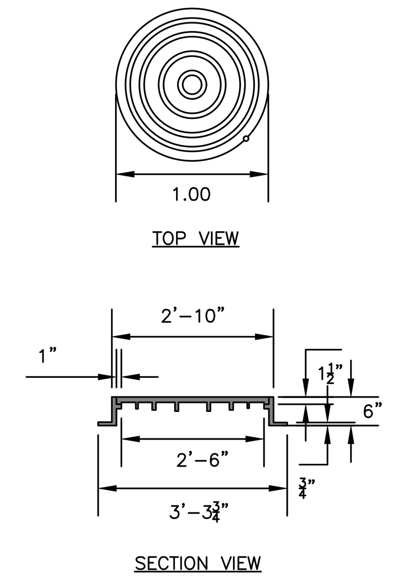

COVER DETAIL

NOTES:

1. VAULT SHALL BE DESIGNED TO WITHSTAND A H2O WHEEL LOADING WITH 6 INCHES OF OVERBURDERN. THE DESIGN SHALL ALSO COMPLY WITH THE STRENGTH REQUIREMENTS OF NATIONAL ELECTRICAL SAFETY CODE SECTION 323A. PROVIDE SHOW DRAWINGS STAMPED BY A STATE OF MAINE REGISTERED PROFESSIONAL ENGINEER UPON REQUEST.
2. JOINTS SHALL BE SEALED WITH ASPHALT.
3. MOUNTING FOR CABLE ROCKS, ETC. CAST IN WALL BY FURTHER PLANS OR FIELD LOCATED.
4. MANHOLE SHALL BE SET ON A SUITABLE GRAVEL BASE.
5. CABLES ARE TO BE RACKED ALONG ONE WALL ONLY.
6. COVER: BRICK AS REQUIRED TO REACH FINISHED GRADE.

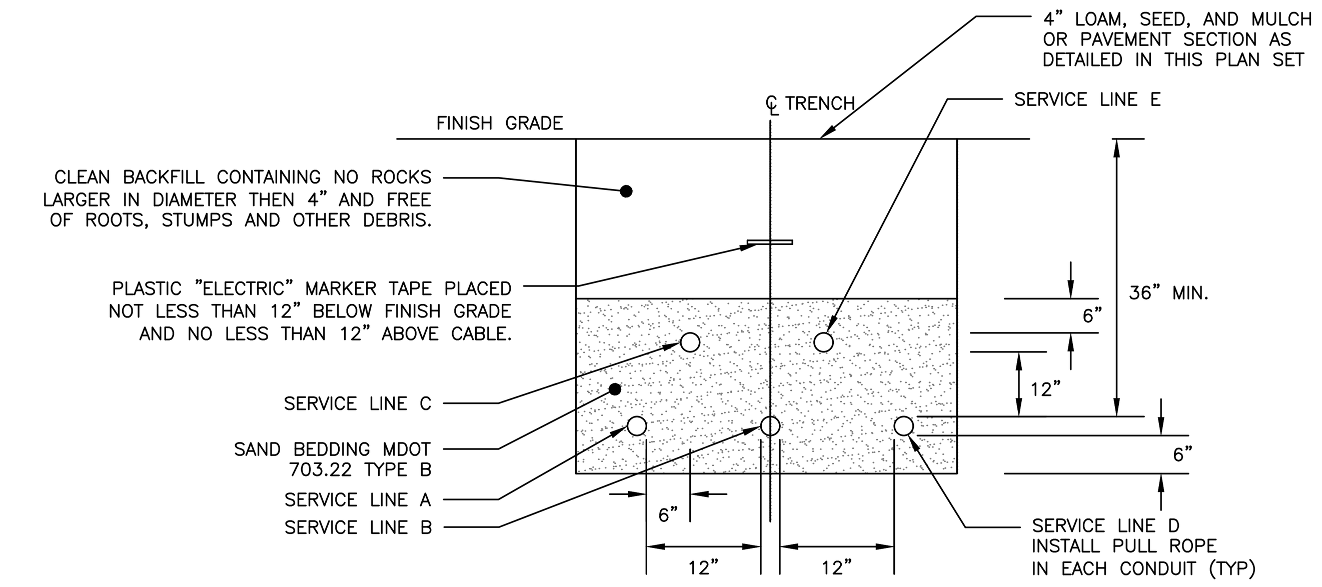

CONDUIT TYPE				
SERVICE	CONDUIT SIZE	GRASS AND PAVED AREAS	UTILITY	REMARKS
A	5"	SCHEDULE 40 PVC ELECTRICAL GRADE	PRIMARY POWER	SEE NOTE 1
B	5"	SCHEDULE 40 PVC ELECTRICAL GRADE	PRIMARY POWER	SEE NOTE 1
C	2–4"	SCHEDULE 40 PVC	COMMUNICATION	–
D	5"	SCHEDULE 40 PVC ELECTRICAL GRADE	SPARE	SEE NOTE 1
E	2–4"	SCHEDULE 40 PVC	CABLE	–

NOTES:

1. ONE CONDUIT CAPPED FOR SPARE, PROVIDE GALVANIZED STEEL LONG SWEEP AT RISER POLE AND EXTEND GALVANIZED CONDUIT TO 10" ABOVE GRADE AT POLE WITH STAND–OFF BRACKETS.
2. MINIMUM SEPARATION OF 24 INCHES BETWEEN PRIMARY CABLE/CONDUIT AND GAS LINES SHALL BE MAINTAINED.
3. CONDUITS WITHIN THE CITY RIGHT–OF–WAY SHALL BE ENCASED IN CONCRETE.
4. FINAL SIZE OF CONDUITS TO BE SPECIFIED BY MEP, ELECTRICIAN, OR DESIGN/BUILD ELECTRICAL CONTRACTOR.

UTILITY TRENCH – PRIMARY AND SECONDARY POWER, TELEPHONE, AND CABLE

NOT TO SCALE

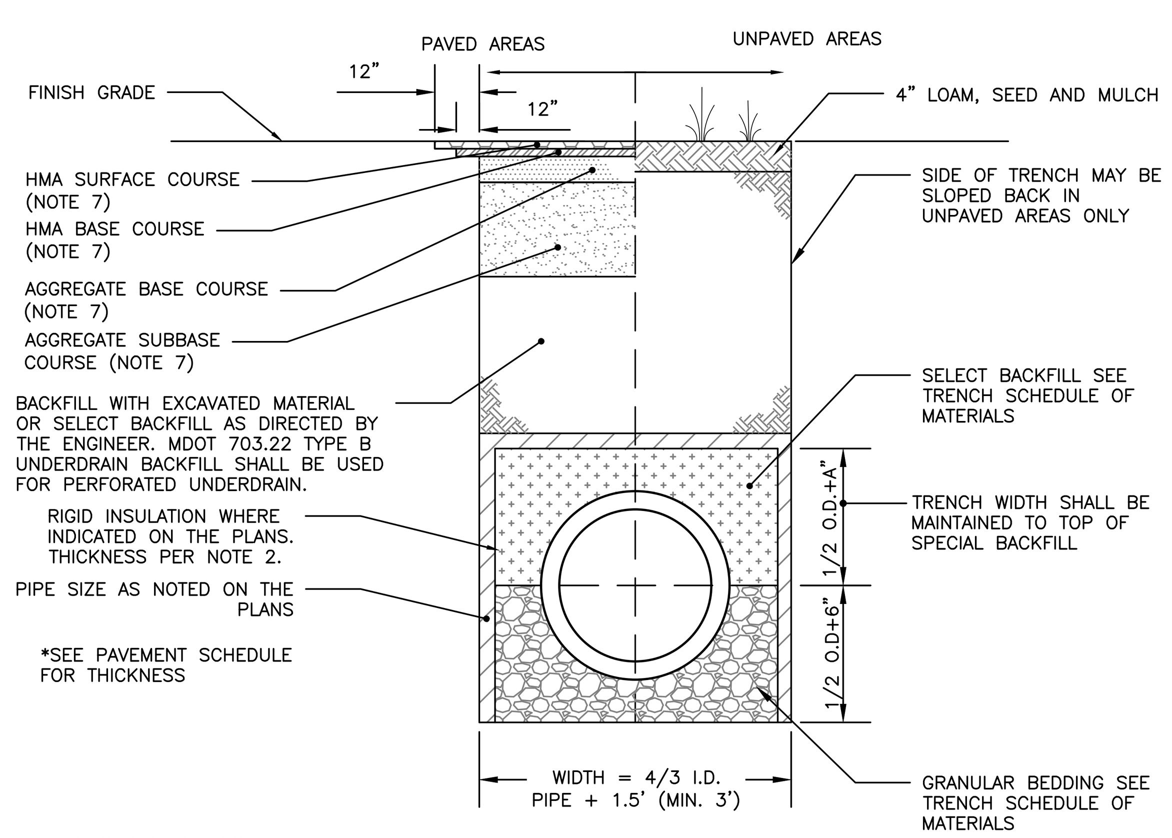

ALLOWABLE PIPE MATERIALS:

- REINFORCED CONCRETE PIPE (RCP) MIN. STRENGTH OF CLASS III
- PVC RING TYPE SEWER (SDR 35) OR EQUIVALENT, MIN PS–46 RATING
- PVC RING TYPE SEWER PIPE MEETING ASTM F 789
- DUCTILE IRON PIPE (DIP)
- ADS N–12 HP TRIPLE–WALL MIN PS–46 RATING
- ADS SANITITE HP MIN. PS–46

SCHEDULE OF MATERIALS		
TYPE OF PIPE	GRANULAR BEDDING	SELECT BACKFILL
CMP DUCTILE IRON RCP	MDOT 703.22 TYPE B UD BACKFILL	MDOT 703.22 TYPE B UD BACKFILL
PVC/HDPE	MDOT 703.22 TYPE C 3/4" CRUSHED STONE	MDOT 703.22 TYPE B UD BACKFILL
CMP	MDOT 703.22 TYPE C 3/4" CRUSHED STONE	MDOT 703.22 TYPE C 3/4" CRUSHED STONE

NOTES:

1. BRACING AND SHEETING OR OTHER TRENCH PROTECTION TO BE PROVIDED TO MEET APPLICABLE STATE AND O.S.H.A. SAFETY STANDARDS. ALL SUCH TRENCH PROTECTION TO BE THE RESPONSIBILITY OF THE CONTRACTOR.
2. STORM DRAIN COVER BETWEEN 2' AND 3' SHALL INCLUDE 4" OF RIGID INSULATION. COVER BETWEEN 3' AND 4' SHALL INCLUDE 2' RIGID INSULATION. OTHER UTILITIES: ADD 2" OF RIGID INSULATION FOR EACH FOOT ABOVE MINIMUM DEPTH.
3. INSTALL WARNING TAPE DIRECTLY ABOVE UTILITIES AT THE TOP OF SUBGRADE.
4. MINIMUM COVER
   4.1. 2'–0" – STORM DRAIN
   4.2. 5'–0" – SEWER
5. NO TREES SHALL BE PLANTED WITHIN 5' OF A SEWER PIPE OR SERVICE
6. THIS DETAIL SHALL BE APPLIED ONLY TO DRAINAGE PIPE TRENCHES OUTSIDE OF THE CITY OF BIDDEFORD ROW.
7. THICKNESS AS NOTED BY SURFACE DETAILS
8. ALL PROPOSED TREES PLANTED WITHIN 10' OF A STORM OR SEWER PIPE SHALL BE PLANTED AT A DEPTH NO GREATER THAN 3' DEEP. PERMEABLE LANDSCAPE FABRIC SHALL CREATE A ROOT BARRIER AROUND THE PIPES. CONTRACTOR SHALL COORDINATE WITH THE LANDSCAPE DRAWINGS.

STORM DRAIN AND SEWER TYPICAL TRENCH SECTION WITHIN PROPERTY

NOT TO SCALE

NOTES:

1. WHERE DANGER OF PLOW OR TRAFFIC DAMAGE EXISTS, BARRIERS CONSISTING OF CONCRETE FILLED 6 INCH IPS STEEL POSTS SET 4 FEET DEEP SHALL BE PROVIDED FOR PROTECTION (PRESSURE TREATED 6X6 INCH MIN. TIMBER POSTS MAY BE SUBSTITUTED IN RESIDENTIAL AREAS). POSTS SHALL NOT INTERFERE WITH TRANSFORMER ACCESS. GENERALLY THE POSTS SHALL BE LOCATED NEAR THE CORNERS OF THE TRANSFORMERS.
2. THE SETBACKS DEPICT CLEARANCES FROM OBSTRUCTIONS INCLUDING TREES, SHRUBS, AND FENCES.
3. THERE SHALL BE NO OPENINGS IN THE BUILDING WALL IN BACK OF, BESIDE, OR OVER THE TRANSFORMER UNLESS THE TRANSFORMER IS A MIN. OF 10 FEET FROM THE BUILDING.
4. SIDE CLEARANCES FROM DOORS OR WINDOWS SHALL NOT BE LESS THAN 10 FEET.
5. THERE SHALL BE A MIN. OF 10 FEET BETWEEN THE TRANSFORMER AND ANY GAS METER/REGULATOR, GAS RELIEF VALVE, GAS VENT DISCHARGE, GAS FILLING CONNECTION, OR PROPANE TANK. SOME INSURANCE COMPANIES MAY REQUIRE INCREASED CLEARANCES.
6. TRANSFORMER SHALL BE LOCATED FAR ENOUGH AWAY FROM BUILDING OVERHANGS SO THAT THEY WILL NOT BE SUBJECT TO DAMAGE BY FALLING ICE AND SNOW.
7. IF TRANSFORMER IS NOT INSTALLED IMMEDIATELY UPON THE INSTALLATION OF THE CABLE IN THE PAD, THE DEVELOPER SHALL PROVIDE AND INSTALL A CMP APPROVED CONCRETE, STEEL, OR FIBERGLASS COVER OVER THE PAD OPENING TO ELIMINATE EXPOSURE OF THE CABLE.

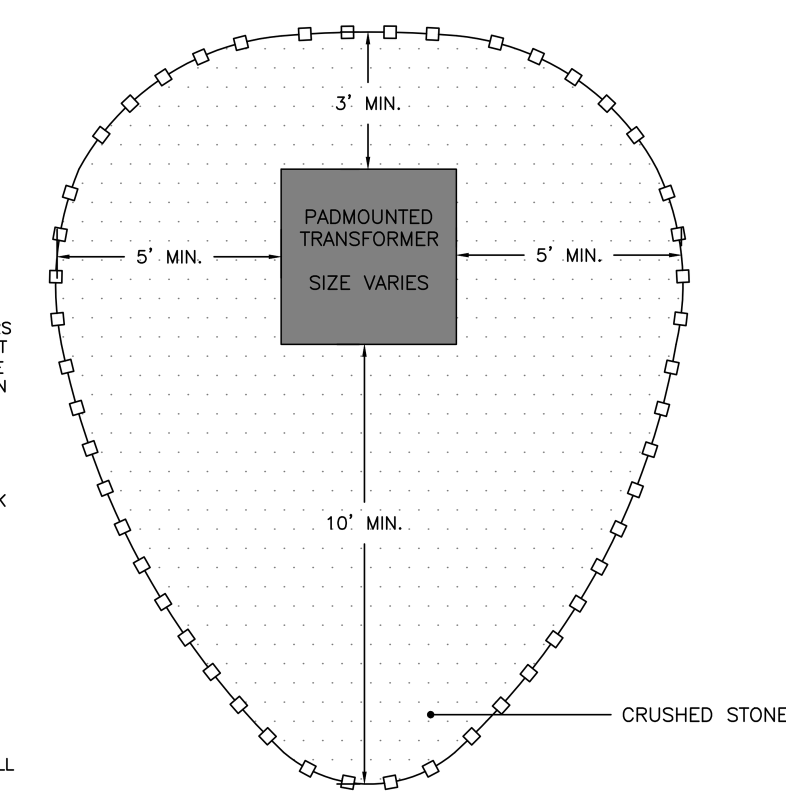

CMP TRANSFORMER SETBACKS

NOT TO SCALE

DESIGN NOTES:

1. ANY ALTERNATE TRENCHING METHODS SHALL BE APPROVED IN ADVANCE BY THE CITY.
2. ALL CONSTRUCTION METHODS SHALL CONFORM TO THE CITY OF BIDDEFORD TECHNICAL STANDARDS FIGURE II–2.
3. BRACING & SHEETING OR OTHER TRENCH PROTECTION TO BE PROVIDED TO MEET APPLICABLE STATE AND O.S.H.A SAFETY STANDARDS. ALL SUCH TRENCH PROTECTION SHALL BE THE RESPONSIBILITY OF THE CONTRACTOR.
4. WHERE APPLICABLE, PERFORATIONS IN STORM DRAIN (PERF. SD) SHALL BE ORIENTED UP.
5. ALL STORM DRAINS SHALL BE PVC SDR 35 MIN PS–46 RATING OR OR IN ACCORDANCE WITH CITY OF BIDDEFORD TECHNICAL MANUAL , SECTION 2 – SANITARY SEWER AND STORM DRAIN – PART 2.5.2
6. IN PAVED AREAS, DEPTHS OF GRAVEL AND HOT MIX ASPHALT PAVEMENT SHALL MATCH THE GREATER OF EXISTING CONDITIONS OR THE REQUIREMENTS FOR THE CORRESPONDING STREET CLASSIFICATION.
7. THIS DETAIL SHALL BE APPLIED ONLY TO PIPE TRENCHES WITHIN OF THE CITY OF BIDDEFORD R.O.W.
8. STORM DRAIN COVER BETWEEN 2' AND 3' SHALL INCLUDE 4" OF RIGID INSULATION. COVER BETWEEN 3' AND 4' SHALL INCLUDE 2" RIGID INSULATION. OTHER UTILITIES: ADD 2" OF RIGID INSULATION FOR EACH FOOT ABOVE MINIMUM DEPTH.
9. DEPTH OF BITUMINOUS PAVEMENT AND AGGREGATE COURSES SHALL BE DETERMINED BY STREET CLASSIFICATION.
10. DIMENSION B SHALL BE SUFFICIENT TO ALLOW CRUSHED STONE BEDDING TO BE PLACED AND COMPACTED UNDER THE HAUNCHES OF THE PIPE; BUT IN ALL CASES DIMENSION B SHALL BE AT LEAST 9".
11. DIMENSION A IS THE MAXIMUM WIDTH ALLOWED FOR CALCULATING PAY QUANTITIES UNDER GRANULAR BORROW, CRUSHED STONE, STRUCTURAL EARTH EXCAVATION, AND STRUCTURAL ROCK EXCAVATION. DIMENSION A SHALL BE BASED ON PIPE DIAMETER D, AS SET FORTH IN THE TABLE BELOW.

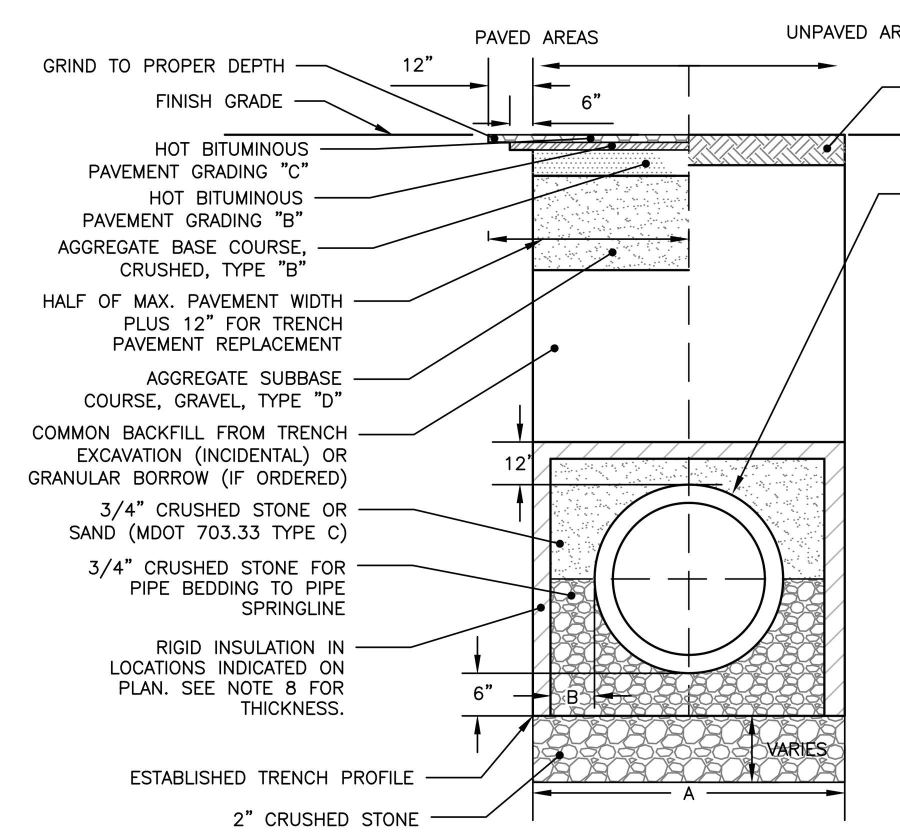

TRENCH WIDTH	
PIPE DIAMETER (IN)	MAX. TRENCH WIDTH, A (FT)
4	4
6	4
8	4
10	4
12	4
15	4
18	5
21	5
24	5
36	7
48	8
54	8
60	9

TYPICAL PIPE TRENCH DETAIL WITHIN RIGHT–OF–WAY

NOT TO SCALE

PERMIT LEVEL
NOT ISSUED FOR
CONSTRUCTION

ISSUED FOR	BY / DATE
SRCC	PFH 1/28/2021
CITY REVIEW	PFH 2/3/2021

DRAWING NAME: UTILITY DETAILS – 2

PROJECT NAME/ADDRESS: 1 GOOCH STREET REDEVELOPMENT

CLIENT/OWNER OF RECORD: TOM WATSON & CO. 188 STATE STREET, 3RD FLOOR, PORTLAND ME 04101

A C O R N ENGINEERING, INC.
ACORN ENGINEERING, INC. PO BOX 3372, PORTLAND MAINE 04101 (207) 775-2655

THIS PLAN SHALL NOT BE MODIFIED WITHOUT WRITTEN PERMISSION FROM ACORN ENGINEERING, INC. ANY ALTERATIONS, AUTHORIZED OR OTHERWISE, SHALL BE AT THE USER'S SOLE RISK AND WITHOUT LIABILITY TO ACORN ENGINEERING, INC.

FILE: 1093.10_CIVIL

JN: 1093.10

SCALE: AS NOTED

DESIGNED BY: PFH

DRAWN BY: ZMS

CHECKED BY: WHS

STATE OF MAINE PETER F. HEIL No. 15318 LICENSED PROFESSIONAL ENGINEER 2/3/21

DRAWING NO.

C-43

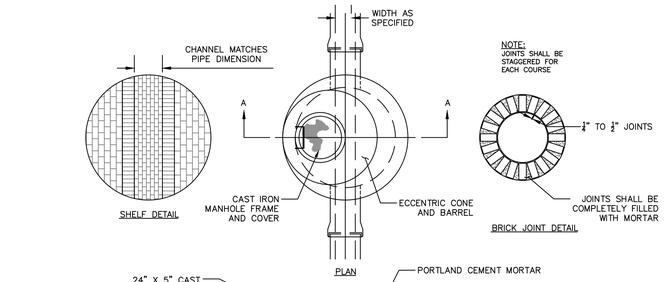

NOTES:

1. MANHOLES MAY BE CONSTRUCTED OF PRECAST REINFORCED CONCRETE, OR CAST IN PLACE.
2. PRECAST REINFORCED CONE BARREL MANUFACTURED PER ASTM SPEC. C-478.
3. ALL MANHOLE RISERS SHALL BE ETHERIDGE 24" OR APPROVAL EQUAL.
4. ALL SANITARY MANHOLES SHALL HAVE A WATERPROOFING COATING APPLIED TO THE EXTERIOR SURFACE.
5. CASTINGS SHALL CONFORM TO ASTM DESIGNATION A48-CLASS 35.

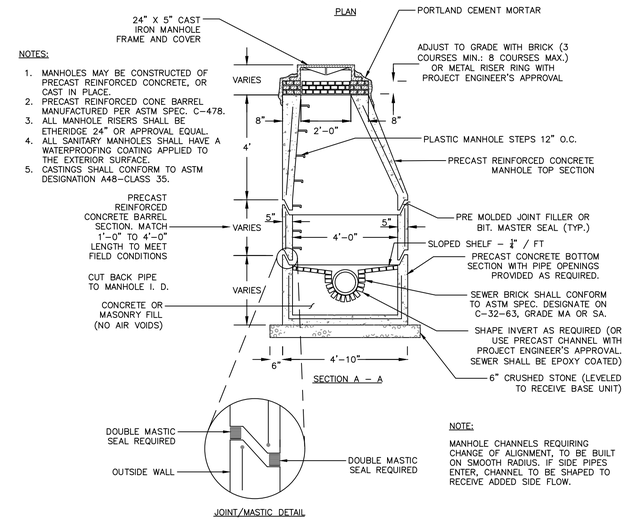

NOTE:

MANHOLE CHANNELS REQUIRING CHANGE OF ALIGNMENT, TO BE BUILT ON SMOOTH RADIUS. IF SIDE PIPES ENTER, CHANNEL TO BE SHAPED TO RECEIVE ADDED SIDE FLOW.

PRECAST CONCRETE MANHOLE

NOT TO SCALE

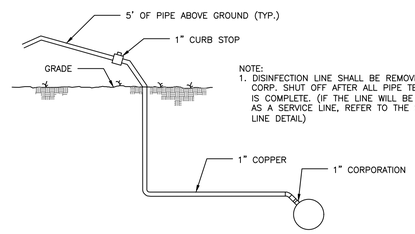

NOTE:
1. DISINFECTION LINE SHALL BE REMOVED AND CORP. SHUT OFF AFTER ALL PIPE TESTING IS COMPLETE. (IF THE LINE WILL BE USED AS A SERVICE LINE, REFER TO THE SERVICE LINE DETAIL)

DISINFECTION LINE DETAIL

NOT TO SCALE

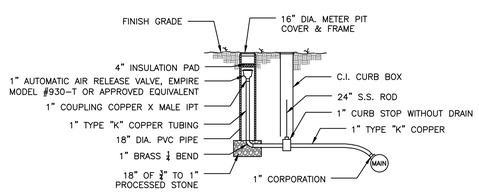

AIR RELEASE VALVE DETAIL

NOT TO SCALE

NOTES:

1. LOCATION WITH WARNING TAPE SHALL BE INSTALLED OVER CENTERLINE OF PIPE AT A MAXIMUM OF 24 INCHES BELOW FINISH GRADE.
2. SITE CONTRACTOR TO COORDINATE CONNECTION OF SEWER LATERAL TO STRUCTURE PLUMBING WITH ARCHITECTURAL CONTRACTOR.
3. CONNECTION OF PROPOSED SEWER LATERAL TO STRUCTURE PLUMBING SHOULD INCORPORATE USE OF SIMILAR PIPE MATERIALS. IN THE CASE OF DISSIMILAR PIPES BEING USED, A FERNCO FLEXIBLE COUPLING SHALL BE USED.

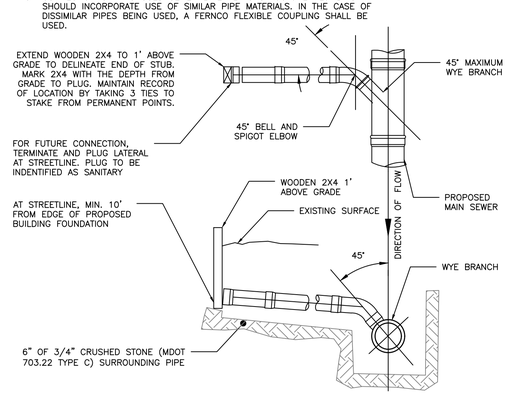

SEWER TEE/WYE CONNECTION DETAIL

NOT TO SCALE

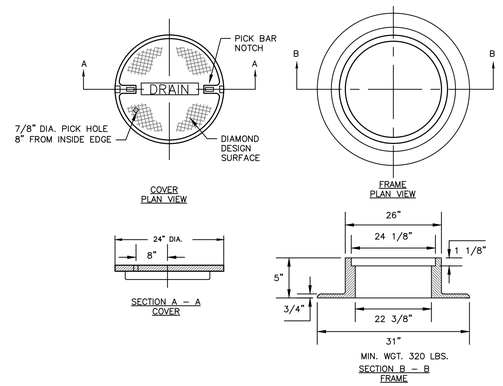

NOTES:

1. ALL MANHOLE COVERS SHALL BE SOLID AND SHALL HAVE ONE 7/8" DIAMETER DRILLED PICK HOLE, LOCATED 8" FROM THE CENTER OF THE COVER
2. ALL SANITARY AND STORMWATER/DRAIN MANHOLE COVERS SHALL BE 24" x 5".
3. ALL SANITARY MANHOLE COVERS AND SHALL HAVE "SEWER" CAST INTO THE COVER.
4. ALL STORMWATER/DRAIN MANHOLE COVERS SHALL HAVE "DRAIN" CAST INTO THE COVER.
5. APPROVED MANHOLE FRAMES:
5.1. EAST JORDAN = 1690Z
5.2. NEENAH = R-1496
5.3. OR APPROVED EQUAL
6. APPROVED MANHOLE COVERS
6.1. EAST JORDAN = 2160A
6.2. NEENAH = R-1496
6.3. OR APPROVED EQUAL

CAST IRON MANHOLE COVER AND FRAME

NOT TO SCALE

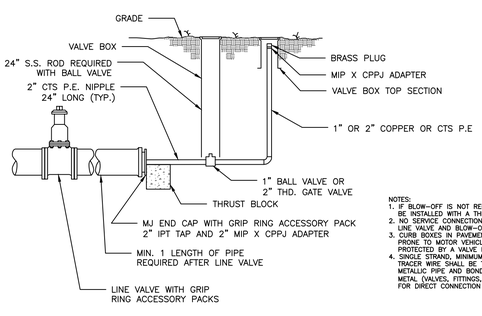

NOTES:
1. IF BLOW-OFF IS NOT REQUIRED, CAP CAN BE INSTALLED WITH A THRUST BLOCK.
2. NO SERVICE CONNECTIONS BETWEEN LINE VALVE AND BLOW-OFF ASSEMBLY.
3. CURB BOXES IN PAVEMENT OR IN GRAVEL PRONE TO MOTOR VEHICLE TRAFFIC SHALL BE PROTECTED BY A VALVE BOX TOP.
4. SINGLE STRAND, MINIMUM 12 GAUGE, METALLIC TRACER WIRE SHALL BE TAPED TO ALL NON-METALLIC PIPE AND BONDED TO ASSOCIATED METAL (VALVES, FITTINGS, ETC.) AT THE ENDS FOR DIRECT CONNECTION SIGNAL LOCATING.

1-INCH OR 2-INCH BLOW-OFF DETAIL

NOT TO SCALE

PERMIT LEVEL
NOT ISSUED FOR
CONSTRUCTION

ISSUED FOR	BY	DATE
SRCC	PFH	1/28/2021
CITY REVIEW	PFH	2/3/2021

DRAWING NAME: UTILITY DETAILS - 3

PROJECT NAME/ ADDRESS: 1 GOOCH STREET REDEVELOPMENT

CLIENT/OWNER OF RECORD: TOM WATSON & CO. 188 STATE STREET, 3RD FLOOR, PORTLAND ME 04101

ACORN ENGINEERING, INC.
THIS PLAN SHALL NOT BE MODIFIED WITHOUT WRITTEN PERMISSION FROM ACORN ENGINEERING, INC. ANY MODIFICATIONS, WITHOUT WRITTEN PERMISSION OR OTHERWISE, SHALL BE AT THE USER'S SOLE RISK AND WITHOUT LIABILITY TO ACORN ENGINEERING, INC.
ACORN ENGINEERING, INC.
PO BOX 271, YARMOUTH, MAINE 04101
(207) 775-2655

FILE:	1093.10_CIVIL
JN:	1093.10
SCALE:	AS NOTED
DESIGNED BY:	PFH
DRAWN BY:	ZMS
CHECKED BY:	WHS

STATE OF MAINE
PETER F. HEIL
No. 15318
LICENSED
2/3/21

DRAWING NO.
C-44

1. ALL CONCRETE SHALL HAVE A MINIMUM ULTIMATE COMPRESSIVE STRENGTH OF 4000 lbs. PER SQ. INCH AT THE END OF 28 DAYS, UNLESS OTHERWISE NOTED.
2. MANHOLES MAY BE CONSTRUCTED OF PRECAST REINFORCED CONCRETE, OR CAST IN PLACE.
3. PRECAST REINFORCED CONE BARREL MANUFACTURED PER ASTM SPEC. C-478.
4. ALL STORM AND SEWER MANHOLE COVERS SHALL BE SOLD AND SHALL HAVE ONE ⅞" DIAMETER DRILLED PICK HOLE LOCATED 8" FROM THE CENTER OF THE COVER.
5. ALL SANITARY MANHOLE COVERS SHALL HAVE "SEWER" CAST INTO THE COVER. ALL STORMWATER/DRAIN MANHOLE COVERS SHALL HAVE "DRAIN" CAST INTO THE COVER.
6. ALL MANHOLE RISERS SHALL BE ETHERIDGE 24" OR APPROVAL EQUAL.
7. SEWER BRICK SHALL CONFORM TO ASTM SPEC. DESIGNATE ON C-32-63, GRADE MA AND SA.
8. ALL SANITARY MANHOLES SHALL HAVE A WATERPROOFING COATING APPLIED TO THE EXTERIOR SURFACE.
9. CATCH BASIN FRAMES FOR TYPE A4 CATCH BASIN CURB INLETS SHALL BE ETHERIDGE DR5A OR APPROVED EQUAL.
10. CASTINGS SHALL CONFORM TO ASTM DESIGNATION A48-CLASS 35.
11. EXISTING MANHOLES, CATCH BASINS, FRAMES, AND COVERS SHALL BE SALVAGED BY THE CONTRACTOR, AND SHALL REMAIN THE PROPERTY OF THE CITY OF PORTLAND.
12. ALL CATCH BASIN OUTLETS SHALL BE INSTALLED WITH A CASCO TRAP PER DETAIL.

GENERAL NOTES FOR MANHOLES AND CATCH BASINS

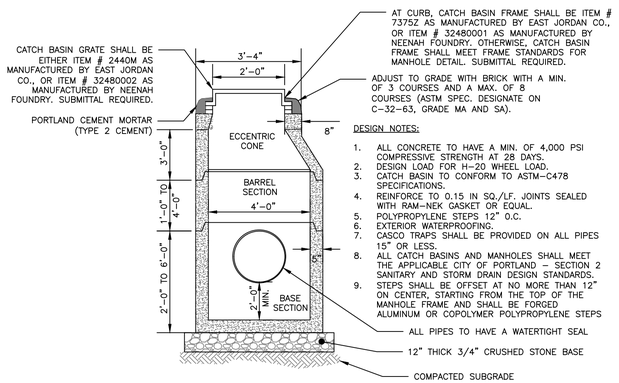

DESIGN NOTES:

1. ALL CONCRETE TO HAVE A MIN. OF 4,000 PSI COMPRESSIVE STRENGTH AT 28 DAYS.
2. DESIGN LOAD FOR H-20 WHEEL LOAD.
3. CATCH BASIN TO CONFORM TO ASTM-C478 SPECIFICATIONS.
4. REINFORCE TO 0.15 IN SQ./LF. JOINTS SEALED WITH RAM-NEK GASKET OR EQUAL.
5. POLYPROPYLENE STEPS 12" O.C.
6. EXTERIOR WATERPROOFING.
7. CASCO TRAPS SHALL BE PROVIDED ON ALL PIPES 15" OR LESS.
8. ALL CATCH BASINS AND MANHOLES SHALL MEET THE APPLICABLE CITY OF PORTLAND – SECTION 2 SANITARY AND STORM DRAIN DESIGN STANDARDS.
9. STEPS SHALL BE OFFSET AT NO MORE THAN 12" ON CENTER, STARTING FROM THE TOP OF THE MANHOLE FRAME AND SHALL BE FORGED ALUMINUM OR COPOLYMER POLYPROPYLENE STEPS

4'-0" DIAMETER PRECAST CATCH BASIN/MANHOLE
NOT TO SCALE

NOTES:

1. APPROVED CATCH BASIN FRAMES:
   1.1. EAST JORDAN = 7375Z
   1.2. NEENAH = R-3248
   1.3. OR APPROVED EQUAL
2. APPROVED CATCH BASIN GRATES
   2.1. EAST JORDAN = 2440M
   2.2. NEENAH = R-3248
   2.3. OR APPROVED EQUAL
3. PROVIDE 24" SQUARE GRATE FOR CATCH BASINS ADJACENT TO CURB

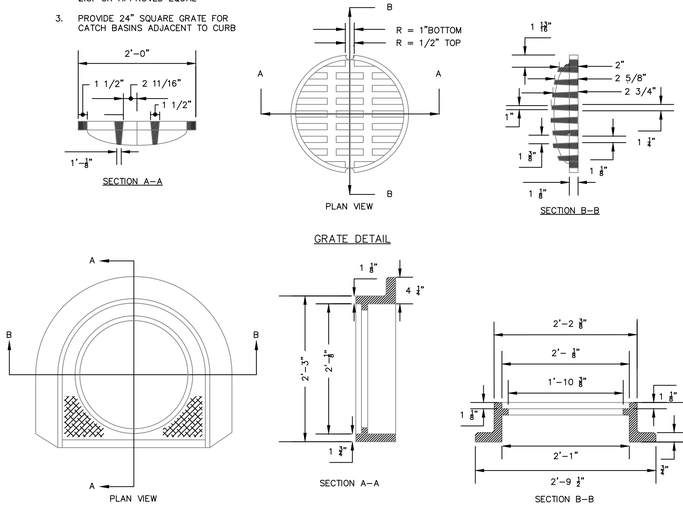

FRAME DETAIL

CATCH BASIN FRAME & GRATE
NOT TO SCALE

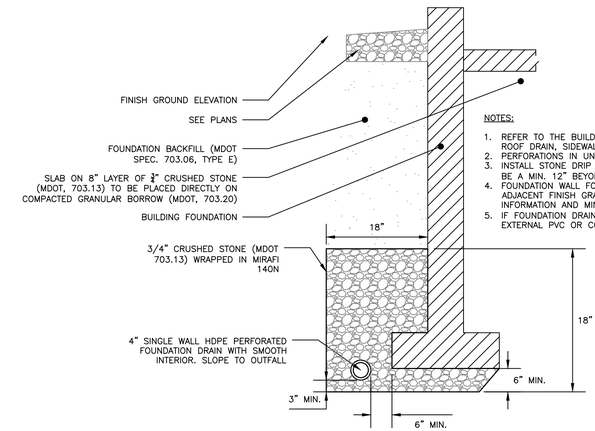

NOTES:

1. REFER TO THE BUILDING ARCHITECTS PLANS FOR THE BUILDING FOUNDATION, BACKFILL, ROOF DRAIN, SIDEWALK AND OTHER DETAILS.
2. PERFORATIONS IN UNDERDRAIN PIPE SHALL BE ORIENTED DOWN.
3. INSTALL STONE DRIP EDGE IN A LOCATIONS SUBJECT TO ROOF RUNOFF. WIDTH SHALL BE A MIN. 12" BEYOND THE PROJECTION OF THE ROOF EVE.
4. FOUNDATION WALL FOOTINGS SHALL BE CONSTRUCTED TO A MIN. DEPTH OF 4 FT BELOW ADJACENT FINISH GRADE. REFER TO STRUCTURAL ENGINEERS PLANS FOR ADDITIONAL INFORMATION AND MIN. REQUIREMENTS.
5. IF FOUNDATION DRAIN DAYLIGHTS, INSTALL DRAINAGE SOLUTIONS ANIMAL GUARD 4" EXTERNAL PVC OR CORRUGATED PLASTIC PIPE, OR INDUSTRY APPROVED EQUAL.

FOUNDATION DRAIN DETAIL
NOT TO SCALE

NOTES:

1. CONTRACTOR RESPONSIBLE FOR THE INSTALLATION OF THE ROOF DRAIN, ADAPTER AND COVER, GUTTERS, AND DOWNSPOUTS, UNLESS OTHERWISE DIRECTED.
2. ALL PIPES SHALL BE OF UNIFORM SIZE.

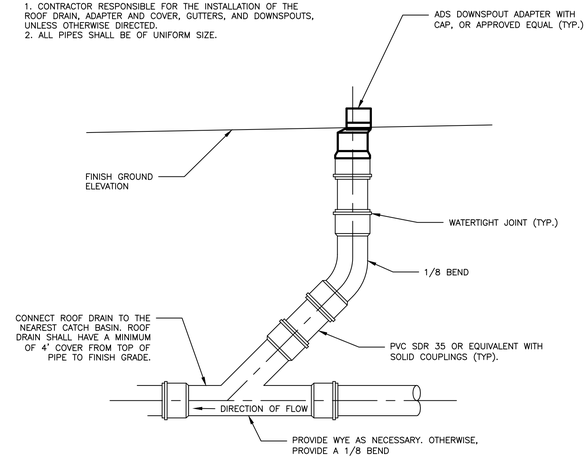

ROOF DRAIN DETAIL
NOT TO SCALE

NOTES:

1. INSTALL CATCH BASIN HOODS IN ALL CATCH BASINS WITH A 12" OR 15" OUTLET PIPE.
2. PREFERRED STYLE DESIGNED TO ELIMINATE CEMENTING OF THE TRAP.
3. REFER TO MANUFACTURER'S RECOMMENDATIONS FOR INSTALLATION REQUIREMENTS

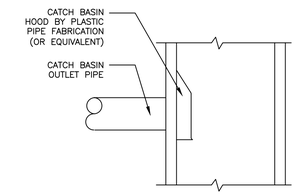

CATCH BASIN HOOD DETAIL
NOT TO SCALE

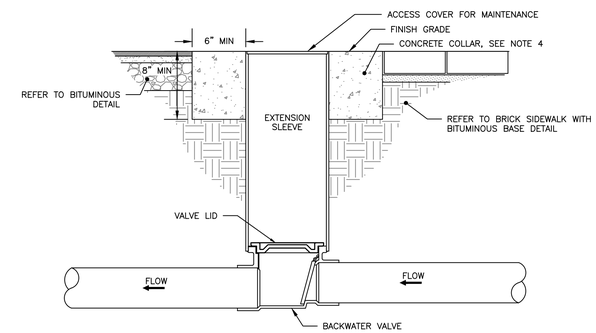

NOTES:

1. BACKFLOW VALVE TO BE PROVIDED BY AGRI DRAIN CORPORATION OR AN APPROVED EQUAL.
2. VALVE TO BE INSTALLED TO MANUFACTURER'S SPECIFICATIONS AND COMPLY WITH RULES AND REGULATIONS AS OUTLINED IN SECTION 2 OF THE CITY OF PORTLAND TECHNICAL MANUAL.
3. VALVE SHALL BE INSTALLED WITH A VALVE BOX AND COVER TO PROVIDE EASY ACCESS AND MAINTENANCE; VALVE COVER SHALL STATE 'SEWER' ON LID FLUSH TO SURFACE. REFER TO VALVE & BOX COVER DETAIL FOR ADDITIONAL INFORMATION.
4. CONCRETE COLLAR AT A MINIMUM 24-HOUR COMPRESSIVE STRENGTH OF 3,000 PSI.

BACKFLOW VALVE ASSEMBLY
NOT TO SCALE

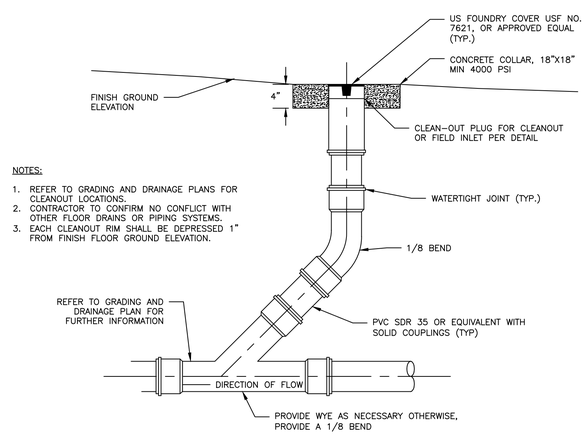

NOTES:

1. REFER TO GRADING AND DRAINAGE PLANS FOR CLEANOUT LOCATIONS.
2. CONTRACTOR TO CONFIRM NO CONFLICT WITH OTHER FLOOR DRAINS OR PIPING SYSTEMS.
3. EACH CLEANOUT RIM SHALL BE DEPRESSED 1" FROM FINISH FLOOR GROUND ELEVATION.

CONCRETE COLLAR FOR CLEANOUTS IN THE TRAVEL WAY
NOT TO SCALE

PERMIT LEVEL
NOT ISSUED FOR CONSTRUCTION

ISSUED FOR	BY / DATE
SRCC	PFH 1/28/2021
CITY REVIEW	PFH 2/3/2021

DRAWING NAME: DRAINAGE DETAILS

PROJECT NAME/ADDRESS: 1 GOOCH STREET REDEVELOPMENT

CLIENT/OWNER OF RECORD: TOM WATSON & CO. 188 STATE STREET, 3RD FLOOR, PORTLAND ME 04101

ACORN ENGINEERING, INC.

THIS PLAN SHALL NOT BE MODIFIED WITHOUT WRITTEN PERMISSION FROM ACORN ENGINEERING, INC. ANY MODIFICATIONS, WHETHER OR OTHERWISE, SHALL BE AT THE USER'S SOLE RISK AND REPONSIBILITY, ACORN ENGINEERING, INC.

ACORN ENGINEERING, INC.
2 CONGRESS STREET, LANE
PO BOX 3297, PORTLAND, ME 04101
(207) 775-2655

FILE:	1093.10_CIVIL
JN:	1093.10
SCALE:	AS NOTED
DESIGNED BY:	PFH
DRAWN BY:	ZMS
CHECKED BY:	WHS

STATE OF MAINE — PETER F. HEIL No. 15318 LICENSED — 2/3/21

DRAWING NO.
C-45

NOTES:

1. THE EROSION CONTROL MIX SHALL CONFORM TO THE FOLLOWING STANDARDS AND IN ACCORDANCE WITH THE MAINE DOT CHAPTER 700, SECTION 717.04(D):

1.1. pH BETWEEN 5.0 – 8.0
1.2. PARTICLE SIZE (BY WEIGHT):
1.2.1. 100% PASSING A 150 MM (6 IN) SCREEN
1.2.2. 75 TO 85% PASSING A 19 MM (0.75 IN) SCREEN
1.3. SOLUBLE SALTS CONTENT < 4.0 MMHOS/CM
1.4. ORGANIC MATTER 20 TO 100% , DRY WEIGHT BASIS

2. THE BERM SHOULD BE PLACED, UNCOMPACTED, ALONG A RELATIVELY LEVEL CONTOUR, WHEN NECESSARY THE BERM MAY BE PLACED PERPENDICULAR TO THE SLOPE ALONG THE PROPERTY LINE TO CONTAIN THE SEDIMENT PROVIDED A BERM IS LOCATED AT THE BASE OF THE SLOPE.

3. THE BERM MAY BE USED IN LIEU OF SILTATION FENCE, AT THE TOE OF SHALLOW SLOPES, ON FROZEN GROUND, LEDGE OUT CROPS, VERY ROOTED FORESTED AREA OR AT THE EDGE OF GRAVEL PARKING AREAS.

4. BERMS SHALL REMAIN IN PLACE UNTIL UPSTREAM AREA IS STABILIZED OR 90% CATCH OF VEGETATION IS ATTAINED. BERMS SHALL BE REMOVED OFFSITE OR BY SPREADING SUCH THAT NATIVE EARTH CAN BE SEEN BELOW.

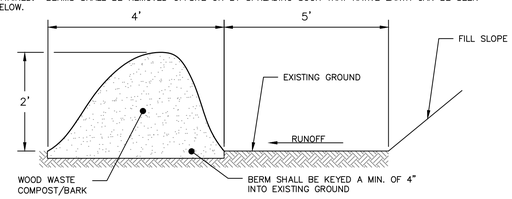

EROSION CONTROL MIX BERM DETAIL
NOT TO SCALE

NOTES:

1. FULL CONTACT WITH THE GROUND IS CRITICAL TO PREVENT SHORT CIRCUITING UNDER THE TUBE – THE GROUND SURFACE SHOULD BE SMOOTH AND LEVEL. IN WOODED AREAS, PROTRUDING ROOTS AND DEBRIS MAY NEED TO BE REMOVED. IN GRASSED AREAS, THE GRASS NEEDS TO BE EITHER MOWED OR COMPRESSED DOWN.
2. STAKING MAY BE NECESSARY ON STEEP SLOPES.
3. UPON FINAL STABILIZATION, THE TUBE CAN BE CUT OPEN AND THE MATERIAL SPREAD OUT ONTO THE GROUND. THE MESH MATERIAL SHOULD BE REMOVE.
4. LOOSE COMPOST MAY BE BACKFILLED ALONG THE UPSLOPE SIDE OF THE COMPOST FILTER SOCK, FILLING THE SEAM BETWEEN THE SOIL SURFACE AND THE DEVICE, IMPROVING FILTRATION AND SEDIMENT RETENTION.

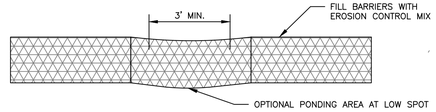

FRONT VIEW

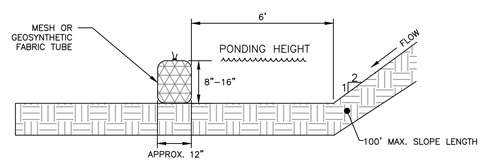

SIDE VIEW

FILTER SOCK DETAIL
NOT TO SCALE

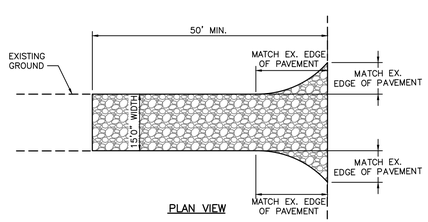

PLAN VIEW

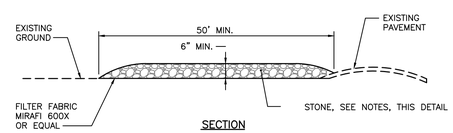

SECTION

NOTES:

1. CONTRACTOR SHALL ADD STONE TO ENTRANCE AS MUD/SILT MATERIAL ACCUMULATES
2. STONE SHALL BE 2"–3" COARSE AGGREGATE
3. CONSTRUCTION ENTRANCE SHALL BE GRADED TO NOT ALLOW ANY STORMWATER TO BE CONVEYED OFF SITE. IN SITUATIONS WHERE THIS IS NOT POSSIBLE, ANY STORMWATER CONVEYED OFFSITE SHALL BE TREATED OR RETAINED IN A MANNER APPROVED BY ENGINEER.
4. WHEN NECESSARY, ON–SITE VEHICLES SHALL HAVE THEIR WHEELS CLEANED PRIOR TO LEAVING SITE.
5. CONSTRUCTION ENTRANCE SHALL BE GRADED IN A MANNER THAT PREVENTS TRACKING OF SEDIMENTS ONTO PUBLIC RIGHT–OF–WAY

STABILIZED CONSTRUCTION ENTRANCE
NOT TO SCALE

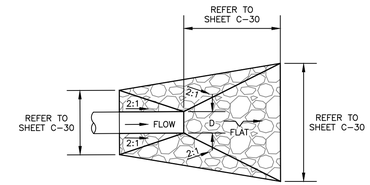

PLAN VIEW

NOTES:

1. RIPRAP SHALL BE DESCRIBED BY M.D.O.T. 703.26 EXCEPT SIZE SHALL BE AS SHOWN.
2. REFERENCE FOR ADDITIONAL INFORMATION: BEST MANAGEMENT PRACTICES FOR EROSION AND SEDIMENT CONTROL – CULVERT INLET/OUTLET PROTECTION.

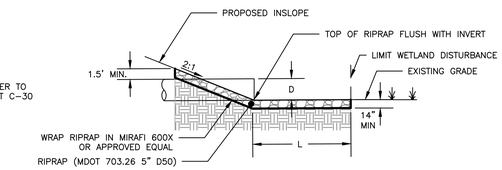

SECTION VIEW

RIPRAP OUTLET APRON DETAIL
NOT TO SCALE

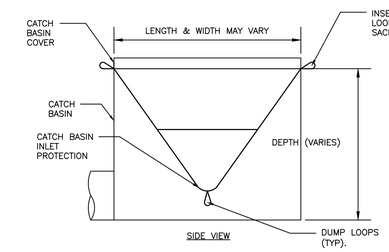

SIDE VIEW

NOTES:

1. CATCH BASIN INLET PROTECTION SHALL BE INSTALLED DOWNGRADIENT OF PROPOSED PROJECT AND ROUTINELY MAINTAINED IN ACCORDANCE WITH MANUFACTURER'S RECOMMENDATIONS
2. CATCH BASIN SIZE VARIES. CONTRACTOR TO ENSURE CATCH BASIN INLET PROTECTION MATCHES CATCH BASIN DIMENSIONS.
3. SILT SACK SHALL BE ACF ENVIRONMENTAL SILT SACK, TYPE A, OR APPROVED EQUAL.

CATCH BASIN INLET PROTECTION
NOT TO SCALE

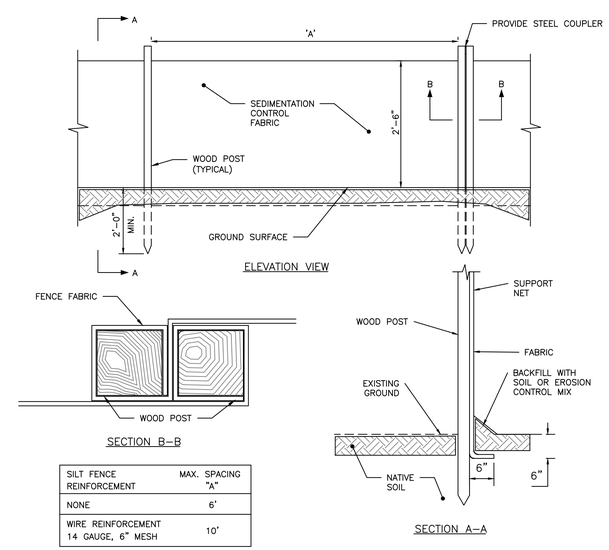

ELEVATION VIEW

SECTION B–B

SECTION A–A

SILT FENCE REINFORCEMENT	MAX. SPACING "A"
NONE	6'
WIRE REINFORCEMENT 14 GAUGE, 6" MESH	10'

SILTATION FENCE DETAIL
NOT TO SCALE

PERMIT LEVEL
NOT ISSUED FOR
CONSTRUCTION

ISSUED FOR	BY / DATE
SRCC	PFH 1/28/2021
CITY REVIEW	PFH 2/3/2021

DRAWING NAME: EROSION & SEDIMENTATION CONTROL DETAILS
PROJECT NAME/ ADDRESS: 1 GOOCH STREET REDEVELOPMENT
CLIENT/OWNER OF RECORD: TOM WATSON & CO. 188 STATE STREET, 3RD FLOOR, PORTLAND ME 04101

ACORN ENGINEERING, INC.

THIS PLAN SHALL NOT BE MODIFIED WITHOUT WRITTEN PERMISSION FROM ACORN ENGINEERING, INC. ANY MODIFICATIONS, WHETHER BY HAND OR OTHERWISE, SHALL BE AT THE USER'S SOLE RISK AND WITHOUT LIABILITY TO ACORN ENGINEERING, INC.

ACORN ENGINEERING, INC.
PO BOX 7322, PORTLAND, MAINE 04101
(207) 775–2655

FILE:	1093.10_CIVIL
JN:	1093.10
SCALE:	AS NOTED
DESIGNED BY:	PFH
DRAWN BY:	ZMS
CHECKED BY:	WHS

STATE OF MAINE — PETER F. HEIL — No. 15318 — LICENSED — 2/3/21

DRAWING NO.
C-46

1.0 EROSION CONTROL MEASURES AND SITE STABILIZATION

AS PART OF THE SITE DEVELOPMENT, THE FOLLOWING TEMPORARY AND PERMANENT EROSION AND SEDIMENTATION CONTROL DEVICES SHALL BE IMPLEMENTED. DEVICES SHALL BE INSTALLED AS DESCRIBED IN THIS REPORT OR WITHIN THE PLAN SET. SEE THE MAINE EROSION AND SEDIMENT CONTROL HANDBOOK FOR CONSTRUCTION: BEST MANAGEMENT PRACTICES FOR FURTHER REFERENCE.

1.1 TEMPORARY EROSION CONTROL MEASURES

THE FOLLOWING TEMPORARY EROSION AND SEDIMENTATION CONTROL MEASURES ARE PLANNED FOR THE PROJECT'S CONSTRUCTION PERIOD:

1.1.1 CRUSHED STONE STABILIZED CONSTRUCTION ENTRANCES SHALL BE PLACED AT ALL ACCESS POINTS TO THE PROJECT SITE WHERE THERE ARE DISTURBED AREAS. THE FOLLOWING SPECIFICATIONS SHALL BE FOLLOWED AT A MINIMUM:

- STONE SIZE SHALL BE 2–3 INCHES, OR RECLAIMED OR RECYCLED CONCRETE EQUIVALENT.
- THE THICKNESS OF THE ENTRANCE STONE LAYER SHALL BE NO LESS THAN 6 INCHES.
- THE ENTRANCE SHALL NOT BE LESS THAN 20 FEET WIDE, HOWEVER NOT LESS THAN THE FULL WIDTH OF POINTS WHERE INGRESS OR EGRESS OCCURS. THE LENGTH SHALL NOT BE LESS THAN 50 FEET IN LENGTH.
- GEOTEXTILE FABRIC (WOVEN OR NON–WOVEN) SHALL BE PLACED OVER THE ENTIRE ENTRANCE AREA.
- THE ENTRANCE/EXIT SHALL BE MAINTAINED TO THE EXTENT THAT IT WILL PREVENT THE TRACKING OF SEDIMENT ONTO PUBLIC ROAD WAYS.

1.1.2 SILTATION FENCE OR EROSION CONTROL BERM SHALL BE INSTALLED DOWN GRADIENT OF ANY DISTURBED AREAS TO TRAP RUNOFF BORNE SEDIMENTS UNTIL PERMANENT STABILIZATION IS ACHIEVED. THE SILT FENCE OR EROSION CONTROL BERM SHALL BE INSTALLED PER THE DETAILS PROVIDED IN THE PLAN SET AND INSPECTED BEFORE AND IMMEDIATELY AFTER EACH RAINFALL AND AT LEAST DAILY DURING PROLONGED RAINFALL. REPAIRS SHALL BE MADE IF THERE ARE ANY SIGNS OF EROSION OR SEDIMENTATION BELOW THE FENCE LINE OR BERM. IF THERE ARE SIGNS OF UNDERCUTTING AT THE CENTER OR THE EDGES, OR IMPOUNDING OF LARGE VOLUMES OF WATER BEHIND THE FENCE OR BERM, THE BARRIER SHALL BE REPLACED WITH A STONE CHECK DAM.

1.1.3 HAY MULCH INCLUDING HYDRO SEEDING IS INTENDED TO PROVIDE COVER FOR DENUDED OR SEEDED AREAS UNTIL REVEGETATION IS ESTABLISHED. MULCH PLACED BETWEEN APRIL 15TH AND NOVEMBER 1ST ON SLOPES OF LESS THAN 15 PERCENT SHALL BE COVERED BY FABRIC NETTING AND ANCHORED WITH STAPLES IN ACCORDANCE WITH THE MANUFACTURER'S RECOMMENDATION. MULCH PLACED BETWEEN NOVEMBER 1ST AND APRIL 15TH ON SLOPES EQUAL TO OR STEEPER THAN 8 PERCENT AND EQUAL TO OR FLATTER THAN 2:1 SHALL USE MATS OR FABRIC NETTING AND ANCHORED WITH STAPLES IN ACCORDANCE WITH THE MANUFACTURER'S RECOMMENDATION.

1.1.4 AT ANY TIME OF THE YEAR, ALL SLOPES STEEPER THAN 3:1 SHALL BE STABILIZED WITH DOUBLE NET EROSION CONTROL BLANKET BIONET SC150BN BY NORTH AMERICAN GREEN OR APPROVED EQUAL, OR EROSION CONTROL MIX SLOPE PROTECTION AS DETAILED WITHIN THE PLANS.

1.1.5 ELM STREET AND GOOCH STREET SHALL BE SWEPT TO CONTROL MUD AND DUST FROM THE CONSTRUCTION SITE AS NECESSARY. ADD ADDITIONAL STONE TO THE STABILIZED CONSTRUCTION ENTRANCE TO MINIMIZE THE TRACKING OF MATERIAL OFF THE SITE AND ONTO THE SURROUNDING ROADWAYS.

1.1.6 DURING DEMOLITION, CLEARING AND GRUBBING OPERATIONS, STONE CHECK DAMS SHALL BE INSTALLED AT ANY AREAS OF CONCENTRATED FLOW. THE MAXIMUM HEIGHT OF THE CHECK DAM SHALL NOT EXCEED 2 FEET. THE CENTER OF THE CHECK DAM SHALL BE 6 INCHES BELOW THE OUTER EDGES OF THE DAM. THE CONTRACTOR SHALL MULCH THE SIDE SLOPES AND INSTALL STONE CHECK DAMS FOR ALL NEWLY EXCAVATED DITCH LINES WITHIN 24 HOURS OF THEIR CREATION.

1.1.7 SILT FENCE STAKE SPACING SHALL NOT EXCEED 6 FEET UNLESS THE FENCE IS SUPPORTED WITH 14 GAUGE WIRE IN WHICH CASE THE MAXIMUM SPACING SHALL NOT EXCEED 10 FEET. THE SILT FENCE SHALL BE "TOED" INTO THE GROUND.

1.1.8 STORMDRAIN INLET PROTECTION SHALL BE PROVIDED TO STORMDRAINS THROUGH THE USE OF ANY OF THE FOLLOWING: HAY BALE DROP INLET STRUCTURES, SILT FENCE DROP INLET SEDIMENT FILTER, GRAVEL AND WIRE MESH DROP INLET SEDIMENT FILTER, OR CURB INLET SEDIMENT FILTER. BARRIERS SHALL BE INSPECTED AFTER EVERY RAINFALL EVENT AND REPAIRED AS NECESSARY. SEDIMENTS SHALL BE REMOVED WHEN ACCUMULATION HAS REACHED ½ THE DESIGN HEIGHT.

1.1.9 DUST CONTROL SHALL BE ACCOMPLISHED BY THE USE OF ANY OF THE FOLLOWING: WATER, CALCIUM CHLORIDE, STONE, OR AN APPROVED MDEP PRODUCT. DUST CONTROL SHALL BE APPLIED AS NEEDED TO ACCOMPLISH DUST CONTROL.

1.1.10 TEMPORARY LOAM, SEED, AND MULCHING SHALL BE USED IN AREAS WHERE NO OTHER EROSION CONTROL MEASURE IS USED. APPLICATION RATES FOR SEEDING ARE PROVIDED AT THE END OF THIS REPORT.

1.1.11 STOCKPILES SHALL BE STABILIZED WITHIN 7 DAYS OF FORMATION UNLESS A SCHEDULED RAIN EVENT OCCURS PRIOR TO THE 7 DAY WINDOW, IN WHICH CASE THE STOCKPILE SHALL BE STABILIZED PRIOR TO THE RAIN EVENT. METHODS OF STABILIZATION SHALL BE MULCH, EROSION CONTROL MIX, OR EROSION CONTROL BLANKETS/MATS. SILT FENCE OR A WOOD WASTE COMPOST FILTER BERM SHALL BE PLACED DOWNHILL OF ANY SOIL STOCKPILE LOCATION.

1.1.12 FOR DISTURBANCE BETWEEN NOVEMBER 1 AND APRIL 15, PLEASE REFER TO WINTER STABILIZATION PLAN IN THIS REPORT AND THE MAINE EROSION AND SEDIMENT CONTROL BMP MANUAL FOR FURTHER INFORMATION.

1.1.13 IT IS OF THE UTMOST IMPORTANCE THAT STORMWATER RUNOFF AND POTENTIAL SEDIMENT FROM THE CONSTRUCTION SITE BE DIVERTED AROUND THE PROPOSED UNDERDRAINS UNTIL THE TRENCH IS BACKFILLED.

1.2 PERMANENT EROSION CONTROL MEASURES

THE FOLLOWING PERMANENT EROSION CONTROL MEASURES ARE INTENDED FOR POST DISTURBANCE AREAS OF THE PROJECT.

1.2.1 ALL DISTURBED AREAS DURING CONSTRUCTION, NOT SUBJECT TO OTHER PROPOSED CONDITIONS, SHALL RECEIVE A MINIMUM 4" OF LOAM AND SHALL BE LIMED, AND MULCHED.
EROSION CONTROL BLANKETS OR MATS SHALL BE PLACED OVER THE MULCH IN AREAS NOTED IN PARAGRAPH 4.2 OF THIS REPORT.

1.2.2 ALL STORMWATER DEVICES SHALL BE INSTALLED AND TRIBUTARY AREAS STABILIZED PRIOR RECEIVING STORMWATER.

1.2.3 REFER TO THE MAINE EROSION AND SEDIMENT CONTROL BMP MANUAL FOR ADDITIONAL INFORMATION.

2.0 EROSION AND SEDIMENTATION CONTROL PLAN

2.1 THE EROSION AND SEDIMENTATION CONTROL PLAN IS INCLUDED WITHIN THE PLAN SET.

3.0 DETAILS AND SPECIFICATIONS

3.1 EROSION CONTROL DETAILS AND SPECIFICATIONS ARE INCLUDED IN THE PLAN SET.

4.0 STABILIZATION PLAN FOR WINTER CONSTRUCTION

WINTER CONSTRUCTION CONSISTS OF EARTHWORK DISTURBANCE BETWEEN THE DATES OF NOVEMBER 1 AND APRIL 15. IF A CONSTRUCTION SITE IS NOT STABILIZED WITH PAVEMENT, A ROAD GRAVEL BASE, 75% MATURE VEGETATION COVER OR RIPRAP BY NOVEMBER 15, THEN THE SITE SHALL BE PROTECTED WITH OVER–WINTER STABILIZATION. ANY AREA NOT STABILIZED WITH PAVEMENT, VEGETATION, MULCHING, EROSION CONTROL MIX, EROSION CONTROL MATS, RIPRAP, OR GRAVEL BASE ON A ROAD SHALL BE CONSIDERED OPEN.

THE CONTRACTOR SHALL LIMIT THE WORK AREA TO AREAS THAT WORK WILL OCCUR IN DURING THE SUBSEQUENT 15 DAYS AND SO THAT IT CAN BE MULCHED ONE DAY PRIOR TO A SNOW EVENT. THE CONTRACTOR SHALL STABILIZE WORK AREAS PRIOR TO OPENING ADDITIONAL WORK AREAS TO MINIMIZE AREAS WITHOUT EROSION CONTROL MEASURES.

THE FOLLOWING MEASURES SHALL BE IMPLEMENTED DURING WINTER CONSTRUCTION PERIODS:

4.1 SEDIMENT BARRIERS

DURING FROZEN CONDITIONS, SEDIMENT BARRIERS MAY CONSIST OF EROSION CONTROL MIX BERMS OR ANY OTHER RECOGNIZED SEDIMENT BARRIERS AS FROZEN SOIL PREVENTS THE PROPER INSTALLATION OF HAY BALES OR SILT FENCES.

4.2 MULCHING

ALL AREAS SHALL BE CONSIDERED TO BE DENUDED UNTIL SEEDED AND MULCHED. HAY AND STRAW MULCH SHALL BE APPLIED AT A RATE OF 150 LB. PER 1,000 SQUARE FEET OR 3 TONS/ACRE (TWICE THE NORMAL ACCEPTED RATE OF 75–LBS./1,000 S.F. OR 1.5 TONS/ACRE) AND SHALL BE PROPERLY ANCHORED. EROSION CONTROL MIX MUST BE APPLIED WITH A MINIMUM 4 INCH THICKNESS. MULCH SHALL NOT BE SPREAD ON TOP OF SNOW. THE SNOW SHALL BE REMOVED DOWN TO A ONE–INCH DEPTH OR LESS PRIOR TO APPLICATION. AFTER EACH DAY OF FINAL GRADING, THE AREA SHALL BE PROPERLY STABILIZED WITH ANCHORED HAY OR STRAW OR EROSION CONTROL MATTING. AN AREA SHALL BE CONSIDERED TO HAVE BEEN STABILIZED WHEN EXPOSED SURFACES HAVE BEEN EITHER MULCHED OR ADEQUATELY ANCHORED SO THAT GROUND SURFACE IS NOT VISIBLE THROUGH THE MULCH. BETWEEN THE DATES OF NOVEMBER 1 AND APRIL 15, ALL MULCH SHALL BE ANCHORED BY EITHER MULCH NETTING, TRACKING OR WOOD CELLULOSE FIBER. THE COVER WILL BE CONSIDERED SUFFICIENT WHEN THE GROUND SURFACE IS NOT VISIBLE THROUGH THE MULCH. AFTER NOVEMBER 1ST, MULCHING AND ANCHORING OF ALL EXPOSED SOIL SHALL OCCUR AT THE END OF EACH FINAL GRADING WORKDAY.

4.3 SOIL STOCKPILING

STOCKPILES OF SOIL OR SUBSOIL SHALL BE MULCHED FOR OVER WINTER PROTECTION WITH HAY OR STRAW AT TWICE THE NORMAL RATE OR WITH A FOUR–INCH LAYER OF EROSION CONTROL MIX. THIS SHALL BE DONE WITHIN 24 HOURS OF STOCKING AND RE–ESTABLISHED PRIOR TO ANY RAINFALL OR SNOWFALL.

4.4 SEEDING

BETWEEN THE DATES OF OCTOBER 15TH AND APRIL 1ST, LOAM OR SEED SHALL NOT BE REQUIRED. DURING PERIODS OF ABOVE FREEZING TEMPERATURES FINISHED AREAS SHALL BE FINE GRADED AND EITHER PROTECTED WITH MULCH OR TEMPORARILY SEEDED AND MULCHED UNTIL SUCH TIME AS THE FINAL TREATMENT CAN BE APPLIED. IF THE DATE IS AFTER NOVEMBER 1ST AND IF THE EXPOSED AREA HAS NOT BEEN LOAMED, FINAL GRADING WITH A UNIFORM SURFACE, THEN THE AREA MAY BE DORMANT SEEDED AT A RATE OF 3 TIMES HIGHER THAN SPECIFIED FOR PERMANENT SEED AND THEN MULCHED.

DORMANT SEEDING MAY BE PLACED PRIOR TO THE PLACEMENT OF MULCH OR EROSION CONTROL BLANKETS. IF DORMANT SEEDING IS USED FOR THE SITE, ALL DISTURBED AREAS SHALL RECEIVE 4" OF LOAM AND SEED AT AN APPLICATION RATE OF 5 LBS/1,000 S.F. ALL AREAS SEEDED DURING THE WINTER SHALL BE INSPECTED IN THE SPRING FOR ADEQUATE CATCH. ALL AREAS INSUFFICIENTLY VEGETATED (LESS THAN 75% CATCH) SHALL BE REVEGETATED BY REPLACING LOAM, SEED AND MULCH. IF DORMANT SEEDING IS NOT USED FOR THE SITE, ALL DISTURBED AREAS SHALL BE REVEGETATED IN THE SPRING.

4.5 OVER WINTER STABILIZATION OF DISTURBED SOILS

BY SEPTEMBER 15TH, ALL DISTURBED SOILS ON AREAS HAVING A SLOPE LESS THAN 15% SHALL BE SEEDED AND MULCHED. IF THE DISTURBED AREAS ARE NOT STABILIZED BY THIS DATE, THEN ONE OF THE FOLLOWING ACTIONS SHALL BE TAKEN TO STABILIZE THE SOIL FOR LATE FALL AND WINTER:

- STABILIZE THE SOIL WITH TEMPORARY VEGETATION – BY OCTOBER 1ST, SEED THE DISTURBED SOIL WITH WINTER RYE AT A SEEDING RATE OF 3LBS PER 1,000 S.F., LIGHTLY MULCH THE SEEDED SOIL WITH HAY OR STRAW AT 75 LBS PER 1,000 S.F., AND ANCHOR THE MULCH WITH PLASTIC NETTING. MONITOR GROWTH OF THE RYE OVER THE NEXT 30 DAYS. IF THE RYE FAILS TO GROW AT LEAST THREE INCHES OR FAILS TO COVER AT LEAST 75% OF THE DISTURBED SOIL BEFORE NOVEMBER 1ST, THEN MULCH THE AREA FOR OVER–WINTER PROTECTION.
- STABILIZE THE SOIL WITH SOD – STABILIZE THE DISTURBED SOIL WITH PROPERLY INSTALLED SOD BY OCTOBER 1ST. PROPER INSTALLATION INCLUDES PINNING THE SOD ONTO THE SOIL WITH WIRE PINS, ROLLING THE SOD TO GUARANTEE CONTACT BETWEEN THE SOD AND UNDERLYING SOIL, AND WATERING THE SOD TO PROMOTE ROOT GROWTH INTO THE DISTURBED SOIL.
- STABILIZE THE SOIL WITH MULCH – BY NOVEMBER 15TH, MULCH THE DISTURBED SOIL BY SPREADING HAY OR STRAW AT A RATE OF AT LEAST 150 LBS PER 1,000 S.F. ON THE AREA SO THAT NO SOIL IS VISIBLE THROUGH THE MULCH. IMMEDIATELY AFTER APPLYING THE MULCH, ANCHOR THE MULCH WITH PLASTIC NETTING TO PREVENT WIND FROM MOVING THE MULCH OFF THE DISTURBED SOIL.

4.6 OVER WINTER STABILIZATION OF DISTURBED SLOPES

ALL STONE–COVERED SLOPES SHALL BE CONSTRUCTED AND STABILIZED BY NOVEMBER 15TH. ALL SLOPES TO BE VEGETATED SHALL BE SEEDED AND MULCHED BY SEPTEMBER 1ST. A SLOPE IS CONSIDERED A GRADE GREATER THAN 15%. IF A SLOPE TO BE VEGETATED IS NOT STABILIZED BY SEPTEMBER 1ST, THEN ONE OF THE FOLLOWING ACTION SHALL BE TAKEN TO STABILIZE THE SLOPE FOR LATE FALL AND WINTER:

- STABILIZE THE SOIL WITH TEMPORARY VEGETATION AND EROSION CONTROL MATS – BY OCTOBER 1ST THE DISTURBED SLOPE SHALL BE SEEDED WITH WINTER RYE AT A SEEDING RATE OF 3 LBS PER 1,000 S.F. AND THEN INSTALL EROSION CONTROL MATS OR ANCHORED MULCH OVER THE SEEDING. IF THE RYE FAILS TO GROW AT LEAST THREE INCHES OR FAILS TO COVER AT LEAST 75% OF THE SLOPE BY NOVEMBER 1ST, THEN THE CONTRACTOR SHALL COVER THE SLOPE WITH A LAYER OF EROSION CONTROL MIX OR WITH STONE RIPRAP.
- STABILIZE THE SOIL WITH SOD – THE DISTURBED SLOPE SHALL BE STABILIZED WITH PROPERLY INSTALLED SOD BY OCTOBER 1ST. PROPER INSTALLATION INCLUDES THE CONTRACTOR PINNING THE SOD ONTO THE SLOPE WITH WIRE PINS, ROLLING THE SOD TO GUARANTEE CONTACT BETWEEN THE SOD AND UNDERLYING SOIL, AND WATERING THE SOD TO PROMOTE ROOT GROWTH INTO THE DISTURBED SOIL. THE CONTRACTOR SHALL NOT USE LATE–SEASON SOD INSTALLATION TO STABILIZE SLOPES HAVING A GRADE GREATER THAN 3H:1V OR HAVING GROUNDWATER SEEPS ON THE SLOPE FACE.
- STABILIZE THE SOIL WITH EROSION CONTROL MIX – EROSION CONTROL MIX SHALL BE PROPERLY INSTALLED BY NOVEMBER 15TH. THE CONTRACTOR SHALL NOT USE EROSION CONTROL MIX TO STABILIZE SLOPES HAVING GRADES GREATER THAN 2H:1V OR HAVING GROUNDWATER SEEPS ON THE SLOPE FACE.
- STABILIZE THE SOIL WITH STONE RIPRAP – PLACE A LAYER OF STONE RIPRAP ON THE SLOPE BY NOVEMBER 15TH. A REGISTERED PROFESSIONAL ENGINEER SHALL BE HIRED TO DETERMINE THE STONE SIZE NEEDED FOR STABILITY ON THE SLOPE AND TO DESIGN A FILTER LAYER FOR UNDERNEATH THE RIPRAP.

5.0 INSPECTION AND MAINTENANCE

A PERSON WITH KNOWLEDGE OF EROSION AND STORMWATER CONTROL, INCLUDING THE STANDARDS AND CONDITIONS IN THE PERMIT, SHALL CONDUCT PERIODIC VISUAL INSPECTIONS OF INSTALLED EROSION CONTROL MEASURES. THE FREQUENCY OF INSPECTION SHALL OCCUR AT LEAST ONCE EVERY TWO WEEKS, AS WELL AS AFTER A "STORM EVENT". A "STORM EVENT" SHALL CONSIST 0.5 INCHES OF RAIN WITHIN A 24 HOUR PERIOD. THE FOLLOWING EROSION AND SEDIMENT CONTROL – BEST MANAGEMENT PRACTICES (BMP'S) SHALL INSPECTED IN THE MANNER AS DESCRIBED.

5.1 SEDIMENT BARRIERS

HAY BALE BARRIERS, SILT FENCES AND FILTER BERMS SHALL BE INSPECTED AND REPAIRED FOR THE FOLLOWING IF THERE ARE ANY SIGNS OF EROSION OR SEDIMENTATION BELOW THEM. IF THERE ARE SIGNS OF UNDERCUTTING AT THE CENTER OR THE EDGES OF THE BARRIER, OR IMPOUNDING OF LARGE VOLUMES OF WATER BEHIND THEM, SEDIMENT BARRIERS SHALL BE REPLACED WITH A TEMPORARY CHECK DAM. SHOULD THE FABRIC ON A SILT FENCE OR FILTER BARRIER DECOMPOSE OR BECOME INEFFECTIVE PRIOR TO THE END OF THE EXPECTED USABLE LIFE AND THE BARRIER IS STILL NECESSARY, THE FABRIC SHALL BE REPLACED PROMPTLY. SEDIMENT DEPOSITS SHOULD BE REMOVED WHEN DEPOSITS REACH APPROXIMATELY ONE–HALF THE HEIGHT OF THE BARRIER. FILTER BERMS SHOULD BE RESHAPED AS NEEDED. ANY SEDIMENT DEPOSITS REMAINING IN PLACE AFTER THE SILT FENCE OR FILTER BARRIER IS NO LONGER REQUIRED SHOULD BE DRESSED TO CONFORM TO THE EXISTING GRADE, PREPARED AND SEEDED.

5.2 STABILIZED STONE CONSTRUCTION ENTRANCES

THE EXIT SHALL BE MAINTAINED IN A CONDITION THAT WILL PREVENT TRACKING OF SEDIMENT ONTO PUBLIC RIGHTS–OF–WAY. WHEN THE CONTROL PAD BECOMES INEFFECTIVE, THE STONE SHALL BE REMOVED ALONG WITH THE COLLECTED SOIL MATERIAL AND REDISTRIBUTED ON SITE IN A STABLE MANNER. THE ENTRANCE SHOULD THEN BE RECONSTRUCTED. THE CONTRACTOR SHALL SWEEP OR WASH PAVEMENT AT EXITS, WHICH HAVE EXPERIENCED MUD–TRACKING ON TO THE PAVEMENT OR TRAVELED WAY. WHEN WASHING IS REQUIRED, IT SHALL BE DONE ON AN AREA STABILIZED WITH AGGREGATE, WHICH DRAINS INTO AN APPROVED SEDIMENT TRAPPING DEVICE. ALL SEDIMENT SHALL BE PREVENTED FROM ENTERING STORM DRAINS, DITCHES, OR WATERWAYS.

5.3 MULCHED AREAS

ALL MULCHES MUST BE INSPECTED PERIODICALLY, IN PARTICULAR AFTER RAINSTORMS, TO CHECK FOR RILL EROSION. IF LESS THAN 90% OF THE SOIL SURFACE IS COVERED BY MULCH, ADDITIONAL MULCH SHALL BE IMMEDIATELY APPLIED. NETS MUST BE INSPECTED AFTER RAIN EVENTS FOR DISLOCATION OR FAILURE. IF WASHOUTS OR BREAKAGE OCCUR, RE–INSTALL THE NETS AS NECESSARY AFTER REPAIRING DAMAGE TO THE SLOPE. WHERE MULCH IS USED IN CONJUNCTION WITH ORNAMENTAL PLANTINGS, INSPECT PERIODICALLY THROUGHOUT THE YEAR TO DETERMINE IF MULCH IS MAINTAINING COVERAGE OF THE SOIL SURFACE. REPAIR AS NEEDED.

5.4 DUST CONTROL

WHEN TEMPORARY DUST CONTROL MEASURES ARE USED, REPETITIVE TREATMENT SHALL BE APPLIED AS NEEDED TO ACCOMPLISH CONTROL.

5.5 STORMWATER APPURTENANCES

ALL UNDERDRAINS, STORM DRAINS, AND CATCH BASINS NEED TO BE OPERATING EFFECTIVELY AND FREE OF DEBRIS.

5.6 EROSION AND SEDIMENTATION CONTROL INSPECTIONS:

ACORN ENGINEERING HAS PERSONNEL QUALIFIED TO CONDUCT EROSION AND SEDIMENTATION CONTROL INSPECTIONS. FOR FURTHER INFORMATION CONTACT:

CONTACT: WILL SAVAGE, PE
TELEPHONE: (207) 775–2655

QUALIFICATIONS:

- MAINE PROFESSIONAL ENGINEERING LICENSE #11419
- MAINE DEP – CERTIFIED IN MAINTENANCE & INSPECTION OF STORMWATER BMP'S CERT #14
- CERTIFIED EROSION, SEDIMENT AND STORM WATER INSPECTOR (CESSWI) CERT #0293
- CERTIFIED PROFESSIONAL IN EROSION AND SEDIMENT CONTROL (CPESC) CERT. #4620

THE CONTRACTOR HAS SOLE RESPONSIBILITY FOR COMPLYING WITH THE EROSION AND SEDIMENTATION REPORT/PLAN, INCLUDING CONTROL OF FUGITIVE DUST. THE CONTRACTOR SHALL BE RESPONSIBLE FOR ANY MONETARY PENALTIES RESULTING FROM FAILURE TO COMPLY WITH THESE STANDARDS.

6.0 IMPLEMENTATION SCHEDULE

THE FOLLOWING IMPLEMENTATION SEQUENCE IS INTENDED TO MAXIMIZE THE EFFECTIVENESS OF THE ABOVE DESCRIBED EROSION CONTROL MEASURES. CONTRACTORS SHOULD AVOID OVEREXPOSING DISTURBED AREAS AND LIMIT THE AMOUNT OF STABILIZATION AREA.

1. INSTALL A STABILIZED CONSTRUCTION ENTRANCE IN ALL LOCATIONS WHERE CONSTRUCTION TRAFFIC WILL ENTER AND EXIT THE SITE.
2. INSTALL PERIMETER SILT FENCE OR EROSION CONTROL BERM.
3. INSTALL ALL OTHER EROSION CONTROL DEVICES AS NECESSARY THROUGHOUT THE REMAINDER OF THIS SCHEDULE.
4. COMMENCE INSTALLATION OF DRAINAGE INFRASTRUCTURE.
5. PRIORITIZE THE DOWNHILL SIDE TO CONTAIN RUNOFF WITHIN THE SITE WHILE PROVIDING AN ENGINEERED OUTLET WITH SILTATION BARRIER TO THE MUNICIPAL STORMWATER SYSTEM.
6. COMMENCE EARTHWORK OPERATIONS, WALL AND FOUNDATION INSTALLATION.
7. COMMENCE INSTALLATION OF UTILITIES.
8. CONTINUE EARTHWORK AND GRADING TO SUBGRADE AS NECESSARY FOR CONSTRUCTION.
9. COMPLETE INSTALLATION OF DRAINAGE INFRASTRUCTURE, AS WELL AS OTHER UTILITY WORK.
10. COMPLETE REMAINING EARTHWORK OPERATIONS.
11. INSTALL SUB–BASE AND BASE GRAVELS IN PAVED AREAS.
12. INSTALL PAVING, CURBING AND BRICKWORK.
13. LOAM, LIME, FERTILIZE, SEED AND MULCH DISTURBED AREAS AND COMPLETE ALL LANDSCAPING.
14. ONCE THE SITE IS STABILIZED, 90% CATCH OF GRASS HAS BEEN OBTAINED, OR MULCHING OF LANDSCAPE AREAS IS COMPLETE REMOVE ALL TEMPORARY EROSION CONTROL MEASURES.
15. TOUCH UP AREAS WITHOUT A VIGOROUS CATCH OF GRASS WITH LOAM AND SEED.
16. COMPLETE SITE SIGNAGE AND STRIPING.
17. EXECUTE PROPER MAINTENANCE OF ALL TEMPORARY AND PERMANENT EROSION CONTROL MEASURES THROUGHOUT THE PROJECT.

THE ABOVE IMPLEMENTATION SEQUENCE SHOULD BE GENERALLY FOLLOWED BY THE SITE CONTRACTOR. HOWEVER, THE CONTRACTOR MAY CONSTRUCT SEVERAL ITEMS SIMULTANEOUSLY. THE CONTRACTOR SHALL SUBMIT TO THE OWNER A SCHEDULE OF THE COMPLETION OF THE WORK. IF THE CONTRACTOR IS TO COMMENCE THE CONSTRUCTION OF MORE THAN ONE ITEM ABOVE, THEY SHALL LIMIT THE AMOUNT OF EXPOSED AREAS TO THOSE AREAS IN WHICH WORK IS EXPECTED TO BE UNDERTAKEN DURING THE FOLLOWING 30 DAYS.

THE CONTRACTOR SHALL RE–VEGETATE DISTURBED AREAS AS RAPIDLY AS POSSIBLE. ALL AREAS SHALL BE PERMANENTLY STABILIZED WITHIN 7 DAYS OF FINAL GRADING OR BEFORE A STORM EVENT. THE CONTRACTOR SHALL INCORPORATE PLANNED INLETS AND DRAINAGE SYSTEMS AS EARLY AS POSSIBLE INTO THE CONSTRUCTION PHASE.

7.0 SEEDING PLAN

7.1 SITE PREPARATION

THE SEEDED AREAS SHALL BE FEASIBLY GRADED OUT TO PROVIDE THE USE OF EQUIPMENT FOR SEEDBED PREPARATION, SEEDING, MULCH APPLICATION, AND MULCH ANCHORING. IF NECESSARY, THE SITE MAY REQUIRE ADDITIONAL TEMPORARY EROSION CONTROL MEASURES OUTLINED IN THE EROSION CONTROL REPORT.

7.2 SEEDBED PREPARATION

FERTILIZER SHALL BE APPLIED TO THE SITE AT A RATE OF 13.8 POUNDS PER 1,000 SQUARE FEET. THE COMPOSITION OF THE FERTILIZER SHALL BE 10–10–10 (N–P2O5–K2O) OR EQUIVALENT.

LIMESTONE SHALL BE APPLIED TO THE SITE AT A RATE OF 138 POUNDS PER 1,000 SQUARE FEET.

7.3 SEEDING

THE COMPOSITION AND AMOUNT OF TEMPORARY SEED APPLIED TO A SITE SHALL BE DETERMINED BY THE FOLLOWING TABLE:

TEMPORARY SEED APPLICATION RATES

SEED	LBS / ACRE	RECOMMENDED SEEDING DATES
WINTER RYE	2.57	8/15 TO 10/1
OATS	1.84	4/1 TO 7/1 8/15 TO 9/15
ANNUAL RYGRASS	0.92	4/1 TO 7/1
SUDANGRASS	0.92	5/15 TO 8/15
PERENNIAL	0.92	8/15 TO 9/15
TOTAL	7.17 LBS/ACRE	

PERMANENT SEED APPLICATION RATES

SEED	LBS / ACRE
KENTUCKY BLUEGRASS	20.00
CREEPING RED FESCUE	20.00
PERENNIAL RYEGRASS	4.80
TOTAL	44.8 LBS/ACRE

7.4 MULCHING

MULCH SHALL BE HARDWOOD AND APPLIED AT A RATE OF 70 LBS – 90 LBS PER 1,000 SQUARE FEET. THE MULCH SHALL BE INSTALLED AT A MINIMUM DEPTH OF 4 INCHES. THE SEEDED AREA SHALL BE MULCHED IMMEDIATELY AFTER SEED IS APPLIED. MULCHING DURING THE WINTER SEASON SHALL BE DOUBLE THE NORMAL AMOUNT. REFER TO DETAIL FOR MORE INFORMATION.

8.0 CONCLUSION

THE ABOVE EROSION CONTROL NARRATIVE IS INTENDED TO MINIMIZE THE DEVELOPMENT IMPACT BY IMPLEMENTING TEMPORARY AND PERMANENT EROSION CONTROL MEASURES. THE CONTRACTOR SHALL ALSO REFER TO THE MAINE EROSION AND SEDIMENT CONTROL BMP MANUAL FOR ADDITIONAL INFORMATION.

PERMIT LEVEL
NOT ISSUED FOR
CONSTRUCTION

ISSUED FOR	BY / DATE
SRCC	PFH 1/28/2021
CITY REVIEW	PFH 2/3/2021

DRAWING NAME: EROSION & SEDIMENTATION CONTROL NOTES

PROJECT NAME/ADDRESS: 1 GOOCH STREET REDEVELOPMENT

CLIENT/OWNER OF RECORD: TOM WATSON & CO.
188 STATE STREET, 3RD FLOOR, PORTLAND ME 04101

ACORN ENGINEERING, INC.
ACORN ENGINEERING, INC.
PO BOX 3372, PORTLAND MAINE 04101
(207) 775–2655

THIS PLAN SHALL NOT BE MODIFIED WITHOUT WRITTEN PERMISSION FROM ACORN ENGINEERING, INC. ANY ALTERATIONS, AUTHORIZED OR OTHERWISE, SHALL BE AT THE USER'S SOLE RISK AND WITHOUT LIABILITY TO ACORN ENGINEERING, INC.

FILE: 1093.10_CIVIL
JN: 1093.10
SCALE: AS NOTED
DESIGNED BY: PFH
DRAWN BY: ZMS
CHECKED BY: WHS

STATE OF MAINE
PETER F. HEIL
No. 15318
LICENSED
PROFESSIONAL ENGINEER
2/3/21

DRAWING NO.

C-47

Section 1: Right Title Interest

Please see attached for a copy of the Quitclaim Deeds for the rights of the applicant to the property as recorded at the York County Registry of Deeds, Book: 18498, Page 581 & 578 and the Joint Development Agreement with the City of Biddeford.

NANCY E HAMMOND, REGISTER OF DEEDS
E-RECORDED **Bk 18498 PG 578**
Instr # 2020066617
12/23/2020 10:19:43 AM
Pages 3 YORK CO

Maine R.E. Transfer Tax Paid

DLN: 1002040126137

QUITCLAIM DEED WITH COVENANT

KNOW ALL PERSONS BY THESE PRESENTS, that, **FIFTY NINE ELM STREET LLC**, a Maine limited liability company with a principal place of business and mailing address of 380 Warren Avenue, Portland, Maine 04103, for consideration paid, grants to **RIVER LOT LLC**, a Maine limited liability company with a mailing address of c/o Port Property Management, 82 Hanover Street, Suite 5, Portland, Maine 04101 (the "Grantee"), with QUITCLAIM COVENANT, the land and improvements in the City of Biddeford, County of York and State of Maine, bounded and described as follows:

A certain lot, or parcel of land, located southeasterly of Elm Street, in the City of Biddeford, County of York, State of Maine, being bound and described as follows:

Beginning at a #5 rebar w/cap stamped "NCS 2080" at the southerly corner of land now or formerly (N/F) of State of Maine, as described in Book 3627, Page 185 and Book 2569, Page 015;

THENCE: N 50°34'00" E, along said State of Maine, 110.88', to a proposed #5 rebar w/cap stamped "NCS 2080" to be set on the southwesterly line of land N/F of FPL Energy Maine Hydro LLC;

THENCE: S 78°52'00" E, along said FPL Energy Maine Hydro LLC, 174.32', to a to a proposed #5 rebar w/cap stamped "NCS 2080" to be set;

THENCE: S 68°12'00" E, along said FPL Energy Maine Hydro LLC, 51.79', to a proposed #5 rebar w/cap stamped "NCS 2080" to be set;

THENCE: S 57°05'00" E, along said FPL Energy Maine Hydro LLC, 83.80', to a #5 rebar w/cap stamped "NCS 2080" at the northerly corner of land N/F of Precision Screw Machine Products, Inc., as described in Book 15535, Page 402;

THENCE: S 17°58'00" W, along said Precision Screw Machine Products, Inc., 135.84', to a proposed #5 rebar w/cap stamped "NCS 2080" to be set on the northeasterly line of Saco-Lowell LLC Parcel, as shown on plan entitled "Lot Split Plan, 59 Elm Street, Biddeford, Maine", by Northeast Civil Solutions, Inc., dated December 15, 2020, NCS Project No. 42267;

THENCE: N 69°42'00" W, along said Saco-Lowell LLC Parcel, 247.06', to a proposed #5 rebar w/cap stamped "NCS 2080" to be set;

THENCE: N 54°50'00" W, along said Saco-Lowell LLC Parcel, 124.15', to the POINT of BEGINNING.

The above described parcel contains 1.08 acres, more or less.

The bearings for the above described parcel are based on Magnetic North 1929.

TOGETHER WITH all rights, benefits, privileges and easements and SUBJECT TO same covenants and obligations to the extent the same are in force and effect, as contained in a deed from Biddeford & Saco Dev. Corp. to Grafton Lumber Co., Inc. dated April 6, 1962 and recorded in the York County Registry of Deeds in Book 1484, Page 121.

TOGETHER WITH, and subject to the rights of others in and to, a right of way from the easterly sideline of the said above described lot to Elm Street, said right of way to be adjoining said lot on the southerly side and to be thirty (30) feet wide along said lot and known or formerly known as Gooch Street, for all purposes of an easement, including ingress to and egress from the property of the Grantee, and for the laying, relaying, maintenance, repair, and improvement of utility lines, pipes, wires and other conduits, and all appurtenances necessary thereto.

Being a portion of the premises conveyed to Fifty Nine Elm Street LLC by Quitclaim Deed from Pioneer Capital Corporation, dated June 24, 2009, and recorded in the York County Registry of Deeds in Book 15667, Page 590.

IN WITNESS WHEREOF, Fifty Nine Elm Street LLC has caused this instrument to be signed and sealed in its company name by Nicholas J. Morrill, its Authorized Attorney, thereunto duly authorized this 22nd day of December, 2020.

FIFTY NINE ELM STREET LLC,
a Maine limited liability company

Witness

By:_____
Nicholas J. Morrill
Title: Authorized Attorney

STATE OF MAINE
COUNTY OF CUMBERLAND, ss. December 22, 2020

Then personally appeared before me the above named Nicholas J. Morrill, Authorized Attorney of Fifty Nine Elm Street LLC, and acknowledged the foregoing instrument to be his free act and deed in his said capacity, and the free act and deed of Fifty Nine Elm Street LLC.

Notary Public/~~Attorney at Law~~
Name:
Commission Expiration:

DEBRA J. LAUSIER
Notary Public, Maine
My Commission Expires: January 12, 2024

NANCY E HAMMOND, REGISTER OF DEEDS
E-RECORDED **Bk 18498 PG 581**
Instr # 2020066618
12/23/2020 10:19:43 AM
Pages 3 YORK CO

Maine R.E. Transfer Tax Paid

DLN: 1002040126141

QUITCLAIM DEED WITH COVENANT

KNOW ALL PERSONS BY THESE PRESENTS, that, **FIFTY NINE ELM STREET LLC**, a Maine limited liability company with a principal place of business and mailing address of 380 Warren Avenue, Portland, Maine 04103 (the "Grantor"), for consideration paid, grants to **SACO-LOWELL LLC**, a Maine limited liability company with a mailing address of c/o Port Property Management, 82 Hanover Street, Suite 5, Portland, Maine 04101, with QUITCLAIM COVENANT, the land and improvements in the City of Biddeford, County of York and State of Maine, bounded and described as follows:

A certain lot, or parcel of land, located on the southerly side of Elm Street, in the City of Biddeford, County of York, State of Maine, being bound and described as follows:

Beginning on the southerly side of Elm Street, at a #5 rebar w/cap stamped "NCS 2080", at the intersection of the southerly side of Elm Street and the easterly side of land now or formerly (N/F) Inhabitants of the City of Biddeford (being a portion of land formally known as Smith Street), as described in Book 1934, Page 603;

THENCE: N 55°17'00" E, along said Elm Street, 36.93', to a point;

THENCE: following a curve to the right, along said Elm Street, having a radius of 1446.48', an arc length of 83.53', a chord bearing of N 56°56'16" E, and a chord distance of 83.52', to a #5 rebar w/cap stamped "NCS 2080";

THENCE: S 54°50'00" E, along land N/F State of Maine, as described in Book 3627, Page 185 and Book 2569, Page 015, 69.55', to a #5 rebar w/cap stamped "NCS 2080" at the westerly corner of River Lot LLC Parcel, as shown on plan entitled "Lot Split Plan; 59 Elm Street, Biddeford, Maine", by Northeast Civil Solutions, Inc., dated December 15, 2020, NCS Project No. 42267;

THENCE: continuing S 54°50'00" E, along said River Lot LLC Parcel, 124.15', to a proposed #5 rebar w/cap stamped "NCS 2080" to be set;

THENCE: S 69°42'00" E, along said River Lot LLC Parcel, 247.06', to the westerly corner of land N/F Precision Screw Machine Products, Inc., as described in Book 15535, Page 402;

THENCE: continuing S 69°42'00" E, along said Precision Screw Machine Products, Inc., 288.15', to a p/k nail found;

THENCE: S 34°48'30" W, along land N/F City of Biddeford Maine, as described in Book 16838, Page 255, and Book 16475, Page 186, 39.96', to a #5 rebar w/cap stamped "NCS 2080";

THENCE: S 01°29'50" E, along said City of Biddeford Maine, 90.60', to a point;

THENCE: N 72°25'20" W, along land N/F Boston and Maine Railroad, 695.22', to a #5 rebar w/cap stamped "NCS 2080";

THENCE: N 28°16'00" W, along said Inhabitants of the City of Biddeford, 163.58', to the POINT of BEGINNING.

The above described parcel contains 2.56 acres, more or less.

The bearings for the above described parcel are based on Magnetic North 1929.

TOGETHER WITH any and all interest the Grantor may have in a right of way to be used in common by Biddeford & Saco Dev. Corp. and their successors, assigns, lessors and guests over and along Smith Street, so-called, from its intersection with said Elm Street southeasterly to its intersection with southeasterly side of Yard Drive, so-called, as said Smith Street is presently laid out and customarily used together with a right of way over said Yard Drive from its intersection with said Smith Street easterly along southerly line of the within conveyed premises to the Saco River, said Yard Drive occupying the entire width between southerly face of buildings on conveyed premises and northerly face of Buildings on premises of Biddeford & Saco Dev. Corp. wherever the northerly face of said Buildings lie within twenty (20) feet of southerly face of said conveyed property and continues a width of twenty (20) feet to land of Central Maine Power Co. on or near the bank of said Saco River.

TOGETHER WITH all rights, benefits, privileges and easements and SUBJECT TO same covenants and obligations to the extent the same are in force and effect, as contained in a deed from Biddeford & Saco Dev. Corp. to Grafton Lumber Co., Inc. dated April 6, 1962 and recorded in the York County Registry of Deeds in Book 1484, Page 121.

TOGETHER WITH the right to place a building or other structures up to and along the westerly boundary of the premises described in a deed from Storage Realty Corp. to Maine Energy Recovery Company dated August 13, 1985 and recorded in the York County Registry of Deeds in Book 3611, Page 161, which westerly boundary extends from land now or formerly of Boston & Maine Railroad to Gooch Street, so-called; and Maine Energy Recovery Company, its successors and assigns, further agree to support any request by Storage Realty Corp., its successors and assigns, for a variance or exception from the City of Biddeford, should any be necessary for the placement of any building or structure

(otherwise conforming with zoning requirements of the City of Biddeford) along said property line.

Being a portion of the premises conveyed to Fifty Nine Elm Street LLC by Quitclaim Deed from Pioneer Capital Corporation, dated June 24, 2009, and recorded in the York County Registry of Deeds in Book 15667, Page 590.

IN WITNESS WHEREOF, Fifty Nine Elm Street LLC has caused this instrument to be signed and sealed in its company name by Nicholas J. Morrill, its Authorized Attorney, thereunto duly authorized this 22nd day of December, 2020.

Witness

FIFTY NINE ELM STREET LLC,
a Maine limited liability company

By:_____
Nicholas J. Morrill
Title: Authorized Attorney

STATE OF MAINE
COUNTY OF CUMBERLAND, ss.

December 22, 2020

Then personally appeared before me the above named Nicholas J. Morrill, Authorized Attorney of Fifty Nine Elm Street LLC, and acknowledged the foregoing instrument to be his free act and deed in his said capacity, and the free act and deed of Fifty Nine Elm Street LLC.

Notary Public/~~Attorney at Law~~
Name:
Commission Expiration:

DEBRA J. LAUSIER
Notary Public, Maine
My Commission Expires: January 12, 2024

JOINT DEVELOPMENT AGREEMENT

This Joint Development Agreement ("Agreement"), dated December 21, 2020 is executed by and among **SACO-LOWELL LLC**, a Maine limited liability company ("Saco-Lowell"), **RIVER LOT LLC**, a Maine limited liability company ("River Lot") and the **CITY OF BIDDEFORD, MAINE** (the "City") (each a "Party" and, collectively, the "Parties").

RECITALS

WHEREAS, Saco-Lowell and River Lot shall be referred to collectively in this Agreement as the "Developer"; and

WHEREAS, contemporaneously herewith the Developer entered into a Credit Enhancement Agreement with the City dated as of _____, 2020 (the "Credit Enhancement Agreement"); and

WHEREAS, Saco-Lowell seeks to re-develop the so-called Saco-Lowell building (the "Saco-Lowell Building") which is owned by Saco-Lowell and located at 59 Elm Street in Biddeford; and

WHEREAS, River Lot owns the parcel adjacent to the property upon which the Saco-Lowell Building is located; and

WHEREAS, the property owned by Saco-Lowell and the property owned by River Lot LLC shall be referred to collectively in this Agreement as the "Property"; and

WHEREAS, the City seeks to expand its so-called Riverwalk pedestrian trail network (the "Riverwalk") and provide access to the Riverwalk through a portion of the Property; and

WHEREAS, the Developer and the City desire to enter into various easements and other agreements for the re-development of the Saco-Lowell Building, the Property and the Riverwalk.

NOW, THEREFORE, in consideration of the promises and mutual agreements contained herein and other consideration, the receipt and sufficiency of which is hereby acknowledged, and intending to be legally bound hereby, the Parties agree as follows:

ARTICLE I
COMMITMENTS

1. Developer's Permanent Easement Commitments

The Developer agrees to grant the following permanent pedestrian easement to the City in connection with the City's completion of certain improvements to the Riverwalk (the "Riverwalk Easement"):

(a) An easement, for use by the public, of that certain area depicted in red and identified as the "City Easement Area" on the concept plan attached hereto as Exhibit A; and

(b) Any commercially reasonably necessary temporary construction easements to allow the City to complete the Riverwalk Easement.

The exact location and dimensions of the Riverwalk Easement shall be mutually agreed upon by the Developer and the City and the Riverwalk Easement shall contain the following terms and conditions:

(i) That the City, at its sole cost and expense, shall construct all improvements in a good and workmanlike manner and shall be responsible for the construction and maintenance of all pedestrian connections associated with the Riverwalk Easement, including, but not limited to, all costs and expenses related to the design, permitting, survey work and signage costs; and

(ii) That the City at all times keep such improvements and the easement areas of the Riverwalk Easement in good repair, consistent with municipal practice to the extent such areas are open to the public during the winter months and that the City further agree to develop a plan for timely winter maintenance of all such easement areas open to the public during the winter months.

By execution of this Agreement, the City Manager hereby represents that the City Council has authorized the City Manager to accept, on behalf of the City, the Riverwalk Easement on the terms and conditions set forth above.

2. Additional Developer Commitments

In addition to the foregoing, the Developer agrees to construct a pedestrian pathway on the Property that will connect with the Riverwalk, which pathway will extend from Elm Street to the existing railroad underpass located adjacent to the Property, with the exact location of such pathway to be determined by the Developer, in its reasonable discretion, but subject to the City's consent, which consent shall not be unreasonably withheld or delayed. The Developer further agrees to continue to work with the City to meet other mutual development goals for the construction of improvements around the Saco-Lowell Building, including the completion of housing and commercial development within the City's so-called "Mill District" area. In connection with the foregoing, the Developer agrees to work with the City to convey, or have its affiliate convey, that certain ten foot (10') right of way known as "Yard Drive" located on Pearl Street which conveyance, however, would be subject to: (i) the Developer and/or its affiliates retaining rights to travel over said "Yard Drive," as determined by the Developer in its sole but reasonable discretion (said retained rights shall not include the right to park on Yard Drive); and (ii) the Developer and/or its affiliates reaching an agreement with the City in which the City will make parking available at market rates on City property located at the end of Gooch Street near the existing railroad underpass for future development projects on Gooch Street. The Parties recognize and agree that the City intends to accept a public way integrating said Yard Drive into the public way. Upon the City's acceptance of said public way, the Developer agrees that its private easement rights over said Yard Drive shall terminate.

The Developer also agrees to reserve to the City: (a) the right, at the City's cost and expense and at no cost and expense to the Developer, to connect its newly constructed Pearl Street parking garage to the parking area adjacent to the Saco-Lowell Building by means of a pedestrian passageway over the existing railroad tracks; and (b) the right, at the City's cost and expense and at no cost and expense to the Developer, to construct a facility that will supplement the City's future parking garage transportation hub (the "City's Reserved Improvement Rights"), provided, however, that it is hereby agreed and acknowledged that the location, grade and height of such improvements shall be determined by the Developer subject to the City's consent which consent shall not be unreasonably withheld or delayed and, in all cases, the City shall be responsible for all costs and expenses of the completion of such proposed improvements and such improvements shall not obstruct any parking areas located on the Property, nor shall such improvements otherwise interfere with the Developer's ongoing operations at the Property. Upon the City's notice to the Developer of its intention to exercise the City's Reserved Improvement Rights, the Developer and the City shall execute a separate easement agreement to memorialize the agreed upon size, dimensions and location of the improvements to be constructed by the City (the "City's Reserved Easement"). The City's Reserved Easement shall, at a minimum, contain the following terms and conditions:

(1) That the City, at its cost and expense and at no cost and expense to the Developer, shall construct all improvements in a good and workmanlike manner and shall be responsible for the construction and maintenance of all pedestrian connections associated with the City's Reserved Easement, including, but not limited to, all costs and expenses related to the design, permitting, survey work and signage costs;

(2) That the City, at all times, shall keep such improvements and the easement areas of the City's Reserved Easement in good repair, consistent with municipal practice to the extent such areas are open to the public during the winter months and that the City further agree to develop a plan for timely winter maintenance of all such easement areas open to the public during the winter months;

(3) That the City, at its sole cost and expense, shall be responsible for providing and implementing any and all other commercially reasonable safety and general maintenance plans and protocols required or requested by the Developer or its investment partners, lenders or insurance advisors in connection with the City's Reserved Easement; and

(5) That the City shall be obligated to complete construction of the improvements described in the City's Reserved Improvement Rights on or before the earlier of (i) the date of expiration of the Credit Enhancement Agreement; or (ii) the date on which the construction is completed on the installation of a footbridge from Biddeford Pearl Park to the Saco Amtrak station.

3. City Commitments

The City hereby agrees to contemporaneously execute the Credit Enhancement Agreement, which provides for a twenty (20) year term based on the following reimbursement schedule, and such other terms as are more particularly described in the Credit Enhancement Agreement:

(a) Years 1-5: 85% reimbursement to the Developer; 15% to the City;

(b) Years 6-10: 75% reimbursement to the Developer; 25% to the City; and

(c) Years 11-20: 50% reimbursement to the Developer; 50% to the City.

While the City shall contemporaneously execute the Credit Enhancement Agreement, the City's obligations thereunder are conditioned upon Saco-Lowell and/or its affiliates agreeing to file applications for a site plan approval for the re-development of the Saco-Lowell Building and the adjacent property located at 20 and 30 Gooch Street (the "Gooch Street Property") within three (3) years from the date of execution of this Agreement or the Credit Enhancement Agreement, whichever is earlier. In addition, Saco-Lowell and/or its affiliates agree to complete construction of the re-development of the Saco-Lowell Building and the Gooch Street Property within two (2) years of receiving final City approval for each of the Saco-Lowell Building and Gooch Street

Property re-development projects. In the event that Saco-Lowell and/or its affiliates fail to comply with the above-obligations, the Credit Enhancement Agreement shall terminate and the City shall have no further obligations thereunder, it being the intent hereof, however, that so long as Saco-Lowell and/or its affiliate file applications for a site plan approval for the re-development of each of the Saco-Lowell Building and the Gooch Street Property within said three (3) year period and complete the proposed re-development projects within two (2) years of receiving final City approval for each such project, then Saco-Lowell and/or its affiliates shall be deemed to have satisfied its obligations under this paragraph and the City shall have no right to terminate the Credit Enhancement Agreement pursuant to the terms and conditions of this paragraph. For the avoidance of doubt, Saco-Lowell, River Lot and/or their affiliates agree to not request a credit enhancement agreement for the re-development of the Gooch Street Property.

ARTICLE II
INDEMNIFICATIONS

The City agrees to indemnify, defend and hold the Developer harmless from any claims, damages, costs, liabilities and expenses (including attorney's fees) arising from the City and/or the public's use of the Riverwalk Easement or the City's Reserved Easement. Each Party shall indemnify, defend, and hold the other Party harmless from any claims, damages, costs, liabilities and expenses (including reasonable attorney's fees) arising from the gross negligence, misrepresentation, fraud, fault or misconduct of the indemnifying Party or any of its agents, servants, officers, directors, employees and affiliates.

ARTICLE III
LIMIT OF LIABILITY

Notwithstanding any other provision of this Agreement, in no event shall the Parties or any of their affiliates, by reason of any of their respective acts or omissions relating to this Agreement be liable whether in contract, tort, misrepresentation, warranty, negligence, strict liability, or otherwise for any special, indirect, or consequential damages arising out of or in connection with this Agreement, or the performance, non-performance or breach thereof.

ARTICLE IV
MISCELLANEOUS

1. Representations and Warranties

Each Party represents and warrants to the other that:

(a) It is duly qualified to do business and is in good standing in the State of Maine; and

(b) It has full power and authority to execute, deliver and perform its obligations under this Agreement; and

(c) The execution, delivery and performance of this Agreement has been duly and validly authorized by all necessary action by such Party; and

(d) The execution and delivery of this Agreement by such Party and the performance of the terms, covenants and conditions contained herein will not violate the articles of incorporation or by-laws of such Party, or any order of a court or arbitrator, and will not conflict with and will not constitute a material breach of, or default under, the provisions of any material contract by which either Party is bound.

2. Right to Require Performance

The failure of any Party at any time to require performance by the other Party of any provisions hereof shall in no way affect the right of such Party thereafter to enforce the same. Nor shall waiver by either Party of any breach of any provisions hereof be taken or held to be a waiver of any succeeding breach of such provisions or as a waiver of any provision itself.

3. Governing Law

This Agreement is and shall constitute a contract under and is to be construed in accordance with the laws of the State of Maine. Any dispute resulting in legal action and not resolved by arbitration, mediation, or such other method as may be mutually agreed to by the Parties shall be adjudicated within the jurisdiction of the State of Maine.

4. Relationship of Parties

(a) This Agreement is not intended to supersede the authority granted by law to any regulatory board or agency of the City. Therefore, nothing in this Agreement shall be construed or implied to require the City's planning, zoning or other regulatory boards or agencies (however designated) to approve the plans for any aspect of the actions required under this Agreement;

(b) The Parties acknowledge that the obligations set further herein may be further described in other agreements and or deeds as agreed to by the Parties. The City, and the Developer agree to cooperate in good faith with regard to each

and every aspect required for the completion of all obligations contemplated by this Agreement; and

(c) This Agreement shall not be interpreted or construed to independently create an association, joint venture, or partnership between the Parties or to impose any partnership obligation or liability upon either Party. Neither Party shall have any right, power or authority to enter into any agreement or undertaking for, or act on behalf of, or to act as or be an agent of representative of, or to otherwise bind, the other Party.

5. Breach by Developer

(a) The City shall provide notice to the Developer of a breach in writing, identifying in detail the nature of the alleged breach and a requested remedy for the same. A breach shall be cured if remedied within thirty (30) days of receipt of such notice, or such other time as mutually agreed upon by the Parties.

(b) If a breach is not cured as set forth above, the City may bring an action, in law or in equity, to enforce this Agreement or for damages, or both.

(c) If a breach is not cured as set forth above, the City by action of the City Council at a regularly scheduled City Council meeting may terminate the Credit Enhancement Agreement and the City shall have no further obligations under the Credit Enhancement Agreement.

6. Breach by City

(a) The Developer shall provide notice to the City of a breach in writing, identifying the nature of the alleged breach and requested remedy. A breach shall be cured if remedied within thirty (30) days of receipt of the notice, or such other time as mutually agreed.

(b) If a breach is not cured as set forth above, the Developer may bring an action, in law or in equity, to enforce this Agreement or for damages, or both.

7. Integration

This Agreement, along with any exhibits, appendices, addenda, schedules, and amendments hereto, encompasses the entire agreement of the Parties, and supersedes all previous understandings and agreements between the Parties,

whether oral or written regarding the matters addressed in this Agreement. The Parties hereby acknowledge and represent, by affixing their hands and seals hereto, that the Parties have not relied on any representation, assertion, guarantee, warranty, collateral contract or other assurance, except those set out in this Agreement, made by or on behalf of any other Party or any other person or entity whatsoever, prior to the execution of this Agreement. The Parties hereby waive all rights and remedies, at law or in equity, arising or which may arise as the result of a Party's reliance on such representation, assertion, guarantee, warranty, collateral contract or other assurance, provided that nothing herein contained shall be construed as a restriction or limitation of the Party's right to remedies associated with the gross negligence, willful misconduct or fraud of any person or party taking place prior to, or contemporaneously with, the execution of this Agreement.

8. No Oral Modifications; Assignment

This Agreement may not be changed or terminated orally. This Agreement and all the covenants, terms and provisions contained herein shall be binding upon and inure to the benefit of the Parties hereto and their respective successors and assigns. This Agreement and any of the rights, interests or obligations under this Agreement may not be assigned or delegated by any Party, without the prior written consent of the other Party, provided, however, that it is hereby agreed and acknowledged that the Developer shall have the right to assign this Agreement to an affiliate or related entity of the Developer, without having to obtain the prior written consent of the City for such assignment. This Agreement is not intended to confer any rights or benefits to any entity other than to the City and the Developer, and their affiliates and/or assignees.

9. Notice

All notices required to be given to City or the Developer under this Agreement shall be in writing and deemed given upon the earlier of actual receipt by personal delivery or two (2) days after being mailed by U.S. Express, registered or certified mail, return receipt requested, or a reputable overnight courier as follows:

City: City of Biddeford
c/o James A. Bennett, (or the then current) City Manager
P.O. Box 586
205 Main Street
Biddeford, Maine 04005

With a copy to: Keith R. Jacques, Esq.
Woodman Edmands Danylik Austin Smith & Jacques, P.A.
234 Main Street
P.O. Box 468
Biddeford, ME 04005

The Developer: c/o Port Property Management, Inc.
82 Hanover Street, Suite 5
Portland, ME 04101

With a copy to: Hawley R. Strait, Esq.
Bernstein Shur
100 Middle Street
P.O. Box 9729
Portland, ME 04104

10. Severability

Any provision or part of the Agreement held to be void or unenforceable under any law or regulation shall be deemed stricken, and all remaining provisions shall continue to be valid and binding upon the Parties, who agree that the Agreement shall be reformed to replace such stricken provisions or part thereof with a valid and enforceable provision that comes as close as possible to expressing the intention of the stricken provisions.

11. Survival

All express representations, warranties, indemnifications or limitations of liability made in or given in this Agreement shall survive the expiration or the termination of this Agreement for any reason.

12. Mediation/Arbitration

The Parties hereto agree that prior to filing litigation they will consider alternative dispute resolution techniques such as mediation and arbitration to resolve all claims, counterclaims, disputes and other matters in question between the Parties arising out of this Agreement.

13. Consents

The Developer shall use commercially reasonable efforts to obtain all necessary consents of its mortgage holders and other lien holders to this Agreement and the easements contemplated herein.

IN WITNESS WHEREOF, Saco-Lowell, River Lot and the City have set their hands and seals as of the day, month and year first above written.

SACO-LOWELL LLC
By: Tom Watson & Co., LLC, its Manager

Witness

By: _____
Name: John Laliberte
Title: Vice President

RIVER LOT LLC
By: Tom Watson & Co., LLC, its Manager

Witness

By: _____
Name: John Laliberte
Title: Vice President

CITY OF BIDDEFORD

Witness

By: _____
Name: James A. Bennett
Title: City Manager

Exhibit A

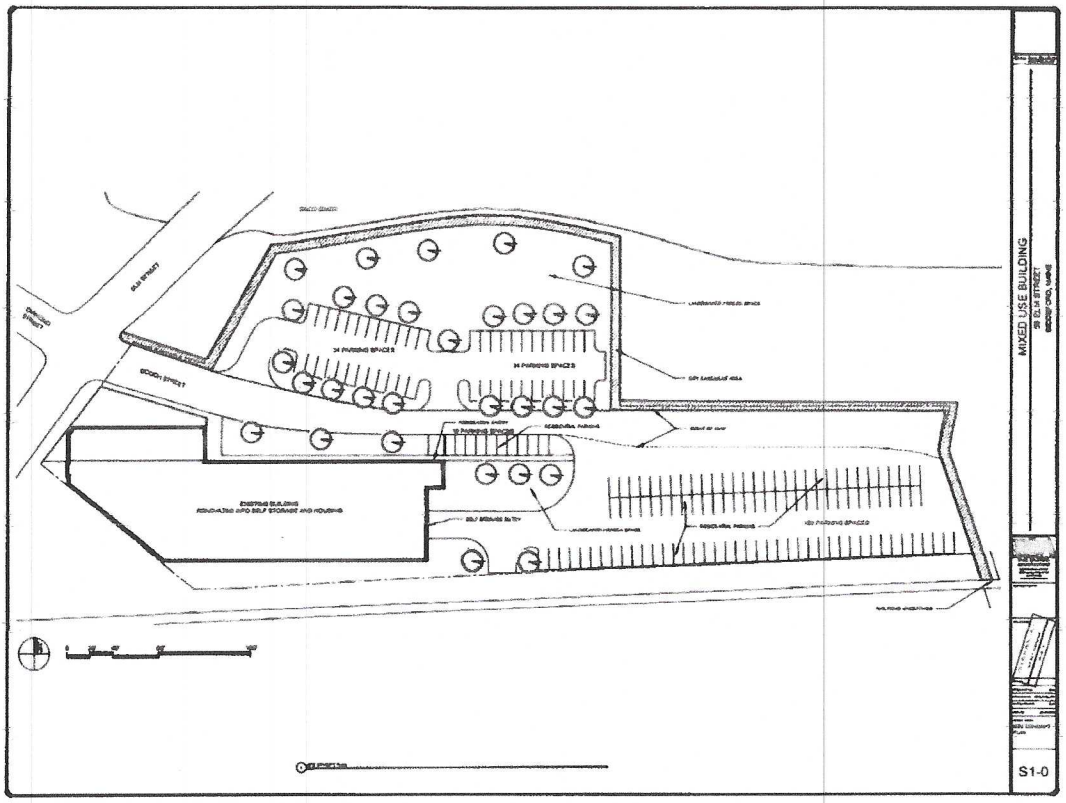

Section 2: Declaration of Easements, Covenants, and Restrictions

The project does not propose any covenants or restrictions at this time. Please refer the attached plans for the existing easements across the property.

1. ALTA Survey field dated 10/19/2020 and last revised 11/20/2020, prepared by Northeast Civil Solutions.
2. Lot Split Plan field dated 10/19/2020 prepared by Northeast Civil Solutions.

As Gooch Street will remain a private ROW, new easements to the respective utility companies are proposed for maintenance and access, including:

1. Access and utility easement from Saco-Lowell LLC to Central Maine Power Company for access and maintenance of proposed pad mounted transformers, subsurface electric structures, and associated electric utility conduits.
2. Access and utility easement from Saco-Lowell LLC to Maine Water for access and maintenance of proposed hydrants and associated subsurface water lines.
3. Access and utility easement from Saco-Lowell LLC to the City of Biddeford for access and maintenance of proposed sanitary and stormwater sewer structures and associated subsurface collection lines.
4. Access easement from Saco-Lowell LLC to the City of Biddeford over the proposed sidewalk for access along Gooch Street.
5. Access and utility easement from Saco-Lowell LLC to Unitil Corporation for access and maintenance of proposed natural gas services and associated infrastructure.
6. Access and maintenance easement from the City of Biddeford to Saco-Lowell LLC for the access and maintenance of the existing building along the City owned parcel formerly Smith Street.

Section 3: Financial and Technical Capacity

Financial Capacity

Please refer to the attached letter from the Applicant's bank confirming financial capacity for the project.

Technical Capacity

Tom Watson & Co., a Bush Watson affiliate, has a long and successful history of redeveloping properties. Its success is due to its horizontal structure. Since its founding, the company has woven together the acquisition and development team, the property management group and the construction group on every project. All have an active seat at the table during the feasibility stage, due diligence period, closing and program implementations phase. We have successfully redeveloped smaller units throughout Portland and South Portland and have begun larger projects such as Riverdam Mills in Biddeford, 82 Hanover Street Building in Portland and The Linden (formerly Bayside Village) in Portland.

MICHAEL BARTON, *CONGRESS GROUP OF MAINE*
The Congress Group of Maine provides customized services for client including pre-development, feasibility, design team selection, cost estimation, contractor selection, project administration, and post development support. Taking advantage of intimate knowledge of the Greater Portland and surrounding real estate and construction happenings. The Congress Group of Maine looks to provide property owners and real estate developers with streamlined services for facility procurement, development and/or construction oversight.

TRAVERSE FOURNIER, MAINE STREET CAPITAL
Traverse has worked for over 15 years as a real estate lending adviser serving clients with their financing needs. Having originated and closed over $1 Billion in financing throughout the country within portfolio and capital market executions, Traverse's experiences bring an intelligent and honest view to lending.

JOSEPH PORTA, Porta & Co.
Joe is the founder of Porta & Co. Commercial Real Estate Services. Prior to starting Porta & Co., Joe had 12-years of experience in the industry spending the majority of his career with CBRE | The Boulos Company in Portland, Maine. At CBRE he became their youngest partner and was twice named the top producer of the year. Joe has achieved the prestigious SIOR-designation by the Society of Industrial and Office Realtors, recognizing the highest tiered production and exemplar of professionalism in the market trade area. In addition to Joe's brokerage activity, he has a decade of experience developing and repositioning assets in downtown Portland.

Acorn Engineering specializes in providing urban redevelopment, civil/site design, environmental services, municipal consulting, and construction administration. Together, Acorn Engineering, Inc. and Ryan Senatore Architecture have successfully designed and permitted more than 20 level II/III projects in Portland during the past 5 years, including four for Redfern Properties: Munjoy Heights, East Bayside Lofts, The Hiawatha, and 70 Anderson.

Ryan Senatore Architecture has designed several important multifamily residential projects in Southern and Central Maine, including the nine-story, 139-unit, concrete and steel framed high-rise apartment building known as the Hiawatha (for Redfern Properties). RSA's residential clients include private developers as well as public housing authorities, and completed projects include both new construction and adaptive reuse of existing historic structures.

Section 4: STORMWATER MANAGEMENT REPORT

Prepared For:

Tom Watson & Co
Portland, ME 04101

Prepared By:

Acorn Engineering, Inc.
65 Hanover Street
Portland, Maine 04101

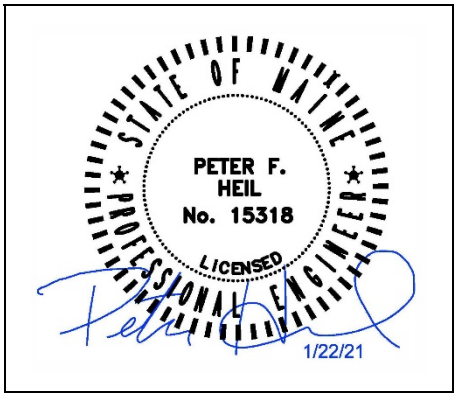

January 2021

INTRODUCTION

Acorn Engineering, Inc. has been retained by Tom Watson & Co. to provide civil engineering services for the proposed redevelopment of 1 Gooch Street. The proposed project includes redevelopment an existing abandoned building into 320 self-storage units and 96 residential dwelling units, as well as improvements/maintenance to Gooch Street, repurposing parking areas and utility upgrades. A small one-story addition (29' x 6') is proposed for a new entry into the building along Gooch Street.

PROPOSED DEVELOPMENT

As part of the Gooch Street maintenance improvements, significant existing pavement area will be removed along the building frontage with grassed and landscaping proposed to be installed, reducing the total impervious coverage on the lot. Gooch Street will be restriped and shimmed with pavement where necessary to generally maintain the historical drainage patterns and ADA access into the building. Utility improvements with Gooch Street include installation of new catch basins to redirect approximately 300 lf roadway surface runoff into the municipal storm drain network within Elm Street. The eastern portion of Gooch Street and the proposed parking lot improvements include installation of new catch basins and a storm drain network that will tie into an existing catch basin that ultimately discharges into the Saco River. Gooch Street is proposed to be constructed to formalize the travel lanes, where existing conditions is a large impervious surface, with no delineation of travel lanes or parking areas. Stormwater and Erosion Control Best Management Practices will be implemented during construction.

SOILS

Onsite soil information includes the following:

- Soil Conservation Service Medium Intensity Soil Survey for York County

The area within and surrounding the project includes soils types listed in the table below. The susceptibility of soils to erosion is indicated on a relative "K" scale of values over a range of 0.02 to 0.69. Higher "K" values indicate more erodible soils.

Table 1 - "K" Value		
Soils Type	**Subsurface**	**Substratum**
Urban Land (Ur)	0.27	0.27

The soil "K" values for the soils, listed above, show a low to moderate susceptibility to erosion. The site's susceptibility to erosion is from the Soil Conservation Service Medium Intensity Soil Survey for Cumberland County. Although soil "K" values for the soils show a low susceptibility to erosion, implementation of the proposed Erosion & Sedimentation Measures by the contractor will be of the utmost importance, given the proximity to the Saco River.

Please refer to Section 5. for the erosion and sedimentation control narrative.

Conclusion

With the proposed site and road improvements, the project will reduce overall impervious coverage and improve drainage throughout the site. The project does not anticipate creating erosion, drainage, or runoff problems for the development, the City, or abutting properties. Please let me know if you have any questions or comments.

Section 5: EROSION & SEDIMENTATION CONTROL REPORT

Prepared For:

Tom Watson & Co.
Portland, ME 04101

Prepared By:

Acorn Engineering, Inc.
65 Hanover Street
Portland, Maine 04101

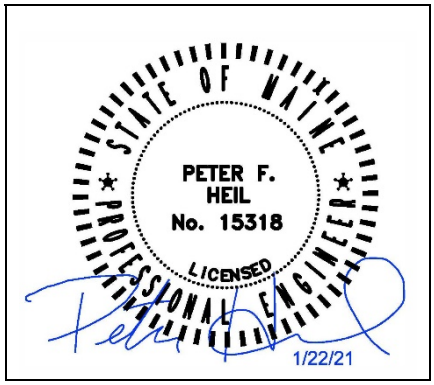

January 2021

INTRODUCTION

Acorn Engineering, Inc. has been retained by Tom Watson & Co. to provide civil engineering services for the proposed redevelopment of 1 Gooch Street. The proposed project includes redevelopment an existing abandoned building into 320 self-storage units and 96 residential dwelling units, as well as improvements/maintenance to Gooch Street, repurposing parking areas and utility upgrades. A small one-story addition (29' x 6') is proposed for a new entry into the building along Gooch Street.

The following Erosion and Sedimentation Control Report was developed in accordance with the City of Biddeford Land Development Regulations, Article VI: Performance Standards, Section 26: Erosion Control and the Maine DEP Chapter 500 Stormwater Management Appendix A and B (1), Amended August 12, 2015. This narrative also meets the standards required in the Maine DEP's Erosion & Sediment Control BMP's Manual, revised in 2016.

1.0 EXISTING CONDITIONS

The proposed project site is located at the corner of Elm Street and Gooch Street adjacent to the Saco River. An ALTA / NSPS Land Title Survey has been prepared by Own Haskell Inc. Falmouth; Maine dated December 18, 2020.

Abutting Uses:

- North N/A Saco River
- East MSRD3 Commercial
- South MSRD3 Railroad / Parking Garage
- West MSRD3 Commercial

The site has an existing 5-story structure located in the southwest corner of the lot. Gooch Street is a private ROW providing access to the eastern properties towards the river. The site is mostly impervious area currently being utilized as parking lots and foundation remnants of previously demolished structures. The existing grades on site are relatively flat.

1.1 Existing Soils

Onsite soil information includes the following:

- Soil Conservation Service Medium Intensity Soil Survey for York County

The area within and surrounding the project includes soil types listed in the table below. The susceptibility of soils to erosion is indicated on a relative "K" scale of values over a range of 0.02 to 0.69. Higher "K" values indicate more erodible soils.

Table 1 - "K" Value		
Soils Type	**Subsurface**	**Substratum**
Urban Land (Ur)	0.27	0.27

The soil "K" values for the soils, listed above, show a low to moderate susceptibility to erosion. The site's susceptibility to erosion is from the Soil Conservation Service Medium Intensity Soil Survey for Cumberland County. Although soil "K" values for the soils show a low susceptibility to erosion, implementation of the proposed Erosion & Sedimentation Measures by the contractor will be of the utmost importance given the proximity of the site to the Saco River.

1.2 Existing Erosion Problems

There are no signs of erosion.

1.3 Critical Areas

Portions of the site are mapped within the A8 Flood Zone per FEMA FIRM mapping, dated 5/15/84.

1.4 Protected Natural Resource

The site is located near the Saco River, which is a Protected Natural Resource. The project proposes improvements to the existing 12" storm drain outfall to address erosion & sedimentation control as stormwater runoff discharges onto the bank and into the river. The project is not located within a watershed classified as an Urban Impaired Stream by the Maine DEP.

1.5 Previous Construction Activity (5 years)

Acorn is unaware of any construction activity in the last 5 years.

1.6 Timber Harvesting

Acorn Engineering, Inc. is not aware of any timber harvesting within the past five years.

2.0 EROSION CONTROL MEASURES AND SITE STABILIZATION

As part of the site development, the following temporary and permanent erosion and sedimentation control devices shall be implemented. Devices shall be installed as described in this report or within the plan set. See the Maine Erosion and Sediment Control Handbook for Construction: Best Management Practices for further reference.

2.1 Temporary Erosion Control Measures

The following temporary erosion and sedimentation control measures are planned for the project's construction period:

2.1.1 Crushed stone stabilized construction entrances shall be placed at all access points to the project site where there are disturbed areas. The following specifications shall be followed at a minimum:

- Stone size shall be 2-3 inches or reclaimed or recycled concrete equivalent.
- The thickness of the entrance stone layer shall be no less than 6 inches.
- The entrance shall not be less than 20 feet wide, however not less than the full width of points where ingress or egress occurs. The length shall not be less than 50 feet in length.
- Geotextile fabric (woven or non-woven) shall be placed over the entire entrance area.
- The entrance/exit shall be maintained to the extent that it will prevent the tracking of sediment onto public roadways.

2.1.2 Erosion control berm mix with hay bale reinforcement shall be installed down gradient of any disturbed areas to trap runoff borne sediments until permanent stabilization is achieved. The silt fence or erosion control berm shall be installed per the details provided in the plan set and inspected before and immediately after each rainfall and at least daily during prolonged rainfall. Repairs shall be made if there are any signs of erosion or sedimentation below the fence line or berm. If there are signs of undercutting at the center or the edges or impounding of large volumes of water behind the fence or berm, the barrier shall be replaced with a stone check dam.

2.1.3 Hay mulch including hydro seeding is intended to provide cover for denuded or seeded areas until revegetation is established. Mulch placed between April 15th and November 1st on slopes of less than 15 percent shall be covered by fabric netting and anchored with staples in accordance with the manufacturer's recommendation. Mulch placed between November 1st and April 15th on slopes equal to or steeper than 8 percent and equal to or flatter than 2:1 shall use mats or fabric netting and anchored with staples in accordance with the manufacturer's recommendation.

2.1.4 At any time of the year, all slopes greater than 3:1 shall be stabilized with Double Net Erosion Control Blanket Bionet SC150BN by North American Green or Approved Equal, or Erosion Control Mix Slope Protection as detailed within the plans.

2.1.5 Elm Street and Gooch Street shall be swept to control mud and dust from the construction site as necessary. Add additional stone to the stabilized construction entrance to minimize the tracking of material off the site and onto the surrounding roadways.

2.1.6 During demolition, clearing and grubbing operations, stone check dams shall be installed at any areas of concentrated flow. The maximum height of the check dam shall not exceed 2 feet. The center of the check dam shall be 6

inches below the outer edges of the dam. The contractor shall mulch the side slopes and install stone check dams for all newly excavated ditch lines within 24 hours of their creation.

2.1.7 Silt fence stake spacing shall not exceed 6 feet unless the fence is supported with 14-gauge wire in which case the maximum spacing shall not exceed 10 feet. The silt fence shall be "toed" into the ground.

2.1.8 Storm drain inlet protection shall be provided to storm drains using any of the following: hay bale drop inlet structures, silt fence drop inlet sediment filter, gravel and wire mesh drop inlet sediment filter, or curb inlet sediment filter. Barriers shall be inspected after every rainfall event and repaired as necessary. Sediments shall be removed when accumulation has reached ½ the design height.

2.1.9 Dust control shall be accomplished using any of the following: water, calcium chloride, stone, or an approved MDEP product. Dust control shall be applied as needed to accomplish dust control.

2.1.10 Temporary loam, seed, and mulching shall be used in areas where no other erosion control measure is used. Application rates for seeding are provided at the end of this report.

2.1.11 Stockpiles shall be stabilized within 7 days of formation unless a scheduled rain event occurs prior to the 7-day window, in which case the stockpile shall be stabilized prior to the rain event. Methods of stabilization shall be mulch, erosion control mix, or erosion control blankets/mats. Silt fence or a wood waste compost filter berm shall be placed downhill of any soil stockpile location.

2.1.12 For disturbance between November 1 and April 15, please refer to winter stabilization plan in this report and the Maine Erosion and Sediment Control BMP manual for further information.

2.1.13 It is of the utmost importance that stormwater runoff and potential sediment from the construction site be diverted around the proposed underdrains until the trench is backfilled.

2.2 Permanent Erosion Control Measures

The following permanent erosion control measures are intended for post disturbance areas of the project.

2.2.1 All disturbed areas during construction, not subject to other proposed conditions, shall receive a minimum 4" of loam, limed, and mulched. Erosion control blankets or mats shall be placed over the mulch in areas noted in paragraph 4.1 of this report.

2.2.2 All stormwater devices shall be installed, and tributary areas stabilized prior receiving stormwater.

2.2.3 Refer to the Maine Erosion and Sediment Control BMP manual for additional information.

3.0 EROSION AND SEDIMENTATION CONTROL PLAN

3.1 The Erosion and Sedimentation Control Plan is included within the plan set.

4.0 DETAILS AND SPECIFICATIONS

4.1 Erosion Control Details and Specifications are included in the plan set.

5.0 STABILIZATION PLAN FOR WINTER CONSTRUCTION

Winter Construction consists of earthwork disturbance between the dates of November 1 and April 15. If a construction site is not stabilized with pavement, a road gravel base, 75% mature vegetation cover or riprap by November 15, then the site shall be protected with over-winter stabilization. Any area not stabilized with pavement, vegetation, mulching, erosion control mix, erosion control mats, riprap, or gravel base on a road shall be considered open.

The contractor shall limit the work area to areas that work will occur in during the subsequent 15 days and so that it can be mulched one day prior to a snow event. The contractor shall stabilize work areas prior to opening additional work areas to minimize areas without erosion control measures.

The following measures shall be implemented during winter construction periods:

5.1 Sediment Barriers

During frozen conditions, sediment barriers may consist of erosion control mix berms or any other recognized sediment barriers as frozen soil prevents the proper installation of hay bales or silt fences.

5.2 Mulching

All areas shall be considered to be denuded until seeded and mulched. Hay and straw mulch shall be applied at a rate of 150 lb. per 1,000 square feet or 3 tons/acre (twice the normal accepted rate of 75-lbs./1,000 s.f. or 1.5 tons/acre) and shall be properly anchored. Erosion control mix must be applied with a minimum 4-inch thickness. Mulch shall not be spread on top of snow. The snow shall be removed down to a one-inch depth or less prior to application. After each day of final grading, the area shall be properly stabilized with anchored hay or straw or erosion control matting. An area shall be considered to have been stabilized when exposed surfaces have been either mulched or adequately anchored so that ground surface is not visible through the mulch. Between the dates of November 1 and April 15, all mulch

shall be anchored by either mulch netting, tracking or wood cellulose fiber. The cover will be considered sufficient when the ground surface is not visible through the mulch. After November 1st, mulch and anchoring of all exposed soil shall occur at the end of each final grading workday.

5.3 Soil Stockpiling

Stockpiles of soil or subsoil shall be mulched for over winter protection with hay or straw at twice the normal rate or with a four-inch layer of erosion control mix. This shall be done within 24 hours of stocking and re-established prior to any rainfall or snowfall.

5.4 Seeding

Between the dates of October 15th and April 1st, loam or seed shall not be required. During periods of above freezing temperatures finished areas shall be fine graded and either protected with mulch or temporarily seeded and mulched until the final treatment can be applied. If the date is after November 1st and if the exposed area has not been loamed, final grading with a uniform surface, then the area may be dormant seeded at a rate of 3 times higher than specified for permanent seed and then mulched.

Dormant seeding may be placed prior to the placement of mulch or erosion control blankets. If dormant seeding is used for the site, all disturbed areas shall receive 4" of loam and seed at an application rate of 5 lbs./1,000 s.f. All areas seeded during the winter shall be inspected in the spring for adequate catch. All areas insufficiently vegetated (less than 75% catch) shall be revegetated by replacing loam, seed and mulch. If dormant seeding is not used for the site, all disturbed areas shall be revegetated in the spring.

5.5 Over winter stabilization of disturbed soils

By September 15th, all disturbed soils on areas having a slope less than 15% shall be seeded and mulched. If the disturbed areas are not stabilized by this date, then one of the following actions shall be taken to stabilize the soil for late fall and winter:

- Stabilize the soil with temporary vegetation – By October 1st, seed the disturbed soil with winter rye at a seeding rate of 3lbs per 1,000 s.f., lightly mulch the seeded soil with hay or straw at 75 lbs per 1,000 s.f., and anchor the mulch with plastic netting. Monitor growth of the rye over the next 30 days. If the rye fails to grow at least three inches or fails to cover at least 75% of the disturbed soil before November 1st, then mulch the area for over-winter protection.

- Stabilize the soil with sod – Stabilize the disturbed soil with properly installed sod by October 1st. Proper installation includes pinning the sod onto the soil with wire pins, rolling the sod to guarantee contact between the sod and underlying soil, and watering the sod to promote root growth into the disturbed soil.

- Stabilize the soil with mulch – By November 15th, mulch the disturbed soil by spreading hay or straw at a rate of at least 150 lbs per 1,000 s.f. on the area so that no soil is visible through the mulch. Immediately after applying the mulch, anchor the mulch with plastic netting to prevent wind from moving the mulch off the disturbed soil.

5.6 Over winter stabilization of disturbed slopes

All stone-covered slopes shall be constructed and stabilized by November 15th. All slopes to be vegetated shall be seeded and mulched by September 1st. A slope is considered a grade greater than 15%. If a slope to be vegetated is not stabilized by September 1st, then one of the following action shall be taken to stabilize the slope for late fall and winter:

- Stabilize the soil with temporary vegetation and erosion control mats – By October 1st the disturbed slope shall be seeded with winter rye at a seeding rate of 3 lbs per 1,000 s.f. and then install erosion control mats or anchored mulch over the seeding. If the rye fails to grow at least three inches or fails to cover at least 75% of the slope by November 1st, then the contractor shall cover the slope with a layer of erosion control mix or with stone riprap.

- Stabilize the soil with sod – The disturbed slope shall be stabilized with properly installed sod by October 1st. Proper installation includes the contractor pinning the sod onto the slope with wire pins, rolling the sod to guarantee contact between the sod and underlying soil, and watering the sod to promote root growth into the disturbed soil. The contractor shall not use late-season sod installation to stabilize slopes having a grade greater than 3H:1V or having groundwater seeps on the slope face.

- Stabilize the soil with erosion control mix – Erosion control mix shall be properly installed by November 15th. The contractor shall not use erosion control mix to stabilize slopes having grades greater than 2H:1V or having groundwater seeps on the slope face.

- Stabilize the soil with stone riprap – Place a layer of stone riprap on the slope by November 15th. A registered professional engineer shall be hired to determine the stone size needed for stability on the slope and to design a filter layer for underneath the riprap.

6.0 INSPECTION AND MAINTENANCE

A person with knowledge of erosion and stormwater control, including the standards and conditions in the permit, shall conduct periodic visual inspections of installed erosion control measures. The frequency of inspection shall occur at least once every two weeks, as well as after a "storm event". A "storm event" shall consist 0.5 inches of rain within a 24-hour period. The following Erosion and Sediment Control - Best Management Practices (BMP's) shall inspected in the manner as described.

6.1 Sediment Barriers

Hay bale barriers and filter berms shall be inspected and repaired for the following if there are any signs of erosion or sedimentation below them. If there are signs of undercutting at the center or the edges of the barrier, or impounding of large volumes of water behind them, sediment barriers shall be replaced with a temporary check dam. Should the fabric on a silt fence or filter barrier decompose or become ineffective prior to the end of the expected usable life and the barrier is still necessary, the fabric shall be replaced promptly. Sediment deposits should be removed when deposits reach approximately one-half the height of the barrier. Filter berms should be reshaped as needed. Any sediment deposits remaining in place after the silt fence or filter barrier is no longer required should be dressed to conform to the existing grade, prepared and seeded.

6.2 Stabilized Stone Construction Entrances

The exit shall be maintained in a condition that will prevent tracking of sediment onto public rights-of-way. When the control pad becomes ineffective, the stone shall be removed along with the collected soil material and redistributed on site in a stable manner. The entrance should then be reconstructed. The contractor shall sweep or wash pavement at exits, which have experienced mud-tracking on to the pavement or traveled way. When washing is required, it shall be done on an area stabilized with aggregate, which drains into an approved sediment trapping device. All sediment shall be prevented from entering storm drains, ditches, or waterways.

6.3 Mulched Areas

All mulches must be inspected periodically, in particular after rainstorms, to check for rill erosion. If less than 90% of the soil surface is covered by mulch, additional mulch shall be immediately applied. Nets must be inspected after rain events for dislocation or failure. If washouts or breakage occur, re-install the nets as necessary after repairing damage to the slope. Where mulch is used in conjunction with ornamental plantings, inspect periodically throughout the year to determine if mulch is maintaining coverage of the soil surface. Repair as needed.

6.4 Dust Control

When temporary dust control measures are used, repetitive treatment shall be applied as needed to accomplish control.

6.5 Stormwater Appurtenances

All underdrains, storm drains, and catch basins need to be operating effectively and free of debris.

6.6 Erosion and Sedimentation Control Inspections:

Acorn Engineering has personnel qualified to conduct Erosion and Sedimentation Control Inspections. For further information, contact:

Contact: Will Savage, PE
Telephone: (207) 775-2655

Qualifications:

- Maine Professional Engineering License #11419
- Maine DEP - Certified in Maintenance & Inspection of Stormwater BMP's Cert #14
- Certified Erosion, Sediment and Storm Water Inspector (CESSWI) Cert #0293
- Certified Professional in Erosion and Sediment Control (CPESC) Cert. #4620

The Contractor has sole responsibility for complying with the Erosion and Sedimentation Report/Plan, including control of fugitive dust. The Contractor shall be responsible for any monetary penalties resulting from failure to comply with these standards.

7.0 IMPLEMENTATION SCHEDULE

The following implementation sequence is intended to maximize the effectiveness of the above described erosion control measures. Contractors should avoid overexposing disturbed areas and limit the amount of stabilization area.

1. Install a stabilized construction entrance in all locations where construction traffic will enter and exit the site.
2. Install perimeter erosion control berm with hay bale reinforcement
3. Install all other erosion control devices as necessary throughout the remainder of this schedule.
4. Commence earthwork operations, associated with the roadway construction.
5. Commence installation of any utility work.
6. Continue earthwork and grading to subgrade as necessary for construction.
7. Complete installation of utilities.
8. Complete remaining earthwork operations.
9. Install sub-base and base gravels in paved areas.
10. Install paving, curbing and brickwork.
11. Loam, lime, fertilize, seed and mulch disturbed areas and complete all landscaping.
12. Once the site is stabilized, 90% catch of grass has been obtained, or mulching of landscape areas is complete, remove all temporary erosion control measures.
13. Touch up areas without a vigorous catch of grass with loam and seed.
14. Complete site signage and striping.

The above implementation sequence should be generally followed by the site contractor. However, the contractor may construct several items simultaneously. The contractor shall submit to the owner a schedule of the completion of the work. If the contractor is to commence the construction of more than one item above, they shall limit the amount of exposed areas to those areas in which work is expected to be undertaken during the following 30 days.

The contractor shall re-vegetate disturbed areas as rapidly as possible. All areas shall be permanently stabilized within 7 days of final grading or before a storm event. The contractor shall incorporate planned inlets and drainage systems as early as possible into the construction phase.

8.0 CONCLUSION

The above erosion control narrative is intended to minimize the development impact by implementing temporary and permanent erosion control measures. The contractor shall also refer to the Maine Erosion and Sediment Control BMP manual for additional information.

9.0 ATTACHMENTS

- Temporary Seeding Plan
- Permanent Seeding Plan

TEMPORARY SEEDING PLAN

Site Preparation

The seeded areas shall be feasibly graded out to provide the use of equipment for seedbed preparation, seeding, mulch application, and mulch anchoring. If necessary, the site may require additional temporary erosion control measures outlined in the Erosion Control report.

Seedbed Preparation

Fertilizer shall be applied to the site at a rate of 13.8 pounds per 1,000 square feet. The composition of the fertilizer shall be 10-10-10 (N-P2O5-K2O) or equivalent.

Limestone shall be applied to the site at a rate of 138 pounds per 1,000 square feet.

Seeding

The composition and amount of temporary seed applied to a site shall be determined by the following table:

Seed	Pounds / 1,000 S.F.	Recommended Seeding Dates
Winter Rye	2.57	Aug-15 to Oct-1
Oats	1.84	Apr-1 to Jul-1 Aug-15 to Sep-15
Annual Ryegrass	0.92	Apr-1 to Jul-1
Sudangrass	0.92	May-15 to Aug-15
Perennial	0.92	Aug-15 to Sep-15

Mulching

Mulch shall be applied at a rate of 70 lbs – 90 lbs per 1,000 square feet. The mulch shall be installed at a minimum depth of 4 inches. The seeded area shall be mulched immediately after seed is applied. Mulching during the winter season shall be double the normal amount.

Conclusion

Please refer to the Maine Erosion and Sediment Control BMP manual for additional information pertaining to temporary seeding and mulching.

PERMANENT SEEDING PLAN

Site Preparation

The seeded areas shall be feasibly graded out to provide the use of equipment for seedbed preparation, seeding, mulch application, and mulch anchoring. If necessary, the site may require additional temporary erosion control measures outlined in the Erosion Control report.

Seedbed Preparation

Fertilizer shall be applied to the site at a rate of 13.8 pounds per 1,000 square feet. The composition of the fertilizer shall be 10-10-10 (N-P2O5-K2O) or equivalent.

Limestone shall be applied to the site at a rate of 138 pounds per 1,000 square feet.

Seeding

The composition and amount of permanent seed applied to a site shall be determined by the following table:

Seed	Pounds / 1,000 S.F.
Kentucky Bluegrass	0.46
Creeping Red Fescue	0.46
Perennial Ryegrass	0.11
Total	1.03

Mulching

Mulch shall be applied at a rate of 70 lbs – 90 lbs per 1,000 square feet. The mulch shall be installed at a minimum depth of 4 inches. The seeded area shall be mulched immediately after seed is applied. Mulching during the winter season shall be double the normal amount.

Recommendations

Permanent seeding is recommended to be completed in the spring. Later summer seeding is allowed if completed prior to September 1st. If seeding cannot be accomplished during the periods recommended for permanent seeding, then the contractor shall perform temporary seeding per the temporary seeding plan.

Conclusion

Please refer to the Maine Erosion and Sediment Control BMP manual for additional information pertaining to permanent seeding and mulching.

United States Department of Agriculture

Natural Resources Conservation Service

A product of the National Cooperative Soil Survey, a joint effort of the United States Department of Agriculture and other Federal agencies, State agencies including the Agricultural Experiment Stations, and local participants

Custom Soil Resource Report for

York County, Maine

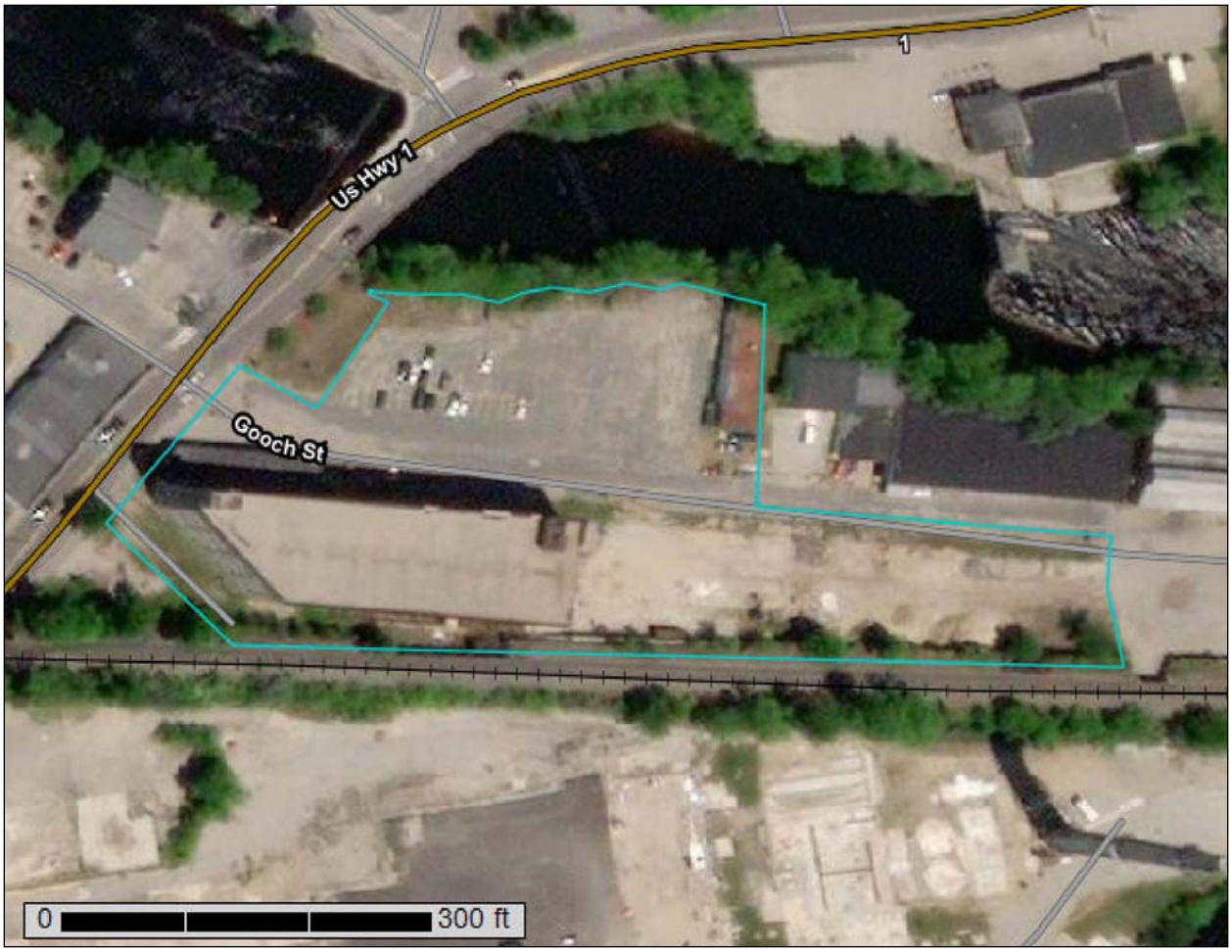

Preface

Soil surveys contain information that affects land use planning in survey areas. They highlight soil limitations that affect various land uses and provide information about the properties of the soils in the survey areas. Soil surveys are designed for many different users, including farmers, ranchers, foresters, agronomists, urban planners, community officials, engineers, developers, builders, and home buyers. Also, conservationists, teachers, students, and specialists in recreation, waste disposal, and pollution control can use the surveys to help them understand, protect, or enhance the environment.

Various land use regulations of Federal, State, and local governments may impose special restrictions on land use or land treatment. Soil surveys identify soil properties that are used in making various land use or land treatment decisions. The information is intended to help the land users identify and reduce the effects of soil limitations on various land uses. The landowner or user is responsible for identifying and complying with existing laws and regulations.

Although soil survey information can be used for general farm, local, and wider area planning, onsite investigation is needed to supplement this information in some cases. Examples include soil quality assessments (http://www.nrcs.usda.gov/wps/portal/nrcs/main/soils/health/) and certain conservation and engineering applications. For more detailed information, contact your local USDA Service Center (https://offices.sc.egov.usda.gov/locator/app?agency=nrcs) or your NRCS State Soil Scientist (http://www.nrcs.usda.gov/wps/portal/nrcs/detail/soils/contactus/?cid=nrcs142p2_053951).

Great differences in soil properties can occur within short distances. Some soils are seasonally wet or subject to flooding. Some are too unstable to be used as a foundation for buildings or roads. Clayey or wet soils are poorly suited to use as septic tank absorption fields. A high water table makes a soil poorly suited to basements or underground installations.

The National Cooperative Soil Survey is a joint effort of the United States Department of Agriculture and other Federal agencies, State agencies including the Agricultural Experiment Stations, and local agencies. The Natural Resources Conservation Service (NRCS) has leadership for the Federal part of the National Cooperative Soil Survey.

Information about soils is updated periodically. Updated information is available through the NRCS Web Soil Survey, the site for official soil survey information.

The U.S. Department of Agriculture (USDA) prohibits discrimination in all its programs and activities on the basis of race, color, national origin, age, disability, and where applicable, sex, marital status, familial status, parental status, religion, sexual orientation, genetic information, political beliefs, reprisal, or because all or a part of an individual's income is derived from any public assistance program. (Not all prohibited bases apply to all programs.) Persons with disabilities who require

alternative means for communication of program information (Braille, large print, audiotape, etc.) should contact USDA's TARGET Center at (202) 720-2600 (voice and TDD). To file a complaint of discrimination, write to USDA, Director, Office of Civil Rights, 1400 Independence Avenue, S.W., Washington, D.C. 20250-9410 or call (800) 795-3272 (voice) or (202) 720-6382 (TDD). USDA is an equal opportunity provider and employer.

Contents

Preface..... 2
How Soil Surveys Are Made..... 5
Soil Map..... 8
Soil Map..... 9
Legend..... 10
Map Unit Legend..... 11
Map Unit Descriptions..... 11
York County, Maine..... 13
Ur—Urban land..... 13
References..... 15

How Soil Surveys Are Made

Soil surveys are made to provide information about the soils and miscellaneous areas in a specific area. They include a description of the soils and miscellaneous areas and their location on the landscape and tables that show soil properties and limitations affecting various uses. Soil scientists observed the steepness, length, and shape of the slopes; the general pattern of drainage; the kinds of crops and native plants; and the kinds of bedrock. They observed and described many soil profiles. A soil profile is the sequence of natural layers, or horizons, in a soil. The profile extends from the surface down into the unconsolidated material in which the soil formed or from the surface down to bedrock. The unconsolidated material is devoid of roots and other living organisms and has not been changed by other biological activity.

Currently, soils are mapped according to the boundaries of major land resource areas (MLRAs). MLRAs are geographically associated land resource units that share common characteristics related to physiography, geology, climate, water resources, soils, biological resources, and land uses (USDA, 2006). Soil survey areas typically consist of parts of one or more MLRA.

The soils and miscellaneous areas in a survey area occur in an orderly pattern that is related to the geology, landforms, relief, climate, and natural vegetation of the area. Each kind of soil and miscellaneous area is associated with a particular kind of landform or with a segment of the landform. By observing the soils and miscellaneous areas in the survey area and relating their position to specific segments of the landform, a soil scientist develops a concept, or model, of how they were formed. Thus, during mapping, this model enables the soil scientist to predict with a considerable degree of accuracy the kind of soil or miscellaneous area at a specific location on the landscape.

Commonly, individual soils on the landscape merge into one another as their characteristics gradually change. To construct an accurate soil map, however, soil scientists must determine the boundaries between the soils. They can observe only a limited number of soil profiles. Nevertheless, these observations, supplemented by an understanding of the soil-vegetation-landscape relationship, are sufficient to verify predictions of the kinds of soil in an area and to determine the boundaries.

Soil scientists recorded the characteristics of the soil profiles that they studied. They noted soil color, texture, size and shape of soil aggregates, kind and amount of rock fragments, distribution of plant roots, reaction, and other features that enable them to identify soils. After describing the soils in the survey area and determining their properties, the soil scientists assigned the soils to taxonomic classes (units). Taxonomic classes are concepts. Each taxonomic class has a set of soil characteristics with precisely defined limits. The classes are used as a basis for comparison to classify soils systematically. Soil taxonomy, the system of taxonomic classification used in the United States, is based mainly on the kind and character of soil properties and the arrangement of horizons within the profile. After the soil

scientists classified and named the soils in the survey area, they compared the individual soils with similar soils in the same taxonomic class in other areas so that they could confirm data and assemble additional data based on experience and research.

The objective of soil mapping is not to delineate pure map unit components; the objective is to separate the landscape into landforms or landform segments that have similar use and management requirements. Each map unit is defined by a unique combination of soil components and/or miscellaneous areas in predictable proportions. Some components may be highly contrasting to the other components of the map unit. The presence of minor components in a map unit in no way diminishes the usefulness or accuracy of the data. The delineation of such landforms and landform segments on the map provides sufficient information for the development of resource plans. If intensive use of small areas is planned, onsite investigation is needed to define and locate the soils and miscellaneous areas.

Soil scientists make many field observations in the process of producing a soil map. The frequency of observation is dependent upon several factors, including scale of mapping, intensity of mapping, design of map units, complexity of the landscape, and experience of the soil scientist. Observations are made to test and refine the soil-landscape model and predictions and to verify the classification of the soils at specific locations. Once the soil-landscape model is refined, a significantly smaller number of measurements of individual soil properties are made and recorded. These measurements may include field measurements, such as those for color, depth to bedrock, and texture, and laboratory measurements, such as those for content of sand, silt, clay, salt, and other components. Properties of each soil typically vary from one point to another across the landscape.

Observations for map unit components are aggregated to develop ranges of characteristics for the components. The aggregated values are presented. Direct measurements do not exist for every property presented for every map unit component. Values for some properties are estimated from combinations of other properties.

While a soil survey is in progress, samples of some of the soils in the area generally are collected for laboratory analyses and for engineering tests. Soil scientists interpret the data from these analyses and tests as well as the field-observed characteristics and the soil properties to determine the expected behavior of the soils under different uses. Interpretations for all of the soils are field tested through observation of the soils in different uses and under different levels of management. Some interpretations are modified to fit local conditions, and some new interpretations are developed to meet local needs. Data are assembled from other sources, such as research information, production records, and field experience of specialists. For example, data on crop yields under defined levels of management are assembled from farm records and from field or plot experiments on the same kinds of soil.

Predictions about soil behavior are based not only on soil properties but also on such variables as climate and biological activity. Soil conditions are predictable over long periods of time, but they are not predictable from year to year. For example, soil scientists can predict with a fairly high degree of accuracy that a given soil will have a high water table within certain depths in most years, but they cannot predict that a high water table will always be at a specific level in the soil on a specific date.

After soil scientists located and identified the significant natural bodies of soil in the survey area, they drew the boundaries of these bodies on aerial photographs and

identified each as a specific map unit. Aerial photographs show trees, buildings, fields, roads, and rivers, all of which help in locating boundaries accurately.

Soil Map

The soil map section includes the soil map for the defined area of interest, a list of soil map units on the map and extent of each map unit, and cartographic symbols displayed on the map. Also presented are various metadata about data used to produce the map, and a description of each soil map unit.

Custom Soil Resource Report
Soil Map

Map Scale: 1:1,380 if printed on A landscape (11" x 8.5") sheet.

N

Meters: 0 20 40 80 120

Feet: 0 50 100 200 300

Map projection: Web Mercator Corner coordinates: WGS84 Edge tics: UTM Zone 19N WGS84

MAP LEGEND

Area of Interest (AOI)

Area of Interest (AOI)

Soils

Soil Map Unit Polygons

Soil Map Unit Lines

Soil Map Unit Points

Special Point Features

Blowout

Borrow Pit

Clay Spot

Closed Depression

Gravel Pit

Gravelly Spot

Landfill

Lava Flow

Marsh or swamp

Mine or Quarry

Miscellaneous Water

Perennial Water

Rock Outcrop

Saline Spot

Sandy Spot

Severely Eroded Spot

Sinkhole

Slide or Slip

Sodic Spot

Spoil Area

Stony Spot

Very Stony Spot

Wet Spot

Other

Special Line Features

Water Features

Streams and Canals

Transportation

Rails

Interstate Highways

US Routes

Major Roads

Local Roads

Background

Aerial Photography

MAP INFORMATION

The soil surveys that comprise your AOI were mapped at 1:20,000.

Warning: Soil Map may not be valid at this scale.

Enlargement of maps beyond the scale of mapping can cause misunderstanding of the detail of mapping and accuracy of soil line placement. The maps do not show the small areas of contrasting soils that could have been shown at a more detailed scale.

Please rely on the bar scale on each map sheet for map measurements.

Source of Map: Natural Resources Conservation Service
Web Soil Survey URL:
Coordinate System: Web Mercator (EPSG:3857)

Maps from the Web Soil Survey are based on the Web Mercator projection, which preserves direction and shape but distorts distance and area. A projection that preserves area, such as the Albers equal-area conic projection, should be used if more accurate calculations of distance or area are required.

This product is generated from the USDA-NRCS certified data as of the version date(s) listed below.

Soil Survey Area: York County, Maine
Survey Area Data: Version 19, May 29, 2020

Soil map units are labeled (as space allows) for map scales 1:50,000 or larger.

Date(s) aerial images were photographed: Dec 31, 2009—Sep 9, 2017

The orthophoto or other base map on which the soil lines were compiled and digitized probably differs from the background imagery displayed on these maps. As a result, some minor shifting of map unit boundaries may be evident.

Map Unit Legend

Map Unit Symbol	Map Unit Name	Acres in AOI	Percent of AOI
Ur	Urban land	3.7	100.0%
Totals for Area of Interest		**3.7**	**100.0%**

Map Unit Descriptions

The map units delineated on the detailed soil maps in a soil survey represent the soils or miscellaneous areas in the survey area. The map unit descriptions, along with the maps, can be used to determine the composition and properties of a unit.

A map unit delineation on a soil map represents an area dominated by one or more major kinds of soil or miscellaneous areas. A map unit is identified and named according to the taxonomic classification of the dominant soils. Within a taxonomic class there are precisely defined limits for the properties of the soils. On the landscape, however, the soils are natural phenomena, and they have the characteristic variability of all natural phenomena. Thus, the range of some observed properties may extend beyond the limits defined for a taxonomic class. Areas of soils of a single taxonomic class rarely, if ever, can be mapped without including areas of other taxonomic classes. Consequently, every map unit is made up of the soils or miscellaneous areas for which it is named and some minor components that belong to taxonomic classes other than those of the major soils.

Most minor soils have properties similar to those of the dominant soil or soils in the map unit, and thus they do not affect use and management. These are called noncontrasting, or similar, components. They may or may not be mentioned in a particular map unit description. Other minor components, however, have properties and behavioral characteristics divergent enough to affect use or to require different management. These are called contrasting, or dissimilar, components. They generally are in small areas and could not be mapped separately because of the scale used. Some small areas of strongly contrasting soils or miscellaneous areas are identified by a special symbol on the maps. If included in the database for a given area, the contrasting minor components are identified in the map unit descriptions along with some characteristics of each. A few areas of minor components may not have been observed, and consequently they are not mentioned in the descriptions, especially where the pattern was so complex that it was impractical to make enough observations to identify all the soils and miscellaneous areas on the landscape.

The presence of minor components in a map unit in no way diminishes the usefulness or accuracy of the data. The objective of mapping is not to delineate pure taxonomic classes but rather to separate the landscape into landforms or landform segments that have similar use and management requirements. The delineation of such segments on the map provides sufficient information for the development of resource plans. If intensive use of small areas is planned, however, onsite investigation is needed to define and locate the soils and miscellaneous areas.

An identifying symbol precedes the map unit name in the map unit descriptions. Each description includes general facts about the unit and gives important soil properties and qualities.

Soils that have profiles that are almost alike make up a *soil series*. Except for differences in texture of the surface layer, all the soils of a series have major horizons that are similar in composition, thickness, and arrangement.

Soils of one series can differ in texture of the surface layer, slope, stoniness, salinity, degree of erosion, and other characteristics that affect their use. On the basis of such differences, a soil series is divided into *soil phases*. Most of the areas shown on the detailed soil maps are phases of soil series. The name of a soil phase commonly indicates a feature that affects use or management. For example, Alpha silt loam, 0 to 2 percent slopes, is a phase of the Alpha series.

Some map units are made up of two or more major soils or miscellaneous areas. These map units are complexes, associations, or undifferentiated groups.

A *complex* consists of two or more soils or miscellaneous areas in such an intricate pattern or in such small areas that they cannot be shown separately on the maps. The pattern and proportion of the soils or miscellaneous areas are somewhat similar in all areas. Alpha-Beta complex, 0 to 6 percent slopes, is an example.

An *association* is made up of two or more geographically associated soils or miscellaneous areas that are shown as one unit on the maps. Because of present or anticipated uses of the map units in the survey area, it was not considered practical or necessary to map the soils or miscellaneous areas separately. The pattern and relative proportion of the soils or miscellaneous areas are somewhat similar. Alpha-Beta association, 0 to 2 percent slopes, is an example.

An *undifferentiated group* is made up of two or more soils or miscellaneous areas that could be mapped individually but are mapped as one unit because similar interpretations can be made for use and management. The pattern and proportion of the soils or miscellaneous areas in a mapped area are not uniform. An area can be made up of only one of the major soils or miscellaneous areas, or it can be made up of all of them. Alpha and Beta soils, 0 to 2 percent slopes, is an example.

Some surveys include *miscellaneous areas*. Such areas have little or no soil material and support little or no vegetation. Rock outcrop is an example.

York County, Maine

Ur—Urban land

Map Unit Setting

National map unit symbol: 9k6x
Elevation: 10 to 2,200 feet
Mean annual precipitation: 30 to 50 inches
Mean annual air temperature: 37 to 46 degrees F
Frost-free period: 70 to 160 days
Farmland classification: Not prime farmland

Map Unit Composition

Urban land: 90 percent
Minor components: 10 percent
Estimates are based on observations, descriptions, and transects of the mapunit.

Description of Urban Land

Setting

Landform position (two-dimensional): Footslope, toeslope
Landform position (three-dimensional): Base slope, tread
Down-slope shape: Linear
Across-slope shape: Linear

Typical profile

H1 - 0 to 6 inches: variable

Properties and qualities

Slope: 0 to 8 percent
Drainage class: Moderately well drained
Depth to water table: About 24 to 72 inches
Available water capacity: Very low (about 0.0 inches)

Interpretive groups

Land capability classification (irrigated): None specified
Land capability classification (nonirrigated): 8s
Hydric soil rating: No

Minor Components

Scantic

Percent of map unit: 2 percent
Landform: Coastal plains
Landform position (two-dimensional): Toeslope
Landform position (three-dimensional): Dip
Down-slope shape: Concave
Across-slope shape: Concave
Hydric soil rating: Yes

Sulfihemists

Percent of map unit: 2 percent
Landform: Salt marshes
Landform position (two-dimensional): Toeslope
Landform position (three-dimensional): Talf
Down-slope shape: Linear

Across-slope shape: Linear
Hydric soil rating: Yes

Adams

Percent of map unit: 2 percent
Landform: Outwash plains
Landform position (two-dimensional): Footslope
Landform position (three-dimensional): Tread
Down-slope shape: Linear
Across-slope shape: Linear
Hydric soil rating: No

Buxton

Percent of map unit: 2 percent
Landform: Coastal plains
Landform position (two-dimensional): Footslope
Landform position (three-dimensional): Tread
Down-slope shape: Concave
Across-slope shape: Linear
Hydric soil rating: No

Croghan

Percent of map unit: 2 percent
Landform: Outwash plains
Landform position (two-dimensional): Toeslope
Landform position (three-dimensional): Tread
Down-slope shape: Linear
Across-slope shape: Linear
Hydric soil rating: No

References

American Association of State Highway and Transportation Officials (AASHTO). 2004. Standard specifications for transportation materials and methods of sampling and testing. 24th edition.

American Society for Testing and Materials (ASTM). 2005. Standard classification of soils for engineering purposes. ASTM Standard D2487-00.

Cowardin, L.M., V. Carter, F.C. Golet, and E.T. LaRoe. 1979. Classification of wetlands and deep-water habitats of the United States. U.S. Fish and Wildlife Service FWS/OBS-79/31.

Federal Register. July 13, 1994. Changes in hydric soils of the United States.

Federal Register. September 18, 2002. Hydric soils of the United States.

Hurt, G.W., and L.M. Vasilas, editors. Version 6.0, 2006. Field indicators of hydric soils in the United States.

National Research Council. 1995. Wetlands: Characteristics and boundaries.

Soil Survey Division Staff. 1993. Soil survey manual. Soil Conservation Service. U.S. Department of Agriculture Handbook 18. http://www.nrcs.usda.gov/wps/portal/nrcs/detail/national/soils/?cid=nrcs142p2_054262

Soil Survey Staff. 1999. Soil taxonomy: A basic system of soil classification for making and interpreting soil surveys. 2nd edition. Natural Resources Conservation Service, U.S. Department of Agriculture Handbook 436. http://www.nrcs.usda.gov/wps/portal/nrcs/detail/national/soils/?cid=nrcs142p2_053577

Soil Survey Staff. 2010. Keys to soil taxonomy. 11th edition. U.S. Department of Agriculture, Natural Resources Conservation Service. http://www.nrcs.usda.gov/wps/portal/nrcs/detail/national/soils/?cid=nrcs142p2_053580

Tiner, R.W., Jr. 1985. Wetlands of Delaware. U.S. Fish and Wildlife Service and Delaware Department of Natural Resources and Environmental Control, Wetlands Section.

United States Army Corps of Engineers, Environmental Laboratory. 1987. Corps of Engineers wetlands delineation manual. Waterways Experiment Station Technical Report Y-87-1.

United States Department of Agriculture, Natural Resources Conservation Service. National forestry manual. http://www.nrcs.usda.gov/wps/portal/nrcs/detail/soils/home/?cid=nrcs142p2_053374

United States Department of Agriculture, Natural Resources Conservation Service. National range and pasture handbook. http://www.nrcs.usda.gov/wps/portal/nrcs/detail/national/landuse/rangepasture/?cid=stelprdb1043084

United States Department of Agriculture, Natural Resources Conservation Service. National soil survey handbook, title 430-VI. http://www.nrcs.usda.gov/wps/portal/nrcs/detail/soils/scientists/?cid=nrcs142p2_054242

United States Department of Agriculture, Natural Resources Conservation Service. 2006. Land resource regions and major land resource areas of the United States, the Caribbean, and the Pacific Basin. U.S. Department of Agriculture Handbook 296. http://www.nrcs.usda.gov/wps/portal/nrcs/detail/national/soils/?cid=nrcs142p2_053624

United States Department of Agriculture, Soil Conservation Service. 1961. Land capability classification. U.S. Department of Agriculture Handbook 210. http://www.nrcs.usda.gov/Internet/FSE_DOCUMENTS/nrcs142p2_052290.pdf

Section 6: Traffic Overview

The proposed mixed-use redevelopment of the existing 6 story building at 1 Gooch Street includes 96 residential units and 320 self-storage units with surface parking. Access to the surface parking lot will be available from Gooch Street, with additional pedestrian access from Elm Street. The overarching goal of the project is to provide housing stock in proximity to services and work which will lower the demand on individual automobile needs.

The preliminary trip generation for the proposed project has been estimated using the Institute of Transportation Engineers (ITE) "Trip Generation" 10th Edition publication. The land uses utilized in the calculations include: Multifamily housing (mid-rise) apartments (LUC 221) and Mini-Warehouse (LUC 151). Accordingly, the preliminary trip analysis yields a PM peak hour increase of approximately 50 trips and an AM peak hour increase of approximately 42 trips. As the project is not expected to generate over 100 peak hour trips, a Traffic Movement Permit (TMP) from the Maine Department of Transportation (MDOT) is not required.

Overall, a moderate traffic increase is expected for this project due to the change in use of the site. Upon initial analysis, the surrounding street system is equipped to handle the increases and does not currently suffer from congestion.

In accordance with the City's Land Development Regulations, Performance Standards for off-street parking and loading, Table 6-49B: Parking space requirements, the project parking demand requires 1 space for every 50 units of self-storage and 1 space per dwelling unit (with the residential spaces designed exclusively for, and occupancy restricted to each unit), resulting in a total of 103 spaces required ((1 space/50 units x 320 self-storage units) + (1 space/D.U. x 96 D.U.) = 103 spaces). The project proposes to construct surface parking with 106 parking spaces to serve the development.

Multifamily Housing (Mid-Rise)
(221)

Vehicle Trip Ends vs: **Dwelling Units**
On a: **Weekday,**
AM Peak Hour of Generator

Setting/Location: **General Urban/Suburban**
Number of Studies: 48
Avg. Num. of Dwelling Units: 225
Directional Distribution: 27% entering, 73% exiting

Vehicle Trip Generation per Dwelling Unit

Average Rate	Range of Rates	Standard Deviation
0.32	0.06 - 0.77	0.17

Data Plot and Equation

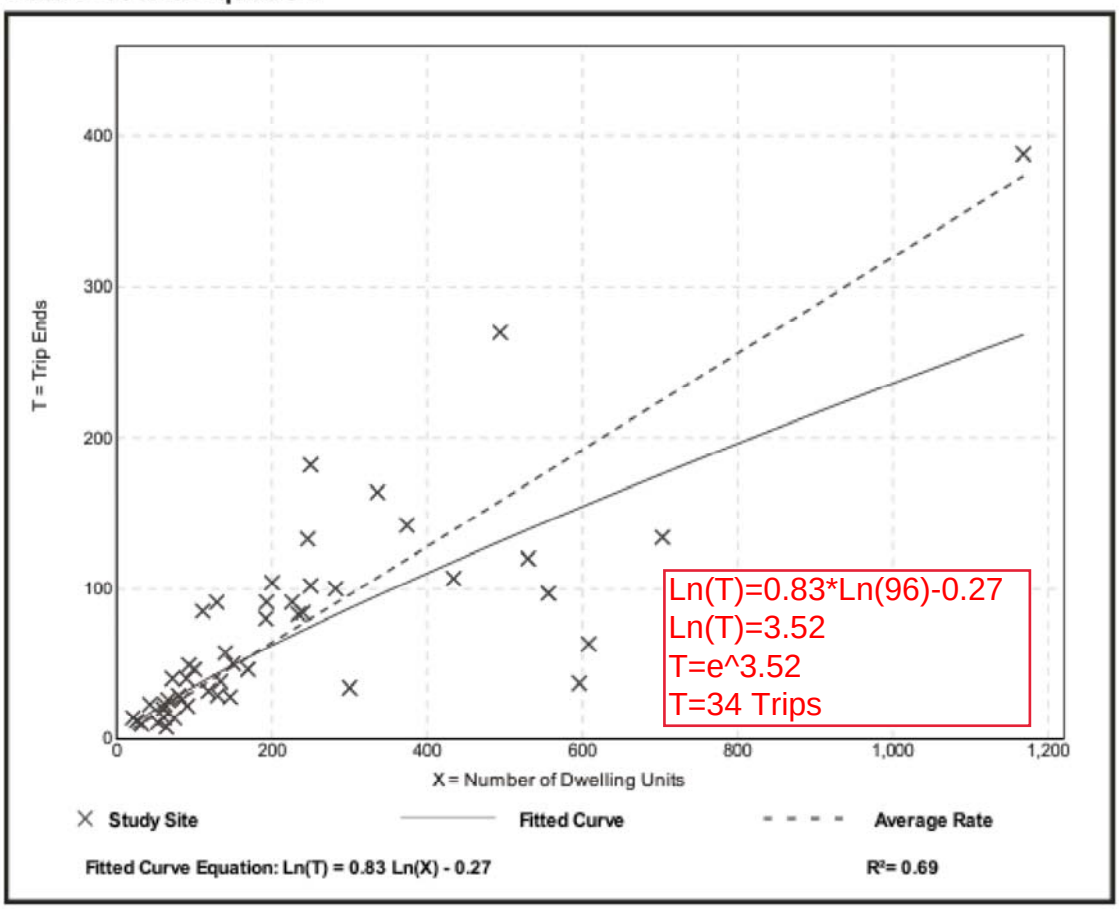

Multifamily Housing (Mid-Rise)
(221)

Vehicle Trip Ends vs: **Dwelling Units**
On a: **Weekday,**
PM Peak Hour of Generator

Setting/Location: **General Urban/Suburban**
Number of Studies: 47
Avg. Num. of Dwelling Units: 211
Directional Distribution: 60% entering, 40% exiting

Vehicle Trip Generation per Dwelling Unit

Average Rate	Range of Rates	Standard Deviation
0.41	0.09 - 1.26	0.22

Data Plot and Equation

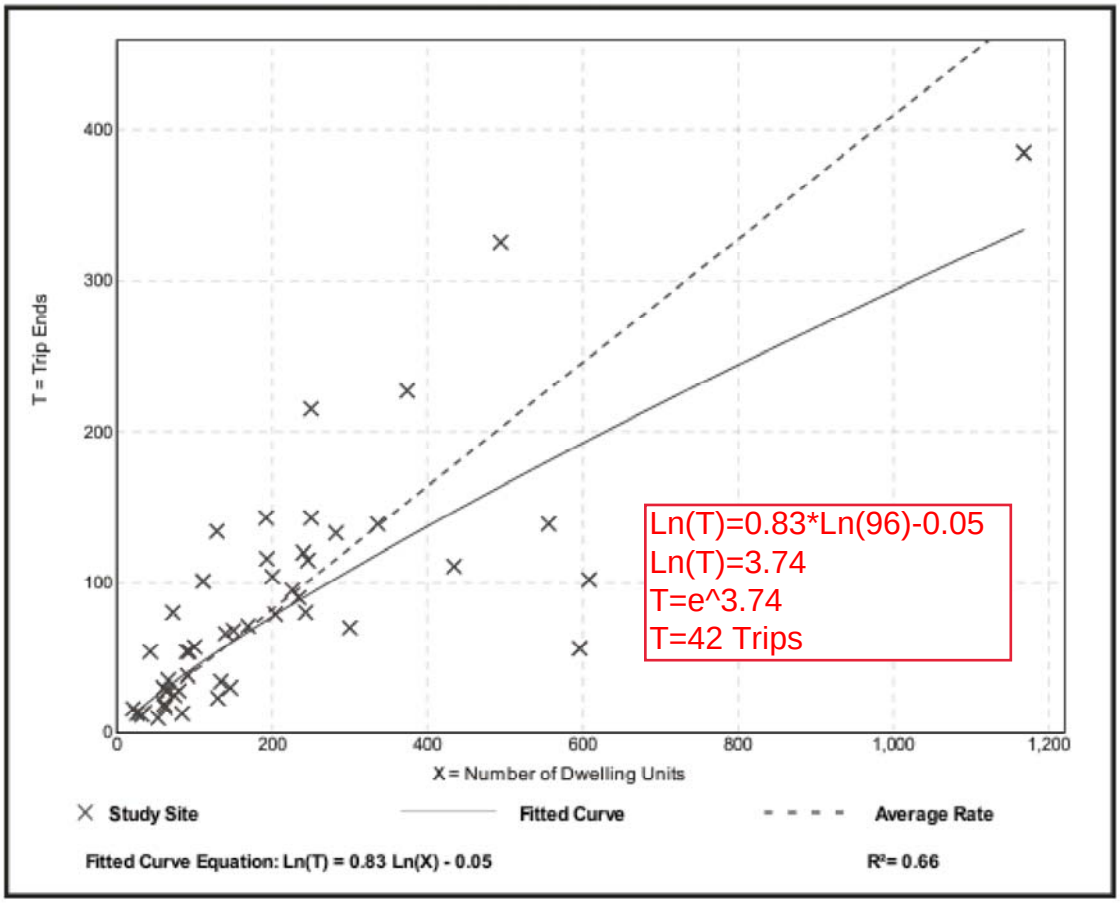

Mini-Warehouse
(151)

Vehicle Trip Ends vs: **Storage Units (100s)**
On a: **Weekday,**
AM Peak Hour of Generator

Setting/Location: **General Urban/Suburban**
Number of Studies: 7
Avg. Num. of Storage Units (100s): 5
Directional Distribution: 58% entering, 42% exiting

Vehicle Trip Generation per Storage Unit (100s)

Average Rate	Range of Rates	Standard Deviation
2.31	1.31 - 6.67	0.94

Data Plot and Equation

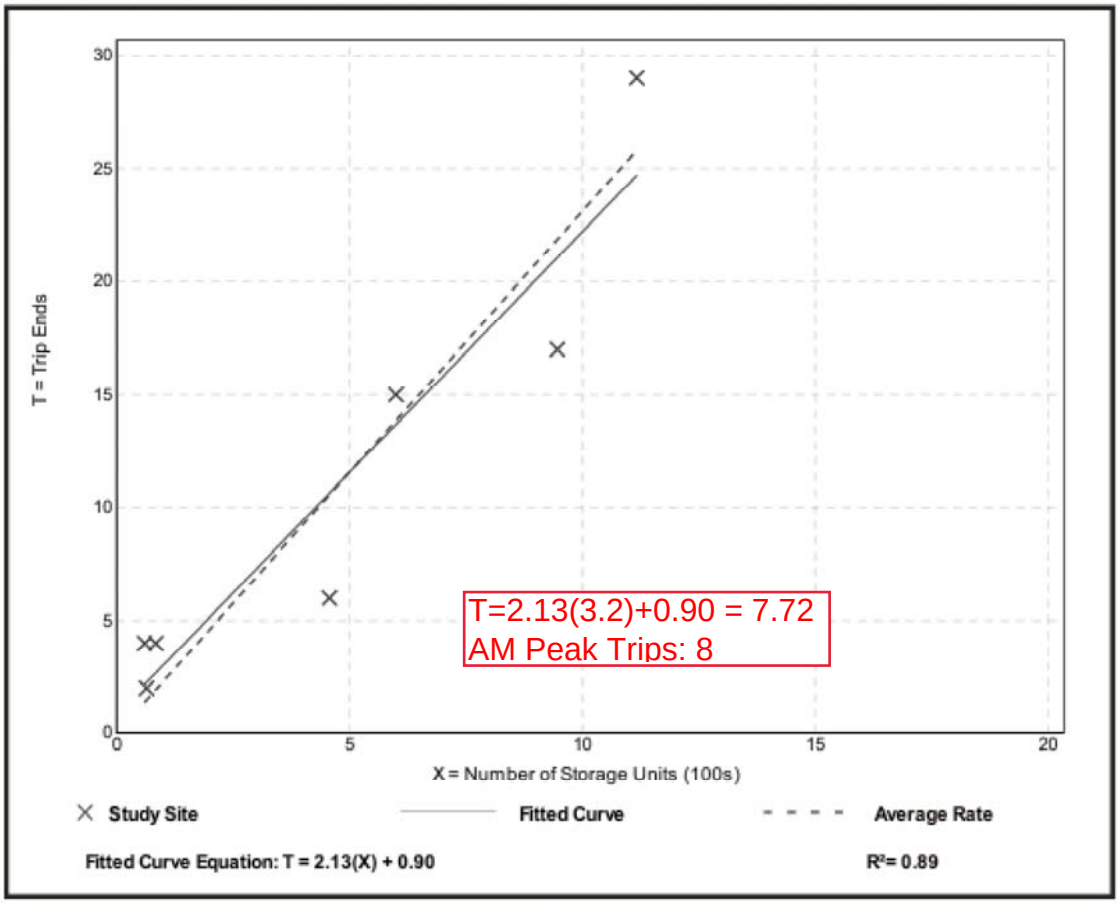

Mini-Warehouse
(151)

Vehicle Trip Ends vs: **Storage Units (100s)**
On a: **Weekday,**
PM Peak Hour of Generator

Setting/Location: **General Urban/Suburban**
Number of Studies: 7
Avg. Num. of Storage Units (100s): 5
Directional Distribution: 48% entering, 52% exiting

Vehicle Trip Generation per Storage Unit (100s)

Average Rate	Range of Rates	Standard Deviation
2.40	1.90 - 10.00	1.17

Data Plot and Equation

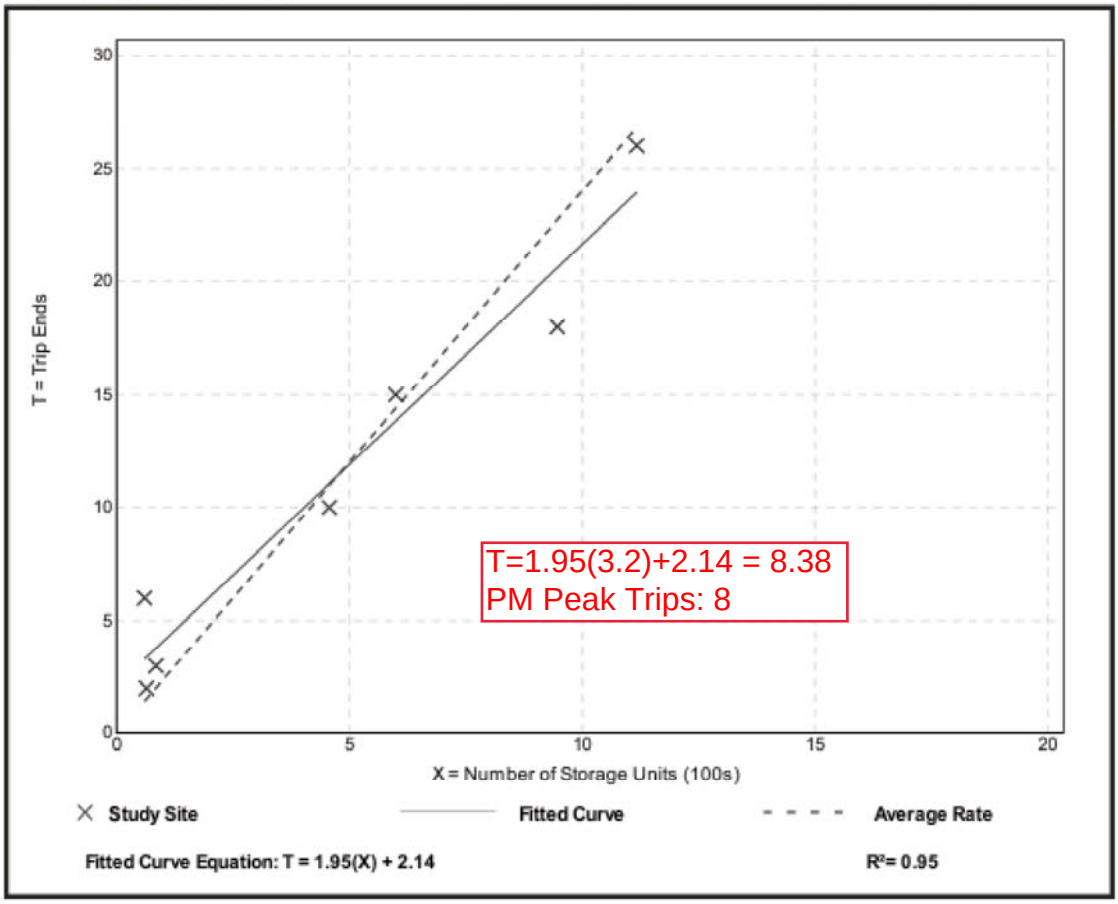

Section 7: Utilities Summary

The project proposes to utilize existing infrastructure in the area and provides utility upgrades for various utility lines. Summaries of each utility are as follows:

Water:

There is an existing 16" main in Elm Street with a water service connection to the building. There is an existing 8" private water main installed within Gooch Street. Based upon initial discussions with Maine Water and the proposed Gooch Street improvements, along with potential future demand along Gooch Street, the project is proposing to install a new 12" water main within Gooch Street, with a 6" fire suppression line and 2" domestic water service serving the 1 Gooch Street building. Additional services stubs will be provided along Gooch Street for potential connections to abutting lots without having to disturb the Gooch Street travel way. Further analysis by the mechanical and sprinkler subcontractors/designers will be required to ensure adequate demand and pressures within the system.

Sewer:

There is an existing private 4" sewer force main in Gooch Street based on a 2002 survey prepared by OEST Associates, Inc. Owen Haskell recently performed an updated survey, including locating underground utilities, which depict an unknown size/type of sewer service serving 20 & 30 Gooch Street. The project proposes to connect to the existing 12" sanitary sewer main within Elm Street and install a new gravity sanitary sewer line for the first 100 lf of Gooch Street, ending in a SMH. 1 Gooch Street will be served by a new gravity service into the gravity sewer main. East of the SMH, a new forcemain is proposed to maintain service connections to the other lots off Gooch Street, but further evaluation will be required to determine the existing line conditions and whether the existing services can be continued to be utilized to serve the remaining lots off Gooch Street. Additional services stubs will be provided along Gooch Street for potential connections to abutting lots without having to disturb the Gooch Street travel way.

Stormwater:

There are existing stormwater drainage catch basins and storm drains within the Gooch Street that are currently collecting surface water and ultimately discharging into the Saco River. The project proposes new stormwater infrastructure within Gooch Street to collect surface runoff. Portions of Gooch Street runoff will be directed to the existing Elm Street stormwater network. Eastern portions of Gooch Street proposes new catch basins and storm drains that will tie into the existing drainage manhole, which currently discharges into the Saco River. Additional services stubs will be provided along Gooch Street for potential connections to abutting lots without having to disturb the Gooch Street travel way.

Electric:

Gooch Street and the existing 1 Gooch Street building are currently served by overhead power lines. The project proposes to drop 3-phase electric services underground from an existing utility pole from the abutting river front lot across Gooch Street from the 1 Gooch Street building to serve the development, as well as provide underground electrical services to the eastern lots along Gooch Street. Additional services stubs will be provided along Gooch Street for potential connections to abutting lots without having to disturb the Gooch Street travel way.

Cable/Telephone:

The existing telephone and communications overhead lines will follow the electrical upgrades, including dropping the services underground from the existing manhole and run underground down Gooch Street. Additional services stubs will be provided along Gooch Street for potential connections to abutting lots without having to disturb the Gooch Street travel way.

Gas:

There is currently no natural gas service within the immediate vicinity of Elm Street or Gooch Street. Unitil has expressed interest in extending the existing gas main within Elm Street and the project proposes to connect to the new gas main extension in Elm Street and install a new gas main down Gooch Street to serve the 1 Gooch Street building, as well as the existing lots along Gooch Street. Additional services stubs will be provided along Gooch Street for potential connections to abutting lots without having to disturb the Gooch Street travel way.

In addition to the summaries above, Ability to serve letters have been sent out to the respective utility companies. Responses received are attached and any additional responses will be submitted to the Planning Department within the subsequent application.

Section 8: Public Safety Letter of Approvals

Please refer to the attached letters that were sent to the Fire and Police Departments on January 28, 2021. Responses from the Fire and Police Departments will be provided to the Planning Department upon receipt.

Per request of Deputy Chief Labrecque, we have added a vehicle tracking turning template to portray Biddeford's largest firetruck (Truck 32 100' aerial/platform – total length 46.75'). See attached for the firetruck's maneuverability throughout the proposed site.

A C O R N
ENGINEERING, INC.

Biddeford Police Dept.
Attn: Roger P. Beaupre, Chief of Police
39 Alfred St
Biddeford, ME 04005

February 3, 2021

Subject: 1 Gooch Street Redevelopment
Re: Ability to Serve

Mr. Beaupre:

On behalf of Tom Watson & Co., we are pleased to submit the following request for a letter of approval as required by the City of Biddeford Subdivision & Site Plan application. The project proposes to redevelopment the existing abandoned building into 320 self-storage units on the ground and second floor level with 96 residential units within the top existing 4 floors. The project also included a 106-space surface parking lot, Gooch Street, and utility infrastructure improvements.

The physical nature of the structure will be changing minimally; however, the plan proposes multiple wall pack lighting fixtures along the renovated building and new streetlights along Gooch Street and within the parking lot, thus increasing nighttime visibility for patrons and residents. Furthermore, the additional "eyes on the street" created by the new businesses and renters of the 96 apartments will provide another layer of security on Gooch Street and the abutting properties. Accessways for emergency vehicles will be maintained and generally provide ample opportunity to access the site. We envision the redeveloped mills functioning as a small community and overall, feel the proposed plan will improve public safety when compared to the existing condition by increasing the lighting and increasing the occupancy of the buildings.

Please do not hesitate to contact me for any questions or clarifications.

Sincerely,

William H. Savage, P.E.
Principal
Acorn Engineering, Inc.

Sincerely,

Peter Heil P.E.
Project Manager
Acorn Engineering, Inc.

A C O R N
ENGINEERING, INC.

Biddeford Fire Dept.
Attn: Mr. Scott Gagne, Chief of Fire Department
152 Alfred St
Biddeford, ME 04005

February 3, 2021

Subject: 1 Gooch Street Redevelopment
Re: Letter of Approval

Mr. Gagne:

On behalf of Tom Watson & Co., we are pleased to submit the following request for a letter of approval as required by the City of Biddeford Subdivision & Site Plan application. The project proposes to redevelopment the existing abandoned building into 320 self-storage units on the ground and second floor level with 96 residential units within the top existing 4 floors. The project also included a 106-space surface parking lot, Gooch Street, and utility infrastructure improvements.

Gooch Street improvements include formalizing the private travel way. Access to the building will be provided from Elm Street, Gooch Street, and the parking area to provide access to three sides of the building. Furthermore, the project proposes to drop portions of the existing overhead wires underground, which will improve clearance in the area that could prevent a fire truck or ambulance from accessing these areas.

From a fire protection standpoint, the project is proposing a new 12" watermain to run under Gooch Street, connecting to the existing 16" watermain in Elm Street. An existing fire hydrant is located across Elm Street approximately 85 feet from the existing building on the northwest corner of Diamond Street and a new fire hydrant is proposed at the parking lot entrance along Gooch Street. Additionally, the building will be sprinkled with a 6" fire suppression line.

Please let me know if you have any questions or if you would like additional information from the sprinkler designer or code summaries from the architect.

Sincerely,

William H. Savage, P.E.
Principal
Acorn Engineering, Inc.

Sincerely,

Peter Heil P.E.
Project Manager
Acorn Engineering, Inc.

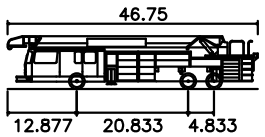

BIDDEFORD FIRETRUCK

Overall Length	46.750ft
Overall Width	8.500ft
Overall Body Height	9.851ft
Min Body Ground Clearance	0.920ft
Track Width	8.333ft
Lock-to-lock time	6.00s
Max Wheel Angle	45.00°

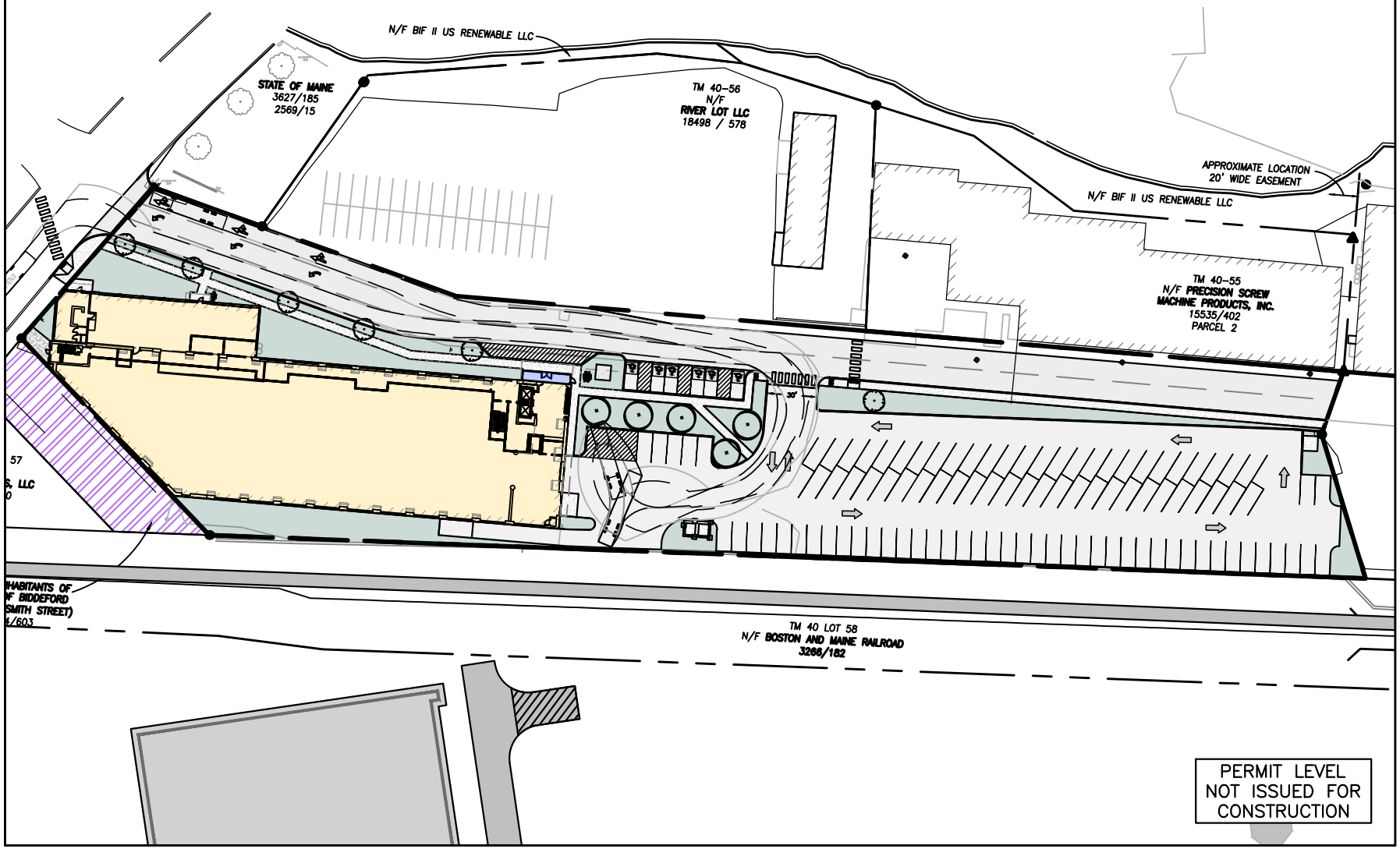

PERMIT LEVEL
NOT ISSUED FOR
CONSTRUCTION

ISSUED FOR	BY DATE
CITY REVIEW	PFH 2/10/21
	REV. DATE

DRAWING NAME: VEHICLE TRACKING TEMPLATE

PROJECT NAME: 1 GOOCH STREET REDEVELOPMENT

CLIENT: TOM WATSON & CO.

ACORN ENGINEERING, INC.

ACORN ENGINEERING, INC. P.O. BOX 3372
PORTLAND, MAINE 04104 (207) 775-2655

FILE:	1093.10_CIVIL
DATE:	2/2/2021
JN:	1093.10
SCALE:	1":90'
DESIGN BY:	PFH
DRAWN BY:	ZMS
CHECKED BY:	PFH

THIS PLAN SHALL NOT BE MODIFIED WITHOUT WRITTEN PERMISSION FROM ACORN ENGINEERING, INC. ANY ALTERATIONS, AUTHORIZED OR OTHERWISE, SHALL BE AT THE USER'S SOLE RISK AND WITHOUT LIABILITY TO ACORN ENGINEERING, INC.

DRAWING NO.

VTT

Section 9: Lighting

The project is proposing to install six (6) new streetlights along Gooch Street, as well as provide new light poles within the parking lot. Please refer to the Site Plan for locations of lighting fixtures. Overall, the goal is to allow for safety at night while also minimizing glare and light pollution especially given the proximity of the Site to the River. Additional building mounted light fixtures are proposed at entry locations and accent lighting approximately midway up the façade of the building between every 2nd or 3rd window bay (refer to attached accent lighting example).

Fixtures will be similar to the other redeveloped mills in Biddeford and will be in line with the character of the surrounding neighborhood and Mill District. Please refer to the attached lighting specifications proposed.

Stanford Black Outdoor LED Wall Up and Downlight $69.95 ADD TO CART

PRODUCT DETAILS | RELATED ITEMS | Q & A | REVIEWS

/ Outdoor Lighting / Contemporary / Possini Euro Design / Stanford Black Outdoor LED Wall Up And Downlight

< Go Back

2+

CHAT VIEW IN YOUR ROOM

MOST POPULAR

Stanford Black Outdoor LED Wall Up and Downlight - Style # 2W561

6 Reviews | 9 Questions, 14 Answers

SALE

$69.95

~~$99.99~~ | Save $30.00 | Comparable Value $149.99 | Ends 7/29/19

FREE SHIPPING & **FREE RETURNS*** | Low Price Guarantee

SHIPS TODAY! (orders by 5 PM Eastern)

1 ADD TO CART SAVE

This contemporary outdoor wall light sends LED illumination in a downward direction.

MORE DETAILS >

MORE YOU MAY LIKE

$79.99

$49.95

$99.99

$49.95

$79.99

Stanford Black Outdoor LED Wall Up and Downlight $69.95 ADD TO CART

PRODUCT DETAILS | RELATED ITEMS | Q & A | REVIEWS

out from the bottom and top of the design.

Shop all Possini Euro Design

Comparable to a 40 watt incandescent bulb. 420 lumens. 3000K. 80 CRI.

- Modern outdoor LED wall light from Possini Euro Design®. Wet location outdoor rated.
- Black finish. Die-cast aluminum construction.
- Tempered glass lens. Light is cast from both the top and bottom of the light.

RELATED VIDEOS

Switch to LED Bulbs Expert Tips

Mid Century Modern Style Tips and Ideas

Outdoor Lighting Size Guide

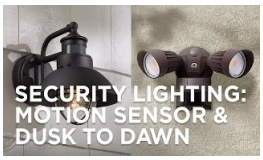

Security Lighting

RELATED ITEMS

$322.00
More Like This

$49.95
More Like This

$124.00
More Like This

$49.99
More Like This

Q & A

Need Immediate Help? Try CHAT

Questions that need answers | My Posts

ASK A QUESTION:

Have a question? Ask owners.

Start typing your question and we'll check if it was already asked and answered. Learn More

QUESTION: **Does this fixture come in white?**
A shopper on Jul 8, 2019

ANSWER:

(https://cdn11.bigcommerce.com/s-b9323/images/stencil/1280x1280/products/708/998/WPFC__10130.1415148080.jpg?c=2&imbypass=on)

(https://cdn11.bigcommerce.com
b9323/images/stencil/600x600/products/708/998/WPFC
c=2)

90 Watt LED Wall Pack With Full Cut Off High Lumens And Glare Free

SHOW SIDEBAR +

★★★★★ (No reviews yet)

Write a Review (https://ledglobalsupply.com/led-fixtures/90-watt-led-wall-pack-with-full-cut-off-high-lumens-and-glare-free/)

~~$339.90~~ **$199.90**

(You save $140.00)

SKU: GS-WP90-W-F/C

AltCategory: WALL PACKS

Quantity:

− 1 +

ADD TO CART

Like 0 Tweet Save Share

DESCRIPTION

PRODUCT REVIEW

SHIPPING & RETURNS

90 Watt LED Wall Pack With Full Cut Off

SKU: GS-WP90-W-F/C

The Global Series LED Wall Pack can be used indoor or outdoor and is designed for applications that require lighting with a long life and low maintenance requirement. 90 watts, full cutoff version.

With effective thermal management, corrosion-resistant, and die-cast aluminum enclosure with an architectural dark brown finish, eLucent WP series LED wall provides glare free, uniform illumination while providing a safe and comfortable visual experience.

Superior 60%-90% energy savings, compared to halogen lamp or a metal

SHOW SIDEBAR +

halide lamp. High lumen output, energy-efficient optical control and easy universal installation features confirm the LED wall pack as the absolute choice for indoor and outdoor illumination.

- Brand: Global
- Compares To: 350 WATT HPS
- Color: White
- Length: 18.25 Inches
- Color Temperature: 5,000K
- Width: 13.54 Inches
- Wattage: 90 Watts
- Height: 9.06 Inches
- CRI : >85
- Light Source: SMD LED
- Lumens: 8,500
- Non Dimmable
- Volts: 100-277V AC
- Life Time: 50,000 Hours

Product Inquiries:
SKU: GS-WP90-W-F/C
(800) 541-5006 <TapToCall

Sign-In/Create Account (https://ledglobalsupply.com/login.php?)
Instant Message Us (https://ledglobalsupply.net/fasthelp/)
Home Page (https://ledglobalsupply.com/)

SHOW SIDEBAR +

TOP

Section 10: Solid Waste

The property management company or owner shall be responsible for managing and contracting with a private hauler to remove solid waste. The expectation is that solid waste would be collected weekly by the private hauler. Solid waste containers will be located both internally and externally. The external dumpster and transformer will be screened by a cedar fence on all sides.

Solid waste produced by the redevelopment is predictable in that it will generate a fair amount of recyclable material such as cardboard and plastic due to residents' daily needs. Garbage generation is anticipated to be relatively low when compared to a typical residential use given the majority of one-bedroom unit typology as well as the urban environment that provides amenities and services in proximity to the living space.

Section 11: Photographs

1. Standing north of existing building on Gooch Street, facing southwest toward Elm Street.

2. Standing north of existing building on Gooch Street, facing southeast.

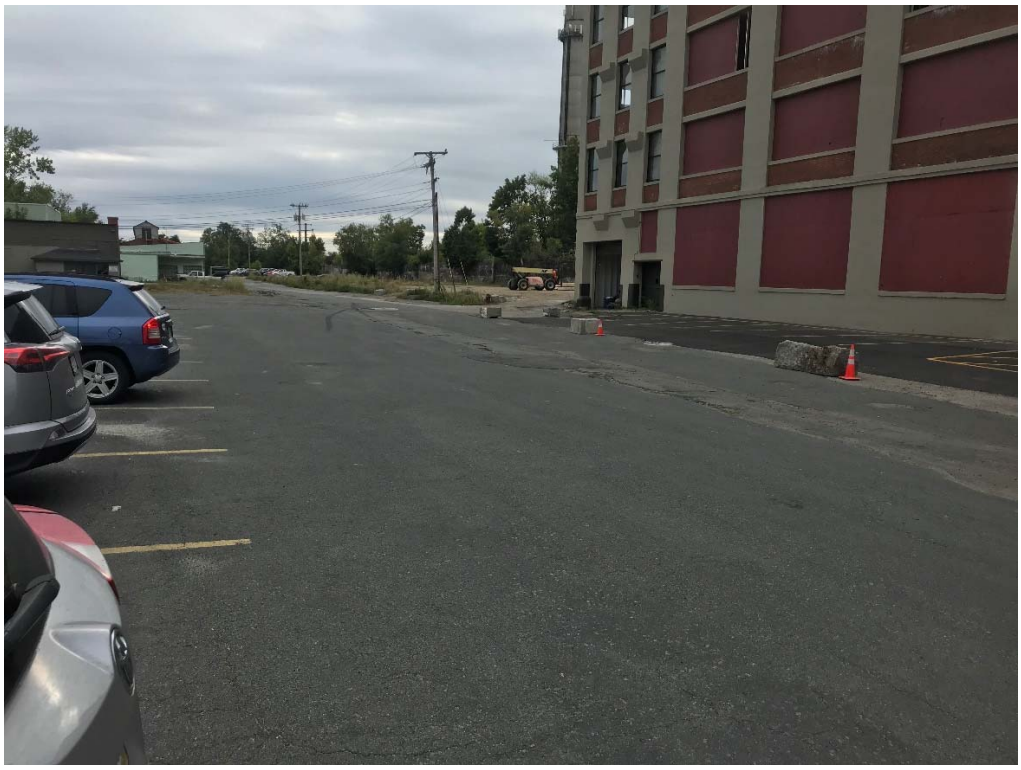

3. Facing east looking down Gooch Street.

4. Facing west looking down Gooch Street.

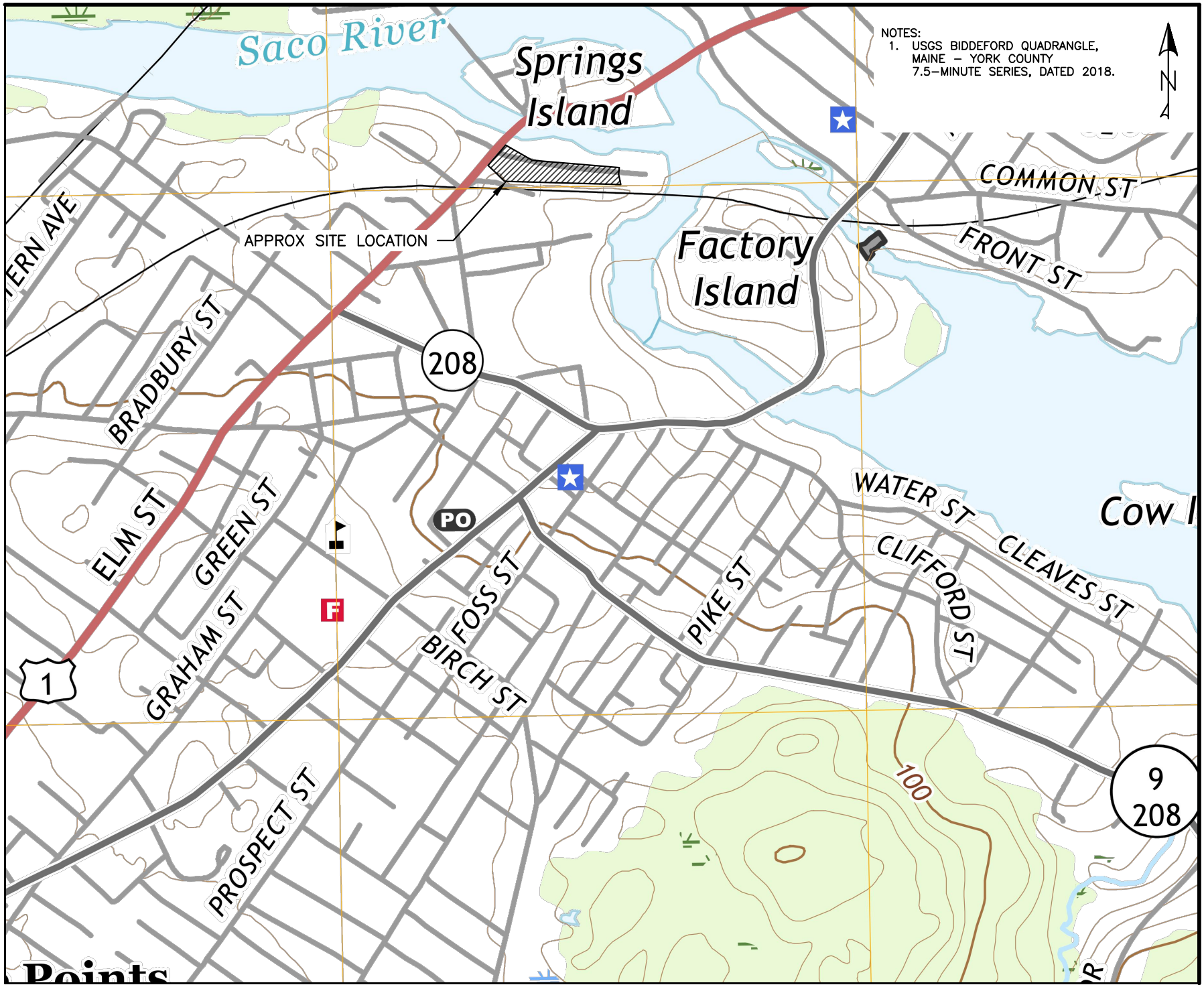

NOTES:
1. USGS BIDDEFORD QUADRANGLE, MAINE – YORK COUNTY 7.5–MINUTE SERIES, DATED 2018.

ISSUED FOR	BY DATE
CITY REVIEW	PFH 2/10/2021

DRAWING NAME: VICINITY MAP

PROJECT NAME: 1 GOOCH STREET REDEVELOPMENT

CLIENT: TOM WATSON & CO.

ACORN ENGINEERING, INC

ACORN ENGINEERING, INC. P.O. BOX 3372 PORTLAND, MAINE 04104 (207) 775-2655

FILE:	1093.10_CIVIL
DATE:	1/28/2021
JN:	1093.10
SCALE:	1" : 800'
DESIGN BY:	PFH
DRAWN BY:	ZMS
CHECKED BY:	WHS

THIS PLAN SHALL NOT BE MODIFIED WITHOUT WRITTEN PERMISSION FROM ACORN ENGINEERING, INC. ANY ALTERATIONS, AUTHORIZED OR OTHERWISE, SHALL BE AT THE USER'S SOLE RISK AND WITHOUT LIABILITY TO ACORN ENGINEERING, INC.

DRAWING NO.
VICINITY

LDR Attachment A FEES AND CHARGES

1. Zoning Ordinance.

A. Copies of the Zoning Ordinance shall be available from the City Clerk's office. The cost of this ordinance shall be $50, which shall include any amendments made to the ordinance to date. "To date," means the date of purchase.

B. (Reserved)

2. Zoning Map.

A. Blueprint copies of the Zoning Map (one inch equals 1,000 feet) shall be obtained from the City's Engineering Office. The cost for the map shall be $15.

B. Colored copies of the Zoning Map (one inch equals 1,000 feet) shall be obtained from the City's Engineering Offices. The cost for the map shall be $35.

C. Black-and-white copies of the reduced map (11 inches by 17 inches) shall be obtained from the Building Inspector's office. Cost for these maps shall be $1 each.

D. Colored copies of the reduced map (11 inches by 17 inches) shall be obtained from the City's Engineering Office. Cost for these maps shall be $5 each.

E. Colored copies of the reduced map (24 inches by 36 inches) shall be obtained from the City's Engineering Office. Cost for these maps shall be $15 each.

F. Fees collected for all color copies of the Zoning Map shall be used to further develop the City's geographical information system.

3. Engineering review and inspection draw accounts.

A. A draw account shall be set up for engineering review costs for all projects. The engineering review amount is due at the conceptual review stage. The minimum deposit is based on the following spreadsheet. If a project's costs exceed the minimum amounts shown, the applicant shall be required to submit additional funds to cover the review costs.

Schedule for Engineering Review Draw Accounts

Project Types	Minimum Deposit
Private ways (based on number of lots serviced, with no subdivision involved)	
1 lot	$~~400~~600
2 lots	$~~500~~750
3 to 4 lots	$~~1,000~~1,500

DRAFT

5 to 10 lots	$~~1,500~~2,250
More than 10 lots, per lot	+$1~~00~~50
Minor subdivisions	$~~500~~750
Major subdivisions:	
Fewer than 5 lots	$~~1,000~~1,500
5 to 10 lots	$~~1,500~~2,250
11 to 15 lots	$~~2,000~~3,000
16 to 25 lots	$~~2,500~~3,750
More than 25 lots	$~~3,000~~4,500
Amendments to subdivisions:	
Minor	$~~500~~750
Major	$~~750~~1,125
Site plan review (based on square feet of new footprint of structures and parking/ paving):	
Less than 2,000 square feet	$~~500~~750
2,000 to 9,999 square feet	$~~1,000~~1,500
10,000 to 19,999 square feet	$~~1,200~~1,800
20,000 to 39,999 square feet	$~~1,600~~2,400
40,000 to 59,999 square feet	$~~2,000~~3,000
More than 59,999 square feet	$~~3,000~~4,500
Amendments to approved site plans (no parking/paving) increase in square feet of footprint of structure and	$~~500~~750
Extraction Review	$~~1,000~~1,500
Conditional Use Permits	$~~500~~750
Miscellaneous Review	$~~400~~600

B. A draw account shall be set up for engineering inspection costs for all applicable projects. The amount is due before fi project approval. The minimum deposit is based on the following spreadsheet. If a project's costs exceed the minimum amounts shown, the applicant shall be required to submit additional funds to cover the inspection costs, and occupancy permits may be withheld until these additional fees funds are paid.

Schedule for Engineering Inspection Draw Account Project Types

Project Types	**Minimum Deposit**
Private ways (based on number of lots serviced, with no subdivision involved)	
1 lot	$~~500~~750
2 lots	$~~750~~1,125

3 to 4 lots	$~~1,000~~1,500
5 to 10 lots	$~~1,500~~2,250
More than 10 lots, per lot	+$~~100~~150
Subdivisions:	
Fewer than 5 lots	$~~2,000~~3,000
5 to 15 lots	$~~2,500~~3,750
More than 15 lots	$~~3,000~~4,500
Site plan review (based on square feet of new footprint of structures and parking/ paving):	
Less than 2,000 square feet	$~~500~~750
2,000 to 9,999 square feet	$~~1,000~~1,500
10,000 to 39,999 square feet	$~~1,500~~2,250
40,000 to 79,999 square feet	$~~2,000~~3,000
More than 80,000 square feet	$~~3,000~~4,500
Miscellaneous inspection	$~~400~~600

C. At the end of the review process, any remaining funds shall be returned to the applicant. The City of Biddeford will have 45 days from the date of the notice of decision for review draw accounts to process and forward the remaining funds to the applicant. For inspection draw accounts, the City of Biddeford shall have 45 days from when the engineering department submits its final report approving the project.

4. Subdivision review.

A. Charges for subdivision review are nonrefundable. The fees shall be as follows:

1. Minor subdivisions.

a. No more than four lots;

b. All lots having required street frontage on existing accepted streets or roads.

(1) $~~500 plus $100~~ 300 per lot or dwelling unit (40% is due at concept application submission, with the remaining 60% due at preliminary application submission); or

(2) $~~100~~ 300 per lot or dwelling unit amended for minor revisions to approved plans (100% due at time of application).

2. Major subdivisions.

a. Five or more lots; and/or

DRAFT

b. Construction of new street or roadway, either public or private;

c. Extension of water and sewer lines to service the several lots.

(1) $~~500 plus $100~~ 300 per lot or dwelling unit (40% is due at concept application submission, with the remaining 60% due at preliminary application submission);

(2) $~~500~~750 for final (100% due at time of final application); and/ or

(3) $~~100~~300 per lot or dwelling unit amended for minor revisions to approved plans (100% due at time of application).

3. These charges shall be paid at time of application. No project shall be presented to the Planning Board for preliminary approval without having paid these charges.

B. Further, in the event that a given project may require more detailed review and analysis, which would include any additional review of preliminary and final review of subdivision plans, excluding the concept, and initial preliminary and fi reviews, the Planning Board when determining the level of review needed, will require that a draw account be established to cover the additional costs.

1. The Board shall require an estimate of costs for review from the Planning Department and the City Engineer. This cost shall be based on the estimated amount of time needed to review the project and the hourly pay rate for the given department. Work orders for reviews shall be maintained by the Planning/Engineering departments and shall be made part of the project file.

2. A minimum of $~~1,500~~2,250 shall be deposited with the City through the Planning Department. This sum shall be deposited into a non- interest-bearing draw account. Once authorization is given from the Engineering Department in the form of an invoice, the Finance Department shall make drafts from the draw account, payable to the City of Biddeford. When this account is drawn down to a level of $500 or less, the applicant shall be required to deposit an additional $1,500.

3. At the end of the review process, any remaining funds shall be returned to the applicant. The City of Biddeford will have 45 days from the date of the notice of decision to process and forward the remaining draw account to the applicant.

C. All applications shall include a nonrefundable administrative fee of $~~20~~60 to be submitted at the time of application.

5. Site review.

A. Charges for site review such as for multifamily, commercial, industrial or nonprofit, and other development, are due at the time of application. No project shall be presented to the Planning Board for final approval without having paid these charges. All fees are nonrefundable and are as follows:

(1) Site plan review:

a. $~~250~~750 for up to ~~1~~9,999 square feet footprint of structures and paving/parking;

~~b. $500 for 2,000 to 9,999 square feet footprint of structures and paving/parking;~~

~~c.~~b. $~~1,000~~1,300 for 10,000 to 14,999 square feet footprint of structures and paving/parking;

~~d.~~c. $~~1,500~~2,000 for 15,000 to 19,999 square feet footprint of structures and paving/parking;

~~e.~~d. $~~2,000~~2,700 for 20,000 to 29,999 square feet footprint of structures and paving/parking;

~~f.~~e. For projects with more than 29,999 square feet footprint of structures and paving/parking, $~~2,000~~2,400 plus an additional $~~15~~20 for each additional 1,000 square feet footprint of structures and paving/parking (rounded to the nearest 1,000 square feet).

(2) Any conversion with no new construction: $~~100~~150.

B. All applications shall include a nonrefundable administrative fee of $~~40~~75 to be submitted at the time of application.

C. Further, in the event that a given project may require more detailed review and analysis, which would include any additional review of final review of site plans, excluding the pre-conference review, the Planning Board when determining the level of review needed, will require that a draw account be established to cover the additional costs.

1. The Board shall require an estimate of costs for review from the Planning Department and the City Engineer. This cost shall be based on the estimated amount of time needed to review the project and the hourly pay rate for the given department. Work orders for reviews shall be maintained by the Planning/Engineering Department shall be made part of the project file.
2. A minimum of $~~1,500~~2,250 shall be deposited with the City through the Planning Department. This sum shall be deposited into a non- interest-bearing draw account. Once authorization is given from the Engineering Department in the form of an invoice, the Finance Department shall make drafts from the draw account, payable to the City of Biddeford. When this account is drawn down to a level of $~~500~~750 or less, the applicant shall be required to deposit an additional $~~1,500~~2,250.
3. At the end of the review process, any remaining funds shall be returned to the applicant. The City of Biddeford will have 45 days from the date of the notice of decision to process and forward the remaining draw account to the applicant.

DRAFT

6. Conditional use.

A. Charges for these reviews shall be the same as either subdivision or site review. Basic application fee is $~~200~~300.

B. The applicant shall pay for legal expenses and engineering expenses incurred by the City in reviewing plans.

C. All applications shall include a nonrefundable administrative fee of $~~40~~75 to be submitted at the time of application.

7. Other reviews.

A. Any proposed amendments to the Zoning Ordinance or Zoning Map shall be charged a $~~1,000~~1,300 nonrefundable fee, plus the applicant shall pay for legal expenses and engineering expenses incurred by the City in reviewing plans.

~~B. Basic application fees for other reviews such as home occupations, private right-of-way, minor lot line revision, and change of use is $200.~~

~~C.~~B. All applications shall include a nonrefundable administrative fee of $~~40~~75 to be submitted at the time of application.

8. Contract and conditional zones.

A. $~~1,000~~1,300 per application (this includes contract and conditional zoning, and would not be proposed until passed the concept stage at Council).

B. The applicant shall pay for legal expenses and engineering expenses incurred by the City in reviewing plans, contract documents and developing the agreement.

C. All applications shall include a nonrefundable administrative fee of $~~40~~75 to be submitted at the time of application.

9. Administrative appeals and variance requests.

A. A fee of $~~50~~75 shall be charged to cover administrative costs for administrative appeals and variance requests. Such fee shall be paid by check to the City of Biddeford at time of application.

B. The applicant may be charged additional costs for photocopying and legal reviews. Such costs shall be substantiated by invoice from the legal fi involved or a listing of copies made (photocopying costs shall not exceed $~~50~~75).

C. Applicants shall pay for first class postage for notification of abutters. This cost shall be billed to the applicant prior to final approval of plans.

10. Shoreland Zoning review.

Review fee: $~~100~~300, due at time of application. All applications shall include a nonrefundable administrative fee of $~~40~~75 to be submitted at the time of application.

11. Extraction review.

A. Review fee: $~~100~~300, due at time of application. All applications shall include a nonrefundable administrative fee of $~~40~~75 to be submitted at the time of application.

B. Further, in the event that a given project may require more detailed review and analysis, the Planning Board when determining the level of review needed, will require that a draw account be established to cover the additional costs.

1. The Board shall require an estimate of costs for review from the Planning Department and the City Engineer. This cost shall be based on the estimated amount of time needed to review the project and the hourly pay rate for the given department. Work orders for reviews shall be maintained by the Planning/Engineering Departments and shall be made part of the project file.

2. A minimum of $~~1,500~~2,250 shall be deposited with the City through the Planning Department. This sum shall be deposited into a non- interest-bearing draw account. Once authorization is given from the Engineering Department in the form of an invoice, the Finance Department shall make drafts from the draw account, payable to the City of Biddeford. When this account is drawn down to a level of $~~500~~750 or less, the applicant shall be required to deposit an additional $~~1,500~~2,250.

3. At the end of the review process, any remaining funds shall be returned to the applicant. The City of Biddeford will have 45 days from the date of the notice of decision to process and forward the remaining draw account to the applicant.

12. Historic preservation certificate of appropriateness. [Added 4-16-2013 by Ord. No. 2013.25]

A. Commission review: application fee of $~~100~~200, plus administration fee of $~~40~~75.

B. Subcommittee review: ~~of minor~~ application fee of ~~s: no fee~~$50, with no administration fee.

DRAFT

CITY OF BIDDEFORD

Planning and Development Department

Greg D. Tansley, A.I.C.P.
City Planner
205 Main Street
P.O. Box 586
Biddeford, ME 04005
(207) 282-7119 or (207) 284-9115
Greg.Tansley@biddefordmaine.org

PLANNING BOARD REPORT

TO: William Southwick, Chair & Members of the Biddeford Planning Board

FROM: Greg Tansley, AICP, City Planner

DATE: February 26, 2021

RE: 2021.12 LDR A Fees and Charges Amendment Proposal

The last time we significantly reviewed our fee structure was 2005. Much has changed since then, not least of all being the work involved in reviewing and processing planning-related applications. In an attempt to ensure our fees are consistent with staff and administrative cost and time requirmeents, we present a proposed amendment to our fees.

The fee revision proposal is a result of three (3) considerations reviewed by staff. We considered:

- the fee rates charged by other similar municipalities, including Saco, Scarborough, South Portland, Brunswick, Kittery, and Westbrook;
- the inflation between January 2005 and January 2021 calculated at 37% according to https://www.bls.gov/data/inflation_calculator.htm; and
- estimated time and costs for Staff and consultants for projects over the past 4-5 years.
- the real costs of 3rd Party Engineering Review of projects and what we have been collecting in escrow fees (see Section 3 of the draft proposal).

We believe that the proposal before represents a fair and reasonable update to our fee schedule which has not been significantly altered in approximately 15 years. We ask the Planning Board to review the proposal, and when comfortable with it, schedule a Public Hearing to move this amendment to the next step in the process to move it to the City Council for its consideration.

SAMPLE MOTIONS:

Motion to schedule a public hearing for _____, 2021 for the fees and charges proposed by Staff.

ATTACHMENTS

1. Draft LDR A Fees and Charges Amendments w/ legislative edits.