City of Biddeford
City Council
September 20, 2022 6:00 PM Council Chambers and via Zoom
Please click this URL to join:
https://biddeford.zoom.us/j/93460896531?pwd=RlRkSGFTUldzTE9oRWQzUkxVMVg3dz09

Webinar ID: 934 6089 6531
Passcode: 613640

Or One tap mobile:
+16469313860,,93460896531# US
+13017158592,,93460896531# US (Washington DC)

Or join by phone:
Dial(for higher quality, dial a number based on your current location):
US: +1 646 931 3860 or +1 301 715 8592 or +1 309 205 3325

International numbers available: https://biddeford.zoom.us/u/acTacw8c2

Status: In-Person and via Zoom; Council Chambers; 6:00 p.m.
Zoom Meeting Link:

Please click this URL to join:
https://biddeford.zoom.us/j/93460896531?pwd=RlRkSGFTUldzTE9oRWQzUkxVMVg3dz09

Webinar ID: 934 6089 6531
Passcode: 613640

Or One tap mobile:
+16469313860,,93460896531# US
+13017158592,,93460896531# US (Washington DC)

Or join by phone:
Dial(for higher quality, dial a number based on your current location):
US: +1 646 931 3860 or +1 301 715 8592 or +1 309 205 3325

International numbers available: https://biddeford.zoom.us/u/acTacw8c2

1. **Roll Call**
2. **Pledge of Allegiance**
3. **Adjustment(s) to Agenda**

3.a. Add Order of the Day 2022.82

4. Presentations:

4.a. Update on Combined Sewer Operations (CSO) Projects

4.b. Update: Pearl Point Park Concept Plan
9-20-2022 Pearl Point Park Concept Plan-MEMO.docx
9-20-2022 Pearl Point Park Concept - MAP.pdf

5. Public Hearing

5.a. State Liquor License: Coletti's Pizza Factory (497 Elm Street)

6. Liquor License Consideration

6.a. Coletti's Pizza Factory (497 Elm Street)
9-20-2022 Colettis Pizza Factory Liquor License App.pdf

Public Addressing the Council...(3 minute limit per speaker for up to a total of 15 minutes)

7. Consideration of Minutes:

7.a. September 6, 2022 Council Meeting Minutes
9-06-2022 Council Meeting Minutes.docx

8. Second Reading: (Public Comment - 3 minute limit)

8.a. 2022.72) Amendment/Land Development Regulations/Density Bonus
9-06-2022 LDR Bonus Density Amendments-ORDER.pdf
9-06-2022 Density Bonus Ordinance Amendments-MEMO.pdf

9. Orders of the Day: (Public Comment - 3 minute limit)

9.a. 2022.78) Authorization/Purchase of Fire Department Command Vehicle/Bill Dodge Buick GMC
9-20-2022 Fire Command Vehicle-ORDER.docx
9-20-2022 Fire Command Vehicle-MEMO.docx
9-20-2022 Fire Command Vehicle-Chief Letter.docx

9.b. 2022.79) Authorization/Purchase of Snow Removal Equipment for Biddeford Municipal Airport/United Construction & Forestry
9-20-2022 Airport SRE-Loader-Blower-ORDER.docx
9-20-2022 Airport SRE-Loader-Blower-MEMO.docx
9-20-2022 Airport SRE-Loader-Blower-John Deere Quote.pdf
9-20-2022 Airport SRE-Loader-Blower-Case Construction Quote.PDF

9.c. 2022.80) Approval/Transfer of Funds to Police Department/Substantial Contribution in an Investigation/Crimial Case
9-20-2022 PD Transfer of Funds-ORDER.doc
9-20-2022 PD Transfer of Funds-MEMO.docx

9.d. 2022.81) Amendment/Ch. 2, Administration, Section 2-2. Election Wards/Reapportionment of City Wards
9-20-2022 Re-districting of Wards- ORDER.doc
9-20-2022 Reapportionment of Wards-MEMO.pdf
Proposed Changes by Street.docx
9-20-2022 Reapportionment of Wards-MAP.pdf

9-20-2022 Reapportionment of Wards-State Law.pdf

9.e. 2022.82) Approval/Purchase of 2022 John Deere Grader with Snow Plow Wing and Winter Tires/United Construction

9-20-2022 Grader Purchase-John Deere-ORDER.docx

9-20-2022 Grader Purchase-John Deere-MEMO.docx

9-20-2022 Grader Purchase-backup docs.pdf

10. Appointments: (No Public Comment)

10.a. Israa Enan...Recycling & Waste Management Commission

9-20-2022 Appt-Enan-RSWC.docx

9-20-2022 Committee App-Enan-RSWC.pdf

10.b William Stepchew...Shellfish Conservation Committee

9-20-2022 Appt-Stepchew-Shellfish Comm.docx

9-20-2022 Committee App-Stepchew-Shellfish Comm.pdf

11. City Manager Report: (James Bennett)

12. Other Business: (Councilors' Comments; Updates; Announcements)

13. Public Addressing the Council..(3 minute limit per speaker)

14. Council President Addressing the Council: (Councilor Norman Belanger)

15. Mayor Addressing the Council: (Mayor Alan Casavant)

16. Adjourn

City Council

Meeting Date: September 20, 2022
Meeting Time: 6:00 p.m.

Agenda Item No: Presentation: 4.b
Item Description: Pearl Point Park Concept Plan

Submitted by: Brad Favreau, Economic Development Coordinator

Supporting Information/Documentation:

Enlarged Concept Plan

Key Terms:

N/A

Executive Summary:

The land between the former MERC stack and the Saco River has been considered for new park space, to serve, in part, as a link along the expanding Riverwalk. After a comprehensive public engagement process, the landscape architecture firm, Richardson & Associates of Saco, has developed a concept plan that incorporates the features and attributes favored by the public and has developed the attached Concept Master Plan.

Detailed Review:

The site is part of the former Maine Energy Recovery Company facility location. Because of the environmental remediation "cap" on site, uses of this parcel are limited. In early 2020, City Council approved a contract in the amount of $15,000, between the City and Richardson & Associates to develop a design for new park space for this site. The Downtown Development Commission facilitated the process, from initial design charrette, through final concept plan.

In October of 2020 Todd Richardson presented a design charrette on site. Approximately 40 persons attended. Richardson presented three initial options, explaining the attributes and intention of each, and asked attendees to rank each option. One version emerged a favorite by attendees.

With the use of an on-site survey at the charrette, and a later public survey designed and distributed by the DDC, the chosen design was refined into the final concept plan presented here.

This concept plan offers a balance between hardscaping and open green space, a link for the expanding Riverwalk, informal performance space, a river overlook pavilion, and space to exhibit public art. The design also provides a landing for a future pedestrian bridge.

Restrooms, an amenity favored by the public, is shown on the plan either free-standing, or incorporated into upcoming private redevelopment of the adjacent parcel. The option of including restrooms in a private building is no longer an alternative.

The former MERC stack will remain pending further action by City Council.

Funding Source:

TBD

Staff Recommendation:

The design of this plan is the result of a year-long public engagement process. It garnered almost 500 responses from residents, whether at the initial charrette, in DDC meetings, or from a subsequent survey. This concept plan as conceived, will require refinement and alterations as construction plans are developed. But this plan offers a welcome green hub, for the Riverwalk, for Pearl Street corridor, and as possible access to the Saco Transportation Center. Funding for further development of this plan might be found through exploring Federal and State resources. Staff recommends approval of this concept design for a new park at the terminal of Pearl Street.

Public Restroom Facility
Service Vehicle Access
Public Restroom Facility Alt.
(Requires Public/ Private Agreement
Future Private Development
Property Line
Under Pass
(Future River Walk)
Subsurface Storm Water Treatment System (Approximate)
(ACF Environmental)
Extent of VRAP (Approximate)
Open Lawn Area
Naturalized Planting
Future Pedestrian Bridge
Cell Phone Tower
Bike Racks
Central Lawn Area
River Side Open Space
Picnic Table Area
Mid Development Connector (By Others)
Art Wall
Art Wall/ Performance Space
Views Across River
Views Down River
Viewing at he Edge of the Saco River
Overlook
Central Gathering/ Pavilion Space
Saco River Pavilion
Drop-Off/ Arrival
Pearl Street
Saco River
Parking Lot (By Others)
River Dam
Future River Walk Connection
MN
TN
W
E
S
0'
16'
32'
48'
64'
Richardson & Associates, Landscape Architects/ 11 middle street, saco, me 04072/t. 207.286.9291
Hybrid Master Plan_Bridge _ Straight
Pearl Point Park
Biddeford, ME
MPI
Scale: 1/16" = 1'-0"
Original Drawing Size: 24"x36"
Original Issue Date: 12/14/2020
Revision Date:

New liquor license

pd $160.00 8/29/2022

For New Businesses and Businesses with Liquor Licenses: Please be sure to contact the Code Enforcement Office to schedule an inspection (207) 284-9236

City of Biddeford

BUSINESS LICENSE APPLICATION

BUSINESS NAME: COLETTI'S PIZZA FACTORY

Business Address: 497 ELM ST BIDDEFORD **Map** _____ **Lot** _____

Mailing Address: 497 ELM ST BIDDEFORD ME 04005

Business Telephone Number: 207 5714476

Email Address: CHECCO34@GMAIL.COM

OWNER/OPERATOR: _____

Home Physical Address: 120 JORNAT DRIVE CORNISH ME 04020

Home Mailing Address: SAME

Home Telephone Number: 2072191939

Applicant(s) Date of Birth: 07-19-1975

Applicant's Signature 8-9-22 **Date**

Any information provided in this application, which is found to be false, will result in the denial or revocation of this license – per 1 M.R.S.A. 17-A §453.

TYPES OF ENTERTAINMENT: **$150.00 (single/multiple events)**

- ❑ Concert
- ❑ Exhibitions (live performances)
- ❑ Circus/Carnival
- ❑ Playhouse/Play

$150.00 (annual)

- ❑ Indoor Skating Rink
- ❑ Bowling Lanes
- ❑ Theater/Movie House (plus $25.00 per screen)
- ❑ Billiard Room(s)
- ❑ Public Firing Range
- ❑ Bottle Club

AUTOMOBILE REPAIR AND/OR GRAVEYARD:

- ❑ Automobile Repair Garage for maintenance **$75.00**
- ❑ Automobile Graveyard **$200.00**

PLACES/DEALERS IN PRODUCTS: **$200.00**

- ❑ Secondhand Dealers
- ❑ Dealers in gold jewelry, etc.
- ❑ Antique Dealer
- ❑ Flea Market (for 20 tables; $5 per add'l table)
- ❑ Junk Dealer/Recycling

STATE OF MAINE
DEPARTMENT OF ADMINISTRATIVE AND FINANCIAL SERVICES
BUREAU OF ALCOHOLIC BEVERAGES AND LOTTERY OPERATIONS
DIVISION OF LIQUOR LICENSING AND ENFORCEMENT

Division Use Only
License No:
Class: By:
Deposit Date:
Amt. Deposited:
Payment Type:
OK with SOS: Yes ☐ No ☐

Application for an On-Premises License

All Questions Must Be Answered Completely. Please print legibly.

Section I: Licensee/Applicant(s) Information; Type of License and Status

Legal Business Entity Applicant Name (corporation, LLC): COLETTIS PIZZA FACTORY	Business Name (D/B/A): COLETTIS PIZZA FACTORY
Individual or Sole Proprietor Applicant Name(s): FRANCESCO COLETTI	Physical Location:
Individual or Sole Proprietor Applicant Name(s):	Mailing address, if different:
Mailing address, if different from DBA address: 497 ELM ST BIDDEFORD ME 04005	Email Address: CHECC034@GMAIL.COM.
Telephone # Fax #: 2075714476 CELL 2072191939	Business Telephone # Fax #: 2075714476
Federal Tax Identification Number: 813000275	Maine Seller Certificate # or Sales Tax #: 1181124
Retail Beverage Alcohol Dealers Permit:	Website address:

1. New license or renewal of existing license? ☑ New Expected Start date: ASAP
   ☐ Renewal Expiration Date: _____

2. The dollar amount of gross income for the licensure period that will end on the expiration date above:

   Food: _____ Beer, Wine or Spirits: _____ Guest Rooms: _____

3. Please indicate the type of alcoholic beverage to be sold: (check all that apply)

   ☑ Malt Liquor (beer) ☑ Wine ☐ Spirits

4. Indicate the type of license applying for: (choose only one)

☑ Restaurant (Class I, II, III, IV)	☐ Class A Restaurant/Lounge (Class XI)	☐ Class A Lounge (Class X)
☐ Hotel (Class I, II, III, IV)	☐ Hotel – Food Optional (Class I-A)	☐ Bed & Breakfast (Class V)
☐ Golf Course (included optional licenses, please check if apply) (Class I, II, III, IV)	☐ Auxiliary	☐ Mobile Cart
☐ Tavern (Class IV)	☐ Other: _____	
☐ Qualified Caterer	☐ Self-Sponsored Events (Qualified Caterers Only)	

Refer to Section V for the License Fee Schedule on page 9

5. Business records are located at the following address:

_____

6. Is the licensee/applicant(s) citizens of the United States? ☑ Yes ☐ No

7. Is the licensee/applicant(s) a resident of the State of Maine? ☑ Yes ☐ No

NOTE: Applicants that are not citizens of the United States are required to file for the license as a business entity.

8. Is licensee/applicant(s) a business entity like a corporation or limited liability company?

☐ Yes ☑ No If **Yes**, complete Section VII at the end of this application

9. For a licensee/applicant who is a business entity as noted in Section I, does any officer, director, member, manager, shareholder or partner have in any way an interest, directly or indirectly, in their capacity in any other business entity which is a holder of a wholesaler license granted by the State of Maine?

☐ Yes ☑ No

☑ Not applicable – licensee/applicant(s) is a sole proprietor

10. Is the licensee or applicant for a license receiving, directly or indirectly, any money, credit, thing of value, endorsement of commercial paper, guarantee of credit or financial assistance of any sort from any person or entity within or without the State, if the person or entity is engaged, directly or indirectly, in the manufacture, distribution, wholesale sale, storage or transportation of liquor.

☐ Yes ☑ No

If yes, please provide details: _____

_____

11. Do you own or have any interest in any another Maine Liquor License? ☐ Yes ☑ No

If yes, please list license number, business name, and complete physical location address: (attach additional pages as needed using the same format)

Name of Business	License Number	Complete Physical Address

12. List name, date of birth, place of birth for all applicants including any manager(s) employed by the licensee/applicant. Provide maiden name, if married. (attach additional pages as needed using the same format)

Full Name	DOB	Place of Birth
FRANCESCO COLETTI	7-19-1975	NAPLES ITALY

Residence address on all the above for previous 5 years

Name Address: 120 JORNAT DRIVE CORNISH ME 04020

Name Address:

Name Address:

Name Address:

13. Will any law enforcement officer directly benefit financially from this license, if issued?

☐ Yes ☑ No

If **Yes**, provide name of law enforcement officer and department where employed:

_____

14. Has the licensee/applicant(s) ever been convicted of any violation of the liquor laws in Maine or any State of the United States? ☐ Yes ☑ No

If Yes, please provide the following information and attach additional pages as needed using the same format.

Name: _____ Date of Conviction: _____

Offense: _____ Location: _____

Disposition: _____

15. Has the licensee/applicant(s) ever been convicted of any violation of any law, other than minor traffic violations, in Maine or any State of the United States? ☐ Yes ☑ No

If Yes, please provide the following information and attach additional pages as needed using the same format.

Name: _____ Date of Conviction: _____

Offense: _____ Location: _____

Disposition: _____

16. Has the licensee/applicant(s) formerly held a Maine liquor license? ☐ Yes ☑ No

17. Does the licensee/applicant(s) own the premises? ☐ Yes ☑ No

If No, please provide the name and address of the owner:

PETER MOURMORAS 281 POOL ST BIDD ME 04005

18. If you are applying for a liquor license for a Hotel or Bed & Breakfast, please provide the number of guest rooms available: n/a

19. Please describe in detail the area(s) within the premises to be licensed. This description is in addition to the diagram in Section VI. (Use additional pages as needed)

20. What is the distance from the premises to the **nearest** school, school dormitory, church, chapel or parish house, measured from the main entrance of the premises to the main entrance of the school, school dormitory, church, chapel or parish house by the ordinary course of travel?

Name: JFK School

Distance: approx. 1.5 mile

Section II: Signature of Applicant(s)

By signing this application, the licensee/applicant understands that false statements made on this application are punishable by law. Knowingly supplying false information on this application is a Class D Offense under Maine's Criminal Code, punishable by confinement of up to one year, or by monetary fine of up to $2,000 or by both.

Please sign and date in blue ink.

Dated: 8-28-22

Signature of Duly Authorized Person

Signature of Duly Authorized Person

FRANCESCO COLETTI

Printed Name Duly Authorized Person

Printed Name of Duly Authorized Person

Section III: For use by Municipal Officers and County Commissioners only

The undersigned hereby certifies that we have complied with the process outlined in 28-A M.R.S. §653 and approve this on-premises liquor license application.

Dated: _____

Who is approving this application? ☐ Municipal Officers of _____

☐ County Commissioners of _____ County

☐ **Please Note:** The Municipal Officers or County Commissioners must confirm that the records of Local Option Votes have been verified that allows this type of establishment to be licensed by the Bureau for the type of alcohol to be sold for the appropriate days of the week. Please check this box to indicate this verification was completed.

Signature of Officials	Printed Name and Title

This Application will Expire 60 Days from the date of Municipal or County Approval unless submitted to the Bureau

Included below is the section of Maine's liquor laws regarding the approval process by the municipalities or the county commissioners. This is provided as a courtesy only and may not reflect the law in effect at the time of application. Please see http://www.mainelegislature.org/legis/statutes/28-A/title28-Asec653.html

§653. Hearings; bureau review; appeal

1. Hearings. The municipal officers or, in the case of unincorporated places, the county commissioners of the county in which the unincorporated place is located, may hold a public hearing for the consideration of applications for new on-premises licenses and applications for transfer of location of existing on-premises licenses. The municipal officers or county commissioners may hold a public hearing for the consideration of requests for renewal of licenses, except that when an applicant has held a license for the prior 5 years and a complaint has not been filed against the applicant within that time, the applicant may request a waiver of the hearing.

A. The bureau shall prepare and supply application forms.

B. The municipal officers or the county commissioners, as the case may be, shall provide public notice of any hearing held under this section by causing a notice, at the applicant's prepaid expense, stating the name and place of hearing, to appear on at least 3 consecutive days before the date of hearing in a daily newspaper having general circulation in the municipality where the premises are located or one week before the date of the hearing in a weekly newspaper having general circulation in the municipality where the premises are located.

C. If the municipal officers or the county commissioners, as the case may be, fail to take final action on an application for a new on-premises license or transfer of the location of an existing on-premises license within 60 days of the filing of an application, the application is deemed approved and ready for action by the bureau. For purposes of this paragraph, the date of filing of the application is the date the application is received by the municipal officers or county commissioners. This paragraph applies to all applications pending before municipal officers or county commissioners as of the effective date of this paragraph as well as all applications filed on or after the effective date of this paragraph. This paragraph applies to an existing on-premises license that has been extended pending renewal. The municipal officers or the county commissioners shall take final action on an on-premises license that has been extended pending renewal within 120 days of the filing of the application.

D. If an application is approved by the municipal officers or the county commissioners but the bureau finds, after inspection of the premises and the records of the applicant, that the applicant does not qualify for the class of license applied for, the bureau shall notify the applicant of that fact in writing. The bureau shall give the applicant 30 days to file an amended application for the appropriate class of license, accompanied by any additional license fee, with the municipal officers or county commissioners, as the case may be. If the applicant fails to file an amended application within 30 days, the original application must be denied by the bureau. The bureau shall notify the applicant in writing of its decision to deny the application including the reasons for the denial and the rights of appeal of the applicant.

2. Findings. In granting or denying an application, the municipal officers or the county commissioners shall indicate the reasons for their decision and provide a copy to the applicant. A license may be denied on one or more of the following grounds:

A. Conviction of the applicant of any Class A, Class B or Class C crime;

B. Noncompliance of the licensed premises or its use with any local zoning ordinance or other land use ordinance not directly related to liquor control;

C. Conditions of record such as waste disposal violations, health or safety violations or repeated parking or traffic violations on or in the vicinity of the licensed premises and caused by persons patronizing or employed by the licensed premises or other such conditions caused by persons patronizing or employed by the licensed premises that unreasonably disturb, interfere with or affect the ability of persons or businesses residing or located in the vicinity of the licensed premises to use their property in a reasonable manner;

D. Repeated incidents of record of breaches of the peace, disorderly conduct, vandalism or other violations of law on or in the vicinity of the licensed premises and caused by persons patronizing or employed by the licensed premises;

D-1. Failure to obtain, or comply with the provisions of, a permit for music, dancing or entertainment required by a municipality or, in the case of an unincorporated place, the county commissioners;

E. A violation of any provision of this Title;

F. A determination by the municipal officers or county commissioners that the purpose of the application is to circumvent the provisions of section 601; and

G. After September 1, 2010, server training, in a program certified by the bureau and required by local ordinance, has not been completed by individuals who serve alcoholic beverages.

3. Appeal to bureau. Any applicant aggrieved by the decision of the municipal officers or county commissioners under this section may appeal to the bureau within 15 days of the receipt of the written decision of the municipal officers or county commissioners. The bureau shall hold a public hearing in the city, town or unincorporated place where the premises are situated. In acting on such an appeal, the bureau may consider all licensure requirements and findings referred to in subsection 2.

A. Repealed

B. If the decision appealed from is an application denial, the bureau may issue the license only if it finds by clear and convincing evidence that the decision was without justifiable cause.

4. Repealed

5. Appeal to District Court. Any person or governmental entity aggrieved by a bureau decision under this section may appeal the decision to the District Court within 30 days of receipt of the written decision of the bureau.

An applicant who files an appeal or who has an appeal pending shall pay the annual license fee the applicant would otherwise pay. Upon resolution of the appeal, if an applicant's license renewal is denied, the bureau shall refund the applicant the prorated amount of the unused license fee.

Section IV: Terms and Conditions of Licensure as an Establishment that sells liquor for on-premises consumption in Maine

- The licensee/applicant(s) agrees to be bound by and comply with the laws, rules and instructions promulgated by the Bureau.
- The licensee/applicant(s) agrees to maintain accurate records related to an on-premise license as required by the law, rules and instructions promulgated or issued by the Bureau if a license is issued as a result of this application.
    - The licensee/applicant(s) authorizes the Bureau to obtain and examine all books, records and tax returns pertaining to the business, for which this liquor license is requested, and also any books, records and returns during the year in which any liquor license is in effect.
- Any change in the licensee's/applicant's licensed premises as defined in this application must be approved by the Bureau in advance.
- All new applicants must apply to the Alcohol and Tobacco Tax and Trade Bureau (TTB) for its Retail Beverage Alcohol Dealers permit. See the TTB's website at https://www.ttb.gov/nrc/retail-beverage-alcohol-dealers for more information.

Section V: Fee Schedule

Filing fee required. In addition to the license fees listed below, a filing fee of $10.00 must be included with all applications.

Please note: For Licensees/Applicants in unorganized territories in Maine, the $10.00 filing fee must be paid directly to County Treasurer. All applications received by the Bureau from licensees/applicants in unorganized territories must submit proof of payment was made to the County Treasurer together with the application.

Class of License	Type of liquor/Establishments included	Fee
Class I	**For the sale of liquor (malt liquor, wine and spirits)**	$ 900.00
	This class includes: Airlines; Civic Auditoriums; Class A Restaurants: Clubs with catering privileges; Dining Cars; Golf Courses; Hotels; Indoor Ice-Skating Clubs; Indoor Tennis Clubs; Vessels; Qualified Caterers	
Class I-A	**For the sale of liquor (malt liquor, wine and spirits)**	$1,100.00
	This class includes only hotels that do not serve three meals a day.	
Class II	**For the Sale of Spirits Only**	$ 550.00
	This class includes: Airlines; Civic Auditoriums; Class A Restaurants; Clubs with catering privileges; Dining Cars; Golf Courses; Hotels; Indoor Ice-Skating Clubs; Indoor Tennis Clubs; and Vessels.	
Class III	**For the Sale of Wine Only**	$ 220.00
	This class includes: Airlines; Civic Auditoriums; Class A Restaurants; Clubs with catering privileges; Dining Cars; Golf Courses; Hotels; Indoor Ice-Skating Clubs; Indoor Tennis Clubs; Restaurants; Vessels; Pool Halls; and Bed and Breakfasts.	
Class IV	**For the Sale of Malt Liquor Only**	$ 220.00
	This class includes: Airlines; Civic Auditoriums; Class A Restaurants; Clubs with catering privileges; Dining Cars; Golf Courses; Hotels; Indoor Ice-Skating Clubs; Indoor Tennis Clubs; Restaurants; Taverns; Pool Halls; and Bed and Breakfasts.	
Class III and IV	**For the Sale of Malt Liquor and Wine Only**	$ 440.00
	This class includes: Airlines; Civic Auditoriums; Class A Restaurants; Clubs with catering privileges; Dining Cars; Golf Courses; Hotels; Indoor Ice-Skating Clubs; Indoor Tennis Clubs; Restaurants; Vessels; Pool Halls; and Bed and Breakfasts.	
Class V	**For the sale of liquor (malt liquor, wine and spirits)**	$ 495.00
	This class includes only a Club without catering privileges.	
Class X	**For the sale of liquor (malt liquor, wine and spirits)**	$2,200.00
	This class includes only a Class A Lounge	
Class XI	**For the sale of liquor (malt liquor, wine and spirits)**	$1,500.00
	This class includes only a Restaurant Lounge	

Section VI Premises Floor Plan

In an effort to clearly define your license premise and the areas that consumption and storage of liquor authorized by your license type is allowed, the Bureau requires all applications to include a diagram of the premise to be licensed.

Diagrams should be submitted on this form and should be as accurate as possible. Be sure to label the following areas: entrances, office area, coolers, storage areas, display cases, shelves, restroom, point of sale area, area for on-premise consumption, dining rooms, event/function rooms, lounges, outside area/decks or any other areas on the premise that you are requesting approval. Attached an additional page as needed to fully describe the premise.

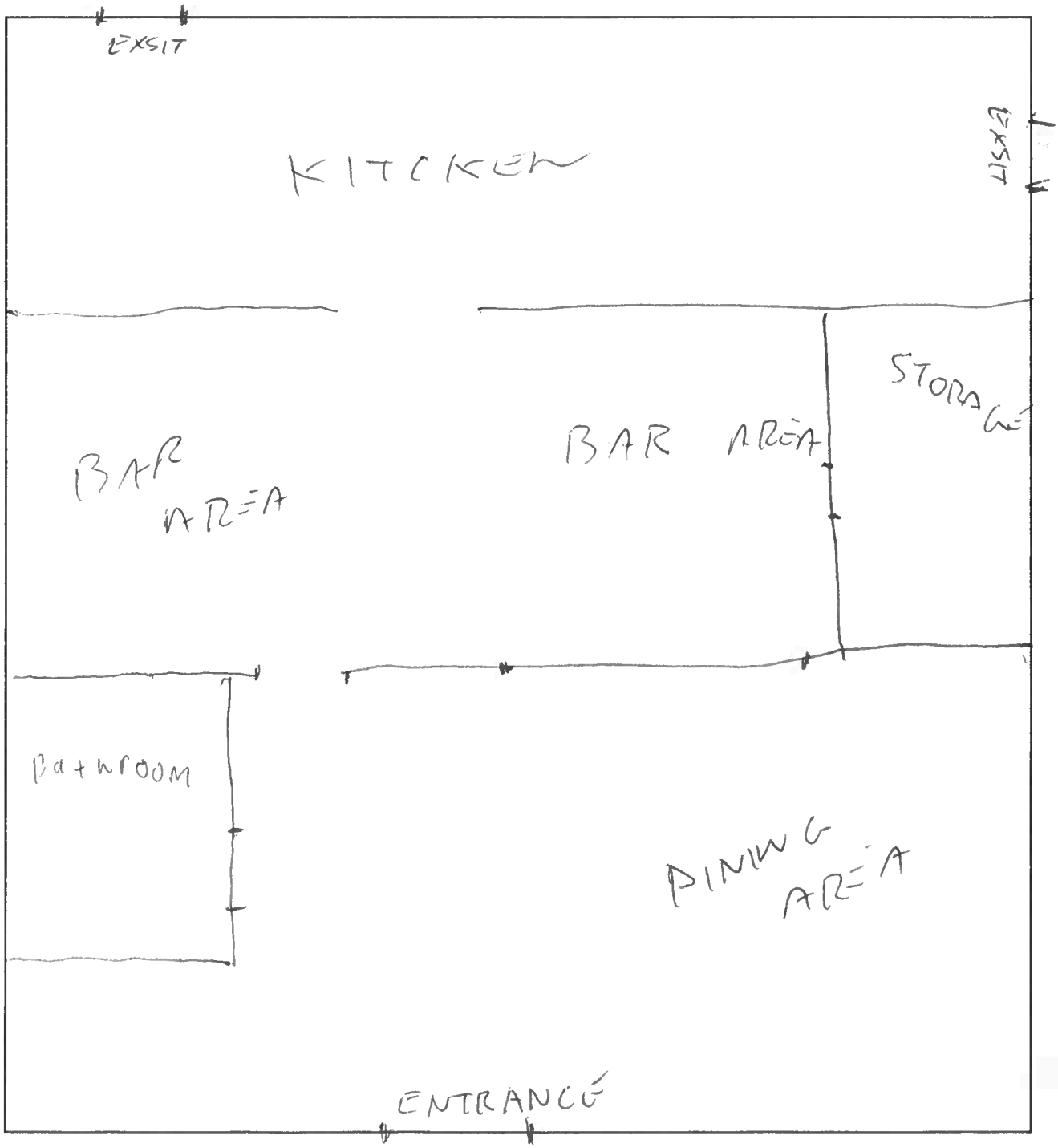

COUNCIL MEETING
SEPTEMBER 6, 2022
NOTE: Due to COVID-19, this meeting was held in-person in the Council Chambers, as well as virtually (via ZOOM),

Mayor Casavant called the meeting to order at 6:01 p.m.

Roll Call: William Emhiser, Scott Whiting, Martin Grohman, Bobby Mills, Norman Belanger, Liam LaFountain, Doris Ortiz, Marc Lessard

Amy Clearwater was excused.

The Council and all who were present recited the Pledge of Allegiance.

Adjustments to the Agenda:
- Remove Order of the Day 2022.73
- Add Order of the Day 2022.76

Swearing-In: ***Deputy Fire Chief, Kenneth Thorpe***
City Clerk Carmen Bernier administered the Oath, after which Deputy Thorpe's wife pinned him. Mayor Casavant offered words of gratitude to all the Fire Department personnel and their families for all their support and sacrifice.

Public Addressing the Council..(3 minute limit per speaker for up to 15 minutes):
One citizen shared his idea of promoting the bicycling culture in Biddeford.

Consideration of Minutes: **August 16, 2022**
Motion by Councilor Belanger, seconded by Councilor Mills to accept the minutes as printed.
Vote: Unanimous.

Orders of the Day:
2022.72 **IN BOARD OF CITY COUNCIL..SEPTEMBER 6, 2022**
BE IT ORDAINED by the City Council of Biddeford, Maine to amend the Code of Ordinances of the City of Biddeford as follows:

Part III (Land Development Regulations), Article V (Establishment of Zones), Section 2 (General description of zones and allowed uses):

B. In order to promote condominium forms of housing and affordable housing in close proximity to downtown and services, in the R-1-A, R-1-B, R-2, R-3, OR, and MSRD-2 Zoning Districts the density requirements may be relaxed as follows:

1. Redevelopment of existing structures:

a. The Planning Board, or other appropriate approval authority, shall consider granting a density bonus of one residential unit for every 650 square feet of living space within an existing structure, provided the applicant present redevelopment/renovation plans to the Code Enforcement Officer demonstrating how the redevelopment project will satisfy life/safety codes and result in the number of residential units with two or more bedrooms being at least, if not more than, the number of units with two or more bedrooms before the density bonus was granted.

b. If the project is provided a density bonus, the Code Enforcement Officer shall document the allowable density and number of units, in writing, for the Code Enforcement Office files.

c. An applicant ~~provided a density bonus for rental housing~~ shall enter into a 20-year contractual agreement with the City of Biddeford requiring that at least thirty percent (30%) of the additional units being created, with the minimum being one unit, ~~shall~~ be leased to households earning no more than 80% of the area median income (AMI) ~~such that they do~~ at a rate not to exceed ~~80% of~~ the Fair Market Rent (FMR) per bedroom size, as ~~established annually~~ published by the ~~U.S. Department of Housing and Urban Development (HUD~~) Biddeford Housing Authority. The contractual agreement shall be signed by the applicant, a copy of which shall be provided to the Code Enforcement Office prior to the issuance of any building permits. Prior to receiving a Certificate of Occupancy, the applicant shall record~~ed~~ the agreement at the York County Registry of Deeds, a copy of which shall be provided to the Code Enforcement Office and Planning and Development Department.~~, prior to the issuance of any building permits.~~ Rent restricted units will be annually monitored by the Planning and Development Department for contract compliance.

2. Condominium conversions/development:

a. A property may be proposed for redevelopment/renovation from apartments into condominiums in accordance with 1. above.

b. An applicant provided a density bonus for condominiums shall enter into a contractual agreement with the City of
Biddeford obligating them to complete the project as condominiums to be offered for sale upon or before completion of the project in return for receiving the density bonus. The contractual agreement shall be recorded at the York County Registry of Deeds, a copy of which provided to the Code Enforcement Office, prior to the issuance of any building permits.

c. The applicant agrees that if the project is converted to condominiums said units shall not be sold for a price that exceeds 125% of the York County median home price affordable to median income households as set annually by HUD for the City of Biddeford.

Motion by Councilor Whiting, seconded by Councilor Mills to grant the first reading of the ordinance amendment.

Motion by Councilor LaFountain, seconded by Councilor Mills to amend the ordinance by removing the 20-year contractual agreement and making it in perpetuity.
Vote: 6/2; Councilors LaFountain and Mills in favor.
Councilors Emhiser, Whiting, Grohman, Belanger, Ortiz and Lessard opposed.
Amendment fails.

Vote on ordinance: Unanimous.

2022.74 IN BOARD OF CITY COUNCIL...SEPTEMBER 6, 2022

BE IT ORDERED, that the Finance Director is authorized to create dedicated reserve accounts under the listed fund balance accounts, and transfer remaining funds from the FY 2022 Budget to said dedicated accounts as herein named in amounts not to exceed those stated, as of June 30, 2022 deducting any encumbrances:

10013-30101, General Fund Assigned Fund Balance

Account Description			***Amount***
Sidewalk Construction / Improvement			$ 75,000.00
IT Computer Hardware			$ 109,000.00
City Hall Improvements			$ 50,000.00
Thatcher Brook Watershed			$ 80,000.00
Munis Upgrade Planning			$ 50,000.00
Mechanics Park River Wall Repair			$ 200,000.00
New Furnace - PWD			$ 75,000.00
Elm & Pearl Study			$ 50,000.00
Lincoln St. Electric			$ 150,000.00
Intern/Management Analysts			$10,220.00
Grant Match Fund			$8,571.00
			$ 857,791.00

BE IT FURTHER ORDERED, that the City Manager be authorized to expend from the above dedicated reserves for expenses related to on-going project costs as approved in accordance with the Purchasing Code.

NOTE: The Finance Committee will consider this item at the September 6, 2022 meeting and vote on recommendation for approval by the City Council.

Motion by Councilor Whiting, seconded by Councilor Belanger to grant the order.
Vote: Unanimous.

2022.75 IN BOARD OF CITY COUNCIL..SEPTEMBER 6, 2022

QUESTION: Do you wish to have further considerations/discussions on recreational marijuana policy and ordinance language?

Motion by Councilor Whiting, seconded by Councilor Mills to continue consideration and discussions on recreational marijuana policies and ordinances.
Vote: 7/1; Councilor Lessard opposed.
Councilors Emhiser, Whiting, Grohman, Mills, Belanger, LaFountain and Ortiz in favor.
Motion carries.

2022.76 IN BOARD OF CITY COUNCIL…SEPTEMBER 6, 2022
BE IT ORDERED, that the City Council of the City of Biddeford does hereby authorize the City Manager to enter into an agreement with Sewall of Yarmouth, Maine for construction management services associated with the Pearl Street Reconstruction Project in an amount not-to-exceed $150,000.

Funding Note: Funding for the project will be covered under the Inspection and Contingency funds ($325,000) established for the Pearl Street Project.

Motion by Councilor Belanger, seconded by Councilor Whiting to grant the order.
Vote: 6/2; Councilors Lessard and Mills opposed.
Councilors Emhiser, Whiting, Grohman, Belanger, LaFountain and Ortiz in favor.
Motion carries.

Committee-of-the-Whole: Reapportionment of City Wards
Motion by Councilor Grohman, seconded by Councilor Belanger to move into Committee-of-the-Whole.
Vote: Unanimous. Time: 7:04 p.m.

City Clerk Carmen Bernier explained that, per City Charter, the City must conduct a reapportionment of City Wards every ten years. The last time a reapportionment was completed was in 2014; however, with the recent State redistricting and the finalization of the 2020 Census information, this is appropriate timing to conduct the City's reapportionment. Carmen provided proposed changes to the Wards, with the major changes being moving from 216 Granite Street to the end, as well as all side streets in this section of Granite Street from Ward 3 to Ward 7. There is also a proposed change to move part of Alfred Street from Ward 5 to Ward 4.

Overall, the Council was in favor of the proposed changes.

Motion by Councilor Belanger, seconded by Councilor Lessard to move out of Committee-of-the-Whole.
Vote: Unanimous. Time: 7:13 p.m.

Appointments:

IN BOARD OF CITY COUNCIL…SEPTEMBER 6, 2022
ORDERED, that I, Alan M. Casavant, Mayor of the City of Biddeford, do hereby appoint:

Matthew Grooms
City Planner

to the *Tri-City Transit Committee.*

Motion by Councilor Mills, seconded by Councilor Lessard to confirm the appointment.
Vote: Unanimous.

IN BOARD OF CITY COUNCIL…SEPTEMBER 6, 2022
ORDERED, that I, Alan M. Casavant, Mayor of the City of Biddeford, do hereby appoint:

James Flint
360 South Street
Ward 6

to the *Historic Preservation Commission*, replacing Jessica Muise, for a term to expire December 2024.

Motion by Councilor Whiting, seconded by Councilor Lessard to confirm the appointment.
Vote: Unanimous.

IN BOARD OF CITY COUNCIL…SEPTEMBER 6, 2022
ORDERED, that I, Alan M. Casavant, Mayor of the City of Biddeford, do hereby appoint:

Gregg Shapiro
9 Horrigan Court
Ward 6

to the *Recycling & Waste Management Commission*, replacing Lisa Brunelle, for a term to expire December 2024.

Motion by Councilor Grohman, seconded by Councilor Lessard to confirm the appointment.
Vote: Unanimous.

Public Addressing the Council...(5 minute limit per speaker; 30 minute total time limit):
There were no comments from the public.

City Manager Report:
City Manager James Bennett announced that he received two notices of retirement today. The first is from long-tenured Police Chief Roger Beaupre. After a little over 50 years of public service, Roger will be officially retiring in January 2023.

The second notice of retirement comes from City Clerk Carmen Bernier. Carmen is another long-tenured employee with over 28 years of service to the City. Her official retirement date is October 6, 2022.

Other Business:
Councilor Lessard: reminded folks that school is back in session, so folks should be more careful when driving around the City.

Councilor Grohman: asked if next Tuesday's tentative Council Workshop is now confirmed in light of the two retirement notices rendered today. City Manager Jim Bennett confirmed that the Council should plan on a Workshop next Tuesday.

Councilor Whiting: announced that this coming Saturday, Sept. 10th is Hazardous Waste Day at Biddeford Public Works Department from 8:00 a.m. to noon for residents of Biddeford, Saco and Old Orchard Beach.

Council President Addressing the Council: Councilor Belanger expressed his sadness to see both Roger and Carmen leave the City's employment. He noted that the longevity of both of these employees speaks to the stability of the City.

Mayor Addressing the Council: Mayor Casavant also expressed his sadness with the departure of both Roger and Carmen; but is so very happy for both of them as they embark on the next chapters of their lives.

Mayor Casavant had the opportunity to visit the Lincoln Hotel this past Friday, and was stunned at the work that has been done there. He noted that the attention to detail in the renovations is incredible. He continues to be very excited about all the wonderful changes going on at the Lincoln Mill, as well as in other areas of the City.

Motion by Councilor Belanger, seconded by Councilor Whiting to adjourn.
Vote: Unanimous. Time: 7:22 p.m.

Attest by:_____
Carmen J. Bernier, City Clerk

2022.72 **IN BOARD OF CITY COUNCIL..SEPTEMBER 6, 2022**

BE IT ORDAINED by the City Council of Biddeford, Maine to amend the Code of Ordinances of the City of Biddeford as follows:

Part III (Land Development Regulations), Article V (Establishment of Zones), Section 2 (General description of zones and allowed uses):

B. In order to promote condominium forms of housing and affordable housing in close proximity to downtown and services, in the R-1-A, R-1-B, R-2, R-3, OR, and MSRD-2 Zoning Districts the density requirements may be relaxed as follows:

1. Redevelopment of existing structures:
   a. The Planning Board, or other appropriate approval authority, shall consider granting a density bonus of one residential unit for every 650 square feet of living space within an existing structure, provided the applicant present redevelopment/renovation plans to the Code Enforcement Officer demonstrating how the redevelopment project will satisfy life/safety codes and result in the number of residential units with two or more bedrooms being at least, if not more than, the number of units with two or more bedrooms before the density bonus was granted.
   b. If the project is provided a density bonus, the Code Enforcement Officer shall document the allowable density and number of units, in writing, for the Code Enforcement Office files.
   c. An applicant ~~provided a density bonus for rental housing~~ shall enter into a 20-year contractual agreement with the City of Biddeford requiring that at least thirty percent (30%) of the additional units being created, with the minimum being one unit, ~~shall~~ be leased to households earning no more than 80% of the area median income (AMI) ~~such that they do~~ at a rate not to exceed ~~80% of~~ the Fair Market Rent (FMR) per bedroom size, as ~~established annually~~ published by the ~~U.S. Department of Housing and Urban Development (HUD)~~ Biddeford Housing Authority. The contractual agreement shall be signed by the applicant, a copy of which shall be provided to the Code Enforcement Office prior to the issuance of any building permits. Prior to receiving a Certificate of Occupancy, the applicant shall record~~ed~~ the agreement at the York County Registry of Deeds, a copy of which shall be provided to the Code Enforcement Office and Planning and Development Department.~~, prior to the issuance of any building permits.~~ Rent

restricted units will be annually monitored by the Planning and Development Department for contract compliance.

2. Condominium conversions/development:
   a. A property may be proposed for redevelopment/renovation from apartments into condominiums in accordance with 1. above.
   b. An applicant provided a density bonus for condominiums shall enter into a contractual agreement with the City of Biddeford obligating them to complete the project as condominiums to be offered for sale upon or before completion of the project in return for receiving the density bonus. The contractual agreement shall be recorded at the York County Registry of Deeds, a copy of which provided to the Code Enforcement Office, prior to the issuance of any building permits.
   c. The applicant agrees that if the project is converted to condominiums said units shall not be sold for a price that exceeds 125% of the York County median home price affordable to median income households as set annually by HUD for the City of Biddeford.

September 6, 2022

Motion by Councilor Whiting, seconded by Councilor Mills to grant the first reading of the ordinance amendment.

Motion by Councilor LaFountain, seconded by Councilor Mills to amend the ordinance by removing the 20-year contractual agreement and making it in perpetuity.
Vote: 6/2; Councilors LaFountain and Mills in favor.
Councilors Emhiser, Whiting, Grohman, Belanger, Ortiz and Lessard opposed.
Amendment fails.

Vote on ordinance: Unanimous.

City Council

Meeting Date: September 6, 2022
Meeting Time: 6:30 p.m.

Agenda Item No: 2022.72
Item Description: Proposed Amendments to Density Bonus Ordinance

Submitted by: Gail Wilkerson, HUD Housing Rehab Programs Director, Planning & Development Dept.

Supporting Information/Documentation:

Current Density Bonus Ordinance with proposed edits included (highlighted in red).

Key Terms: (1) Density Bonus: A prescribed relaxation of density requirements in the R-1-A, R-1-B, R-2, R-3, OR, and MSRD-2 Zoning Districts to promote affordable housing within existing structures that are in close proximity to downtown and services. (2) 80% of Area Median Income: The gross household income limit defined by the US Department of Housing & Urban Development (HUD) as "low income." (3) Fair Market Rent: The maximum gross rent established by HUD to be charged to low-income households assisted by federal programs (such as Section 8) for privately owned, decent, safe and sanitary housing of a modest (non-luxury) nature. It is generally calculated as the 40th percentile of gross rents in a local housing market, excluding low-quality units, already subsidized units, and units built in the last 2 years.

Executive Summary:

Clarity in the ordinance is needed to address numerous questions posed by property owners wishing to apply for the density bonus. Requested clarity includes: how long property owners must honor the affordability requirements on the 30% of newly created units; how to assure that low-income households benefit from the new rent-restricted units; and why the maximum rent in ordinance is lower (i.e., only 80% of fair market rent) than that of the Section 8 program (i.e., full fair market rent).

Detailed Review:

The Density Bonus program has enabled the creation of nearly 50 new units in Biddeford's downtown since 2020. Planning & Development staff who administer the program have spoken with many more property owners who would take advantage of the bonus if only: the rental affordability period had a predictable sunset; full fair market rent could be charged rather than the current 80% of FMR; and only "low-income" households were allowed to rent the newly affordable units. The attached highlighted edits address all these concerns. The proposed **20-year affordability period** aligns with typical rehab financing terms and return on investment horizons; **full fair market rent**, already at the 40th percentile of local rents, represents a significant rental subsidy without further discounting to 80% of FMR; and HUD's **80% of area median income criteria** is a time-tested federal benchmark for identifying low-income households, whom the affordability component of this ordinance was designed to benefit.

Funding Source:

N/A.

Staff Recommendation:

Staff concur with the Planning Board's recommendation to adopt the highlighted edits to the Density Bonus Ordinance, thereby clarifying its requirements, making it easier to administer, and encouraging its use by many more downtown property owners.

2022.78 **IN BOARD OF CITY COUNCIL...SEPTEMBER 20, 2022**

BE IT ORDERED, that the City Manager be authorized to enter into an agreement with Bill Dodge Buick GMC for one 2023 GMC Yukon to replace the current Fire Department Command Vehicle, in the amount of $51,941.50. Funding for the purchase of this vehicle is from the FY22 CIP.

NOTE: The Finance Committee will consider this item at their September 20, 2022 meeting and make a recommendation to the Council.

Finance Committee – City Council

Meeting Date: September 20, 2022
Meeting Time: 5:00 PM/6:00 PM

Agenda Item No:
Item Description: 2022.78) Authorization/Purchase of Fire Department Command vehicle

Submitted by: Jeff Demers - Public Works Director

Jerry Court, Garage Supervisor

Scott Gagne, Fire Chief

Supporting Information/Documentation:

Bill Dodge price sheet

Fire Chiefs Explanation

Executive Summary:

Approval to purchase 4x4 SUV

Detailed Review:

The public works department is requesting the approval to purchase a 2023 Yukon for the Fire department to replace car 3. Public works department publicly advertised and reached out to the following dealerships. Arundel Ford, Weirs Motors, Rowe Ford, Bill Dodge, Quirk Chevy. We received only (1) Bid.

The only vendor at this time that will give us Government pricing is Bill Dodge

Funding Source:

This vehicle was budgeted in FY2022 CIP

Staff Recommendation:

Staff recommends going forward with purchase from Bill Dodge for a total of $51,941.50 for this SUV 4X4. Staff will be available for any further questions.

CITY OF BIDDEFORD
FIRE DEPARTMENT

152 Alfred Street
Biddeford, Maine 04005
Tel: 207-282-6632
Fax: 207-283-8243

Chief Scott R. Gagne

Assistant Chief Ed Dexter

Deputy Chief Kenneth Thorpe

Thank you for your consideration for replacement of the 2009 Command Vehicle. This vehicle is used to help manage Command of emergency scenes to include but no limited to Incident Command, Operations, Accountability, Resource, Safety, Water supply, and Staging.

This unit will be used by a Chief Officer and will be fitted with a Command Operations Center in the rear of it that slides our from the vehicle and has radios, white boards and a large amount of material to control an incident. It also has EMS and firefighting equipment, and material to deal with hazmat and mass casualty incidents.

The vehicle that it is replacing is a 2009 and has come to the end of its life, additionally it is in need of a lot of repairs to keep the vehicle on the road.

Thank you

Scott Gagne

2022.79 **IN BOARD OF CITY COUNCIL..SEPTEMBER 20, 2022**

BE IT ORDERED, that the City Manager be authorized to enter into an agreement with United Construction & Forestry for one 2022 John Deere Loader and one RPM Snow Blower in the amount of ~~$465,540~~ $401,863 to be used as Snow Removal Equipment (SRE) at the Biddeford Municipal Airport. Funding will breakdown as follows: $361,676.70 through Maine Department of Transportation Grant; $40,186.30 from FY22 Capital Improvement Projects Fund.

Note: The Finance Committee will consider this item at their September 20, 2022 meeting and make a recommendation to the Council.

Finance Committee - City Council

Meeting Date: 9/20/2022
Meeting Time: 5:00 PM/6:00 PM

Agenda Item No:
Item Description: 2022.79) Authorization/Purchase of Loader – RPM Snow Blower for the Biddeford Airport.

Submitted by: Jeff Demers – Jerry Court

Supporting Information/Documentation:

Bid tabulation

General Specifications

Executive Summary:

The public Works Department is seeking approval to purchase (1) John Deere loader and (1) RPM Snow Blower for a total sum of $465,540 with the assistance of a Department of Transportation (D.O.T) grant of $400,000.

Detailed Review:

Public works is requesting to purchase a new 2022 John-Deere loader and (1) RPM Snow Blower. Through the services of Gale Associates (Airport Planning and Engineering services) a grant application was submitted to the D.O.T. The City's application received a grant of $400,000 dollars. A RFB was posted. The following three items were advertised One Loader, Snow Blower and a Snow Pusher blade. Two bids were received. One from United Construction (John-Deere) and one from Beauregard Construction (Case). Both pieces of equipmentment meet the standards of the Federal Aviation Administration per inches of snow per hour.

Public works is looking for the authorization from finance and council to move forward with the following two pieces of equipment from United Construction. One Loader and One RPM Snow Blower. Staff is requesting the approval of the higher bid from United Construction. United is a vendor of John Deere equipment. John Deere matches todays fleet of public works loaders and snow equipment. This like equipment will allow Public works to help with emergency snow removal if needed. Public works will retain the existing airport loader and blower at no charge.

Funding Source:

John Deere Loader and RPM Snow Blower are being funded by the 2022 Capital Improvement plan.

Staff Recommendation:

Staff is recommending the purchase through United Construction for a total price of $465,000

- $400,000 through Maine Department of Transportation Grant
- Remaining Balance of $65,540 From capital Improvement funds

BID SUMMARY PAGE

BIDDEFORD MUNICIPAL AIRPORT
BIDDEFORD, MAINE

PURCHASE SNOW REMOVAL EQUIPMENT (SRE)

MaineDOT PIN: XXXXXX.XX (PENDING)

SCHEDULE OF UNIT PRICES

BASE BID

IMPORTANT: BIDDERS MUST BID ON ALL ITEMS.

ITEM NO.	ESTIMATED QUANTITY	ITEM DESCRIPTION WITH UNIT BID PRICE WRITTEN IN WORDS	UNIT PRICE		AMOUNT	
			Dollars	Cents	Dollars	Cents
M-002-1	1 LS	Front-End Loader for the unit price per Lump Sum of: TWO HUNDRED SEVENTY SEVEN THOUSAND THIRTY FIVE dollars and _____ cents.	277,035			
M-003-1	1 LS	Attachment: Rotary Plow (Snow Blower) for the unit price per Lump Sum of: ONE HUNDRED EIGHTY EIGHT THOUSAND FIVE HUNDRED FIVE dollars and _____ cents.	188,505			
M-003-2	1 LS	Attachment: Ramp Plow (Snow Pusher) for the unit price per Lump Sum of: THIRTY FOUR THOUSAND THREE HUNDRED SIXTY FIVE dollars and _____ cents.	34,365			

United Construction & Forestry (John Deere) = 465,540 without snow pusher

BASE BID SUMMARY

TOTAL BASE BID:

FOUR HUNDRED NINETY NINE THOUSAND NINE HUNDRED
(words)

FIVE dollars

and _____ cents ($499,905).
(figures)

The Owner reserves the right to delete any item of work in whole or in part, in order to meet the available funding.

Amounts are to be shown in both words and figures. In case of Discrepancy, the amount shown in words will govern.

The above unit prices shall include all labor, materials, overhead, profit, insurance, etc., to cover the finished work of the several kinds called for.

624 P

Wheel Loader

JOHN DEERE

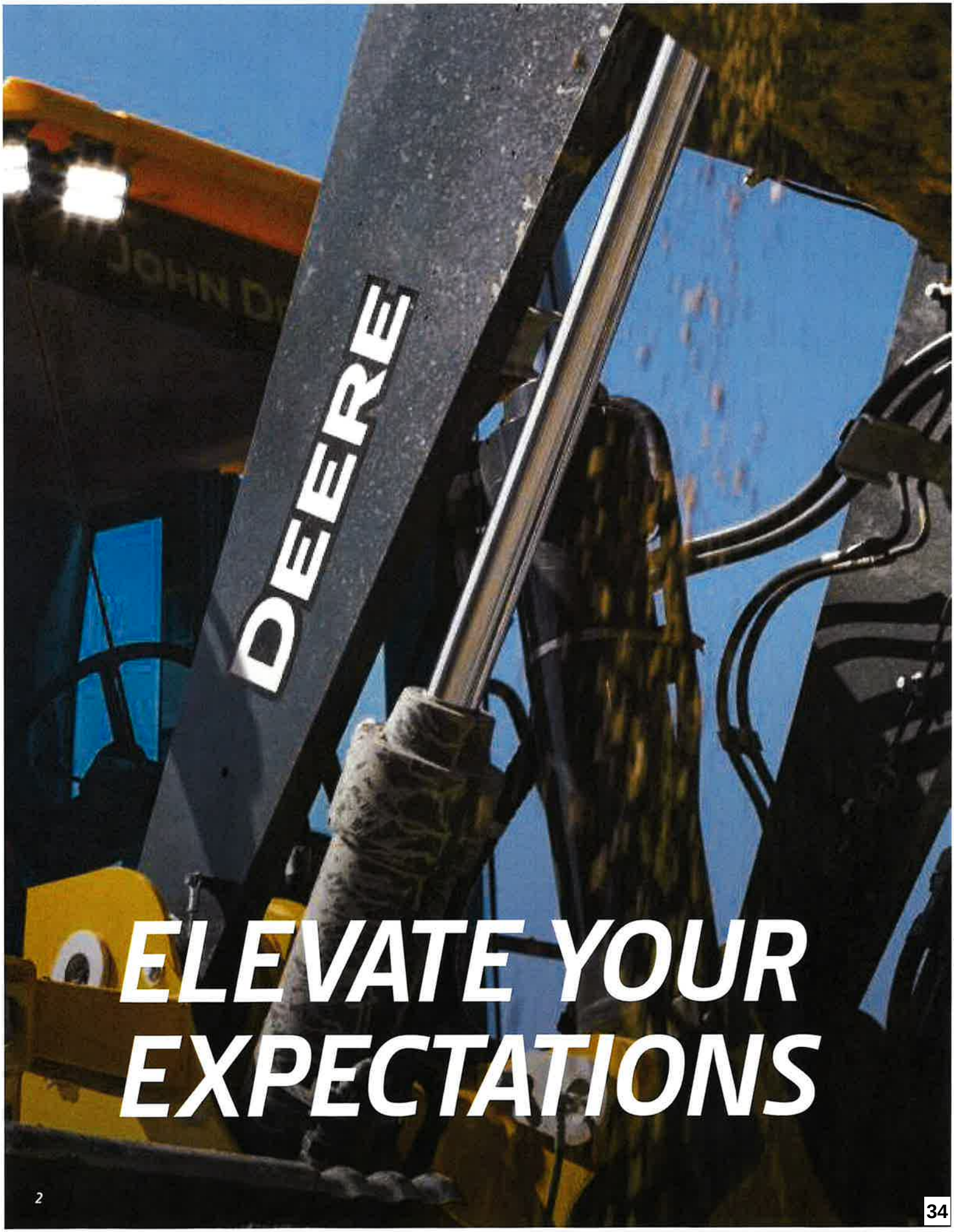

ELEVATE YOUR EXPECTATIONS

ABOVE AND BEYOND

MEET THE P-TIER WHEEL LOADERS

INTUITIVE CONTROLS

When your material-handling application needs a heavy-duty lift, add a P-Tier Wheel Loader to your lineup. Combining convenient front-end features with near-parallel lift, spacious operator stations including customizable ergonomic electrohydraulic (EH) controls, and streamlined electrical and hydraulic routing, these versatile and productive mid-size models are designed to help you take your operation to the next level.

Take control

Operators can easily control up to six functions without letting go of the ergonomically designed joystick. Two industry-exclusive multifunction buttons can each be programmed to handle any of up to 10 functions selected through the monitor, including bucket vibrate and EH Precision mode.

The bucket list

A wide selection of enhanced production buckets with integrated spill guards, curved side cutters, and impressive rollback delivers elevated bucket-fill performance and material retention compared to earlier offerings.

Remote diagnostics and support

To maximize uptime and lower costs, JDLink™ connectivity provides machine location, utilization data, and alerts to help you maximize productivity and efficiency. JDLink also enables John Deere Connected Support™. Dealers use Expert Alerts based on data from thousands of connected machines to proactively address conditions that may otherwise likely lead to downtime. Your dealer can also monitor machine health and leverage remote diagnostics and programming capability to further diagnose problems and even update machine software without a time-consuming trip to the jobsite.*

*Availability varies by region. Options not available in every country.

At the forefront

Featuring bucket and linkage designs that improve load leveling, material retention, and visibility, these loaders yield more productivity and performance than previous models.

It's easy to see

Large seven-inch in-cab display with easy-on-the-eyes clarity enables intuitive push-button access to key info. Standard rearview camera displays the activity behind the machine on the color LCD screen.

On your side

All daily service points including fuel refill are conveniently grouped at ground level on the left side of the machine for easy access. Routing of electrical wire harnesses and hydraulic hoses has been streamlined.

624 P

WHEEL LOADER

VERSATILE BUCKET + LINKAGE DESIGNS

OVERACHIEVERS

ASPIRE TO GO HIGHER.

With handy front-end features and plenty of productivity-boosting enhancements over previous models, our 624 P-Tier Wheel Loader redefines expectations about the heights a utility loader can reach.

Have a seat

Spacious and comfortable cab features extra legroom, an improved HVAC system, additional storage, and a more adjustable seat than earlier models.

Smooth operator

Seat-mounted right-hand joystick features two programmable multifunction buttons and electrohydraulic (EH) controls that are more intuitive to operate compared to our K-Series controls.

Get carried away

Tool Carrier configuration enables a clear view of the coupler and forks, making it easier to quickly move pipes, logs, and pallets.

Pretty big plus

High-Lift Plus configuration provides an additional 24 inches of hinge-pin height over standard lift height and 12 inches over the High-Lift model. All three lift heights feature near-parallel lift.

Clear advantage

Improved visibility to the work tool helps reduce spillage as well as cycle and tool-changeover times. It also helps minimize machine damage when working on crowded jobsites or up against walls.

Step it up

Quad-Cool™ places the radiator, air-conditioner condenser, intercooler, and hydraulic, transmission, and axle coolers in a unique boxed configuration that's isolated from engine heat, boosting efficiency and durability.

624 P

624 P-TIER WHEEL LOADER SPECIFICATIONS

While general information, pictures, and descriptions are provided, some illustrations and text may include product options and accessories NOT AVAILABLE in all regions, and in some countries products and accessories may require modifications or additions to ensure compliance with the local regulations of those countries.

Engine	**624 P-TIER Z-BAR / HIGH-LIFT / HIGH-LIFT PLUS / TOOL CARRIER**		
Manufacturer and Model	John Deere PowerTech™ PVS 6068	Gross Peak Torque (ISO 9249)	923 Nm (681 ft.-lb.) at 1,500 rpm
Non-Road Emission Standard	EPA Final Tier 4/EU Stage V	Net Torque Rise	58% standard
Cylinders	6	Fuel System (electronically controlled)	High-pressure common rail
Valves Per Cylinder	4	Lubrication	Full-flow spin-on filter and integral cooler
Displacement	6.8 L (414 cu. in.)	Aspiration	Turbocharged, charge air cooled
Net Peak Power (ISO 9249)	143 kW (192 hp) at 1,600 rpm	Air Cleaner	Under-hood, dual-element dry type, restriction indicator in cab monitor for service
Gross Peak Power (ISO 9249)	152 kW (203 hp) at 1,600 rpm		
Net Peak Torque (ISO 9249)	874 Nm (644 lb.-ft.) at 1,300 rpm		
Cooling			
Fan Drive	Hydraulically driven, proportionally controlled, fan aft of coolers		
Electrical			
Electrical System	24 volt with 130-amp alternator		
Batteries (2 – 12 volt)	950 CCA (each)		
Transmission System			
Type	Countershaft-type PowerShift™		
Torque Converter	Single stage, single phase		
Shift Control	Electronically modulated, adaptive, load and speed dependent		
Operator Interface	Steering-column or joystick-mounted F-N-R and gear-select lever; kick-down button on hydraulic lever		
Shift Modes	Manual/auto (1st–D or 2nd–D); Quick-Shift button with 2 selectable modes: kick-down or kick-up/down; and 4 clutch cutoff settings		
	Standard 5-Speed With Lockup Torque Converter		*Optional 5-Speed Without Lockup Torque Converter*
Maximum Travel Speeds (with 20.5 R 25 tires)	*Forward*	*Reverse*	*Forward*	*Reverse*
Range 1	7.0 km/h (4.3 mph)	6.6 km/h (4.1 mph)	6.3 km/h (3.9 mph)	6.7 km/h (4.1 mph)
Range 2	12.1 km/h (7.5 mph)	12.8 km/h (7.9 mph)	11.4 km/h (7.0 mph)	12.0 km/h (7.4 mph)
Range 3	18.7 km/h (11.6 mph)	30.7 km/h (19.0 mph)	17.5 km/h (10.8 mph)	28.7 km/h (17.8 mph)
Range 4	29.1 km/h (18.1 mph)	N/A	27.2 km/h (16.9 mph)	N/A
Range 5	40.0 km/h (24.8 mph)	N/A	40.0 km/h (24.8 mph)	N/A
Axles/Brakes			
Final Drives	Heavy-duty inboard-mounted planetary		
Differentials	Hydraulic locking front with conventional rear — standard; dual locking front and rear — optional		
Rear Axle Oscillation, Stop to Stop (with 20.5 R 25 tires)	24 deg. (12 deg. each direction)		
Brakes (conform to ISO 3450)			
Service	Hydraulically actuated, spring-retracted, self-adjusting inboard sun-shaft mounted, oil cooled, single disc		
Parking	Automatic spring applied, hydraulically released, driveline mounted, oil-cooled, multi disc		
Tires/Wheels *(see page 10 for complete tire adjustments)*			
	Tread Width	*Width Over Tires*	
Michelin 20.5 R 25, 1 Star L-3 XHA2	2053 mm (80.8 in.)	2657 mm (104.6 in.)	
Serviceability			
Refill Capacities		**Refill Capacities** *(continued)*	
Fuel Tank (with lockable cap)	299 L (79 gal.)	Axle Oil (each)	
Cooling System	36.5 L (38.6 qt.)	Front	22 L (23 qt.)
Diesel Exhaust Fluid (DEF)	15.6 L (16.5 qt.)	Rear	17 L (18 qt.)
Engine Oil With Vertical Spin-On Filter	19.5 L (20.6 qt.)	Hydraulic Reservoir and Filter	102.8 L (27.2 gal.)
Transmission Reservoir With Vertical Filter	27 L (28.5 qt.)	Park Brake Oil (wet disc)	0.3 L (10 oz.)
Hydraulic System/Steering			
Pump (loader and steering)	Variable-displacement, axial-piston pump; closed-center, pressure-compensating system		
Maximum Rated Flow at 6895 kPa (1,000 psi) and 2,200 rpm	261 L/m (69 gpm)		
System Relief Pressure (loader and steering)	24 821 kPa (3,675 psi)		
Loader Controls	2-function valve, joystick control or fingertip controls, hydraulic-function enable/disable, optional 3rd- and 4th-function valve with auxiliary lever		
Steering (conforms to ISO 5010)	Steering-column-mounted, twist-grip shift lever; Quick-Shift button on hydraulic lever		
Type	Power, fully hydraulic		
Articulation Angle	80-deg. arc (40 deg. each direction)		
Turning Radius (measured to centerline of outside tire)	5.27 m (17 ft. 4 in.)		

While general information, pictures, and descriptions are provided, some illustrations and text may include product options and accessories NOT AVAILABLE in all regions, and in some countries products and accessories may require modifications or additions to ensure compliance with the local regulations of those countries.

Hydraulic System/Steering *(continued)*	624 P-TIER Z-BAR / HIGH-LIFT / HIGH-LIFT PLUS / TOOL CARRIER	
Hydraulic Cycle Times	*Z-Bar / High-Lift / High-Lift Plus*	*Tool Carrier*
Raise	5.5 sec.	5.8 sec.
Dump	2.0 sec.	2.5 sec.
Lower (power down)	4.0 sec.	4.0 sec.
Total	11.5 sec.	12.3 sec.
Bucket Capacity Range		
Bucket Type		
Pin-On	2.7–2.9 m³ (3.5–3.75 cu. yd.)	
Coupler	1.9–4.0 m³ (2.5–5.25 cu. yd.)	

Dimensions and Specifications With Pin-On Bucket With Bolt-On Edge

624 P-TIER Z-BAR / HIGH-LIFT / HIGH-LIFT PLUS LOADERS WITH PIN-ON BUCKET WITH BOLT-ON EDGE

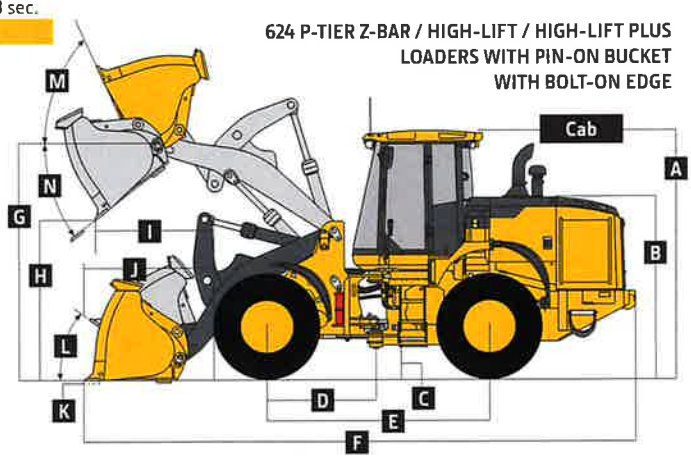

	Z-Bar	Z-Bar	High-Lift	High-Lift	High-Lift Plus	High-Lift Plus
Dimensions With Bucket With Bolt-On Edge *(illustration above right)*	*2.7-m³ (3.5 cu. yd.) general purpose*	*2.9-m³ (3.75 cu. yd.) general purpose*	*2.7-m³ (3.5 cu. yd.) general purpose*	*2.9-m³ (3.75 cu. yd.) general purpose*	*2.7-m³ (3.5 cu. yd.) general purpose*	*2.9-m³ (3.75 cu. yd.) general purpose*
A Height to Top of Cab	3.40 m (11 ft. 2 in.)	3.40 m (11 ft. 2 in.)	3.40 m (11 ft. 2 in.)	3.40 m (11 ft. 2 in.)	3.40 m (11 ft. 2 in.)	3.40 m (11 ft. 2 in.)
B Hood Height	2.46 m (8 ft. 1 in.)	2.46 m (8 ft. 1 in.)	2.46 m (8 ft. 1 in.)	2.46 m (8 ft. 1 in.)	2.46 m (8 ft. 1 in.)	2.46 m (8 ft. 1 in.)
C Ground Clearance	384 mm (15.1 in.)	384 mm (15.1 in.)	384 mm (15.1 in.)	384 mm (15.1 in.)	384 mm (15.1 in.)	384 mm (15.1 in.)
D Length From Centerline to Front Axle	1.52 m (5 ft. 0 in.)	1.52 m (5 ft. 0 in.)	1.52 m (5 ft. 0 in.)	1.52 m (5 ft. 0 in.)	1.52 m (5 ft. 0 in.)	1.52 m (5 ft. 0 in.)
E Wheelbase	3.09 m (10 ft. 1 in.)	3.09 m (10 ft. 1 in.)	3.09 m (10 ft. 1 in.)	3.09 m (10 ft. 1 in.)	3.09 m (10 ft. 1 in.)	3.09 m (10 ft. 1 in.)
F Overall Length, Bucket on Ground	7.76 m (25 ft. 6 in.)	7.83 m (25 ft. 8 in.)	8.22 m (27 ft. 0 in.)	8.22 m (27 ft. 0 in.)	8.52 m (27 ft. 11 in.)	8.58 m (28 ft. 2 in.)
G Height to Hinge Pin, Fully Raised	3.96 m (13 ft. 0 in.)	3.96 m (13 ft. 0 in.)	4.32 m (14 ft. 2 in.)	4.32 m (14 ft. 2 in.)	4.57 m (15 ft. 0 in.)	4.57 m (15 ft. 0 in.)
H Dump Clearance, 45 deg., Full Height	2.84 m (9 ft. 4 in.)	2.80 m (9 ft. 2 in.)	3.20 m (10 ft. 6 in.)	3.16 m (10 ft. 4 in.)	3.46 m (11 ft. 4 in.)	3.41 m (11 ft. 2 in.)
I Reach, 45-deg. Dump, Full Height	1.07 m (3 ft. 6 in.)	1.12 m (3 ft. 8 in.)	1.21 m (4 ft. 0 in.)	1.25 m (4 ft. 1 in.)	1.22 m (4 ft. 0 in.)	1.27 m (4 ft. 2 in.)
J Reach, 45-deg. Dump, 2.13-m (7 ft. 0 in.) Clearance	1.59 m (5 ft. 2 in.)	1.61 m (5 ft. 3 in.)	1.98 m (6 ft. 6 in.)	2.00 m (6 ft. 7 in.)	2.20 m (7 ft. 2 in.)	2.22 m (7 ft. 3 in.)
K Maximum Digging Depth	0.10 m (4 in.)	0.11 m (4 in.)	0.20 m (8 in.)	0.21 m (8 in.)	0.20 m (8 in.)	0.20 m (8 in.)
L Maximum Rollback at Ground Level	44 deg.	44 deg.	48 deg.	48 deg.	49 deg.	49 deg.
M Maximum Rollback, Boom Fully Raised	60 deg.	60 deg.	60 deg.	60 deg.	60 deg.	60 deg.
N Maximum Bucket Dump Angle, Fully Raised	48 deg.	48 deg.	46 deg.	46 deg.	45 deg.	45 deg.
Loader Clearance Circle, Bucket Carry Position	12.02 m (39 ft. 5 in.)	12.04 m (39 ft. 6 in.)	12.32 m (40 ft. 5 in.)	12.5 m (41 ft. 0 in.)	12.66 m (41 ft. 6 in.)	12.78 m (41 ft. 11 in.)
Specifications With Bucket With Bolt-On Edge						
Capacity, Heaped	2.7 m³ (3.5 cu. yd.)	2.9 m³ (3.75 cu. yd.)	2.7 m³ (3.5 cu. yd.)	2.9 m³ (3.75 cu. yd.)	2.7 m³ (3.5 cu. yd.)	2.9 m³ (3.75 cu. yd.)
Capacity, Struck	2.2 m³ (2.9 cu. yd.)	2.4 m³ (3.1 cu. yd.)	2.2 m³ (2.9 cu. yd.)	2.4 m³ (3.1 cu. yd.)	2.2 m³ (2.9 cu. yd.)	2.4 m³ (3.1 cu. yd.)
Bucket Weight With Bolt-On Cutting Edge	1196 kg (2,637 lb.)	1239 kg (2,732 lb.)	1196 kg (2,637 lb.)	1239 kg (2,732 lb.)	1196 kg (2,637 lb.)	1239 kg (2,732 lb.)
Bucket Width	2.69 m (8 ft. 10 in.)	2.69 m (8 ft. 10 in.)	2.69 m (8 ft. 10 in.)	2.69 m (8 ft. 10 in.)	2.69 m (8 ft. 10 in.)	2.69 m (8 ft. 10 in.)
Breakout Force	13 605 kg (29,994 lb.)	12 929 kg (28,503 lb.)	13 443 kg (29,638 lb.)	12 774 kg (28,163 lb.)	13 510 kg (29,785 lb.)	12 839 kg (28,304 lb.)
Tipping Load, Straight, No Tire Deflection	13 205 kg (29,113 lb.)	13 116 kg (28,915 lb.)	11 132 kg (24,541 lb.)	11 060 kg (24,383 lb.)	10 297 kg (22,701 lb.)	10 231 kg (22,555 lb.)
Tipping Load, Straight, With Tire Deflection	12 435 kg (27,414 lb.)	12 345 kg (27,216 lb.)	10 563 kg (23,287 lb.)	10 488 kg (23,122 lb.)	9792 kg (21,588 lb.)	9723 kg (21,436 lb.)
Tipping Load, 40-deg. Full Turn, No Tire Deflection	11 439 kg (25,218 lb.)	11 359 kg (25,042 lb.)	9595 kg (21,153 lb.)	9530 kg (21,010 lb.)	8837 kg (19,483 lb.)	8778 kg (19,351 lb.)
Tipping Load, 40-deg. Full Turn, With Tire Deflection	10 425 kg (22,983 lb.)	10 338 kg (22,791 lb.)	8820 kg (19,445 lb.)	8754 kg (19,299 lb.)	8145 kg (17,957 lb.)	8091 kg (17,838 lb.)
Rated Operating Load, 50% Full-Turn Tipping Load, No Tire Deflection (conforms to ISO 14397-1)*	5719 kg (12,609 lb.)	5680 kg (12,521 lb.)	4797 kg (10,576 lb.)	4765 kg (10,505 lb.)	4419 kg (9,741 lb.)	4389 kg (9,676 lb.)
Rated Operating Load, 50% Full-Turn Tipping Load, With Tire Deflection (conforms to ISO 14397-1)*	5213 kg (11,492 lb.)	5169 kg (11,396 lb.)	4410 kg (9,722 lb.)	4377 kg (9,650 lb.)	4073 kg (8,978 lb.)	4046 kg (8,919 lb.)
Operating Weight	15 747 kg (34,715 lb.)	15 790 kg (34,810 lb.)	15 953 kg (35,171 lb.)	15 996 kg (35,266 lb.)	16 195 kg (35,703 lb.)	16 238 kg (35,798 lb.)

Loader operating information is based on machine with identified linkage and standard equipment, PowerTech PVS 6068 (EPA Final Tier 4/EU Stage V) engine, ROPS cab, rear cast bumper/counterweight, transmission side-frame guards, bottom guards, standard tires, full fuel tank, and 79-kg (175 lb.) operator. This information is affect by changes in tires, ballast, and different attachments, and assumes no tire deflection per the standard ISO 14397-1 section 5.

**Rated operating capacity based on Deere attachments only.*

624 P-TIER

While general information, pictures, and descriptions are provided, some illustrations and text may include product options and accessories NOT AVAILABLE in all regions, and in some countries products and accessories may require modifications or additions to ensure compliance with the local regulations of those countries.

Dimensions and Specifications With HI-Vis Coupler and Hook-On Bucket With Bolt-On Edge — **624 P-TIER Z-BAR / HIGH-LIFT / HIGH-LIFT PLUS / TOOL CARRIER**

624 P-TIER Z-BAR / HIGH-LIFT / HIGH-LIFT PLUS LOADERS WITH HI-VIS COUPLER AND HOOK-ON BUCKET WITH BOLT-ON EDGE

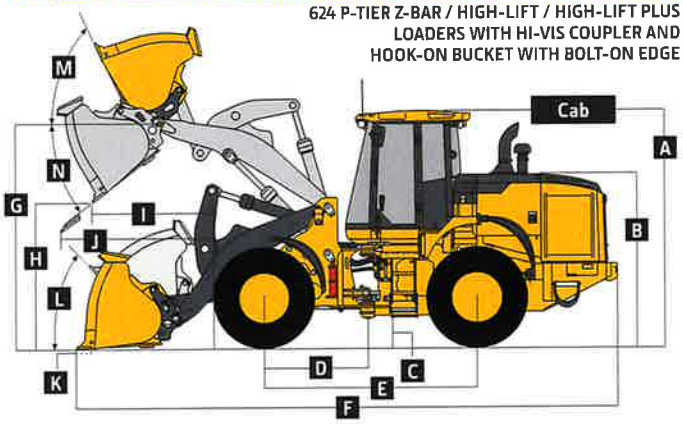

624 P-TIER TOOL-CARRIER LOADER WITH HI-VIS COUPLER AND HOOK-ON BUCKET WITH BOLT-ON EDGE

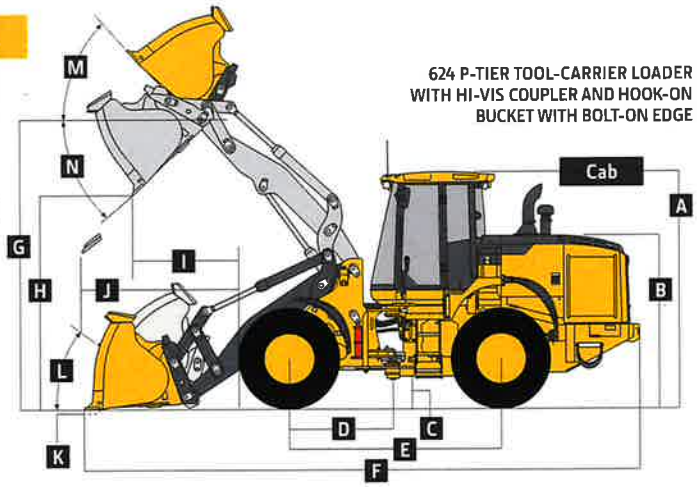

	Z-Bar 2.7-m³ (3.5 cu. yd.) general purpose	*Z-Bar 4.0-m³ (5.25 cu. yd.) light material*	*High-Lift 2.5-m³ (3.25 cu. yd.) general purpose*	*High-Lift 3.4-m³ (4.5 cu. yd.) light material*	*High-Lift Plus 2.3-m³ (3.0 cu. yd.) general purpose*	*High-Lift Plus 3.1-m³ (4.0 cu. yd.) light material*	*Tool Carrier 2.7-m³ (3.5 cu. yd.) general purpose*	*Tool Carrier 3.4-m³ (4.5 cu. yd.) light material*
Dimensions With Bucket With Bolt-On Edge ***(illustrations above)***								
A Height to Top of Cab	3.40 m (11 ft. 2 in.)	3.40 m (11 ft. 2 in.)	3.40 m (11 ft. 2 in.)	3.40 m (11 ft. 2 in.)	3.40 m (11 ft. 2 in.)	3.40 m (11 ft. 2 in.)	3.40 m (11 ft. 2 in.)	3.40 m (11 ft. 2 in.)
B Hood Height	2.46 m (8 ft. 1 in.)	2.46 m (8 ft. 1 in.)	2.46 m (8 ft. 1 in.)	2.46 m (8 ft. 1 in.)	2.46 m (8 ft. 1 in.)	2.46 m (8 ft. 1 in.)	2.46 m (8 ft. 1 in.)	2.46 m (8 ft. 1 in.)
C Ground Clearance	384 mm (15.1 in.)	384 mm (15.1 in.)	384 mm (15.1 in.)	384 mm (15.1 in.)	384 mm (15.1 in.)	384 mm (15.1 in.)	384 mm (15.1 in.)	384 mm (15.1 in.)
D Length From Centerline to Front Axle	1.52 m (5 ft. 0 in.)	1.52 m (5 ft. 0 in.)	1.52 m (5 ft. 0 in.)	1.52 m (5 ft. 0 in.)	1.52 m (5 ft. 0 in.)	1.52 m (5 ft. 0 in.)	1.52 m (5 ft. 0 in.)	1.52 m (5 ft. 0 in.)
E Wheelbase	3.09 m (10 ft. 1 in.)	3.09 m (10 ft. 1 in.)	3.09 m (10 ft. 1 in.)	3.09 m (10 ft. 1 in.)	3.09 m (10 ft. 1 in.)	3.09 m (10 ft. 1 in.)	3.09 m (10 ft. 1 in.)	3.09 m (10 ft. 1 in.)
F Overall Length, Bucket on Ground	7.89 m (25 ft. 11 in.)	8.04 m (26 ft. 5 in.)	8.31 m (27 ft. 3 in.)	8.50 m (27 ft. 11 in.)	8.53 m (28 ft. 0 in.)	8.66 m (28 ft. 5 in.)	7.99 m (26 ft. 2 in.)	8.13 m (26 ft. 8 in.)
G Height to Hinge Pin, Fully Raised	3.96 m (13 ft. 0 in.)	3.96 m (13 ft. 0 in.)	4.32 m (14 ft. 2 in.)	4.32 m (14 ft. 2 in.)	4.57 m (15 ft. 0 in.)	4.57 m (15 ft. 0 in.)	4.00 m (13 ft. 1 in.)	4.00 m (13 ft. 1 in.)
H Dump Clearance, 45 deg., Full Height	2.76 m (9 ft. 1 in.)	2.66 m (8 ft. 9 in.)	3.15 m (10 ft. 4 in.)	3.02 m (9 ft. 11 in.)	3.45 m (11 ft. 4 in.)	3.37 m (11 ft. 1 in.)	2.74 m (9 ft. 0 in.)	2.64 m (8 ft. 8 in.)
I Reach, 45-deg. Dump, Full Height	1.17 m (3 ft. 10 in.)	1.28 m (4 ft. 2 in.)	1.28 m (4 ft. 2 in.)	1.42 m (4 ft. 8 in.)	1.24 m (4 ft. 1 in.)	1.34 m (4 ft. 5 in.)	1.39 m (4 ft. 7 in.)	1.51 m (4 ft. 11 in.)
J Reach, 45-deg. Dump, 2.13-m (7 ft. 0 in.) Clearance	1.64 m (5 ft. 5 in.)	1.69 m (5 ft. 7 in.)	2.03 m (6 ft. 8 in.)	2.10 m (6 ft. 11 in.)	2.21 m (7 ft. 3 in.)	2.27 m (7 ft. 6 in.)	1.83 m (6 ft. 0 in.)	1.89 m (6 ft. 2 in.)
K Maximum Digging Depth	0.10 m (4 in.)	0.11 m (4 in.)	0.20 m (8 in.)	0.21 m (8 in.)	0.19 m (7 in.)	0.19 m (7 in.)	0.13 m (5 in.)	0.13 m (5 in.)
L Maximum Rollback at Ground Level	44 deg.	44 deg.	48 deg.	48 deg.	49 deg.	49 deg.	52 deg.	52 deg.
M Maximum Rollback, Boom Fully Raised	60 deg.	60 deg.	60 deg.	60 deg.	60 deg.	60 deg.	57 deg.	57 deg.
N Maximum Bucket Dump Angle, Fully Raised	48 deg.	48 deg.	46 deg.	45 deg.	45 deg.	45 deg.	50 deg.	50 deg.
Loader Clearance Circle, Bucket Carry Position	12.06 m (39 ft. 7 in.)	12.44 m (40 ft. 10 in.)	12.34 m (40 ft. 6 in.)	12.80 m (42 ft. 0 in.)	12.76 m (41 ft. 11 in.)	13.00 m (42 ft. 8 in.)	12.24 m (40 ft. 2 in.)	12.5 m (41 ft. 0 in.)
Specifications With Bucket With Bolt-On Edge								
Capacity, Heaped	2.7 m³ (3.5 cu. yd.)	4.0 m³ (5.25 cu. yd.)	2.5 m³ (3.25 cu. yd.)	3.4 m³ (4.5 cu. yd.)	2.3 m³ (3.0 cu. yd.)	3.1 m³ (4.0 cu. yd.)	2.7 m³ (3.5 cu. yd.)	3.4 m³ (4.5 cu. yd.)
Capacity, Struck	2.17 m³ (2.8 cu. yd.)	3.46 m³ (4.53 cu. yd.)	2.1 m³ (2.7 cu. yd.)	2.9 m³ (3.8 cu. yd.)	1.9 m³ (2.4 cu. yd.)	2.6 m³ (3.4 cu. yd.)	1.9 m³ (2.4 cu. yd.)	2.9 m³ (3.8 cu. yd.)
Bucket Weight With Bolt-On Cutting Edge	1655 kg (3,649 lb.)	1925 kg (4,245 lb.)	1633 kg (3,601 lb.)	1843 kg (4,063 lb.)	1586 kg (3,496 lb.)	1780 kg (3,924 lb.)	1437 kg (3,167 lb.)	1626 kg (3,584 lb.)
Bucket Width	2.68 m (8 ft. 10 in.)	3.05 m (10 ft. 0 in.)	2.69 m (8 ft. 10 in.)	2.89 m (9 ft. 6 in.)	2.69 m (8 ft. 10 in.)	2.89 m (9 ft. 6 in.)	2.68 m (8 ft. 10 in.)	2.89 m (9 ft. 6 in.)
Breakout Force	12 161 kg (26,810 lb.)	10 789 kg (23,785 lb.)	13 052 kg (28,776 lb.)	10 709 kg (23,610 lb.)	13 266 kg (29,246 lb.)	11 874 kg (23,731 lb.)	11 477 kg (25,302 lb.)	10 290 kg (22,686 lb.)
Tipping Load, Straight, No Tire Deflection	12 357 kg (27,242 lb.)	11 990 kg (26,434 lb.)	10 624 kg (23,422 lb.)	10 177 kg (22,437 lb.)	9779 kg (21,559 lb.)	9547 kg (20,701 lb.)	11 577 kg (25,523 lb.)	11 544 kg (25,450 lb.)
Tipping Load, Straight, With Tire Deflection	11 613 kg (25,602 lb.)	11 220 kg (24,736 lb.)	10 074 kg (22,209 lb.)	9600 kg (21,164 lb.)	9294 kg (20,490 lb.)	9042 kg (19,577 lb.)	10 920 kg (24,074 lb.)	10 854 kg (23,929 lb.)
Tipping Load, 40-deg. Full Turn, No Tire Deflection	10 652 kg (23,483 lb.)	10 292 kg (22,690 lb.)	9130 kg (20,127 lb.)	8690 kg (19,158 lb.)	8348 kg (18,405 lb.)	8120 kg (17,581 lb.)	9993 kg (22,031 lb.)	9939 kg (21,912 lb.)
Tipping Load, 40-deg. Full Turn, With Tire Deflection	9663 kg (21,303 lb.)	9273 kg (20,443 lb.)	8385 kg (18,486 lb.)	7911 kg (17,441 lb.)	7686 kg (16,945 lb.)	7437 kg (16,032 lb.)	9108 kg (20,080 lb.)	9006 kg (19,855 lb.)
Rated Operating Load, 50% Full-Turn Tipping Load, No Tire Deflection (conforms to ISO 14397-1)*	5326 kg (11,742 lb.)	5146 kg (11,345 lb.)	4565 kg (10,064 lb.)	4345 kg (9,579 lb.)	4174 kg (9,203 lb.)	4060 kg (8,790 lb.)	4997 kg (11,015 lb.)	4970 kg (10,956 lb.)
Rated Operating Load, 50% Full-Turn Tipping Load, With Tire Deflection (conforms to ISO 14397-1)*	4832 kg (10,652 lb.)	4637 kg (10,222 lb.)	4193 kg (9,243 lb.)	3956 kg (8,720 lb.)	3843 kg (8,472 lb.)	3719 kg (8,016 lb.)	4554 kg (10,040 lb.)	4503 kg (9,927 lb.)
Operating Weight	16 225 kg (35,769 lb.)	16 495 kg (36,365 lb.)	16 410 kg (36,178 lb.)	16 620 kg (36,641 lb.)	16 605 kg (36,607 lb.)	16 799 kg (37,174 lb.)	15 939 kg (35,140 lb.)	16 128 kg (35,556 lb.)

*Loader operating information is based on machine with identified linkage and standard equipment, PowerTech PVS 6068 (EPA Final Tier 4/EU Stage V) engine, ROPS cab, rear cast bumper/counterweight, transmission side-frame guards, bottom guards, standard tires, full fuel tank, and 79-kg (175 lb.) operator. This information is affected by changes in tires, ballast, and different attachments, and assumes no tire deflection per the standard ISO 14397-1 section 5. / *Rated operating capacity based on Deere attachments only.*

While general information, pictures, and descriptions are provided, some illustrations and text may include product options and accessories NOT AVAILABLE in all regions, and in some countries products and accessories may require modifications or additions to ensure compliance with the local regulations of those countries.

624 P-TIER

Dimensions and Specifications With Hi-Vis Coupler and Hook-On Construction Forks — **624 P-TIER Z-BAR / HIGH-LIFT / HIGH-LIFT PLUS / TOOL CARRIER**

624 P-TIER Z-BAR / HIGH-LIFT / HIGH-LIFT PLUS LOADERS WITH HI-VIS COUPLER AND HOOK-ON CONSTRUCTION FORKS

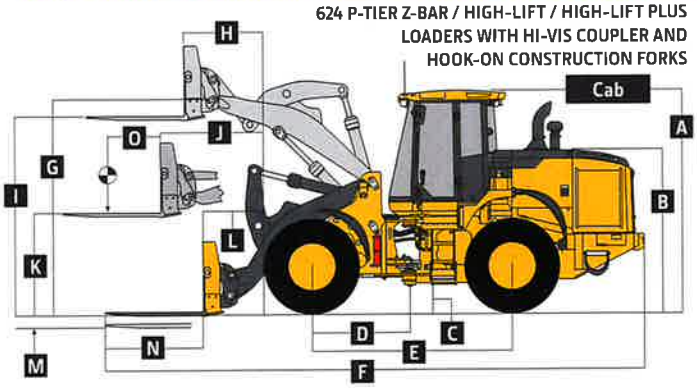

624 P-TIER TOOL-CARRIER LOADER WITH HI-VIS COUPLER AND HOOK-ON CONSTRUCTION FORKS

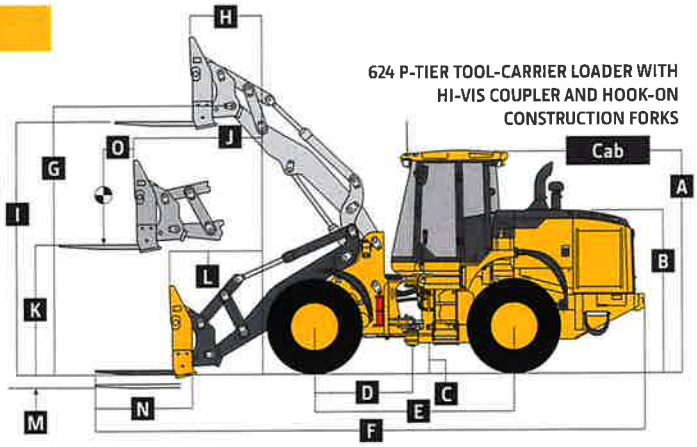

	Z-Bar 1.52-m (60 in.) tine length	*Z-Bar 1.83-m (72 in.) tine length*	*High-Lift 1.52-m (60 in.) tine length*	*High-Lift 1.83-m (72 in.) tine length*	*High-Lift Plus 1.52-m (60 in.) tine length*	*High-Lift Plus 1.83-m (72 in.) tine length*	*Tool Carrier 1.52-m (60 in.) tine length*	*Tool Carrier 1.83-m (72 in.) tine length*
Dimensions With Forks *(illustrations above)*								
A Height to Top of Cab	3.40 m (11 ft. 2 in.)	3.40 m (11 ft. 2 in.)	3.40 m (11 ft. 2 in.)	3.40 m (11 ft. 2 in.)	3.40 m (11 ft. 2 in.)	3.40 m (11 ft. 2 in.)	3.40 m (11 ft. 2 in.)	3.40 m (11 ft. 2 in.)
B Hood Height	2.46 m (8 ft. 1 in.)	2.46 m (8 ft. 1 in.)	2.46 m (8 ft. 1 in.)	2.46 m (8 ft. 1 in.)	2.46 m (8 ft. 1 in.)	2.46 m (8 ft. 1 in.)	2.46 m (8 ft. 1 in.)	2.46 m (8 ft. 1 in.)
C Ground Clearance	384 mm (15.1 in.)	384 mm (15.1 in.)	384 mm (15.1 in.)	384 mm (15.1 in.)	384 mm (15.1 in.)	384 mm (15.1 in.)	384 mm (15.1 in.)	384 mm (15.1 in.)
D Length From Centerline to Front Axle	1.52 m (5 ft. 0 in.)	1.52 m (5 ft. 0 in.)	1.52 m (5 ft. 0 in.)	1.52 m (5 ft. 0 in.)	1.52 m (5 ft. 0 in.)	1.52 m (5 ft. 0 in.)	1.52 m (5 ft. 0 in.)	1.52 m (5 ft. 0 in.)
E Wheelbase	3.09 m (10 ft. 1 in.)	3.09 m (10 ft. 1 in.)	3.09 m (10 ft. 1 in.)	3.09 m (10 ft. 1 in.)	3.09 m (10 ft. 1 in.)	3.09 m (10 ft. 1 in.)	3.09 m (10 ft. 1 in.)	3.09 m (10 ft. 1 in.)
F Overall Length, Forks on Ground	8.50 m (27 ft. 11 in.)	8.80 m (28 ft. 11 in.)	8.96 m (29 ft. 5 in.)	9.26 m (30 ft. 5 in.)	9.25 m (30 ft. 4 in.)	9.56 m (31 ft. 4 in.)	8.63 m (28 ft. 4 in.)	8.94 m (29 ft. 4 in.)
G Height to Hinge Pin, Fully Raised	3.96 m (13 ft. 0 in.)	3.96 m (13 ft. 0 in.)	4.32 m (14 ft. 2 in.)	4.32 m (14 ft. 2 in.)	4.57 m (15 ft. 0 in.)	4.57 m (15 ft. 0 in.)	4.00 m (13 ft. 1 in.)	4.00 m (13 ft. 1 in.)
H Reach, Fully Raised	0.81 m (32 in.)	0.81 m (32 in.)	0.95 m (3 ft. 1 in.)	0.95 m (3 ft. 1 in.)	0.96 m (3 ft. 2 in.)	0.96 m (3 ft. 2 in.)	1.05 m (3 ft. 5 in.)	1.05 m (3 ft. 5 in.)
I Fork Height, Fully Raised	3.64 m (11 ft. 11 in.)	3.64 m (11 ft. 11 in.)	4.00 m (13 ft. 2 in.)	4.00 m (13 ft. 2 in.)	4.25 m (13 ft. 11 in.)	4.25 m (13 ft. 11 in.)	3.72 m (12 ft. 2 in.)	3.72 m (12 ft. 2 in.)
J Maximum Reach, Fork Level	1.62 m (5 ft. 4 in.)	1.62 m (5 ft. 4 in.)	1.98 m (6 ft. 6 in.)	1.98 m (6 ft. 6 in.)	2.18 m (7 ft. 2 in.)	2.18 m (7 ft. 2 in.)	1.80 m (5 ft. 11 in.)	1.80 m (5 ft. 11 in.)
K Fork Height, Maximum Reach	1.69 m (5 ft. 7 in.)	1.69 m (5 ft. 7 in.)	1.69 m (5 ft. 7 in.)	1.69 m (5 ft. 7 in.)	1.69 m (5 ft. 7 in.)	1.69 m (5 ft. 7 in.)	1.80 m (5 ft. 11 in.)	1.80 m (5 ft. 11 in.)
L Reach, Ground Level	1.06 m (3 ft. 6 in.)	1.06 m (3 ft. 6 in.)	1.49 m (4 ft. 11 in.)	1.49 m (4 ft. 11 in.)	1.73 m (5 ft. 8 in.)	1.73 m (5 ft. 8 in.)	1.21 m (4 ft. 0 in.)	1.21 m (4 ft. 0 in.)
M Depth Below Ground	77 mm (3 in.)	77 mm (3 in.)	181 mm (7 in.)	181 mm (7 in.)	173 mm (7 in.)	173 mm (7 in.)	173 mm (7 in.)	173 mm (7 in.)
N Tine Length	1.52 m (60 in.)	1.83 m (72 in.)	1.52 m (60 in.)	1.83 m (72 in.)	1.52 m (60 in.)	1.83 m (72 in.)	1.52 m (60 in.)	1.83 m (72 in.)
O Load Position, 50% Tine Length	0.76 m (30 in.)	0.91 m (3 ft. 0 in.)	0.76 m (30 in.)	0.91 m (3 ft. 0 in.)	0.76 m (30 in.)	0.91 m (3 ft. 0 in.)	0.76 m (30 in.)	0.91 m (3 ft. 0 in.)
Specifications With Forks								
Tipping Load, Straight, No Tire Deflection	8808 kg (19,418 lb.)	8328 kg (18,360 lb.)	7736 kg (17,054 lb.)	7342 kg (16,186 lb.)	7296 kg (16,085 lb.)	6937 kg (15,293 lb.)	8505 kg (18,750 lb.)	8061 kg (17,771 lb.)
Tipping Load, Straight, With Tire Deflection	8553 kg (18,856 lb.)	8091 kg (17,838 lb.)	7515 kg (16,568 lb.)	7134 kg (15,728 lb.)	7104 kg (15,662 lb.)	6759 kg (14,901 lb.)	8283 kg (18,261 lb.)	7851 kg (17,308 lb.)
Tipping Load, 40-deg. Full Turn, No Tire Deflection	7602 kg (16,760 lb.)	7178 kg (15,825 lb.)	6639 kg (14,636 lb.)	6291 kg (13,869 lb.)	6232 kg (13,739 lb.)	5915 kg (13,041 lb.)	7350 kg (16,204 lb.)	6957 kg (15,338 lb.)
Tipping Load, 40-deg. Full Turn, With Tire Deflection	7251 kg (15,986 lb.)	6858 kg (15,119 lb.)	6330 kg (13,955 lb.)	6006 kg (13,241 lb.)	5946 kg (13,109 lb.)	5643 kg (12,441 lb.)	7023 kg (15,483 lb.)	6648 kg (14,656 lb.)
Rated Operating Load, 50% Full-Turn Tipping Load, With Tire Deflection (conforms to ISO 14397-1 and SAE J1197)*	3626 kg (7,993 lb.)	3429 kg (7,560 lb.)	3165 kg (6,978 lb.)	3003 kg (6,620 lb.)	2973 kg (6,554 lb.)	2822 kg (6,220 lb.)	3512 kg (7,742 lb.)	3324 kg (7,328 lb.)
Rated Operating Load, Rough Terrain, 60% Full-Turn Tipping Load, With Tire Deflection (conforms to EN474-3)*	4351 kg (9,591 lb.)	4115 kg (9,072 lb.)	3798 kg (8,373 lb.)	3604 kg (7,945 lb.)	3568 kg (7,865 lb.)	3386 kg (7,464 lb.)	4214 kg (9,290 lb.)	3989 kg (8,794 lb.)
Rated Operating Load, Firm and Level Ground, 80% Full-Turn Tipping Load, With Tire Deflection (conforms to EN474-3)*	5801 kg (12,789 lb.)	5486 kg (12,095 lb.)	5064 kg (11,164 lb.)	4805 kg (10,593 lb.)	4757 kg (10,487 lb.)	4514 kg (9,953 lb.)	5618 kg (12,386 lb.)	5318 kg (11,725 lb.)
Operating Weight	16 005 kg (35,286 lb.)	16 066 kg (35,420 lb.)	16 213 kg (35,744 lb.)	16 272 kg (35,875 lb.)	16 454 kg (36,274 lb.)	16 516 kg (36,412 lb.)	15 721 kg (34,659 lb.)	15 807 kg (34,849 lb.)

Loader operating information is based on machine with identified linkage and standard equipment, PowerTech PVS 6068 (EPA Final Tier 4/EU Stage V) engine, ROPS cab, rear cast bumper/counterweight, transmission side-frame guards, bottom guards, standard tires, full fuel tank, and 79-kg (175 lb.) operator. This information is affected by changes in tires, ballast, and different attachments.

**Rated operating capacity based on Deere attachments only.*

624 P-TIER

While general information, pictures, and descriptions are provided, some illustrations and text may include product options and accessories NOT AVAILABLE in all regions, and in some countries products and accessories may require modifications or additions to ensure compliance with the local regulations of those countries.

Adjustments to Operating Weights and Tipping Loads With Buckets — 624 P-TIER Z-BAR / HIGH-LIFT / HIGH-LIFT PLUS / TOOL CARRIER

Adjustments to operating weights, tipping loads, and tires are based on Z-Bar machine with pin-on 2.7-m³ (3.5 cu. yd.) general-purpose bucket with bolt-on cutting edge, ROPS cab, rear cast bumper/counterweight, transmission side-frame guards, bottom guards, standard tires, full fuel tank, and 79-kg (175 lb.) operator*

Add (+) or deduct (–) kg (lb.) as indicated for loaders with 3-piece rims	*Operating Weight*	*Tipping Load, Straight*	*Tipping Load, 40-deg. Full Turn*	*Tread Width*	*Width Over Tires*	*Vertical Height*
Michelin 20.5 R 25, 1 Star L-3 XHA2	0 kg (0 lb.)	0 kg (0 lb.)	0 kg (0 lb.)	0 mm (0 in.)	0 mm (0 in.)	0 mm (0 in.)
Bridgestone 20.5 R 25, 1 Star L-3 VJT	+4 kg (+9 lb.)	+3 kg (+6 lb.)	+3 kg (+6 lb.)	0 mm (0 in.)	+3 mm (+0.1 in.)	–41 mm (–1.6 in.)
Titan 20.5 R 25, 1 Star L-3 STL3	+8 kg (+19 lb.)	+6 kg (+13 lb.)	+5 kg (+13 lb.)	0 mm (0 in.)	–6 mm (–0.2 in.)	–7 mm (–0.3 in.)
Michelin 20.5 R 25, 1 Star L-2 XTLA	–152 kg (–335 lb.)	–110 kg (–242 lb.)	–97 kg (–214 lb.)	0 mm (0 in.)	+5 mm (+0.2 in.)	–10 mm (–0.4 in.)
Bridgestone 20.5 R 25, 1 Star L-2 VUT	–68 kg (–149 lb.)	–49 kg (–108 lb.)	–43 kg (–95 lb.)	0 mm (0 in.)	+4 mm (+0.2 in.)	–10 mm (–0.4 in.)
Titan 20.5 R 25, 1 Star L-2 TGD2	–116 kg (–255 lb.)	–84 kg (–184 lb.)	–74 kg (–162 lb.)	0 mm (0 in.)	–6 mm (–0.2 in.)	–10 mm (–0.4 in.)
Firestone 20.5-25, 16 PR L-3 SRG Bias	–276 kg (–608 lb.)	–200 kg (–440 lb.)	–176 kg (–388 lb.)	0 mm (0 in.)	+9 mm (+0.4 in.)	+6 mm (+0.2 in.)
Titan 20.5-25, 16 PR L-2 Bias	–232 kg (–511 lb.)	+168 kg (+370 lb.)	–148 kg (–326 lb.)	0 mm (0 in.)	+9 mm (+0.4 in.)	–1 mm (0 in.)
Firestone 20.5-25, 16 PR L-2 SGG Bias	–280 kg (–617 lb.)	–203 kg (–446 lb.)	–178 kg (–393 lb.)	0 mm (0 in.)	+6 mm (+0.2 in.)	+2 mm (+0.1 in.)
Michelin 600/65 R 25, 1 Star L-3T XLD[§]	+16 kg (+36 lb.)	+12 kg (+26 lb.)	+10 kg (+23 lb.)	0 mm (0 in.)	+95 mm (+3.7 in.)	–31 mm (–1.2 in.)
Michelin 20.5 R 25, L2T XSNO-PLUS	–96 kg (–212 lb.)	–69 kg (–153 lb.)	–61 kg (–135 lb.)	0 mm (0 in.)	+7 mm (+0.3 in.)	–33 mm (–1.3 in.)
Michelin 620/75R26 MegaXbib[£&]	–207 kg (–457 lb.)	–150 kg (–331 lb.)	–132 kg (–291 lb.)	+86 mm (+3.4 in.)	+147 mm (+5.8 in.)	+23 mm (+0.9 in.)
Michelin 750/65R26 MegaXbib[£&]	+37 kg (+81 lb.)	+27 kg (+58 lb.)	+23 kg (+51 lb.)	+222 mm (+8.7 in.)	+422 mm (+16.6 in.)	+36 mm (+1.4 in.)
$CaCl_2$ in 20.5-25, L-3 Rear Tires, 75% Fill	+825 kg (+1,820 lb.)	+1193 kg (+2,631 lb.)	+1051 kg (+2,318 lb.)	N/A	N/A	N/A

**May change based on vehicle configuration, weight, or tire-pressure adjustments.*

[§]$CaCl_2$ not recommended.

[£]Equipped with 1-piece rims.

[&]Requires 8-deg. rear axle stops.

Bucket Selection Guides

LOOSE MATERIALS	kg/m³	lb./cu. yd.	LOOSE MATERIALS	kg/m³	lb./cu. yd.
Chips, pulpwood	288	486	Limestone, coarse, sized	1570	2,646
Cinders (coal, ashes, slivers)	673	1,134	Limestone, mixed sizes	1682	2,835
Clay and gravel, dry	1602	2,700	Limestone, pulverized or crushed	1362	2,295
Clay, compact, solid	1746	2,943	Sand, damp	2083	3,510
Clay, dry in lump loose	1009	1,701	Sand, dry	1762	2,970
Clay, excavated in water	1282	2,160	Sand, voids, full of water	2083	3,510
Coal, anthracite, broken, loose	865	1,458	Sandstone, quarried	1314	2,214
Coal, bituminous, moderately wet	801	1,350	Shale, broken crushed	1362	2,295
Earth, common loam, dry	1218	2,052	Slag, furnace granulated	1955	3,294
Earth, mud, packed	1843	3,105	Stone or gravel, 37.5 to 87.5 mm		
Granite, broken	1538	2,592	(1.5 to 3.5 in.) size	1442	2,430
Gypsum	2275	3,834	Stone or gravel, 18.75 mm (0.75 in.) size	1602	2,700

Bucket Fill Factors

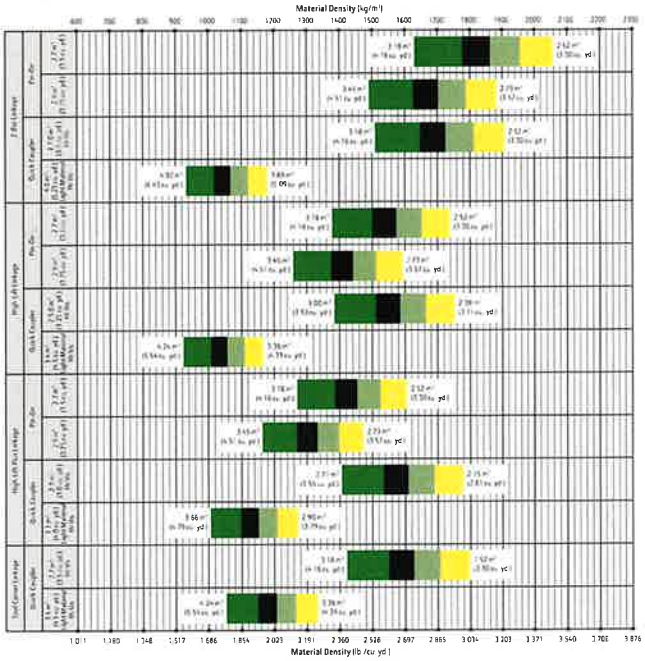

Additional equipment

Key: ● Standard ▲ Optional or special

See your John Deere dealer for further information.

624 P Engine

- ● Wet-sleeve cylinder liners
- ● Programmable auto-idle and auto shutdown
- ● Selected idle adjustment from 900–1,250 rpm
- ● Starter excessive-cranking protection
- ● Automatic engine cool-down timer
- ● Automatic derating for exceeded system temperatures
- ● Serpentine drive belt for automatic tensioner
- ● Electrical fuel-priming pump
- ● Dual-stage fuel filter and water separator
- ● 500-hour vertical spin-on oil filter
- ▲ Engine-compartment light
- ▲ Chrome exhaust stack
- ● Automatic glow plugs for cold start
- ▲ Engine-block heater (recommended for cold starts below –23 deg. C [–10 deg. F])
- ▲ Centrifugal engine air pre-cleaner
- ▲ Throttle lock

624 P Powertrain

- ● Clutch cutoff with 4 operator settings: Automatic, level ground, small slope, or steep slope
- ● Programmable maximum high gear
- ● Clutch calibration engaged from monitor
- ● 2,000-hour vertical spin-on transmission filter
- ● Transmission fill tube and sight gauge
- ● Transmission diagnostic ports
- ▲ 5-speed transmission with non-lockup torque converter
- ● 5-speed transmission with lockup torque converter
- ● Front locking differential
- ▲ Rear locking differential
- ● Brake retractors and adjusters
- ▲ Automatic differential lock
- ● Axle oil temperature sensing
- ▲ Wheel-spin control

624 P Quad-Cool™ Cooling System

- ● Heavy-duty, trash-resistant radiator and high-ambient cooling package
- ● 2-side access to all coolers
- ● Isolated from engine compartment
- ● Engine radiator
- ● Engine oil cooler
- ● Hydraulic oil cooler (oil to air)
- ● Transmission oil cooler (oil to air)
- ● Charge air cooler (air to air)
- ● Fuel cooler
- ● Coolant recovery tank
- ● Antifreeze, –37 deg. C (–34 deg. F)
- ● Cool-on-demand, hydraulically driven, swing-out fan
- ● Enclosed fan safety guard
- ▲ Automatic reversing fan drive
- ● Axle and service-brake coolers

Additional equipment *(cont.)*

Key: ● Standard ▲ Optional or special
See your John Deere dealer for further information.

624 P	Hydraulics
●	Electrohydraulic (EH) controls with soft stops and adjustable settings
●	In-cab adjustable automatic return-to-dig bucket positioner
●	In-cab adjustable automatic boom-height kickout/return to carry
●	Reservoir with sight gauge and fill strainer
●	Hydraulic diagnostic ports
●	4,000-hour in-tank filter
●	2 function — joystick with F-N-R
▲	2 function — 2-lever fingertip controls and steering column F-N-R
▲	3 function — joystick with F-N-R and integrated 3rd-function roller
▲	3 function — 3-lever fingertip controls and steering column F-N-R
▲	4 function — joystick with F-N-R and integrated 3rd/4th-function rollers
●	Programmable multifunction buttons (2)
●	Adjustable and continuous hydraulic-flow settings
●	Programmable attachment settings
▲	Ride control, automatic with monitor-adjustable speed settings
▲	Hydraulic control system for quick-coupler locking pins
▲	Hydrau™ XR cold-temperature hydraulic fluid recommended below –25 deg. C (–13 deg. F)
	Steering Systems
●	Conventional steering wheel with spinner knob
▲	Secondary steering
	Electrical
●	Solid-state electrical power-distribution system
●	Lockable master electrical-disconnect switch
●	Battery-terminal safety covers
●	By-pass start safety cover at starter
●	Remote jump-start access in battery box
●	Pre-wired for beacon/strobe light
●	Lights: Halogen driving lights with guards (2) / Front (4), rear cab (2), and rear grille (2) work lights / LED front turn signals and flashers / LED stop- and taillights
▲	Premium LED light package (all exterior lights are heavy-duty LED)
●	Programmable courtesy lights
●	Horn, electric
●	Reverse warning alarm
●	Multifunction/multi-language 178-mm (7 in.) LCD color monitor includes: Digital instruments — Analog display (hydraulic oil temperature, engine coolant temperature, transmission oil temperature, and engine oil pressure) / Digital display (engine rpm, transmission gear/direction indicator, hour meter, fuel level, diesel exhaust fluid (DEF) level, speedometer, odometer, and average fuel consumption)
▲	Multifunction/multi-language 127-mm (5 in.) LCD color monitor includes: Digital instruments — Analog display (hydraulic oil temperature, engine coolant temperature, transmission oil temperature, and engine oil pressure) / Digital display (engine rpm, transmission gear/direction indicator, hour meter, fuel level, DEF level, speedometer, odometer, and average fuel consumption)

624 P	Electrical *(continued)*
▲	Integrated cycle counter with 5 categories
●	Indicator lights: Standard and selected options / Amber caution and red stop
●	Operator-warning messages
●	Built-in diagnostics: Diagnostic-code details / Sensor values / Calibrations / Individual circuit tester
▲	Electrical corrosion-prevention package
●	Standard AM/FM/Weather-Band (WB) radio with remote auxiliary port
▲	Premium AM/FM/WB radio with Bluetooth®, remote auxiliary port, and remote USB port (premium cab only)
●	24- to 12-volt, 8-amp converter and cab power ports (3)
▲	24- to 12-volt, 15- or 30-amp converter and cab power ports (3)
	Operator's Station
●	Standard cab with air conditioning/heater (ROPS/FOPS Level 1, isolation mounted)
▲	Premium cab with air conditioning/heater (ROPS/FOPS Level 1, isolation mounted)
▲	Automatic temperature control (premium cab only)
●	Rear window defrost vent
●	Keyless start with multiple security modes
●	Sealed-switch module with function indicators
●	Seat with backrest extension, deep foam, fabric cover, and adjustable air suspension
▲	Premium seat with high-wide back- and headrest extension, heated and ventilated, leather/fabric cover, and adjustable heavy-duty air suspension
●	Hydraulic controls integrated to seat
●	High-visibility, bright-orange seat belt, 76 mm (3 in.), with retractor
▲	Seat-belt minder monitoring with JDLink™ and seat-belt indicator beacon
●	Cup holder and cup/Thermos® holder with retaining strap
●	Lunch-box/cooler holder with tie-down brackets
●	Coat hook
●	LED dome and reading light
●	Rubber floor mat
●	Dual-tilt steering column
●	Operator's manual storage compartment
●	Outside (2) and inside (1) rearview mirrors
▲	Heated outside mirrors with convex lens
▲	In-cab adjustable heated outside mirrors with convex lens (premium cab only)
●	Left-side operator-station access
●	Fall-arrest system anchor points tested to 2268 kg (5,000 lb.) on front of cab
●	Slip-resistant steps and ergonomic handholds
●	Pull-down front sun visor
●	Front and rear intermittent windshield wipers and washers
▲	Powered cab air pre-cleaner
▲	Beacon bracket only

624 P	Operator's Station *(continued)*
▲	Beacon bracket with strobe beacon
●	Rearview camera
▲	Rearview camera with radar object-detection system
▲	Dedicated 178-mm (7 in.) rear camera display
●	Payload scale ready
▲	Fire extinguisher
	Loader Linkage
●	Z-Bar loader linkage (parallel lift)
▲	High-Lift Z-Bar loader linkage (parallel lift)
▲	High-Lift Plus Z-Bar loader linkage (parallel lift)
▲	Tool Carrier linkage for visibility (parallel lift)
	Buckets and Attachments
▲	Full line of Deere pin-on buckets, coupler buckets, and forks
▲	John Deere hydraulic coupler that accepts JRB-pattern attachments
▲	Hi-Vis hydraulic coupler that accepts Euro-pattern attachments (ISO)
	Overall Vehicle
●	JDLink wireless communication system (available in specific countries; see your dealer for details)
●	NeverGrease™ rear-axle oscillation
●	Front and rear tie-downs
●	Rear cast bumper/counterweight with rear hitch and locking pin
●	Articulation locking bar
●	Loader boom service locking bar
●	40-deg. steering articulation to each side with rubber-cushion stops on frame
●	Vandal protection with lockable engine enclosures, right counterweight storage, and filler access for radiator/fuel/DEF/hydraulic transmission
●	Left-side service steps and handholds
▲	Right-side service steps and handrails
▲	Left-side close-mounted steps
●	Storage compartment
●	Fuel-tank fill strainer
●	Heavy-duty fuel-tank guard
●	Ground-level fuel and DEF fill
●	Same-side ground-level daily servicing
●	20.5R25 tires on 3-piece rims
▲	Ag material-handling package
▲	Waste handler (Z-Bar and High-Lift)
▲	Environmental drains and sample ports for engine, transmission, hydraulic oils, and engine coolant
●	Fenders, front narrow
▲	Fenders, front full width
▲	Fenders, front and rear full width
▲	Fenders, front and rear full width with mud flaps
▲	Less wheels and tires with axle stops
▲	Rims less tires
▲	Transmission side-frame and bottom guards
▲	Special guarding for waste applications
▲	Lift eyes
▲	License-plate bracket and light

While general information, pictures, and descriptions are provided, some illustrations and text may include product options and accessories NOT AVAILABLE in all regions, and in some countries products and accessories may require modifications or additions to ensure compliance with the local regulations of those countries.

Net engine power is with standard equipment including air cleaner, exhaust system, alternator, and cooling fan at test conditions per ISO 9249. No derating is required up to 3050-m (10,000 ft.) altitude. Specifications and design subject to change without notice. Specifications with the exception of bucket capacity are in accordance with all applicable ISO standards. Except where otherwise noted, these specifications are based on a unit with applicable linkage and standard equipment. ROPS cab, rear cast bumper/counterweight, transmission side-frame guards, bottom guards, standard tires, full fuel tank, and 79-kg (175 lb.) operator.

JOHN DEERE

BID SUMMARY PAGE

BIDDEFORD MUNICIPAL AIRPORT
BIDDEFORD, MAINE

PURCHASE SNOW REMOVAL EQUIPMENT (SRE)

MaineDOT PIN: XXXXXX.XX (PENDING)

SCHEDULE OF UNIT PRICES

BASE BID

IMPORTANT: BIDDERS MUST BID ON ALL ITEMS.

ITEM NO.	ESTIMATED QUANTITY	ITEM DESCRIPTION WITH UNIT BID PRICE WRITTEN IN WORDS	UNIT PRICE		AMOUNT	
			Dollars	Cents	Dollars	Cents
M-002-1	1 LS	Front-End Loader for the unit price per Lump Sum of: Two hundred forty-seven thousand, five hundred and forty dollars, zero cents. _____ _____ dollars and _____ cents.	247,540.00	0.00	247,540.00	0.00
M-003-1	1 LS	Attachment: Rotary Plow (Snow Blower) for the unit price per Lump Sum of: One hundred eighty-five thousand, nine hundred and seventy -eight dollars, no cents. _____ _____ dollars and _____ cents.	185,978.00	0.00	185,978.00	0.00
M-003-2	1 LS	Attachment: Ramp Plow (Snow Pusher) for the unit price per Lump Sum of: Forty-three thousand, eight hundred and ten dollars, no cents. _____ _____ dollars and _____ cents.	43,810.00	0.00	43,810.00	0.00

Beauregard (CASE) = 433,518 without snow Pusher

BASE BID SUMMARY

TOTAL BASE BID:

_____
(words)

Four hundred seventy-seven thousand, three hundred and twenty-eight _____ dollars

And zero_____cents ($ $477,328.00_____).
(figures)

Transfer this amount to Projectdog.com GC E-Bid "Total Base Bid".

The Owner reserves the right to delete any item of work in whole or in part, in order to meet the available funding.

Amounts are to be shown in both words and figures. In case of Discrepancy, the amount shown in words will govern.

The above unit prices shall include all labor, materials, overhead, profit, insurance, etc., to cover the finished work of the several kinds called for.

CASE CONSTRUCTION

721G

Z-BAR/XT/XR WHEEL LOADER

TIER 4 FINAL CERTIFIED

ENGINE

Make	FPT
Model	F4HFE613T
Emissions Certification	Tier 4 Final
Emissions Technology	SCR/DOC
Type	4-stroke, turbocharged and air-to-air cooled
Cylinders	6-cylinder in-line
Bore/Stroke	4.09 x 5.20 in (104 x 132 mm)
Displacement	411 in³ (6.7 L)
Fuel	#2 Diesel, #1 and #2 mixture permitted for cold temperatures
Fuel injection	Direct injection – electronic
Fuel filter	Replaceable
Fuel pump	Bosch CR/CP3
Gradeability:	
Side-to-side	35°
Fore and aft	35°
Air filter	Dry type elements w/ warning restriction indicator
Mid-mount cooling module:	Mid-mount air/water
Fan – hydraulic driven:	
Style	8 blade puller
Diameter	32 in (813 mm)
Water pump	Integral
Engine oil pump operating angle ratings:	
Side-to-side	35°
Fore and aft	35°
Oil filtration	Replaceable
Engine speeds	RPM
Rated – full load	2000
Horsepower:	
Maximum Power Mode:	
Peak gross @ 2000 RPM	195 hp (145 kW)
Net rated @ 2000 RPM	179 hp (133 kW)
Peak net @ 2000 RPM	179 hp (133 kW)
Standard Power Mode:	
Peak gross @ 1700 RPM	176 hp (131 kW)
Net rated @ 2000 RPM	144 hp (107 kW)
Peak net @ 1600 RPM	163 hp (121 kW)
Economy Power Mode:	
Peak gross @ 1400 RPM	147 hp (109 kW)
Net rated @ 2000 RPM	121 hp (90 kW)
Peak net @ 1400 RPM	138 hp (103 kW)
Torque – peak:	
Maximum Power Mode:	
Gross @ 1300 RPM	701 lb·ft (950 N·m)
Net @ 1300 RPM	674 lb·ft (914 N·m)
Standard Power Mode:	
Gross @ 1300 RPM	620 lb·ft (841 N·m)
Net @ 1300 RPM	594 lb·ft (805 N·m)
Economy Power Mode:	
Gross @ 1200 RPM	589 lb·ft (799 N·m)
Net @ 1200 RPM	567 lb·ft (768 N·m)
Torque rise:	
Maximum power range	37%

NOTE: Gross horsepower and torque per SAE J1995. Net horsepower and torque per SAE J1349.

DRIVETRAIN

Transmission:
4F/3R Proportional w/ Electronic Control Module torque sensing autoshift/manual shift and modulation

Gears	Helical cut
Gear ratios – 4-speed	Forward/Reverse
1st	3.745/3.551
2nd	2.184/2.071
3rd	1.072/1.017
4th	0.636/ —
Gear ratios – 5-speed	Forward/Reverse
1st	3.921/3.718
2nd	2.255/2.138
3rd	1.466/0.894
4th	0.942/ —
5th	0.613/ —
Torque converter:	
Stall ratio – 4-speed	2.81:1
Stall ratio – 5-speed	2.42:1
Differential:	
Limited slip w/ 30% transfer on front and rear axles	
Rear axle oscillation	24° total
Front and rear axles:	
Differential ratio	3.4/3.2
Planetary ratio	6.0/6.4
Final axle ratio	20.2/20.4
Heavy-duty axles – optional:	
Front axle equipped w/ locking differential	
Rear axle equipped w/ open differential	
Planetaries	Outboard
Service brakes:	
Hydraulically actuated, maintenance-free, multiple wet disc w/ accumulator to all four wheels	
Brake surface area:	
Front hub – each	600 in² (0.387 m²)
Rear hub – each	600 in² (0.387 m²)
Parking brakes:	
Spring-applied hydraulic release disc on transmission output shaft neutralizes power flow to wheels when engaged	

Travel speeds – 4-speed transmission:

	Forward mph (kph)	Reverse mph (kph)
1st	4.7 (7.6)	5.0 (8.0)
2nd	7.9 (12.8)	8.4 (13.4)
3rd	15.2 (24.5)	15.9 (25.7)
4th	23.5 (37.8)	—

Travel speeds – 5-speed transmission:

	Forward mph (kph)	Reverse mph (kph)
1st	4.5 (7.2)	4.9 (7.9)
2nd	7.8 (12.6)	8.4 (13.5)
3rd	11.8 (19.0)	19.3 (31.1)
4th	18.3 (29.5)	—
5th	25.0 (40.0)	—

NOTE: Travel speeds at full engine throttle w/ 20.5 x 25 L3 tires.

ELECTRICAL

Voltage	24 Volts, negative ground
Alternator	120 amp
Batteries (2)	12-volt

OPERATOR ENVIRONMENT

ROPS cab AC w/ heat; Key start; Articulated power steering w/ tilt column; Fully adjustable, suspension seat; Foot throttle; Single lever loader control w/ fully adjustable wrist rest, 2 cup holders; 2 interior rear view mirrors; 2 in (51 mm) retractable seat belt; Multiple storage trays; Single brake pedal; F/N/R shuttle switch; External rearview mirrors; Pressurized air filtering; Anti-glare window strip; Front and Rear Defroster; Side window, partial/fully open; 2 Dome lights; Wipers, rear and intermittent front; Windshield washers, front and rear; Rubber floor mat; Horn.

Displays/Gauges:
- Digital:
  - Transmission oil temperature; Hydraulic oil temperature; Fuel Level; Engine coolant temperature; DEF level.
- LCD screen:
  - Hour meter; Engine speed; Travel speed; Time; Automatic transmission indication; Current gear selection; FNR indication; DeClutch indication; Engine mode indication; Trip computer A/B; Fuel consumption; Multiple languages, Metric/English; Engine diagnostics; Transmission diagnostics; Warning prompts; Error reporting; Diff. lock*; DEF gauge.

Audible/Visual alarms:
- Warning lights:
  - Four-way flashers and turn signals; Brake pressure; Lamp/high beam indication; Grid heater*.
- Caution warnings:
  - Parking brake; Coolant temperature; Hydraulic oil temperature; Transmission oil temperature; Air filter; Transmission filter; Hydraulic filter; Alternator; Low fuel.

Critical warnings:
Engine oil pressure; Brake pressure; Steering pressure – w/ aux. steering*; Coolant temperature; Hydraulic oil temperature; Transmission oil temperature.
Backup alarm
Maintenance reminders:
Cab air filter; Engine oil filter; Fuel pre-filter; DEF tank vent filter; SCR supply filter; Hydraulic oil and filter; Engine air filter; Engine coolant drive belt; Cab recirculation filter; Engine breather filter; Transmission breather; Front and rear axle fluid; SCR supply module filter.

NOTE: *If equipped w/ option.

OPERATING WEIGHT

Z-Bar
Unit equipped w/ 3.25 yd³ (2.5 m³) MD pin on w/ bolt on edge; 20.5-R25 L3 Radial tires; ROPS cab w/ heater and A/C; Std. battery; Heavy counterweight – 2,764 lb (1 254 kg); Front and rear fenders; Lights; Full fuel/urea; 165 lb (75 kg) operator:
32,492 lb (14 738 kg)

XT
Unit equipped w/ 3.0 yd³ (2.3 m³) CNH GP w/ BOE and CNH JRB coupler w/ edge; 20.5-R25 L3 Radial tires; ROPS cab w/ heater and A/C; Std. battery; Heavy counterweight – 2,764 lb (1 254 kg); Front and rear fenders; Lights; Full fuel/urea; 165 lb (75 kg) operator:
33,392 lb (15 146 kg)

XR
Unit equipped w/ 3.0 yd³ (2.3 m³) pin on bucket w/ bolt on edge; 20.5-R25 L3 Radial tires; ROPS cab w/ heater and A/C; Std. battery; Heavy counterweight – 2,764 lb (1 254 kg); Front and rear fenders; Lights; Full fuel/urea; 165 lb (75 kg) operator:
32,851 lb (14 901 kg)

HYDRAULICS

Main pump – steering/implement:
Closed center pressure/flow compensated

Tandem variable displacement – load-sensing:

Max. rated flow P1:	31.6 gpm @ 2000 RPM (120 L/min @ 2000 RPM)
Max. rated flow P2:	22.6 gpm @ 2000 RPM (86 L/min @ 2000 RPM)

Loader control valve:
Closed-center, sectional 2, 3 or 4-function w/ control for lift, tilt and auxiliary hydraulics

Loader auxiliary steering:
Hydraulic orbital center-pivot articulating w/ on-demand oil flow

High pressure standby:

Implement	3,625 psi (25 000 kPa)
Steering	3,500 psi (24 132 kPa)

Filtration:
Filtered vent w/ relief on hydraulic reservoir, maintains 3-5 psi on reservoir, 10-micron, return filter furnishes only clean oil to all components of the system

SERVICE CAPACITIES

Fuel tank	65.0 gal (246.0 L)
DEF tank – Diesel Exhaust Fluid:	
Usable capacity	9.8 gal (37.1 L)
Total	15.6 gal (58.9 L)
Hydraulic system:	
Reservoir	24.0 gal (90.8 L)
Total	47.0 gal (177.8 L)
Transmission:	
Service w/ filter	9.0 gal (34.0 L)
Front and rear axle:	
Front axle	37.0 qt (35.0 L)
Rear axle	24.3 qt (23.0 L)
Front and rear axle – optional:	
Front axle	37.0 qt (35.0 L)
Rear axle	37.0 qt (35.0 L)
Engine oil w/ filter	16.0 qt (15.1 L)
Cooling system	30.0 qt (28.4 L)

OTHER SPECIFICATIONS

Lift cylinder:	
Bore diameter	4.8 in (121 mm)
Rod diameter	3.0 in (76 mm)
Stroke	32.6 in (828 mm)
Dump cylinder – Z-Bar and XR:	
Bore diameter	5.8 in (146 mm)
Rod diameter	3.0 in (76 mm)
Stroke	24.8 in (629 mm)
Dump cylinder – XT:	
Bore diameter	4.5 in (114 mm)
Rod diameter	2.3 in (57 mm)
Stroke	33.7 in (857 mm)

Loader:
Z-Bar loader linkage; Single control for lift and tilt; Positive hold float; Automatic return-to-dig; Automatic height control; Automatic return-to-travel; Brake pedal transmission disconnect; Bucket position indicator on bucket.

Cycle time:	
Raise w/ rated bucket load:	
Z-Bar	5.2 sec
XR	5.2 sec
XT	5.2 sec
Dump w/ rated bucket load:	
Z-Bar	1.2 sec
XR	1.2 sec
XT	1.3 sec
Float down:	
Z-Bar	2.4 sec
XR	2.4 sec
XT	2.4 sec
Sound level in Cab (LpA)	68 dB(A)
Exterior sound level (LwA)	103 dB(A)

NOTE: Sound level data tested in accordance with ISO6395, 6396, 3744.

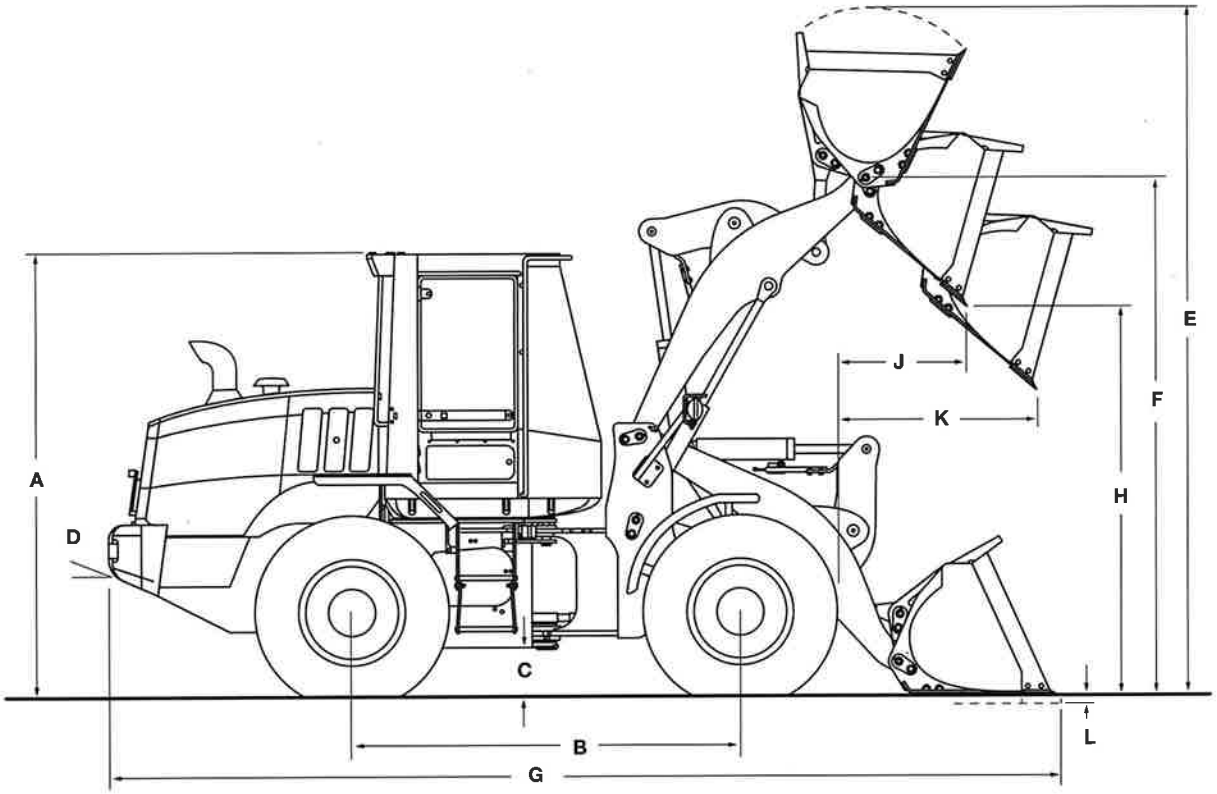

Line drawings are for illustrative purpose only and may not be exact representation of unit.

DIMENSIONS

A. Height to top of ROPS cab	133.0 in (3 378 mm)
Height to drawbar	43.5 in (1 105 mm)
B. Wheelbase	128.1 in (3 253 mm)
C. Ground clearance	15.1 in (384 mm)
D. Angle of departure	29°
Width:	
Overall* without bucket	100.7 in (2 558 mm)
Centerline tread	79.9 in (2 030 mm)
Turning radius* – outside	226.3 in (5 748 mm)
Turning angle:	
From center	40°
Total angle	80°
Rear axle oscillation – total	24°

NOTE: *Dimensions taken with 20.5-R25 L3 Radial tires. Additional dimensions on pages 4 through 8.

WEIGHT ADJUSTMENTS

Select Options	Weight Adjustment	Tipping Load Adjustment Straight: Deflected*	Tipping Load Adjustment 40° Turn: Deflected*
20.5 x 25 16 ply L2 Bias tires	-564 lb (-256 kg)	-565 lb (-256 kg)	-810 lb (-367 kg)
20.5 x 25 16 ply L3 Bias tires	-536 lb (-243 kg)	+99 lb (+45 kg)	+184 lb (+83 kg)
20.5-R25 L2 Radial tires	-256 lb (-116 kg)	-262 lb (-119 kg)	-163 lb (-74 kg)
20.5-R25 Snow Radial Tires	-132 lb (-60 kg)	-169 lb (-77 kg)	-80 lb (-36 kg)
20.5-R25 Solid Tires Req. Min Cwt, Lock Diff Axles, Ltd Spd Controller	+5,545 lb (+2 515 kg)	+5,028 lb (+2 281 kg)	+4,744 lb (+2 152 kg)
Light Counterweight	-545 lb (-247 kg)	-1,129 lb (-512 kg)	-878 lb (-398 kg)

NOTE: Unit equipped with Z-Bar loader arms, 3.25 yd^3 (2.5 m^3) pin on bucket with bolt-on edge, 20.5-R25 L3 Radial tires, ROPS cab with heater and air conditioner, heavy counterweight, heavy-duty batteries, front and rear fenders, full fuel and 165 lb (75 kg) operator. Adjust select options from rated weight.
*Tipping loads: ISO 14397-1 Deflected Tires.

PERFORMANCE SPECS

721G Z-Bar*		3.0 yd³ (2.3 m³) Bucket with Bolt-on Edge - Pin On	2.8 yd³ (2.1 m³) Bucket with Teeth - Pin On	3.25 yd³ (2.5 m³) Bucket with Bolt-on Edge - Pin On
Operating weight		32,403 lb (14 698 kg)	32,301 lb (14 652 kg)	32,492 lb (14 738 kg)
E. Operating height – fully raised with spillguard		203.4 in (5 165 mm)	203.4 in (5 165 mm)	205.7 in (5 225 mm)
F. Hinge pin height – fully raised		156.5 in (3 976 mm)	156.5 in (3 976 mm)	156.5 in (3 976 mm)
G. Overall length – bucket level on ground		299.4 in (7 606 mm)	305.2 in (7 753 mm)	301.6 in (7 660 mm)
Dump angle – fully raised		50°	50°	50°
H. Dump height – fully raised, 45° dump		116.6 in (2 962 mm)	112.9 in (2 868 mm)	115.2 in (2 926 mm)
J. Bucket reach – fully raised, 45° dump		42.6 in (1 081 mm)	47.1 in (1 196 mm)	44.2 in (1 123 mm)
K. Bucket reach – 7 ft 0 in (2.13 m) height, 45° dump		64.1 in (1 628 mm)	66.9 in (1 700 mm)	65.1 in (1 654 mm)
L. Dig depth		3.0 in (77 mm)	3.0 in (75 mm)	3.0 in (77 mm)
Operating load – ISO Rigid Tires		11,897 lb (5 397 kg)	12,150 lb (5 511 kg)	11,825 lb (5 364 kg)
Operating load – ISO Deflected Tires		10,373 lb (4 705 kg)	10,592 lb (4 804 kg)	10,294 lb (4 669 kg)
Maximum material density – ISO Rigid Tires		3,966 lb/yd³ (2 353 kg/m³)	4,339 lb/yd³ (2 575 kg/m³)	3,639 lb/yd³ (2 159 kg/m³)
Maximum material density – ISO Deflected Tires		3,458 lb/yd³ (2 052 kg/m³)	3,783 lb/yd³ (2 245 kg/m³)	3,167 lb/yd³ (1 879 kg/m³)
Tipping load – ISO Rigid Tires:	Straight	27,355 lb (12 408 kg)	27,916 lb (12 663 kg)	27,204 lb (12 340 kg)
	40° turn	23,795 lb (10 793 kg)	24,300 lb (11 022 kg)	23,651 lb (10 728 kg)
Tipping load – ISO Deflected Tires:	Straight	25,490 lb (11 562 kg)	26,006 lb (11 796 kg)	25,330 lb (11 489 kg)
	40° turn	20,745 lb (9 410 kg)	21,184 lb (9 609 kg)	20,587 lb (9 338 kg)
Lift capacity:	Full height	16,135 lb (7 319 kg)	16,247 lb (7 369 kg)	16,046 lb (7 278 kg)
	Ground	30,124 lb (13 664 kg)	30,568 lb (13 865 kg)	29,913 lb (13 568 kg)
Breakout force with tilt cylinder		33,810 lb (15 336 kg)	36,573 lb (16 589 kg)	32,158 lb (14 587 kg)
Loader clearance circle with bucket		496.3 in (12 606 mm)	500.0 in (12 701 mm)	497.5 in (12 636 mm)

721G XR		3.0 yd³ (2.3 m³) Bucket with Bolt-on Edge - Pin On	2.8 yd³ (2.1 m³) Bucket with Teeth - Pin On	3.25 yd³ (2.5 m³) Bucket with Bolt-on Edge - Pin On
Operating weight		32,851 lb (14 901 kg)	32,748 lb (14 854 kg)	32,939 lb (14 941 kg)
E. Operating height – fully raised with spillguard		218.9 in (5 560 mm)	218.9 in (5 560 mm)	221.2 in (5 620 mm)
F. Hinge pin height – fully raised		172.1 in (4 371 mm)	172.1 in (4 371 mm)	172.1 in (4 370 mm)
G. Overall length – bucket level on ground		313.5 in (7 963 mm)	319.3 in (8 111 mm)	315.7 in (8 018 mm)
Dump angle – fully raised		50°	50°	50°
H. Dump height – fully raised, 45° dump		132.1 in (3 356 mm)	128.4 in (3 262 mm)	130.8 in (3 321 mm)
J. Bucket reach – fully raised, 45° dump		42.6 in (1 082 mm)	47.1 in (1 197 mm)	44.2 in (1 124 mm)
K. Bucket reach – 7 ft 0 in (2.13 m) height, 45° dump		76.2 in (1 937 mm)	79.3 in (2 014 mm)	77.3 in (1 965 mm)
L. Dig depth		3.1 in (79 mm)	3.0 in (77 mm)	3.1 in (79 mm)
Operating load – ISO Rigid Tires		9,983 lb (4 528 kg)	10,187 lb (4 621 kg)	9,915 lb (4 497 kg)
Operating load – ISO Deflected Tires		8,805 lb (3 994 kg)	8,987 lb (4 076 kg)	8,732 lb (3 961 kg)
Maximum material density – ISO Rigid Tires		3,328 lb/yd³ (1 975 kg/m³)	3,638 lb/yd³ (2 159 kg/m³)	3,051 lb/yd³ (1 810 kg/m³)
Maximum material density – ISO Deflected Tires		2,935 lb/yd³ (1 742 kg/m³)	3,210 lb/yd³ (1 904 kg/m³)	2,687 lb/yd³ (1 594 kg/m³)
Tipping load – ISO Rigid Tires:	Straight	23,078 lb (10 468 kg)	23,527 lb (10 672 kg)	22,935 lb (10 403 kg)
	40° turn	19,967 lb (9 057 kg)	20,373 lb (9 241 kg)	19,830 lb (8 995 kg)
Tipping load - ISO Deflected Tires:	Straight	21,678 lb (9 833 kg)	22,099 lb (10 024 kg)	21,528 lb (9 765 kg)
	40° turn	17,610 lb (7 988 kg)	17,974 lb (8 153 kg)	17,463 lb (7 921 kg)
Lift capacity:	Full height	15,025 lb (6 815 kg)	15,135 lb (6 865 kg)	14,936 lb (6 775 kg)
	Ground	25,085 lb (11 378 kg)	25,444 lb (11 541 kg)	24,897 lb (11 293 kg)
Breakout force with tilt cylinder		33,706 lb (15 289 kg)	36,459 lb (16 537 kg)	32,058 lb (14 541 kg)
Loader clearance circle with bucket		509.7 in (12 945 mm)	513.9 in (13 052 mm)	511.0 in (12 980 mm)

721G		Z-Bar/XR	Z-Bar/XR	Z-Bar/XR
Maximum rollback:	Ground	40°/37°	40°/37°	40°/37°
	Carry position	44°/43°	44°/43°	44°/43°
	@ Full height	57°/57°	57°/57°	57°/57°
Maximum grading angle with bucket – back dragging		58°/58°	59°/58°	58°/58°
SAE bucket capacity – struck		2.56 yd³ (1.96 m³)	2.42 yd³ (1.85 m³)	2.78 yd³ (2.13 m³)
Heaped		3.00 yd³ (2.29 m³)	2.80 yd³ (2.14 m³)	3.25 yd³ (2.48 m³)
Bucket width – outside		106.3 in (2 700 mm)	106.8 in (2 713 mm)	106.3 in (2 700 mm)
Bucket weight		2,540 lb (1 152 kg)	2,438 lb (1 106 kg)	2,629 lb (1 192 kg)

PERFORMANCE SPECS

721G Z-Bar*		3.0 yd³ (2.3 m³) Bucket with Teeth - Pin On	3.5 yd³ (2.7 m³) Bucket with Bolt-on Edge - Pin On	3.5 yd³ (2.7 m³) Bucket with Bolt-on Edge & Grapple - Pin On
Operating weight		32,390 lb (14 692 kg)	32,633 lb (14 802 kg)	34,425 lb (15 615 kg)
E. Operating height – fully raised with spillguard		205.7 in (5 225 mm)	208.4 in (5 294 mm)	273.2 in (6 941 mm)
F. Hinge pin height – fully raised		156.5 in (3 976 mm)	156.5 in (3 976 mm)	156.4 in (3 973 mm)
G. Overall length – bucket level on ground		307.3 in (7 805 mm)	304.0 in (7 721 mm)	304.0 in (7 721 mm)
Dump angle – fully raised		50°	50°	50°
H. Dump height – fully raised, 45° dump		111.6 in (2 834 mm)	113.7 in (2 888 mm)	113.6 in (2 886 mm)
J. Bucket reach – fully raised, 45° dump		48.6 in (1 236 mm)	46.0 in (1 169 mm)	46.0 in (1 167 mm)
K. Bucket reach – 7 ft 0 in (2.13 m) height, 45° dump		67.8 in (1 723 mm)	66.2 in (1 682 mm)	66.1 in (1 680 mm)
L. Dig depth		3.0 in (75 mm)	3.0 in (77 mm)	3.1 in (80 mm)
Operating load – ISO Rigid Tires		12,005 lb (5 445 kg)	11,711 lb (5 312 kg)	10,837 lb (4 915 kg)
Operating load – ISO Deflected Tires		10,450 lb (4 740 kg)	10,174 lb (4 615 kg)	9,269 lb (4 204 kg)
Maximum material density – ISO Rigid Tires		4,002 lb/yd³ (2 374 kg/m³)	3,346 lb/yd³ (1 985 kg/m³)	3,096 lb/yd³ (1 837 kg/m³)
Maximum material density – ISO Deflected Tires		3,483 lb/yd³ (2 067 kg/m³)	2,907 lb/yd³ (1 725 kg/m³)	2,648 lb/yd³ (1 571 kg/m³)
Tipping load - ISO Rigid Tires:	Straight	27,597 lb (12 518 kg)	26,963 lb (12 230 kg)	25,214 lb (11 437 kg)
	40° turn	24,010 lb (10 891 kg)	23,423 lb (10 624 kg)	21,674 lb (9 831 kg)
Tipping load - ISO Deflected Tires:	Straight	25,691 lb (11 653 kg)	25,081 lb (11 377 kg)	23,297 lb (10 567 kg)
	40° turn	20,901 lb (9 480 kg)	20,348 lb (9 230 kg)	18,537 lb (8 408 kg)
Lift capacity:	Full height	16,155 lb (7 328 kg)	15,904 lb (7 214 kg)	14,116 lb (6 403 kg)
	Ground	30,217 lb (13 706 kg)	29,622 lb (13 436 kg)	27,759 lb (12 591 kg)
Breakout force with tilt cylinder		34,749 lb (15 762 kg)	30,485 lb (13 828 kg)	28,621 lb (12 982 kg)
Loader clearance circle with bucket		501.2 in (12 731 mm)	498.8 in (12 671 mm)	498.8 in (12 670 mm)

721G XR		3.0 yd³ (2.3 m³) Bucket with Teeth - Pin On	3.5 yd³ (2.7 m³) Bucket with Bolt-on Edge - Pin On	3.5 yd³ (2.7 m³) Bucket with Bolt-on Edge & Grapple - Pin On
Operating weight		32,837 lb (14 895 kg)	33,080 lb (15 005 kg)	34,872 lb (15 818 kg)
E. Operating height – fully raised with spillguard		221.2 in (5 620 mm)	224.0 in (5 689 mm)	288.8 in (7 335 mm)
F. Hinge pin height – fully raised		172.1 in (4 371 mm)	172.1 in (4 370 mm)	172.0 in (4 368 mm)
G. Overall length – bucket level on ground		321.4 in (8 163 mm)	318.1 in (8 078 mm)	318.0 in (8 078 mm)
Dump angle – fully raised		50°	50°	50°
H. Dump height – fully raised, 45° dump		127.1 in (3 229 mm)	129.2 in (3 282 mm)	129.2 in (3 281 mm)
J. Bucket reach – fully raised, 45° dump		48.7 in (1 237 mm)	46.1 in (1 170 mm)	46.0 in (1 168 mm)
K. Bucket reach – 7 ft 0 in (2.13 m) height, 45° dump		80.3 in (2 039 mm)	78.5 in (1 995 mm)	78.5 in (1 993 mm)
L. Dig depth		3.1 in (78 mm)	3.1 in (80 mm)	3.2 in (82 mm)
Operating load – ISO Rigid Tires		10,064 lb (4 565 kg)	9,809 lb (4 449 kg)	8,926 lb (4 049 kg)
Operating load – ISO Deflected Tires		8,865 lb (4 021 kg)	8,621 lb (3 911 kg)	7,713 lb (3 499 kg)
Maximum material density – ISO Rigid Tires		3,355 lb/yd³ (1 991 kg/m³)	2,803 lb/yd³ (1 663 kg/m³)	2,550 lb/yd³ (1 513 kg/m³)
Maximum material density – ISO Deflected Tires		2,955 lb/yd³ (1 753 kg/m³)	2,463 lb/yd³ (1 462 kg/m³)	2,204 lb/yd³ (1 308 kg/m³)
Tipping load – ISO Rigid Tires:	Straight	23,258 lb (10 550 kg)	22,712 lb (10 302 kg)	20,946 lb (9 501 kg)
	40° turn	20,127 lb (9 130 kg)	19,619 lb (8 899 kg)	17,853 lb (8 098 kg)
Tipping load – ISO Deflected Tires:	Straight	21,831 lb (9 902 kg)	21,299 lb (9 661 kg)	19,506 lb (8 848 kg)
	40° turn	17,729 lb (8 042 kg)	17,243 lb (7 821 kg)	15,426 lb (6 997 kg)
Lift capacity:	Full height	15,044 lb (6 824 kg)	14,794 lb (6 710 kg)	13,005 lb (5 899 kg)
	Ground	25,151 lb (11 408 kg)	24,637 lb (11 175 kg)	22,768 lb (10 327 kg)
Breakout force with tilt cylinder		34,641 lb (15 713 kg)	30,391 lb (13 785 kg)	28,529 lb (12 940 kg)
Loader clearance circle with bucket		515.2 in (13 087 mm)	512.6 in (13 020 mm)	512.5 in (13 019 mm)

721G		Z-Bar/XR	Z-Bar/XR	Z-Bar/XR
Maximum rollback:	Ground	40°/37°	40°/37°	40°/37°
	Carry position	44°/43°	44°/43°	44°/43°
	@ Full height	57°/57°	57°/57°	57°/57°
Maximum grading angle with bucket – back dragging		59°/59°	59°/58°	59°/58°
SAE bucket capacity – struck		2.62 yd³ (2.00 m³)	3.00 yd³ (2.29 m³)	3.00 yd³ (2.29 m³)
Heaped		3.00 yd³ (2.29 m³)	3.50 yd³ (2.68 m³)	3.50 yd³ (2.68 m³)
Bucket width – outside		106.8 in (2 713 mm)	106.3 in (2 700 mm)	106.3 in (2 700 mm)
Bucket weight		2,526 lb (1 146 kg)	2,769 lb (1 256 kg)	4,561 lb (2 069 kg)

PERFORMANCE SPECS

721G Z-Bar*		5.5 yd³ (4.2 m³) Bucket with Bolt-on Edge - Pin On	3.0 yd³ (2.3 m³) Bucket with Bolt-on Edge - ACS Coupler	2.8 yd³ (2.14 m³) Bucket with Teeth - ACS Coupler
Operating weight		33,265 lb (15 089 kg)	33,414 lb (15 156 kg)	33,312 lb (15 110 kg)
E. Operating height – fully raised with spillguard		223.0 in (5 665 mm)	208.6 in (5 298 mm)	208.6 in (5 298 mm)
F. Hinge pin height – fully raised		156.5 in (3 975 mm)	156.5 in (3 975 mm)	156.5 in (3 975 mm)
G. Overall length – bucket level on ground		320.2 in (8 132 mm)	307.2 in (7 802 mm)	312.9 in (7 948 mm)
Dump angle – fully raised		50°	50°	50°
H. Dump height – fully raised, 45° dump		102.9 in (2 613 mm)	111.6 in (2 835 mm)	107.9 in (2 741 mm)
J. Bucket reach – fully raised, 45° dump		56.7 in (1 439 mm)	48.4 in (1 231 mm)	52.8 in (1 342 mm)
K. Bucket reach – 7 ft 0 in (2.13 m) height, 45° dump		71.1 in (1 806 mm)	67.7 in (1 719 mm)	70.2 in (1 782 mm)
L. Dig depth		4.5 in (114 mm)	3.1 in (78 mm)	3.1 in (78 mm)
Operating load – ISO Rigid Tires		10,822 lb (4 909 kg)	10,798 lb (4 898 kg)	10,962 lb (4 972 kg)
Operating load – ISO Deflected Tires		9 330 lb (4 232 kg)	9,357 lb (4 244 kg)	9,501 lb (4 310 kg)
Maximum material density – ISO Rigid Tires		1,968 lb/yd³ (1 168 kg/m³)	3,599 lb/yd³ (2 136 kg/m³)	3,915 lb/yd³ (2 323 kg/m³)
Maximum material density – ISO Deflected Tires		1,696 lb/yd³ (1 007 kg/m³)	3,119 lb/yd³ (1 851 kg/m³)	3,393 lb/yd³ (2 013 kg/m³)
Tipping load – ISO Rigid Tires:	Straight	25,027 lb (11 352 kg)	24,973 lb (11 327 kg)	25,332 lb (11 491 kg)
	40° turn	21,644 lb (9 817 kg)	21,595 lb (9 796 kg)	21,924 lb (9 945 kg)
Tipping load – ISO Deflected Tires:	Straight	23,208 lb (10 527 kg)	23,222 lb (10 533 kg)	23,554 lb (10 684 kg)
	40° turn	18,660 lb (8 464 kg)	18,714 lb (8 488 kg)	19,002 lb (8 619 kg)
Lift capacity:	Full height	15,247 lb (6 916 kg)	15,111 lb (6 854 kg)	15,219 lb (6 903 kg)
	Ground	27,872 lb (12 643 kg)	27,954 lb (12 680 kg)	28,241 lb (12 810 kg)
Breakout force with tilt cylinder		22,682 lb (10 288 kg)	28,136 lb (12 762 kg)	30,175 lb (13 687 kg)
Loader clearance circle with bucket		508.7 in (12 921 mm)	500.7 in (12 717 mm)	504.6 in (12 816 mm)

721G XR		5.5 yd³ (4.2 m³) Bucket with Bolt-on Edge - Pin On	3.0 yd³ (2.3 m³) Bucket with Bolt-on Edge - ACS Coupler	2.8 yd³ (2.14 m³) Bucket with Teeth - ACS Coupler
Operating weight		33,712 lb (15 292 kg)	33,861 lb (15 359 kg)	33,759 lb (15 313 kg)
E. Operating height – fully raised with spillguard		238.6 in (6 060 mm)	224.1 in (5 692 mm)	224.1 in (5 692 mm)
F. Hinge pin height – fully raised		172.0 in (4 369 mm)	172.0 in (4 369 mm)	172.0 in (4 369 mm)
G. Overall length – bucket level on ground		334.1 in (8 486 mm)	321.2 in (8 159 mm)	327.0 in (8 305 mm)
Dump angle – fully raised		50°	50°	50°
H. Dump height – fully raised, 45° dump		118.4 in (3 008 mm)	127.1 in (3 230 mm)	123.5 in (3 136 mm)
J. Bucket reach – fully raised, 45° dump		56.7 in (1 440 mm)	48.5 in (1 232 mm)	52.9 in (1 343 mm)
K. Bucket reach – 7 ft 0 in (2.13 m) height, 45° dump		84.1 in (2 135 mm)	80.1 in (2 034 mm)	82.8 in (2 103 mm)
L. Dig depth		4.6 in (116 mm)	3.2 in (81 mm)	3.2 in (81 mm)
Operating load – ISO Rigid Tires		9,045 lb (4 103 kg)	9,033 lb (4 097 kg)	9,171 lb (4 160 kg)
Operating load – ISO Deflected Tires		7,886 lb (3 577 kg)	7,909 lb (3 587 kg)	8,032 lb (3 643 kg)
Maximum material density – ISO Rigid Tires		1,644 lb/yd³ (976 kg/m³)	3,011 lb/yd³ (1 787 kg/m³)	3,275 lb/yd³ (1 943 kg/m³)
Maximum material density – ISO Deflected Tires		1,434 lb/yd³ (851 kg/m³)	2,636 lb/yd³ (1 564 kg/m³)	2,869 lb/yd³ (1 702 kg/m³)
Tipping load – ISO Rigid Tires:	Straight	21,056 lb (9 551 kg)	21,033 lb (9 541 kg)	21,332 lb (9 676 kg)
	40° turn	18,089 lb (8 205 kg)	18,066 lb (8 195 kg)	18,341 lb (8 319 kg)
Tipping load – ISO Deflected Tires:	Straight	19,682 lb (8 928 kg)	19,703 lb (8 937 kg)	19,984 lb (9 065 kg)
	40° turn	15,771 lb (7 154 kg)	15,817 lb (7 174 kg)	16,065 lb (7 287 kg)
Lift capacity:	Full height	14,139 lb (6 413 kg)	14,003 lb (6 351 kg)	14,110 lg (6 400 kg)
	Ground	23,100 lb (10 478 kg)	23,201 lb (10 524 kg)	23,442 lb (10 633 kg)
Breakout force with tilt cylinder		22,638 lb (10 268 kg)	28,045 lb (12 721 kg)	30,078 lb (13 643 kg)
Loader clearance circle with bucket		523.8 in (13 304 mm)	514.7 in (13 073 mm)	519.0 in (13 183 mm)

721G		Z-Bar/XR	Z-Bar/XR	Z-Bar/XR
Maximum rollback:	Ground	41°/38°	40°/37°	40°/37°
	Carry position	44°/43°	44°/43°	44°/43°
	@ Full height	57°/57°	57°/57°	57°/57°
Maximum grading angle with bucket – back dragging		63°/61°	60°/59°	61°/60°
SAE bucket capacity – struck		4.44 yd³ (3.39 m³)	2.56 yd³ (1.96 m³)	2.42 yd³ (1.85 m³)
Heaped		5.50 yd³ (4.21 m³)	3.00 yd³ (2.29 m³)	2.80 yd³ (2.14 m³)
Bucket width – outside		106.3 in (2 700 mm)	106.3 in (2 700 mm)	106.8 in (2 713 mm)
Bucket weight		3,402 lb (1 543 kg)	3,551 lb (1 611 kg)	3,449 lb (1 564 kg)

PERFORMANCE SPECS

721G Z-Bar*		3.0 yd³ (2.3 m³) Bucket with Bolt-on-Edge - JRB Coupler	2.8 yd³ (2.14 m³) Bucket with Teeth - JRB Coupler
Operating weight		33,344 lb (15 124 kg)	33,241 lb (15 078 kg)
E. Operating height – fully raised with spillguard		210.9 in (5 356 mm)	210.9 in (5 356 mm)
F. Hinge pin height – fully raised		156.5 in (3 975 mm)	156.5 in (3 975 mm)
G. Overall length – bucket level on ground		310.0 in (7 873 mm)	315.9 in (8 025 mm)
Dump angle – fully raised		50°	50°
H. Dump height – fully raised, 45° dump		109.9 in (2 791 mm)	106.0 in (2 692 mm)
J. Bucket reach – fully raised, 45° dump		51.0 in (1 296 mm)	55.2 in (1 403 mm)
K. Bucket reach – 7 ft 0 in (2.13 m) height, 45° dump		69.4 in (1 763 mm)	71.5 in (1 816 mm)
L. Dig depth		2.7 in (69 mm)	3.0 in (77 mm)
Operating load – ISO Rigid Tires		10,579 lb (4 799 kg)	10,739 lb (4 871 kg)
Operating load – ISO Deflected Tires		9,172 lb (4 160 kg)	9,312 lb (4 224 kg)
Maximum material density – ISO Rigid Tires		3,526 lb/yd³ (2 093 kg/m³)	3,836 lb/yd³ (2 276 kg/m³)
Maximum material density - ISO Deflected Tires		3,057 lb/yd³ (1 814 kg/m³)	3,326 lb/yd³ (1 973 kg/m³)
Tipping load – ISO Rigid Tires:	Straight	24,466 lb (11 098 kg)	24,816 lb (11 256 kg)
	40° turn	21,159 lb (9 597 kg)	21,479 lb (9 743 kg)
Tipping load – ISO Deflected Tires:	Straight	22,759 lb (10 323 kg)	23,083 lb (10 470 kg)
	40° turn	18,344 lb (8 321 kg)	18,624 lb (8 448 kg)
Lift capacity:	Full height	15,171 lb (6 881 kg)	15,278 lb (6 930 kg)
	Ground	26,989 lb (12 242 kg)	27,806 lb (12 613 kg)
Breakout force with tilt cylinder		26,469 lb (12 006 kg)	28,279 lb (12 827 kg)
Loader clearance circle with bucket		502.3 in (12 758 mm)	506.4 in (12 862 mm)

721G XR		3.0 yd³ (2.3 m³) Bucket with Bolt-on-Edge - JRB Coupler	2.8 yd³ (2.1 m³) Bucket with Teeth - JRB Coupler
Operating weight		33,791 lb (15 327 kg)	33,689 lb (15 281 kg)
E. Operating height – fully raised with spillguard		226.4 in (5 751 mm)	226.4 in (5 751 mm)
F. Hinge pin height – fully raised		172.0 in (4 369 mm)	172.0 in (4 369 mm)
G. Overall length – bucket level on ground		324.1 in (8 232 mm)	330.0 in (8 383 mm)
Dump angle – fully raised		50°	50°
H. Dump height – fully raised, 45° dump		125.4 in (3 186 mm)	121.5 in (3 087 mm)
J. Bucket reach – fully raised, 45° dump		51.1 in (1 297 mm)	55.3 in (1 404 mm)
K. Bucket reach – 7 ft 0 in (2.13 m) height, 45° dump		81.9 in (2 081 mm)	84.2 in (2 140 mm)
L. Dig depth		2.8 in (72 mm)	3.1 in (79 mm)
Operating load – ISO Rigid Tires		8,872 lb (4 024 kg)	9,007 lb (4 085 kg)
Operating load – ISO Deflected Tires		7,769 lb (3 524 kg)	7,890 lb (3 579 kg)
Maximum material density – ISO Rigid Tires		2,957 lb/yd³ (1 755 kg/m³)	3,217 lb/yd³ (1 909 kg/m³)
Maximum material density – ISO Deflected Tires		2,590 lb/yd³ (1 537 kg/m³)	2,818 lb/yd³ (1 672 kg/m³)
Tipping load – ISO Rigid Tires:	Straight	20,656 lb (9 369 kg)	20,948 lb (9 502 kg)
	40° turn	17,745 lb (8 049 kg)	18,014 lb (8 171 kg)
Tipping load – ISO Deflected Tires:	Straight	19,354 lb (8 779 kg)	19,629 lb (8 903 kg)
	40° turn	15,538 lb (7 048 kg)	15,780 lb (7 158 kg)
Lift capacity:	Full height	14,063 lb (6 379 kg)	14,170 lb (6 428 kg)
	Ground	22,866 lb (10 372 kg)	23,125 lb (10 489 kg)
Breakout force with tilt cylinder		26,378 lb (11 965 kg)	28,189 lb (12 786 kg)
Loader clearance circle with bucket		516.5 in (13 120 mm)	521.1 in (13 236 mm)

721G		Z-Bar/XR	Z-Bar/XR
Maximum rollback:	Ground	40°/37°	40°/37°
	Carry position	44°/43°	44°/43°
	@ Full height	57°/57°	57°/57°
Maximum grading angle with bucket – back dragging		60°/59°	62°/60°
SAE bucket capacity – struck		2.56 yd³ (1.96 m³)	2.42 yd³ (1.85 m³)
Heaped		3.00 yd³ (2.29 m³)	2.80 yd³ (2.14 m³)
Bucket width – outside		106.3 in (2 700 mm)	106.8 in (2 713 mm)
Bucket weight		3,480 lb (1 579 kg)	3,378 lb (1 532 kg)

PERFORMANCE SPECS

721G XT	3.0 yd³ (2.3 m³) Bucket with Bolt-on Edge - ACS Coupler	2.8 yd³ (2.1 m³) Bucket with Teeth ACS Coupler	3.0 yd³ (2.3 m³) Bucket with Bolt-on Edge - JRB Coupler	2.8 yd³ (2.1 m³) Bucket with Teeth JRB Coupler
Operating weight	33,861 lb (15 359 kg)	33,759 lb (15 313 kg)	33,392 lb (15 146 kg)	33,290 lb (15 100 kg)
E. Operating height – fully raised with spillguard	219.1 in (5 564 mm)	219.1 in (5 564 mm)	217.1 in (5 515 mm)	217.1 in (5 516 mm)
F. Hinge pin height – fully raised	163.6 in (4 156 mm)	163.6 in (4 156 mm)	163.6 in (4 157 mm)	163.7 in (4 157 mm)
G. Overall length – bucket level on ground	315.2 in (8 005 mm)	320.9 in (8 151 mm)	312.7 in (7 942 mm)	318.4 in (8 086 mm)
Dump angle – fully raised	55°	55°	55°	55°
H. Dump height – fully raised, 45° dump	113.3 in (2 878 mm)	109.6 in (2 784 mm)	114.9 in (2 919 mm)	111.3 in (2 827 mm)
J. Bucket reach – fully raised, 45° dump	52.1 in (1 323 mm)	56.5 in (1 435 mm)	50.2 in (1 275 mm)	54.6 in (1 388 mm)
K. Bucket reach – 7 ft 0 in (2.13 m) height, 45° dump	73.1 in (1 856 mm)	75.5 in (1 918 mm)	72.0 in (1 828 mm)	74.6 in (1 894 mm)
L. Dig depth	3.5 in (90 mm)	3.5 in (90 mm)	3.5 in (89 mm)	3.4 in (87 mm)
Operating load – ISO Rigid Tires	9,851 lb (4 469 kg)	9,998 lb (4 535 kg)	10,237 lb (4 643 kg)	10,390 lb (4 713 kg)
Operating load – ISO Deflected Tires	8,481 lb (3 847 kg)	8,611 lb (3 906 kg)	8,844 lb (4 011 kg)	8,978 lb (4 072 kg)
Maximum material density – ISO Rigid Tires	3,284 lb/yd³ (1 949 kg/m³)	3 571 lb/yd³ (2 119 kg/m³)	3,412 lb/yd³ (2 025 kg/m³)	3,711 lb/yd³ (2 202 kg/m³)
Maximum material density – ISO Deflected Tires	2,827 lb/yd³ (1 677 kg/m³)	3,075 lb/yd³ (1 825 kg/m³)	2,948 lb/yd³ (1 749 kg/m³)	3,207 lb/yd³ (1 903 kg/m³)
Tipping load – ISO Rigid Tires:				
Straight	22,805 lb (10 344 kg)	23,124 lb (10 489 kg)	23,624 lb (10 716 kg)	23,956 lb (10 866 kg)
40° turn	19,703 lb (8 937 kg)	19,996 lb (9 070 kg)	20,474 lb (9 287 kg)	20,779 lb (9 425 kg)
Tipping load – ISO Deflected Tires:				
Straight	21,152 lb (9 595 kg)	21,449 lb (9 729 kg)	21,942 lb (9 953 kg)	22,250 lb (10 092 kg)
40° turn	16,962 lb (7 694 kg)	17,222 lb (7 812 kg)	17,687 lb (8 023 kg)	17,957 lb (8 145 kg)
Lift capacity:				
Full height	13,839 lb (6 277 kg)	14,003 lb (6 352 kg)	14,396 lb (6 530 kg)	14,564 lb (6 606 kg)
Ground	31,098 lb (14 106 kg)	31,112 lb (14,112 kg)	31,434 lb (14 258 kg)	31,483 lb (14 281 kg)
Breakout force with tilt cylinder	26,353 lb (11 954 kg)	28,074 lb (12 734 kg)	27,817 lb (12 618 kg)	29,706 lb (13 474 kg)
Loader clearance circle with bucket	497.0 in (12 624 mm)	499.9 in (12 697 mm)	496.0 in (12 598 mm)	498.8 in (12 670 mm)

721G				
Maximum rollback:				
Ground	58°	58°	58°	58°
Carry position	58°	58°	58°	58°
@ Full height	58°	58°	58°	58°
Maximum grading angle with bucket – back dragging	61°	62°	60°	62°
SAE bucket capacity – struck	2.56 yd³ (1.96 m³)	2.42 yd³ (1.85 m³)	2.56 yd³ (1.96 m³)	2.42 yd³ (1.85 m³)
Heaped	3.00 yd³ (2.29 m³)	2.80 yd³ (2.14 m³)	3.00 yd³ (2.29 m³)	2.80 yd³ (2.14 m³)
Bucket width – outside	106.3 in (2 700 mm)	106.8 in (2 713 mm)	106.3 in (2 700 mm)	106.8 in (2 713 mm)
Bucket weight	3,648 lb (1 655 kg)	3,545 lb (1 608 kg)	3,179 lb (1 442 kg)	3,077 lb (1 396 kg)

NOTE: *Z-Bar performance data shown with full counterweight.

Performance data unit equipped with 20.5-R25 L3 Radial tires, ROPS cab with heater and A/C, full counterweight, standard batteries, front and rear fenders, full fuel and 165 lb (75 kg) operator. Specifications per SAE J732, J1234, J695, J742 and J818.

STANDARD EQUIPMENT

OPERATOR ENVIRONMENT

See page 1

ENGINE

Case/FPT F4HFE613T
Tier 4 Final Certified
Selective Catalytic Reduction (SCR) with Diesel Oxidation Catalyst
Selectable work modes:
- Maximum Power
- Standard Power
- Economy Power
- Auto Power

Turbocharger
Charge air cooling
Automatic belt tensioner
Integral engine oil cooling
Fuel filter with water trap
Dual-element dry-type air cleaner
Hydraulic-driven cooling fan
Air-cooled radiator
Mid-mounted cooling module
Common rail electronic fuel injection

LOADER

See page 2 – Operating weight, Other specifications

DRIVETRAIN

4-wheel drive
4F/3R Selectable autoshift/manual shift transmission
Electronic Control Module – programmable, computer controlled proportional shifting with programmable gear selection
Onboard diagnostics
Single lever electronic shift control
F/N/R switch in loader control handle
Downshift button
Torque converter
Limited-slip differentials
Outboard planetary axles
Transmission oil cooler
Brake pedal transmission disconnect – declutch
Hydraulic wet disc brakes
Spring-applied hydraulic release parking brake
Limp-Home Mode
Greasable rear axle trunnion
3-piece rims

HYDRAULICS

Electro-hydraulic (EH) joystick loader control
Low-effort steering
Hydraulic driven cooling fan
Diagnostic quick couplers
Split flange hydraulic connections – 1 in or greater
Hydraulic oil cooler

ELECTRICAL

Alternator and voltage regulator
Battery isolator/electrical disconnect
120 amp alternator
(2) 700 CCA 12-volt batteries
Electric starter
Lights:
- 2 Front and 2 rear halogen flood lights
- 2 Front driving headlights – high/low beam with integrated turn signals
- 2 LED stop/tail lights with integrated turn signals

Key start/stop switch
Backup alarm
Centrally located fuse box with all electrical circuits protected
Remote jump start posts

OTHER

Electric hood lift
Front and rear fenders, partial coverage
Heavy counterweight
Drawbar hitch
Articulation locking bar
Lift arm locking bar
Lift and tie-down points – front/rear
Grouped remote-mounted ecology drains:
- Engine oil
- Engine coolant
- Hydraulic oil

TELEMATICS

CASE SiteWatch™ Telematics – includes hardware and a 3-yr Advanced data subscription

OPTIONAL EQUIPMENT

OPERATOR ENVIRONMENT

Cloth-covered heated air-suspension seat
Leather trimmed heated air seat with active suspension
Cloth mechanical suspension seat
Headrest
3 in (76 mm) retractable seat belt
Sound Shield noise suppression package
Bluetooth radio, 12V AM/FM with auxiliary input
Radio-ready – 12 or 24-volt with auxiliary power – 12-volt
Cab convenience package:
- Rear sun shade, interior mirror, under the seat drawer, coat hook, 12V accessory port, and an ash tray

In cab powered cooler box
In cab accessory mount
LED rotating beacon
Rear view camera
External rear view mirrors
External heated rear view mirrors
Front LED driving/headlights
LED front and rear work lights
Extra front-facing LED work lights

DRIVETRAIN

5F/3R Autoshift/manual shift transmission, lockup torque converter, PowerInch de-clutch
Heavy-duty axles:
- With locking front differential and rear open differential

Cold weather package:
- Heavy-duty (2) 950 CCA 12V batteries
- Grid heater
- Fuel heater
- Hydraulic oil cooler bypass
- Low temperature hydraulic oil
- Fast-warm hydraulic valve

HYDRAULICS

Auxiliary hydraulics
Ride Control™
Secondary steering
Joystick steering with and without secondary steering
2-function loader valve with single access control
3-function loader valve with 3 lever control or with joystick plus lever

LOADER

XR extended reach version
XT tool carrier version
Attachment auxiliary hydraulics
Coupler systems – JRB or ACS compatible
Buckets – see pages 4 through 8
4 – 1 clamp buckets
Forks

TIRES

20.5-25 16 PR L2 bias – dirt/traction
20.5-25 16 PR L3 bias – rock
20.5-R25 L2 radial – dirt/traction
20.5-R25 L3 radial – rock
20.5-R25 radial Michelin SnoPlus
20.5-R25 radial Bridgestone Snow Wedge
SolidFlex HD solid tires on adapter rims
Spare wheels and tires
Axle oscillation stops

GUARDING

Skid plate, transmission and front chassis bottom guards
Windscreen guard
Specialized guarding package:
- Windscreen, articulation, front cover, chassis bottom, skid plate, transmission, lift cylinder, front lights, fuel tank, metal wrapped hoses and cylinder debris ejectors

ADVANCED ENGINE AIR FILTRATION

Heavy Debris cooling system:
- Slanted cooling module cover
- Auto reversing fan
- Increased cooling fin spacing
- Added cooling module sealing

Variable speed hydraulic reversing fan
Full-view air pre-cleaner
Sy-Klone® ejector type pre-cleaner

OTHER

Additional RH steps and platform w/ standard or wide fenders
Side guards for rear frame
Tool box – ground level access
Light counterweight – Z-Bar
Fire extinguisher
License plate bracket
12.4 mph (20 kph) maximum speed control
Special paint
Standard fenders with right and left hand steps
Wide full coverage fenders with right and left hand steps

CaseCE.com

©2017 CNH Industrial America LLC. All rights reserved. CASE is a trademark registered in the United States and many other countries, owned by or licensed to CNH Industrial N.V. its subsidiaries or affiliates. CNH Industrial Capital is a trademark in the United States and many other countries, owned by or licensed to CNH Industrial N.V., its subsidiaries or affiliates. Printed in U.S.A. Contains 10% post-consumer fiber.

IMPORTANT: CASE Construction Equipment Inc. reserves the right to change these specifications without notice and without incurring any obligation relating to such change. Availability of some models and equipment builds vary according to the country in which the equipment is used. The illustrations and text may include optional equipment and accessories and may not include all standard equipment. Your CASE dealer/distributor will be able to give you details of the products and their specifications available in your area.

Biodiesel Ready — CASE Construction Equipment is biodiesel-friendly. NOTE: All engines meet current EPA emissions regulations. All specifications are stated in accordance with SAE Standards or Recommended Practices, where applicable.

SAFETY™ NEVER HURTS — Always read the Operator's Manual before operating any equipment. Inspect equipment before using it, and be sure it is operating properly. Follow the product safety signs and use any safety features provided.

Form No. CCE201708721G
Replaces Form No. CCE201610721G

METAL
PLESS

Model	Blade position & width			Side wings	Approx. weight
	Box	Scoop	Extended	of the side gate	
PRO0848-18	8'	13'	18'	48 x 60	4700 lbs
PRO0848-20	8'	14'	20'	48 x 72	4900 lbs
PRO1048-18	10'	13 6	18'	48 x 48	4800 lbs
PRO1048-20	10'	15'	20'	48 x 60	5000 lbs
PRO1048-22	10'	16'	22'	48 x 72	5200 lbs
PRO1248-22	12'	17'	22'	48" x 60"	5400 lbs

D-SERIES
SNOW BLOWERS

SEE MORE. **DO MORE.**

FEATURING LARUE PROPRIETARY DESIGN WITH AN OFF-CENTERED SPOT CASTING CHUTE FOR MAXIMUM VISIBILITY AND SAFER OPERATION.

TABLE OF CONTENTS

COMPANY 04

PRODUCT LINEUP 05

LOADER-MOUNTED SNOW BLOWERS
- D-SERIES TWO-STAGE 06
- D-SERIES SINGLE-STAGE 12

PARTS & SERVICE 16

GLOBAL DEALER NETWORK 18

PIONEERS IN OUR FIELD

WE'VE BEEN MAKING SNOW REMOVAL EQUIPMENT FOR OVER 45 YEARS. THAT'S A LOT OF EXPERTISE, AND IT'S A LOT OF SNOW OUR BLOWERS PUT IN ITS PLACE. WE'VE SERVED A LOYAL BASE OF AIRPORT, MUNICIPAL, CONTRACTOR AND GOVERNMENT AGENCIES, AND THEY'VE HELPED MAKE OUR REPUTATION, AND OUR PRODUCTS SHINE.

A HISTORY OF ACHIEVEMENT

In 1973, J.A. Larue Inc. started as a repair shop for various types of heavy diesel equipment. Later, the company specialized in rebuilding used snow removal equipment, until, that is, founder André Larue had the vision to design and manufacture a snow blower that would stand out and stand up to the worst of winter. Nearly a half century later the company is managed by the second generation, Denis, and Louis Larue. And it has become one of the largest makers of industrial snow removal equipment in the world. Founded and based in Quebec, where snowfall has been known historically to reach up to 5 meters in depth, Larue arose from a culture of snow. Snow isn't weather in Quebec, it's a way of life.

We live it, 4 months a year. And all of that snow has given us an expertise that few others can claim. Our snow removal equipment is a study in continuous refinement, relentless innovation and an ability to deliver highly customized machines to clients around the world. Snow fears Larue. And when it comes to clearing roads, Larue is a name you can count on.

OUR MISSION

To design, manufacture and distribute industrial snow removal equipment for the global market. We're intensely focused on the needs of our customers and aim for complete satisfaction through teamwork and a spirit of innovation.

OUR VISION

To become the world leader in the design, manufacture, and distribution of industrial snow removal equipment. We want to be recognized for our passion and dedication for reliable, efficient service that is appreciated worldwide.

PRODUCT LINEUP

D-SERIES

D25 | D35 | D45 | D55 | D65

D30 | D40 | D50 | D60

LOADER-MOUNTED TWO-STAGE SNOW BLOWERS

D87

D97

LOADER-MOUNTED SINGLE-STAGE SNOW BLOWERS

T-SERIES

T60

T70

T80

SELF-PROPELLED SINGLE-ENGINE SNOW BLOWERS

T85

T95

FB18 | FB20 | FB22

FP18 | FP20 | FP22

SELF-PROPELLED DUAL-ENGINE SNOW BLOWERS, AIRPORT BROOMS & PLOWS

D-SERIES TWO-STAGE

LOADER-MOUNTED SNOW BLOWERS

Larue snow blowers set the standard for safety, performance and productivity. With the largest selection in the industry, our models are offered with either a ribbon or dual auger conveyor. No matter the size of your operations, there is a Larue product adapted to your needs.

STANDARD EQUIPMENT

- HARDOX® 500 DIRECTIONAL SPOT CASTING CHUTE WITH 2-SECTION DEFLECTOR
- WIRED JOYSTICK CONTROL
- 4.3" LCD SCREEN
- 2 FRAME-MOUNTED LED LIGHTS
- 2 CHUTE-MOUNTED LED LIGHTS
- MAINTENANCE FREE WET-TYPE MULTI-DISC CLUTCH
- ROLLER CHAIN IN OIL BATH
- HARDOX® 550 DRUM
- TUNGSTEN CARBIDE SKID SHOES
- HIGH-STRENGTH STEEL SCRAPER BLADE
- EMERGENCY STOP BUTTONS
- LEVEL INDICATOR ON THE SPOT CASTING CHUTE
- GROUND LEVEL FUEL FILL
- MECHANICAL COMPONENTS ENCLOSED
- BLOCK HEATER

RIBBON SNOW BLOWERS

D25 | D35 | D45 | D55 | D65

The serrated ribbon conveyor has a greater depth and is expressly designed to handle large amounts of loose, freshly fallen snow. They're commonly used in urban areas for truck loading, at airports and on mountain roads.

DUAL AUGER SNOW BLOWERS

D30 | D40 | D50 | D60

The dual auger conveyor is most effective against compact, hardened snow windrows, and ice. It's your best ally when it comes to carving through snowbanks, widening roads, and clearing commercial parking lots.

APPLICATIONS

TRUCK LOADING

ROAD CLEARING

SIDE CASTING

MOUNTAIN PASS OPENING

FEATURES & BENEFITS

SAFETY FIRST 1

Every single product in Larue's snow clearing equipment lineup is built and tested with the operator's health & safety top-of-mind. You have a lot at stake in your daily operations and your people are your most valuable assets. Downtime isn't in your vocabulary. That's why we engineer our machines in order to minimize risk and maximize safety. Features like an automatic clutch disengagement system in the event of unit blockage (safety/shear bolts), 2 emergency stop buttons, safety bolts access located away from street-side and ground-level maintenance points work together to keep everyone safe.

LIGHTER BUT MEANER

Better design means significant productivity gains, but it also means better engineering with features and benefits like triangular box frame construction, unmatched power-to-weight ratio, and left-mounted radiator location that reduces frosting or blocking. In addition, the impeller & drum are at the center of the unit, facilitating snow processing and reducing lateral overflow. Add to that a center-of-gravity located close to the wheel loader for enhanced stability.

OUTSTANDING PERFORMANCE 2

Larue's unique conveyor and impeller designs allow operators to process more snow, faster. Equipped with Cummins' turbo-diesel engines with output ranging from 134 to 365 horsepower, our units boast a casting distance up to 150 feet. Simply put, we've got the power and capacity you need to take snow out of your way.

RUGGED DURABILITY

Our heavy-duty units are designed to perform relentlessly under extreme weather conditions. Plus, the parts we make, or install have been rigorously tested and solidly built for maximum durability. Heavy-wear parts are machined from abrasion-resistant Hardox , while still others are engineered from tungsten or chromium carbide, up to 4 times more durable. Larue snow blowers will not let you down.

ULTIMATE PRECISION 3

Experience precision casting with a dense, solid stream and an impressive snow compaction rate. Larue products are all about clearing the roads right the first time, and every time.

SUPERIOR VISIBILITY 4

Built with the operator in mind, our snow blowers' angled hood shape and off-centered chutes offer superior visibility, which in turn reduces operator fatigue, an essential plus for the safety of staff working long shifts. Add to that 4 powerful LED lights and lack of visibility during nighttime operations is simply no longer an issue.

EASE OF MAINTENANCE 5

Larue snow blowers are designed for easy serviceability and simple, lower-cost maintenance because all components are accessible at ground level. Plus, Larue's transmission-integrated wet-type multi-disc clutch requires no maintenance or periodic adjustments. Instead of having a belt drive, we opted for a roller chain in oil bath in order to limit maintenance once again. Mechanical components are enclosed for maximum protection, and fuel fill is made from ground level. And off-the-shelf parts reduce lead times and ensure your Larue is back on the road, fast. Convenience is something we've built into our approach, and in our lineup.

LOW OPERATING COST

Our machines are engineered to maximize uptime and reduce cost of operation, all of which enhances your ROI. Your budget matters when considering the parts and components for repair or replacement. We build snow clearing equipment, but we're mainly in the business of customer satisfaction via maximum profitability and exceptional service. That way, Larue is top-of-mind when it's time to refresh their fleet. It's a formula that has contributed in no small part to our success since our beginnings. Make it part of yours.

ENVIRONMENT-FRIENDLY

Nearly all our new two-stage models are equipped with a certified Stage V engine, subject to the strictest current emission standards. Larue's unique engine integration design improves fuel economy without compromising performance & reliability.

TECHNICAL SPECIFICATIONS

	SMALL	MEDIUM				LARGE			
STANDARD SPECIFICATIONS	**D25**	**D30**	**D35**	**D40**	**D45**	**D50**	**D55**	**D60**	**D65**
PERFORMANCE CLASS	1,400 TONS/H	1,800 TONS/H		2,400 TONS/H		3,000 TONS/H		3,500 TONS/H	
VOLUMETRIC CAPACITY*	1,750 YD^3/H @ 1,700 LB-FT	2,900 YD^3/H @ 2,150 LB-FT		3,600 YD^3/H @ 2,500 LB-FT		4,650 / 5,300 YD^3/H @ 4,500 LB-FT		4,650 / 5,300 / 6,050 YD^3/H @ 4,500 LB-FT	
CASTING DISTANCE	125 FT				150 FT				
ENGINE	CUMMINS® F3.8			CUMMINS® QSB6.7		CUMMINS® B6.7		CUMMINS® B6.7 / L9	
EMISSION STANDARD	STAGE V / TIER 4 FINAL			STAGE IV / TIER 4 FINAL		STAGE V / TIER 4 FINAL			
ENGINE POWER	134 HP	173 HP		235 HP		310 / 326 HP		310 / 326 / 365 HP	
ENGINE TORQUE	406 LB-FT	457 LB-FT		655 LB-FT		950 / 1,014 LB-FT		950 / 1,014 / 1,151 LB-FT	
FUEL TANK CAPACITY	46 US GAL			66 US GAL			92 US GAL		
WORKING WIDTH†	91 IN	102 IN		110 IN			114 IN		
WORKING HEIGHT	42 IN	52 IN		54 IN		55 IN		60 IN	
DRIFT CUTTERS HEIGHT	72 IN		84 IN				98 IN		
TRUCK LOADING HEIGHT‡	125 IN		129 IN				139 IN		
TRANSPORTATION HEIGHT	87 IN	97 IN		93 IN		104 IN		105 IN	
RIBBON / AUGER DIAMETER	28 IN	2 X 17 IN	32 IN	2 X 17 IN	32 IN	2 X 20 IN	36 IN	2 X 26 IN	40 IN
IMPELLER DIAMETER	28 IN		34 IN				40 IN		
WEIGHT§	7,000 LB	7,500 LB		8,000 LB		10,250 LB		11,000 LB	
MINIMUM LOADER SIZE	1 YD^3	1.8 YD^3		2 YD^3		2.5 YD^3		3 YD^3	

* Volumetric capacity at specific impeller torque
† Working width can be extended by 6" for all models or by 12" for the D50 or higher models with the widening kit option
‡ Truck loading height can be extended by 18" or 30" with the telescopic chute extension option. See page 11 for availability
§ Operating weight is subject to change depending on fluid levels, selected equipment and options.

BUILD YOUR OWN

TELESCOPIC CHUTE EXTENSION

18" or 30" hydraulic telescopic chute extension facilitates truck loading.

HYDRAULIC TILTING CHUTE

Enables the chute to be unclogged from ground level, increasing operational safety and speed while reducing total height for easier trailer transportation.

3-SECTION CHUTE DEFLECTOR

Improves snow stream precision and control. Available in Hardox 550 or chromium carbide.

SHOTGUN

36" drum outlet extension increases casting distance and prevents snow from getting into the operator's field of vision.

WIRELESS CONTROL SYSTEM

Bluetooth control system enables faster pairing with the wheel loader.

STEERING VANE

Allows the operator to steer the snow blower more effectively in snow banks, improving the cutting line precision. Available on the right side, or on both sides.

150 DEGREE DRUM ROTATION

Worm gear drum rotation allowing to cast from left-to-right on a 150 degree angle span.

FRAME-MOUNTED HEATED LED LIGHTS

Improves forward visibility by eliminating snow accumulation on the lights.

ICE CUTTERS KIT

Installed on the dual auger conveyor, these 4-sided cutters give more bite against icy snowbanks. One kit equips one auger.

FULL WIDTH SKID SHOE

Offers complete protection under the snow blower. Available in Hardox® 550 or tungsten carbide.

CHROMIUM CARBIDE DRUM LINER

Boasts 3 times the durability of a standard drum.

LED WORK LIGHT FOR SAFETY BOLTS

Located inside the safety bolts compartment for convenient night access.

OPTION AVAILABILITY

● AVAILABLE
– NOT AVAILABLE

	OPTIONS	D25	D30	D35	D40	D45	D50	D55	D60	D65
CAB CONTROL	WIRELESS CONTROL SYSTEM - BLUETOOTH®	●	●	●	●	●	●	●	●	●
	EXTRA 25 CONTROL CABLE	●	●	●	●	●	●	●	●	●
	5.7" LCD SCREEN	●	●	●	●	●	●	●	●	●
CHUTE	18" TELESCOPIC CHUTE EXTENSION	●	–	–	–	–	●	●	●	●
	30" TELESCOPIC CHUTE EXTENSION	–	●	●	●	●	–	–	–	–
	HYDRAULIC TILTING CHUTE	●	●	●	●	●	●	●	●	●
	SHOTGUN (DRUM OUTLET EXTENSION)	–	–	–	–	–	●	●	●	●
	RAISED SPOT CASTING CHUTE	–	–	–	–	–	●	●	●	●
	2-SECTION CHUTE DEFLECTOR - CHROMIUM CARBIDE	●	●	●	●	●	●	●	●	●
	2-SECTION CHUTE DEFLECTOR - HARDOX® 550	●	●	●	●	●	●	●	●	●
	3-SECTION CHUTE DEFLECTOR - CHROMIUM CARBIDE	●	●	●	●	●	●	●	●	●
	REMOTE GREASE POINTS - CHUTE	●	●	●	●	●	●	●	●	●
STEERING	STEERING VANE (RIGHT SIDE)	●	●	●	●	●	●	●	●	●
	DUAL STEERING VANE	●	●	●	●	●	●	●	●	●
DRUM	DRUM - 150 DEGREE ROTATION BY WORM GEAR	●	●	●	●	●	●	●	●	●
	DRUM LINER - CHROMIUM CARBIDE	●	●	●	●	●	●	●	●	●
	DRUM ALIGNMENT GUIDE	●	●	●	●	●	●	●	●	●
SAFETY	HEATED LED LIGHTS - FRAME	●	●	●	●	●	●	●	●	●
	LED LIGHTS - HOOD	●	●	●	●	●	●	●	●	●
	LED WORK LIGHT - ENGINE COMPARTMENT	●	●	●	●	●	●	●	●	●
	LED WORK LIGHT - SAFETY BOLTS	●	●	●	●	●	●	●	●	●
	INDICATOR LIGHT ON HOOD - SNOW BLOWER ENGAGED	●	●	●	●	●	●	●	●	●
	ENGINE SHUTDOWN SYSTEM - SAFETY BOLTS ACCESS DOOR WITH LED LIGHT	●	●	●	●	●	●	●	●	●
	ENGINE SHUTDOWN SYSTEM - LOADER DOOR	●	●	●	●	●	●	●	●	●
	REMOTE SHUTDOWN SYSTEM FOR THE FLAGMAN	●	●	●	●	●	●	●	●	●
	ACCESS STEPS - CHUTE	●	●	●	●	●	●	●	●	●
	AIR HORN	●	●	●	●	●	●	●	●	●
	ANTI-VANDALISM LOCKOUT	●	●	●	●	●	●	●	●	●
DURABILITY & EFFICIENCY	ICE CUTTERS KIT FOR ONE OR TWO AUGER(S)	–	●	–	●	–	●	–	●	–
	REVERSE FUNCTION - CONVEYOR & IMPELLER	●	●	●	●	●	●	●	●	●
	REINFORCED RIBBON - HEAVY DUTY	–	–	–	–	–	–	●	–	●
	SCRAPER BLADE - RUBBER	●	●	●	●	●	●	●	●	●
	SCRAPER BLADE - UHMW	●	●	●	●	●	●	●	●	●
	SCRAPER BLADE - TUNGSTEN CARBIDE	●	●	●	●	●	●	●	●	●
	FULL WIDTH SKID SHOE - HARDOX® 550	●	●	●	●	●	●	●	●	●
	FULL WIDTH SKID SHOE - TUNGSTEN CARBIDE	●	●	●	●	●	●	●	●	●
	DRIFT CUTTER SKID SHOES - TUNGSTEN CARBIDE	●	●	●	●	●	●	●	●	●
	ADJUSTABLE HYDRAULIC WHEEL (LEFT SIDE)	–	–	–	–	–	●	●	●	●
	SNOW WHEELS KIT (2)	–	–	–	●	●	●	●	●	●
	FRAME MODIFICATION TO ALLOW RETROFIT FOR SNOW WHEELS KIT (2)	–	–	–	●	●	●	●	●	●
	DRIFT CUTTER GUARD - UHMW	●	●	●	●	●	●	●	●	●
	DRIFT CUTTER GUARD - ROLLER	●	●	●	●	●	●	●	●	●
	GUARDRAIL PROTECTOR - UHMW	●	●	●	●	●	●	●	●	●
	PROTECTION RAIL	●	●	●	●	●	●	●	●	●
	HOOD PROTECTOR - UHMW	●	●	●	●	●	●	●	●	●
	RADIATOR COVER	●	●	●	●	●	●	●	●	●
	RADIATOR PROTECTION GRILL	●	●	●	●	●	●	●	●	●
	SNOW GUARD	–	–	–	–	–	●	●	●	●
	PUSH BAR	●	●	●	●	●	●	●	●	●
	BATTERY CHARGER	●	●	●	●	●	●	●	●	●
	BATTERY WARMER	●	●	●	●	●	●	●	●	●
	REMOTE JUMP START TERMINALS	●	●	●	●	●	●	●	●	●
	ELECTRONICALLY CONTROLLED ENGINE COOLING FAN	–	–	–	●	●	●	●	●	●
	AIR INTAKE PRE-CLEANER	–	–	–	–	–	●	●	●	●
	HYDRAULIC OIL HEATER - PAD	●	●	●	●	●	●	●	●	●
	HYDRAULIC OIL HEATER - IMMERSION	●	●	●	●	●	●	●	●	●
	PRESSURE GAUGE - HYDRAULIC OIL	●	●	●	●	●	●	●	●	●
	TEMPERATURE AND LEVEL INDICATOR - HYDRAULIC OIL	●	●	●	●	●	●	●	●	●
OTHERS	QUICK COUPLER	●	●	●	●	●	●	●	●	●
	CUSTOM PAINT JOB	●	●	●	●	●	●	●	●	●
	WIDENING KIT - 6"	●	●	●	●	●	●	●	●	●
	WIDENING KIT - 12"	–	–	–	–	–	●	●	●	●
	LIFTING HOOKS KIT	●	●	●	●	●	●	●	●	●
	MECHANICAL HOUR METER	●	●	●	●	●	●	●	●	●
	DIAGNOSTIC TOOL - CUMMINS® INLINE MINI DATALINK ADAPTER	●	●	●	●	●	●	●	●	●

D-SERIES SINGLE-STAGE

LOADER-MOUNTED SNOW BLOWERS

Larue loader-mounted single-stage snow blowers are recognized for their superior capacity, casting height, and impressive power. This lineup is specialized for use in snow dump sites.

STANDARD EQUIPMENT

- RIGHT SIDE STEERING VANE
- WIRED JOYSTICK CONTROL
- 4.3" LCD SCREEN
- 2 FRAME-MOUNTED LED LIGHTS
- DRY-TYPE MULTI-DISC CLUTCH
- ROLLER CHAIN IN OIL BATH
- HARDOX® 500 DRUM
- TUNGSTEN CARBIDE SKID SHOES
- HARDOX® 500 SCRAPER BLADE
- EMERGENCY STOP BUTTONS
- GROUND LEVEL FUEL FILL
- MECHANICAL COMPONENTS ENCLOSED
- BLOCK HEATER

D87

The D87 combines strength and performance with a lighter weight, allowing it to be paired with a smaller loader. Its large capacity and casting height make it a logical choice to operate in a snow dump.

D97

The D97 is our most capable single-stage snow blower and was designed with no compromise on power and torque. With its superior performance, nothing can scare off this industrial-strength machine.

APPLICATION

SNOW DUMP SITES

FEATURES & BENEFITS

SAFETY FIRST 1

All of our models are built and tested with the operator's health and safety as our top priority. We understand that you have a lot at stake in your daily operations and that you want to take care of your people. You cannot afford downtime. That's why we designed our snow blowers in a way that minimizes the risk of accidents. Among those design elements are the automatic clutch disengagement system if the unit suffers a blockage (safety/shear bolts), all maintenance points made from the ground and 2 emergency stop buttons to help keep the workers safe.

BETTER BY DESIGN 2

Better design means significant productivity gains, but it also means better engineering with features and benefits like triangular box frame construction, unmatched power-to-weight ratio, and left-mounted radiator that reduces frosting or blocking. Its center-of-gravity is located close to the wheel loader for enhanced stability. It's clear, Larue products are built for performance and designed to last.

RUGGED DURABILITY 3

Our heavy-duty units are designed to perform relentlessly under extreme weather conditions. Plus, the parts we make, or install have been rigorously tested and solidly built for maximum durability. Heavy-wear parts are machined from abrasion-resistant Hardox , while still others are engineered from tungsten or chromium carbide, up to 4 times more durable. Larue snow blowers will not let you down.

OUTSTANDING PERFORMANCE

Larue single-stage snow blowers are powered by a Caterpillar Tier 4 Final engine. Specialized for snow dump sites, they can blast snow up to 120 feet providing fast, cost-efficient clearing capacity. Delivering up to 1,200 horsepower, these machines are designed to work with ease in the toughest operating conditions. And our innovative optimized conveyor minimizes lateral overflow, reducing the number of passes required to do the job.

HIGH UPTIME, LOW MAINTENANCE

The majority of Larue components are engineered in-house to ensure that your equipment stays on the road, where it belongs. Occasionally you might need to do a maintenance. Again, we've got you covered. Larue single-stage snow blowers are designed for easy serviceability and simple maintenance with all components accessible from ground level. We also use off-the-shelf parts which reduces lead times ensuring your Larue is back to work, fast.

OPERATING COST UNDER CONTROL 4

Our machines are engineered to maximize uptime and reduce cost of operation, all of which enhances your ROI. Your budget matters when considering the parts and components for repair or replacement. We build snow clearing equipment, but we're also in the business of customer satisfaction via maximum profitability and exceptional service. That way, Larue is top-of-mind when it's time to refresh their fleet. It's a formula that has contributed in no small part to our success for over 45 years. Make it part of yours.

TECHNICAL SPECIFICATIONS

STANDARD SPECIFICATIONS	D87	D97
PERFORMANCE CLASS	7,000 TONS/H	8,500 TONS/H
VOLUMETRIC CAPACITY*	18 900 YD³/H @ 20,650 LB-FT	22,700 YD³/H @ 23, 350 LB-FT
CASTING HEIGHT	100 FT	120 FT
ENGINE	CATERPILLAR® C18	CATERPILLAR® C27 / C32
EMISSION STANDARD	STAGE IV / TIER 4 FINAL	
ENGINE POWER	800 HP	1,050 / 1,200 HP
ENGINE TORQUE	2,687 LB-FT	3,100 / 4,056 LB-FT
FUEL TANK CAPACITY	200 US GAL	300 US GAL
WORKING WIDTH†	122 IN	132 IN
WORKING HEIGHT	75 IN	
DRIFT CUTTER HEIGHT	105 IN	
TRANSPORTATION HEIGHT	114 IN	
IMPELLER DIAMETER	70 IN	
WEIGHT‡	22,000 LB	24,200 LB
MINIMUM LOADER SIZE	5 YD³	7 YD³

* Volumetric capacity at specific impeller torque.
† Working width can be extended by 6" with the widening kit option.
‡ Operating weight is subject to change depending on fluid levels, selected equipment and options.

OPTIONS

- WIRELESS CONTROL SYSTEM (BLUETOOTH®)
- EXTRA 25' CONTROL CABLE
- 5.7" LCD SCREEN
- FRAME-MOUNTED HEATED LED LIGHTS
- LED LIGHTS ON HOOD
- LED WORK LIGHT IN ENGINE COMPARTMENT
- LED WORK LIGHT FOR SAFETY BOLTS
- ENGINE SHUTDOWN SYSTEM
- AIR HORN
- ANTI-VANDALISM LOCKOUT
- BATTERY CHARGER
- BATTERY WARMER
- REMOTE JUMP START TERMINALS
- HYDRAULIC OIL HEATER
- HYDRAULIC OIL PRESSURE GAUGE
- HYDRAULIC OIL TEMPERATURE AND LEVEL INDICATOR
- QUICK COUPLER
- CUSTOM PAINT JOB
- 6" WIDENING KIT
- LIFTING HOOKS KIT
- MECHANICAL HOUR METER

PARTS & SERVICE

WE KNOW HOW TO BUILD SNOW REMOVAL EQUIPMENT. SERVICING THEM IS ALSO A PLEDGE WE MAKE. WHAT'S MORE, OUR QUALITY OEM PARTS ARE AVAILABLE THROUGHOUT OUR GLOBAL DEALER NETWORK.

COUNT ON US

It's one thing to build powerful snow removal equipment. It's quite another to offer parts & service that meet the same high benchmark. We do. Anywhere there's snow you'll find Larue, and anywhere you find Larue you'll find our authentic, reliable parts. We'll get them to you, and one of our dealers will install them if needed. When it comes to parts & service, speed and efficiency are the surest way to meet the bottom line. And that's exactly what we set out to do.

GLOBAL PARTS DISTRIBUTION

Our customers rely on machines that deliver not only performance, but rugged durability. Colder climates are demanding, but so are the needs of our clients to keep their Larue snow removal equipment running perfectly, whenever, and wherever they need it. Which is why our global parts distribution network is there. You're never let down with a Larue, and the very same goes when on those occasions you need a part. Snow doesn't wait for you to be ready. And you shouldn't have to wait long for parts you need to take it on. You need it? We've got it, and we'll get it to you.

SERVICE YOU CAN TRUST

At Larue, servicing what we make is part of the equation. Our team is experienced, friendly and dedicated. Snow blowers and diesel engines run in our blood, and when it comes to servicing them, the same second nature applies. We're never more than a phone call or email away, and because we're always ready, willing and able to help, we do. We make snow blowers, but we're also in the uptime business, and if anyone understands the importance of continuous operation both in getting the job done and clearing the bottom line, it's us, it's us. We've mastered the art of finding solutions.

GLOBAL DEALER NETWORK

OUR INTERNATIONAL FOOTPRINT

Larue is established in 13 countries with over 60 locations serving a wide customer base. Our extensive dealer network provides convenient service points, stock our quality OEM parts, and are the surest way to keep your Larue running like new.

VISIT, FOLLOW & WATCH

@LARUESNOWBLOWERS

Sourcewell
Awarded Contract
Contract # 080815-AL

USFCR
CERTIFIED VENDOR

©2022 J.A. Larue Inc. 1-877-658-3013

laruesnowblowers.com

Marketing Communications. All illustrations and specifications contained in this brochure are based on the latest product information available at the time of publication. Larue reserves the right to make changes at any time, without notice, to colors, materials, equipment, specifications and models. Any variations in colors shown are due to reproduction variations of the printing process. Some units are shown with optional equipment. Wheel loaders are displayed for demonstration purposes only and are therefore not included with the purchase of a Larue snow blower. Larue is a registered trademark of J.A. Larue Inc. Cummins is a registered trademark of Cummins Inc. Caterpillar is a registered trademark of Caterpillar Inc. Hardox is a registered trademark of SSAB Technology AB. Bluetooth is a registered trademark of Bluetooth SIG Inc. Printed in Canada.

LARUE

LARUESNOWBLOWERS.COM

MAY 2022

LARUE 2 YEARS LIMITED WARRANTY

COVERAGE

J.A. LARUE inc. "LARUE" warrants new equipments sold by it, to be free from defects in material and workmanship. This warranty applies to new Equipments delivered to the first user.

This warranty covers any failures of the Equipment under normal use and service, which result from a defect in material or factory workmanship (Warrantable Failures). Coverage begins with the delivery of the Equipment to the first user and continues for two (2) year or **2000 hours of operation**, whichever occurs first. From the date of delivery of the Equipment to the first user or from the date the unit is first leased, rented or loaned or when the Equipment has been operated for 50 hours, whichever occurs first.

This warranty is applicable to all owners in the chain of distribution up to the first user. The coverage does not continue to subsequent user-owner even if the period of coverage is not terminated.

Specific warranty clauses in the signed LARUE sale contract prevail on this warranty coverage.
Public bid warranty specifications in which LARUE has consented to comply prevails on this warranty coverage.

The engine(s) base and extended warranty coverage as described by the manufacturer warranty documentation prevails on LARUE Limited warranty. In addition, the warranty works must be executed directly by the manufacturer. Equally and when applicable, it is also valid for Allison Automatic Transmission.

This warranty is limited to the repair or replacement of defective parts and shall constitute fulfillment of all liabilities of LARUE. In no event shall LARUE or the VENDOR assume, in favor of any customer or third party, any liability for loss of time, inconvenience, commercial loss, consequential damages or any other type of damages whatsoever.

LARUE'S RESPONSABILITIES

If a defect in material or workmanship is found during the base warranty period, LARUE will, during normal working hours and through a place of business of a LARUE authorized Service Center:

- Provide new, remanufactured or approved repaired parts or assembled components needed to correct the defect. Item replaced under this warranty become the property of LARUE;
- Replace lubricating oil, filters, coolant and other service items made unusable by the defect.

VENDOR'S RESPONSABILITIES

The VENDOR'S who has sold the new equipment is responsible for:

- Providing proof of the delivery date to the first user;
- Completing the PRODUCT Registration Certificates and returning immediately to LARUE upon delivery to the owner in order to activate and validate the warranty.
- Completing when required, the Warranty Claim Form supplied by the COMPANY and completed with as much comprehensive details as possible;
- Providing travel labor, up to four hours round trip, if in the opinion of the VENDOR, the product cannot reasonably be transported to a place of business of a LARUE authorized Service Center or other source approved by LARUE (travel labor in excess of four hours round trip, and any meals, mileage, lodging, etc. is the owner's responsibility).

OWNER'S RESPONSABILITIES

The owner is responsible for:

- Owner is responsible for the operation and maintenance of the Equipment as specified in the LARUE Operation and Maintenance Manual. Owner is also responsible for providing proof that all recommended maintenance has been performed;
- Labor costs, except as stated under "LARUE RESPONSABILITIES";
- To disconnect and reconnect the Equipment from other Equipment;
- Travel expenses not covered under "LARUE RESPONSABILITIES";
- All costs associated with transporting the product to and from the place of business of a LARUE authorized Service Center or a dealer or other source approved by LARUE;
- Overtime labor costs;
- Parts shipping charges in excess of those that are usual;
- Local taxes, if applicable;
- Costs to investigate complaints, unless the problem is caused by a defect in LARUE material or workmanship;
- Giving timely notice of a warrantable failure and promptly making the product available for repair;
- Performance of the required maintenance (including use of proper liquid such as fuel, oil, lubricants and coolant) and items replaced due to normal wear and tear;
- Allowing LARUE access to all electronically stored data;
- Owner is responsible for non-Equipment repairs, "downtime" expenses, fines, all applicable taxes, all business costs and other losses resulting from a Warrantable Failure.

LIMITATIONS

- LARUE is not responsible for failure or damage results from:
  - Any use or installation which LARUE judges improper.
  - Attachments, accessory items and parts not sold or approved by LARUE.
  - Abuse, neglect including but not limited to operation without adequate lubricants or other liquid, improper storage, warm up.
  - User's delay in making the product available after being notified of a potential product problem.
  - Unauthorized repair, adjustments, modification of the equipment.
  - Damage to parts, fixtures, housings, attachments, and accessory items, which are not part of the Equipment.

- LARUE does not cover wear or wear out of covered parts.
- LARUE is not responsible for incidental or consequential damages.
- The performance of repairs is the exclusive owner's remedy under this warranty. LARUE does not authorize any person to assume or create for it any other obligation or liability in connection with the equipment.

D-SERIES TWO-STAGE DIMENSIONS

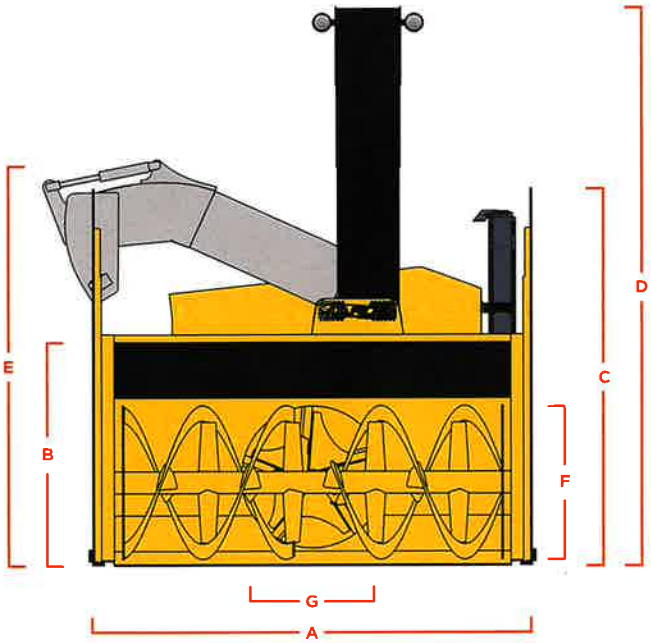

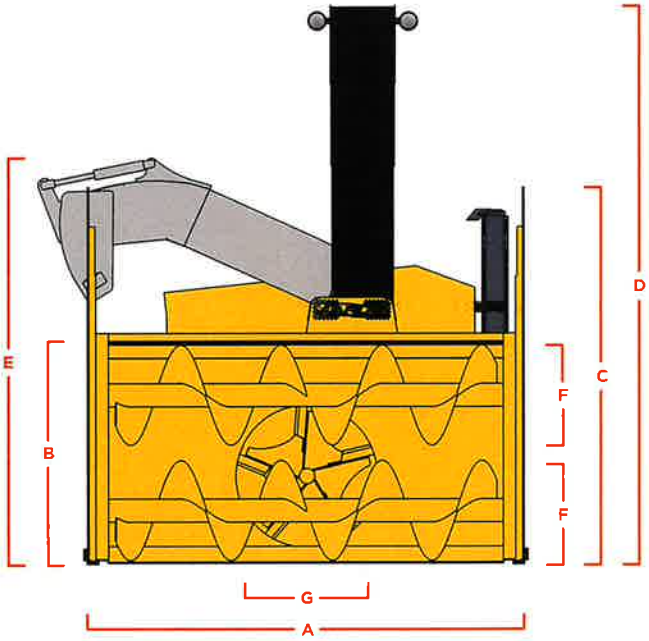

IMPERIAL

STANDARD SPECIFICATIONS	D25	D30	D35	D40	D45	D50	D55	D60	D65
A WORKING WIDTH*	91 IN	102 IN		110 IN			114 IN		
B WORKING HEIGHT	42 IN	52 IN		54 IN		55 IN		60 IN	
C DRIFT CUTTERS HEIGHT	72 IN		84 IN				98 IN		
D TRUCK LOADING HEIGHT†	125 IN		129 IN				139 IN		
E TRANSPORTATION HEIGHT	87 IN	97 IN		93 IN		104 IN		105 IN	
F RIBBON / AUGER DIAMETER	28 IN	2 X 17 IN	32 IN	2 X 17 IN	32 IN	2 X 20 IN	36 IN	2 X 26 IN	40 IN
G IMPELLER DIAMETER	28 IN		34 IN				40 IN		

* Working width can be extended by 6" or 12" with the widening kit option.
† Truck loading height can be extended by 18" or 30" with the telescopic chute extension option.

METRIC

STANDARD SPECIFICATIONS	D25	D30	D35	D40	D45	D50	D55	D60	D65
A WORKING WIDTH*	2,311 MM	2,591 MM		2,794 MM			2,896 MM		
B WORKING HEIGHT	1,067 MM	1,321 MM		1,372 MM		1,397 MM		1,524 MM	
C DRIFT CUTTERS HEIGHT	1,829 MM		2,134 MM				2,489 MM		
D TRUCK LOADING HEIGHT†	3,175 MM		3,277 MM				3,531 MM		
E TRANSPORTATION HEIGHT	2,210 MM	2,464 MM		2,362 M		2,642 MM		2,667 MM	
F RIBBON / AUGER DIAMETER	711 MM	2 X 432 MM	813 MM	2 X 432 MM	813 MM	2 X 508 MM	914 MM	2 X 660 MM	1,016 MM
G IMPELLER DIAMETER	711 MM		864 MM				1,016 MM		

* Working width can be extended by 152 or 304 mm with the widening kit option.
† Truck loading height can be extended by 457 or 762 mm with the telescopic chute extension option.

ZF 85 IV

12° V-drive, direct mount marine transmission.

Maximum Input**

Duty	kW	hp	RPM
Pleasure	389	522	3500
Light	365	489	3500
Medium	311	416	3500
Continuous	232	311	3200

** Must not be exceeded

Description

- Reverse reduction marine transmission with hydraulically actuated multi-disc clutches .
- Suitable for high performance applications in luxury motoryachts, sport fishers, express cruisers etc .
- Compatible with all types of engines and propulsion systems, including waterjets and surface- piercing propellers, as applicable .
- Robust design also withstands continuous duty in workboat applications .
- Fully works tested, reliable and simple to install .
- Design, manufacture and quality control standards comply with ISO 9001 .

Features

- B/W connection integrated with casing .
- Case hardened and precisely ground gear teeth for long life and smooth running .
- Smooth and reliable hydraulic shifting with control lever for attachment of push-pull cable .
- Suitable for twin engine installations (same ratio and torque capacity in ahead or astern mode) .
- Compact, space saving design; 12° vee-angle and beveloid gear .
- Output shaft thrust bearing designed to take maximum propeller thrust astern and ahead .
- Oil drain plug .
- Lightweight and robust aluminum alloy casing (sea water resistant) .
- Replaceable oil filter .
- "SUPERSHIFT" clutch control .
- Integrated bosses for speed pick-up installation at output flange .

Options

- Classification by all major Classification Societies on request .
- Control cable bracket for mounting of push-pull cable to the control lever .
- Engine-matched dual stage coupling .
- Mounting brackets .
- Oil cooler complete with fittings and flexible oil hoses .
- Propeller shaft flange .
- SAE «A» Power Take Off .
- SAE 2 and SAE 3 bell housings .
- Trolling valve (mechanical) for slow-speed drive .
- Thermostatic valve for better performance of trolling valve in cold sea water .
- Electric Trolling .
- Supershift (with Autotroll and Easidock) .

Last Updated:07:58 PM GMT - 18-Nov-07

Pleasure Duty

RATIOS		MAX. TORQUE		POWER/RPM		MAXIMUM RATED POWER						MAX. RPM
'A' Pos	'B' Pos	Nm	ftlb	kW	hp	kW	hp	kW	hp	kW	hp	
						2800 rpm		3000 rpm		3300 rpm		
1.644	1.638	1064	785	0.1114	0.1494	312	418	334	448	368	493	3500
2.008	1.996	1064	785	0.1114	0.1494	312	418	334	448	368	493	3500
2.493	2.468	1064	785	0.1114	0.1494	312	418	334	448	368	493	3500

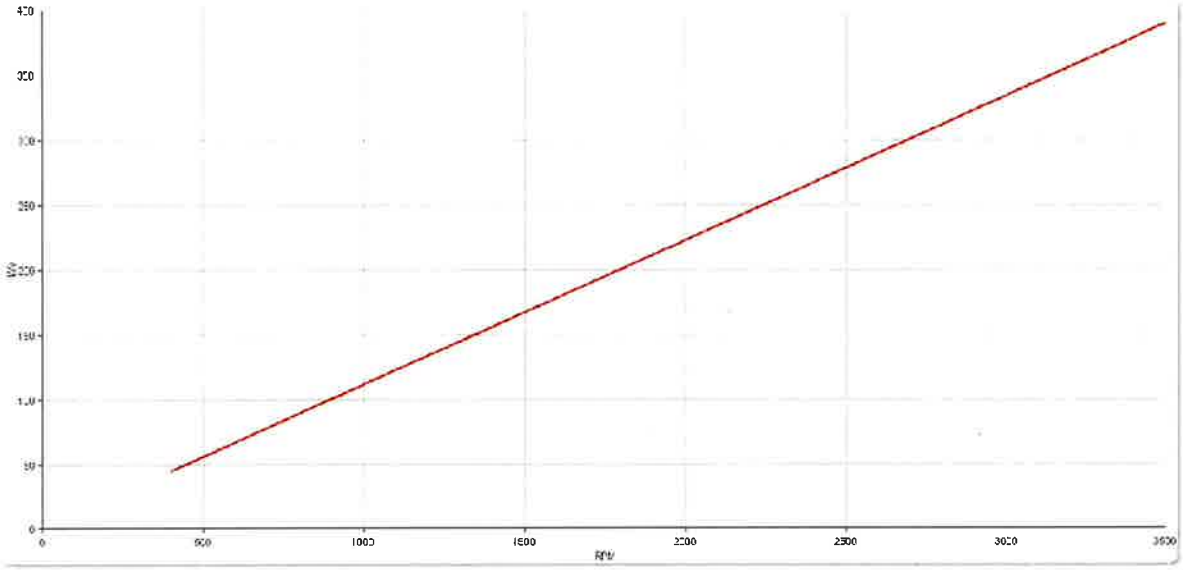

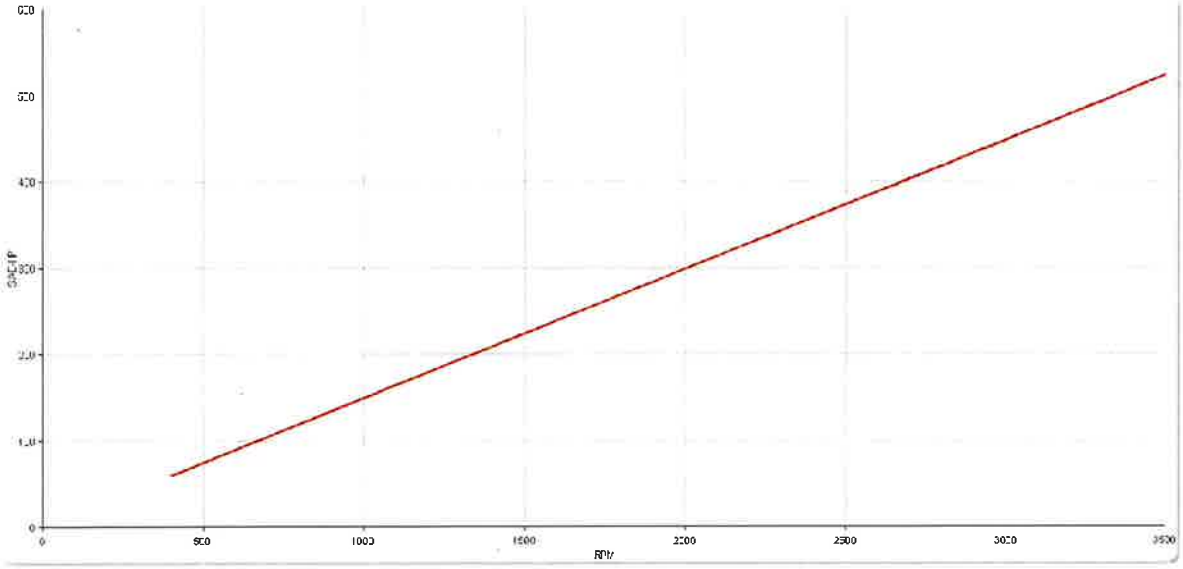

"A" POS = continuous running position (normally AHEAD). "B" POS = reverse position. B/W = Borg Warner adaptor.

Last Updated:07:58 PM GMT - 18-Nov-07

* Special Order Ratio

Light Duty

RATIOS		MAX. TORQUE		POWER/RPM		MAXIMUM RATED POWER						MAX. RPM
'A' Pos	'B' Pos	Nm	ftlb	kW	hp	kW	hp	kW	hp	kW	hp	
						2100 rpm		2500 rpm		2800 rpm		
1.644	1.638	996	735	0.1043	0.1399	219	294	261	350	292	392	3500
2.008	1.996	996	735	0.1043	0.1399	219	294	261	350	292	392	3500
2.493	2.468	996	735	0.1043	0.1399	219	294	261	350	292	392	3500

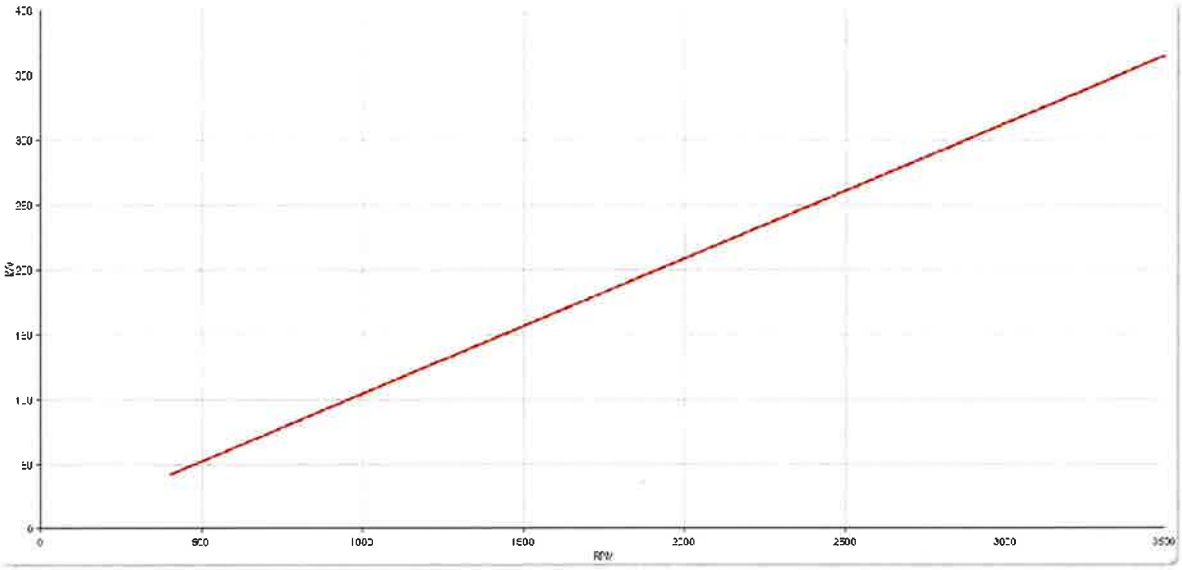

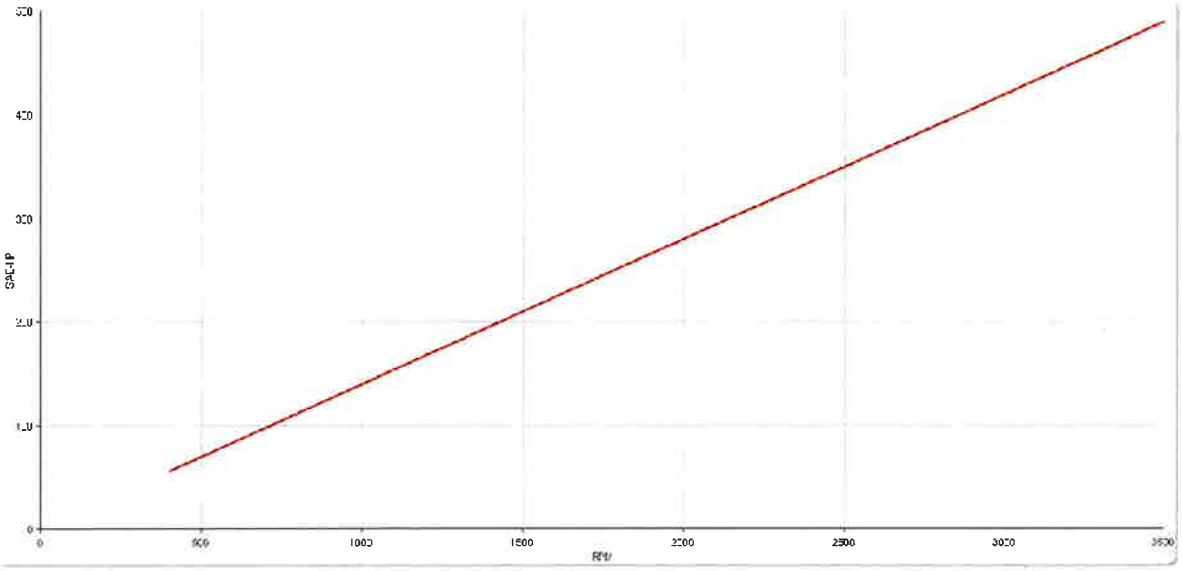

"A" POS = continuous running position (normally AHEAD). "B" POS = reverse position. B/W = Borg Warner adaptor.

Last Updated:07:58 PM GMT - 18-Nov-07

* Special Order Ratio

Medium Duty

	RATIOS		MAX. TORQUE		POWER/RPM		MAXIMUM RATED POWER						MAX. RPM
	'A' Pos	'B' Pos	Nm	ftlb	kW	hp	kW	hp	kW	hp	kW	hp	
							2100 rpm		2500 rpm		2800 rpm		
	1.644	1.638	849	626	0.0889	0.1192	187	250	222	298	249	334	3500
	2.008	1.996	849	626	0.0889	0.1192	187	250	222	298	249	334	3500
	2.493	2.468	800	590	0.0838	0.1123	176	236	209	281	235	315	3500

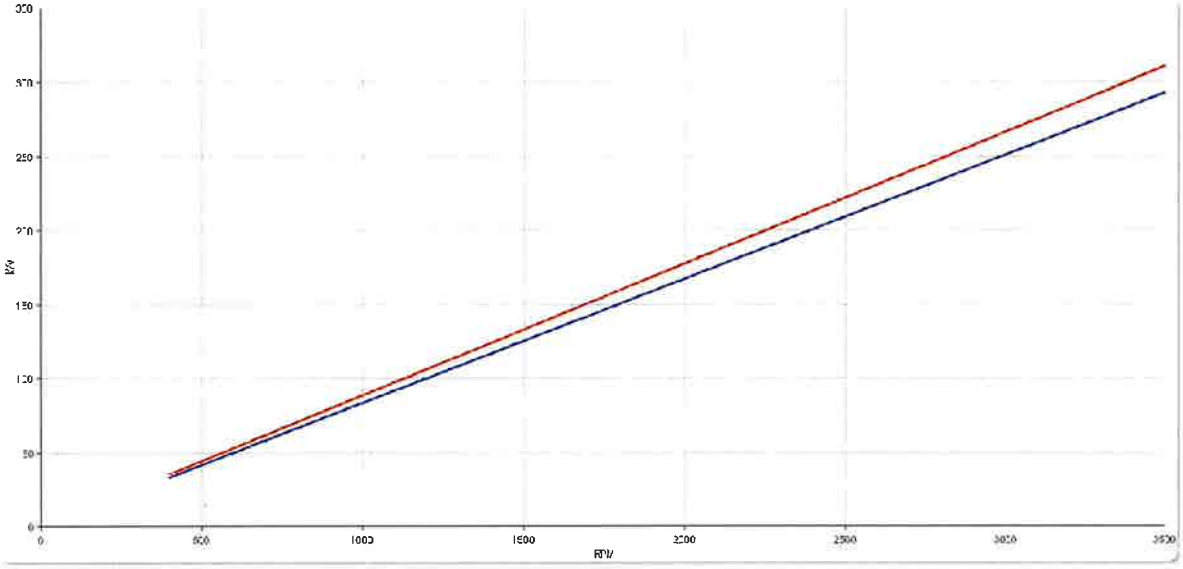

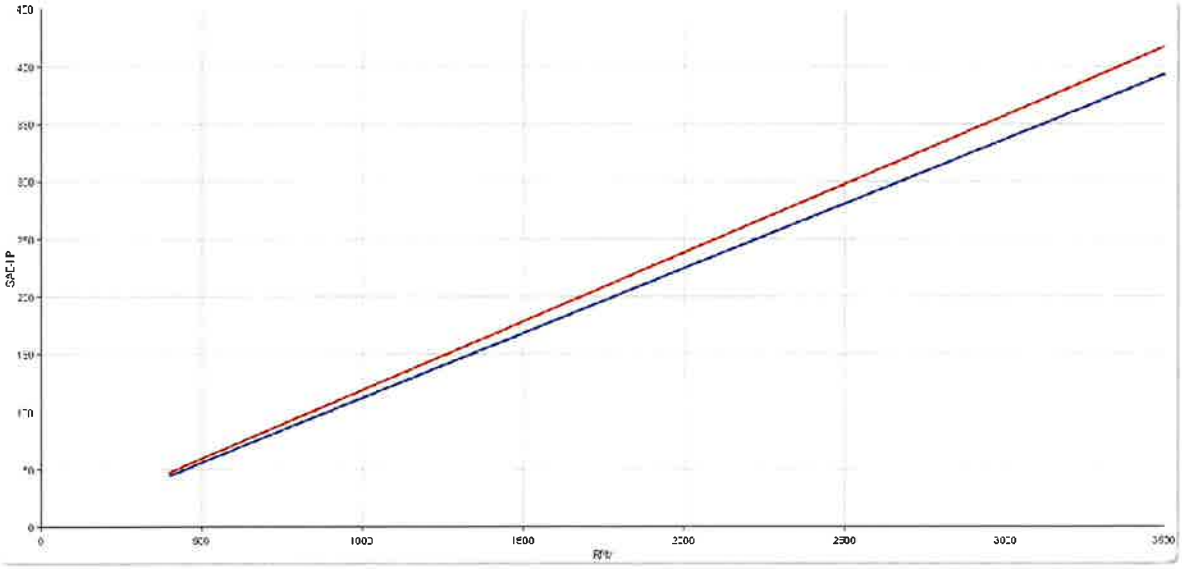

"A" POS = continuous running position (normally AHEAD). "B" POS = reverse position. B/W = Borg Warner adaptor.

Last Updated:07:58 PM GMT - 18-Nov-07

* Special Order Ratio

Continuous Duty

	RATIOS		MAX. TORQUE		POWER/RPM		MAXIMUM RATED POWER						MAX. RPM
	'A' Pos	'B' Pos	Nm	ftlb	kW	hp	kW	hp	kW	hp	kW	hp	
							1800 rpm		2100 rpm		2400 rpm		
	1.644	1.638	693	511	0.0726	0.0973	131	175	152	204	174	234	3200
	2.008	1.996	693	511	0.0726	0.0973	131	175	152	204	174	234	3200
	2.493	2.468	665	490	0.0696	0.0934	125	168	146	196	167	224	3200

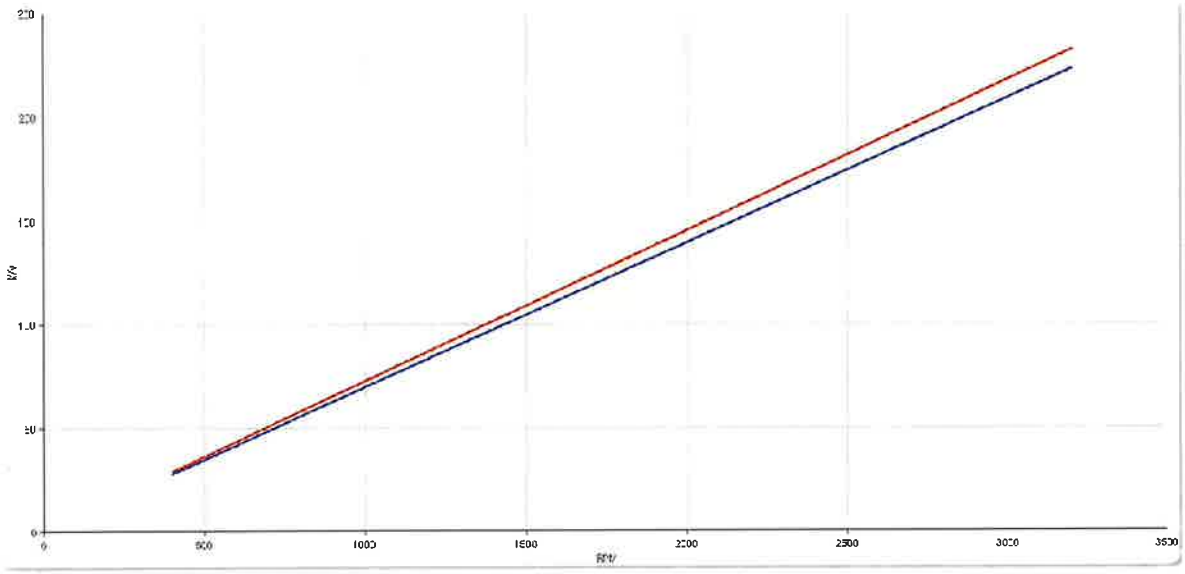

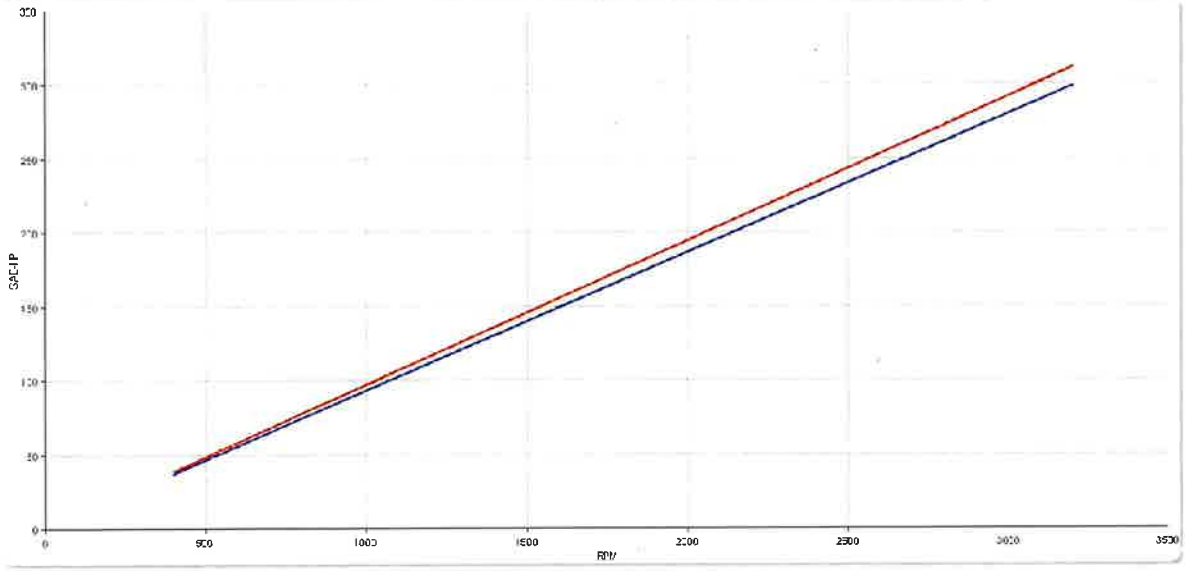

"A" POS = continuous running position (normally AHEAD). "B" POS = reverse position. B/W = Borg Warner adaptor.

Last Updated:07:58 PM GMT - 18-Nov-07

* Special Order Ratio

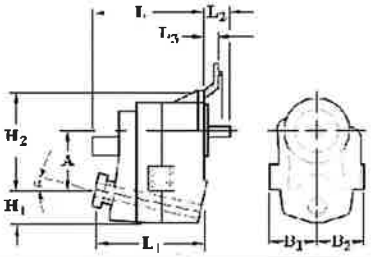

mm (inches)										
Angle	A	B_1	B_2	H_1	H_2	L	L_1	L_2	L_3	Bell Hsg.
12.0	246 (9.69)	190 (7.48)	190 (7.48)	132 (5.20)	389 (15.3)	370 (14.6)	375 (14.8)	76.0 (2.99)	11.0 (0.43)	3
Weight kg (lb)						Oil Capacity Litre (US qt)				
86.0 (189)						7.00 (7.40)				

SAE Bell Housing Dimensions

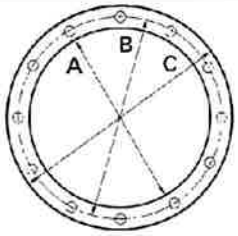

SAE No.	A		B		C		Bolt Holes		
							No.	Diameter	
	mm	in	mm	in	mm	in		mm	in
2	447.68	17.625	466.73	18.375	488.95	19.25	12	10.32	13/32

Output Coupling Dimensions

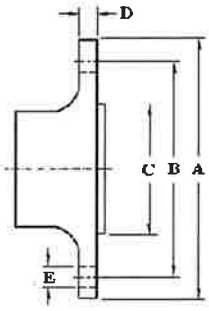

A		B		C		D		Bolt Holes		
								No.	Diameter (E)	
mm	in	mm	in	mm	in	mm	in		mm	in
146	5.75	121	4.75	76.2	3.00	16.0	0.63	6	13.0	0.51

Refer to the Installation Drawing for detail.

Duty Definitions

PLEASURE DUTY DEFINITION Highly intermittent operation with very large variations in engine speed and power
Average engine operating hours limit: 500 hours/year
300 hours/year for mechanical gearboxes
Typical hull forms: Planing.
Typical applications: Private, non-commercial, non-charter sport/leisure activities.

LIGHT DUTY DEFINITION Intermittent operation with large variations in engine speed and power
Average engine operating hours limit: 2500 hours/year
(for hydraulic gearboxes smaller than the ZF 650 series, 2000 hours/year).
Typical hull forms: Planing and semi-displacement.
Typical applications: Private and charter, sport/leisure activities, naval and police activities.

MEDIUM DUTY DEFINITION Intermittent operation with some variations in engine speed and power
Average engine operating hours limit: 4000 hours/year.
3500 hours/year for gearboxes smaller than ZF 2000 series and workboat ZF W2700 series.
Typical hull forms: Semi-displacement and displacement
Typical applications: Charter and commercial craft (example: crew boats and fast ferries), and naval and police activities.

CONTINUOUS DUTY DEFINITION Continuous operation with little or no variations in engine speed and power
Average engine operating hours limit: Unlimited
Typical hull forms: Displacement.
Typical applications: Heavy duty commercial vessels, tugs, fishing boats.

Duty Ratings

Ratings apply to marine diesel engines at the indicated speeds. At other engine speeds, the respective power capacity (kW) of the transmission can be obtained by multiplying the Power/Speed ratio by the speed.
Approximate conversion factors:

1 kW = 1.36 metric hp

1 kW = 1.34 U.S. hp (SAE)

1 U.S. hp = 1.014 metric hp

1 Nm = 0.74 lb.ft.

Ratings apply to right hand turning engines, i.e. engines having counterclockwise rotating flywheels when viewing the flywheel end of the engine. These ratings allow full power through forward and reverse gear trains, unless otherwise stated.
Contact your nearest ZF Sales and Service office for ratings applicable to gas turbines, gasoline (petrol) engines, as well as left hand turning engines, and marine transmissions for large horsepower capacity engines.
Ratings apply to marine transmissions currently in production or in development and are subject to change without prior notice.
NOTE: THE MAXIMUM RATED INPUT POWER MUST NOT BE EXCEEDED (SEE RESPECTIVE RATINGS IN THE TECHNICAL DATA SHEETS)

Safe Operating Notice

The safe operation of ZF products depends upon adherence to technical data presented in our brochures. Safe operation also depends upon proper installation, operation and routine maintenance and inspection under prevailing conditions and recommendations set forth by ZF. Damage to transmission caused by repeated or continuous emergency manoeuvres or abnormal operation is not covered under warranty. It is the responsibility of users and not ZF to provide and install guards and safety devices, which may be required by recognized safety standards of the respective country (e.g. for U.S.A. the Occupational Safety Act of 1970 and its subsequent provisions).

Monitoring Notice

The safe operation of ZF products depends upon adherence to ZF monitoring recommendations presented in our operating manuals, etc. It is the responsibility of users and not ZF to provide and install monitoring devices and safety interlock systems as may be deemed prudent by ZF. Consult ZF for details and recommendations.

Torsional Responsibility and Torsional Couplings

The responsibility for ensuring torsional compatibility rests with the assembler of the drive and driven equipment. ZF can accept no liability for gearbox noise caused by vibrations or for damage to the gearbox, the flexible coupling or to other parts of the drive unit caused by this kind of vibration. Contact ZF for further information and assistance. ZF recommends the use of a torsional limit stop for single engine powered boats, wherein loss of propulsion power can result in loss of control. It is the buyer's responsibility to specify this option, which can result in additional cost and a possible increase in installation length.

ZF can accept no liability for personal injury, loss of life, or damage or loss of property due to the failure of the buyer to specify a torsional limit stop. ZF selects torsional couplings on the basis of nominal input torque ratings and commonly accepted rated engine governed speeds. Consult ZF for details concerning speed limits of standard offering torsional couplings, which can be less than the transmission limit. Special torsional couplings may be required for Survey Society Ice Classification requirements.

2022.80 **BOARD OF CITY COUNCIL…SEPTEMBER 20, 2022**

BE IT ORDERED, that the Biddeford City Council does hereby grant approval pursuant with Title 15 M.R.S.A. §5824(3) & §5822(4)(A) to the transfer of 3,886.00 in U.S. Currency, or any portion thereof, on the grounds that the City of Biddeford Police Department did make a substantial contribution to the investigation of this or related criminal case. ALFSC-CR-18-1069. These funds shall be transferred to the City of Biddeford, Asset Forfeiture Account 3119-40576.

City Council Meeting

Meeting Date: September 20, 2022
Meeting Time: 6:00 P.M.

Agenda Item No: 2022.80
Item Description: Approval/Transfer of Funds – Police Department/Substantial Contribution in a Criminal Case

Submitted by: Roger P. Beaupre, Chief of Police

Supporting Information/Documentation:

As noted below, the transfer of asset forfeited money is controlled by State Statute, and these forfeited funds must be approved by the City Council.

Key Terms:

N/A

Executive Summary:

15 M.R.S.A. §5824(3) requires that, before any forfeitable item may be transferred toa State Agency, County or Municipality, the municipal legislative body must publicly vote to accept the item(s) if subsequently ordered forfeited by the Court;

Under Rules issued by the Department of the Attorney General, a public vote must bemade on each forfeiture "approval" and a "continuing resolution" of approval cannot be accepted.

Under the provisions of the Forfeiture Statute, if the municipal legislative body failsto approve a transfer in a timely manner, any forfeited items shall be transferred to the State of Maine General Fund.

Detailed Review:

This is York County Criminal Court Doc. No. CR-18-363 involving defendant Wayne Bonner, which resulted in Criminal Forfeiture of $3,886.00 payable to the City of Biddeford as a result of Biddeford Police Department's made a substantial contribution in the investigation and prosecution of Defendant Phelps in a criminal case.

Funding Source:

N/A

Staff Recommendation:

Accept Funds as required.

2022.81 **IN BOARD OF CITY COUNCIL..SEPTEMBER 2022**

BE IT ORDAINED, by the City Council of the City of Biddeford to amend the Code of Ordinances, **Chapter 2, Administration, Article I, In General**, by amending the following:

Section 2-2 Election Wards

In accordance with the **City Charter, Article III-City Council, Section 1-City to be divided into Wards**, the Ward boundaries shall be as follows:

Being more particularly bounded, described and shown as Ward 1 on a plan entitled, "City of Biddeford, Maine, Official Ward Map, Adopted by order of the Biddeford City Council, October 4, 2022" Scale: 1"=2,000', prepared by City of Biddeford, Maine Engineering Department-GIS Division and recorded in the City of Biddeford, Maine Engineering Department as plan D-1900.

City Council

Meeting Date: September 6, 2022
Meeting Time: 6:00 p.m.

Agenda Item No: Order of the Day 2022.81
Item Description: Amendment/Ch. 2-Administration/Sec. 2-2 Election Wards – Re-apportionment of Wards

Submitted by: Carmen Bernier, City Clerk

Supporting Information/Documentation:

Biddeford Street/Ward Listing with Proposed Changes
Detail of Proposed Changes
State Law on Reapportionment – MRS Title 30-A §2503

Key Terms:

N/A

Executive Summary:

Per City Charter, Biddeford must conduct a reapportionment of City Wards once every ten years. The last time a reapportionment was completed and approved was in 2014. Recently, the State conducted a redistricting of the State Legislative Districts, which typically is a good trigger for local reapportionment.

Detailed Review:

Per City Charter, "*The City Council shall, once every 10 years, by ordinance establish compact and contiguous wards of approximately equal population*." The attached ordinance amendment amends **Ch. 2, Administration, Sec. 2-2-Election wards** of the City's Code of Ordinances, and satisfies the Charter's stipulation of reapportionment.

The proposed reapportionment changes are being submitted after working with GIS mapping and voter registration information for the Central Voter Registration program, as well as 2020 Census information that could be somewhat easily gathered. {It is worth noting that Biddeford's population went from 21,277 in the 2010 Census to 22,552 in the 2020 Census.}

Ward 7 has historically been the lowest populated Ward due to the fact that much of Ward 7 falls in business and industrial zones. By moving the part of Granite Street from the intersection with West Street to the end, and all the side streets off of this part of Granite Street from Ward 3 to Ward 7, Ward 7 gains over 400 new voters and makes it more in line with the other Wards as far as population numbers. Further, it brings Ward 3 more in line as well, as it is no longer substantially larger in population numbers as it has historically been.

Funding Source:

The only cost to the reapportionment project is the postage to mail out letters to those voters whose Wards will change due to the reapportionment.

Staff Recommendation:

Staff recommends passage of this ordinance amendment, as it will keep the City compliant with the City Charter; as well as achieve the objective of having compact, contiguous and more equal Wards.

Redistricting 2022

Proposed Changes

Move from Ward 5 to Ward 4:	Number of Voters
93 – 289 Alfred Street (odd side only)	127

Move from Ward 3 to Ward 7:	Number of Voters
216 – 356 Granite Street (both sides)	181
Pine Cone Circle	11
Cherryfield Avenue	20
Bond Street	10
Breton Street	31
Cornerstone Drive	16
Jacqueline Drive	18
Ponderosa Lane	46
Ben Avenue	8
Lizotte Avenue	2
Charles Avenue	23
Vital Avenue	3
Dechene Avenue	6
Fleetwood Drive	5
Colony Drive	5
Merrill Street	11
Astro Lane	5
Commodore Drive	28
TOTAL:	**429**

Change in Registered Voters by Ward

Ward	*Current Registered Voters*		*Registered Voters after proposed changes*
1	2297		2297 (no change)
2	2300		2300 (no change)
3	2553	- 429	2124
4	2007	+ 127	2134
5	2463	- 127	2336
6	2376		2376 (no change)
7	1736	+ 429	2165

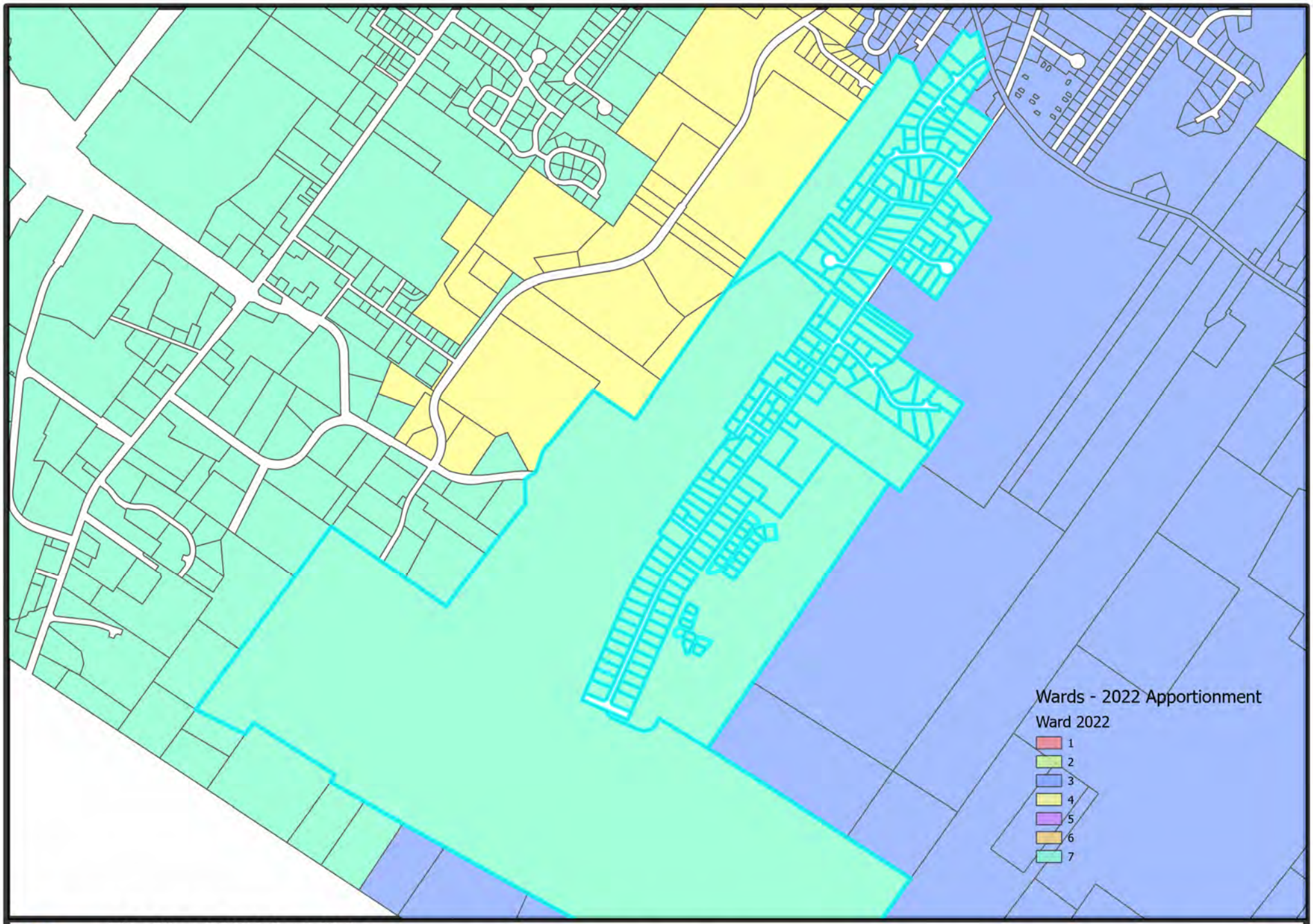

The City of Biddeford, Maine

Technologies Department - GIS Mapping

205 Main Street · P.O. Box 586 · Biddeford, Maine 04005-0586
Tel. 207-571-0660 · Email gis@biddefordmaine.org

This map was prepared by: BiddGIS

0 120 240 480 720 960 Feet

1:6,311

Ward Reapportionment - Ward 3 to 7

Document Path: S:\Departments\City Clerk\City Clerk\City Clerk.aprx

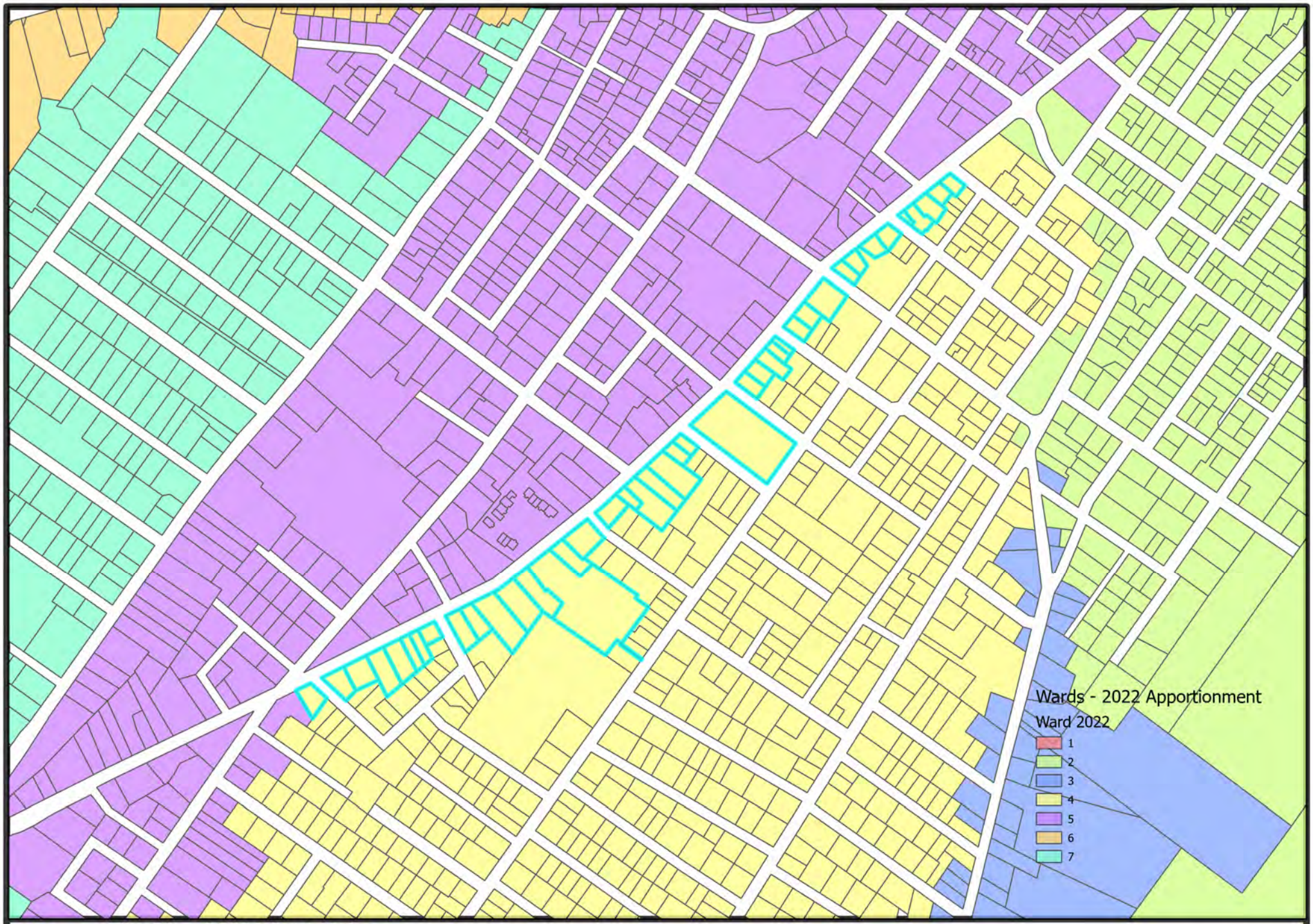

The City of Biddeford, Maine

Technologies Department - GIS Mapping

205 Main Street · P.O. Box 586 · Biddeford, Maine 04005-0586
Tel. 207-571-0660 · Email gis@biddefordmaine.org

This map was prepared by: BiddGIS

0 120 240 480 720 960 Feet

1:6,311

Ward Reapportionment - Ward 5 to 4

Document Path: S:\Departments\City Clerk\City Clerk\City Clerk.aprx

§2503. Reapportionment

1. Adoption by ordinance. Districts established for the purpose of electing, from each district, an equal number of municipal officers may be adjusted, by ordinance, by the municipal legislative body subject to the following conditions.

A. Each district must be formed of compact, contiguous territory. Its boundary lines may follow the center lines of streets. [PL 1987, c. 737, Pt. C, §2 and Pt (NEW); PL 1989, c. 6 (AMD); PL 1989, c. 9, §2 (AMD); PL 1989, c. 104, Pt. C, §§8, 10 (AMD).]

B. Each district must contain as nearly as possible the same number of inhabitants as determined according to the latest Federal Decennial Census, but districts may not differ in number of inhabitants by more than 10% of the inhabitants in the smallest district created. [PL 1987, c. 737, Pt. A, §2 (NEW); PL 1987, c. 737, Pt. C, §106 (NEW); PL 1989, c. 6 (AMD); PL 1989, c. 9, §2 (AMD); PL 1989, c. 104, Pt. C, §§8, 10 (AMD).]

C. The ordinance must include a map and a description of the districts. [PL 1987, c. 737, Pt. A, §2 (NEW); PL 1987, c. 737, Pt. C, §106 (NEW); PL 1989, c. 6 (AMD); PL 1989, c. 9, §2 (AMD); PL 1989, c. 104, Pt. C, §§8, 10 (AMD).]

D. The ordinance takes effect on the 30th day after adoption by the legislative body. The new districts and boundaries, as of the effective date, supersede previous districts and boundaries for the purposes of the next regular municipal election, including nominations. [PL 1987, c. 737, Pt. A, §2 (NEW); PL 1987, c. 737, Pt. C, §106 (NEW); PL 1989, c. 6 (AMD); PL 1989, c. 9, §2 (AMD); PL 1989, c. 104, Pt. C, §§8, 10 (AMD).]

[PL 1987, c. 737, Pt. A, §2 (NEW); PL 1987, c. 737, Pt. C, §106 (NEW); PL 1989, c. 6 (AMD); PL 1989, c. 9, §2 (AMD); PL 1989, c. 104, Pt. C, §§8, 10 (AMD).]

2. Failure to enact ordinance. The municipal legislative body must enact the reapportionment ordinance within 12 months after the Legislature has reapportioned the House and Senate districts pursuant to the Constitution of Maine, Article IV, Part First, Section 3 and Article IV, Part Second, Section 2 or after a court decision finalizing the reapportionment of districts. The ordinance must be enacted at least 90 days before a regular municipal election occurring within that 12-month period or the previous reapportionment ordinance applies to that election. If the legislative body fails to enact an ordinance within the 12-month period or at least 90 days before a regular election occurring after the 12-month period, all municipal officers to be elected must be elected at large and serve until their terms expire. Such at-large elections continue until the legislative body enacts an ordinance in accordance with subsection 1 at least 90 days before a regular municipal election.
[PL 2001, c. 537, §1 (AMD); PL 2001, c. 537, §2 (AFF).]

3. Referendum. Except when the municipal legislative body is the town meeting, the voters of the municipality may require the municipal legislative body to reconsider any ordinance adopted under subsection 1. If the legislative body does not repeal an ordinance so reconsidered, the voters may approve or reject it at a municipal election.

A. Any 5 voters may commence referendum proceedings by filing an affidavit with the municipal clerk stating:

(1) They will constitute the petitioners' committee;

(2) They will be responsible for circulating the petition and filing it in proper form;

(3) Their names and addresses;

(4) The address to which all notices to the committee are to be sent; and

(5) The ordinance sought to be reconsidered.

Promptly after the affidavit of the petitioners' committee is filed, the clerk shall issue the appropriate petition blanks to the petitioners' committee. [PL 1987, c. 737, Pt. A, §2 (NEW); PL 1987, c. 737, Pt. C, §106 (NEW); PL 1989, c. 6 (AMD); PL 1989, c. 9, §2 (AMD); PL 1989, c. 104, Pt. C, §§8, 10 (AMD).]

B. Petitions under this subsection must meet the following requirements.

(1) Petitions must be signed by a number of voters of the municipality equal to at least 15% of the total number of voters in the municipality at the last presidential election.

(2) All papers of a petition shall be uniform in size and style and shall be assembled as one instrument for filing. Each signature must be executed in ink or indelible pencil and must be followed by the address of the person signing. While being circulated, petitions must have the full text of the ordinance sought to be reconsidered contained in or attached to the petition.

(3) When filed, each paper of a petition must have an affidavit, executed by the circulator of the petition, attached to it stating:

(a) That the circulator personally circulated the paper;

(b) The number of signatures on the paper;

(c) That all the signatures were signed in the circulator's presence;

(d) That the circulator believes them to be the genuine signatures of the persons whose names they purport to be; and

(e) That each signer had an opportunity before signing to read the full text of the ordinance sought to be reconsidered.

(4) Petitions must be filed within 30 days after the municipal legislative body adopts the ordinance sought to be reconsidered. [PL 1987, c. 737, Pt. A, §2 (NEW); PL 1987, c. 737, Pt. C, §106 (NEW); PL 1989, c. 6 (AMD); PL 1989, c. 9, §2 (AMD); PL 1989, c. 104, Pt. C, §§8, 10 (AMD).]

C. The following procedure shall be followed after the petition is filed with the municipal clerk.

(1) Within 20 days after the petition is filed, the municipal clerk shall complete a certificate as to its sufficiency, specifying, if it is insufficient, the particulars which render it defective. The clerk shall promptly send a copy of the certificate to the petitioners' committee by registered mail. A petition certified insufficient for lack of the required number of valid signatures may be amended once if the petitioners' committee files a notice of intention to amend it with the clerk within 2 days after receiving the copy of the clerk's certificate and files a supplementary petition upon additional papers within 10 days after receiving a copy of the certificate. This supplementary petition must comply with the requirements of paragraph B, subparagraphs (2) and (3). Within 5 days after it is filed, the clerk shall complete a certificate as to the sufficiency of the petition as amended and promptly send a copy of that certificate to the petitioners' committee by registered mail as in the case of an original petition. If a petition or amended petition is certified insufficient and the petitioners' committee does not elect to amend the petition or request review under subparagraph (2), within the time required, the clerk shall promptly present the clerk's certificate to the municipal legislative body and the certificate is then a final determination as to the sufficiency of the petition.

(2) If a petition has been certified insufficient and the petitioners' committee does not file notice of intention to amend it or if an amended petition has been certified insufficient, the committee, within 2 days after receiving the copy of the certificate, may file a request that it be reviewed by the municipal legislative body. The legislative body shall review the certificate at its next meeting following the filing of the committee's request and approve or disapprove it. This determination is then final as to the sufficiency of the petition.

(3) A final determination as to the sufficiency of a petition is subject to court review. A final determination of insufficiency, even if sustained upon court review, does not prejudice the filing of a new petition for the same purpose. [PL 1987, c. 737, Pt. A, §2 (NEW); PL 1987, c. 737, Pt. C, §106 (NEW); PL 1989, c. 6 (AMD); PL 1989, c. 9, §2 (AMD); PL 1989, c. 104, Pt. C, §§8, 10 (AMD).]

D. When a petition is filed with the clerk under this subsection, the ordinance sought to be reconsidered is suspended from taking effect. This suspension ends when:

(1) There is a final determination of insufficiency of the petition;

(2) The petitioners' committee withdraws the petition;

(3) The council repeals the ordinance; or

(4) Thirty days have elapsed after a vote of the municipality on the ordinance. [PL 1987, c. 737, Pt. A, §2 (NEW); PL 1987, c. 737, Pt. C, §106 (NEW); PL 1989, c. 6 (AMD); PL 1989, c. 9, §2 (AMD); PL 1989, c. 104, Pt. C, §§8, 10 (AMD).]

E. The following procedure shall be followed if a petition is determined to be sufficient.

(1) When a petition has been finally determined sufficient, the municipal legislative body shall promptly reconsider the referred ordinance by voting its repeal. If the legislative body fails to repeal the referred ordinance within 30 days after the date the petition was finally determined sufficient, it shall submit the referred ordinance to the voters of the municipality.

(2) The vote of the municipality on a referred ordinance shall be held at least 30 days and not more than one year after the municipal legislative body's final vote on the ordinance. If no regular municipal election is to be held within this period, the legislative body shall provide for a special election; otherwise the vote shall be held at the same time as a regular election occurring within this period, except that the legislative body, in its discretion, may provide for a special election at an earlier date within the prescribed period. Copies of the referred ordinance shall be made available at the polls.

(3) The form of the ballot for the repeal of the ordinance shall be substantially as follows:

"Shall the ordinance entitled '.....' be repealed?

YES / / NO / /"

(The voters shall indicate their choice by a cross or check mark placed in the appropriate box opposite the words YES or NO.)

(4) A petition may be withdrawn at any time before the 15th day prior to the day scheduled for a vote of the municipality. The petitioners' committee must file with the municipal clerk a request for withdrawal signed by at least 4 members of the petitioners' committee. Upon filing this request, the petition has no further effect and all proceedings on the petition shall be terminated. [PL 1987, c. 737, Pt. A, §2 (NEW); PL 1987, c. 737, Pt. C, §106 (NEW); PL 1989, c. 6 (AMD); PL 1989, c. 9, §2 (AMD); PL 1989, c. 104, Pt. C, §§8, 10 (AMD).]

F. If a majority of the voters who vote on a referred ordinance vote for its repeal, it is considered repealed upon certification of the election results. [PL 1989, c. 6 (AMD); PL 1989, c. 9, §2 (AMD); PL 1989, c. 104, Pt. A, §16 (AMD); PL 1989, c. 104, Pt. C, §§8, 10 (AMD).]

[PL 1989, c. 6 (AMD); PL 1989, c. 9, §2 (AMD); PL 1989, c. 104, Pt. A, §16 (AMD); PL 1989, c. 104, Pt. C, §§8, 10 (AMD).]

4. Exception. This section does not apply to municipalities whose charters specify different methods of reapportionment.

[PL 1987, c. 737, Pt. A, §2 (NEW); PL 1987, c. 737, Pt. C, §106 (NEW); PL 1989, c. 6 (AMD); PL 1989, c. 9, §2 (AMD); PL 1989, c. 104, Pt. C, §§8, 10 (AMD).]

2022.82 **IN BOARD OF CITY COUNCIL..SEPTEMBER 20, 2022**

BE IT ORDERED, that the City Manager be authorized to enter into an agreement with United Construction & Forestry for one 2022 John Deere Motor Grader 672G and one Henke 12' Postless Grader Wing (for snow plowing); as well as a set of winter tires from New England Truck Tires in an amount not to exceed $342,846.70, broken down as follows:

- 2022 John Deere Motor Grader 672G - $337,000 (minus trade in of $28,000) = $309,000
- Grader Wing (for snow plowing) = $24,938
- Winter Tires (from New England Truck Tires) = $8908.70
- **TOTAL: $342,846.70**

Funds for this purchase to come from the FY22 CIP.

Note: The Finance Committee will consider this item at their September 20, 2022 meeting and make a recommendation to the Council.

Finance Committee/City Council

Meeting Date: 9/20/2022
Meeting Time: 5:00 pm/6:00 pm

Agenda Item No: 9.e
Item Description: 2022.82) Authorization/Purchase Grader

Submitted by: Jeff Demers, Public Works Director
Jerry Court, DPW Garage Manager

Supporting Information/Documentation:

- Source well bidding
- John Deere 672G Grader
- Grader wing
- Winter tires

Executive Summary:

The Public Works Department is seeking approval to purchase (1) John Deere motor grader 672G. (1) Henke 12' postless Grader wing. (1) set of Winter tires through New England truck tire.

Detailed Review:

Public Works is requesting to purchase a new 2022 John-Deere grader and wing. Source well was used as the bidding process. Staff is recommending purchasing a set of winter tires through New England truck tire. The reason for the separate tire purchase is due to the fact that the grader comes stock with summer tires. The city will be saving a total of $4,092.00 purchasing the winter tires through new England tire.

Public works is looking for the authorization from finance and council to move forward with the purchase of one grader from United Construction.

Funding Source:

John Deere Grader, wing and tires are being funded by the 2022 Capital Improvement plan.

Staff Recommendation:

Staff is recommending the purchase through United Construction for a total price of

- Grader New $337,000 – Trade $28,000 Total sum = $309,000
- Grader Wing for snow plowing $24,938
- Winter tires (New England truck tire) $8908.70

Grand Total = $342,846.70

FORM E

CONTRACT ACCEPTANCE AND AWARD

(Top portion of this form will be completed by Sourcewell if the vendor is awarded a contract. The vendor should complete the vendor authorized signatures as part of the RFP response.)

Sourcewell Contract #: 032119-JDC

Proposer's full legal name: John Deere Construction Retail Sales

Based on Sourcewell's evaluation of your proposal, you have been awarded a contract. As an awarded vendor, you agree to provide the products and services contained in your proposal and to meet all the terms and conditions set forth in this RFP, in any amendments to this RFP, and in any exceptions that are accepted by Sourcewell.

The effective date of the Contract will be May 13, 2019 and will expire on May 13, 2023 (no later than the later of four years from the expiration date of the currently awarded contract or four years from the date that the Sourcewell Chief Procurement Officer awards the Contract). This Contract may be extended for a fifth year at Sourcewell's discretion.

Sourcewell Authorized Signatures:

DocuSigned by:
Jeremy Schwartz
C0ED2A139D06489...
SOURCEWELL DIRECTOR OF OPERATIONS AND PROCUREMENT/CPO SIGNATURE

Jeremy Schwartz
(NAME PRINTED OR TYPED)

DocuSigned by:
Chad Coauette
7E4288F817A84CC...
SOURCEWELL EXECUTIVE DIRECTOR/CEO SIGNATURE

Chad Coauette
(NAME PRINTED OR TYPED)

Awarded on May 10, 2019

Sourcewell Contract # 032119-JDC

Vendor Authorized Signatures:

The Vendor hereby accepts this Contract award, including all accepted exceptions and amendments.

Vendor Name John Deere Construction Retail Sales

Authorized Signatory's Title Manager, Contract Sales

Mark Oliver

VENDOR AUTHORIZED SIGNATURE

Mark Oliver
(NAME PRINTED OR TYPED)

Executed on 10 May, 2019

Sourcewell Contract # 032119-JDC

Sourcewell
Formerly NJPA

Proposal Opening Record

Date of opening: March 22, 2019

The public opening of all responses received to the Request For Proposal #032119 for the procurement of HEAVY CONSTRUCTION EQUIPMENT WITH RELATED ACCESSORIES, ATTACHMENTS, AND SUPPLIES was witnessed by the following individuals:

Carol Jackson, Sourcewell
Sheila Christoffersen, Sourcewell
Kim Austin, Sourcewell
Steff Haataja, Sourcewell
Greg Grunig, Sourcewell
Craig West, Sourcewell
James Voelker, Sourcewell
Michael Munoz, Sourcewell
Scott Carr, Sourcewell
Chris Robinson, Sourcewell
Josh Meech, Sourcewell

Responses were received from the following:

BOMAG Americas, Inc. - received 3/21/19 at 11:25:14 AM
Proposer deemed responsive
Caterpillar Inc. – received 3/15/19 at 11:08:37 AM
Proposer deemed responsive
CNH Industrial America LLC – received 3/15/19 at 11:08:27 AM
Proposer deemed responsive
Doggett Heavy Machinery - received 3/20/19 at 11:48:28 AM
Proposer deemed Level-One Non-Responsive
Form A not completed
Form C not signed
Form P not completed
Doosan Infracore North America, LLC – received 3/19/19 at 11:33:03 AM
Proposer deemed responsive
Dynapac North America LLC – received 3/20/19 at 11:05:58 AM
Proposer deemed responsive
Certificate of Insurance omitted
Grove U.S. L.L.C. (dba Manitowac) - received 3/19/19 at 11:17:18 AM
Proposer deemed responsive
Hyundai Construction Equipment Americas, Inc. – received 3/20/19 at 11:05:26 AM
Proposer deemed responsive
John Deere Construction Retail Sales - received 3/19/19 at 11:17:12 AM
Proposer deemed responsive

Sourcewell
Formerly NJPA

Kobelco Construction Machinery USA, Inc. – received 3/12/19 at 11:55:55 AM
Proposer deemed responsive
Komatsu America Corp. – received 3/19/19 at 11:32:55 AM
Proposer deemed responsive
Link Belt Cranes - received 3/21/19 at 11:25:06 AM
Proposer deemed responsive
Roadtec, Inc – received 3/19/19 at 11:32:46 AM
Proposer deemed responsive
Volvo Construction Equipment North America, LLC – received 3/18/19 at 11:45:54 AM
Proposer deemed responsive
Addendum One omitted
Volvo Construction Equipment North America, LLC – received 3/20/19 at 11:48:32 AM
Proposer deemed responsive
Addendum One added to original proposal
Wirtgen America, Inc. – received 3/20/19 at 11:05:34 AM
Proposer deemed responsive

Proposals are evaluated first on level-one responsiveness and that determination is noted above. Level-one responsiveness requires, among other things, that the response be received before the deadline for the submission and that the response include completed copies (with signatures) of the requested forms.

Proposers that are deemed level-one responsive must provide any missing documentation or remedy a noted deficiency within a reasonable time in order to remain responsive. Respondents must not provide additional substantive information when sending missing documentation.

DocuSigned by:
James Voelker
15F6CCFFA61E4A0...

James Voelker, CPCM, CFCM, Procurement Lead Analyst

DocuSigned by:
Carol Jackson
6EE63AEDED5F46E...

Carol Jackson, Procurement Analyst III

JOHN DEERE

Quote Id: 27348892

30 August 2022

JERRY COURT
CITY OF BIDDEFORD
PUBLIC WORKS DEPARTMENT
BIDDEFORD, ME 04005

Thank you for the opportunity to quote a new 2022 John Deere 672G AWD Motor Grader IN STOCK.

Included in the quote attached:
Full machine standard factory warranty for 12 months unlimited hours

72 Month / 3,000 Hours of Powertrain Plus hydraulics Extended Warranty

FULL TEST or TECHNICAL Manuals on USB (what our techs have)

Delivery to HP Fairfield for Wing install and transportation back to City of Biddeford. (HP FAIRFIELD PLOW QUOTE NOT INCLUDED IN THIS QUOTE)

JDLINK Unlimited

Operator training and Operators Manual

Transportation of trade grader to Westbrook

Thank you and I look forward to earning your business,
Peter Sanborn 207-274-0896

PETER SANBORN
207-773-3777
United Construction & Forestry

JOHN DEERE

Quote Summary

Prepared For:
JERRY COURT
CITY OF BIDDEFORD
JERRY COURT
PUBLIC WORKS DEPARTMENT
371 Hill St
BIDDEFORD, ME 04005
Mobile: 207-282-1579
Jerry.court@biddefordmaine.org

Prepared By:
PETER SANBORN
United Construction & Forestry
396 County Road
Westbrook, ME 04092
Phone: 207-773-3777
peter.sanborn@ucfne.com

Quote Id: 27449826
Created On: 16 September 2022
Last Modified On: 16 September 2022
Expiration Date: 23 September 2022

Equipment Summary	Selling Price		Qty		Extended
2022 JOHN DEERE 672G MOTOR GRADER with 6WD - 1DW672GPJNF715832	$ 337,000.00	X	1	=	$ 337,000.00
PTH extended Warranty 72 Months/3000 Hours	$ 0.00	X	1	=	$ 0.00
Equipment Total					**$ 337,000.00**

Trade In Summary	Qty	Each	Extended
1988 CATERPILLAR 140G - 72V11135	1	$ 28,000.00	$ 28,000.00
PayOff			$ 0.00
Total Trade Allowance			$ 28,000.00
Trade In Total			**$ 28,000.00**

Quote Summary	
Equipment Total	$ 337,000.00
Trade In	$ (28,000.00)
Filing / Origination Fees	$ 0.00
SubTotal	$ 309,000.00
Est. Service Agreement Tax	$ 0.00
Total	$ 309,000.00
Down Payment	(0.00)
Rental Applied	(0.00)
Balance Due	**$ 309,000.00**

Salesperson : X _____

Accepted By : X _____

JOHN DEERE

Selling Equipment

Quote Id: 27348892 **Customer:** CITY OF BIDDEFORD

2022 JOHN DEERE 672G MOTOR GRADER with 6WD - 1DW672GPJNF715832

Hours: 3
Stock Number: 298000

Code	Description	Qty
8450T	JOHN DEERE 672G MOTOR GRADER	1
	Standard Options - Per Unit	
170K	JDLINK	1
1020	ELECTRO HYDRAULIC CONTROLS	1
1140	9.0L ENG,EPA FINAL TIER IV	1
1240	ALTERNATOR 200 AMP	1
1310	QUICK SERVICE GROUP	1
1410	STANDARD FUEL LINES	1
1610	HYDRAULIC PUMP DISCONNECT	1
1830	BLACK EXHAUST STACK	1
1910	BLADE IMPACT ABSORPTION SYST	1
2080	14'X27"X1" MB (8" CE X3/4")	1
2575	NOT TOPCON READY	1
2605	ENGLISH LABELS & DECALS	1
2775	NO TOPCON RADIO INSTALLATION	1
2820	SNGL INPUT W/ SLIP CLUTCH	1
4924	17.5R25 G2/L2 1*NBP 3PC RIM	1
5060	EH LOW CAB W/ WINDOWS	1
5520	NO AUTOSHIFT TRANSMISSION	1
5710	TRANS VALVE SOLENOID GUARD	1
5830	HYDRAU ALL SEASON XR	1
6030	NO CAB PRECLEANER	1
6140	PREM POST/CONT FAB EH CNTRLS	1
6590	EH FRT W 1AUX/MID W 3AUX	1
6650	EH PLACE HOLDER	1
6750	NO FRONT MOUNTED ATTACHMENTS	1
6850	NO REAR MOUNTED ATTACHMENTS	1
7160	DLX LIGHTING PKG W/HAL +8XTR	1
7820	NO FRONT FENDERS	1
8120	CONVERTER, 25 AMP 24V TO 12V	1
8220	MIRRORS, EXTERNAL HEATED	1
8310	LOWER FRONT INT WIPER/WASHER	1
8415	RADIO AM/FM/WB BLUETOOTH	1
8510	A/C - CHARGE	1

JOHN DEERE

Selling Equipment

Quote Id: 27348892 **Customer:** CITY OF BIDDEFORD

8720	NO SOUND ABSORPTION PKG	1
8830	REAR CAMERA (R4)	1
9210	PEDAL DECELERATOR	1
9220	FIRE EXTINGUISHER	1
9280	SMV SIGN WITH BRACKET	1
9295	LH FLIP DOWN BEACON BRACKET	1
9360	HEATER ENG COOLANT	1
9370	ETHER AID - LESS CANISTER	1
9724	L2 1* NBP 3PC RIM	1
	Dealer Attachments	
.	MAXAM MS202 SNOWXTRA 2* TL 17.5R25 RADIAL SNOW TIRES - INSTALLED	6
	Value Added Services	
	PTH extended Warranty 72 Months/3000 Hours	
	Other Charges	
	Freight	1
	Setup	1
	freight to HP Fairfield and to customer	1
	Snow Tires Installed	1
	Discount	1
	PDI	1

JOHN DEERE

Trade In

Quote Id: 27348892 **Customer:** CITY OF BIDDEFORD

Machine Details	**1988 CATERPILLAR 140G** **SN# 72V11135**
Description **1988 CATERPILLAR 140G** **SN# 72V11135** **Your Trade In Description**	**Net Trade Value** **$ 28,000.00**
Additional Options	
Hour Meter Reading	9178

CENTRAL MAINE
9 Green St/P.O. Box 188
Skowhegan, ME 04976
P: (207) 474-9836
F: (207) 474-6526
Toll Free (800) 356-2813

Sales Quote

IMPORTANT: All invoices are due and payable in U.S. Dollars in Guadalupe County, Texas, or where indicated below. No goods to be returned without our written permission. Goods must be returned transportation charges pre-paid. A handling charge will be made on all returned goods. LATE CHARGE: A late charge of 1.5% of any past due balance of the dealers account as of the last day of the month will be billed as of the 15th day of the following month if payment has not been received by that date.

CUSTOMER NO	823158	TERRITORY	390	PAGE 1
ORDER DATE	08/29/2022	CUSTOMER PO	79297HOLSTON	
QUOTE DATE	08/29/2022	SHIPPED VIA		
SALES ORDER	6653746 - SQ	FREIGHT TERMS	EXW- CUSTOMER FRT ACCOUNT	
		EX2	DIRECT BILL TRANSER AT ORIGIN	
PAYMENT TERMS	Net 30 Days from Invoice Date		CODE	002
DELIVERY INSTRUCTIONS:				
		REQUESTED SHIP DATE	08/29/2022	

SOLD TO:
CITY OF BIDDEFORD CHP
371 HILL ST
BIDDEFORD ME 04005-4335

SHIP TO:
CITY OF BIDDEFORD CHP
371 HILL ST
BIDDEFORD ME 04005-4335

DESCRIPTION/REMARKS

HENKE PLHW-FL12 - 12' POSTLESS HYDRAULIC GRADER WING

12' MOLDBOARD LENGTH, 3/16" THICK HIGH TENSILE STEEL ROLLED PLATE W/ BOX PANELED DESIGN, LEADING END HEIGHT OF 28" & DISCHARGE END HEIGHT OF 38"

POSTLESS MOTOR GRADER WING DESIGN WILL ALLOW FOR 26" OF BENCHING HEIGHT WHILE GIVING THE OPERATOR IMPROVED VISIBILITY FROM THE CAB & INCLUDES 6" OF MECHANICAL FLOAT, MUDROC VALVE THAT PREVENTS DAMAGE TO MOLDBOARD STOW CYLINDER THAT COULD OCCUR WHEN MACHINE ARTICULATES

PUSH-BEAM MOUNT TO REAR RIPPER - Please verify at time of order

SINGLE, NON-HYDRAULIC, SPRING-CUSHIONED PUSH-BEAM W/ MANUAL ADJUSTMENT FOR SWATH CONTROL

INCLUDES PIPE BRACES, POST ATTACH PLATE, WING SAFETY CHAIN, HARDWARE BAG, UNIVERSAL HOSE KIT, 3/4" X 6" SAE 1084 HIGH CARBON STEEL CUTTING EDGE

INSTALLED & PAINTED - POST & REAR PAINTED JD GRAY - MOLDBOARD & PUSHBEAM PAINTED JD YELLOW

LEAD TIME IS 60-90 DAYS
QUOTE VALID FOR 30 DAYS

SIGNATURE _____

PRINT _____ DATE _____

STEVE HOLSTON
207-468-8453
SteveHolston@HPFairfield.com

ITEM NUMBER	BRANCH	DESCRIPTION	PICK SLIP#/ LOT/SERIAL	QUANTITY SHIPPED	LIST PRICE	DISC%	EXTENDED AMOUNT
WINGSYSHPF	9335	WING SYSTEM QUOTE		1	24,938.00	0	24,938.00

REMARKS	NET DUE	CASH DISC.	IF PAID BY		
	24,938.00	0.00	09/28/2022	SUB-TOTAL	24,938.00
				FREIGHT & HANDLING	0.00
				SALES TAX	0.00
				TOTAL(USD)	24,938.00
				PREPAID AMOUNT	

IMPORTANT: Alamo Group or affiliates (Alamo Group) shall not be liable to any person for any claim for injuries or damages which claim for injuries or damages arises out of or which results from the repair of this product by a person or firm other than Alamo Group. Repair parts are intended for use only on equipment manufactured or sold by Alamo Group. Our general conditions of purchase are available at this address: https://www.alamo-group.com/terms

NEW ENGLAND TRUCK TIRE Centers, Inc.

Remit to: 38 Rainbow Lane, Sanford ME 04073

1:22 PM

Reprint

ORDER NBR	CUSTOMER
132562-02	3893
ORDER DATE	**Whse**
9/8/2022	02

Standard Order

** Acknowledgement **

SOLD TO:
BIDDEFORD DPW
371 HILL STREET
BIDDEFORD, ME 04005

Attn: KARA COTE
Phone: 207-282-1579
Fax: 207-286-9395

SHIP TO:
BIDDEFORD DPW
371 HILL STREET
BIDDEFORD, ME 04005

Attn: KARA COTE
Phone: 207-282-1579

FLEET NUMBER	MILEAGE	CUST P. O.	TERMS		W/O #
			NET 1st 10th		
VIN	**VEHICLE DESCRIPTION**	**LICENSE**	**TECH I D**	**SALES I D**	**WRITTEN BY**
	grader		ZREIN	ZREIN	RBRAG

Item Number / Description	QTY	Unit Price	EXCISE TAX	Extension
OLAB OTR LABOR	4	$164.95	$0.00	$659.80 N
FSC FUEL SURCHARGE	1	$21.50	$0.00	$21.50 G
PTS OR25T O-Rings MISC PARTS	6	$20.00	$0.00	$120.00 G
TOLL TOLL CHARGES	2	$4.00	$0.00	$8.00 G
MIL MILEAGE CHARGE	32	$1.75	$0.00	$56.00 N
99466 17.5R25 SNO PLUS M&S	6	$2,185.60	$0.00	$13,113.60 G
04118 17.5R25 XTLA G2, L2 *	-6	$921.20	$0.00	($5,527.20) G
DM 17.5R25 MOUNT AND DISMOUNT	6	$75.00	$0.00	$450.00 N
SS SHOP SUPPLY SHOP SUPPLY	1	$7.00	$0.00	$7.00 N

MISC/SUPPLIES	FREIGHT	EXCISE TAX	MERCHANDISE	LABOR	TAXABLE TOTAL	NON-TAX TOTAL
$0.00	$0.00	$0.00	$7,735.90	$1,172.80	$0.00	$8,908.70

Subtotal: $8,908.70
5.5% Sales Tax: $0.00

Received by: _____ PRINT NAME _____

Signature _____

TOTAL: $8,908.70

IN BOARD OF CITY COUNCIL…SEPTEMBER 20, 2022

ORDERED, that I, Alan M. Casavant, Mayor of the City of Biddeford, do hereby appoint:

Israa Enan
34 Cutts Street, #201
Ward 5

to the *Recycling & Waste Management Commission*, replacing Richard Potvin, for a term to expire December 2025.

CITY OF BIDDEFORD

Application for
City Committees, Commissions and Boards

Date: 8/23/2022

Name: Israa Enan

Street Address: 34 cutts st #201

biddeford ME 04005

Mailing Address:
(if different)

Phone Number(s): 207-239-2378

Email Address: Israaenan85@gmail.com

Which City Committee, Board or Commission do you request to be appointed to:

- [ ] Airport Commission
- [ ] Biddeford Citizens Advisory Committee
- [ ] Biddeford Fire Advisory Committee
- [ ] Biddeford Housing Authority
- [ ] Biddeford Police Advisory Committee
- [ ] Board of Assessment Review
- [ ] Cable T.V. Committee
- [ ] Capital Projects Committee
- [ ] Conservation Commission
- [x] Diversity, Equity and Inclusion Committee
- [x] Downtown Development Commission
- [x] Economic Improvement Commission
- [ ] Harbor Commission
- [ ] Historic Preservation Commission
- [x] Planning Board
- [ ] Policy Committee
- [ ] Project Canopy Committee
- [ ] Recreation Commission
- [x] Recycling & Solid Waste Management Commission
- [ ] Shellfish Conservation Committee
- [ ] Wastewater Management Commission
- [ ] Zoning Board of Appeals
- [ ] Other:

CITY OF BIDDEFORD
Committee Application

Please list any prior experience serving on any Public Boards, Commissions or Committees (and approximate dates)

I had served as a board member at Gateway Community Service in Portland ME where we discussed issues that our community face and come up with solution.

Please list any other experience that may be pertinent to the Board or Committee in which you are requesting to serve on.

I believe that I am capable of providing new ideas and suggestions to make this city grow in a healthy way and attract more people to come and see it. Most importandly is to make it livable to the people of Biddeford.

Please provide a brief statement describing your interest in serving the City of Biddeford.

I moved to Biddeford about more than a year ago and snice than I have felt very welcoming and loved. I want to give back to my communty (Biddeford) and contuine to make sure this city is welcoming and diverse.

Attach any additional information to this application and return it to the City Clerk's Office.

IN BOARD OF CITY COUNCIL…SEPTEMBER 20, 2022

ORDERED, that I, Alan M. Casavant, Mayor of the City of Biddeford, do hereby appoint:

William Stepchew
86 Old Pool Road
Ward 1

to the *Shellfish Conservation Committee,* for a term to expire in December 2025.

CITY OF BIDDEFORD

Application for
City Committees, Commissions and Boards

Date: March 04 2022

Name: WILLIAM STEPCHEW

Street Address: 86 OLD POOL ROAD
BIDDEFORD ME 04005

Mailing Address:
(if different)

Phone Number(s): ~~[illegible]~~ 808 635 4021

Email Address: billstepchew@gmail.com

Which City Committee, Board or Commission do you request to be appointed to:

- [ ] Airport Commission
- [ ] Biddeford Citizens Advisory Committee
- [ ] Biddeford Fire Advisory Committee
- [ ] Biddeford Housing Authority
- [ ] Biddeford Police Advisory Committee
- [ ] Board of Assessment Review
- [ ] Cable T.V. Committee
- [ ] Capital Projects Committee
- [ ] Conservation Commission
- [ ] Diversity, Equity and Inclusion Committee
- [ ] Downtown Development Commission
- [ ] Economic Improvement Commission
- [ ] Harbor Commission
- [ ] Historic Preservation Commission
- [ ] Planning Board
- [ ] Policy Committee
- [ ] Project Canopy Committee
- [ ] Recreation Commission
- [ ] Recycling & Solid Waste Management Commission
- [x] Shellfish Conservation Committee
- [ ] Wastewater Management Commission
- [ ] Zoning Board of Appeals
- [ ] Other:

CITY OF BIDDEFORD
Committee Application

Please list any prior experience serving on any Public Boards, Commissions or Committees (and approximate dates)

PRESIDENT - Amherst Jaycees, Amherst, MA 1984 - 1987
President - KAUAI COUNTY FORESTRY ASSOCIATION, ~~2015 - 2016~~ 2013 - 2016
President - BIDDEFORD Pool Community Club 2007 - 2012

Please list any other experience that may be pertinent to the Board or Committee in which you are requesting to serve on.

EXPERIENCED WITH PARLIMENTARY PROCEEDURES, Roberts R.O.O.

Please provide a brief statement describing your interest in serving the City of Biddeford.

Attach any additional information to this application and return it to the City Clerk's Office.